GROUP TAB LOCATOR

	Introduction
0	Lubrication & Maintenance
2	Suspension
3	Differential & Driveline
5	Brakes
6	Clutch
7	Cooling
8A	Audio/Video
8B	Chime/Buzzer
8E	Electronic Control Modules
8F	Engine Systems
8G	Heated Systems
8H	Horn
8I	Ignition Control
8J	Instrument Cluster
8L	Lamps
8M	Message Systems
8N	Power Systems
8O	Restraints
8P	Speed Control
8Q	Vehicle Theft Security
8R	Wipers/Washers
8T	Navigation/Telecommunication
8W	Wiring
9	Engine
11	Exhaust System
13	Frame & Bumpers
14	Fuel System
19	Steering
21	Transmission and Transfer Case
22	Tires/Wheels
23	Body
24	Heating & Air Conditioning
25	Emissions Control
	Component and System Index
Service Manual Comment Forms	(Rear of Manual)

INTRODUCTION

TABLE OF CONTENTS

page

FASTENER IDENTIFICATION
DESCRIPTION 1
FASTENER USAGE
DESCRIPTION
DESCRIPTION 4
DESCRIPTION 4
INTERNATIONAL SYMBOLS
DESCRIPTION 4
METRIC SYSTEM
DESCRIPTION 4
TORQUE REFERENCES
DESCRIPTION 6
VEHICLE EMISSION CONTROL INFORMATION (VECI) LABEL
DESCRIPTION 8
VEHICLE IDENTIFICATION NUMBER
DESCRIPTION 8
VEHICLE CERTIFICATION LABEL
DESCRIPTION 9

FASTENER IDENTIFICATION

DESCRIPTION

The SAE bolt strength grades range from grade 2 to grade 8. The higher the grade number, the greater the bolt strength. Identification is determined by the line marks on the top of each bolt head. The actual bolt strength grade corresponds to the number of line marks plus 2. The most commonly used metric bolt strength classes are 9.8 and 10.9. The metric strength class identification number is imprinted on the head of the bolt. The higher the class number, the greater the bolt strength. Some metric nuts are imprinted with a single-digit strength class on the nut face. Refer to the Fastener Identification and Fastener Strength Charts (Fig. 1).

BOLT MARKINGS AND TORQUES - METRIC

Bolt Markings	8.8/8.9		10.9		12.9	
Bolt Dia.	N·m	Ft. Lbs.	N·m	Ft. Lbs.	N·m	Ft. Lbs.
6	12	105*	14	120*	16	12
8	25	250*	32	23	38	28
10	54	40	60	45	74	55
12	95	70	108	80	135	100
14	155	115	175	130	216	160
16	243	180	324	210	324	240
* Inch Lbs.						

FASTENER IDENTIFICATION (Continued)

BOLT MARKINGS AND TORQUES - U. S. CUSTOMARY

Bolt Markings	Grade 5		Grade 8	
Bolt Dia.	N·m	Ft. Lbs	N·m	Ft. Lbs
1/4 - 20	10	95*	14	125*
1/4 - 28	10	95*	17	150*
5/16 - 18	22	200*	30	270*
5/16 - 24	26	240*	33	300*
3/8 - 16	40	30	55	40
3/8 - 24	47	35	60	45
7/16 - 14	68	50	88	65
7/16 - 20	74	55	95	70
1/2 - 13	101	75	135	100
1/2 -20	115	85	150	110
9/16 - 12	135	105	182	135
9/16 - 18	155	115	202	150
5/8 - 11	202	150	263	195
5/8 - 18	215	160	284	210
3/4 - 10	230	170	297	220
3/4 - 16	236	175	304	225
7/8 - 14	405	300	540	400
* Inch Lbs.				

FASTENER IDENTIFICATION (Continued)

HOW TO DETERMINE BOLT STRENGTH

	Mark	Class
Hexagon head bolt	Bolt head No. 4 — 5 — 6 — 7 — 8 — 9 — 10 — 11 —	4T 5T 6T 7T 8T 9T 10T 11T
	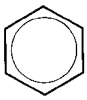 No mark	4T
Hexagon flange bolt w/washer hexagon bolt	No mark	4T
Hexagon head bolt	Two protruding lines	5T
Hexagon flange bolt w/washer hexagon bolt	Two protruding lines	6T
Hexagon head bolt	Three protruding lines	7T
Hexagon head bolt	Four protruding lines	8T

	Mark	Class
Stud bolt	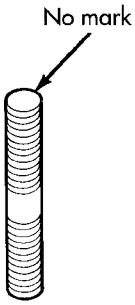 No mark	4T
	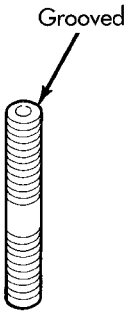 Grooved	6T
Welded bolt	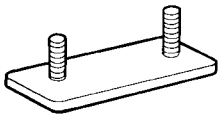	4T

95IN-4

Fig. 1 FASTENER STRENGTH

FASTENER USAGE

DESCRIPTION

DESCRIPTION

WARNING: Use of an incorrect fastener may result in component damage or personal injury.

Fasteners and torque specifications references in this Service Manual are identified in metric and SAE format.

During any maintenance or repair procedures, it is important to salvage all fasteners (nuts, bolts, etc.) for reassembly. If the fastener is not salvageable, a fastener of equivalent specification must be used.

DESCRIPTION

Most stripped threaded holes can be repaired using a Helicoil®. Follow the vehicle or Helicoil® recommendations for application and repair procedures.

INTERNATIONAL SYMBOLS

DESCRIPTION

The graphic symbols illustrated in (Fig. 2) and the following International Control and Display Symbols Chart are used to identify various instrument controls. The symbols correspond to the controls and displays that are located on the instrument panel.

METRIC SYSTEM

DESCRIPTION

The metric system is based on quantities of one, ten, one hundred, one thousand and one million.

The following chart (Fig. 3) will assist in converting metric units to equivalent English and SAE units, or vise versa.

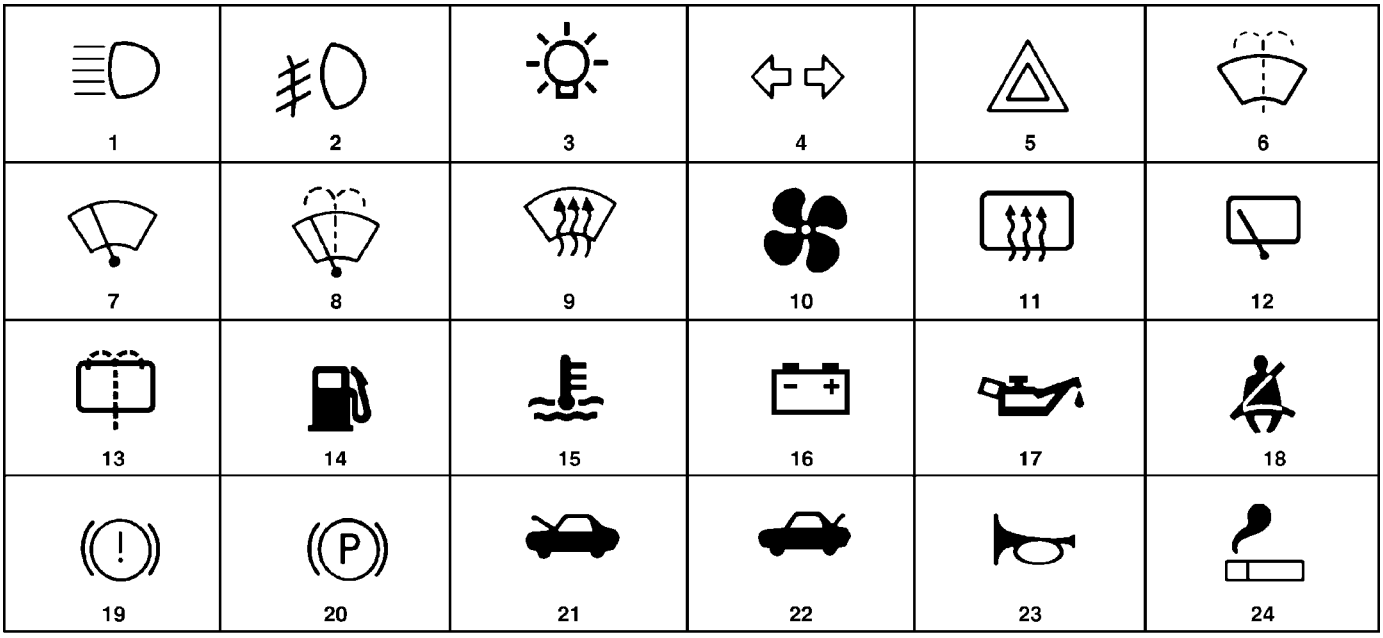

80be4788

Fig. 2 INTERNATIONAL CONTROL AND DISPLAY SYMBOLS

1	High Beam	13	Rear Window Washer
2	Fog Lamps	14	Fuel
3	Headlamp, Parking Lamps, Panel Lamps	15	Engine Coolant Temperature
4	Turn Warning	16	Battery Charging Condition
5	Hazard Warning	17	Engine Oil
6	Windshield Washer	18	Seat Belt
7	Windshield Wiper	19	Brake Failure
8	Windshield Wiper and Washer	20	Parking Brake
9	Windscreen Demisting and Defrosting	21	Front Hood
10	Ventilating Fan	22	Rear hood (Decklid)
11	Rear Window Defogger	23	Horn
12	Rear Window Wiper	24	Lighter

METRIC SYSTEM (Continued)

in-lbs to N•m

in- lb	N•m	in-lb	N•m	in-lb	N•m	in-lb	N•m	in-lb	N•m
2	.2260	42	4.7453	82	9.2646	122	13.7839	162	18.3032
4	.4519	44	4.9713	84	9.4906	124	14.0099	164	18.5292
6	.6779	46	5.1972	86	9.7165	126	14.2359	166	18.7552
8	.9039	48	5.4232	88	9.9425	128	14.4618	168	18.9811
10	1.1298	50	5.6492	90	10.1685	130	14.6878	170	19.2071
12	1.3558	52	5.8751	92	10.3944	132	14.9138	172	19.4331
14	1.5818	54	6.1011	94	10.6204	134	15.1397	174	19.6590
16	1.8077	56	6.3270	96	10.8464	136	15.3657	176	19.8850
18	2.0337	58	6.5530	98	11.0723	138	15.5917	178	20.1110
20	2.2597	60	6.7790	100	11.2983	140	15.8176	180	20.3369
22	2.4856	62	7.0049	102	11.5243	142	16.0436	182	20.5629
24	2.7116	64	7.2309	104	11.7502	144	16.2696	184	20.7889
26	2.9376	66	7.4569	106	11.9762	146	16.4955	186	21.0148
28	3.1635	68	7.6828	108	12.2022	148	16.7215	188	21.2408
30	3.3895	70	7.9088	110	12.4281	150	16.9475	190	21.4668
32	3.6155	72	8.1348	112	12.6541	152	17.1734	192	21.6927
34	3.8414	74	8.3607	114	12.8801	154	17.3994	194	21.9187
36	4.0674	76	8.5867	116	13.1060	156	17.6253	196	22.1447
38	4.2934	78	8.8127	118	13.3320	158	17.8513	198	22.3706
40	4.5193	80	9.0386	120	13.5580	160	18.0773	200	22.5966

N•m to in-lbs

N•m	in-lb	N•m	in-lb	N•m	in-lb	N•m	in-lb	N•m	in-lb
.2	1.7702	4.2	37.1747	8.2	72.5792	12.2	107.9837	16.2	143.3882
.4	3.5404	4.4	38.9449	8.4	74.3494	12.4	109.7539	16.4	145.1584
.6	5.3107	4.6	40.7152	8.6	76.1197	12.6	111.5242	16.6	146.9287
.8	7.0809	4.8	42.4854	8.8	77.8899	12.8	113.2944	16.8	148.6989
1	8.8511	5	44.2556	9	79.6601	13	115.0646	17	150.4691
1.2	10.6213	5.2	46.0258	9.2	81.4303	13.2	116.8348	17.2	152.2393
1.4	12.3916	5.4	47.7961	9.4	83.2006	13.4	118.6051	17.4	154.0096
1.6	14.1618	5.6	49.5663	9.6	84.9708	13.6	120.3753	17.6	155.7798
1.8	15.9320	5.8	51.3365	9.8	86.7410	13.8	122.1455	17.8	157.5500
2	17.7022	6	53.1067	10	88.5112	14	123.9157	18	159.3202
2.2	19.4725	6.2	54.8770	10.2	90.2815	14.2	125.6860	18.5	163.7458
2.4	21.2427	6.4	56.6472	10.4	92.0517	14.4	127.4562	19	168.1714
2.6	23.0129	6.6	58.4174	10.6	93.8219	14.6	129.2264	19.5	172.5970
2.8	24.7831	6.8	60.1876	10.8	95.5921	14.8	130.9966	20	177.0225
3	26.5534	7	61.9579	11	97.3624	15	132.7669	20.5	181.4480
3.2	28.3236	7.2	63.7281	11.2	99.1326	15.2	134.5371	21	185.8736
3.4	30.0938	7.4	65.4983	11.4	100.9028	15.4	136.3073	22	194.7247
3.6	31.8640	7.6	67.2685	11.6	102.6730	15.6	138.0775	23	203.5759
3.8	33.6342	7.8	69.0388	11.8	104.4433	15.8	139.8478	24	212.4270
4	35.4045	8	70.8090	12	106.2135	16	141.6180	25	221.2781

ft-lbs to N•m

ft-lb	N•m	ft-lb	N•m	ft-lb	N•m	ft-lb	N•m	ft-lb	N•m
1	1.3558	21	28.4722	41	55.5885	61	82.7049	81	109.8212
2	2.7116	22	29.8280	42	56.9444	62	84.0607	82	111.1770
3	4.0675	23	31.1838	43	58.3002	63	85.4165	83	112.5328
4	5.4233	24	32.5396	44	59.6560	64	86.7723	84	113.8888
5	6.7791	25	33.8954	45	61.0118	65	88.1281	85	115.2446
6	8.1349	26	35.2513	46	62.3676	66	89.4840	86	116.6004
7	9.4907	27	36.6071	47	63.7234	67	90.8398	87	117.9562
8	10.8465	28	37.9629	48	65.0793	68	92.1956	88	119.3120
9	12.2024	29	39.3187	49	66.4351	69	93.5514	89	120.6678
10	13.5582	30	40.6745	50	67.7909	70	94.9073	90	122.0236
11	14.9140	31	42.0304	51	69.1467	71	96.2631	91	123.3794
12	16.2698	32	43.3862	52	70.5025	72	97.6189	92	124.7352
13	17.6256	33	44.7420	53	71.8583	73	98.9747	93	126.0910
14	18.9815	34	46.0978	54	73.2142	74	100.3316	94	127.4468
15	20.3373	35	47.4536	55	74.5700	75	101.6862	95	128.8026
16	21.6931	36	48.8094	56	75.9258	76	103.0422	96	130.1586
17	23.0489	37	50.1653	57	77.2816	77	104.3980	97	131.5144
18	24.4047	38	51.5211	58	78.6374	78	105.7538	98	132.8702
19	25.7605	39	52.8769	59	79.9933	79	107.1196	99	134.2260
20	27.1164	40	54.2327	60	81.3491	80	108.4654	100	135.5820

N•m to ft-lbs

N•m	ft-lb	N•m	ft-lb	N•m	ft-lb	N•m	ft-lb	N•m	ft-lb
1	.7376	21	15.9888	41	30.2400	61	44.9913	81	59.7425
2	1.4751	22	16.2264	42	30.9776	62	45.7289	82	60.4801
3	2.2127	23	16.9639	43	31.7152	63	46.4664	83	61.2177
4	2.9502	24	17.7015	44	32.4527	64	47.2040	84	61.9552
5	3.6878	25	18.4391	45	33.1903	65	47.9415	85	62.6928
6	4.4254	26	19.1766	46	33.9279	66	48.6791	86	63.4303
7	5.1629	27	19.9142	47	34.6654	67	49.4167	87	64.1679
8	5.9005	28	20.6517	48	35.4030	68	50.1542	88	64.9545
9	6.6381	29	21.3893	49	36.1405	69	50.8918	89	65.6430
10	7.3756	30	22.1269	50	36.8781	70	51.6293	90	66.3806
11	8.1132	31	22.8644	51	37.6157	71	52.3669	91	67.1181
12	8.8507	32	23.6020	52	38.3532	72	53.1045	92	67.8557
13	9.5883	33	24.3395	53	39.0908	73	53.8420	93	68.5933
14	10.3259	34	25.0771	54	39.8284	74	54.5720	94	69.3308
15	11.0634	35	25.8147	55	40.5659	75	55.3172	95	70.0684
16	11.8010	36	26.5522	56	41.3035	76	56.0547	96	70.8060
17	12.5386	37	27.2898	57	42.0410	77	56.7923	97	71.5435
18	13.2761	38	28.0274	58	42.7786	78	57.5298	98	72.2811
19	14.0137	39	28.7649	59	43.5162	79	58.2674	99	73.0187
20	14.7512	40	29.5025	60	44.2537	80	59.0050	100	73.7562

in. to mm

in.	mm	in.	mm	in.	mm	in.	mm	in.	mm
.01	.254	.21	5.334	.41	10.414	.61	15.494	.81	20.574
.02	.508	.22	5.588	.42	10.668	.62	15.748	.82	20.828
.03	.762	.23	5.842	.43	10.922	.63	16.002	.83	21.082
.04	1.016	.24	6.096	.44	11.176	.64	16.256	.84	21.336
.05	1.270	.25	6.350	.45	11.430	.65	16.510	.85	21.590
.06	1.524	.26	6.604	.46	11.684	.66	16.764	.86	21.844
.07	1.778	.27	6.858	.47	11.938	.67	17.018	.87	22.098
.08	2.032	.28	7.112	.48	12.192	.68	17.272	.88	22.352
.09	2.286	.29	7.366	.49	12.446	.69	17.526	.89	22.606
.10	2.540	.30	7.620	.50	12.700	.70	17.780	.90	22.860
.11	2.794	.31	7.874	.51	12.954	.71	18.034	.91	23.114
.12	3.048	.32	8.128	.52	13.208	.72	18.288	.92	23.368
.13	3.302	.33	8.382	.53	13.462	.73	18.542	.93	23.622
.14	3.556	.34	8.636	.54	13.716	.74	18.796	.94	23.876
.15	3.810	.35	8.890	.55	13.970	.75	19.050	.95	24.130
.16	4.064	.36	9.144	.56	14.224	.76	19.304	.96	24.384
.17	3.318	.37	9.398	.57	14.478	.77	19.558	.97	24.638
.18	4.572	.38	9.652	.58	14.732	.78	19.812	.98	24.892
.19	4.826	.39	9.906	.59	14.986	.79	20.066	.99	25.146
.20	5.080	.40	10.160	.60	15.240	.80	20.320	1.00	25.400

mm to in.

mm	in.	mm	in.	mm	in.	mm	in.	mm	in.
.01	.00039	.21	.00827	.41	.01614	.61	.02402	.81	.03189
.02	.00079	.22	.00866	.42	.01654	.62	.02441	.82	.03228
.03	.00118	.23	.00906	.43	.01693	.63	.02480	.83	.03268
.04	.00157	.24	.00945	.44	.01732	.64	.02520	.84	.03307
.05	.00197	.25	.00984	.45	.01772	.65	.02559	.85	.03346
.06	.00236	.26	.01024	.46	.01811	.66	.02598	.86	.03386
.07	.00276	.27	.01063	.47	.01850	.67	.02638	.87	.03425
.08	.00315	.28	.01102	.48	.01890	.68	.02677	.88	.03465
.09	.00354	.29	.01142	.49	.01929	.69	.02717	.89	.03504
.10	.00394	.30	.01181	.50	.01969	.70	.02756	.90	.03543
.11	.00433	.31	.01220	.51	.02008	.71	.02795	.91	.03583
.12	.00472	.32	.01260	.52	.02047	.72	.02835	.92	.03622
.13	.00512	.33	.01299	.53	.02087	.73	.02874	.93	.03661
.14	.00551	.34	.01339	.54	.02126	.74	.02913	.94	.03701
.15	.00591	.35	.01378	.55	.02165	.75	.02953	.95	.03740
.16	.00630	.36	.01417	.56	.02205	.76	.02992	.96	.03780
.17	.00669	.37	.01457	.57	.02244	.77	.03032	.97	.03819
.18	.00709	.38	.01496	.58	.02283	.78	.03071	.98	.03858
.19	.00748	.39	.01535	.59	.02323	.79	.03110	.99	.03898
.20	.00787	.40	.01575	.60	.02362	.80	.03150	1.00	.03937

J901N-10

Fig. 3 METRIC CONVERSION CHART

METRIC SYSTEM (Continued)

CONVERSION FORMULAS AND EQUIVALENT VALUES

MULTIPLY	BY	TO GET	MULTIPLY	BY	TO GET
in-lbs	x 0.11298	= Newton Meters (N·m)	N·m	x 8.851	= in-lbs
ft-lbs	x 1.3558	= Newton Meters (N·m)	N·m	x 0.7376	= ft-lbs
Inches Hg (60° F)	x 3.377	= Kilopascals (kPa)	kPa	x 0.2961	= Inches Hg
psi	x 6.895	= Kilopascals (kPa)	kPa	x 0.145	= psi
Inches	x 25.4	= Millimeters (mm)	mm	x 0.03937	= Inches
Feet	x 0.3048	= Meters (M)	M	x 3.281	= Feet
Yards	x 0.9144	= Meters	M	x 1.0936	= Yards
mph	x 1.6093	= Kilometers/Hr. (Km/h)	Km/h	x 0.6214	= mph
Feet/Sec	x 0.3048	= Meters/Sec (M/S)	M/S	x 3.281	= Feet/Sec
mph	x 0.4470	= Meters/Sec (M/S)	M/S	x 2.237	= mph
Kilometers/Hr. (Km/h)	x 0.27778	= Meters/Sec (M/S)	M/S	x 3.600	Kilometers/Hr. (Km/h)

COMMON METRIC EQUIVALENTS

1 inch = 25 Millimeters	1 Cubic Inch = 16 Cubic Centimeters
1 Foot = 0.3 Meter	1 Cubic Foot = 0.03 Cubic Meter
1 Yard = 0.9 Meter	1 Cubic Yard = 0.8 Cubic Meter
1 Mile = 1.6 Kilometers	

Refer to the Metric Conversion Chart (Fig. 3) to convert torque values listed in metric Newton-meters (N·m). Also, use the chart to convert between millimeters (mm) and inches (in.).

TORQUE REFERENCES

DESCRIPTION

Individual Torque Charts appear within many or the Groups. Refer to the Standard Torque Specifications Chart (Fig. 4) for torque references not listed in the individual torque charts.

TORQUE REFERENCES (Continued)

SPECIFIED TORQUE FOR STANDARD BOLTS

Class	Diameter mm	Pitch mm	Specified torque					
			Hexagon head bolt			Hexagon flange bolt		
			N•m	kgf-cm	ft-lbf	N•m	kgf-cm	ft-lbf
4T	6	1	5	55	48 in.-lbf	6	60	52 in.-lbf
	8	1.25	12.5	130	9	14	145	10
	10	1.25	26	260	19	29	290	21
	12	1.25	47	480	35	53	540	39
	14	1.5	74	760	55	84	850	61
	16	1.5	115	1,150	83	—	—	—
5T	6	1	6.5	65	56 in.-lbf	7.5	75	65 in.-lbf
	8	1.25	15.5	160	12	17.5	175	13
	10	1.25	32	330	24	36	360	26
	12	1.25	59	600	43	65	670	48
	14	1.5	91	930	67	100	1,050	76
	16	1.5	140	1,400	101	—	—	—
6T	6	1	8	80	69 in.-lbf	9	90	78 in.-lbf
	8	1.25	19	195	14	21	210	15
	10	1.25	39	400	29	44	440	32
	12	1.25	71	730	53	80	810	59
	14	1.5	110	1,100	80	125	1,250	90
	16	1.5	170	1,750	127	—	—	—
7T	6	1	10.5	110	8	12	120	9
	8	1.25	25	260	19	28	290	21
	10	1.25	52	530	38	58	590	43
	12	1.25	95	970	70	105	1,050	76
	14	1.5	145	1,500	108	165	1,700	123
	16	1.5	230	2,300	166	—	—	—
8T	8	1.25	29	300	22	33	330	24
	10	1.25	61	620	45	68	690	50
	12	1.25	110	1,100	80	120	1,250	90
9T	8	1.25	34	340	25	37	380	27
	10	1.25	70	710	51	78	790	57
	12	1.25	125	1,300	94	140	1,450	105
10T	8	1.25	38	390	28	42	430	31
	10	1.25	78	800	58	88	890	64
	12	1.25	140	1,450	105	155	1,600	116
11T	8	1.25	42	430	31	47	480	35
	10	1.25	87	890	64	97	990	72
	12	1.25	155	1,600	116	175	1,800	130

Fig. 4 TORQUE SPECIFICATIONS

VEHICLE EMISSION CONTROL INFORMATION (VECI) LABEL

DESCRIPTION

All models have a Vehicle Emission Control Information (VECI) Label. DaimlerChrysler permanently attaches the label in the engine compartment (Fig. 5). The label cannot be removed without defacing label information and destroying label.

The label contains the vehicle's emission specifications and vacuum hose routings. All hoses must be connected and routed according to the label.

The label also contains an engine vacuum schematic. There are unique labels for vehicles built for sale in the state of California and the country of Canada. Canadian labels are written in both the English and French languages.

The VECI label contains the following:

- Engine family and displacement
- Evaporative family
- Emission control system schematic
- Certification application
- Engine timing specifications (if adjustable)
- Idle speeds (if adjustable)
- Spark plug and gap

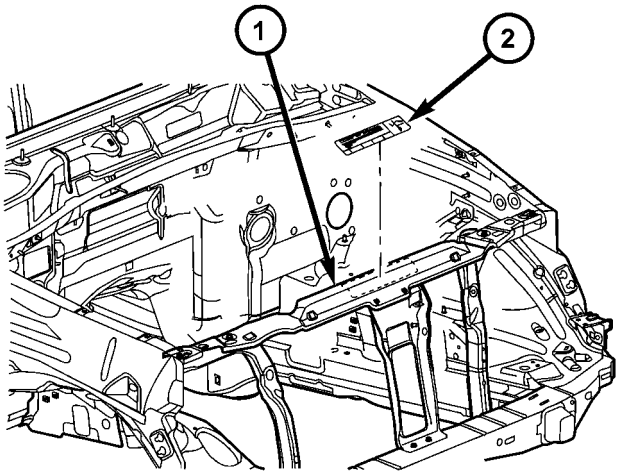

Fig. 5 VECI LABEL LOCATION

1 - RADIATOR SUPPORT
2 - VECI LABEL

VEHICLE IDENTIFICATION NUMBER

DESCRIPTION

The Vehicle Identification Number (VIN) plate is located on the lower left A-pillar and is visible through the windshield (Fig. 6). The VIN contains 17 characters that provide data concerning the vehicle. Refer to the VIN decoding chart to determine the identification of a vehicle.

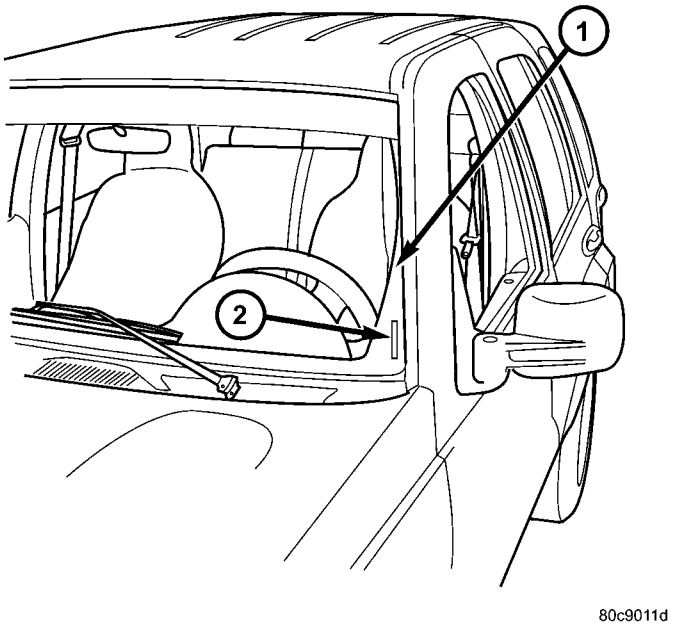

Fig. 6 VIN NUMBER LOCATION

1 - A-PILLAR
2 - VIN CODE PLATE

The Vehicle Identification Number is also imprinted on the:

- Vehicle Safety Certification Label.
- Frame rail.

To protect the consumer from theft and possible fraud the manufacturer is required to include a Check Digit at the ninth position of the Vehicle Identification Number. The check digit is used by the manufacturer and government agencies to verify the authenticity of the vehicle and official documentation. The formula to use the check digit is not released to the general public.

VEHICLE IDENTIFICATION NUMBER (Continued)

VEHICLE IDENTIFICATION NUMBER DECODING CHART

POSITION	INTERPRETATION	CODE = DESCRIPTION
1	Country of Origin	1 = Manufactured by DaimlerChrysler Corporation
2	Make	J = Jeep
3	Vehicle Type	4 = MPV W/O Side Airbags. 8 = MPV With Side Airbags.
4	Gross Vehicle Weight Rating	F = 4001 - 5000 lbs. G = 5001 - 6000 lbs.
5	Vehicle Line	K = Liberty 4X2 (LHD) L = Liberty 4X4 (LHD) wihtout ABB M = Cherokee 4X4 (RHD) 6 = Cherokee (LHD) with ABB
6	Series	3 = Liberty/Renegade 4 = Liberty Sport/Cherokee Sport 5 = Liberty Limited/Cherokee Limited
7	Body Style	8 = Sport Utility - 4 Door
8	Engine	K = 3.7L 6 cyl MPI Gasoline 1 = 2.4L 4 cyl MPI Gasoline 5 = 2.8L 4 cyl Diesel
9	Check Digit	0 through 9 or X
10	Model Year	5=2005
11	Assembly Plant	W = Toledo North Assembly Plant
12 thru 17	Vehicle Build Sequence	

VEHICLE CERTIFICATION LABEL

DESCRIPTION

A vehicle certification label (Fig. 7) is attached to every DaimlerChrysler Corporation vehicle. The label certifies that the vehicle conforms to all applicable Federal Motor Vehicle Standards. The label also lists:

- Month and year of vehicle manufacture.
- Gross Vehicle Weight Rating (GVWR). The gross front and rear axle weight ratings (GAWR's) are based on a minimum rim size and maximum cold tire inflation pressure.
- Vehicle Identification Number (VIN).
- Type of vehicle.
- Type of rear wheels.
- Bar code.
- Month, Day and Hour (MDH) of final assembly.
- Paint and Trim codes.
- Country of origin.

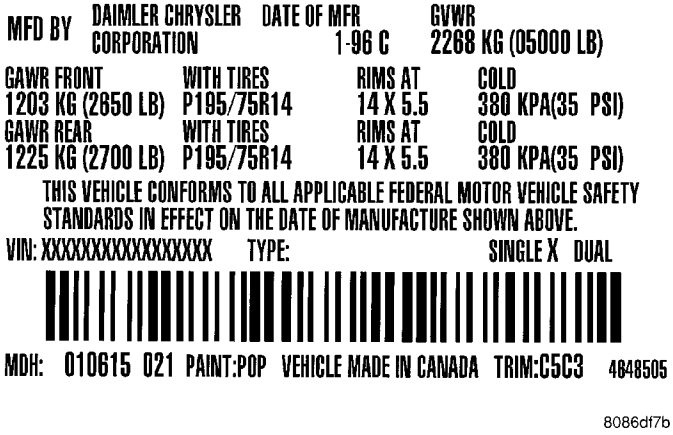

8086df7b

Fig. 7 VEHICLE CERTIFICATION LABEL - TYPICAL

The label is located on the driver-side door shut-face.

LUBRICATION & MAINTENANCE

TABLE OF CONTENTS

page

INTERNATIONAL SYMBOLS
DESCRIPTION 1
PARTS & LUBRICANT RECOMMENDATION
DESCRIPTION
LUBRICANT RECOMMENDATIONS 1
FLUID TYPES 2
FLUID TYPES
DESCRIPTION
ENGINE OIL 2
ENGINE OIL - DIESEL ENGINES 3
ENGINE OIL - DIESEL ENGINES - EXPORT . . 3
AXLE 3
MANUAL TRANSMISSION 3
AUTOMATIC TRANSMISSION FLUID 3
TRANSFER CASE - NV231 4
TRANSFER CASE - NV241 GENII 4
TRANSFER CASE - NV242 4
ENGINE COOLANT 4
POWER STEERING FLUID 5
OPERATION - AUTOMATIC TRANSMISSION FLUID 5
FLUID CAPACITIES
SPECIFICATIONS - FLUID CAPACITIES 5

page

MAINTENANCE SCHEDULES
DESCRIPTION
MAINTENANCE SCHEDULES - GASOLINE ENGINES 6
MAINTENANCE SCHEDULES - DIESEL ENGINE 12
MAINTENANCE SCHEDULES - GASOLINE ENGINES - EXPORT 14
DESCRIPTION – DIESEL ENGINES – EXPORT SCHEDULES 19
FLUID FILL/CHECK LOCATIONS
DESCRIPTION 23
HOISTING
STANDARD PROCEDURE - HOISTING RECOMMENDATIONS 23
JUMP STARTING
STANDARD PROCEDURE - JUMP STARTING PROCEDURE 23
TOWING
STANDARD PROCEDURE - TOWING 24

INTERNATIONAL SYMBOLS

DESCRIPTION

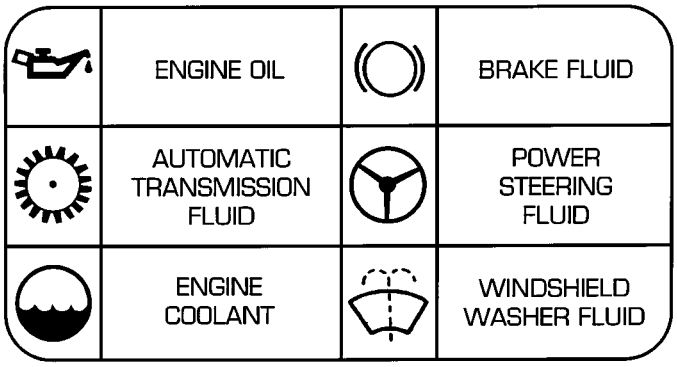

Fig. 1 INTERNATIONAL SYMBOLS

DaimlerChrysler Corporation uses international symbols (Fig. 1) to identify engine compartment lubricant and fluid inspection and fill locations.

PARTS & LUBRICANT RECOMMENDATION

DESCRIPTION

LUBRICANT RECOMMENDATIONS

Chassis

Component	Fluid, Lubricant, or Genuine Part
Steering Gear & Linkage, Ball Joints, Prop Shafts & Yokes, Wheel Bearings	Mopar® Multi-Purpose Lubricant NLGI Grade 2 EP, GC-LB

PARTS & LUBRICANT RECOMMENDATION (Continued)

Body

Component	Fluid, Lubricant, and Genuine Part
Hinges:	
Door & Hood	Mopar® Engine Oil
Swing Gate	Mopar® Multi-Purpose Lube NLGI Grade 2 EP, GC-LB
Latches: Door, Hood/Safety Catch, Swing Gate	Mopar® Multi-Purpose Lube NLGI Grade 2 EP, GC-LB
Seat Regulator & Track	Mopar® Multi-Purpose Lube NLGI Grade 2 EP, GC-LB
Lock Cylinders	Mopar® Lock Cylinder Lube

FLUID TYPES

When service is required, DaimlerChrysler Corporation recommends that only Mopar® brand parts, lubricants and chemicals be used. Mopar® provides the best engineered products for servicing DaimlerChrysler Corporation vehicles.

Only lubricants bearing designations defined by the following organization should be used to service a Chrysler Corporation vehicle.

- Society of Automotive Engineers (SAE)
- American Petroleum Institute (API) (Fig. 2)
- National Lubricating Grease Institute (NLGI)

API QUALITY CLASSIFICATION

9400-9

Fig. 2 API Symbol

This symbol on the front of an oil container means that the oil has been certified by the American Petroleum Institute (API) to meet all the lubrication requirements specified by DaimlerChrysler Corporation.

GEAR LUBRICANTS

SAE ratings also apply to multigrade gear lubricants. In addition, API classification defines the lubricants usage. Such as API GL-5 and SAE 75W-90.

FLUID TYPES

DESCRIPTION

ENGINE OIL

WARNING: NEW OR USED ENGINE OIL CAN BE IRRITATING TO THE SKIN. AVOID PROLONGED OR REPEATED SKIN CONTACT WITH ENGINE OIL. CONTAMINANTS IN USED ENGINE OIL, CAUSED BY INTERNAL COMBUSTION, CAN BE HAZARDOUS TO YOUR HEALTH. THOROUGHLY WASH EXPOSED SKIN WITH SOAP AND WATER. DO NOT WASH SKIN WITH GASOLINE, DIESEL FUEL, THINNER, OR SOLVENTS, HEALTH PROBLEMS CAN RESULT. DO NOT POLLUTE, DISPOSE OF USED ENGINE OIL PROPERLY. CONTACT YOUR DEALER OR GOVERNMENT AGENCY FOR LOCATION OF COLLECTION CENTER IN YOUR AREA.

Only lubricants bearing designations defined by the following organization should be used.

- Society of Automotive Engineers (SAE)
- American Petroleum Institute (API)
- National Lubricating Grease Institute (NLGI)
- Association des Constructeurs Européens d' Automobiles (European Automobile Manufacturers Association) (ACEA)

API SERVICE GRADE CERTIFIED

Use an engine oil that is API Certified. MOPAR® provides engine oils, that meet or exceed this requirement.

SAE VISCOSITY

An SAE viscosity grade is used to specify the viscosity of engine oil. Use only engine oils with multiple viscosities such as 5W-30 or 10W-30. These are specified with a dual SAE viscosity grade which indicates the cold-to-hot temperature viscosity range. Select an engine oil that is best suited to your particular temperature range and variation (Fig. 3).

ACEA Categories

For countries that use the ACEA European Oil Categories for Service Fill Oils, use engine oils that meet the requirements of ACEA A1/B1, A2/B2, or A3/B3.

ENERGY CONSERVING OIL

An Energy Conserving type oil is recommended for gasoline engines. The designation of ENERGY CONSERVING is located on the label of an engine oil container.

FLUID TYPES (Continued)

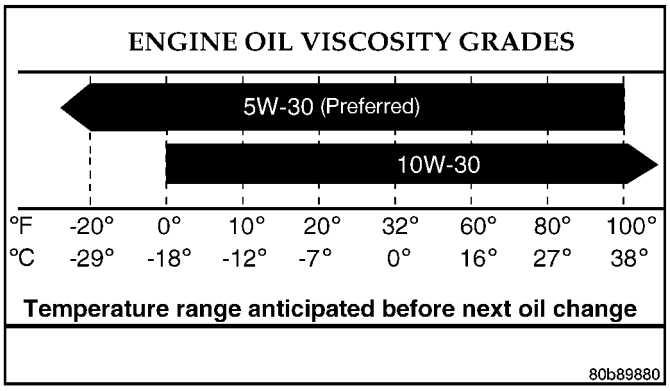

Fig. 3 Temperature/Engine Oil Viscosity

CONTAINER IDENTIFICATION

Standard engine oil identification notations have been adopted to aid in the proper selection of engine oil. The identifying notations are located on the front label of engine oil plastic bottles and the top of engine oil cans (Fig. 4).

This symbol means that the oil has been certified by the American Petroleum Institute (API). DaimlerChrysler only recommend API Certified engine oils. Use Mopar® engine oil or equivalent.

9400-9

Fig. 4 API Certification Mark

ENGINE OIL - DIESEL ENGINES

Only use synthetic engine oils meeting the API Categories SL/CF and Chrysler Material Standard MS-10725. Those engine oils not meeting the viscosity and API Quality and MS-10725 requirements should not be used.

SAE VISCOSITY GRADE

The preferred engine oil is SAE 0W-40 Mobil® One Synthetic. If you can not locate SAE 0W-40 Mobil® One Synthetic, then SAE 5W-40 Mobil® One Synthetic would be acceptable.

ENGINE OIL - DIESEL ENGINES - EXPORT

Use only Diesel Engine Oil meeting standard **MIL-2104C** or API Classification **CD or higher** or **CCML D4, D5**.

SAE VISCOSITY GRADE

CAUTION: Low viscosity oils must have the proper API quality or the CCMC G5 designation.

To assure of properly formulated engine oils, it is recommended that SAE Grade 10W-40 engine oils that meet Chrysler material standard MS-6395, be used in accordance to ACEA B3, B4 specification. European Grade 10W-40 oils are also acceptable.

Oils of the SAE 5W-40 grade number are preferred when minimum temperatures consistently fall below -15°C.

AXLE

NOTE: DaimlerChrysler recommends using Mopar® lubricants or lubricants of equal quality.

FRONT AXLE

- 186FIA (Model 30) - Mopar® Lubricant 80W-90

REAR AXLE

- 8 1/4 - Mopar® Gear Lubricant 75W-90 (Trailer Towing - Mopar® Synthentic Gear Lubricant 75W-140

NOTE: Trac-lok® equipped axles require 118 ml (4 ounces) of Limited Slip Additive be added to the lubricant.

MANUAL TRANSMISSION

NOTE: DaimlerChrysler recommends using Mopar® lubricants or lubricants of equal quality.

- NSG370 - Mopar® Manual Transmission Lubricant MS-9224

AUTOMATIC TRANSMISSION FLUID

NOTE: Refer to Service Procedures in this group for fluid level checking procedures.

Mopar® ATF +4, Automatic Transmission Fluid is the recommended fluid for DaimlerChrysler automatic transmissions.

Dexron II fluid IS NOT recommended. Clutch chatter can result from the use of improper fluid.

Mopar® ATF +4, Automatic Transmission Fluid when new is red in color. The ATF is dyed red so it can be identified from other fluids used in the vehicle such as engine oil or antifreeze. The red color is not permanent and is not an indicator of fluid condition. As the vehicle is driven, the ATF will begin to look darker in color and may eventually become brown.

FLUID TYPES (Continued)

This is normal. ATF+4 also has a unique odor that may change with age. Consequently, odor and color cannot be used to indicate the fluid condition or the need for a fluid change.

FLUID ADDITIVES

DaimlerChrysler strongly recommends against the addition of any fluids to the transmission, other than those automatic transmission fluids listed above. Exceptions to this policy are the use of special dyes to aid in detecting fluid leaks.

Various "special" additives and supplements exist that claim to improve shift feel and/or quality. These additives and others also claim to improve converter clutch operation and inhibit overheating, oxidation, varnish, and sludge. These claims have not been supported to the satisfaction of DaimlerChrysler and these additives **must not be used.** The use of transmission "sealers" should also be avoided, since they may adversely affect the integrity of transmission seals.

TRANSFER CASE - NV231

Recommended lubricant for the NV231 transfer case is Mopar® ATF +4, Automatic Transmission Fluid.

TRANSFER CASE - NV241 GENII

Recommended lubricant for the NV2421 GENII transfer case is Mopar® ATF+4, Automatic Transmission Fluid.

TRANSFER CASE - NV242

Recommended lubricant for the NV242 transfer case is Mopar® ATF+4, Automatic Transmission Fluid.

ENGINE COOLANT

WARNING: ANTIFREEZE IS AN ETHYLENE GLYCOL BASE COOLANT AND IS HARMFUL IF SWALLOWED OR INHALED. IF SWALLOWED, DRINK TWO GLASSES OF WATER AND INDUCE VOMITING. IF INHALED, MOVE TO FRESH AIR AREA. SEEK MEDICAL ATTENTION IMMEDIATELY. DO NOT STORE IN OPEN OR UNMARKED CONTAINERS. WASH SKIN AND CLOTHING THOROUGHLY AFTER COMING IN CONTACT WITH ETHYLENE GLYCOL. KEEP OUT OF REACH OF CHILDREN. DISPOSE OF GLYCOL BASE COOLANT PROPERLY, CONTACT YOUR DEALER OR GOVERNMENT AGENCY FOR LOCATION OF COLLECTION CENTER IN YOUR AREA. DO NOT OPEN A COOLING SYSTEM WHEN THE ENGINE IS AT OPERATING TEMPERATURE OR HOT UNDER PRESSURE, PERSONAL INJURY CAN RESULT. AVOID RADIATOR COOLING FAN WHEN ENGINE COMPARTMENT RELATED SERVICE IS PERFORMED, PERSONAL INJURY CAN RESULT.

CAUTION: Use of Propylene Glycol based coolants is not recommended, as they provide less freeze protection and less corrosion protection.

The cooling system is designed around the coolant. The coolant must accept heat from engine metal, in the cylinder head area near the exhaust valves and engine block. Then coolant carries the heat to the radiator where the tube/fin radiator can transfer the heat to the air.

The use of aluminum cylinder blocks, cylinder heads, and water pumps requires special corrosion protection. Mopar® Antifreeze/Coolant, 5 Year/100,000 Mile Formula (MS-9769), or the equivalent ethylene glycol base coolant with organic corrosion inhibitors (called HOAT, for Hybrid Organic Additive Technology) is recommended. This coolant offers the best engine cooling without corrosion when mixed with 50% Ethylene Glycol and 50% distilled water to obtain a freeze point of -37°C (-35°F). If it loses color or becomes contaminated, drain, flush, and replace with fresh properly mixed coolant solution.

CAUTION: Mopar® Antifreeze/Coolant, 5 Year/100,000 Mile Formula (MS-9769) may not be mixed with any other type of antifreeze. Mixing of coolants other than specified (non-HOAT or other HOAT), may result in engine damage that may not be covered under the new vehicle warranty, and decreased corrosion protection.

COOLANT PERFORMANCE

The required ethylene-glycol (antifreeze) and water mixture depends upon climate and vehicle operating conditions. The coolant performance of various mixtures follows:

Pure Water-Water can absorb more heat than a mixture of water and ethylene-glycol. This is for purpose of heat transfer only. Water also freezes at a higher temperature and allows corrosion.

100 percent Ethylene-Glycol-The corrosion inhibiting additives in ethylene-glycol need the presence of water to dissolve. Without water, additives form deposits in system. These act as insulation causing temperature to rise to as high as 149°C (300°F). This temperature is hot enough to melt plastic and soften solder. The increased temperature can result in engine detonation. In addition, 100 percent ethylene-glycol freezes at -22°C (-8°F).

50/50 Ethylene-Glycol and Water-Is the recommended mixture, it provides protection against freezing to -37°C (-34°F). The antifreeze concentration

FLUID TYPES (Continued)

must always be a minimum of 44 percent, year-round in all climates. If percentage is lower, engine parts may be eroded by cavitation. Maximum protection against freezing is provided with a 68 percent antifreeze concentration, which prevents freezing down to -67.7°C (-90°F). A higher percentage will freeze at a warmer temperature. Also, a higher percentage of antifreeze can cause the engine to overheat because specific heat of antifreeze is lower than that of water.

CAUTION: Richer antifreeze mixtures cannot be measured with normal field equipment and can cause problems associated with 100 percent ethylene-glycol.

CAUTION: Do not use coolant additives that are claimed to improve engine cooling.

POWER STEERING FLUID

Mopar® ATF +4, Automatic Transmission Fluid is required in the power steering system. Substitute fluids can induce power steering system failure.

Mopar® ATF +4, Automatic Transmission Fluid when new is red in color. The ATF is dyed red so it can be identified from other fluids used in the vehicle such as engine oil or antifreeze. The red color is not permanent and is not an indicator of fluid condition. As the vehicle is driven, the ATF will begin to look darker in color and may eventually become brown. **This is normal.** ATF+4 also has a unique odor that may change with age. Consequently, odor and color cannot be used to indicate the fluid condition or the need for a fluid change.

OPERATION - AUTOMATIC TRANSMISSION FLUID

The automatic transmission fluid is selected based upon several qualities. The fluid must provide a high level of protection for the internal components by providing a lubricating film between adjacent metal components. The fluid must also be thermally stable so that it can maintain a consistent viscosity through a large temperature range. If the viscosity stays constant through the temperature range of operation, transmission operation and shift feel will remain consistent. Transmission fluid must also be a good conductor of heat. The fluid must absorb heat from the internal transmission components and transfer that heat to the transmission case.

FLUID CAPACITIES

SPECIFICATIONS - FLUID CAPACITIES

DESCRIPTION	SPECIFICATION
FUEL TANK – Gasoline & Diesel	19.5 U.S. Gallons (74L)*
ENGINE OIL	
2.4L with Filter	4.7L (5.0 qts.)
3.7L with Filter	4.7L (5.0 qts.)
2.8L Diesel with Filter	6.1L (6.4 qts.)
ENGINE COOLANT	
Cooling System - 2.4L	9.5L (10.0 qts.)
Cooling System - 3.7L	13.2L (14.0 qts.)
Cooling System-2.8L Diesel	12.5 L (11.8 qts.)
POWER STEERING SYSTEM	
Power steering fluid capacities are dependent on engine/chassis options as well as steering gear/ cooler options. Depending on type and size of internal cooler, length and inside diameter of cooler lines, or use of an auxiliary cooler, these capacities may vary. Refer to 19, Steering for proper fill and bleed procedures.	
AUTOMATIC TRANSMISSION	
Service Fill - 545RFE	4.73L (10.0 pts)
O-haul Fill - 545RFE	13.33L (28.0 pts)
Service Fill - 42RLE	3.8L (8.0 pts)
O-haul Fill - 42RLE	8.3L (17.6 pts)
Dry fill capacity depending on type and size of internal cooler, length and inside diameter of cooler lines, or use of an auxiliary cooler, these figures may vary. (Refer to 21 - TRANSMISSION/AUTOMATIC/FLUID - STANDARD PROCEDURE)	
TRANSFER CASE	
NV231	1.4L (2.95 pts.)
NV241 GENII	2.0L (4.2 pts.)
NV242	1.6L (3.4 pts.)
MANUAL TRANSMISSION	
NSG370 (Approximate dry fill or fill to bottom edge of the fill plug hole.)	1.5L (3.17 pts.)
FRONT AXLE	
186 FIA (Model 30)	1.24L (2.6 pts.)
REAR AXLE	
8 1/4	2.08L (4.4 pts.)**
*Nominal refill capacities are shown. A variation may be observed from vehicle to vehicle due to manufacturing tolerance and refill procedure.	
** When equipped with Trac-lok, include 118 ml (4.0 ounces) of Limited Slip Additive.	

MAINTENANCE SCHEDULES

DESCRIPTION

MAINTENANCE SCHEDULES - GASOLINE ENGINES

There are two maintenance schedules that show the **required** service for your vehicle.

First is Schedule ″**B**″. It is for vehicles that are operated under the conditions that are listed below and at the beginning of the schedule.

- Day or night temperatures are below 32°F (0°C).
- Stop and go driving.
- Extensive engine idling.
- Driving in dusty conditions.
- Short trips of less than 10 miles (16.2 km).
- More than 50% of your driving is at sustained high speeds during hot weather, above 90°F (32°C).
- Trailer towing.
- Taxi, police, or delivery service (commercial service).
- Off-road or desert driving.
- If equipped for and operated with E-85 (ethanol) fuel.

NOTE: If ANY of these apply to you then change your engine oil every 3,000 miles (5 000 km) or 3 months, whichever comes first and follow "Schedule B" of the "Maintenance Schedules" section of this manual.

NOTE: If ANY of these apply to you then flush and replace your engine coolant/anti-freeze every 102,000 miles (163 000 km) or 60 months, whichever comes first, and follow "Schedule B" of the "Maintenance Schedules" section of this manual.

NOTE: Most vehicles are operated under the conditions listed for Schedule "B."

Second is Schedule **"A"**. It is for vehicles that are not operated under any of the conditions listed under Schedule "B."

Use the schedule that best describes your driving conditions. Where time and mileage are listed, follow the interval that occurs first.

CAUTION: Failure to perform the required maintenance items may result in damage to the vehicle.

At Each Stop for Fuel

- Check the engine oil level about 5 minutes after a fully warmed engine is shut off. Checking the oil level while the vehicle is on level ground will improve the accuracy of the oil level reading. Add oil only when the level is at or below the ADD or MIN mark.
- Check the windshield washer solvent, add as required.

Once a Month

- Check the tire pressure and look for unusual wear or damage.
- Inspect the battery, and clean and tighten the terminals as required.
- Check the fluid levels of the engine coolant/anti-freeze reservoir, brake master cylinder, and transmission, and add as needed.
- Check all lights and all other electrical items for correct operation.

At Each Oil Change

- Change the engine oil filter.
- Inspect the exhaust system.
- Inspect brake hoses.
- Check the engine coolant/anti-freeze level, hoses, and clamps.
- Inspect manual transmission fluid level — if equipped.
- After completion of off-road operation, the underside of the vehicle should be thoroughly inspected. Examine threaded fasteners for looseness.

Schedule "B"

Follow schedule "B" if you usually operate your vehicle under one or more of the following conditions.

- Day or night temperatures are below 32°F (0°C).
- Stop and go driving.
- Extensive engine idling.
- Driving in dusty conditions.
- Short trips of less than 10 miles (16.2 km).
- More than 50% of your driving is at sustained high speeds during hot weather, above 90°F (32°C).
- Trailer towing.
- Taxi, police, or delivery service (commercial service).
- Off-road or desert driving.
- If equipped for and operated with E-85 (ethanol) fuel.

NOTE: If ANY of these apply to you then change your engine oil every 3,000 miles (5 000 km) or 3 months, whichever comes first and follow "Schedule B" of the "Maintenance Schedules" section of this manual.

NOTE: If ANY of these apply to you then flush and replace your engine coolant/anti-freeze every 102,000 miles (163 000 km) or 60 months, whichever comes first, and follow "Schedule B" of the "Maintenance Schedules" section of this manual.

MAINTENANCE SCHEDULES (Continued)

Miles (Kilometers)	**3,000 (5 000)**	**6,000 (10 000)**	**9,000 (14 000)**	**12,000 (19 000)**	**15,000 (24 000)**
Change the engine oil and engine oil filter, if not replaced at 3 months.	X	X	X	X	X
Rotate the tires.		X		X	
Inspect the engine air filter element, replace if necessary.					X
Inspect the brake linings.				X	
Drain and refill the front and rear axle fluid‡				X	

Miles (Kilometers)	**18,000 (29 000)**	**21,000 (34 000)**	**24,000 (38 000)**	**27,000 (43 000)**	**30,000 (48 000)**
Change the engine oil and engine oil filter, if not replaced at 3 months.	X	X	X	X	X
Rotate the tires.	X		X		X
Inspect the engine air filter element, replace if necessary.					X
Replace the spark plugs.					X
Inspect and replace the PCV valve, if necessary. ◊					X
Inspect the brake linings.			X		
Drain and refill the front and rear axle fluid‡			X		
Inspect the transfer case fluid, add if necessary.					X

Miles (Kilometers)	**33,000 (53 000)**	**36,000 (58 000)**	**39,000 (62 000)**	**42,000 (67 000)**	**45,000 (72 000)**
Change the engine oil and engine oil filter, if not replaced at 3 months.	X	X	X	X	X
Rotate the tires.		X		X	
Inspect the engine air filter element, replace if necessary.					X
Inspect the brake linings.		X			
Drain and refill the front and rear axle fluid‡		X			
Inspect the drive belt and replace as needed.					X

Miles (Kilometers)	**48,000 (77 000)**	**51,000 (82 000)**	**54,000 (86 000)**	**57,000 (91 000)**	**60,000 (96 000)**
Change the engine oil and engine oil filter, if not replaced at 3 months.	X	X	X	X	X
Rotate the tires.	X		X		X
Inspect the engine air filter element, replace if necessary.					X
Replace the spark plugs.					X
Inspect and replace the PCV valve, if necessary. ◊					X

MAINTENANCE SCHEDULES (Continued)

Miles (Kilometers)	**48,000 (77 000)**	**51,000 (82 000)**	**54,000 (86 000)**	**57,000 (91 000)**	**60,000 (96 000)**
Replace the ignition cables (2.4L Only).					X
Inspect the brake linings.	X				X
Drain and refill the front and rear axle fluid‡	X				X
Drain and refill the automatic transmission fluid, and replace main sump filter.					X
Inspect the drive belt and replace as needed. Not required if belt was previously					X
Drain and refill the transfer case fluid.					X
Flush and replace the engine coolant/anti-freeze at 60 months, if not done at 102,000 miles (163 000 km).					X

Miles (Kilometers)	**63,000 (101 000)**	**66,000 (106 000)**	**69,000 (110 000)**	**72,000 (115 000)**	**75,000 (120 000)**
Change the engine oil and engine oil filter, if not replaced at 3 months.	X	X	X	X	X
Rotate the tires.		X		X	
Inspect the engine air filter element, replace if necessary.					X
Inspect the brake linings.				X	
Drain and refill the front and rear axle fluid‡				X	
Inspect the drive belt and replace as needed. Not required if belt was previously replaced.					X

Miles (Kilometers)	**78,000 (125 000)**	**81,000 (130 000)**	**84,000 (134 000)**	**87,000 (139 000)**	**90,000 (144 000)**
Change the engine oil and engine oil filter, if not replaced at 3 months.	X	X	X	X	X
Rotate the tires.	X		X		X
Inspect the engine air filter element, replace if necessary.					X
Replace the spark plugs.					X
Inspect and replace the PCV valve, if necessary. ◊					X
Inspect the brake linings.			X		
Drain and refill the front and rear axle fluid‡			X		
Inspect the drive belt and replace as needed. Not required if belt was previously replaced.					X
Replace the timing belt (2.4L Only). ◊					X
Inspect the transfer case fluid, add if necessary.					X

MAINTENANCE SCHEDULES (Continued)

Miles (Kilometers)	**93,000 (149 000)**	**96,000 (154 000)**	**99,000 (158 000)**	**102,000 (163 000)**	**105,000 (168 000)**
Change the engine oil and engine oil filter, if not replaced at 3 months.	X	X	X	X	X
Rotate the tires.		X		X	
Inspect the engine air filter element, replace if necessary.					X
Inspect the brake linings.		X			
Drain and refill the front and rear axle fluid‡		X			
Inspect the drive belt and replace as needed. Not required if belt was previously replaced.					X
Flush and replace the engine coolant/anti-freeze, if not done at 60 months.				X	

Miles (Kilometers)	**108,000 (173 000)**	**111,000 (178 000)**	**114,000 (182 000)**	**117,000 (187 000)**	**120,000 (192 000)**
Change the engine oil and engine oil filter, if not replaced at 3 months.	X	X	X	X	X
Rotate the tires.	X		X		X
Inspect the engine air filter element, replace if necessary.					X
Replace the spark plugs.					X
Inspect and replace the PCV valve, if necessary. ◊					X
Replace the ignition cables (2.4L Only).					X
Inspect the brake linings.	X				X
Drain and refill the front and rear axle fluid‡	X				X
Drain and refill the automatic transmission fluid, and replace main sump filter.					X
Inspect the drive belt and replace as needed. Not required if belt was previously replaced.					X
Drain and refill the transfer case fluid.					X
Flush and replace the engine coolant/anti-freeze at 120 months, if not replaced at 102,000 miles (163 000 km).					X

Inspection and service should be performed anytime a malfunction is observed or suspected. Retain all receipts.

◊ This maintenance is recommended by the manufacturer to the owner, but it is not required to maintain emissions warranty.

‡Off-highway operation, trailer towing, taxi, limousine, bus, snow plowing, or other types of commercial service or prolonged operation with heavy loading, especially in hot weather, require front and rear axle service indicated with a ‡ in Schedule “B”. Perform these services if the vehicle is usually operated under these conditions.

MAINTENANCE SCHEDULES (Continued)

Schedule "A"

Miles **(Kilometers)** **[Months]**	**6,000** **(10 000)** **[6]**	**12,000** **(19 000)** **[12]**	**18,000** **(29 000)** **[18]**	**24,000** **(38 000)** **[24]**	**30,000** **(48 000)** **[30]**
Change the engine oil and engine oil filter.	X	X	X	X	X
Rotate the tires.	X	X	X	X	X
Inspect the engine air filter element, and replace if necessary.					X
Replace the spark plugs.					X
Inspect the brake linings.			X		
Inspect the transfer case fluid.					X

Miles **(Kilometers)** **[Months]**	**36,000** **(58 000)** **[36]**	**42,000** **(67 000)** **[42]**	**48,000** **(77 000)** **[48]**	**54,000** **(86 000)** **[54]**
Change the engine oil and engine oil filter.	X	X	X	X
Rotate the tires.	X	X	X	X
Inspect the brake linings.	X			X

Miles **(Kilometers)** **[Months]**	**60,000** **(96 000)** **[60]**	**66,000** **(106 000)** **[66]**	**72,000** **(115 000)** **[72]**	**78,000** **(125 000)** **[78]**
Change the engine oil and engine oil filter.	X	X	X	X
Rotate the tires.	X	X	X	X
Inspect the engine air filter element, and replace if necessary.	X			
Replace the spark plugs.	X			
Inspect the ignition cables, and replace if necessary (2.4L Only).	X			
Inspect and replace the PCV valve, if necessary. ◊	X			
Inspect the brake linings.			X	
Inspect the drive belt and replace, if needed.	X			
Inspect the drive belt and replace as needed. Not required if previously replaced.			X	
Flush and replace the engine coolant/anti-freeze at 60 months, if not done at 102,000 miles (163 000 km).	X			
Inspect the transfer case fluid.	X			

MAINTENANCE SCHEDULES (Continued)

Miles **(Kilometers)** **[Months]**	**84,000** **(134 000)** **[84]**	**90,000** **(144 000)** **[90]**	**96,000** **(154 000)** **[96]**	**102,000** **(163 000)** **[102]**
Change the engine oil and engine oil filter.	X	X	X	X
Rotate the tires.	X	X	X	X
Inspect the engine air filter element, and replace if necessary.		X		
Replace the spark plugs.		X		
Inspect and replace the PCV valve, if necessary. ◊		X		
Inspect the brake linings.		X		
Inspect the drive belt and replace as needed. Not required if previously replaced.	X		X	
Flush and replace the engine coolant/anti-freeze if not done at 60 months.				X
Inspect the transfer case fluid.		X		

Miles **(Kilometers)** **[Months]**	**108,000** **(173 000)** **[108]**	**114,000** **(182 000)** **[114]**	**120,000** **(192 000)** **[120]**
Change the engine oil and engine oil filter.	X	X	X
Rotate the tires.	X	X	X
Inspect the engine air filter element, and replace if necessary.			X
Replace the spark plugs.			X
Inspect and replace the PCV valve, if necessary. ◊			X
Inspect the ignition cables, and replace if necessary (2.4L Only).			X
Inspect the brake linings.	X		
Inspect the drive belt and replace as needed. Not required if previously replaced.	X		X
Flush and replace the engine coolant/anti-freeze if not done at 102,000 miles (163 000 km).			X
Replace the timing belt (2.4L Only). ◊			X
Drain and refill the transfer case fluid.			X

Inspection and service should be performed anytime a malfunction is observed or suspected. Retain all receipts.

◊ This maintenance is recommended by the manufacturer to the owner, but it is not required to maintain emissions warranty.

MAINTENANCE SCHEDULES (Continued)

MAINTENANCE SCHEDULES - DIESEL ENGINE

There are two maintenance schedules that show the **required** service for your vehicle.

First is Schedule ″**B**″. It is for vehicles that are operated under the conditions that are listed below and at the beginning of the schedule.

- Day or night temperatures are below 32°F (0°C).
- Stop and go driving.
- Extensive engine idling.
- Driving in dusty conditions.
- Short trips of less than 10 miles (16.2 km).
- More than 50% of your driving is at sustained high speeds during hot weather, above 90°F (32°C).
- Trailer towing.
- Taxi, police, or delivery service (commercial service).
- Off-road or desert driving.

NOTE: Most vehicles are operated under the conditions listed for Schedule "B."

Second is Schedule **"A"**. It is for vehicles that are not operated under any of the conditions listed under Schedule "B."

Use the schedule that best describes your driving conditions. Where time and mileage are listed, follow the interval that occurs first.

CAUTION: Failure to perform the required maintenance items may result in damage to the vehicle.

At Each Stop for Fuel

- Check the engine oil level about 5 minutes after a fully warmed engine is shut off. Checking the oil level while the vehicle is on level ground will improve the accuracy of the oil level reading. Add oil only when the level is at or below the ADD or MIN mark.
- Check the windshield washer solvent, add as required.

Once a Month

- Check the tire pressure and look for unusual wear or damage.
- Inspect the battery, clean and tighten the terminals as required.
- Check the fluid levels of engine coolant/anti-freeze deaeration bottle, brake master cylinder, and transmission, and add as needed.
- Check all lights and all other electrical items for correct operation.

At Each Oil Change

- Change the engine oil filter.
- Inspect the exhaust system.
- Inspect brake hoses.
- Check the engine coolant/anti-freeze level, hoses, and clamps.
- Inspect engine accessory drive belts. Replace as necessary.
- Inspect for the presence of water in the fuel filter/water separator unit.

Tire Rotation

- Rotate the tires every 6,000 miles (10 000 km).

Schedule "B"

Follow schedule "B" if you usually operate your vehicle under one or more of the following conditions.

- Day or night temperatures are below 32°F (0°C).
- Stop and go driving.
- Extensive engine idling.
- Driving in dusty conditions.
- Short trips of less than 10 miles (16.2 km).
- More than 50% of your driving is at sustained high speeds during hot weather, above 90°F (32°C).
- Trailer towing.
- Taxi, police, or delivery service (commercial service).
- Off-road or desert driving.

Miles (Kilometers)	**6,250 (10 000)**	**12,500 (20 000)**	**18,750 (30 000)**	**25,000 (40 000)**	**31,250 (50 000)**
Change the engine oil and engine oil filter.	X	X	X	X	X
Inspect the engine air filter element. Replace as necessary.	X	X	X	X	X
Replace the engine air filter element.		X		X	
Replace the fuel filter/water separator unit.				X	
Inspect the brake linings.		X		X	
Drain and refill the front and rear axle fluid.		X		X	

MAINTENANCE SCHEDULES (Continued)

Miles (Kilometers)	**37,500 (60 000)**	**43,750 (70 000)**	**50,000 (80 000)**	**56,250 (90 000)**	**62,500 (100 000)**
Change the engine oil and engine oil filter.	X	X	X	X	X
Inspect the engine air filter element. Replace as necessary.	X	X	X	X	X
Replace the engine air filter element.	X		X		X
Replace the fuel filter/water separator unit.			X		
Replace the engine accessory drive belt.	X				
Inspect the brake linings.	X		X		X
Drain and refill the front and rear axle fluid.	X		X		X
Drain and refill the transfer case fluid.					X
Drain and refill the automatic transmission fluid, and replace sump filter.◊					X

Miles (Kilometers)	**68,750 (110 000)**	**75,000 (120 000)**	**81,250 (130 000)**	**87,500 (140 000)**	**93,750 (150 000)**	**100,000 (160 000)**
Change the engine oil and engine oil filter.	X	X	X	X	X	X
Inspect the engine air filter element. Replace as necessary.	X	X	X	X	X	X
Replace the engine air filter element.		X		X		X
Replace the engine accessory drive belt.		X				
Replace the engine timing belt and idler pulleys.						X
Inspect the engine timing belt tensioner, replace if necessary.†						X
Replace the fuel filter/water separator unit.		X				X
Flush and replace the engine coolant/anti-freeze.						X
Inspect the brake linings.		X		X		
Drain and refill the front and rear axle fluid.		X		X		

◊ Applies only if vehicle is used for frequent trailer towing, or fleet/commercial service.

† The replacement of such component is requested if there is superficial wear, bearing clearance, or evident grease leak.

Inspection and service should be performed anytime a malfunction is observed or suspected. Retain all receipts.

MAINTENANCE SCHEDULES (Continued)

Schedule "A"

Miles (Kilometers)	**12,500 (20 000)**	**25,000 (40 000)**	**37,500 (60 000)**	**50,000 (80 000)**
Change the engine oil and engine oil filter.	X	X	X	X
Inspect the engine air filter element. Replace as necessary.	X	X	X	X
Replace the engine air filter element.		X		X
Replace the fuel filter/water separator unit.		X		X
Inspect the brake linings.		X		X
Inspect the transfer case fluid.	X			

Miles (Kilometers)	**62,500 (100 000)**	**75,000 (120 000)**	**87,500 (140 000)**	**100,000 (160 000)**
Change the engine oil and engine oil filter.	X	X	X	X
Inspect the engine air filter element. Replace as necessary.	X	X	X	X
Replace the engine air filter element.		X		X
Replace the fuel filter/water separator unit.		X		X
Replace the engine timing belt, and idler pulleys.				X
Inspect the engine timing belt tensioner, replace if necessary.†				X
Flush and replace the engine coolant.	X			
Replace the engine accessory drive belt.	X			
Inspect the brake linings.		X		X
Inspect the transfer case fluid.	X			

† The replacement of such component is requested if there is superficial wear, bearing clearance, or evident grease leak.

Inspection and service should be performed anytime a malfunction is observed or suspected. Retain all receipts.

MAINTENANCE SCHEDULES - GASOLINE ENGINES - EXPORT

There are two maintenance schedules that show the **required** service for your vehicle.

First is Schedule **"A"**. It is for vehicles that are not operated under any of the conditions listed under Schedule "B."

Second is Schedule **"B"**. It is for vehicles that are operated under the conditions that are listed below and at the beginning of the schedule.

- Day or night temperatures are below 0°C (32°F).
- Stop and go driving.
- Extensive engine idling.
- Driving in dusty conditions.
- Short trips of less than 16.2 km (10 miles).
- More than 50% of your driving is at sustained high speeds during hot weather, above 32°C (90°F).
- Trailer towing.
- Taxi, police, or delivery service (commercial service).
- Off-road or desert driving.

Most vehicles are operated under the conditions listed for Schedule "B."

Use the schedule that best describes your driving conditions. Where time and mileage are listed, follow the interval that occurs first.

CAUTION: Failure to perform the required maintenance items may result in damage to the vehicle.

At Each Stop for Fuel

- Check the engine oil level about 5 minutes after a fully warmed engine is shut off. Checking the oil level while the vehicle is on level ground will improve the accuracy of the oil level reading. Add oil only when the level is at or below the ADD or MIN mark.
- Check the windshield washer solvent, add as required.

MAINTENANCE SCHEDULES (Continued)

Once a Month

- Check the tire pressure and look for unusual wear or damage.
- Inspect the battery, and clean and tighten the terminals as required.
- Check the fluid levels of the coolant reservoir, brake master cylinder, and transmission, and add as needed.
- Check all lights and all other electrical items for correct operation.

At Each Oil Change

- Change the engine oil filter.
- Inspect the exhaust system.
- Inspect brake hoses.
- Check the coolant level, hoses, and clamps.
- Inspect manual transmission fluid level — if equipped.
- After completion of off-road operation, the underside of the vehicle should be thoroughly inspected. Examine threaded fasteners for looseness.

Schedule "A"

Kilometers **(Miles)** **[Months]**	**12 000** **(7,500)** **[6]**	**24 000** **(15,000)** **[12]**	**36 000** **(22,500)** **[18]**	**48 000** **(30,000)** **[24]**	**60 000** **(37,500)** **[30]**
Change the engine oil and engine oil filter.	X	X	X	X	X
Rotate the tires.	X	X	X	X	X
Inspect the engine air filter element, replace if necessary.				X	
Replace the spark plugs.				X	
Inspect the brake linings.			X		
Inspect the transfer case fluid.				X	

Kilometers **(Miles)** **[Months]**	**72 000** **(45,000)** **[36]**	**84 000** **(52,500)** **[42]**	**96 000** **(60,000)** **[48]**	**108 000** **(67,500)** **[54]**
Change the engine oil and engine oil filter.	X	X	X	X
Rotate the tires.	X	X	X	X
Inspect the engine air filter element, replace if necessary.			X	
Inspect and replace the PCV valve, if necessary◊.			X	
Inspect the ignition cables, and replace if necessary (2.4L Only).			X	
Replace the spark plugs.			X	
Inspect the brake linings.	X			X
Inspect and replace the Auto Tension Drive Belt, as needed.			X	
Inspect the transfer case fluid.			X	

Kilometers **(Miles)** **[Months]**	**120 000** **(75,000)** **[60]**	**132 000** **(82,500)** **[66]**	**144 000** **(90,000)** **[72]**	**156 000** **(97,500)** **[78]**
Change the engine oil and engine oil filter.	X	X	X	X
Rotate the tires.	X	X	X	X
Inspect the engine air filter element, replace if necessary.			X	

MAINTENANCE SCHEDULES (Continued)

Kilometers **(Miles)** **[Months]**	**120 000** **(75,000)** **[60]**	**132 000** **(82,500)** **[66]**	**144 000** **(90,000)** **[72]**	**156 000** **(97,500)** **[78]**
Replace the spark plugs.			X	
Inspect and replace the PCV valve, if necessary. ◊			X	
Inspect the brake linings.			X	
Inspect the drive belt and replace as needed. Not required if previously replaced.	X		X	
Flush and replace the engine coolant at 60 months, regardless of mileage.	X			
Inspect the transfer case fluid.			X	

Kilometers **(Miles)** **[Months]**	**160 000** **(100,000)**	**168 000** **(105,000)** **[84]**	**180 000** **(112,500)** **[90]**	**192 000** **(120,000)** **[96]**
Change the engine oil and engine oil filter.		X	X	X
Rotate the tires.		X	X	X
Inspect the engine air filter element, replace if necessary.				X
Replace the spark plugs.				X
Inspect the ignition cables, replace if necessary (2.4L Only).				X
Inspect and replace the PCV valve, if necessary. ◊				X
Inspect the brake linings.			X	
Inspect the drive belt and replace as needed. Not required if previously replaced.		X		X
Flush and replace the engine coolant if not done at 60 months.	X			
Replace the timing belt (2.4L Only).				X
Drain the transfer case, and refill.				X

Inspection and service should be performed anytime a malfunction is observed or suspected. Retain all receipts.

◊ This maintenance is recommended by the manufacturer to the owner, but it is not required to maintain emissions warranty.

MAINTENANCE SCHEDULES (Continued)

Schedule "B"

Follow schedule "B" if you usually operate your vehicle under one or more of the following conditions.

- Day or night temperatures are below 0°C (32°F).
- Stop and go driving.
- Extensive engine idling.
- Driving in dusty conditions.
- Short trips of less than 16.2 km (10 miles).
- More than 50% of your driving is at sustained high speeds during hot weather, above 32°C (90°F).
- Trailer towing.
- Taxi, police, or delivery service (commercial service).
- Off-road or desert driving.

Kilometers (Miles)	**5 000 (3,000)**	**10 000 (6,000)**	**14 000 (9,000)**	**19 000 (12,000)**	**24 000 (15,000)**
Change the engine oil and engine oil filter.	X	X	X	X	X
Rotate the tires.		X		X	
Inspect the engine air filter element, replace if necessary.					X
Inspect the brake linings.				X	
Drain and refill the front and rear axle fluid‡				X	

Kilometers (Miles)	**29 000 (18,000)**	**34 000 (21,000)**	**38 000 (24,000)**	**43 000 (27,000)**	**48 000 (30,000)**
Change the engine oil and engine oil filter.	X	X	X	X	X
Rotate the tires.	X		X		X
Inspect the engine air filter element, replace if necessary.					X
Replace the spark plugs.					X
Inspect and replace the PCV valve, if necessary. ◊					X
Inspect the brake linings.			X		
Drain and refill the front and rear axle fluid‡			X		
Inspect the transfer case fluid, add if necessary.					X

Kilometers (Miles)	**53 000 (33,000)**	**58 000 (36,000)**	**62 000 (39,000)**	**67 000 (42,000)**	**72 000 (45,000)**
Change the engine oil and engine oil filter.	X	X	X	X	X
Rotate the tires.		X		X	
Inspect the engine air filter element, replace if necessary.					X
Inspect the brake linings.		X			
Drain and refill the front and rear axle fluid‡		X			
Inspect the drive belt and replace as needed.					X

Kilometers (Miles)	**77 000 (48,000)**	**82 000 (51,000)**	**86 000 (54,000)**	**91 000 (57,000)**	**96 000 (60,000)**
Change the engine oil and engine oil filter.	X	X	X	X	X
Rotate the tires.	X		X		X
Inspect the engine air filter element, replace if necessary.					X

MAINTENANCE SCHEDULES (Continued)

Kilometers **(Miles)**	**77 000** **(48,000)**	**82 000** **(51,000)**	**86 000** **(54,000)**	**91 000** **(57,000)**	**96 000** **(60,000)**
Replace the spark plugs.					X
Inspect and replace the PCV valve, if necessary. ◊					X
Replace the ignition cables (2.4L Only).					X
Inspect the brake linings.	X				X
Drain and refill the front and rear axle fluid‡	X				X
Drain and refill the automatic transmission fluid, and replace main sump filter.					X
Inspect the drive belt and replace as needed. Not required if belt was previously replaced.					X
Drain and refill the transfer case fluid.					X
Flush and replace the engine coolant/anti-freeze at 60 months, if not done at 102,000 miles (163 000 km).					X

Kilometers **(Miles)**	**101 000** **(63,000)**	**106 000** **(66,000)**	**110 000** **(69,000)**	**115 000** **(72,000)**	**120 000** **(75,000)**
Change the engine oil and engine oil filter.	X	X	X	X	X
Rotate the tires.		X		X	
Inspect the engine air filter element, replace if necessary.					X
Inspect the brake linings.				X	
Drain and refill the front and rear axle fluid‡				X	
Inspect the drive belt and replace as needed. Not required if belt was previously replaced.					X

Kilometers **(Miles)**	**125 000** **(78,000)**	**130 000** **(81,000)**	**134 000** **(84,000)**	**139 000** **(87,000)**	**144 000** **(90,000)**
Change the engine oil and engine oil filter.	X	X	X	X	X
Rotate the tires.	X		X		X
Inspect the engine air filter element, replace if necessary.					X
Replace the spark plugs.					X
Inspect and replace the PCV valve, if necessary. ◊					X
Inspect the brake linings.			X		
Drain and refill the front and rear axle fluid‡			X		
Inspect the drive belt and replace as needed. Not required if belt was previously replaced.					X
Replace the timing belt (2.4L Only).					X
Inspect the transfer case fluid, add if necessary.					X

MAINTENANCE SCHEDULES (Continued)

Kilometers (Miles)	**149 000 (93,000)**	**154 000 (96,000)**	**158 000 (99,000)**	**163 000 (102,000)**	**168 000 (105,000)**
Change the engine oil and engine oil filter.	X	X	X	X	X
Rotate the tires.		X		X	
Inspect the engine air filter element, replace if necessary.					X
Inspect the brake linings.		X			
Drain and refill the front and rear axle fluid‡		X			
Inspect the drive belt and replace as needed. Not required if belt was previously replaced.					X
Flush and replace the engine coolant/anti-freeze, if not done at 60 months.				X	

Kilometers (Miles)	**173 000 (108,000)**	**178 000 (111,000)**	**182 000 (114,000)**	**187 000 (117,000)**	**192 000 (120,000)**
Change the engine oil and engine oil filter.	X	X	X	X	X
Rotate the tires.	X		X		X
Inspect the engine air filter element, replace if necessary.					X
Replace the spark plugs.					X
Inspect and replace the PCV valve, if necessary. ◊					X
Replace the ignition cables (2.4L Only).					X
Inspect the brake linings.	X				X
Drain and refill the front and rear axle fluid‡	X				X
Drain and refill the automatic transmission fluid, and replace main sump filter.					X
Inspect the drive belt and replace as needed. Not required if belt was previously replaced.					X
Drain and refill the transfer case fluid.					X
Flush and replace the engine coolant/anti-freeze at 120 months, if not replaced at 102,000 miles (163 000 km).					X

Inspection and service should be performed anytime a malfunction is observed or suspected. Retain all receipts.

◊ This maintenance is recommended by the manufacturer to the owner, but it is not required to maintain emissions warranty.

‡Off-highway operation, trailer towing, taxi, limousine, bus, snow plowing, or other types of commercial service or prolonged operation with heavy loading, especially in hot weather, require front and rear axle service indicated with a ‡ in Schedule “B”. Perform these services if the vehicle is usually operated under these conditions.

DESCRIPTION – DIESEL ENGINES – EXPORT SCHEDULES

There are two maintenance schedules that show the **required** service for your vehicle.

First is Schedule **“A”**. It is for vehicles that are not operated under any of the conditions listed under Schedule ″B″.

Second is Schedule **“B”**. It is for vehicles that are operated under the conditions that are listed below and at the beginning of the schedule.

- Extensive engine idling.
- Driving in dusty conditions.

MAINTENANCE SCHEDULES (Continued)

• More than 50% of your driving is at sustained high speeds during hot weather, above 32° C (90° F).
• Trailer towing.
• Taxi, police, or delivery service (commercial service).

Most vehicles are operated under the conditions listed for Schedule ″B″.

Use the schedule that best describes your driving conditions. Where time and mileage are listed, follow the interval that occurs first.

CAUTION: Failure to perform the required maintenance items may result in damage to the vehicle.

At Each Stop for Fuel

• Check the engine oil level about 5 minutes after a fully warmed engine is shut off. Checking the oil level while the vehicle is on level ground will improve the accuracy of the oil level reading. Add oil only when the level is at or below the ADD or MIN mark.
• Check the windshield washer solvent and add if required.

Once a Month

• Check the tire pressure and look for unusual wear or damage.
• Inspect the battery and clean and tighten the terminals as required.
• Check the fluid levels of coolant reservoir, brake master cylinder, power steering and transmission and add as needed.
• Check all lights and all other electrical items for correct operation.

At Each Oil Change

• Change the engine oil filter.
• Inspect the exhaust system.
• Inspect the brake hoses.
• Check the manual transmission fluid level — if equipped.
• Check the coolant level, hoses, and clamps.
• Inspect engine accessory drive belts. Replace as necessary.
• Inspect for the presence of water in the fuel filter/water separator unit.
• Rotate the tires.

Schedule “A”

Kilometers	20 000 km	40 000 km	60 000 km	80 000 km	100 000 km
Change the engine oil and engine oil filter.	X	X	X	X	X
Inspect the engine air filter element. Replace as necessary.	X		X		X
Replace the engine air filter element.		X		X	
Replace the fuel filter/water separator unit.	X	X	X	X	X
Replace the engine timing belt, and idler pulleys.					X
Inspect timing belt tensioner, and replace if necessary.‡					X
Inspect the engine accessory drive belt.	X	X	X	X	
Replace the engine accessory drive belt.					X
Inspect the ball joints.	X	X	X	X	X
Inspect the brake linings.		X		X	
Inspect the transfer case fluid.			X		

Kilometers	120 000 km	140 000 km	160 000 km	180 000 km
Change the engine oil and engine oil filter.	X	X	X	X
Inspect the engine accessory drive belts, and replace if necessary.	X	X	X	X
Inspect the engine air filter element. Replace as necessary.		X		X

MAINTENANCE SCHEDULES (Continued)

Kilometers	120 000 km	140 000 km	160 000 km	180 000 km
Replace the engine air filter element.	X		X	
Replace the fuel filter/water separator unit.	X	X	X	X
Flush and replace the engine coolant.			X	
Inspect the ball joints.	X	X	X	X
Inspect the brake linings.	X		X	
Drain and refill the automatic transmission fluid, change sump filter, and cooler return filter (if equipped).			X	
Inspect the transfer case fluid.	X			
Drain and refill the transfer case fluid.				X

Inspection and service should also be performed anytime a malfunction is observed or suspected.

‡ Replace if there is superficial wear, bearing clearance, or evident grease leak.

WARNING: You can be badly injured working on or around a motor vehicle. Do only that service work for which you have the knowledge and the right equipment. If you have any doubt about your ability to perform a service job, take your vehicle to a competent mechanic.

Schedule "B"

Follow schedule "B" if you usually operate your vehicle under one or more of the following conditions.

- Extensive engine idling.
- Driving in dusty conditions.
- More than 50% of your driving is at sustained high speeds during hot weather, above 32° C (90° F).
- Trailer towing.
- Taxi, police, or delivery service (commercial service).

Kilometers	10 000 km	20 000 km	30 000 km	40 000 km	50 000 km
Change the engine oil and engine oil filter.	X	X	X	X	X
Inspect the engine air filter element. Replace as necessary.	X		X		X
Replace the engine air filter element.		X		X	
Replace the fuel filter/water separator unit.		X		X	
Inspect the engine accessory drive belt.	X	X	X	X	
Replace the engine accessory drive belt.					X
Replace the engine timing belt and idler pulleys.					X
Inspect the timing belt tensioner.‡					X
Inspect the ball joints.	X	X	X	X	X
Inspect the brake linings.		X		X	
Drain and refill the front and rear axle fluid.		X		X	
Drain and refill the automatic transmission fluid, and replace sump filter.					X

MAINTENANCE SCHEDULES (Continued)

Kilometers	60 000 km	70 000 km	80 000 km	90 000 km	100 000 km
Change the engine oil and engine oil filter.	X	X	X	X	X
Inspect the engine air filter element. Replace as necessary.		X		X	
Replace the engine air filter element.	X		X		X
Replace the fuel filter/water separator unit.	X		X		X
Inspect the engine accessory drive belt.	X	X	X	X	
Replace the engine accessory drive belt.					X
Replace the engine timing belt, idler pulleys, and tensioner.					X
Inspect the ball joints.	X	X	X	X	X
Inspect the brake linings.	X		X		X
Drain and refill the front and rear axle fluid.	X		X		X
Drain and refill the transfer case fluid.					X
Drain and refill the automatic transmission fluid, and replace sump filter.					X

Kilometers	110 000 km	120 000 km	130 000 km	140 000 km	150 000 km	160 000 km
Change the engine oil and engine oil filter.	X	X	X	X	X	X
Inspect the engine air filter element. Replace as necessary.	X		X		X	
Replace the engine air filter element.		X		X		X
Inspect the engine accessory drive belts, and replace if necessary.	X	X	X	X		X
Replace the engine accessory drive belt.					X	
Inspect the timing belt tensioner.‡					X	
Replace the engine timing belt and idler pulleys.					X	
Replace the fuel filter/water separator unit.		X		X		X
Flush and replace the engine coolant.						X
Inspect the ball joints.	X	X	X	X	X	X
Inspect the brake linings.		X		X		X
Drain and refill the front and rear axle fluid.		X		X		X
Drain and refill the automatic transmission fluid, and replace sump filter.					X	
Replace the transmission cooler return filter (if equipped).					X	

Inspection and service should also be performed anytime a malfunction is observed or suspected.

‡ Replace if there is superficial wear, bearing clearance, or evident grease leak.

FLUID FILL/CHECK LOCATIONS

DESCRIPTION

The fluid check/fill point locations are located in each applicable service manual section.

HOISTING

STANDARD PROCEDURE - HOISTING RECOMMENDATIONS

Refer to the Owner's Manual for emergency vehicle lifting procedures.

When properly positioned, a floor jack can be used to lift a Jeep vehicle (Fig. 5). Support the vehicle in the raised position with jack stands at the front and rear ends of the frame rails.

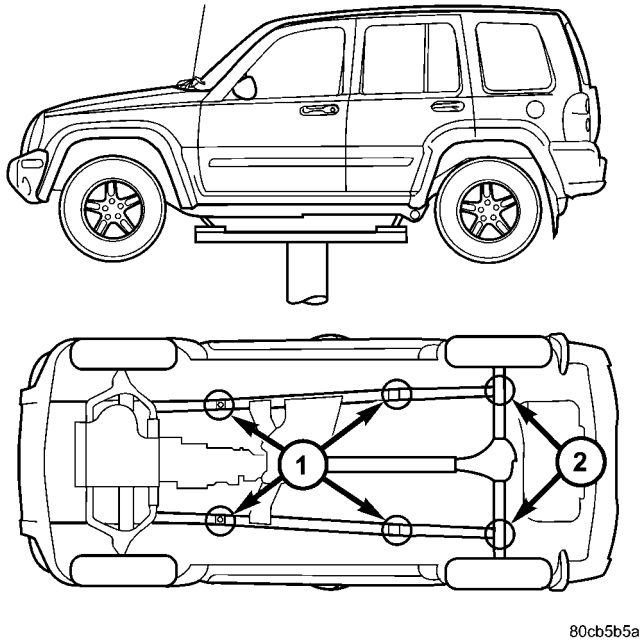

Fig. 5 Correct Vehicle Lifting Locations

1 -	Frame Contact Lift (Single Post) Chassis Lift (Non-Axle Dual Post) Outboard Lift (Dual Post) Floor Jack
2 -	Floor Jack

CAUTION: Do not attempt to lift a Jeep vehicle with a floor jack positioned under:

- A body side sill.
- A steering linkage component.
- A drive shaft.
- The engine or transmission oil pan.
- The fuel tank.
- A front suspension arm.
- Transfer case.

NOTE: Use the correct sub-frame rail or frame rail lifting locations only.

HOIST

Refer to the Owner's Manual for emergency vehicle lifting procedures.

A vehicle can be lifted with:

- A single-post, frame-contact hoist.
- A twin-post, chassis hoist.
- A ramp-type, drive-on hoist.

NOTE: When a frame-contact type hoist is used, verify that the lifting pads are positioned properly.

WARNING: THE HOISTING AND JACK LIFTING POINTS PROVIDED ARE FOR A COMPLETE VEHICLE. WHEN A CHASSIS OR DRIVETRAIN COMPONENT IS REMOVED FROM A VEHICLE, THE CENTER OF GRAVITY IS ALTERED MAKING SOME HOISTING CONDITIONS UNSTABLE. PROPERLY SUPPORT OR SECURE VEHICLE TO HOISTING DEVICE WHEN THESE CONDITIONS EXIST.

JUMP STARTING

STANDARD PROCEDURE - JUMP STARTING PROCEDURE

WARNING: REVIEW ALL SAFETY PRECAUTIONS AND WARNINGS IN THE BATTERY SYSTEM SECTION OF THE SERVICE MANUAL. (Refer to 8 - ELECTRICAL/BATTERY SYSTEM/BATTERY - STANDARD PROCEDURE)

- **DO NOT JUMP START A FROZEN BATTERY, PERSONAL INJURY CAN RESULT.**
- **IF EQUIPPED, DO NOT JUMP START WHEN MAINTENANCE FREE BATTERY INDICATOR DOT IS YELLOW OR BRIGHT COLOR.**
- **DO NOT JUMP START A VEHICLE WHEN THE BATTERY FLUID IS BELOW THE TOP OF LEAD PLATES.**
- **DO NOT ALLOW JUMPER CABLE CLAMPS TO TOUCH EACH OTHER WHEN CONNECTED TO A BOOSTER SOURCE.**
- **DO NOT USE OPEN FLAME NEAR BATTERY.**
- **REMOVE METALLIC JEWELRY WORN ON HANDS OR WRISTS TO AVOID INJURY BY ACCIDENTAL ARCING OF BATTERY CURRENT.**
- **WHEN USING A HIGH OUTPUT BOOSTING DEVICE, DO NOT ALLOW BATTERY VOLTAGE TO EXCEED 16 VOLTS. REFER TO INSTRUCTIONS PROVIDED WITH DEVICE BEING USED.**

FAILURE TO FOLLOW THESE INSTRUCTIONS MAY RESULT IN PERSONAL INJURY.

JUMP STARTING (Continued)

CAUTION: When using another vehicle as a booster, do not allow vehicles to touch. Electrical systems can be damaged on either vehicle.

TO JUMP START A DISABLED VEHICLE:

(1) Raise hood on disabled vehicle and visually inspect engine compartment for:

- Generator drive belt condition and tension.
- Fuel fumes or leakage, correct if necessary.
- Frozen battery.
- Yellow or bright color test indicator, if equipped.
- Low battery fluid level.

CAUTION: If the cause of starting problem on disabled vehicle is severe, damage to booster vehicle charging system can result.

(2) When using another vehicle as a booster source, turn off all accessories, place gear selector in park or neutral, set park brake or equivalent and operate engine at 1200 rpm.

(3) On disabled vehicle, place gear selector in park or neutral and set park brake or equivalent. Turn OFF all accessories.

(4) Connect jumper cables to booster battery. RED clamp to positive terminal (+). BLACK clamp to negative terminal (-). DO NOT allow clamps at opposite end of cables to touch, electrical arc will result (Fig. 6). Review all warnings in this procedure.

(5) On disabled vehicle, connect RED jumper cable clamp to battery positive (+) terminal. Connect BLACK jumper cable clamp to the engine as close to the ground cable connection as possible (Fig. 6).

CAUTION: Do not crank starter motor on disabled vehicle for more than 15 seconds, starter will overheat and could fail.

(6) Allow battery in disabled vehicle to charge to at least 12.4 volts (75% charge) before attempting to start engine. If engine does not start within 15 seconds, stop cranking engine and allow starter to cool (15 min.), before cranking again.

DISCONNECT CABLE CLAMPS AS FOLLOWS:

- Disconnect BLACK cable clamp from engine ground on disabled vehicle.
- When using a Booster vehicle, disconnect BLACK cable clamp from battery negative terminal. Disconnect RED cable clamp from battery positive terminal.
- Disconnect RED cable clamp from battery positive terminal on disabled vehicle.

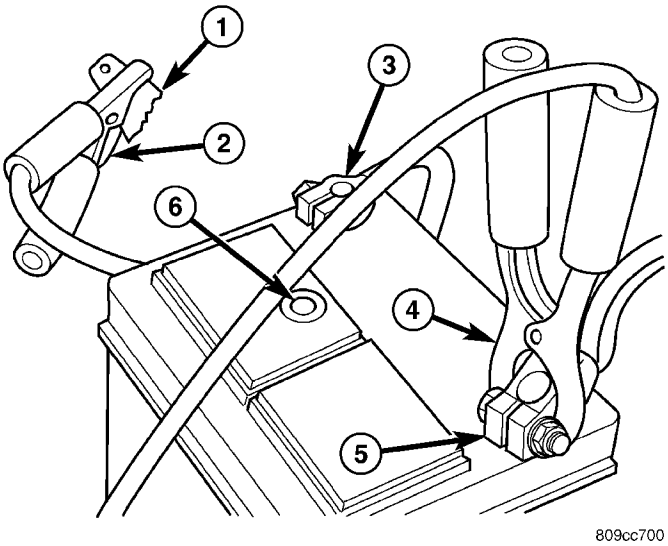

Fig. 6 Jumper Cable Clamp Connections

1 - ENGINE GROUND
2 - NEGATIVE JUMPER CABLE
3 - BATTERY NEGATIVE CABLE
4 - POSITIVE JUMPER CABLE
5 - BATTERY POSITIVE CABLE
6 - BATTERY
7 - TEST INDICATOR (IF EQUIPPED)

TOWING

STANDARD PROCEDURE - TOWING

A vehicle equipped with SAE approved wheel lift-type towing equipment can be used to tow Jeep vehicles. When towing a 4WD vehicle using a wheel-lift towing device, use tow dollies under the opposite end of the vehicle. A vehicle with flatbed device can also be used to transport a disabled vehicle (Fig. 7).

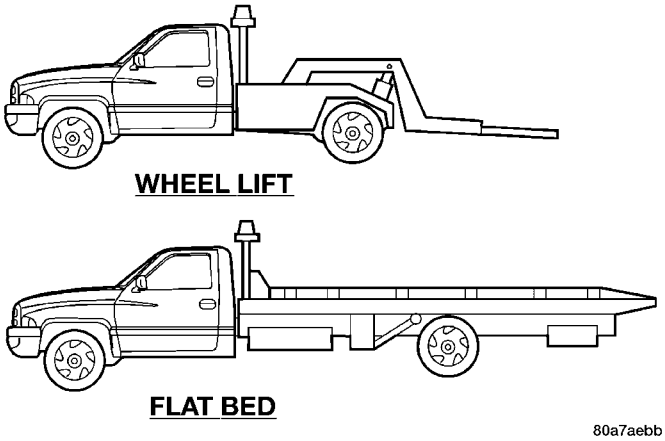

Fig. 7 Tow Vehicles With Approved Equipment

TOWING (Continued)

SAFETY PRECAUTIONS

CAUTION: The following safety precautions must be observed when towing a vehicle:

- Secure loose and protruding parts.
- Always use a safety chain system that is independent of the lifting and towing equipment.
- Do not allow towing equipment to contact the disabled vehicle's fuel tank.
- Do not allow anyone under the disabled vehicle while it is lifted by the towing device.
- Do not allow passengers to ride in a vehicle being towed.
- Always observe state and local laws regarding towing regulations.
- Do not tow a vehicle in a manner that could jeopardize the safety of the operator, pedestrians or other motorists.
- Do not attach tow chains, T-hooks, or J-hooks to a bumper, steering linkage, drive shafts or a non-reinforced frame hole.
- Do not tow a heavily loaded vehicle. Use a flat-bed device to transport a loaded vehicle.

TWO-WHEEL-DRIVE VEHICLE TOWING

DaimlerChrysler Corporation recommends that a vehicle be towed with the rear end lifted, whenever possible.

WARNING: WHEN TOWING A DISABLED VEHICLE AND THE DRIVE WHEELS ARE SECURED IN A WHEEL LIFT OR TOW DOLLIES, ENSURE THE TRANSMISSION IS IN THE PARK POSITION (AUTOMATIC TRANSMISSION) OR A FORWARD DRIVE GEAR (MANUAL TRANSMISSION).

WARNING: ENSURE VEHICLE IS ON A LEVEL SURFACE OR THE WHEELS ARE BLOCKED TO PREVENT VEHICLE FROM ROLLING.

TWO WHEEL DRIVE TOWING-REAR END LIFTED

CAUTION: Do not use steering column lock to secure steering wheel during towing operation.

2WD vehicles can be towed with the front wheels on the surface for extended distances at speeds not exceeding 48 km/h (30 mph).

(1) Attach wheel lift device to rear wheels.
(2) Place the transmission in neutral.
(3) Raise vehicle to towing position.
(4) Attach safety chains. Route chains so not to interfere with tail pipe when vehicle is lifted.
(5) Turn the ignition switch to the OFF position to unlock the steering wheel.

CAUTION: Do not use steering column lock to secure steering wheel during towing operation.

(6) Secure steering wheel in straight ahead position with a clamp device designed for towing.
(7) Place transmission in park.

TWO WHEEL DRIVE TOWING-FRONT END LIFTED

CAUTION: Many vehicles are equipped with air dams, spoilers, and/or ground effect panels. To avoid component damage, a wheel-lift towing vehicle or a flat-bed hauling vehicle is recommended.

(1) Attach wheel lift device to rear wheels.
(2) Place the transmission in neutral.
(3) Raise the rear of the vehicle off the ground and install tow dollies under rear wheels.
(4) Attach wheel lift device to front wheels and raise vehicle to towing position.
(5) Attach the safety chains.

CAUTION: Do not use steering column lock to secure steering wheel during towing operation.

(6) Turn the ignition switch to the OFF position to unlock the steering wheel.
(7) Secure steering wheel in straight ahead position with a clamp device designed for towing.
(8) Place transmission in park.

FOUR-WHEEL-DRIVE VEHICLE TOWING

DaimlerChrysler Corporation recommends that a 4WD vehicle be transported on a flat-bed device. A Wheel-lift device can be used provided **the trailing wheels are off the ground and positioned in tow dollies.**

WARNING: WHEN TOWING A DISABLED VEHICLE AND THE DRIVE WHEELS ARE SECURED IN A WHEEL LIFT OR TOW DOLLIES, ENSURE THE TRANSMISSION IS IN THE PARK POSITION.

CAUTION: Many vehicles are equipped with air dams, spoilers, and/or ground effect panels. To avoid component damage, a wheel-lift towing vehicle or a flat-bed hauling vehicle is recommended.

FOUR WHEEL DRIVE TOWING—REAR END LIFTED

WARNING: ENSURE VEHICLE IS ON A LEVEL SURFACE OR THE WHEELS ARE BLOCKED TO PREVENT VEHICLE FROM ROLLING.

(1) Attach wheel lift device to front wheels.
(2) Place the transmission in neutral.

TOWING (Continued)

(3) Raise the front of the vehicle off the ground and install tow dollies under front wheels.

(4) Attach wheel lift device to rear wheels and raise vehicle to towing position.

(5) Attach safety chains. Route chains so not to interfere with tail pipe when vehicle is lifted.

(6) Turn the ignition switch to the OFF position to unlock the steering wheel.

CAUTION: Do not use steering column lock to secure steering wheel during towing operation.

(7) Secure steering wheel in straight ahead position with a clamp device designed for towing.

(8) Place transmission in park.

FOUR WHEEL DRIVE TOWING—FRONT END LIFTED

WARNING: ENSURE VEHICLE IS ON A LEVEL SURFACE OR THE WHEELS ARE BLOCKED TO PREVENT VEHICLE FROM ROLLING.

(1) Attach wheel lift device to rear wheels.

(2) Place the transmission in neutral.

(3) Raise the rear of the vehicle off the ground and install tow dollies under rear wheels.

(4) Attach wheel lift device to front wheels and raise vehicle to towing position.

(5) Attach the safety chains.

CAUTION: Do not use steering column lock to secure steering wheel during towing operation.

(6) Turn the ignition switch to the OFF position to unlock the steering wheel.

(7) Secure steering wheel in straight ahead position with a clamp device designed for towing.

(8) Place transmission in park.

SUSPENSION

TABLE OF CONTENTS

page

SUSPENSION
DIAGNOSIS AND TESTING - SUSPENSION AND STEERING SYSTEM 1

page

WHEEL ALIGNMENT 3
FRONT 7
REAR 20

SUSPENSION

DIAGNOSIS AND TESTING - SUSPENSION AND STEERING SYSTEM

CONDITION	POSSIBLE CAUSES	CORRECTION
FRONT END NOISE	1. Loose or worn wheel bearings. 2. Loose or worn steering or suspension components.	1. Replace wheel bearings. 2. Tighten or replace components as necessary.
EXCESSIVE PLAY IN STEERING	1. Loose or worn wheel bearings. 2. Loose or worn steering or suspension components. 3. Loose or worn steering gear.	1. Replace wheel bearings. 2. Tighten or replace components as necessary. 3. Adjust or replace steering gear.
FRONT WHEELS SHIMMY	1. Loose or worn wheel bearings. 2. Loose or worn steering or suspension components. 3. Tires worn or out of balance. 4. Alignment.	1. Replace wheel bearings. 2. Tighten or replace components as necessary. 3. Replace or balance tires. 4. Align vehicle to specifications.
VEHICLE INSTABILITY	1. Loose or worn wheel bearings. 2. Loose or worn steering or suspension components. 3. Tire pressure. 4. Alignment.	1. Replace wheel bearings. 2. Tighten or replace components as necessary. 3. Adjust tire pressure. 4. Align vehicle to specifications.
EXCESSIVE STEERING EFFORT	1. Loose or worn steering gear. 2. Power steering fluid low. 3. Column coupler binding. 4. Tire pressure. 5. Alignment.	1. Adjust or replace steering gear. 2. Add fluid and repair leak. 3. Replace coupler. 4. Adjust tire pressure. 5. Align vehicle to specifications.
VEHICLE PULLS TO ONE SIDE DURING BRAKING	1. Uneven tire pressure. 2. Worn brake components. 3. Air in brake line.	1. Adjust tire pressure. 2. Repair brakes as necessary. 3. Repair as necessary.

SUSPENSION (Continued)

CONDITION	POSSIBLE CAUSES	CORRECTION
VEHICLE LEADS OR DRIFTS FROM STRAIGHT AHEAD DIRECTION ON UNCROWNED ROAD	1. Radial tire lead.	1. Cross front tires.
	2. Brakes dragging.	2. Repair brake as necessary.
	3. Weak or broken spring.	3. Replace spring.
	4. Uneven tire pressure.	4. Adjust tire pressure.
	5. Wheel Alignment.	5. Align vehicle.
	6. Loose or worn steering or suspension components.	6. Repair as necessary.
	7. Cross caster out of spec.	7. Align vehicle.
KNOCKING, RATTLING OR SQUEAKING	1. Worn shock bushings.	1. Replace shock.
	2. Loose, worn or bent steering/ suspension components.	2. Inspect, tighten or replace components as necessary.
	3. Shock valve.	3. Replace shock.
IMPROPER TRACKING	Loose, worn or bent steering/ suspension components.	Inspect, tighten or replace components as necessary.

WHEEL ALIGNMENT

TABLE OF CONTENTS

page

WHEEL ALIGNMENT
DESCRIPTION 3
OPERATION 3
STANDARD PROCEDURE
STANDARD PROCEDURE - HEIGHT MEASUREMENT 4
STANDARD PROCEDURE - CAMBER AND CASTER ADJUSTMENT 5
STANDARD PROCEDURE - TOE ADJUSTMENT 5
STANDARD PROCEDURE - CAMBER, CASTER AND TOE ADJUSTMENT 5
SPECIFICATIONS
ALIGNMENT 6

WHEEL ALIGNMENT

DESCRIPTION

NOTE: Suspension components with rubber/urethane bushings should be tightened with the vehicle at normal ride height. It is important to have the springs supporting the weight of the vehicle when the fasteners are torqued. If springs are not at their normal ride position, vehicle ride comfort could be affected and premature bushing wear may occur.

Wheel alignment involves the correct positioning of the wheels in relation to the vehicle. The positioning is accomplished through suspension and steering linkage adjustments. An alignment is considered essential for efficient steering, good directional stability and to minimize tire wear. The most important measurements of an alignment are caster, camber and toe (Fig. 1).

CAUTION: Never attempt to modify suspension or steering components by heating or bending.

NOTE: Periodic lubrication of the front suspension/steering system components may be required. Rubber bushings must never be lubricated. Refer to Lubrication And Maintenance for the recommended maintenance schedule.

OPERATION

- **CASTER** is the forward or rearward tilt of the steering knuckle from vertical. Tilting the top of the knuckle forward provides negative caster. Tilting the top of the knuckle rearward provides positive caster. Positive caster promotes directional stability. This angle enables the front wheels to return to a straight ahead position after turns (Fig. 1)
- **CAMBER** is the inward or outward tilt of the wheel relative to the center of the vehicle. Tilting the top of the wheel inward provides negative camber. Tilting the top of the wheel outward provides positive camber. Incorrect camber will cause wear on the inside or outside edge of the tire (Fig. 1)
- **TOE** is the difference between the leading inside edges and trailing inside edges of the front tires. Wheel toe position out of specification cause's unstable steering, uneven tire wear and steering wheel off-center. The wheel toe position is the **final** front wheel alignment adjustment (Fig. 1)
- **THRUST ANGLE** is the angle of the rear axle relative to the centerline of the vehicle. Incorrect thrust angle can cause off-center steering and exces-

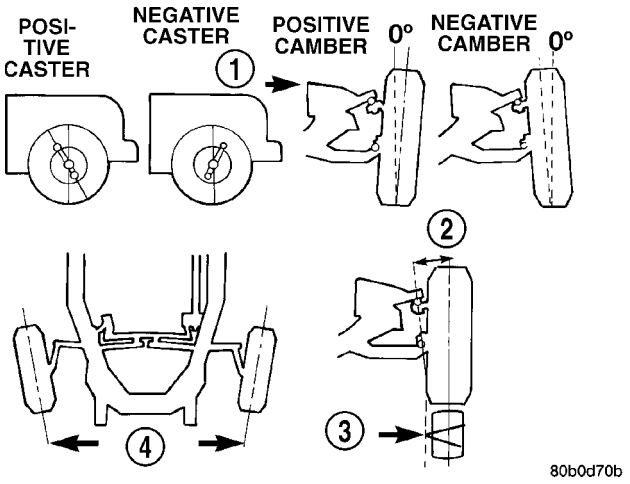

Fig. 1 Wheel Alignment Measurements

1 - FRONT OF VEHICLE
2 - STEERING AXIS INCLINATION
3 - PIVOT POINT
4 - TOE-IN

WHEEL ALIGNMENT (Continued)

sive tire wear. This angle is not adjustable, damaged component(s) must be replaced to correct the thrust angle (Fig. 1)

STANDARD PROCEDURE

STANDARD PROCEDURE - HEIGHT MEASUREMENT

RIDE HEIGHT

NOTE: The suspension is non-adjustable.

The vehicle suspension height should be measured before performing wheel alignment procedure. Also when front suspension components have been replaced. This measure must be performed with the vehicle supporting it's own weight and taken on both sides of the vehicle.

Front and rear ride heights are not adjustable. The spring selections at assembly determine ride height for acceptable appearance of the vehicle. Ride height dimensions assume full fluids (including fuel) and zero passengers. Refer to the table below for front ride height dimensions.

Vehicle ride height audits should be performed utilizing the following procedure:

(1) Drive the vehicle straight and forward on a non-tacky surface for a minimum of 20 feet to neutralize track width.

(2) Bounce the front of the vehicle five times.

(3) Measure and record the dimensions

FRONT RIDE HEIGHT Front ride height is defined by the relative vertical distance between the spindle center line and the rear pivot point of the front lower control arm to cradle attachment. The spindle center line is to be measured at the outer wheel face (point A). The rear pivot point is to be measured at the center of the cam/pivot bolt (point B) at its rearward most end (nut end). (Fig. 2)

REAR RIDE HEIGHT Rear ride height is defined by the relative vertical distance between the top of the lower spring seat strike surface and the bottom of the jounce cup (true metal to metal jounce travel). This is to be measured vertically inside the coil from the point intersecting the inboard edge and the for/aft center of the jounce cup (point C) down to the strike surface (point D). (Fig. 3)

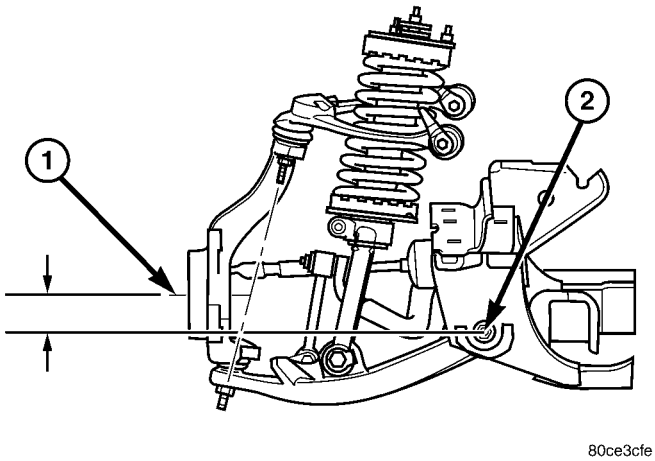

Fig. 2 FRONT RIDE HEIGHT MESUREMENT

1 - POINT - A
2 - POINT - B

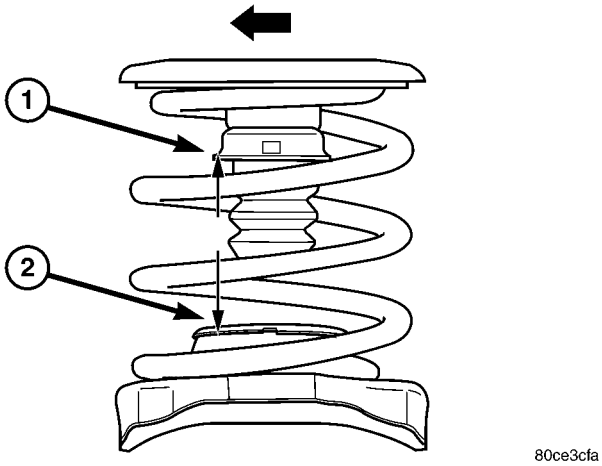

Fig. 3 REAR RIDE HEIGHT MESUREMENT

1 - POINT - C
2 - POINT - D

WHEEL ALIGNMENT (Continued)

Measure-ment	Target	Minimum	Maximum
Front Ride Height Distance AB	66.5 mm Z=996.8 - 930.3 mm	56.5 mm	76.5 mm
Front Cross Ride Height Left - Right	0.0 mm	-10.0 mm	10.0 mm
Rear Ride Height Distance CD	92.1 mm	82.1 mm	102.1 mm
Rear Cross Ride Height Left - Right	0.0 mm	-10.0 mm	10.0 mm

STANDARD PROCEDURE - CAMBER AND CASTER ADJUSTMENT

Camber and caster angle adjustments involve changing the position of the lower control arm cam bolts. (Fig. 4)

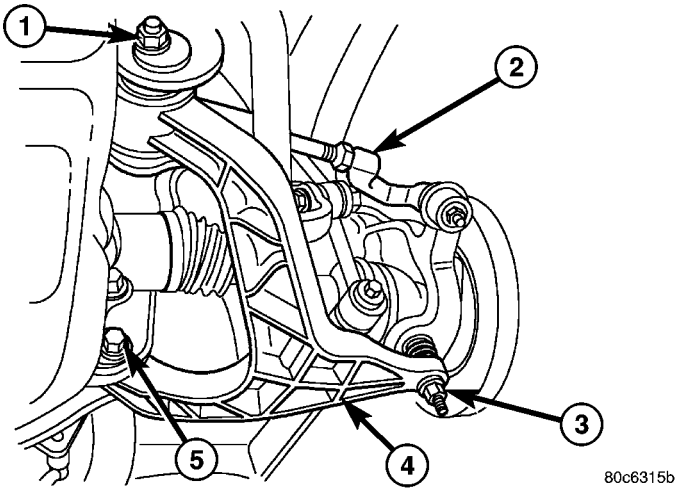

Fig. 4 LOWER CONTROL ARM

1 - FRONT CAM BOLT
2 - OUTER TIE ROD END
3 - LOWER BALL JOINT NUT
4 - LOWER CONTROL ARM
5 - REAR CAM BOLT

STANDARD PROCEDURE - TOE ADJUSTMENT

4X4 SUSPENSION HEIGHT MESUREMENT MUST BE PERFORMED BEFORE AN ALIGNMENT.

The wheel toe position adjustment is the final adjustment.

(1) Start the engine and turn wheels both ways before straightening the wheels. Secure the steering wheel with the front wheels in the straight-ahead position.

(2) Loosen the tie rod jam nuts.

NOTE: Each front wheel should be adjusted for one-half of the total toe position specification. This will ensure the steering wheel will be centered when the wheels are positioned straight-ahead.

(3) Adjust the wheel toe position by turning the tie rod as necessary (Fig. 5).

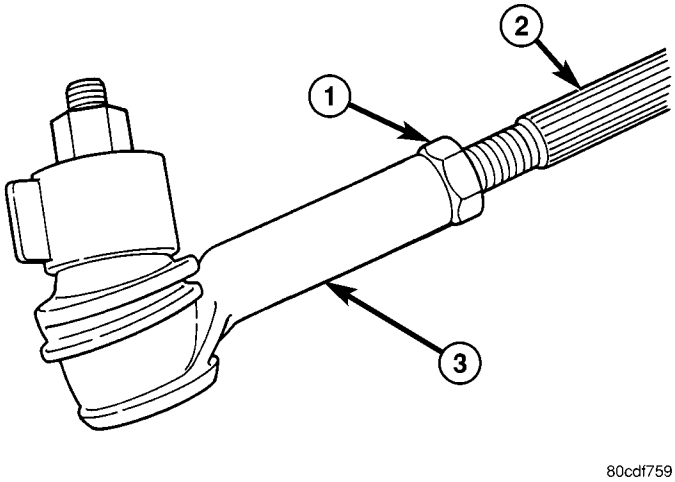

Fig. 5 TIE ROD END

1 - JAM NUT
2 - TIE ROD - INNER
3 - TIE ROD END - OUTER

(4) Tighten the tie rod jam nut to 75 N·m (55 ft. lbs.).

(5) Verify the specifications

(6) Turn off engine.

STANDARD PROCEDURE - CAMBER, CASTER AND TOE ADJUSTMENT

Camber and caster angle adjustments involve changing the position of the lower suspension arm cam bolts. (Fig. 4)

CASTER

Moving the rear position of the cam bolt in or out, will change the caster angle significantly and camber angle only slightly. To maintain the camber angle while adjusting caster, move the rear of the cam bolt in or out. Then move the front of the cam bolt slightly in the opposite direction. (Fig. 4)

To increase positive caster angle, move the rear position of the cam bolt outward (from the engine). Move the front of cam bolt inward (toward the engine) slightly until the original camber angle is obtained. (Fig. 4)

WHEEL ALIGNMENT (Continued)

CAMBER

Move both of the cam bolts together in or out. This will change the camber angle significantly and caster angle slightly. (Fig. 4)

After adjustment is made tighten the cam bolt nuts to proper torque specification.

TOE ADJUSTMENT

The wheel toe position adjustment is the final adjustment.

(1) Start the engine and turn wheels both ways before straightening the wheels. Secure the steering wheel with the front wheels in the straight-ahead position.

(2) Loosen the tie rod jam nuts.

NOTE: Each front wheel should be adjusted for one-half of the total toe position specification. This will ensure the steering wheel will be centered when the wheels are positioned straight-ahead.

(3) Adjust the wheel toe position by turning the tie rod as necessary (Fig. 5).

(4) Tighten the tie rod jam nut to 75 N·m (55 ft. lbs.).

(5) Verify the specifications

(6) Turn off engine.

SPECIFICATIONS

ALIGNMENT

NOTE: Specifications are in degrees.

FRONT

SPECIFICATIONS

DESCRIPTION	SPECIFICATION		
PREFERRED	CASTER 3.9° ± 0.5°	CAMBER -0.375° ± 0.375°	TOTAL TOE-IN .2° ± 0.125°
RANGE	3.4° to + 4.4°	–0.750° to 0°	+0.075° to +0.325°
MAX RT/LT DIFFERENCE	0.5°	0.7°	0.13°

REAR

SPECIFICATIONS

DESCRIPTION	SPECIFICATION		
PREFERRED	CAMBER –.25°± .375°	THRUST ANGLE 0° to ± 0.25°	TOTAL TOE-IN .25° to ± .41°
RANGE	–.625° to .125°	–.25° to +.25°	–.16° to .66°

FRONT

TABLE OF CONTENTS

page

FRONT
DESCRIPTION 7
WARNING 8
SPECIFICATIONS
TORQUE CHART 8
SPECIAL TOOLS
FRONT SUSPENSION 9
BUSHINGS
REMOVAL
REMOVAL - STABILIZER BAR BUSHINGS . . . 10
REMOVAL - LOWER CONTROL ARM BUSHING 10
REMOVAL - CLEVIS BRACKET BUSHING . . . 10
REMOVAL - UPPER CONTROL ARM BUSHINGS 10
INSTALLATION
INSTALLATION - STABILIZER BAR BUSHINGS 10
INSTALLATION - LOWER CONTROL ARM BUSHING 11
INSTALLATION - CLEVIS BRACKET BUSHING 11
INSTALLATION - UPPER CONTROL ARM BUSHINGS 12
HUB / BEARING
REMOVAL 12
INSTALLATION 12
KNUCKLE
REMOVAL 12
INSTALLATION 13
LOWER BALL JOINT
DIAGNOSIS AND TESTING - LOWER BALL JOINT 13
REMOVAL 13
INSTALLATION 14
LOWER CONTROL ARM
REMOVAL 14
INSTALLATION 15
SHOCK
REMOVAL
REMOVAL - LEFT SIDE 15
REMOVAL - RIGHT SIDE 15
INSTALLATION
INSTALLATION - LEFT SIDE 16
INSTALLATION - RIGHT SIDE 16
SPRING
REMOVAL 17
INSTALLATION 17
CLEVIS BRACKET
REMOVAL 17
INSTALLATION 17
STABILIZER BAR
REMOVAL 18
INSTALLATION 18
STABILIZER LINK
REMOVAL 18
INSTALLATION 18
UPPER CONTROL ARM
REMOVAL
REMOVAL - RIGHT SIDE 18
REMOVAL - LEFT SIDE 19
INSTALLATION
INSTALLATION - RIGHT SIDE 19
INSTALLATION - LEFT SIDE 19

FRONT

DESCRIPTION

NOTE: Suspension components with rubber/urethane bushings should be tightened with the vehicle at normal ride height. It is important to have the springs supporting the weight of the vehicle when the fasteners are torqued. If springs are not at their normal ride position, vehicle ride comfort could be affected and premature bushing wear may occur.

The front suspension is designed to allow each wheel to adapt to different road surfaces independently. The wheels are mounted to hub bearings on the steering knuckle spindles. The double-row hub bearings are sealed and lubricated for life. The steering knuckles turn (pivot) on ball joints integral to the outboard portion of the upper control arms and pressed into the lower steering knuckle. The ball joints are lubricated for life. (Fig. 1)

FRONT (Continued)

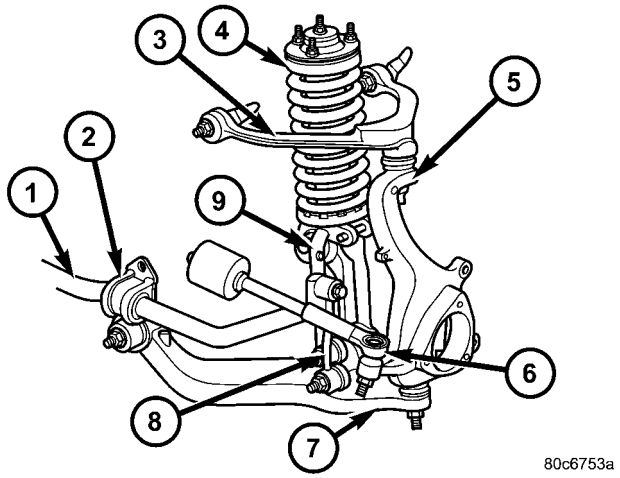

Fig. 1 FRONT SUSPENSION

1 - SWAY BAR
2 - SWAY BAR BUSHING/BRACKET
3 - UPPER CONTROL ARM
4 - SPRING / SHOCK ASSEMBLY
5 - STEERING KNUCKLE
6 - OUTER TIE ROD END
7 - LOWER CONTROL ARM
8 - SWAY BAR LINK
9 - CLEVIS BRACKET

WARNING

WARNING: Suspension components with rubber bushings must be tightened with the vehicle at normal ride height. It is important to have the springs supporting the weight of the vehicle when the fasteners are torqued. If springs are not at their normal ride position, vehicle ride comfort will be affected and cause premature bushing wear.

SPECIFICATIONS

TORQUE CHART

TORQUE SPECIFICATIONS

DESCRIPTION	N·m	Ft. Lbs.	In. Lbs.
Front Shock Absorber Clevis Bracket Upper Nut	136	100	—
Front Shock Absorber Clevis Bracket Lower Nut	150	110	—
Front Shock Absorber Top (4) Mounting Nuts	108	80	—
Front Shock to Spring and Insulator Nut	41	30	—
Upper Suspension Arm Front Nut	122	90	—
Upper Suspension Arm Rear Nut	122	90	—
Lower Suspension Arm Front Nut	170	125	—
Lower Suspension Arm Rear Nut	170	125	—
Stabilizer Bar Clamp Nut	149	110	—

FRONT (Continued)

DESCRIPTION	N·m	Ft. Lbs.	In. Lbs.
Stabilizer Bar Link Upper Nut	136	100	—
Stabilizer Bar Link Lower Nut	115	85	—
Hub/Bearing Bolt	130	96	—
Hub/Bearing Halfshaft Nut	135	100	—
Upper Ball Joint Nut	81	60	—
Lower Ball Joint Nut	81	60	—
Wheel Speed Sensor	13.5	10	—

SPECIAL TOOLS

FRONT SUSPENSION

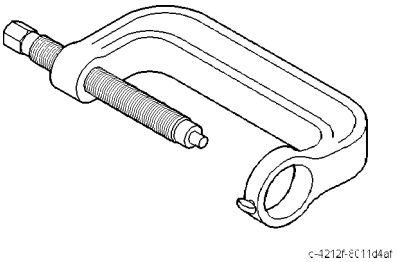

BALL JOINT PRESS - C-4212F

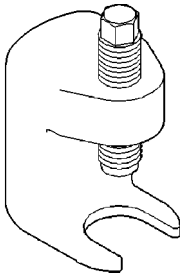

Remover C-4150A

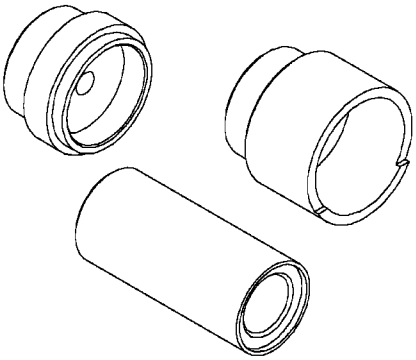

REMOVER / INSTALLER FRONT LOWER BALL JOINT - 8859

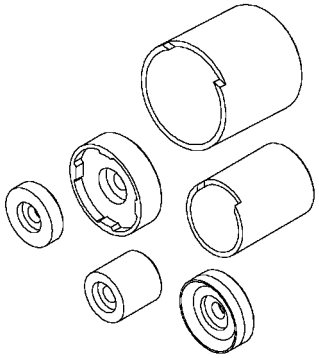

FRONT LOWER CONTROL ARM & CLEVIS BUSHING REMOVER/INSTALLER - 8858

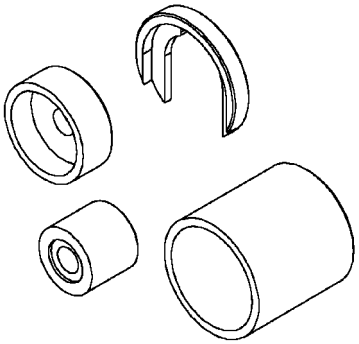

FRONT LOWER CONTROL BUSHING REMOVER/ INSTALLER - 8830

BUSHINGS

REMOVAL

REMOVAL - STABILIZER BAR BUSHINGS

(1) Raise vehicle on hoist.
(2) Remove the stabilizer bushing clamps.
(3) Remove the stabilizer bushings from the stabilizer bar.

REMOVAL - LOWER CONTROL ARM BUSHING

(1) Remove the lower control arm (Refer to 2 - SUSPENSION/FRONT/LOWER CONTROL ARM - REMOVAL).
(2) Secure the control arm in a vise.

NOTE: Extreme pressure lubrication must be used on the threaded portions of the tool. This will increase the longevity of the tool and insure proper operation during the removal and installation process.

(3) Press the bushing out using special tools 8858-5 (Receiver), 8858-6 (Driver) and 8839 with the threaded rod and the bearing as shown (Fig. 2)

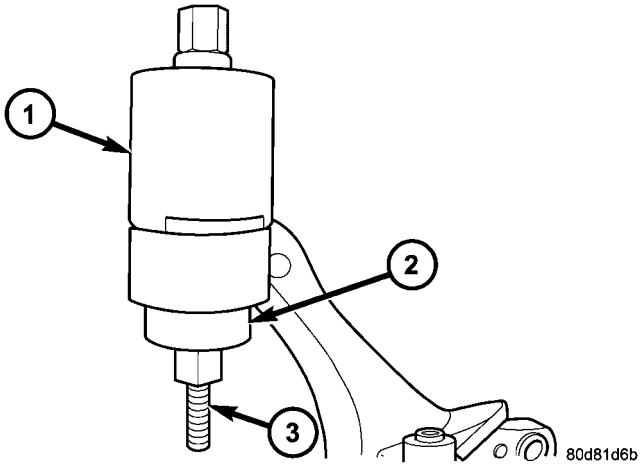

Fig. 2 LOWER CONTROL ARM BUSHING - REMOVAL

1 - 8858-5 RECEIVER
2 - 8858-6 DRIVER
3 - 8839 THREADED ROD

REMOVAL - CLEVIS BRACKET BUSHING

(1) Remove the clevis bracket from the shock (Refer to 2 - SUSPENSION/FRONT/CLEVIS BRACKET - REMOVAL).

NOTE: Extreme pressure lubrication must be used on the threaded portions of the tool. This will increase the longevity of the tool and insure proper operation during the removal and installation process.

(2) Press the bushing out using special tools 8858-1 (receiver), 8858-3 (driver) and 8839 with the threaded rod 8839 and the bearing as shown (Fig. 3)

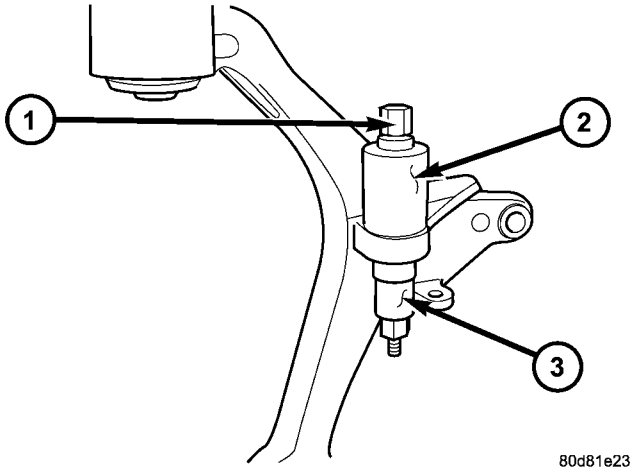

Fig. 3 CLEVIS BRACKET BUSHING

1 - 8839 THREADED ROD
2 - 8858-1 RECEIVER
3 - 8858-3 DRIVER

REMOVAL - UPPER CONTROL ARM BUSHINGS

(1) Remove the upper control arm (Refer to 2 - SUSPENSION/FRONT/UPPER CONTROL ARM - REMOVAL).
(2) Secure the control arm in a vise.

NOTE: Extreme pressure lubrication must be used on the threaded portions of the tool. This will increase the longevity of the tool and insure proper operation during the removal and installation process.

(3) Install bushing remover tools 8830-3 (Adapter), 8830-2 (Receiver) and 8830–4 (Driver) with the threaded rod 8838 and the bearing as shown (Fig. 4)
(4) Press out the bushing.

INSTALLATION

INSTALLATION - STABILIZER BAR BUSHINGS

(1) Install the stabilizer bushings to the stabilizer bar.
(2) Install the stabilizer bushing clamps. Tighten the nuts to 149 N·m (110 ft.lbs.).
(3) Lower the vehicle.

BUSHINGS (Continued)

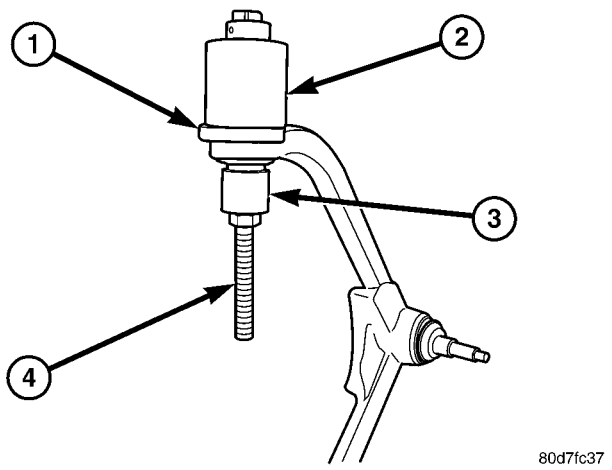

Fig. 4 UPPER CONTROL ARM BUSHING REMOVAL

1 - 8830-3 (ADAPTER)
2 - 8830-2 (RECIEVER)
3 - 8830-4 (DRIVER)
4 - 8838 (THREADED ROD)

INSTALLATION - LOWER CONTROL ARM BUSHING

NOTE: Extreme pressure lubrication must be used on the threaded portions of the tool. This will increase the longevity of the tool and insure proper operation during the removal and installation process.

(1) Install the new lower control arm bushings into the lower control arm using tools 8858-5 (driver), 8858-6 (receiver) and the bearing with the threaded rod 8839 (Fig. 5) making sure to properly orient the bushing in the control.

(2) Remove the control arm from the vise.

(3) Install the lower control arm (Refer to 2 - SUSPENSION/FRONT/LOWER CONTROL ARM - INSTALLATION).

(4) Reset the vehicle ride height (Refer to 2 - SUSPENSION/WHEEL ALIGNMENT - STANDARD PROCEDURE).

(5) Perform a wheel alignment (Refer to 2 - SUSPENSION/WHEEL ALIGNMENT - STANDARD PROCEDURE).

INSTALLATION - CLEVIS BRACKET BUSHING

NOTE: Extreme pressure lubrication must be used on the threaded portions of the tool. This will increase the longevity of the tool and insure proper operation during the removal and installation process.

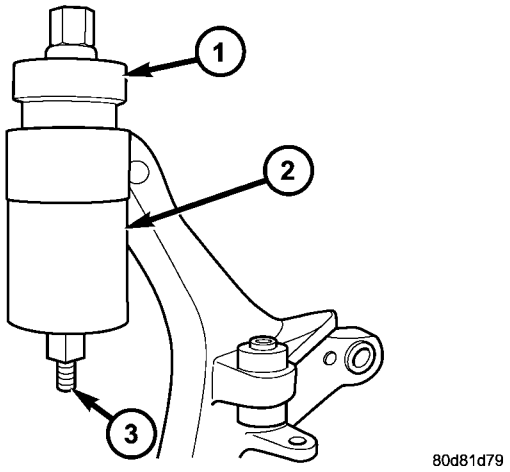

Fig. 5 LOWER CONTROL ARM BUSHING - INSTALLATION

1 - 8858-5 DRIVER
2 - 8858-6 RECEIVER
3 - 8839 THREADED ROD

(1) Install the new clevis bracket bushing into the lower control arm using tools 8858-2 (driver), 8858-1 (receiver) and the bearing with the threaded rod 8839 (Fig. 6) making sure to properly orient the bushing in the control.

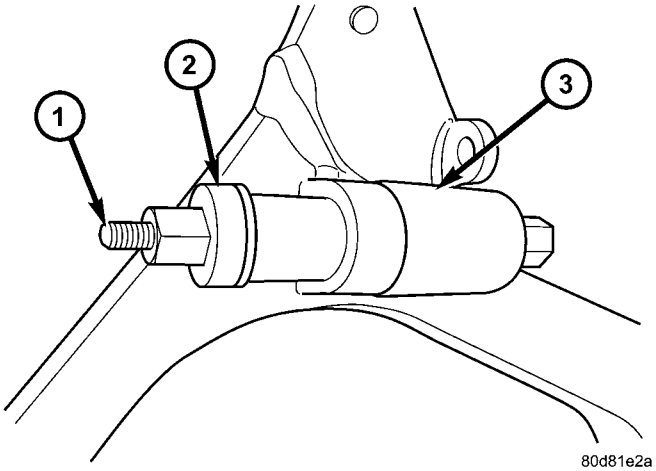

Fig. 6 CLEVIS BRACKET BUSHING

1 - 8839 THREADED ROD
2 - 8858-2 DRIVER
3 - 8858-1 RECEIVER

(2) Install the clevis bracket (Refer to 2 - SUSPENSION/FRONT/CLEVIS BRACKET - INSTALLATION).

BUSHINGS (Continued)

INSTALLATION - UPPER CONTROL ARM BUSHINGS

NOTE: Extreme pressure lubrication must be used on the threaded portions of the tool. This will increase the longevity of the tool and insure proper operation during the removal and installation process.

(1) Install the new upper control arm bushings into the upper control arm using tools 8830-3 (Adapter), 8830-1 (Driver) and 8830-2 (Receiver) the bearing with the threaded rod 8838 (Fig. 7) making sure to properly orient the bushing in the control arm.

(2) Remove the control arm from the vise.

(3) Install the upper control arm (Refer to 2 - SUSPENSION/FRONT/UPPER CONTROL ARM - INSTALLATION).

(4) Reset the vehicle ride height (Refer to 2 - SUSPENSION/WHEEL ALIGNMENT - STANDARD PROCEDURE).

(5) Perform a wheel alignment (Refer to 2 - SUSPENSION/WHEEL ALIGNMENT - STANDARD PROCEDURE).

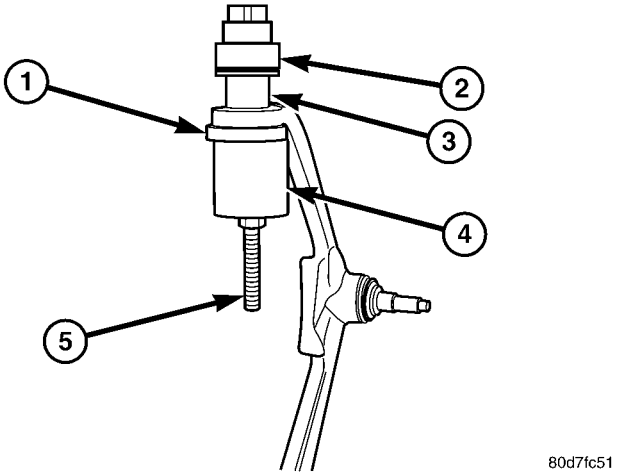

Fig. 7 UPPER CONTROL ARM BUSHING - INSTALLATION

1 - 8830-3 (ADAPTER)
2 - 8830-1 (DRIVER)
3 - BUSHING
4 - 8830-2 (RECEIVER)
5 - 8838 (THREADED ROD)

HUB / BEARING

REMOVAL

(1) Raise and support the vehicle.

(2) Remove the tire and wheel assembly.

(3) Remove the caliper adapter (Refer to 5 - BRAKES/HYDRAULIC/MECHANICAL/DISC BRAKE CALIPERS - REMOVAL).

CAUTION: Never allow the disc brake caliper to hang from the brake hose. Damage to the brake hose will result. Provide a suitable support to hang the caliper securely.

(4) Remove the disc brake rotor (Refer to 5 - BRAKES/HYDRAULIC/MECHANICAL/ROTORS - REMOVAL).

(5) Remove the wheel speed sensor (Refer to 5 - BRAKES/ELECTRICAL/FRONT WHEEL SPEED SENSOR - REMOVAL).

(6) Remove the bracket securing the wheel speed sensor wire.

(7) Remove the axle shaft nut. (if equipped with four wheel drive)

(8) Remove the three mounting bolts for the hub/bearing assembly.

(9) Remove the hub/bearing.

INSTALLATION

(1) Install the hub/bearing assembly to the vehicle.

(2) Install the three mounting bolts for the hub/bearing. Tighten the bolt to 130 N·m (96 ft.lbs.).

(3) Install the axle shaft nut. Tighten the nut to 135 N·m (100 ft.lbs.). (if equipped with four wheel drive)

(4) Install the bracket to the wheel speed sensor wire.

(5) Install the wheel speed sensor to the hub. Tighten the bolt to 13.5 N·m (10 ft.lbs.) (Refer to 5 - BRAKES/ELECTRICAL/FRONT WHEEL SPEED SENSOR - INSTALLATION).

(6) Install the disc brake rotor (Refer to 5 - BRAKES/HYDRAULIC/MECHANICAL/ROTORS - INSTALLATION).

(7) Install the disc brake caliper adapter. Tighten the nut to 135 N·m (100 ft.lbs.) (Refer to 5 - BRAKES/HYDRAULIC/MECHANICAL/ROTORS - INSTALLATION).

(8) Install the tire and wheel assembly. (Refer to 22 - TIRES/WHEELS/WHEELS - STANDARD PROCEDURE).

KNUCKLE

REMOVAL

(1) Raise and support the vehicle.

(2) Remove the tire and wheel assembly.

(3) Remove the caliper adapter. (Refer to 5 - BRAKES/HYDRAULIC/MECHANICAL/DISC BRAKE CALIPER ADAPTER - REMOVAL).

KNUCKLE (Continued)

CAUTION: Never allow the disc brake caliper to hang from the brake hose. Damage to the brake hose will result. Provide a suitable support to hang the caliper securely.

(4) Remove the disc brake rotor. (Refer to 5 - BRAKES/HYDRAULIC/MECHANICAL/ROTORS - REMOVAL).
(5) Remove the wheel speed sensor. (Refer to 5 - BRAKES/ELECTRICAL/FRONT WHEEL SPEED SENSOR - REMOVAL).
(6) Remove the axle shaft nut. (if equipped with four wheel drive)
(7) Remove the hub/bearing. (Refer to 2 - SUSPENSION/FRONT/HUB / BEARING - REMOVAL).
(8) Seperate the outer tie rod end from the steering knuckle. (Refer to 19 - STEERING/LINKAGE/TIE ROD END - REMOVAL).
(9) Remove the lower ball joint nut.
(10) Seperate the lower ball joint from the suspension arm using tool C–4150A.
(11) Remove the upper ball joint nut.
(12) Seperate the upper ball joint from the knuckle using tool C–4150A.
(13) Remove the knuckle from the vehicle.

INSTALLATION

(1) Install the knuckle to the vehicle.
(2) Install the upper ball joint nut. Tighten the nut to 81 N·m (60 ft.lbs.).
(3) Install the lower ball joint nut. Tighten the nut to 81 N·m (60 ft.lbs.).
(4) Install the outer tie rod end to the steering knuckle. (Refer to 19 - STEERING/LINKAGE/TIE ROD END - INSTALLATION).
(5) Install the hub/bearing. (Refer to 2 - SUSPENSION/FRONT/HUB / BEARING - INSTALLATION).
(6) Install the axle shaft nut. Tighten the nut to 135 N·m (96 ft.lbs.).(if equipped with four wheel drive).
(7) Install the wheel speed sensor. (Refer to 5 - BRAKES/ELECTRICAL/FRONT WHEEL SPEED SENSOR - INSTALLATION).
(8) Install the disc brake rotor. (Refer to 5 - BRAKES/HYDRAULIC/MECHANICAL/ROTORS - INSTALLATION).
(9) Install the caliper adapter. (Refer to 5 - BRAKES/HYDRAULIC/MECHANICAL/DISC BRAKE CALIPER ADAPTER - INSTALLATION).
(10) Install the tire and wheel assembly. (Refer to 22 - TIRES/WHEELS/WHEELS - STANDARD PROCEDURE).
(11) Perform the set toe procedure (Refer to 2 - SUSPENSION/WHEEL ALIGNMENT - STANDARD PROCEDURE).

LOWER BALL JOINT

DIAGNOSIS AND TESTING - LOWER BALL JOINT

(1) Raise the vehicle on a drive-on hoist.

NOTE: If a drive-on hoist is not available, use wooden blocks with jack stands to support the lower control arm in the ball joint area. Place the jack stands appropriately and lower the hoist placing weight on the lower control arm. The lower control arms should now be supporting the vehicle weight.

(2) With the use of jack stands, lift the front end off the hoist and position wooden blocks underneath both lower control arms supporting the vehicles weight.
(3) Remove the tire and wheel assembly.
(4) Attach a dial indicator to the base of the lower control arm and align the dial indicator's contact point with the direction of the stud axis, touch the machined flat on the knuckle and zero the dial indicator. (Fig. 8)

NOTE: Use care when applying the load to the knuckle, so the parts are not damaged using care not to tear the boot.

(5) From the front of the vehicle, insert a pry bar to get it rested on the lower control arm and use lever principle to push the knuckle up until the arm of the dial indicator no longer moves.
(6) Record the ball joint movement on each side of the vehicle. The end play is acceptable with no more than 1.5mm of end play back to back.

REMOVAL

(1) Remove the tire and wheel assembly.
(2) Remove the brake caliper and rotor (Refer to 5 - BRAKES/HYDRAULIC/MECHANICAL/ROTORS - REMOVAL).
(3) Disconnect the tie rod from the steering knuckle (Refer to 19 - STEERING/LINKAGE/TIE ROD END - REMOVAL).
(4) Remove the steering knuckle (Refer to 2 - SUSPENSION/FRONT/KNUCKLE - REMOVAL).
(5) Move the halfshaft to the side and support the halfshaft out of the way (If Equipped).

NOTE: Extreme pressure lubrication must be used on the threaded portions of the tool. This will increase the longevity of the tool and insure proper operation during the removal and installation process.

(6) Secure the steering knuckle in a vise.

LOWER BALL JOINT (Continued)

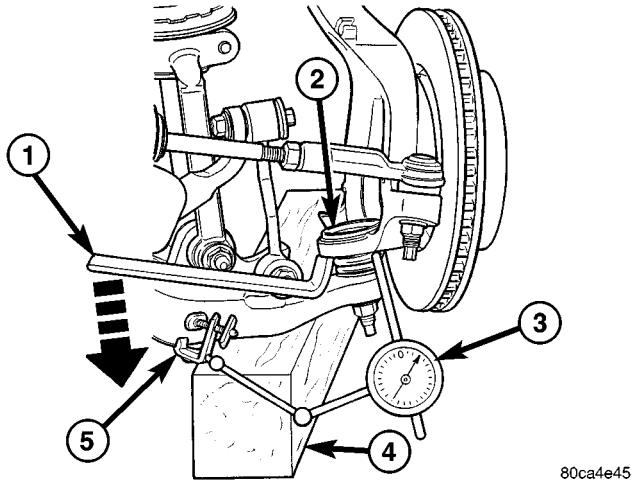

Fig. 8 SUSPENSION IN THE CURB POSITION

1 - PRY BAR
2 - BALL JOINT
3 - DIAL INDICATOR
4 - WOODEN BLOCK OR SUPPORT
5 - CLAMP

(7) Remove the ball joint boot.

(8) Press the ball joint from the steering knuckle using special tools C-4212–F (PRESS), 8859-2 (RECEIVER) and 8859-1 (DRIVER) (Fig. 9).

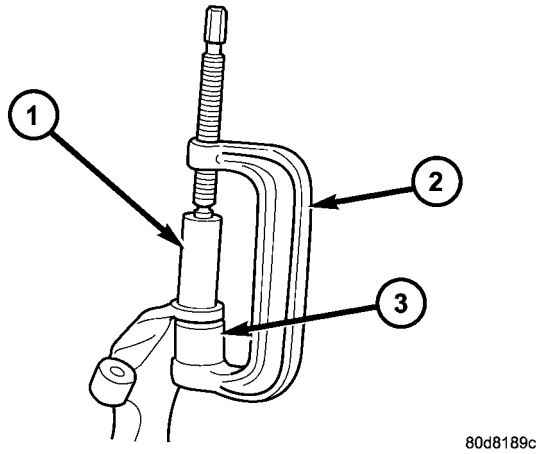

Fig. 9 LOWER BALL JOINT

1 - 8859-1 DRIVER
2 - C-4212F PRESS
3 - 8859-2 RECEIVER

INSTALLATION

NOTE: Extreme pressure lubrication must be used on the threaded portions of the tool. This will increase the longevity of the tool and insure proper operation during the removal and installation process.

(1) Install the ball joint into the steering knuckle and press in using special tools C-4212–F (press), 8859-3 (driver) and 6761 (receiver) (Fig. 10).

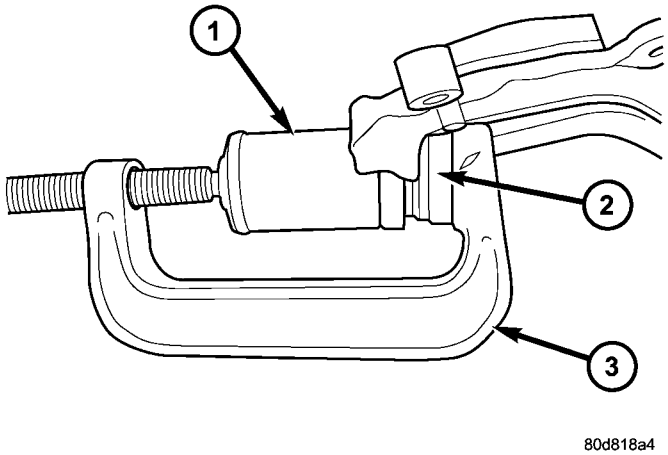

Fig. 10 LOWER BALL JOINT

1 - 6761 RECEIVER
2 - 8859-3 DRIVER
3 - C-4212F PRESS

(2) Install the ball joint boot.

(3) Remove the support for the halfshaft and install into position (If Equipped).

(4) Install the steering knuckle (Refer to 2 - SUSPENSION/FRONT/KNUCKLE - INSTALLATION).

(5) Install the tie rod end into the steering knuckle (Refer to 19 - STEERING/LINKAGE/TIE ROD END - INSTALLATION).

(6) Install and tighten the halfshaft nut to 136 N·m (100 ft. lbs.).

(7) Install the brake caliper and rotor (Refer to 5 - BRAKES/HYDRAULIC/MECHANICAL/ROTORS - INSTALLATION).

(8) Install the tire and wheel assembly (Refer to 22 - TIRES/WHEELS/WHEELS - STANDARD PROCEDURE).

(9) Check the vehicle ride height (Refer to 2 - SUSPENSION/WHEEL ALIGNMENT - STANDARD PROCEDURE).

(10) Perform a wheel alignment (Refer to 2 - SUSPENSION/WHEEL ALIGNMENT - STANDARD PROCEDURE).

LOWER CONTROL ARM

REMOVAL

(1) Raise and support the vehicle.

(2) Remove the tire and wheel assembly.

(3) Remove the lower clevis bracket bolt at the lower control arm.

LOWER CONTROL ARM (Continued)

(4) Remove the stabilizer link bolt at the lower control arm.

(5) Remove the lower ball joint nut.

(6) Separate the lower ball joint from the lower control arm using tool C-4150A.

NOTE: Marking the lower control arm pivot bolts front and rear will aid in the assembly procedure.

(7) Mark the lower control arm pivot bolts front and rear.

(8) Remove the front cam/pivot bolt. (Fig. 11)

(9) Remove the rear cam/pivot bolt. (Fig. 11)

(10) Remove the lower control arm from the vehicle.

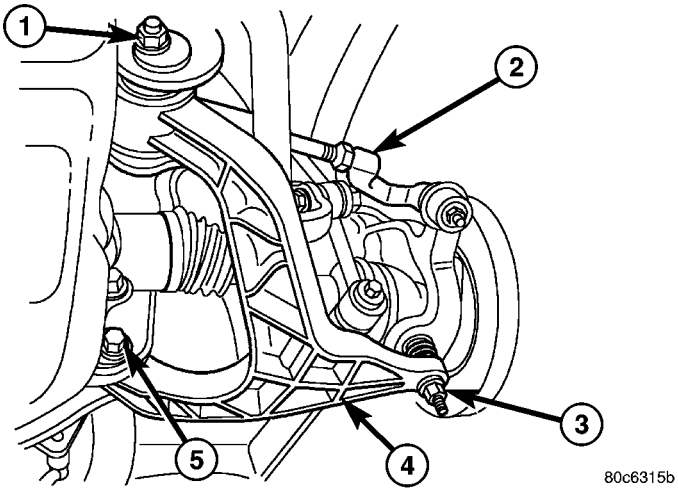

Fig. 11 LOWER CONTROL ARM

1 - FRONT CAM BOLT
2 - OUTER TIE ROD END
3 - LOWER BALL JOINT NUT
4 - LOWER CONTROL ARM
5 - REAR CAM BOLT

INSTALLATION

(1) Install the lower control arm to the vehicle.

(2) Install the rear cam/pivot bolt.

(3) Install the front cam/pivot bolt.

(4) Install the lower ball joint nut. Tighten the nut to 81 N·m (60 ft.lbs.)

(5) Align the marks front and rear at the cam/pivot bolts and tighten the nuts. Tighten the nuts to 170 N·m (125 ft.lbs.)

(6) Install the stabilizer link bolt at the lower control arm. Tighten the nut to 136 N·m (100 ft.lbs.)

(7) Install the lower clevis bracket bolt at the lower control arm. Tighten the nut to 150 N·m (110 ft.lbs.)

(8) Install the tire and wheel assembly. (Refer to 22 - TIRES/WHEELS/WHEELS - STANDARD PROCEDURE).

(9) Perform a full wheel alignment (Refer to 2 - SUSPENSION/WHEEL ALIGNMENT - STANDARD PROCEDURE).

SHOCK

REMOVAL

REMOVAL - LEFT SIDE

(1) Disconnect the battery.

(2) Remove the battery (Refer to 8 - ELECTRICAL/BATTERY SYSTEM/BATTERY - REMOVAL).

(3) Unclip the power center and move it to the side out of the way.

(4) Remove the battery tray (Refer to 8 - ELECTRICAL/BATTERY SYSTEM/TRAY - REMOVAL).

(5) Disconnect the battery temperature sensor from the battery tray.

(6) Remove the four upper shock mounting nuts.

(7) Raise and support the vehicle.

(8) Remove the left tire and wheel assembly.

(9) Remove the lower bolt at the lower control securing the clevis bracket.

(10) Remove the stabilizer link (Refer to 2 - SUSPENSION/FRONT/STABILIZER LINK - REMOVAL).

(11) Remove the lower ball joint nut.

(12) Seperate the lower ball joint from the lower control arm using tool C-4150A.

(13) Rotate the lower control arm downward to allow access.

(14) Remove the clevis bracket at the shock.

(15) Remove the shock assembly from the vehicle. (Fig. 12)

(16) Remove the spring from the shock (if needed).

REMOVAL - RIGHT SIDE

(1) Remove the air box (Refer to 9 - ENGINE/AIR INTAKE SYSTEM/AIR CLEANER ELEMENT - REMOVAL).

(2) Remove the two cruise control servo mounting nuts.

(3) Remove the upper shock mounting nuts.

(4) Raise and support the vehicle.

(5) Remove the right side tire assembly.

(6) Remove the lower bolt at the lower control securing the clevis bracket.

(7) Remove the stabilizer link (Refer to 2 - SUSPENSION/FRONT/STABILIZER LINK - REMOVAL).

(8) Remove the lower ball joint nut.

(9) Seperate the lower ball joint from the lower control arm using tool C-4150A.

(10) Rotate the lower control arm downward to allow access.

(11) Remove the clevis bracket at the shock. (Fig. 13)

SHOCK (Continued)

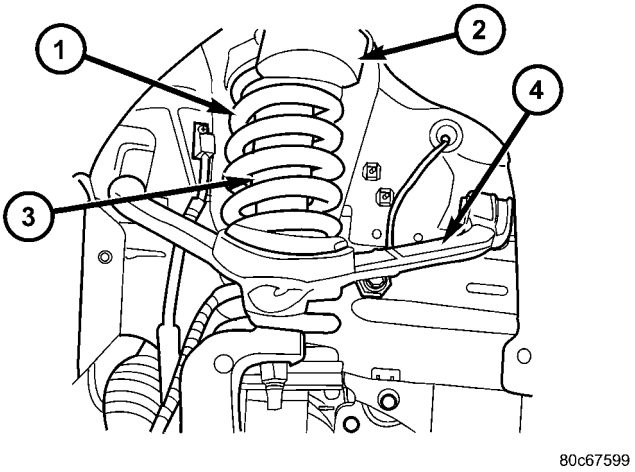

Fig. 12 SHOCK ASSEMBLY

1 - SPRING
2 - JOUNCE BUMPER
3 - SHOCK
4 - UPPER CONTROL ARM

(12) Remove the shock assembly from the vehicle. (Fig. 13)

(13) Remove the spring from the shock (if needed). (Refer to 2 - SUSPENSION/FRONT/SPRING - REMOVAL).

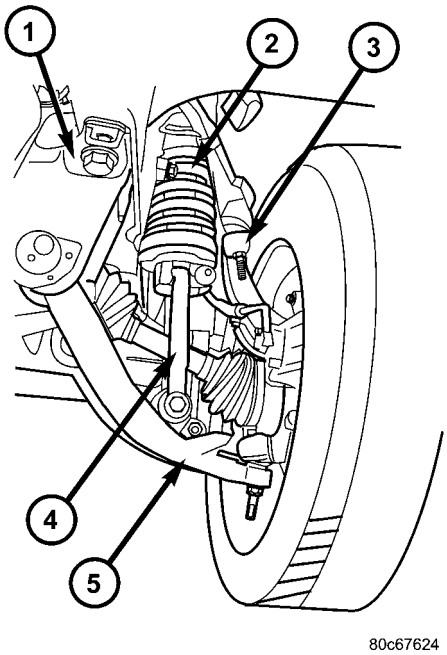

Fig. 13 SHOCK & CLEVIS ASSEMBLY

1 - FRONT CRADLE
2 - SPRING & SHOCK ASSEMBLY
3 - STEERING KNUCKLE
4 - CLEVIS BRACKET
5 - LOWER CONTROL ARM

INSTALLATION

INSTALLATION - LEFT SIDE

(1) Install the spring to the shock (if removed).

(2) Install the shock assembly to the vehicle.

(3) Install the four upper shock mounting nuts. Tighten the nuts to 108 N·m (80 ft.lbs.).

(4) Install the clevis bracket at the shock. (Refer to 2 - SUSPENSION/FRONT/CLEVIS BRACKET - INSTALLATION). Tighten the bolt to 88 N·m (65 ft.lbs.).

(5) Raise the lower control into place and reconnect the lower ball joint nut. Tighten the nut to 81 N·m (60 ft.lbs.).

(6) Install the clevis bracket at the lower control arm. (Refer to 2 - SUSPENSION/FRONT/CLEVIS BRACKET - INSTALLATION). Tighten the bolt to 150 N·m (110 ft.lbs.).

(7) Install the lower stabilizer link at the lower control arm. Tighten the bolt to 136 N·m (100 ft.lbs.) (Refer to 2 - SUSPENSION/FRONT/STABILIZER LINK - INSTALLATION).

(8) Install the left tire and wheel assembly. (Refer to 22 - TIRES/WHEELS/WHEELS - STANDARD PROCEDURE).

(9) Lower the vehicle.

(10) Reconnect the battery temperature sensor.

(11) Install the battery tray (Refer to 8 - ELECTRICAL/BATTERY SYSTEM/TRAY - INSTALLATION).

(12) Install the battery (Refer to 8 - ELECTRICAL/BATTERY SYSTEM/BATTERY - INSTALLATION).

(13) Reconnect the battery cables.

INSTALLATION - RIGHT SIDE

(1) Install the spring to the shock (if removed). (Refer to 2 - SUSPENSION/FRONT/SPRING - INSTALLATION).

(2) Install the shock assembly to the vehicle.

(3) Install the four upper shock mounting nuts. Tighten the nuts to 108 N·m (80 ft.lbs.).

(4) Install the clevis bracket at the shock. (Refer to 2 - SUSPENSION/FRONT/CLEVIS BRACKET - INSTALLATION). Tighten the bolt to 88 N·m (65 ft.lbs.).

(5) Raise the lower control into place and reconnect the lower ball joint nut. Tighten the nut to 81 N·m (60 ft.lbs.).

(6) Install the clevis bracket at the lower control arm. (Refer to 2 - SUSPENSION/FRONT/CLEVIS BRACKET - INSTALLATION). Tighten the bolt to 150 N·m (110 ft.lbs.).

(7) Install the lower stabilizer link at the lower control arm. Tighten the bolt to 136 N·m (100 ft.lbs.)

SHOCK (Continued)

(Refer to 2 - SUSPENSION/FRONT/STABILIZER LINK - INSTALLATION).

(8) Install the right tire and wheel assembly. (Refer to 22 - TIRES/WHEELS/WHEELS - STANDARD PROCEDURE).

(9) Lower the vehicle.

(10) Install the cruise control servo mounting nuts.

(11) Install the airbox (Refer to 9 - ENGINE/AIR INTAKE SYSTEM/AIR CLEANER ELEMENT - INSTALLATION).

SPRING

REMOVAL

(1) Raise and support the vehicle.

(2) Remove the tire and wheel assembly.

(3) Remove the shock. Refer to the proper side shock removal procedure being worked on. (Refer to 2 - SUSPENSION/FRONT/SHOCK - REMOVAL).

(4) Secure the shock assembly into a Pentastar Service Equipment W-7200 Spring compressor. (Fig. 14)

(5) Compress the spring.

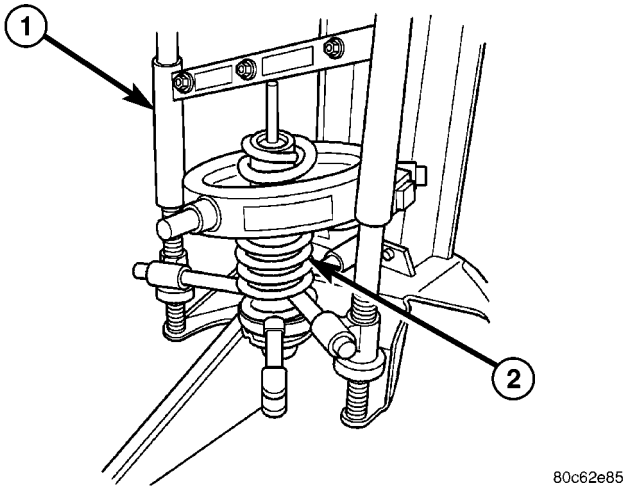

Fig. 14 SPRING COMPRESSOR

1 - SPRING COMPRESSOR
2 - SPRING

(6) Remove the shock mount nut.

(7) Remove the shock from the spring compressor.

(8) Transfer the necessary parts to the type of repair being done (Insulator, Spring, shock and mount).

INSTALLATION

(1) Install the shock to the spring and spring compressor, After the transfer of the necessary parts to the type of repair being done (Insulator, Spring, shock and mount).

(2) Install the shock mounting nut. Tighten the bolt to 41 N·m (30 ft.lbs.).

(3) Loosen the compressed spring.

(4) Remove the shock assembly from the spring compressor.

(5) Install the shock to the vehicle. (Refer to 2 - SUSPENSION/FRONT/SHOCK - INSTALLATION).

(6) Install the tire and wheel assembly. (Refer to 22 - TIRES/WHEELS/WHEELS - STANDARD PROCEDURE).

(7) Remove the support and lower the vehicle.

CLEVIS BRACKET

REMOVAL

(1) Raise and support the vehicle.

(2) Remove the tire and wheel assembly.

(3) Remove the lower clevis bolt at the lower control arm. (Fig. 15)

(4) Remove the upper clevis bolt at the shock. (Fig. 15)

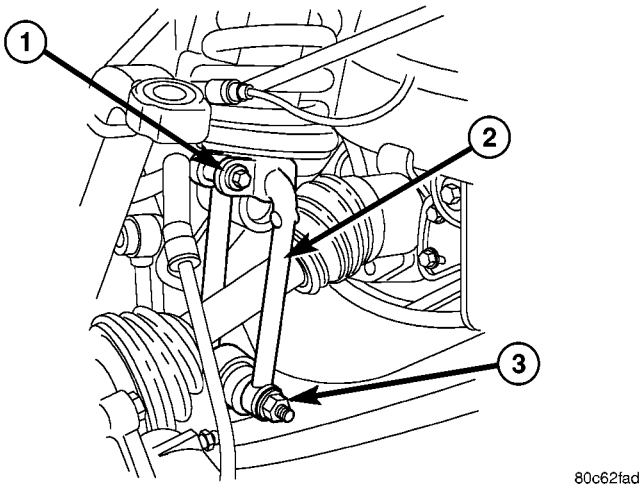

Fig. 15 CLEVIS BRACKET

1 - UPPER BOLT
2 - CLEVIS BRACKET
3 - LOWER BOLT

(5) Remove the lower stabilizer link bolt at the lower control arm.

(6) Remove the lower ball joint nut.

(7) Seperate the lower ball joint from the lower control arm using tool C-4150A.

(8) Swing the lower control arm downward to allow clearence to remove the clevis braket.

(9) Remove the clevis bracket from the vehicle.

INSTALLATION

(1) Install the clevis bracket to the shock **Seat the clevis against the stop on the shock**. Tighten the bolt to 136 N·m (100 ft.lbs.) (Fig. 15).

CLEVIS BRACKET (Continued)

(2) Raise the lower control arm to the lower ball joint.

(3) Install the nut to the lower ball joint. Tighten the nut to 81 N·m (60 ft.lbs.).

(4) Install the clevis bracket to the lower control arm. Tighten the bolt to 150 N·m (110 ft.lbs.).

(5) Install the lower stabilizer link bolt at the lower control arm. Tighten the bolt to 115 N·m (85 ft.lbs.).

(6) Install the tire and wheel assembly. (Refer to 22 - TIRES/WHEELS/WHEELS - STANDARD PROCEDURE).

(7) Lower the vehicle.

STABILIZER BAR

REMOVAL

(1) Raise and support the vehicle.

(2) Remove the tire and wheel assembly.

(3) Remove the upper stabilizer link bolts at the stabilizer bar.

(4) Remove the stabilizer bar bushing clamps from the frame (Fig. 16).

(5) Remove the stabilizer bar from the vehicle.

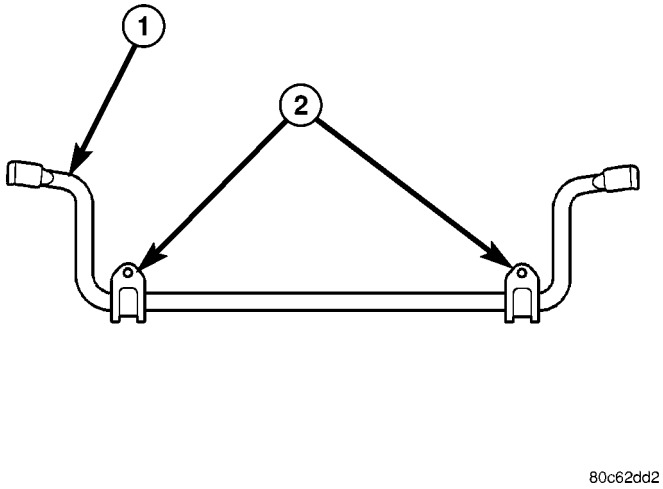

Fig. 16 SWAY BAR

1 - SWAY BAR
2 - SWAY BAR BUSHINGS

INSTALLATION

(1) Install the stabilizer bar to the vehicle.

(2) Install the stabilizer bar bushing clamps (Fig. 16). Tighten the nuts to 149 N·m (110 ft.lbs.).

(3) Install the upper stabilizer link bolts and washer at the stabilizer bar. Tighten the bolt to 136 N·m (100 ft.lbs.).

(4) Install the tire and wheel assembly. (Refer to 22 - TIRES/WHEELS/WHEELS - STANDARD PROCEDURE).

(5) Lower the vehicle.

STABILIZER LINK

REMOVAL

(1) Raise and support the vehicle.

(2) Remove the tire and wheel assembly.

(3) Remove the lower stabilizer link bolt at the lower control arm.

(4) Remove the upper stabilizer link bolt at the stabilizer bar.

(5) Remove the stabilizer link. (Fig. 17)

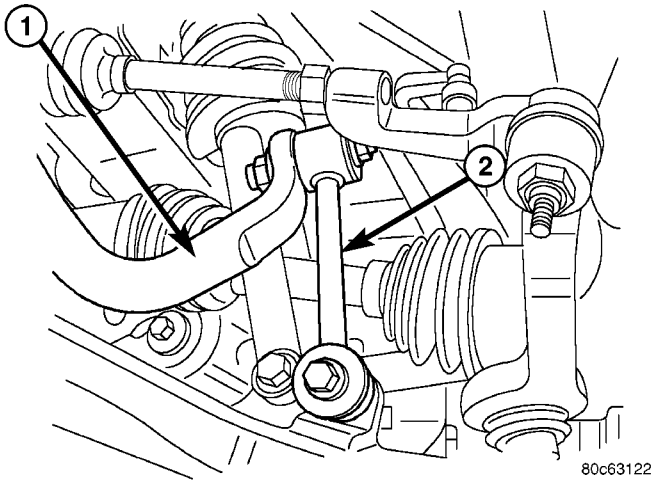

Fig. 17 STABILIZER BAR LINK

1 - STABILIZER BAR
2 - STABILIZER BAR LINK

INSTALLATION

(1) Install the stabilizer link (Fig. 17).

(2) Install the upper stabilizer link bolt and washer at the stabilizer bar. Tighten the bolt to 136 N·m (100 ft.lbs.).

(3) Install the lower stabilizer link bolt and washer at the lower control arm. Tighten the nut to 115 N·m (85 ft.lbs.).

(4) Install the tire and wheel assembly. (Refer to 22 - TIRES/WHEELS/WHEELS - STANDARD PROCEDURE).

UPPER CONTROL ARM

REMOVAL

REMOVAL - RIGHT SIDE

(1) Raise and support the vehicle.

(2) Remove the right side tire and wheel assembly.

(3) Remove the upper ball joint nut.

(4) Separate the upper ball joint from the steering knuckle using tool C-4150A.

(5) Lower the vehicle.

(6) Remove the air box (Refer to 9 - ENGINE/AIR INTAKE SYSTEM/AIR CLEANER ELEMENT - REMOVAL).

UPPER CONTROL ARM (Continued)

(7) Remove the cruise control servo mounting nuts.
(8) Remove the upper control arm rear bolt.
(9) Remove the upper control arm front bolt.
(10) Remove the upper control arm from the vehicle.

REMOVAL - LEFT SIDE

(1) Raise and support the vehicle.
(2) Remove the left side tire and wheel assembly.
(3) Remove the upper ball joint nut.
(4) Separate the upper ball joint from the steering knuckle using tool C-4150A.
(5) Lower the vehicle.
(6) Remove the battery (Refer to 8 - ELECTRICAL/BATTERY SYSTEM/BATTERY - REMOVAL).
(7) Unclip the power center and move it to the side out of the way.
(8) Remove the battery tray (Refer to 8 - ELECTRICAL/BATTERY SYSTEM/TRAY - REMOVAL).
(9) Disconnect the battery temperature sensor from the battery tray.
(10) Remove the upper control arm rear bolt by using a ratchet and extension under the steering shaft and positioned by the power steering reservoir. (Fig. 18)

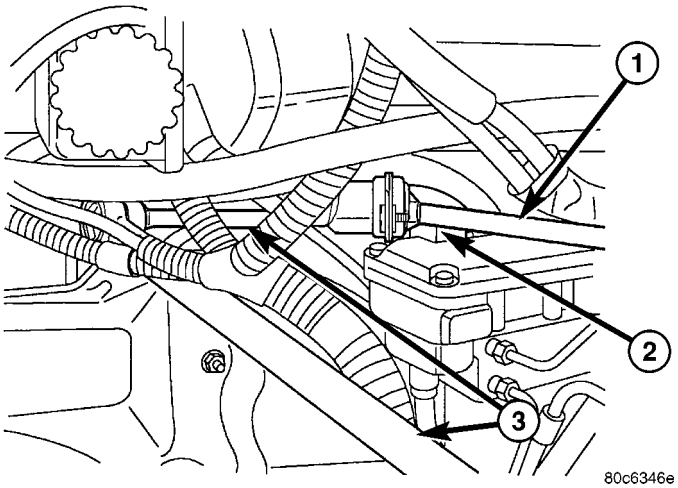

Fig. 18 REAR BOLT

1 - STEERING SHAFT
2 - REAR BOLT
3 - RATCHET WITH AN EXTENSION

(11) Remove the upper control arm front bolt.
(12) Remove the upper control arm from the vehicle.

INSTALLATION

INSTALLATION - RIGHT SIDE

(1) Install the upper control arm to the vehicle.
(2) Install the upper control arm front bolt. Tighten the bolt to 122 N·m (90 ft.lbs.).
(3) Install the upper control arm rear bolt. Tighten the bolt to 122 N·m (90 ft.lbs.).
(4) Install the cruise control servo mounting nuts.
(5) Install the air box (Refer to 9 - ENGINE/AIR INTAKE SYSTEM/AIR CLEANER ELEMENT - INSTALLATION).
(6) Install the upper ball joint nut. Tighten the nut to 81 N·m (60 ft.lbs.).
(7) Install the right side tire and wheel assembly. (Refer to 22 - TIRES/WHEELS/WHEELS - STANDARD PROCEDURE).
(8) Lower the vehicle.
(9) Set the toe and center the steering wheel (Refer to 2 - SUSPENSION/WHEEL ALIGNMENT - STANDARD PROCEDURE).

INSTALLATION - LEFT SIDE

(1) Install the upper control arm to the vehicle.
(2) Install the upper control arm front bolt (Fig. 19). Tighten the bolt to 122 N·m (90 ft.lbs.).
(3) Install the upper control arm rear bolt (Fig. 19). Tighten the bolt to 122 N·m (90 ft.lbs.).
(4) Reconnect the battery temperature sensor to the battery tray.
(5) Install the battery tray (Refer to 8 - ELECTRICAL/BATTERY SYSTEM/TRAY - INSTALLATION).
(6) Install the battery (Refer to 8 - ELECTRICAL/BATTERY SYSTEM/BATTERY - INSTALLATION).
(7) Reclip and mount the power center.
(8) Install the upper ball joint nut (Fig. 19). Tighten the nut to 81 N·m (60 ft.lbs.).

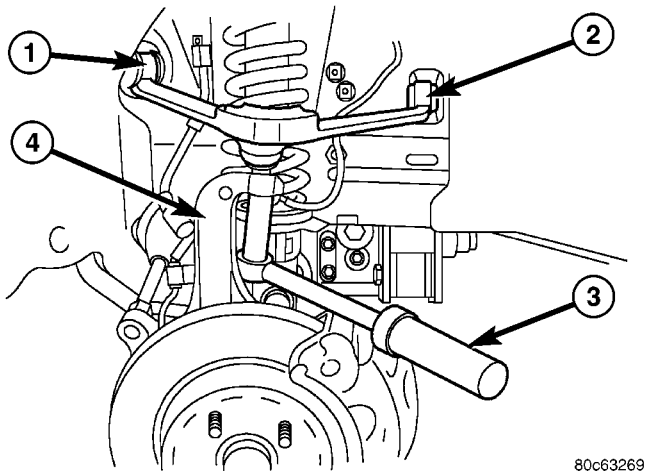

Fig. 19 UPPER CONTROL ARM

1 - FRONT PIVOT BOLT
2 - REAR PIVOT BOLT
3 - RATCHET TOOL
4 - STEERING KNUCKLE

(9) Install the left side tire and wheel assembly. (Refer to 22 - TIRES/WHEELS/WHEELS - STANDARD PROCEDURE).
(10) Lower the vehicle.
(11) Set the toe and center the steering wheel (Refer to 2 - SUSPENSION/WHEEL ALIGNMENT - STANDARD PROCEDURE).

REAR

TABLE OF CONTENTS

page

REAR
DESCRIPTION 20
WARNING 21
DIAGNOSIS AND TESTING - REAR SUSPENSION 21
SPECIFICATIONS
TORQUE CHART 21
SPECIAL TOOLS
REAR SUSPENSION 22
SHOCK
REMOVAL 22
INSTALLATION 22
SPRING
REMOVAL 23
INSTALLATION 23
JOUNCE BUMPER
REMOVAL 23
INSTALLATION 23
STABILIZER BAR
REMOVAL 24
INSTALLATION 24
UPPER BALL JOINT
REMOVAL 24
INSTALLATION 25

page

UPPER CONTROL ARM
DESCRIPTION - UPPER SUSPENSION ARM, BUSHINGS, AND BALL JOINT 25
OPERATION - UPPER SUSPENSION ARM, BUSHINGS, AND BALL JOINT 25
REMOVAL 25
INSTALLATION 25
LOWER CONTROL ARM
DESCRIPTION 26
OPERATION 26
REMOVAL 26
INSTALLATION 26
BUSHINGS
REMOVAL
REMOVAL - LOWER SUSPENSION ARM BUSHING 26
REMOVAL - UPPER SUSPENSION ARM BUSHING 27
INSTALLATION
INSTALLATION - LOWER SUSPENSION ARM BUSHING 27
INSTALLATION - UPPER SUSPENSION ARM BUSHING 28

REAR

DESCRIPTION

The rear suspension (Fig. 1) is comprised of :

- Drive axle
- Shock absorbers
- Coil springs
- Lower suspension arms
- Upper suspension arm
- Stabilizer bar

CAUTION: Suspension components with rubber/urethane bushings should be tightened with the vehicle at normal ride height. It is important to have the springs supporting the weight of the vehicle when the fasteners are torqued. This will maintain vehicle ride comfort and prevent premature bushing wear.

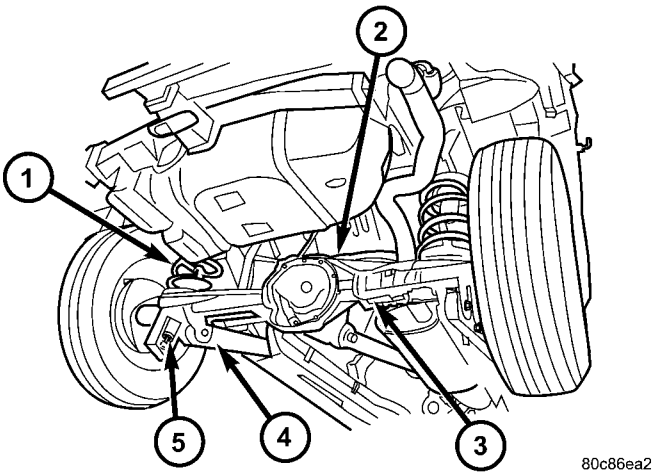

Fig. 1 REAR SUSPENSION

1 - COIL SPRING
2 - UPPER SUSPENSION ARM
3 - STABILIZER BAR
4 - LOWER SUSPENSION ARM
5 - SHOCK

REAR (Continued)

WARNING

WARNING: Suspension components with rubber bushings must be tightened with the vehicle at normal ride height. It is important to have the springs supporting the weight of the vehicle when the fasteners are torqued. If springs are not at their normal ride position, vehicle ride comfort will be affected and cause premature bushing wear.

DIAGNOSIS AND TESTING - REAR SUSPENSION

CONDITION	POSSIBLE CAUSES	CORRECTION
VEHICLE INSTABILITY	1. Loose or worn wheel bearings. 2. Loose, worn or bent suspension components. 3. Tire pressure.	1. Replace wheel bearings. 2. Inspect, tighten or replace components as necessary. 3. Adjust tire pressure.
VEHICLE PULLS TO ONE SIDE	1. Weak or broken spring. 2. Alignment. 3.Tires. 4. Brakes.	1. Replace spring. 2. Align vehicle to specifications. 3. Replace tires. 4. Repair as necassary.
KNOCKING, RATTLING OR SQUEAKING	1. Worn shock bushings. 2. Loose shock mounting. 3. Shock valve. 4. Loose upper ball joint. 5. Loose, worn or bent suspension components.	1. Replace shock. 2. Tighten to specifications. 3. Replace shock. 4. Replace ball joint. 5. Inspect, tighten or replace components as necessary.
IMPROPER TRACKING	1. Loose, worn or bent suspension components. 2. Bent axle.	1. Inspect, tighten or replace components as necessary. 2.Replace axle.

SPECIFICATIONS

TORQUE CHART

TORQUE SPECIFICATIONS

DESCRIPTION	N·m	Ft. Lbs.	In. Lbs.
Shock Absorber Upper Nut	108	80	—
Shock Absorber Lower Nut	115	85	—
Suspension Arm Upper Ball Joint Nut	95	70	—
Suspension Arm Upper Frame Bolts	100	74	—
Control Arm Frame Bolts	100	74	—
Rear Upper Ball Joint Bracket Bolts	136	100	—

REAR (Continued)

DESCRIPTION	N·m	Ft. Lbs.	In. Lbs.
Suspension Arms Lower Body/Axle Bracket Nut	163	120	—
Control Arms to Control Arm Bracket	101	75	—
Suspension Arms Lower Frame Bracket Nut	163	120	—
Control Arm Bracket to Rear Differential	135	100	—
Rear Differential Damper to Rear Differential	61	45	—
Stabilizer Bar Bolts	99	73	—

SPECIAL TOOLS

REAR SUSPENSION

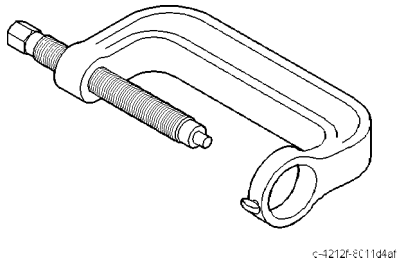

BALL JOINT PRESS - C-4212F

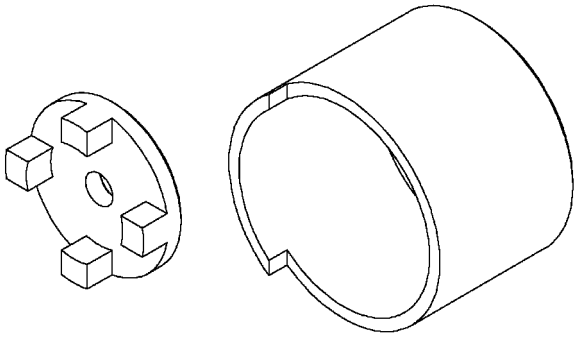

REMOVAL / INSTALLATION REAR UPPER CONTROL ARM BUSHINGS - 8860

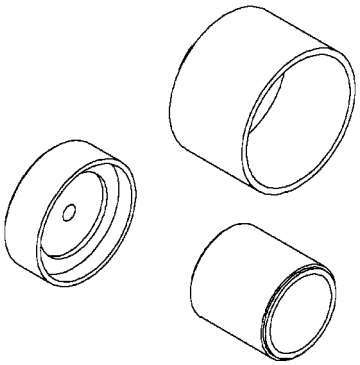

REMOVER / INSTALLER REAR UPPER BALL JOINT - 8861

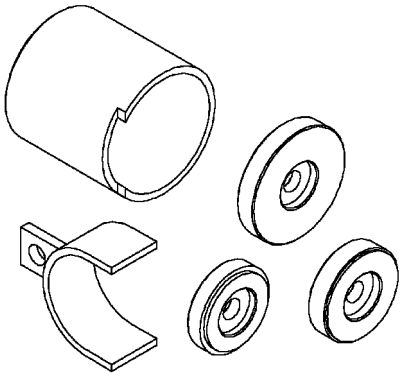

REAR LOWER CONTROL ARM BUSHING REMOVER/INSTALLER - 8862

SHOCK

REMOVAL

(1) Raise and support the vehicle. Position a hydraulic jack under the axle to support the axle.

CAUTION: Do not allow the axle to hang from the upper suspension arm ball joint.

(2) Remove the upper nut and bolt from the frame bracket (Fig. 2).

(3) Remove the lower nut and bolt from the axle bracket. Remove the shock absorber.

INSTALLATION

(1) Install the shock absorber in the frame bracket and install the bolt and nut (Fig. 2).

(2) Install the shock absorber in the axle bracket and install the bolt and nut (Fig. 2).

(3) Remove the supports and lower the vehicle.

SHOCK (Continued)

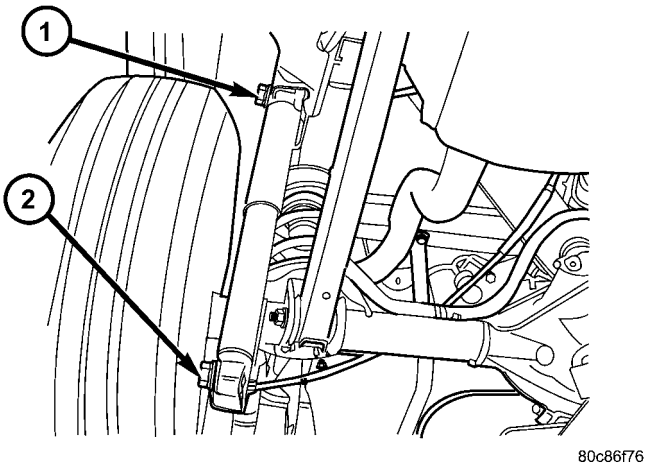

Fig. 2 SHOCK ABSORBER

1 - UPPER MOUNTING BOLT
2 - LOWER MOUNTING BOLT

(4) Tighten the upper mounting nuts to 108 N·m (80 ft. lbs.). Tighten the lower mounting nuts to 115 N·m (85 ft. lbs.).

SPRING

REMOVAL

(1) Raise and support the vehicle. Position a hydraulic jack under the axle to support the axle.

(2) Remove the shock absorber lower bolt from the axle bracket.

(3) Lower the hydraulic jack and tilt the axle and remove the coil spring (Fig. 3).

(4) Remove and inspect the upper and lower spring isolators (Fig. 3).

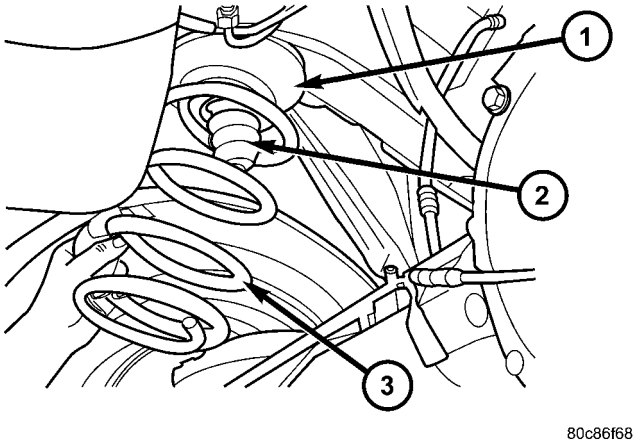

Fig. 3 COIL SPRING

1 - UPPER INSULATOR
2 - JOUNCE BUMPER
3 - COIL SPRING

INSTALLATION

(1) Install the upper isolator (Fig. 3).

(2) Install the lower isolator (Fig. 3).

(3) Pull down on the axle and position the coil spring in the lower isolator.

CAUTION: Ensure the spring is positioned on the lower isolator.

(4) Raise the axle with the hydraulic jack.

(5) Install the shock absorber to the axle bracket and tighten to 115 N·m (85 ft. lbs.).

(6) Remove the supports and lower the vehicle.

(7) Tighten the stabilizer bar links to 99 N·m (73 ft. lbs.).

JOUNCE BUMPER

REMOVAL

(1) Remove the shock (Refer to 2 - SUSPENSION/REAR/SHOCK - REMOVAL).

(2) Remove the coil spring (Refer to 2 - SUSPENSION/REAR/SPRING - REMOVAL).

(3) Pull the jounce bumper downwards to remove. (Fig. 4)

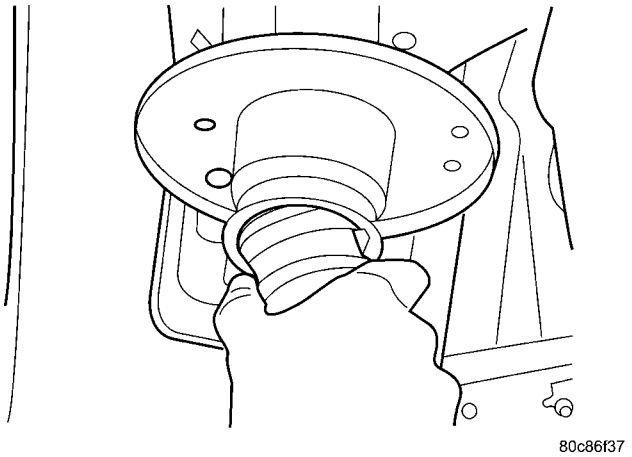

Fig. 4 JOUNCE BUMPER

INSTALLATION

(1) Install the jounce bumper into the mount by twisting the bumper into place (Fig. 4).

(2) Install the coil spring (Refer to 2 - SUSPENSION/REAR/SPRING - INSTALLATION).

(3) Install the shock (Refer to 2 - SUSPENSION/REAR/SHOCK - INSTALLATION).

STABILIZER BAR

REMOVAL

(1) Raise and support the vehicle.

(2) Remove the stabilizer bar bolts from the lower suspension arm. (Fig. 5).

(3) Remove the stabilizer bar.

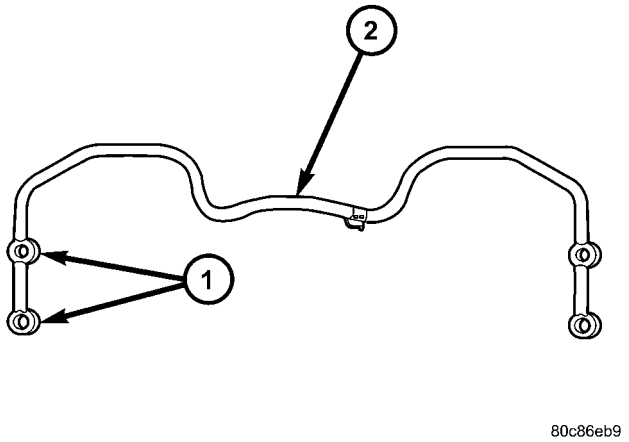

Fig. 5 REAR STABILIZER BAR

1 - MOUNTING HOLES
2 - STABILIZER BAR

INSTALLATION

(1) Position the stabilizer bar over the axle and install the bolts to the lower suspension arm (Fig. 6). Ensure the bar is centered with equal spacing on both sides. Tighten the bolts to 99 N·m (73 ft. lbs.).

(2) Remove support and lower the vehicle.

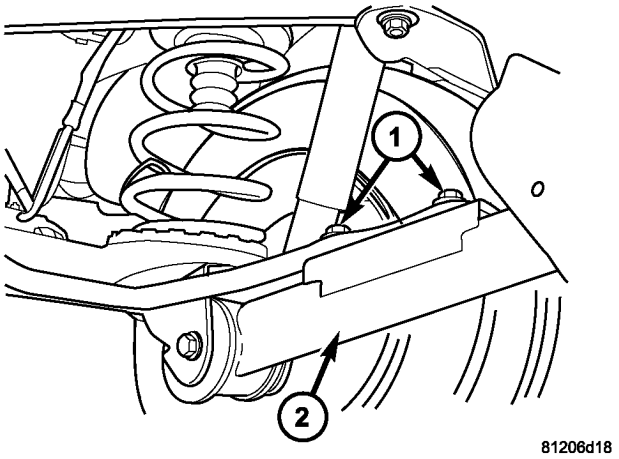

Fig. 6 STABILIZER BAR MOUNTS

1 - STABILIZER BAR MOUNTING BOLTS
2 - LOWER SUSPENSION ARM

UPPER BALL JOINT

REMOVAL

(1) Raise and support the vehicle.

(2) Support the rear axle with a hydraulic jack.

(3) Remove the ball joint pinch bolt from the top of the axle. (Fig. 7)

(4) Separate the ball joint arm assembly from the differential housing by prying upwards.

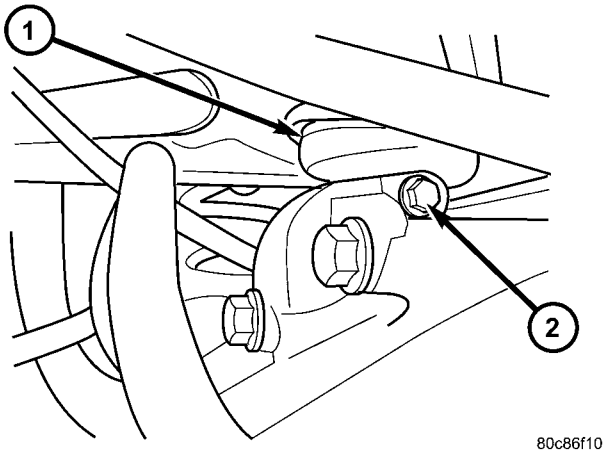

Fig. 7 BALL JOINT PINCH BOLT

1 - UPPER BALL JOINT
2 - PINCH BOLT

(5) Remove the upper suspension arm from the vehicle (Refer to 2 - SUSPENSION/REAR/UPPER CONTROL ARM - REMOVAL).

(6) Secure the suspension arm in a vise.

(7) Install special tools C-4212F (press), 8861-3 (driver) and 8861-2 (receiver) (Fig. 8)

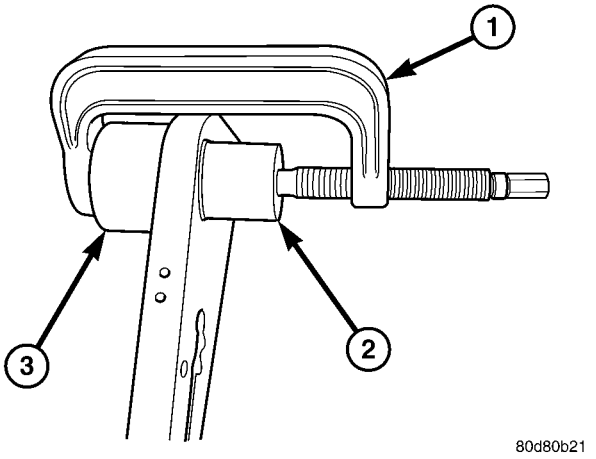

Fig. 8 UPPER BALL JOINT - REMOVAL

1 - C-4212F PRESS
2 - 8861-3 DRIVER
3 - 8861-2 RECEIVER

(8) Press out the old ball joint.

UPPER BALL JOINT (Continued)

INSTALLATION

(1) Install special tools C-4212F (press), 8861-1 (receiver) and 8861-2 (driver) with the ball joint in place (Fig. 9).

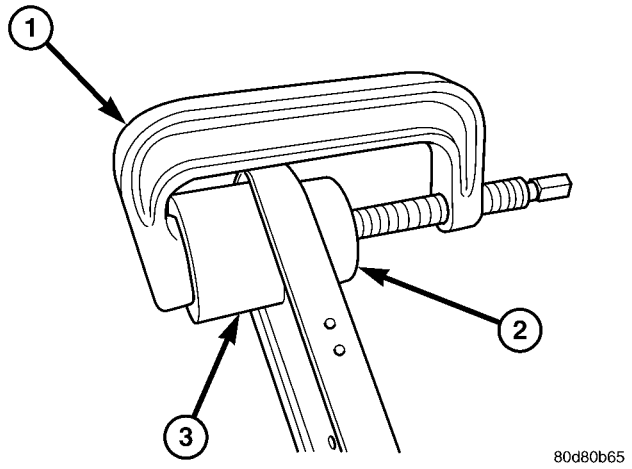

Fig. 9 UPPER BALL JOINT - INSTALLATION

1 - C-4212F PRESS
2 - 8861-1 RECEIVER
3 - 8861-2 DRIVER

(2) Press the ball joint in the upper suspension arm.

(3) Remove the upper suspension arm from the vise.

(4) Reinstall the upper suspension arm (Refer to 2 - SUSPENSION/REAR/UPPER CONTROL ARM - INSTALLATION).

(5) Raise the rear axle with a hydraulic jack to align the ball joint with the differential housing bracket.

(6) Insert the ball joint into the differential housing bracket.

(7) Install the ball joint pinch bolt and tighten to 95 N·m (70 ft. lbs.). (Fig. 7).

(8) Remove the supports and lower the vehicle.

UPPER CONTROL ARM

DESCRIPTION - UPPER SUSPENSION ARM, BUSHINGS, AND BALL JOINT

The suspension arm uses vertical spool bushings to isolate road noise. The suspension arm is bolted through bushings to cage nuts in the body and a ball joint to the top of the differential housing.

OPERATION - UPPER SUSPENSION ARM, BUSHINGS, AND BALL JOINT

The upper suspension arm provides fore/aft and lateral location of the rear axle. The suspension arm travel is limited through the use of jounce bumpers in compression and shock absorbers in rebound.

REMOVAL

(1) Raise and support the vehicle.

(2) Support the rear axle with a hydraulic jack.

(3) Remove the ball joint pinch bolt from the top of the differential housing bracket (Fig. 7).

(4) Remove partial nuts from the heat shield in order to lower the shield down enough to get the proper clearence to remove the right side bolt from the body.

(5) Remove the upper suspension arm mounting bolts from the body and remove the arm (Fig. 10).

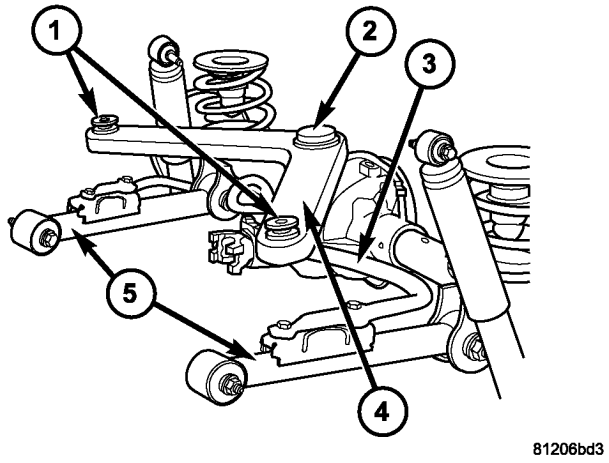

Fig. 10 UPPER CONTROL ARM

1 - BODY MOUNTS
2 - UPPER BALL JOINT
3 - STABILIZER BAR
4 - UPPER CONTROL ARM
5 - LOWER CONTROL ARM

(6) Remove the support bracket mounting bolts if needed. (Fig. 11)

INSTALLATION

(1) Position the upper suspension arm in the frame rail brackets (Fig. 10).

(2) Install the mounting bolts and tighten to 100 N·m (74 ft. lbs.).

(3) Retighten the heat shield back into place.

(4) Pull the arm down on the differential housing bracket and install the pinch bolt and nut. Tighten the nut to 95 N·m (70 ft. lbs.) (Fig. 7).

UPPER CONTROL ARM (Continued)

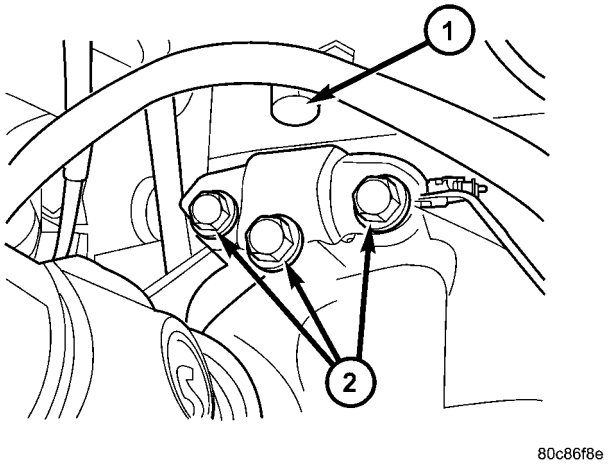

Fig. 11 BALL JOINT BRACKET

1 - UPPER BALL JOINT
2 - SUPPORT BRACKET BOLTS

(5) Remove the supports and lower the vehicle.

LOWER CONTROL ARM

DESCRIPTION

The lower suspension arms are stamped steel and welded and use voided round bushings at the axle end and solid rubber at the body end of the arm.

OPERATION

The bushings provide isolation from the axle. The arms mount to the unibody frame rail bracket and the axle brackets. The arm and bushings provide location and react to loads.

REMOVAL

(1) Raise the vehicle and support the rear axle.

(2) Remove the stabilizer bar retaining bolts from the suspension arm.

(3) Remove the lower suspension arm nut and bolt from the axle bracket (Fig. 12).

NOTE: When removing the right side suspension arm from the frame rail it will be necessary to pry the exhaust over slightly to allow enough clearance to remove the bolt.

(4) Remove the nut and bolt (Fig. 12) from the frame rail and remove the lower suspension arm.

INSTALLATION

(1) Position the lower suspension arm in the axle bracket and frame rail bracket.

NOTE: The end of the arm with the voided round bushing attaches to the axle bracket.

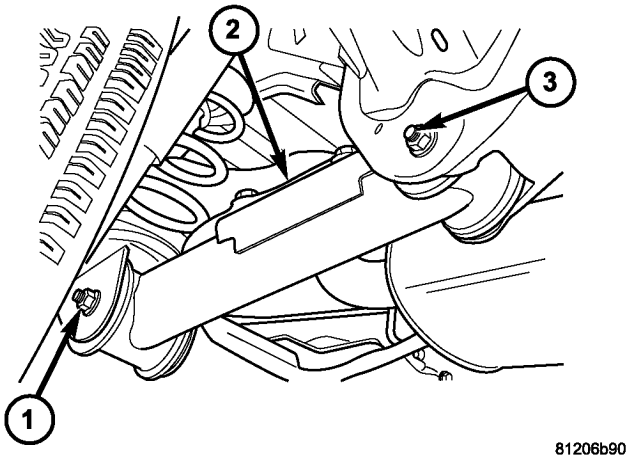

Fig. 12 LOWER SUSPENSION ARM

1 - AXLE BRACKET BOLT
2 - LOWER CONTROL ARM
3 - BODY BRACKET BOLT

(2) Install the axle bracket bolt and nut finger tight (Fig. 12).

NOTE: When installing the right side suspension arm to the frame rail it will be necessary to pry the exhaust over slightly to allow enough clearance to install the bolt.

(3) Install the frame rail bracket bolt and nut finger tight.

(4) Install the stabilizer bar retaining bolts to the suspension arm.

(5) Remove the supports and lower the vehicle.

(6) With the vehicle on the ground tighten the nut at the frame to 163 N·m (120 ft. lbs.). Tighten the nut at the axle bracket to 163 N·m (120 ft. lbs.).

BUSHINGS

REMOVAL

REMOVAL - LOWER SUSPENSION ARM BUSHING

(1) Remove the lower suspension arm (Refer to 2 - SUSPENSION/REAR/LOWER CONTROL ARM - REMOVAL).

(2) Secure the suspension arm in a vise.

NOTE: Extreme pressure lubrication must be used on the threaded portions of the tool. This will increase the longevity of the tool and insure proper operation during the removal and installation process.

BUSHINGS (Continued)

(3) Install special tools 8862-4 (receiver), 8862-5 (spacer) and 8862-1 or 8862- 2 (driver) with the threaded rod 8839 and the bearing as shown (Fig. 13)

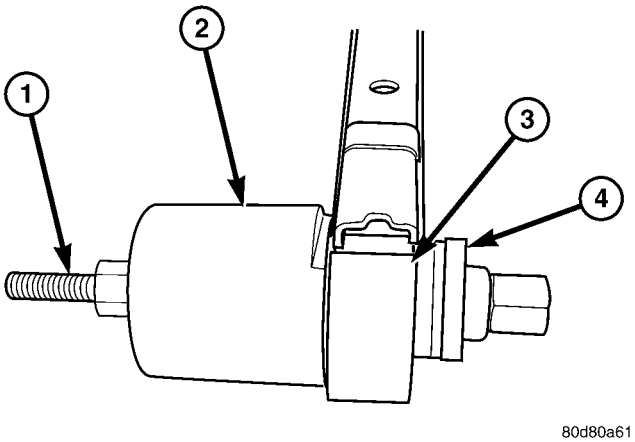

Fig. 13 LOWER SUSPENSION ARM BUSHING REMOVAL

1 - 8839 THREADED ROD
2 - 8862-4 RECEIVER
3 - 8862-5 SPACER
4 - 8862-1 OR 8862-2 DRIVERS

(4) Press out the bushing.

REMOVAL - UPPER SUSPENSION ARM BUSHING

(1) Remove the upper suspension arm (Refer to 2 - SUSPENSION/REAR/UPPER CONTROL ARM - REMOVAL).

(2) Secure the suspension arm in a vise.

NOTE: Extreme pressure lubrication must be used on the threaded portions of the tool. This will increase the longevity of the tool and insure proper operation during the removal and installation process.

(3) Install special tools 8853-3 (driver), 8860-1 (receiver) and with the threaded rod 8838 and the bearing as shown (Fig. 14)

(4) Press out the bushing.

INSTALLATION

INSTALLATION - LOWER SUSPENSION ARM BUSHING

NOTE: Extreme pressure lubrication must be used on the threaded portions of the tool. This will increase the longevity of the tool and insure proper operation during the removal and installation process.

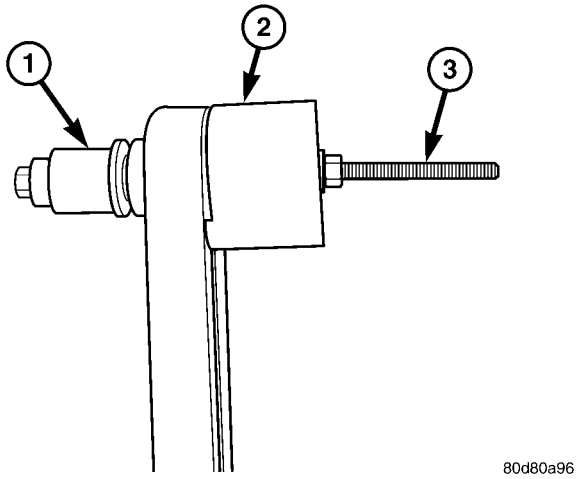

Fig. 14 UPPER SUSPENSION ARM BUSHING - REMOVAL

1 - 8853-3 DRIVER
2 - 8860-1 RECEIVER
3 - 8838 THREADED ROD

(1) Install the new lower suspension arm bushings into the lower suspension arm using tools 8862-3 (driver), 8862-4 (receiver), 8862-5 (spacer) and the bearing with the threaded rod 8839 (Fig. 15) making sure to properly orient the bushing in the suspension arm.

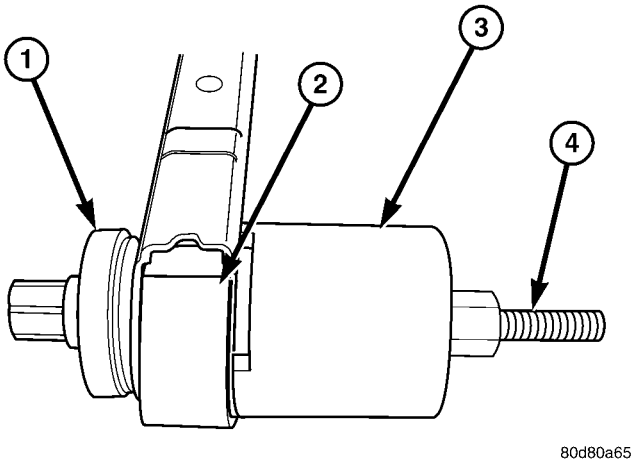

Fig. 15 LOWER SUSPENSION ARM BUSHING INSTALLATION

1 - 8862-3 DRIVER
2 - 8862-5 SPACER
3 - 8862-4 RECEIVER
4 - 8839 THREADED ROD

(2) Remove the suspension arm from the vise.

(3) Install the lower suspension arm (Refer to 2 - SUSPENSION/REAR/LOWER CONTROL ARM - INSTALLATION).

BUSHINGS (Continued)

INSTALLATION - UPPER SUSPENSION ARM BUSHING

NOTE: Extreme pressure lubrication must be used on the threaded portions of the tool. This will increase the longevity of the tool and insure proper operation during the removal and installation process.

(1) Install the new upper suspension arm bushings into the upper suspension arm using tools 8835-3 (receiver), 8860-2 (driver) and the bearing with the threaded rod 8838 (Fig. 16) making sure to properly orient the bushing in the suspension arm.

(2) Remove the suspension arm from the vise.

(3) Install the upper suspension arm (Refer to 2 - SUSPENSION/REAR/UPPER CONTROL ARM - INSTALLATION).

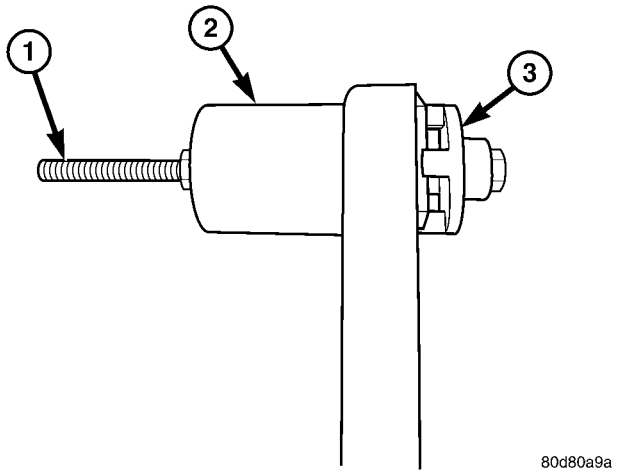

Fig. 16 UPPER SUSPENSION ARM BUSHING - INSTALLATION

1 - 8838 THREADED ROD
2 - 8835-3 RECEIVER
3 - 8860-2 DRIVER

DIFFERENTIAL & DRIVELINE

TABLE OF CONTENTS

	page
PROPELLER SHAFT	1
HALF SHAFT	10
FRONT AXLE - 186FIA	20
REAR AXLE - 8 1/4	52

PROPELLER SHAFT

TABLE OF CONTENTS

	page
PROPELLER SHAFT	
DIAGNOSIS AND TESTING	
PROPELLER SHAFT	1
STANDARD PROCEDURE	
PROPELLER SHAFT ANGLE	3
SPECIFICATIONS	5
SPECIAL TOOLS	5
SHAFT-PROPELLER FRONT	
REMOVAL	
2.8L DIESEL	5
GAS ENGINES	6
INSTALLATION	
2.8L DIESEL	6
GAS ENGINES	6
SHAFT-PROPELLER REAR	
REMOVAL	6
INSTALLATION	7
UNIVERSAL JOINT-SINGLE CARDAN	
DISASSEMBLY - WITH SNAP RINGS	8
ASSEMBLY - WITH SNAP RINGS	9

PROPELLER SHAFT

DIAGNOSIS AND TESTING

PROPELLER SHAFT

PROPELLER SHAFT VIBRATION

Out-of-round tire or wheels that are out of balance, will cause a low frequency vibration.

Brake rotors that are unbalanced will cause a harsh, low frequency vibration.

Driveline vibration can be caused by loose or damaged engine mounts.

Propeller shaft vibration increases with vehicle speed. A vibration that occurs at a specific speed is not usually caused by a out of balance propeller shaft. Worn universal joints or an incorrect propeller shaft angle, can cause such a vibration.

PROPELLER SHAFT (Continued)

DRIVELINE VIBRATION

Drive Condition	Possible Cause	Correction
Propeller Shaft Noise	1. Undercoating or other foreign material on shaft.	1. Clean exterior of shaft and wash with solvent.
	2. Loose U-joint clamp screws.	2. Install new clamps and screws and tighten to proper torque.
	3. Loose or bent U-joint yoke or excessive runout.	3. Install new yoke.
	4. Incorrect driveline angularity.	4. Measure and correct driveline angles.
	5. Worn joint.	5. Install new joint.
	6. Propeller shaft damaged or out of balance.	6. Installl new propeller shaft.
	7. Broken rear spring.	7. Install new rear spring.
	8. Excessive runout or unbalanced condition.	8. Re-index propeller shaft, test, and evaluate.
	9. Excessive drive pinion gear shaft runout.	9. Re-index propeller shaft and evaluate.
	10. Excessive axle yoke deflection.	10. Inspect and replace yoke if necessary.
	11. Excessive transfer case runout.	11. Inspect and repair as necessary.
U-Joint Noise	1. Loose U-joint clamp screws.	1. Install new clamps and screws and tighten to proper torque.
	2. Lack of lubrication.	2. Replace joints as necessary.

BALANCE

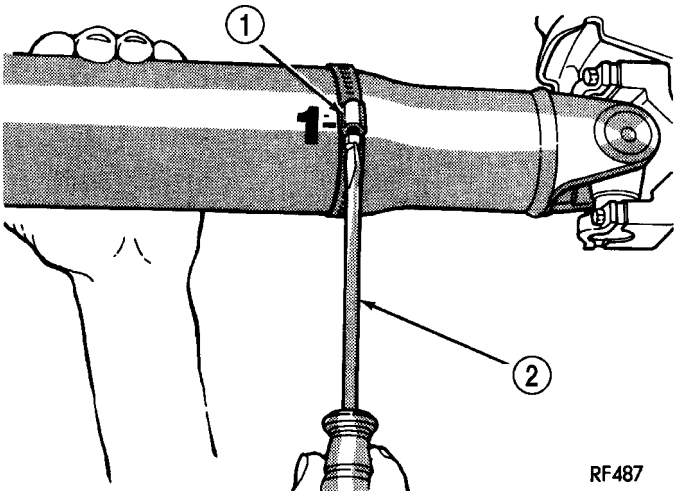

Fig. 1 CLAMP AT POSITION 1

1 - CLAMP
2 - SCREWDRIVER

NOTE: Indexing the propeller shaft 180° relative to the yoke may eliminate some vibrations.

(1) Raise the vehicle.

(2) Clean all the foreign material from the propeller shaft and universal joints.

(3) Inspect propeller shaft for missing balance weights, broken welds, and bent areas.

NOTE: If the propeller shaft is bent, it must be replaced.

(4) Inspect universal joints for wear, properly installation and correct alignment with the shaft.

(5) Remove wheels and tires and install wheel lug nuts to retain brake drums/rotors.

(6) Mark and number the shaft six inches from the pinion yoke end at four positions 90° apart.

(7) Run and accelerate the vehicle until vibration occurs. Note the intensity and speed the vibration occurred. Stop the engine.

(8) Position one screw clamp (1) (Fig. 1)on the propeller shaft with wsa screw driver (2).

(9) Start the engine and check for vibration. If there is little or no change in vibration, move the clamp to the next positions. Repeat the vibration test. If there is no difference in vibration at the other

PROPELLER SHAFT (Continued)

positions, the source of the vibration may not be propeller shaft.

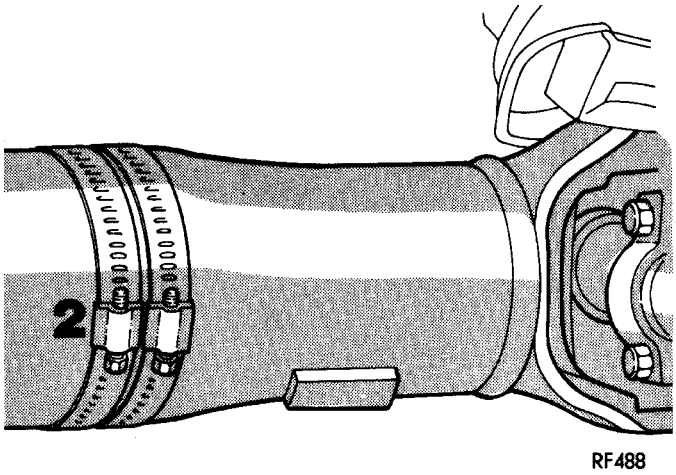

Fig. 2 TWO CLAMPS AT SAME POSITION

(10) If vibration decreased, install a second clamp (Fig. 2) and repeat the test.

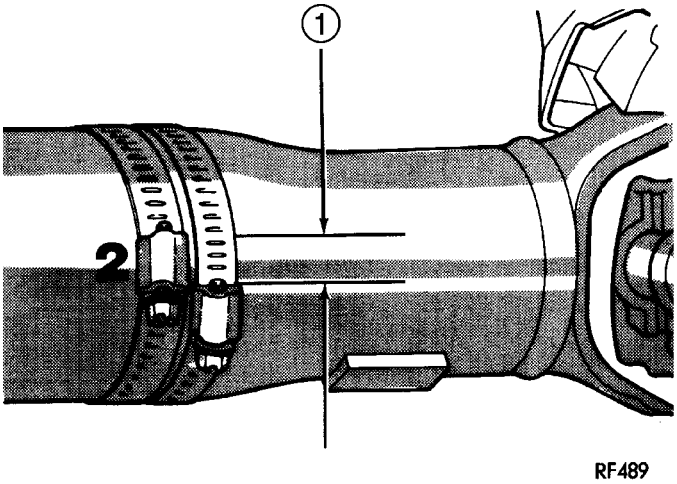

Fig. 3 CLAMPS SEPARATED

1 - ½ INCH

(11) If the additional clamp causes an additional vibration, separate the clamps (1) (Fig. 3) (1/4 inch above and below the mark). Repeat the vibration test.

(12) Increase distance between the clamps and repeat the test until the amount of vibration is at the lowest level. Bend the slack end of the clamps so the screws will not loosen.

(13) If vibration remains unacceptable, repeat the procedure to the front end of the propeller shaft.

(14) Install wheel and tires, and lower vehicle.

RUNOUT

RUNOUT SPECIFICATIONS

Front of Shaft	0.020 in. (0.50 mm)
Center of Shaft	0.025 in. (0.63 mm)
Rear of Shaft	0.020 in. (0.50 mm)
note: Measure front/rear runout approximately 3 inches (76 mm) from the weld seam at each end of the shaft tube for tube lengths over 30 inches. For tube lengths under 30 inches, the maximum allowed runout is 0.020 in. (0.50 mm) for the full length of the tube.	

(1) Clean propeller shaft surface where the dial indicator will contact the shaft.

(2) The dial indicator must be installed perpendicular to the shaft surface.

(3) Measure runout at the center and ends of the shaft away from weld areas to ensure an accurate measurements.

(4) Refer to Runout Specifications chart.

(5) If propeller shaft runout is out of specification, remove propeller shaft. Index the shaft 180° and measure shaft runout again.

(6) If propeller shaft runout is now within specifications, mark the shaft and yokes for proper orientation.

(7) If propeller shaft runout is not within specifications, check runout of the transmission/transfer case and axle. Correct as necessary and repeat propeller shaft runout measurement.

(8) Replace propeller shaft if the runout still exceeds the limits.

STANDARD PROCEDURE

PROPELLER SHAFT ANGLE

This procedure applies to the front and rear propeller shaft. To obtain front (output) angle on the C/V front propeller shaft, place Inclinometer 7663 on the machined ring of the pinion flange. To obtain propeller shaft angle measurement on the C/V front propeller shaft, place inclinometer on the propeller shaft tube.

(1) Raise and support the vehicle at the axles as level as possible. Allow the wheels and propeller shaft to turn.

(2) Remove universal joint snap rings if equipped, so inclinometer base sits flat.

(3) Rotate shaft until transmission/transfer case output yoke bearing cap is facing downward.

PROPELLER SHAFT (Continued)

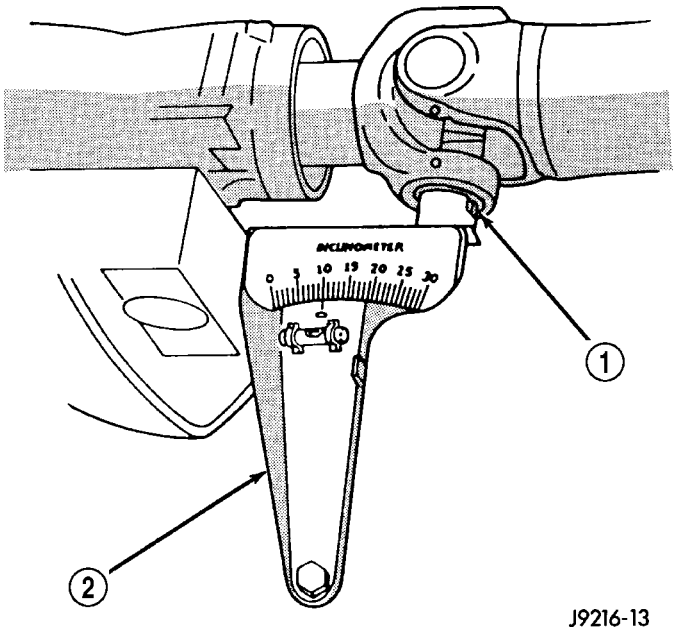

Fig. 4 OUTPUT YOKE ANGLE (A)

1 - SLIP YOKE BEARING CAP
2 - INCLINOMETER

NOTE: Always make measurements from front to rear and from the same side of the vehicle.

(4) Place inclinometer (1) (Fig. 4) on yoke bearing cap (2) or pinion flange ring parallel to the shaft. Center bubble in sight glass and record measurement. This measurement will give you the transmission or Output Yoke Angle (A).

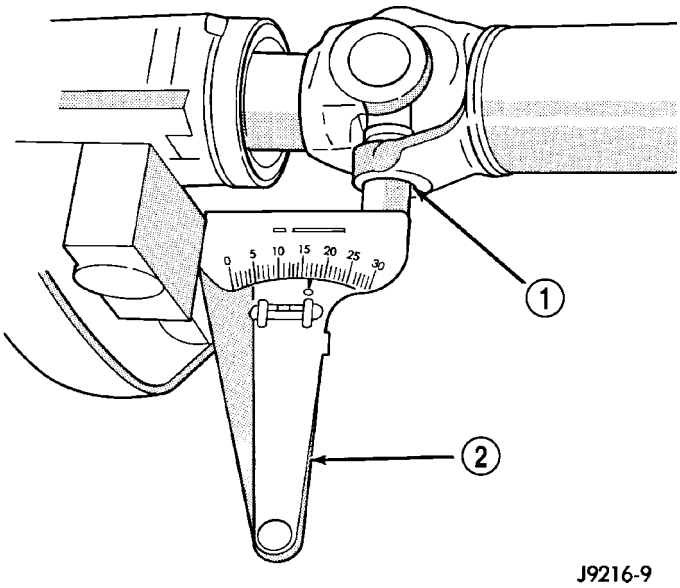

Fig. 5 PROPELLER SHAFT ANGLE (C)

1 - SHAFT YOKE BEARING CAP
2 - INCLINOMETER

(5) Rotate propeller shaft 90 degrees and place inclinometer (2) (Fig. 5) on yoke bearing cap (1) or propeller shaft tube on C/V propeller shaft, parallel to the shaft. Center bubble in sight glass and record measurement. This measurement can also be taken at the rear end of the shaft. This measurement will give you the propeller shaft angle (C)

(6) Subtract smaller figure from larger (C minus A) to obtain transmission output operating angle.

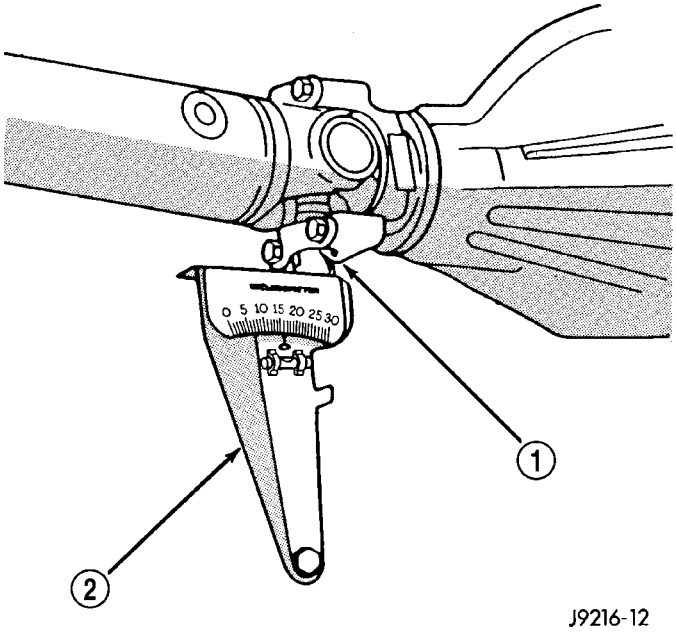

Fig. 6 INPUT YOKE ANGLE (B)

1 - PINION YOKE BEARING CAP
2 - INCLINOMETER

(7) Rotate propeller shaft 90 degrees and place inclinometer (2) (Fig. 6) on pinion yoke bearing cap (1) parallel to the shaft. Center bubble in sight glass and record measurement. This measurement will give you the pinion shaft or input yoke angle (B).

(8) Subtract smaller figure from larger (C minus B) to obtain axle Input Operating Angle.

RULES

Good cancellation of U-joint operating angles is within 1degree.

Operating angles less than 3 degrees.

Operating angles less than 10 degrees for double cardan U-joint.

At least 1/2 of one degree continuous operating (propeller shaft) angle.

PROPELLER SHAFT (Continued)

SPECIFICATIONS

TORQUE SPECIFICATIONS

DESCRIPTION	N·m	Ft. Lbs.	In. Lbs.
Front Shaft - Companion Flange Bolts	30	22	-
Rear Shaft - Companion Flange Bolts	115	85	-

SPECIAL TOOLS

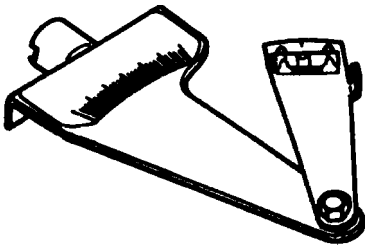

INCLINOMETER 7663

SHAFT-PROPELLER FRONT

REMOVAL

2.8L DIESEL

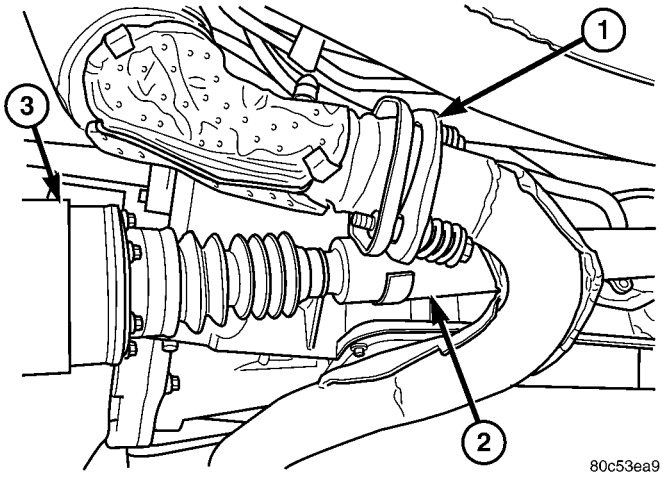

Fig. 7 LEFT EXHAUST FLANGE

1 - EXHAUST FLANGE
2 - FRONT PROPELLER SHAFT
3 - COMPANION FLANGE

(1) With vehicle in neutral, position vehicle on hoist.

(2) Remove left side exhaust flange (1) (Fig. 7) bolts.

(3) Mark companion flanges (3) and C/V joints at the front (2) and rear of the propeller shaft for installation reference.

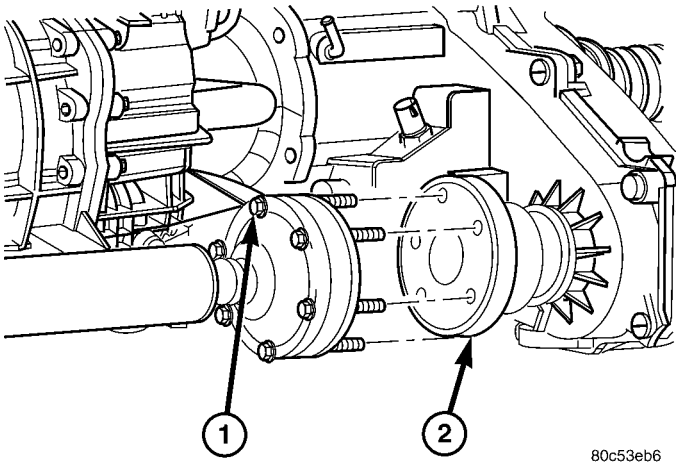

Fig. 8 TRANSFER CASE COMPANION FLANGE

1 - FLANGE BOLT
2 - COMPANION FLANGE

(4) Remove bolts (1) (Fig. 8) from the front and rear C/V joints.

(5) Push propeller shaft forward to clear transfer case companion flange (2).

(6) Remove shaft from the front axle companion flange.

(7) Pull down on the exhaust and tilt the front of the shaft down and pull shaft forward and remove from the vehicle.

SHAFT-PROPELLER FRONT (Continued)

GAS ENGINES

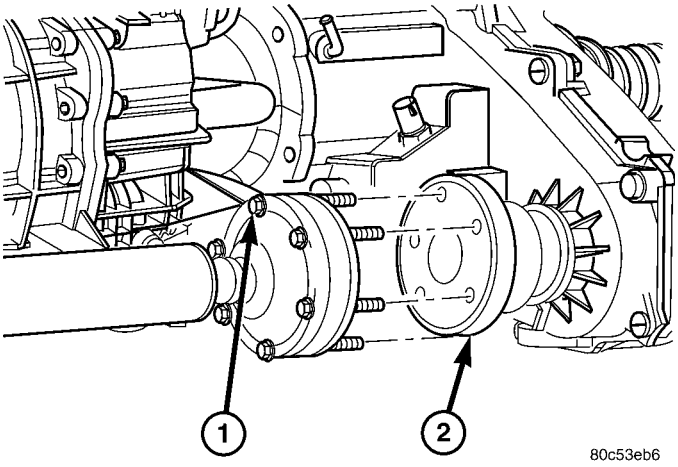

Fig. 9 TRANSFER CASE COMPANION FLANGE

1 - FLANGE BOLT
2 - COMPANION FLANGE

(1) With vehicle in neutral, position vehicle on hoist.

(2) Mark companion flanges and C/V joints at the front and rear of the propeller shaft for installation reference.

(3) Remove bolts (1) (Fig. 9) from the front and rear C/V joints (2).

(4) Push propeller shaft forward to clear transfer case companion flange.

(5) Remove shaft from the front axle companion flange.

(6) Tilt the front of the shaft down and pull shaft forward and remove from the vehicle.

INSTALLATION

2.8L DIESEL

(1) Install propeller shaft between companion flanges.

(2) Align marks on the companion flanges with the marks on the C/V joints.

(3) Install front C/V joint bolts and tighten to 30 N·m (22 ft. lbs.).

(4) Install rear C/V joint bolts and tighten to 30 N·m (22 ft. lbs.).

(5) Install exhaust flange and bolts.

GAS ENGINES

(1) Install propeller shaft between companion flanges.

(2) Align marks on the companion flanges with the marks on the C/V joints.

(3) Install front C/V joint bolts and tighten to 30 N·m (22 ft. lbs.).

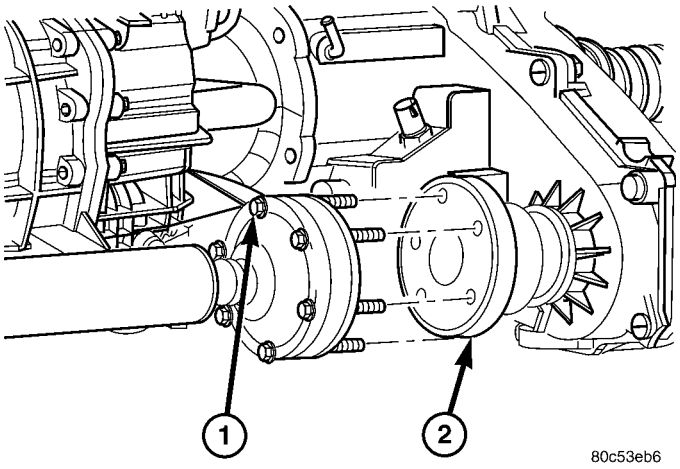

Fig. 10 TRANSFER CASE COMPANION FLANGE

1 - FLANGE BOLT
2 - COMPANION FLANGE

(4) Install rear C/V joint bolts (1) (Fig. 10) and tighten to 30 N·m (22 ft. lbs.).

SHAFT-PROPELLER REAR

REMOVAL

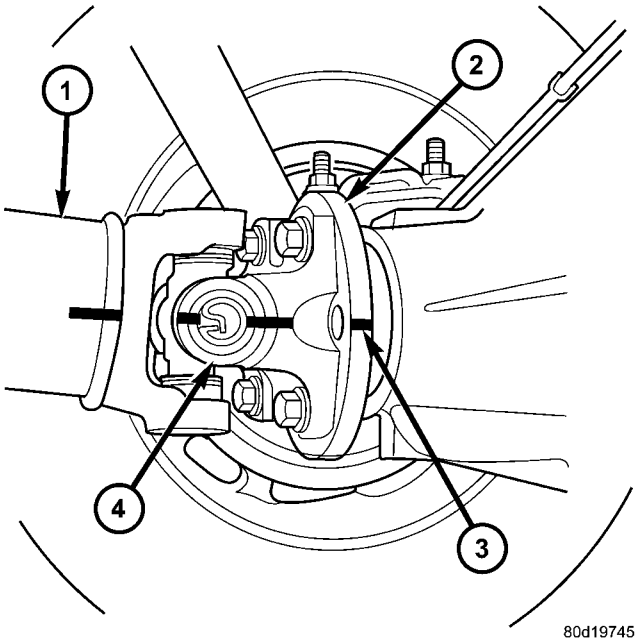

Fig. 11 COMPANION FLANGE

1 - PROPELLER SHAFT
2 - PINION COMPANION FLANGE
3 - REFERENCE MARK
4 - PROPELLER SHAFT COMPANION FLANGE

(1) With vehicle in neutral, position vehicle on hoist.

SHAFT-PROPELLER REAR (Continued)

(2) Mark a reference line (3) (Fig. 11) across companion flanges (2) (4) and propeller shaft (1) for installation.

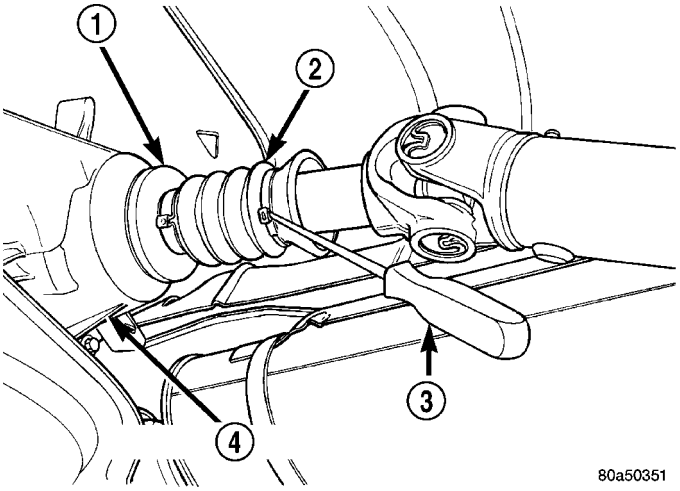

Fig. 12 DUST BOOT CLAMP

1 - SLINGER
2 - BOOT
3 - AWL
4 - TRANSFER CASE

(3) Pry open clamp holding the dust boot (2) (Fig. 12) to propeller shaft yoke, if equipped.

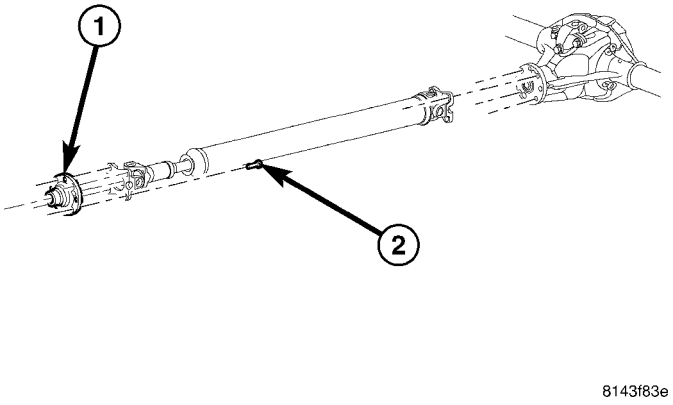

Fig. 13 MANUAL TRANSMISSION

1 - FLANGE
2 - FLANGE BOLT

(4) On 4x2 vehicles with manual transmission remover transmission companion flange (1) bolts (2) (Fig. 13).

(5) Remove pinion companion flange bolts.

(6) Remove propeller shaft.

INSTALLATION

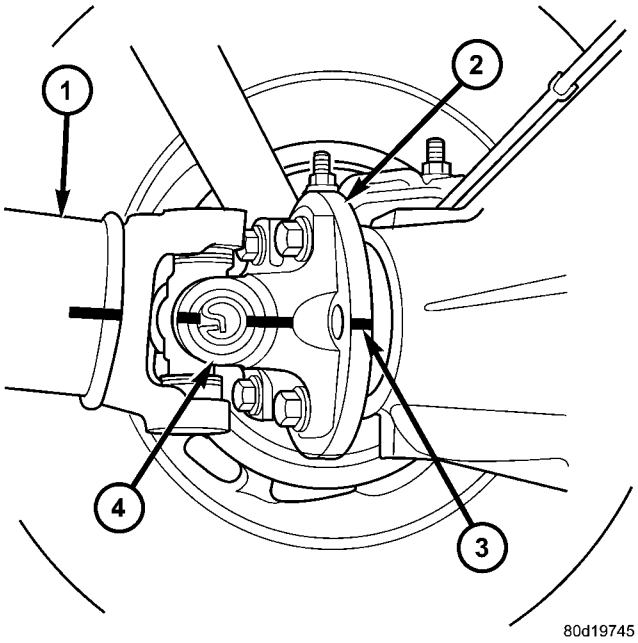

Fig. 14 COMPANION FLANGE

1 - PROPELLER SHAFT
2 - PINION COMPANION FLANGE
3 - REFERENCE MARK
4 - PROPELLER SHAFT COMPANION FLANGE

(1) Slide slip yoke on the transmission/transfer case output shaft. On 4x2 vehicles with a manual transmission install transmission flange bolts and tighten to 115 N·m (85 ft. lbs.).

(2) Align reference marks (3) (Fig. 14) on companion flanges (2) (4) and propeller shaft (1).

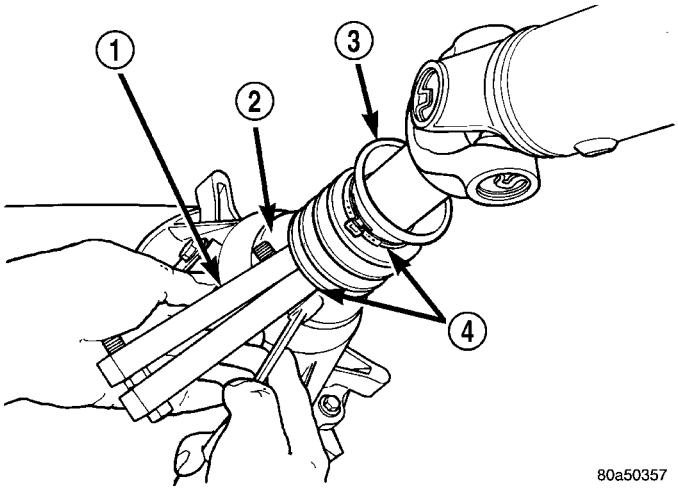

Fig. 15 CRIMPING BOOT CLAMP

1 - CLAMP TOOL
2 - SLINGER
3 - BOOT
4 - CLAMPS

SHAFT-PROPELLER REAR (Continued)

(3) Install companion flange bolts and tighten to 115 N·m (85 ft. lbs.).

(4) Tighten dust boot (3) (Fig. 15) clamp (4) if equipped with Clamp C-4975A (1).

UNIVERSAL JOINT-SINGLE CARDAN

DISASSEMBLY - WITH SNAP RINGS

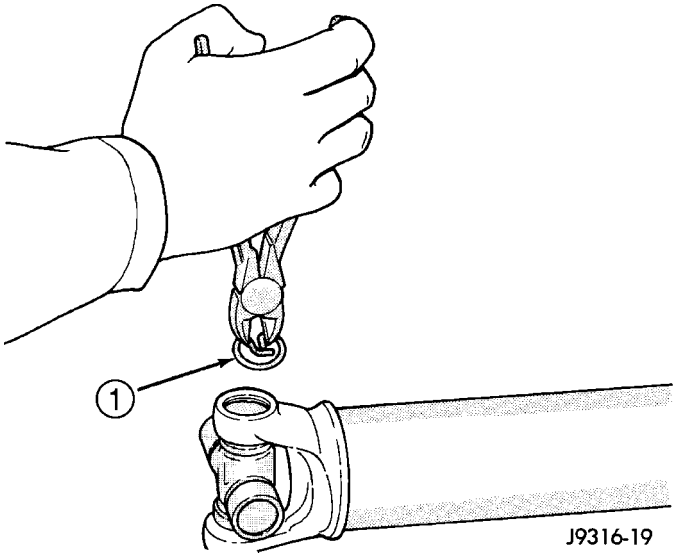

Fig. 16 REMOVE SNAP RING

1 - SNAP-RING

NOTE: This procedure describes a propeller shaft equipped with a cardan joint in the tube yoke. For propeller shafts equipped with a companion/slip yoke, repeat the steps to remove the remaining cardan joint.

(1) Tap outside of bearing cap with a drift to loosen snap ring.

(2) Remove snap rings (1) (Fig. 16) from both sides of yoke.

(3) Position yoke with the grease fitting if equipped, pointing up.

(4) Position a socket (2) (Fig. 17)w ith a inside diameter large enough to receive the bearing cap, beneath the yoke on a press.

(5) Place another socket (2) with an outside diameter smaller than bearing cap on the upper bearing cap and press (1) the lower cap through the yoke.

NOTE: If the bearing cap will not pull out of the yoke by hand after pressing, tap the yoke ear near the bearing cap to dislodge the cap.

(6) Pull bearing cap of the yoke.

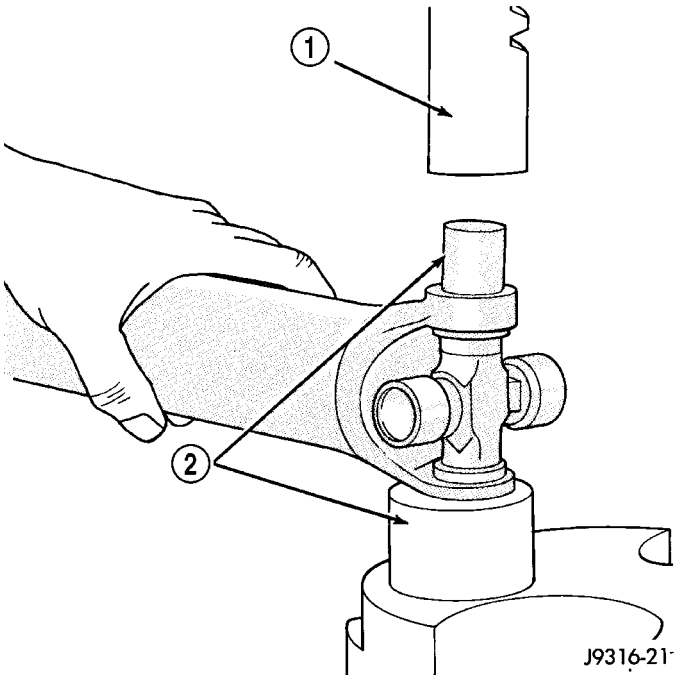

Fig. 17 PRESS OUT BEARING

1 - PRESS
2 - SOCKET

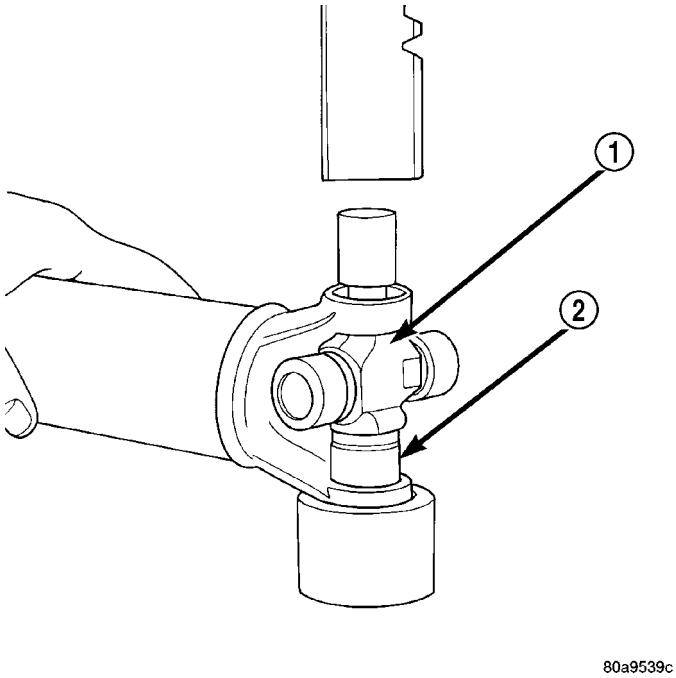

Fig. 18 PRESS OUT REMAINING BEARING

1 - CROSS
2 - BEARING CAP

(7) Turn yoke over in the press and straighten the cross (1) (Fig. 18). Press the cross until the remaining bearing cap (2) can be removed.

UNIVERSAL JOINT-SINGLE CARDAN (Continued)

CAUTION: If cross or bearing cap are not straight during removal, the bearing cap will score the walls of the yoke bore and damage can occur.

ASSEMBLY - WITH SNAP RINGS

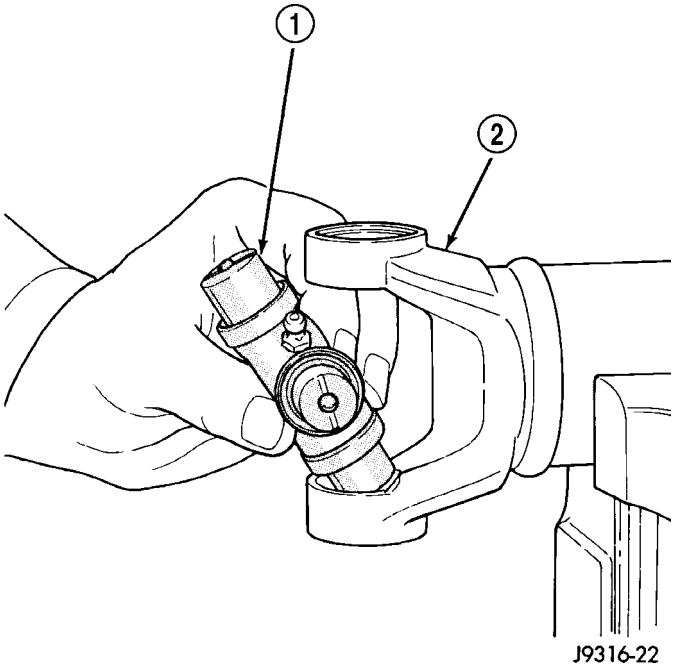

Fig. 19 CROSS IN YOKE

1 - CROSS
2 - YOKE

NOTE: This procedure describes a propeller shaft equipped a cardan joint in the tube yoke. For propeller shafts equipped with a companion/slip yoke, repeat the steps to remove the remaining cardan joint.

(1) Apply (EP) N.L.G.I. Grade 1 or 2 grease to inside of yoke bores.

(2) Position cross (1) (Fig. 19) in yoke (2) with lube fitting pointing up, if equipped.

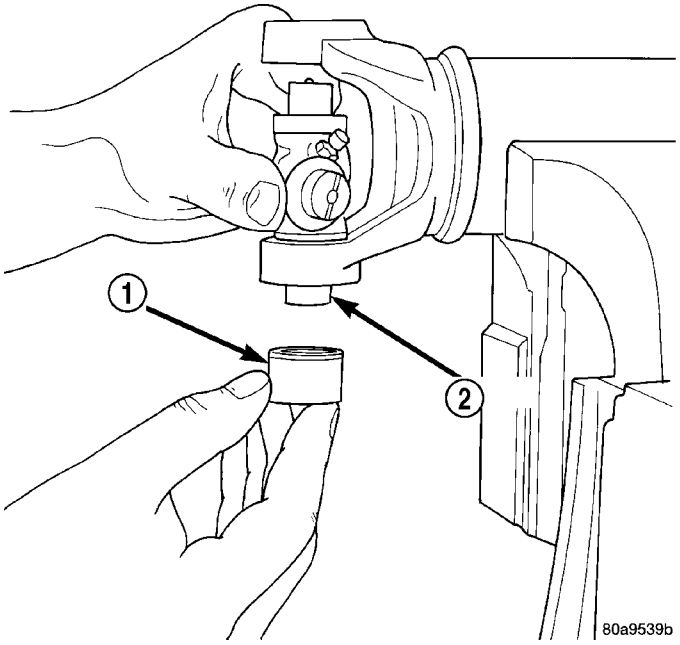

Fig. 20 BEARING ON CROSS

1 - BEARING CAP
2 - CROSS END

(3) Place a bearing cap (1) (Fig. 20) over the cross end (2) and align cap with yoke bore.

(4) Press bearing cap into the yoke bore enough to clear snap ring groove.

(5) Repeat Step 3 and Step 4 to install the opposite bearing cap.

NOTE: If joint is stiff or binding, strike the yoke with a soft hammer to seat the needle bearings.

(6) Add grease to lube fitting, if equipped.

HALF SHAFT

TABLE OF CONTENTS

	page
HALF SHAFT	
CAUTION	10
DIAGNOSIS AND TESTING	
HALF SHAFT	10
REMOVAL	10
INSTALLATION	11
SPECIFICATIONS	12
SPECIAL TOOLS	12
JOINT/BOOT-C/V OUTER	
REMOVAL	13
INSTALLATION	14
JOINT/BOOT-C/V INNER	
REMOVAL	16
INSTALLATION	18

HALF SHAFT

CAUTION

CAUTION:: Never grasp half shaft assembly by the boots. This may cause the boot to pucker or crease and reduce the service life of the boot.
Avoid over angulating or stroking the C/V joints when handling the half shaft.
Half shafts exposed to battery acid, transmission fluid, brake fluid, differential fluid or gasoline may cause the boots to deteriorate. Failure to follow these instruction will result in damage.

DIAGNOSIS AND TESTING

HALF SHAFT

Check inboard and outboard C/V joint for leaking grease. This is a sign of boot or boot clamp damage.

NOISE/VIBRATION IN TURNS

A clicking noise or vibration in turns could be caused by a damaged outer C/V or inner tripod joint seal boot or seal boot clamps. This will result in the loss/contamination of the joint grease, resulting in inadequate lubrication of the joint. Noise could also be caused by another component of the vehicle coming in contact with the half shafts.

CLUNKING NOISE DURING ACCELERATION

This noise may be a damaged or worn C/V joint. A torn boot or loose/missing clamp on the inner/outer joint which has allowed the grease to be lost will damage the C/V joint.

SHUDDER/VIBRATION DURING ACCELERATION

This could be a worn/damaged inner tripod joint or a sticking tripod joint. Improper wheel alignment may also cause a shudder or vibration.

VIBRATION AT HIGHWAY SPEEDS

This problem could be a result of out of balance front tires or tire/wheel runout. Foreign material (mud, etc.) packed on the backside of the wheel(s) will also cause a vibration.

REMOVAL

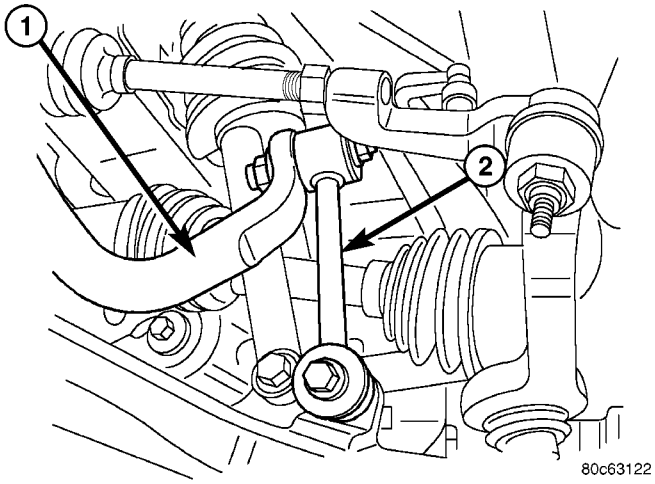

Fig. 1 STABILIZER BAR LINK

1 - STABILIZER BAR
2 - STABILIZER BAR LINK

(1) With vehicle in neutral, position vehicle on hoist.

(2) Remove half shaft hub nut.

HALF SHAFT (Continued)

(3) Remove stabilizer link (2) (Fig. 1) from stabilizer bar (1).

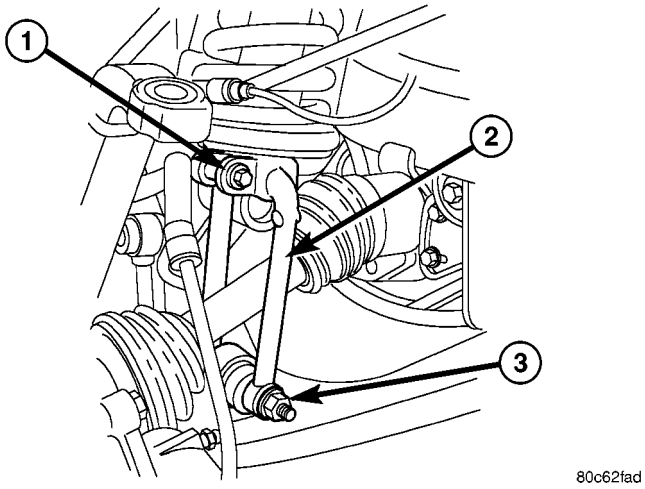

Fig. 2 CLEVIS BRACKET

1 - UPPER BOLT
2 - CLEVIS BRACKET
3 - LOWER BOLT

(4) Remove clevis bracket (2) lower bolt (3) (Fig. 2).

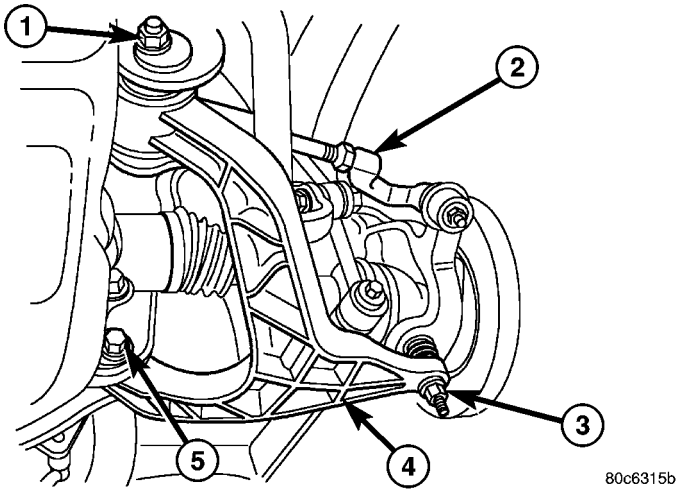

Fig. 3 LOWER CONTROL ARM

1 - FRONT CAM BOLT
2 - OUTER TIE ROD END
3 - LOWER BALL JOINT NUT
4 - LOWER CONTROL ARM
5 - REAR CAM BOLT

(5) Remover lower ball joint nut (3) and separate lower ball joint from the lower control arm (4) (Fig. 3).

(6) Pull out on the steering knuckle and push the half shaft out of the knuckle.

(7) With a pry bar remove the half shaft from the axle.

NOTE: Right side half shaft has an axle shaft that may come out of the axle.

INSTALLATION

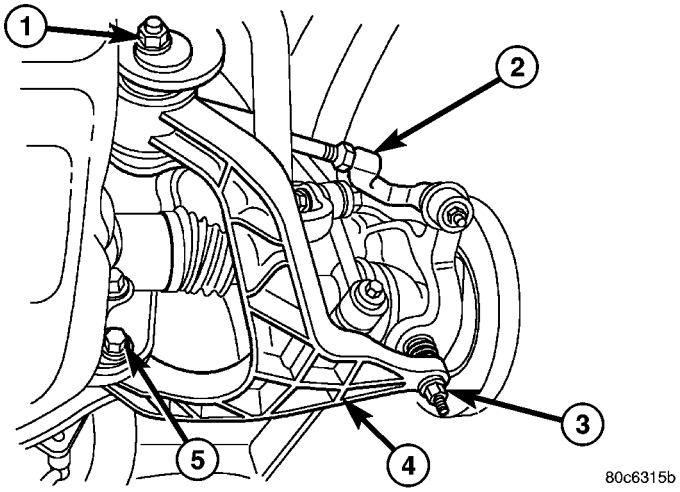

Fig. 4 LOWER CONTROL ARM

1 - FRONT CAM BOLT
2 - OUTER TIE ROD END
3 - LOWER BALL JOINT NUT
4 - LOWER CONTROL ARM
5 - REAR CAM BOLT

HALF SHAFT (Continued)

NOTE: Seperate right half shaft from axle shaft in a vise if necessary and install axle shaft in the axle.

(1) Apply a light coat of wheel bearing grease on the female splines of the inner C/V joint.

(2) Install half shaft on the axle shaft spline and push firmly to engage the snap ring. Pull on the half shaft to verify snap has engaged.

(3) Clean hub bearing bore and apply a light coat of wheel bearing grease.

(4) Pull out on the steering knuckle and push the half shaft through the knuckle.

(5) Install lower ball joint (3) into the lower control arm (4) and tighten pinch bolt (Fig. 4).

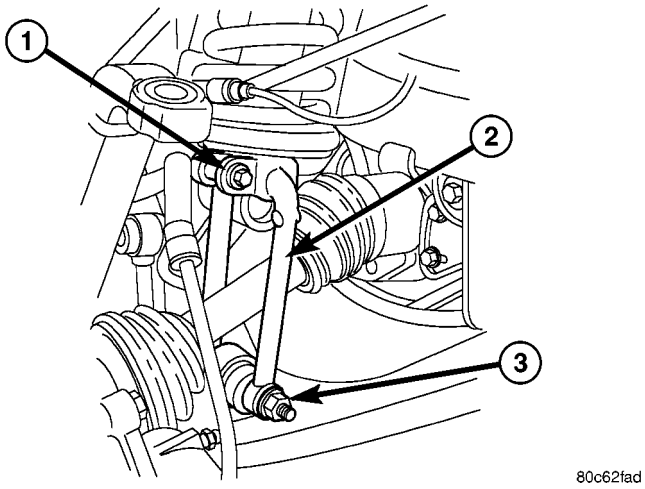

Fig. 5 CLEVIS BRACKET

1 - UPPER BOLT
2 - CLEVIS BRACKET
3 - LOWER BOLT

(6) Align clevis (2) with knuckle. Install and tighten lower clevis bolt (3) to specifications (Fig. 5).

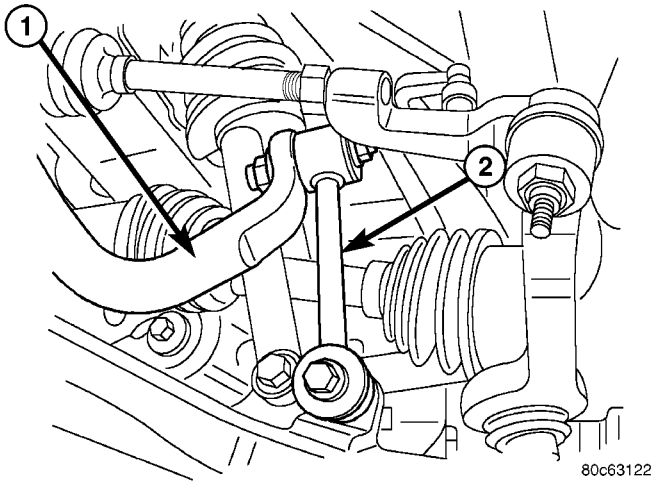

Fig. 6 STABILIZER BAR LINK

1 - STABILIZER BAR
2 - STABILIZER BAR LINK

(7) Install stabilizer bar link (2) on stabilizer bar (1) (Fig. 6).

(8) Install half shaft hub nut and tighten to specifications.

SPECIFICATIONS

TORQUE SPECIFICATIONS

DESCRIPTION	N·m	Ft. Lbs.	In. Lbs.
Half Shaft Nut	136	100	-

SPECIAL TOOLS

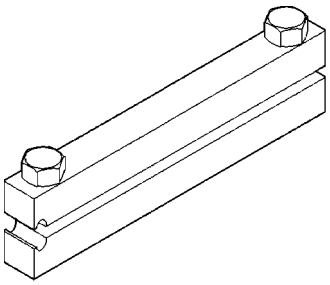

CLAMP INSTALLER C-4975A

JOINT/BOOT-C/V OUTER

REMOVAL

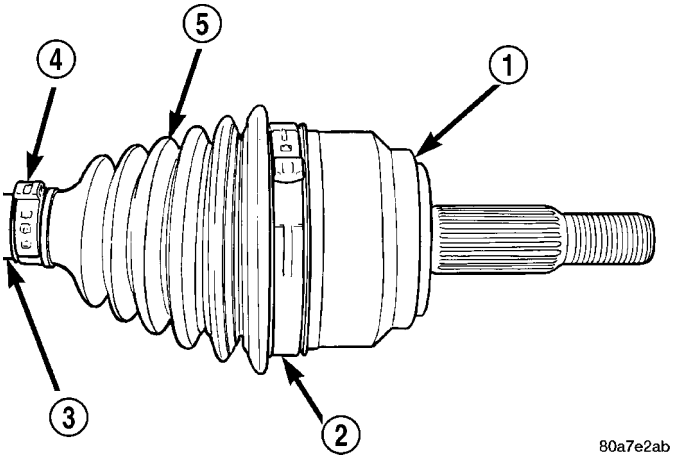

Fig. 7 BOOT CLAMP LOCATIONS

1 - C/V HOUSING
2 - CLAMP
3 - HALF SHAFT
4 - CLAMP
5 - C/V BOOT

(1) Place shaft in vise with soft jaws and support C/V joint.

CAUTION: Do not damage C/V housing or half shaft.

(2) Remove clamps (2) (4) with a cut-off wheel or grinder (Fig. 7).

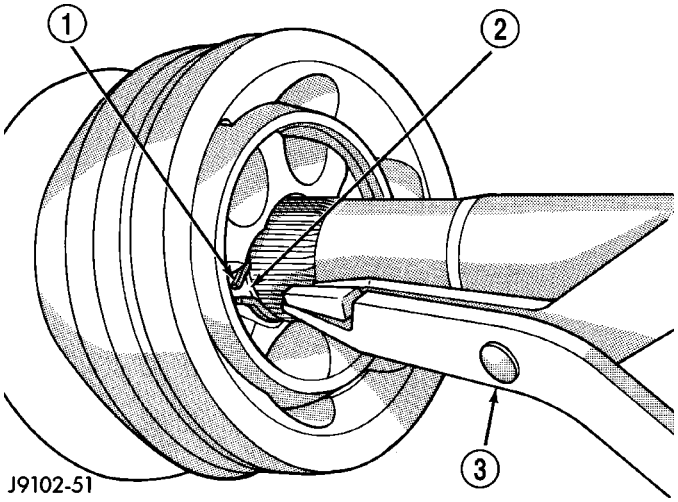

Fig. 8 OUTER C/V JOINT

1 - SNAP RING
2 - SNAP RING GROVE
3 - SNAP RING PLIERS

(3) Slide the boot down the shaft.

(4) Remove lubricant to expose the C/V joint snap ring.

(5) Spread snap ring (1) and slide the joint off the shaft (Fig. 8).

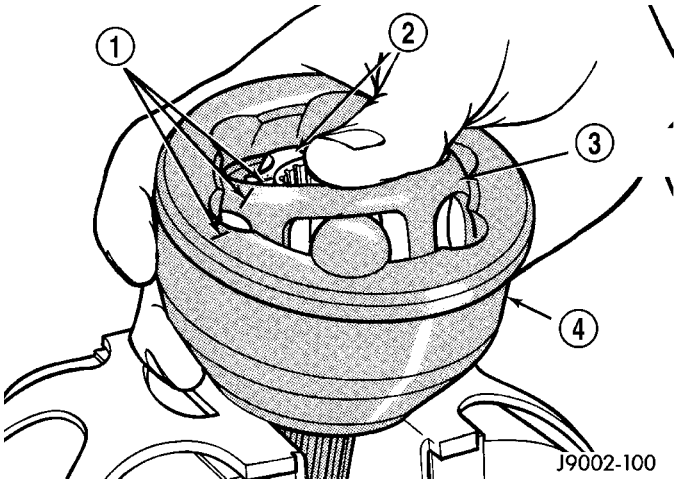

Fig. 9 BEARING ACCESS

1 - ALIGNMENT MARKS
2 - BEARING HUB
3 - BEARING CAGE
4 - HOUSING

(6) Slide boot off the shaft and discard old boot.

(7) Mark alignment marks (1) on the inner race/hub (2), bearing cage (3) and housing with dabs of paint (Fig. 9).

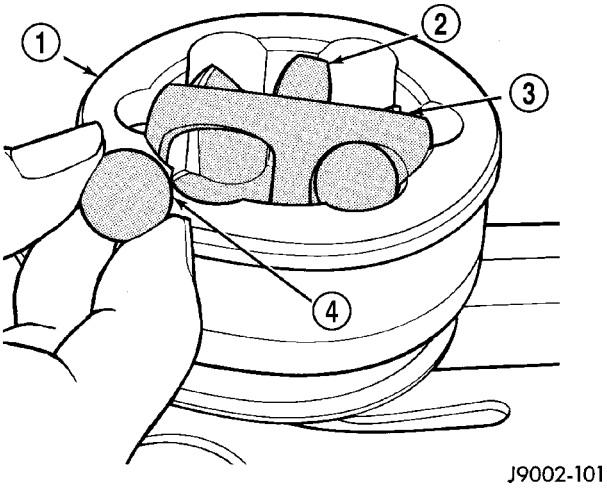

Fig. 10 BEARING

1 - HOUSING
2 - INNER RACE/HUB
3 - BEARING CAGE
4 - BALL

(8) Clamp C/V joint in a vertical position in a soft jawed vise.

(9) Press down one side of the bearing cage (3) to gain access to the ball at the opposite side.

NOTE: If joint is tight, use a hammer and brass drift to loosen the bearing hub. Do not contact the bearing cage with the drift.

JOINT/BOOT-C/V OUTER (Continued)

(10) Remove ball (4) from the bearing cage (3) (Fig. 10).

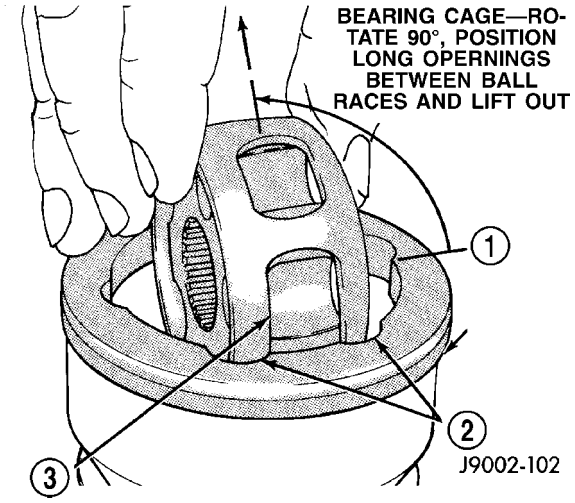

Fig. 11 CAGE AND INNER RACE/HUB

1 - HOUSING
2 - INNER RACE
3 - CAGE WINDOW

(11) Repeat step above until all six balls are removed from the bearing cage.

(12) Lift cage and inner race (2) upward and out from the housing (1) (Fig. 11).

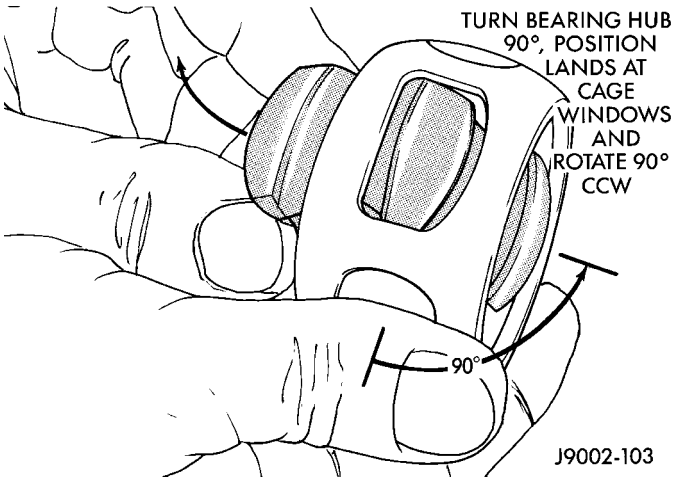

Fig. 12 INNER RACE/HUB

(13) Turn inner race 90° in the cage and rotate the inner race/hub out of the cage (Fig. 12).

INSTALLATION

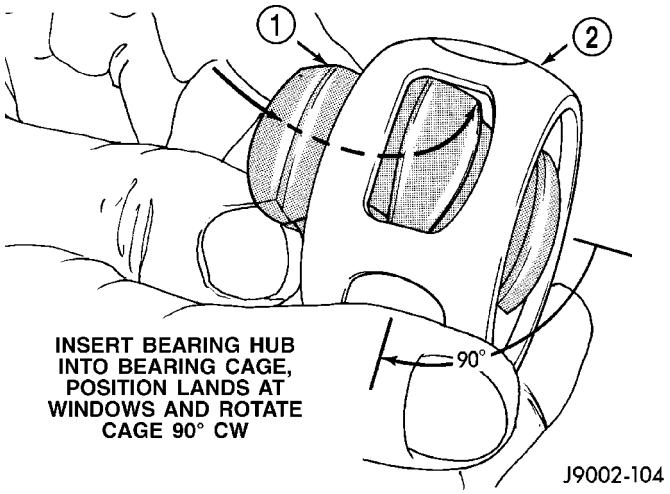

Fig. 13 INNER RACE/HUB

1 - INNER RACE/HUB
2 - BEARING CAGE

(1) Apply a light coat of grease to the C/V joint components before assembling them.

(2) Align inner race, cage and housing according to the alignment reference marks.

(3) Insert inner race (1) into the cage (2) (Fig. 13) and rotate race into the cage.

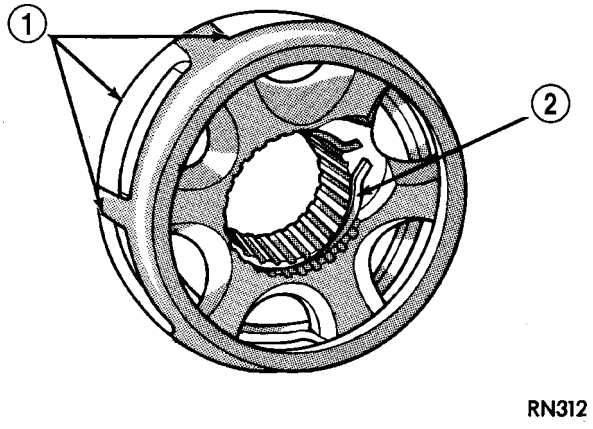

Fig. 14 CAGE AND INNER RACE/HUB

1 - CAGE WINDOWS
2 - SNAP RING

JOINT/BOOT-C/V OUTER (Continued)

(4) Rotate inner race/hub in the cage (1) (Fig. 14).

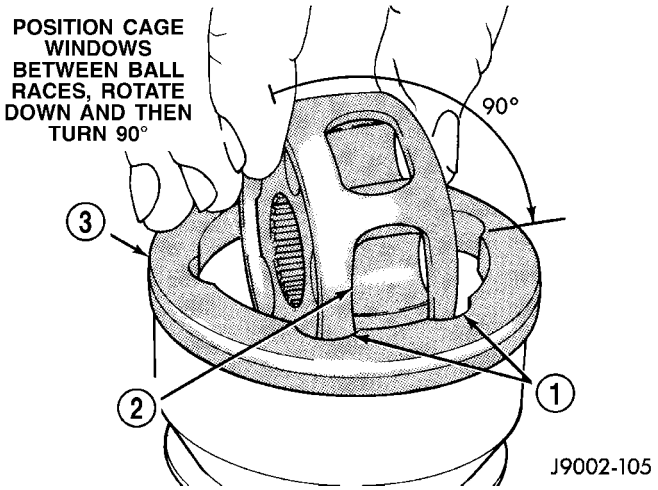

Fig. 15 BEARING CAGE AND HOUSING

1 - OUTER RACE
2 - BEARING CAGE WINDOW
3 - CV JOINT HOUSING

(5) Insert cage into the housing (3) (Fig. 15).

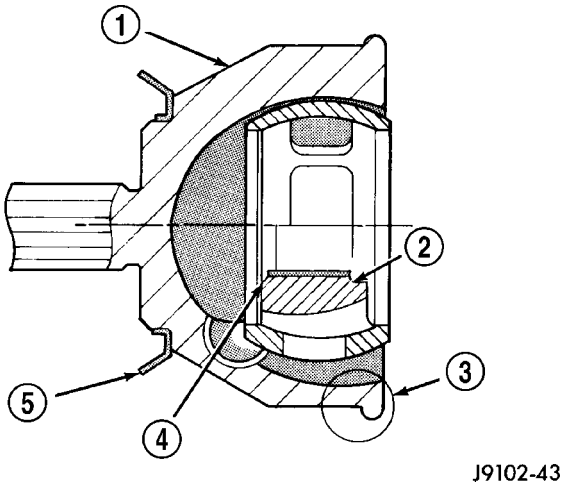

Fig. 16 CAGE AND INNER RACE/HUB

1 - C/V HOUSING
2 - BEARING HUB LARGE COUNTERBORE OUTWARD
3 - BOOT RETAINING SHOULDER
4 - BEARING HUB SMALL COUNTERBORE INWARD
5 - SLINGER

(6) Rotate cage 90° into the housing (1) (Fig. 16).

(7) Apply lubricant included with replacement boot/joint to the ball races. Spread lubricant equally between all the races.

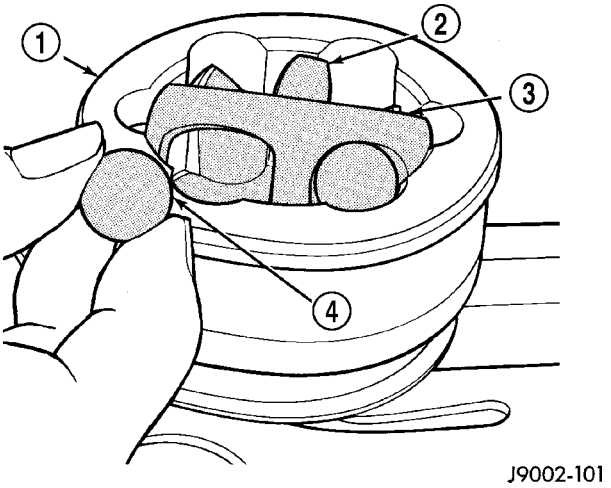

Fig. 17 BALL BEARING

1 - C/V HOUSING
2 - INNER RACE/HUB
3 - BEARING CAGE
4 - BEARING

(8) Tilt inner race/hub (2) and cage (3) and install the balls (4) (Fig. 17).

(9) Place new clamps onto new boot and slide boot onto the shaft to it's original position.

(10) Apply the rest of lubricant to the C/V joint and boot.

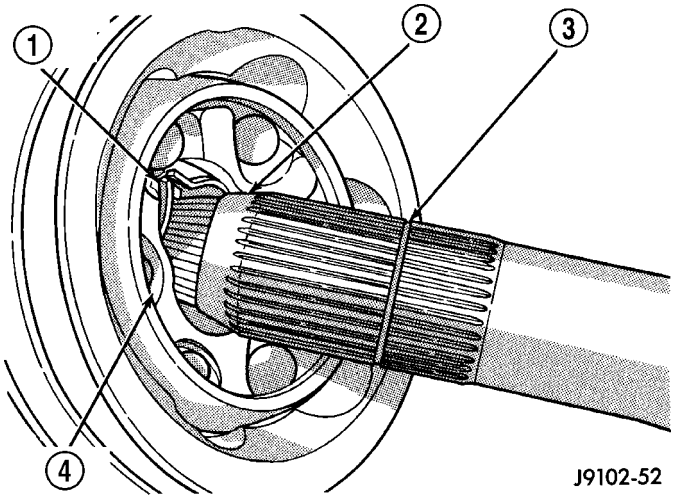

Fig. 18 OUTER C/V JOINT

1 - SNAP RING
2 - SHAFT TAPER
3 - SNAP RING GROVE
4 - BEARING HUB

JOINT/BOOT-C/V OUTER (Continued)

(11) Push the joint onto the shaft until the snap ring (1) seats in the groove (3) (Fig. 18). Pull on the joint to verify the span ring has engaged.

(12) Position boot on the joint in it's original position. Ensure boot is not twisted and remove any excess air.

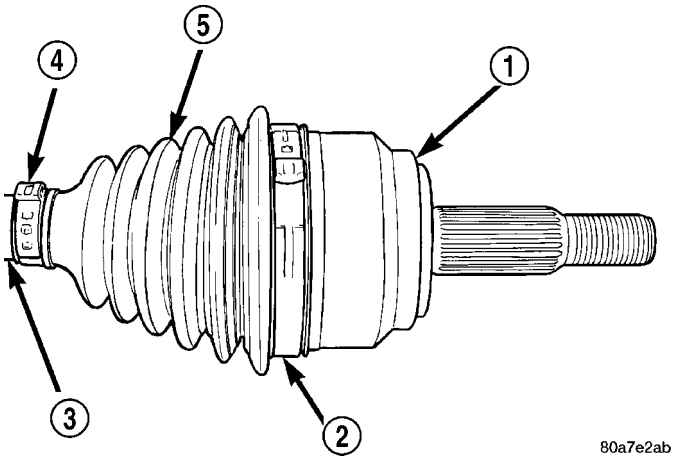

Fig. 19 BOOT CLAMP LOCATIONS

1 - C/V HOUSING
2 - CLAMP
3 - HALF SHAFT
4 - CLAMP
5 - C/V BOOT

(13) Secure both boot clamps (2) (4) (Fig. 19) with Clamp Installer C-4975A. Place tool on clamp bridge and tighten tool until the jaws of the tool are closed.

JOINT/BOOT-C/V INNER

REMOVAL

(1) Clamp shaft in a vise (with soft jaws) and support C/V joint (1).

(2) Remove clamps with a cut-off wheel or grinder.

(3) Slide boot down (2) the shaft (Fig. 20).

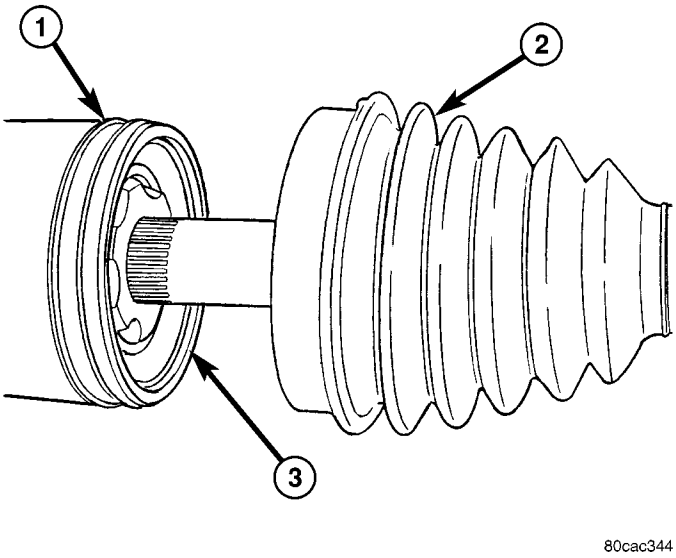

Fig. 20 INNER C/V BOOT

1 - HOUSING
2 - BOOT
3 - HOUSING SNAP RING

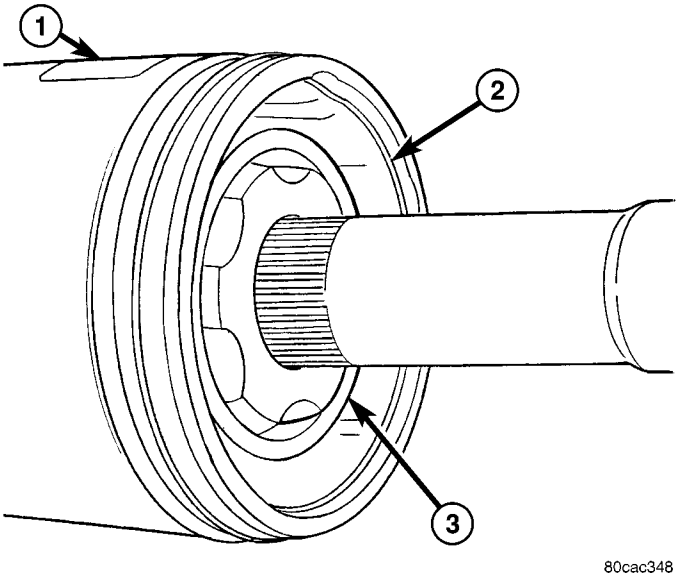

Fig. 21 HOUSING SNAP RING

1 - HOUSING
2 - SNAP RING
3 - CAGE/INNER RACE

JOINT/BOOT-C/V INNER (Continued)

(4) Remove lubricant from housing (1) to expose the C/V snap ring (2) and remove snap ring (Fig. 21).

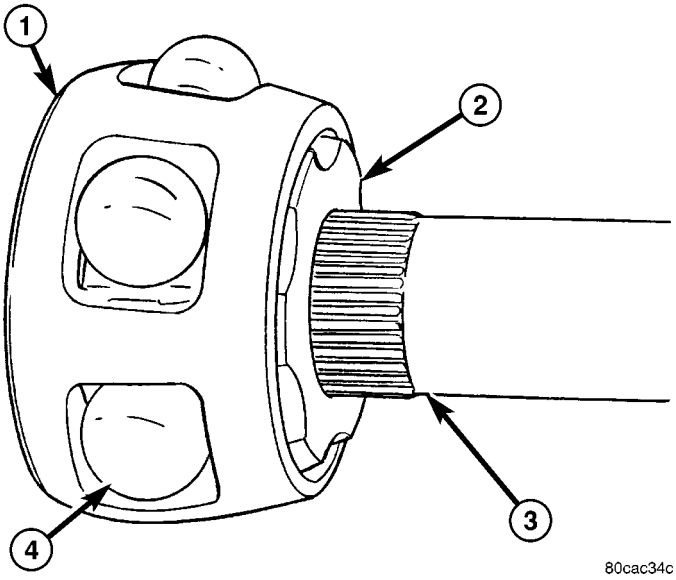

Fig. 22 C/V BEARINGS

1 - CAGE
2 - INNER RACE
3 - SHAFT
4 - BEARING

(5) Remove bearings (4) from the cage (1).

(6) Rotate cage (1) 30° and slide cage off the inner race (2) and down the shaft (3) (Fig. 22).

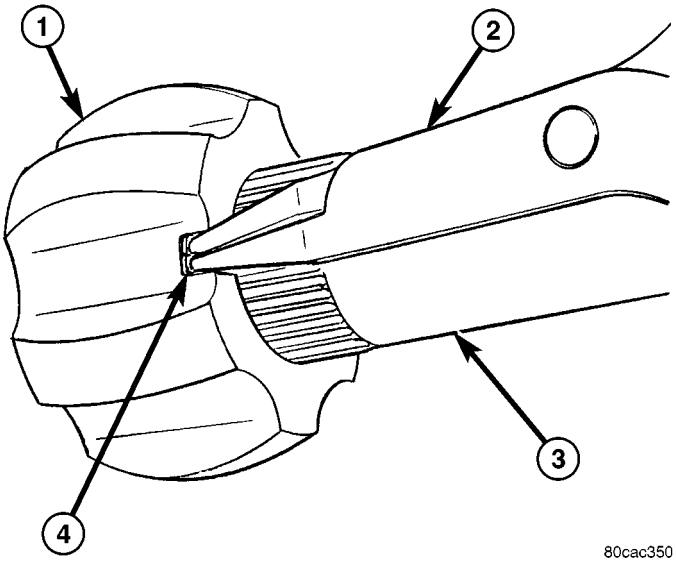

Fig. 23 INNER RACE

1 - INNER RACE
2 - PLIERS
3 - SHAFT
4 - SNAP RING ACCESS

(7) Remove spread inner race (1) snap ring (4) and remove race (1) from the shaft (3) (Fig. 23).

(8) Remove boot from the shaft and discard.

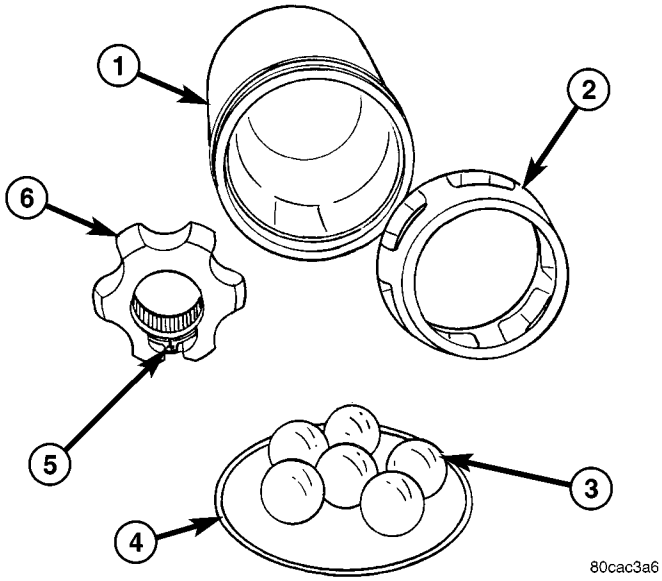

Fig. 24 INNER C/V JOINT

1 - HOUSING
2 - CAGE
3 - BEARINGS
4 - HOUSING SNAP RING
5 - INNER RACE SNAP RING
6 - INNER RACE

(9) Clean and inspect housing (1), cage (2), bearings (3), housing snap-ring (4), inner race snap-ring (5) and inner race (6) for wear or damage (Fig. 24).

JOINT/BOOT-C/V INNER (Continued)

INSTALLATION

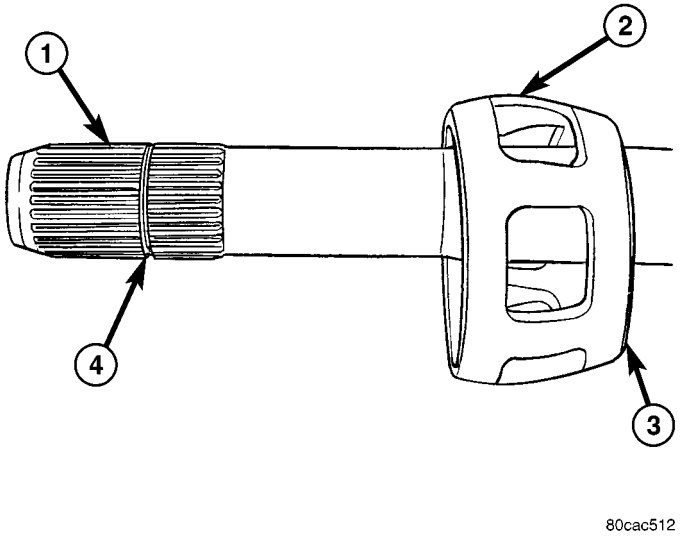

Fig. 25 BEARING CAGE

1 - SHAFT
2 - CAGE
3 - SMALL DIAMETER
4 - SNAP RING GROOVE

(1) Apply a coat of grease supplied with the joint/boot to the C/V joint components before assembling them.

(2) Place new clamps on the new boot and slide boot down the shaft.

(3) Slide cage (2) (Fig. 25) onto the shaft (1) with the small diameter (3) end towards the boot.

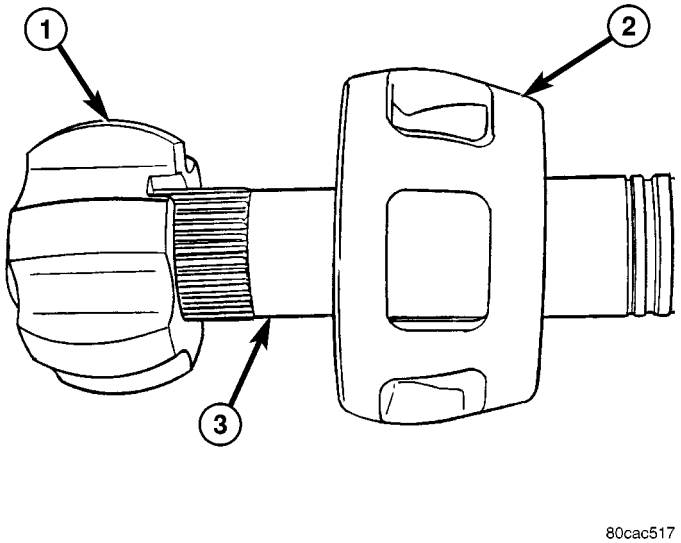

Fig. 26 INNER RACE

1 - INNER RACE
2 - CAGE
3 - SHAFT

(4) Install the inner race (1) (Fig. 26) onto the shaft (3). Pull on the race to verify snap ring has engaged.

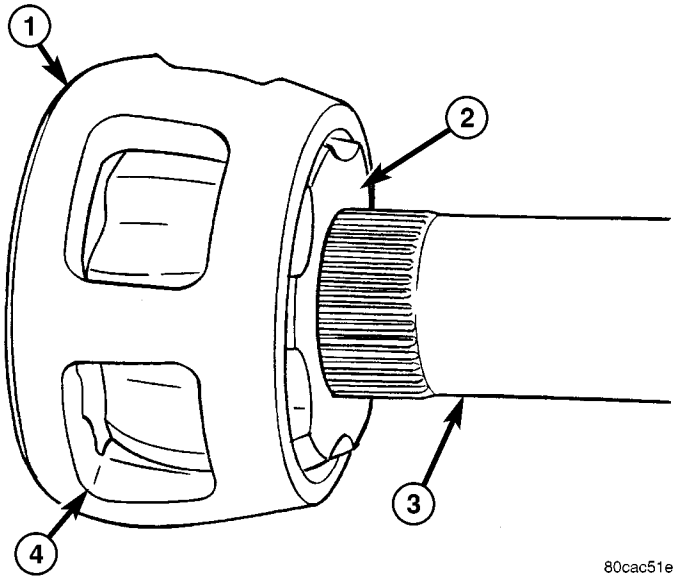

Fig. 27 CAGE/INNER RACE

1 - CAGE
2 - INNER RACE
3 - SHAFT
4 - CAGE WINDOW

(5) Align cage (1) (Fig. 27) with the inner race (2) and slide over the race.

(6) Turn the cage 30° to align the cage windows (4) with the race (2).

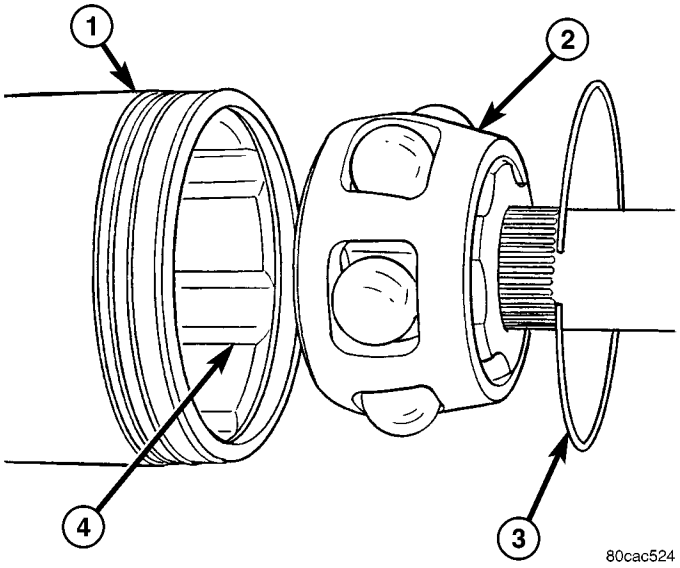

Fig. 28 C/V COMPONENTS

1 - HOUSING
2 - BEARING ASSEMBLY
3 - HOUSING SNAP RING
4 - HOUSING BORE

JOINT/BOOT-C/V INNER (Continued)

(7) Apply grease to the inner race and bearings and install the bearings.

(8) Apply grease to the housing bore (4) (Fig. 28) then install the bearing assembly (2) into the housing (1).

(9) Install the housing snap ring (3) and verify it is seated in the groove.

(10) Fill the housing and boot with the remaining grease.

(11) Slide the boot onto the C/V housing into it's original position. Ensure boot is not twisted and remove any excess air.

(12) Secure both boot clamps with Clamp Installer C-4975A. Place tool on clamp bridge and tighten tool until the jaws of the tool are closed.

FRONT AXLE - 186FIA

TABLE OF CONTENTS

	page
FRONT AXLE - 186FIA	
DIAGNOSIS AND TESTING	
FRONT AXLE - 186FIA	20
REMOVAL	24
INSTALLATION	26
ADJUSTMENTS	27
SPECIFICATIONS	33
SPECIAL TOOLS	35
COVER-DIFFERENTIAL	
REMOVAL	38
INSTALLATION	38
SHAFT-AXLE	
REMOVAL	40
INSTALLATION	40
SEAL-AXLE SHAFT	
REMOVAL	40
INSTALLATION	41
BEARING-AXLE	
REMOVAL	41
INSTALLATION	41
SEAL-PINION	
REMOVAL	42
INSTALLATION	42
DIFFERENTIAL	
REMOVAL	43
DISASSEMBLY	44
ASSEMBLY	45
INSTALLATION	45
BEARING-DIFFERENTIAL CASE	
REMOVAL	46
INSTALLATION	47
GEAR-PINION/RING	
REMOVAL	47
INSTALLATION	49

FRONT AXLE - 186FIA

DIAGNOSIS AND TESTING

FRONT AXLE - 186FIA

GEAR NOISE

Axle gear noise can be caused by insufficient lubricant, incorrect backlash, tooth contact, worn/damaged gears or the carrier housing not having the proper offset and squareness.

Gear noise usually happens at a specific speed range. The noise can also occur during a specific type of driving condition. These conditions are acceleration, deceleration, coast, or constant load.

When road testing, first warm-up the axle fluid by driving the vehicle at least 5 miles and then accelerate the vehicle to the speed range where the noise is the greatest. Shift out-of-gear and coast through the peak-noise range. If the noise stops or changes greatly check for:

- Insufficient lubricant.
- Incorrect ring gear backlash.
- Gear damage.

Differential side and pinions gears, usually do not cause noise during straight-ahead driving, when the gears are unloaded. The side gears are loaded during turns. A worn pinion mate shaft can also cause a snapping or a knocking noise.

BEARING NOISE

Bearing noise can be either a whining or a growling sound.

Pinion bearings have a constant high pitch noise, because it rotates at a faster rate. This noise changes with vehicle speed. If noise is heard under a load, the rear pinion bearing is the source. If noise is heard during a coast, the front pinion bearing is the source.

Differential bearings usually produce a low pitch noise. The differential bearing noise is constant and varies only with vehicle speed.

Axle shaft bearing noise generally changes when the bearings are loaded. Turn vehicle sharply to the left and the right during a road test. This will load and unload the bearings and change the noise level. If axle bearing damage is slight, the noise is usually not noticeable at speeds above 30 m.p.h.

LOW SPEED KNOCK

Low speed knock is generally caused by:

- Worn U-joints/CV joint.
- Worn side-gear thrust washers.
- Worn pinion shaft bore.

VIBRATION

Vibration at the rear of the vehicle is usually caused by:

- Damaged drive shaft.
- Missing drive shaft balance weight(s).
- Worn or out-of-balance wheels.

FRONT AXLE - 186FIA (Continued)

- Loose wheel lug nuts.
- Worn U-joints/CV joint.
- Loose/broken springs.
- Damaged axle shaft bearing(s).
- Loose pinion gear nut.
- Excessive pinion yoke run out.
- Bent axle shaft(s).

Check for loose or damaged front-end components or engine/transmission mounts. These components can contribute to what appears to be an axle vibration. Also look at engine accessories, brackets and drive belts.

NOTE: All driveline components should be examined before starting any repair.

DRIVELINE SNAP

A snap or clunk noise when the vehicle is shifted into gear or the clutch engaged, can be caused by:

- High engine idle speed.
- Transmission shift operation.
- Loose engine/transmission/transfer case mounts.
- Worn U-joints/CV joint.
- Loose spring mounts.
- Loose pinion gear nut and yoke.
- Excessive ring gear backlash.
- Excessive side gear to case clearance.

To determined the source of a snap/clunk noise, raise vehicle on a hoist with the wheels free to rotate. Have a helper shift the transmission into gear and listen for the noise.

DIAGNOSTIC CHART

Condition	Possible Causes	Correction
Wheel Noise	1. Wheel loose.	1. Tighten loose nuts.
	2. Faulty, brinelled wheel bearing.	2. Replace bearing.
Axle Shaft Noise	1. Misaligned axle tube.	1. Inspect axle tube alignment. Correct as necessary.
	2. Bent or sprung axle shaft.	2. Inspect and correct as necessary.
	3. End-play in pinion bearings.	3. Refer to pinion pre-load information and correct as necessary.
	4. Excessive gear backlash between the ring gear and pinion.	4. Check adjustment of the ring gear and pinion backlash. Correct as necessary.
	5. Improper adjustment of pinion gear bearings.	5. Adjust the pinion bearings pre-load.
	6. Loose pinion yoke nut.	6. Tighten the pinion yoke nut.
	7. Scuffed gear tooth contact surfaces.	7. Inspect and replace as necessary.
Axle Shaft Broke	1. Misaligned axle tube.	1. Replace the broken shaft after correcting tube mis-alignment.
	2 Vehicle overloaded.	2. Replace broken shaft and avoid excessive weight on vehicle.
	3. Erratic clutch operation.	3. Replace broken shaft and avoid or correct erratic clutch operation.
	4. Grabbing clutch.	4. Replace broken shaft and inspect and repair clutch as necessary.

FRONT AXLE - 186FIA (Continued)

Condition	Possible Causes	Correction
Differential Cracked	1. Improper adjustment of the differential bearings.	1. Replace case and inspect gears and bearings for further damage. Set differential bearing pre-load properly.
	2. Excessive ring gear backlash.	2. Replace case and inspect gears and bearings for further damage. Set ring gear backlash properly.
	3. Vehicle overloaded.	3. Replace case and inspect gears and bearings for further damage. Avoid excessive vehicle weight.
	4. Erratic clutch operation.	4. Replace case and inspect gears and bearings for further damage. Avoid erratic use of clutch.
Differential Gears Scored	1. Insufficient lubrication.	1. Replace scored gears. Fill differential with the correct fluid type and quantity.
	2. Improper grade of lubricant.	2. Replace scored gears. Fill differential with the correct fluid type and quantity.
	3. Excessive spinning of one wheel/tire.	3. Replace scored gears. Inspect all gears, pinion bores, and shaft for damage. Service as necessary.
Loss Of Lubricant	1. Lubricant level too high.	1. Drain lubricant to the correct level.
	2. Worn axle shaft seals.	2. Replace seals.
	3. Cracked differential housing.	3. Repair as necessary.
	4. Worn pinion seal.	4. Replace seal.
	5. Worn/scored yoke.	5. Replace yoke and seal.
	6. Axle cover not properly sealed.	6. Remove, clean, and re-seal cover.
Axle Overheating	1. Lubricant level low.	1. Fill differential to correct level.
	2. Improper grade of lubricant.	2. Fill differential with the correct fluid type and quantity.
	3. Bearing pre-loads too high.	3. Re-adjust bearing pre-loads.
	4. Insufficient ring gear backlash.	4. Re-adjust ring gear backlash.

FRONT AXLE - 186FIA (Continued)

Condition	Possible Causes	Correction
Gear Teeth Broke	1. Overloading.	1. Replace gears. Examine other gears and bearings for possible damage.
	2. Erratic clutch operation.	2. Replace gears and examine the remaining parts for damage. Avoid erratic clutch operation.
	3. Ice-spotted pavement.	3. Replace gears and examine remaining parts for damage.
	4. Improper adjustments.	4. Replace gears and examine remaining parts for damage. Ensure ring gear backlash is correct.
Axle Noise	1. Insufficient lubricant.	1. Fill differential with the correct fluid type and quantity.
	2. Improper ring gear and pinion adjustment.	2. Check ring gear and pinion contact pattern.
	3. Unmatched ring gear and pinion.	3. Replace gears with a matched ring gear and pinion.
	4. Worn teeth on ring gear and/or pinion.	4. Replace ring gear and pinion.
	5. Loose pinion bearings.	5. Adjust pinion bearing pre-load.
	6. Loose differential bearings.	6. Adjust differential bearing pre-load.
	7. Mis-aligned or sprung ring gear.	7. Measure ring gear run-out. Replace components as necessary.
	8. Loose differential bearing cap bolts.	8. Inspect differential components and replace as necessary. Ensure that the bearing caps are torqued tot he proper specification.
	9. Housing not machined properly.	9. Replace housing.

FRONT AXLE - 186FIA (Continued)

REMOVAL

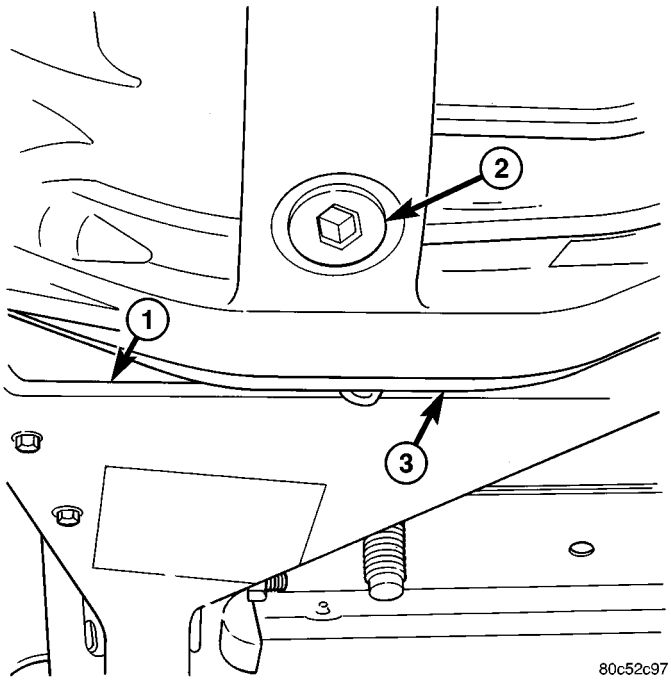

Fig. 1 DRAIN PLUG

1 - LEFT FRONT AXLE BRACKET
2 - DRAIN PLUG
3 - DIFFERENTIAL HOUSING

(1) With vehicle in neutral, position vehicle on hoist.

(2) Remove skid plate.

(3) Remove differential housing (3) drain plug (2) and drain fluid (Fig. 1).

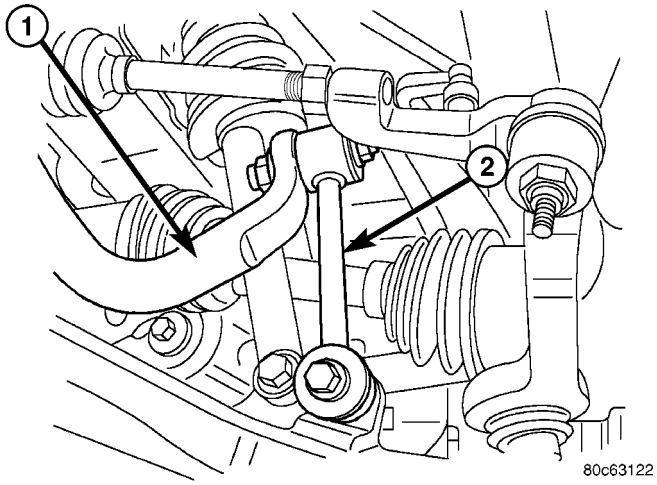

Fig. 2 STABILIZER BAR LINK

1 - STABILIZER BAR
2 - STABILIZER BAR LINK

(4) Mark front propeller shaft and pinion flange. Remove propeller shaft from pinion flange.

(5) Remove half shaft hub nuts.

(6) Remove stabilizer bar (1) links (2) from the lower control arms (Fig. 2).

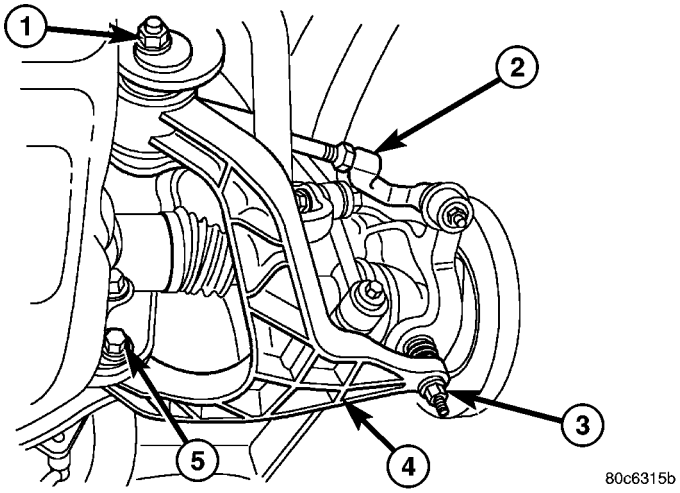

Fig. 3 LOWER CONTROL ARM

1 - FRONT CAM BOLT
2 - OUTER TIE ROD END
3 - LOWER BALL JOINT NUT
4 - LOWER CONTROL ARM
5 - REAR CAM BOLT

(7) Remove tie rod end (2) nuts and separate ends from the knuckles (Fig. 3).

(8) Remove lower ball joint nuts (3) and separate ball joints from the lower control arms (4) (Fig. 3).

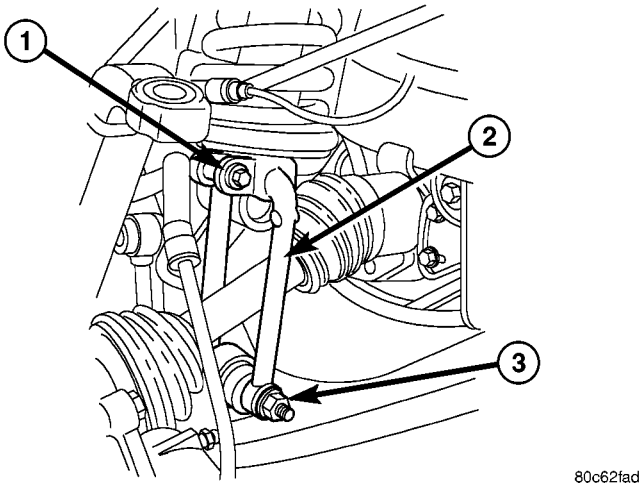

Fig. 4 CLEVIS BRACKET

1 - UPPER BOLT
2 - CLEVIS BRACKET
3 - LOWER BOLT

(9) Remove shock clevis (2) lower bolts (3) (Fig. 4).

(10) Pull out on the steering knuckles and push the half shaft out of the knuckles.

(11) With a pry bar remove the half shafts from the axle.

FRONT AXLE - 186FIA (Continued)

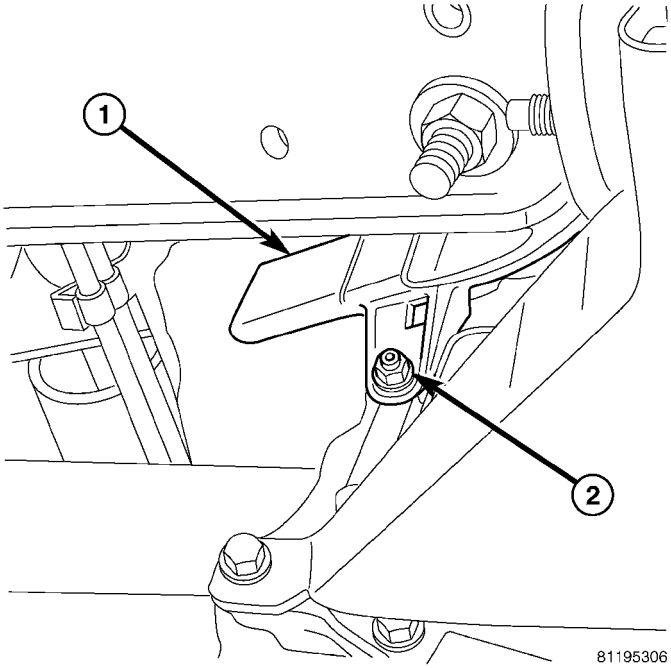

Fig. 5 DRAIN TROUGH

1 - TROUGH
2 - MOUNTING NUT

NOTE: Right half shaft has a splined axle that may come out with the half shaft.

(12) Remove differential vent hose from cover and remove drain trough (1) nut (2) (Fig. 5).

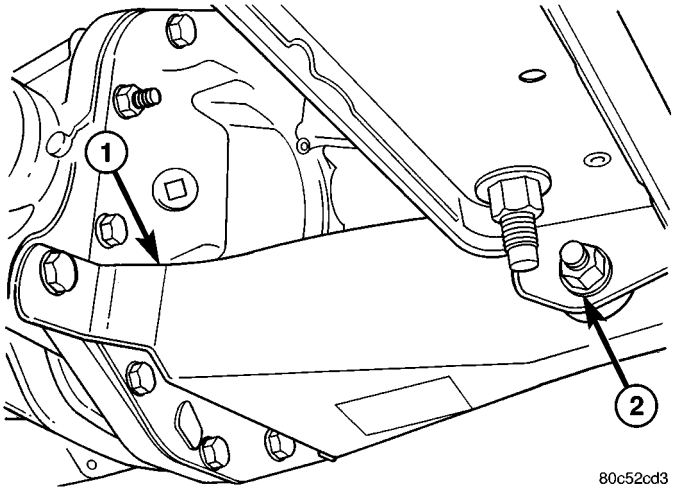

Fig. 6 LEFT FRONT AXLE BRACKET

1 - LEFT FRONT AXLE BRACKET
2 - CRADLE BRACKET BOLT

(13) Support axle with a lift/jack.

(14) Remove bolts from left front axle bracket (1) and cradle bracket bolt (Fig. 6).

(15) Remove oil filter drip tray.

(16) Mark and remove right control arm cam bolt.

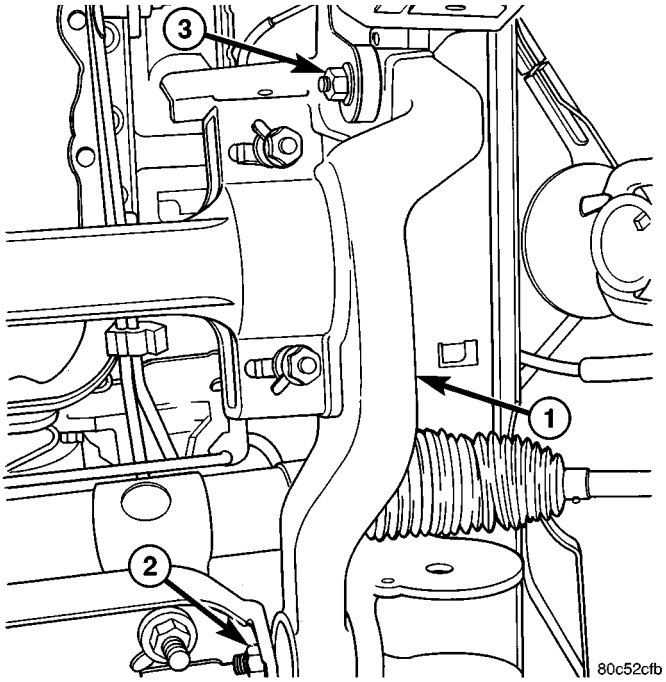

Fig. 7 RIGHT AXLE BRACKET

1 - RIGHT AXLE BRACKET
2 - FRONT BRACKET BOLT
3 - REAR BRACKET BOLT

(17) Remove front bolt (2) and rear bolt (3) from right axle bracket (1) frame mounts (Fig. 7).

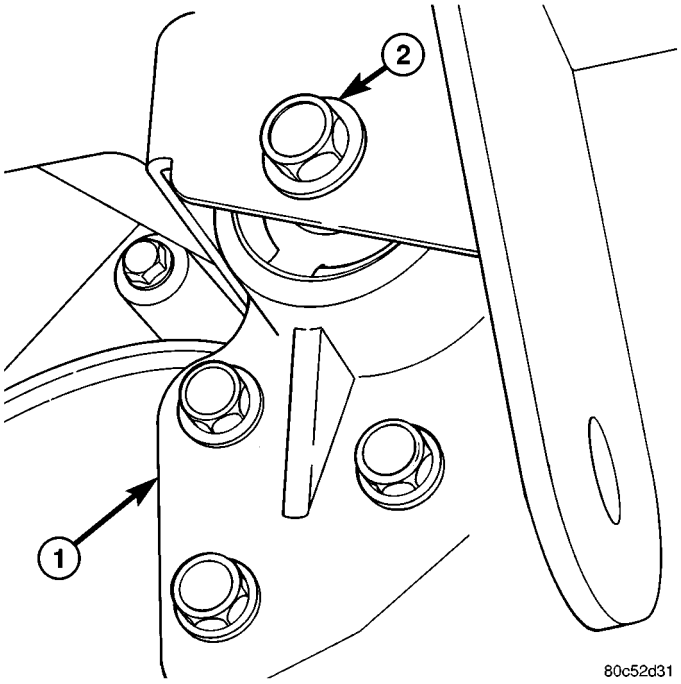

Fig. 8 LEFT REAR AXLE BRACKET

1 - LEFT REAR AXLE BRACKET
2 - BRACKET BOLT

FRONT AXLE - 186FIA (Continued)

(18) Remove bolt (2) from left rear axle bracket (1) frame mount (Fig. 8).

(19) Lower axle and from vehicle.

INSTALLATION

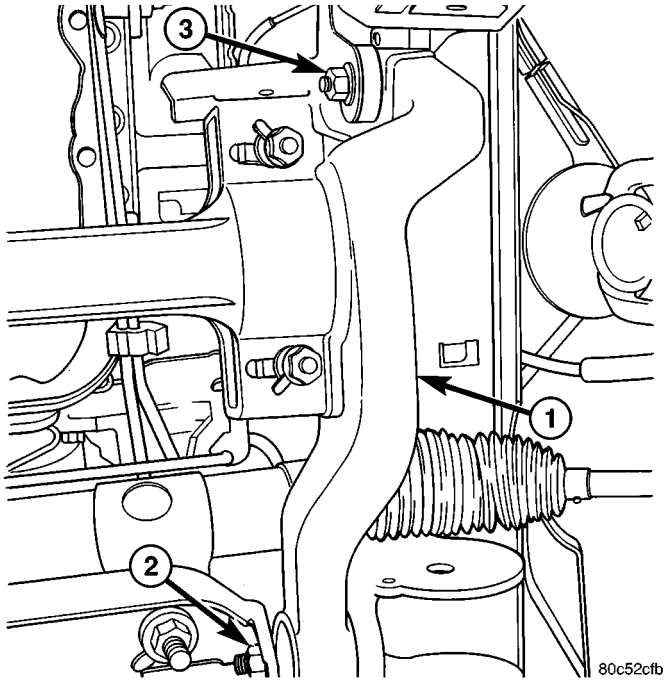

Fig. 9 RIGHT AXLE BRACKET

1 - RIGHT AXLE BRACKET
2 - FRONT BRACKET BOLT
3 - REAR BRACKET BOLT

NOTE: Separate right axle shaft from the half shaft if necessary and install axle shaft in the axle.

(1) Install right bracket (1) (Fig. 9) to axle and tighten to 88 N·m (65 ft. lbs.).

(2) Install left rear bracket (1) (Fig. 10) to axle and tighten to 61 N·m (45 ft. lbs.).

(3) Install left front bracket (1) (Fig. 11) to axle and tighten to 61 N·m (45 ft. lbs.).

(4) Raise axle up and align brackets with frame mounts.

(5) Install frame mount bolts and tighten to 88 N·m (65 ft. lbs.).

(6) Install half shafts.

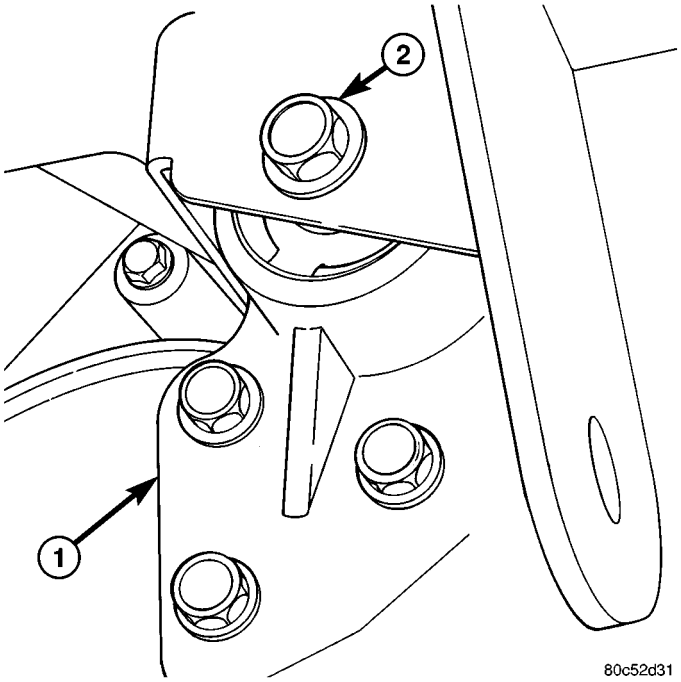

Fig. 10 LEFT AXLE BRACKET

1 - LEFT REAR AXLE BRACKET
2 - BRACKET BOLT

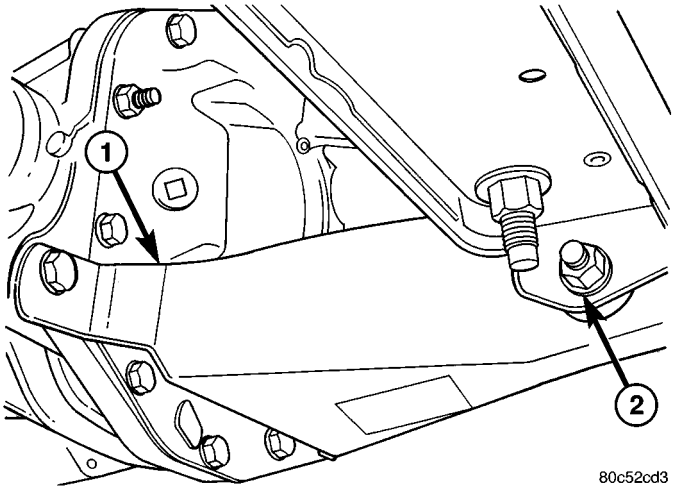

Fig. 11 FRONT AXLE BRACKET

1 - LEFT FRONT AXLE BRACKET
2 - CRADLE BRACKET BOLT

FRONT AXLE - 186FIA (Continued)

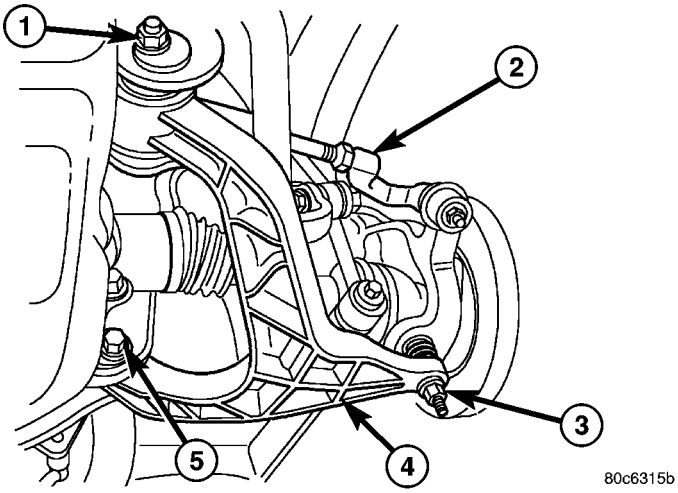

Fig. 12 LOWER CONTROL ARM

1 - FRONT CAM BOLT
2 - OUTER TIE ROD END
3 - LOWER BALL JOINT NUT
4 - LOWER CONTROL ARM
5 - REAR CAM BOLT

(7) Install right front control arm cam bolt (1) (Fig. 12) with marks aligned.

(8) Install lower ball joint into lower control arms (4) and tighten nuts (3).

(9) Align clevis with knuckles and install clevis bolts.

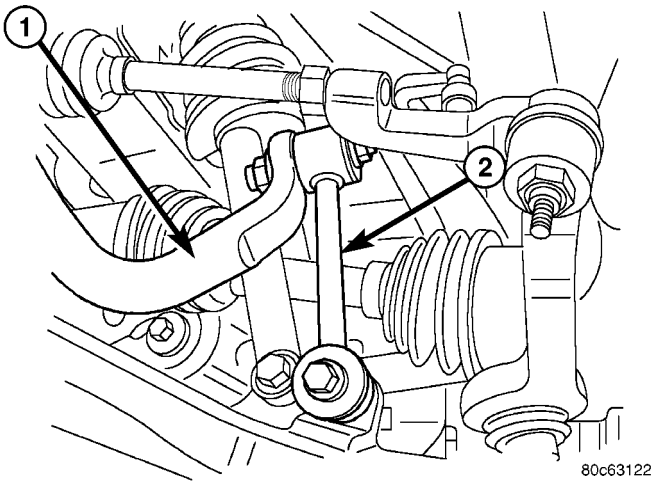

Fig. 13 STABILIZER BAR LINK

1 - STABILIZER BAR
2 - STABILIZER BAR LINK

(10) Install stabilizer bar (1) (Fig. 13) links (2) to lower control arms and install bolts.

(11) Install oil filter trough.

(12) Install new half shaft hub nuts and tighten to 136 N·m (100 ft. lbs.).

(13) Install propeller shaft.

(14) Install axle vent hose.

(15) Fill differential with gear lubricant.

(16) Install skid plate.

(17) Tighten clevis and stabilizer links bolts to specifications.

(18) Check vehicle alignment.

ADJUSTMENTS

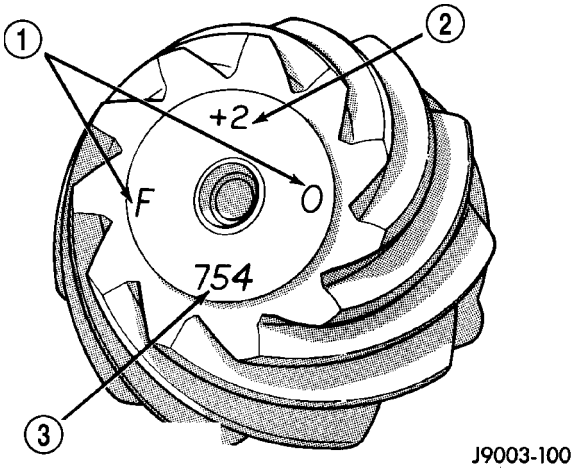

Fig. 14 PINION GEAR ID NUMBERS

1 - PRODUCTION NUMBERS
2 - DRIVE PINION GEAR DEPTH VARIANCE
3 - GEAR MATCHING NUMBER

Ring and pinion gears are supplied as matched sets. Gear match numbers (3) (Fig. 14) for the ring and pinion gear are etched onto each gear. A plus (+) number, minus (–) number or zero (0) is etched into the face of the pinion gear (2). This number is the amount (in thousandths of an inch) the depth varies from the standard depth setting of a pinion etched with a (0).

Compensation for pinion depth variance is achieved with a select shim/oil slinger. The shims are placed between the rear pinion bearing and the pinion gear head.

If installing a new gear, note the depth variance number of the original and replacement pinion. Add or subtract this number from the original depth shim/oil slinger to compensate for the difference in the depth variances. The numbers represent thousands of an inch deviation from the standard. If the number is negative, add that value to the required thickness of the depth shims. If the number is positive, subtract that value from the thickness of the depth shim.

Pinion Gear Depth Variance Chart: Note where Old and New Pinion Marking columns intersect. Intersecting figure represents plus or minus the amount needed.

FRONT AXLE - 186FIA (Continued)

PINION GEAR DEPTH VARIANCE

Original Pinion Gear Depth Variance	Replacement Pinion Gear Depth Variance								
	−4	−3	−2	−1	0	+1	+2	+3	+4
+4	+0.008	+0.007	+0.006	+0.005	+0.004	+0.003	+0.002	+0.001	0
+3	+0.007	+0.006	+0.005	+0.004	+0.003	+0.002	+0.001	0	−0.001
+2	+0.006	+0.005	+0.004	+0.003	+0.002	+0.001	0	−0.001	−0.002
+1	+0.005	+0.004	+0.003	+0.002	+0.001	0	−0.001	−0.002	−0.003
0	+0.004	+0.003	+0.002	+0.001	0	−0.001	−0.002	−0.003	−0.004
−1	+0.003	+0.002	+0.001	0	−0.001	−0.002	−0.003	−0.004	−0.005
−2	+0.002	+0.001	0	−0.001	−0.002	−0.003	−0.004	−0.005	−0.006
−3	+0.001	0	−0.001	−0.002	−0.003	−0.004	−0.005	−0.006	−0.007
−4	0	−0.001	−0.002	−0.003	−0.004	−0.005	−0.006	−0.007	−0.008

PINION DEPTH MEASUREMENT

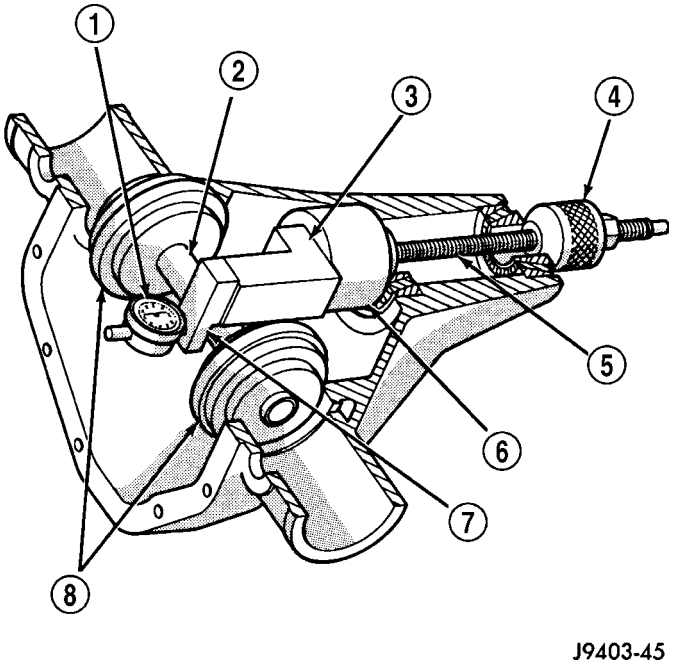

Fig. 15 PINION GEAR DEPTH TOOLS

1 - DIAL INDICATOR
2 - ARBOR
3 - PINION HEIGHT BLOCK
4 - CONE
5 - SCREW
6 - PINION BLOCK
7 - SCOOTER BLOCK
8 - ARBOR DISC

Measurements are taken with pinion bearing cups and pinion bearings installed in the housing. Take measurements with Pinion Gauge Set and Dial Indicator C-3339 (1) (Fig. 15).

(1) Assemble Pinion Height Block 6739 (3), Pinion Block 8804 (6) and rear pinion bearing onto Screw 6741(5).

(2) Insert height gauge components into the housing through pinion bearing cups.

(3) Install front pinion bearing and Cone-nut 6740 (4) onto the screw. Tighten Cone-Nut until Torque To Rotate screw is 1.7 N·m (15 in. lbs.).

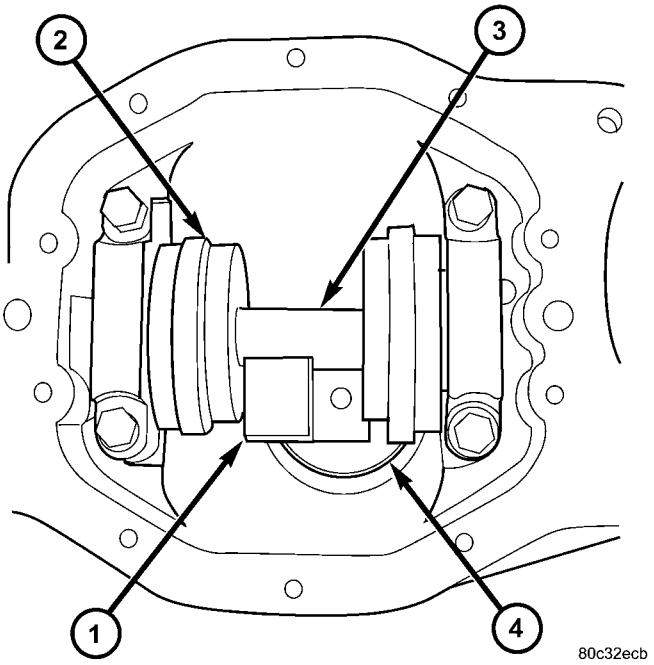

Fig. 16 DEPTH TOOLS IN HOUSING

1 - PINION HEIGHT BLOCK
2 - ARBOR DISC
3 - ARBOR
4 - PINION BLOCK

FRONT AXLE - 186FIA (Continued)

(4) Position Arbor Disc 6732 (2) (Fig. 16) and Arbor D-115-3 (3) into the housing bearing cradles. Install differential bearing caps on Arbor Discs and tighten bolts to 41 N·m (30 ft. lbs.).

NOTE: Arbor Discs 6732 has different step diameters to fit other axles. Choose proper step for axle being serviced.

(5) Assemble Dial Indicator C-3339 into Scooter Block D-115-2 and secure set screw.

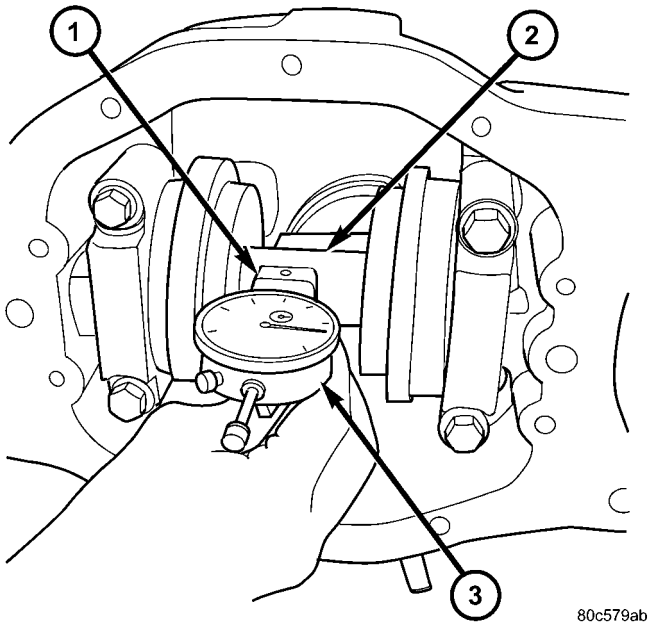

Fig. 17 PINION DEPTH MEASUREMENT

1 - SCOOTER BLOCK
2 - ARBOR
3 - DIAL INDICATOR

(6) Position Scooter Block (1) (Fig. 17) with Dial Indicator (3) flush on the pinion height block. Hold the scooter block and zero the dial indicator.

(7) Slowly slide the scooter block across the pinion height block over to the arbor (2). Move the scooter block till the dial indicator probe crests the arbor (2) and record the highest reading.

(8) Select a shim/oil slinger equal to the dial indicator reading plus the pinion depth variance number etched in the face of the pinion. For example, if the depth variance is –2, add +0.002 in. to the dial indicator reading.

DIFFERENTIAL SIDE BEARING PRELOAD AND GEAR BACKLASH

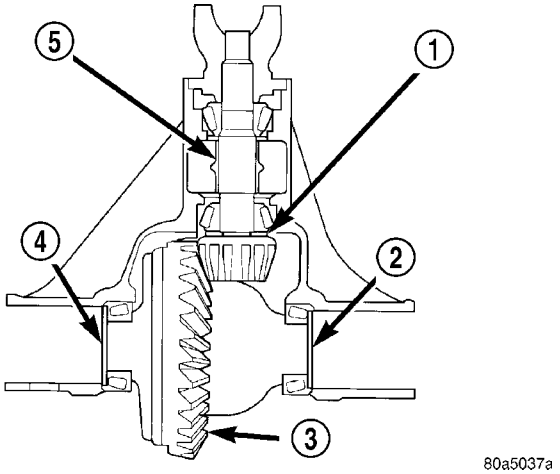

Fig. 18 SHIM LOCATIONS

1 - PINION GEAR DEPTH SHIM/OIL SLINGER
2 - DIFFERENTIAL BEARING SHIM
3 - RING GEAR
4 - DIFFERENTIAL BEARING SHIM
5 - COLLAPSIBLE SPACER

Differential bearing preload and gear backlash is achieved with selective shims (2) (4) (Fig. 18) located between the differential bearing cups and differential housing. The proper shim thickness can be determined using slip-fit Dummy Bearings D-348 in place of the differential side bearings and a Dial Indicator C-3339. Before measuring differential bearing preload and gear backlash, measure pinion gear depth and prepare pinion for installation. Pinion gear depth is essential to establishing gear backlash and tooth contact patterns. After measuring shim thickness to take up differential side play, install pinion and measure gear backlash shim thickness. Overall shim thickness is the dial indicator reading and preload specification added together. The gear backlash measurement determines the shim thickness used on the ring gear side of the differential case. Subtract gear backlash shim thickness from overall shim thickness to determine shim thickness for pinion gear side of the differential. Differential shim measurements are performed with spreader W-129-B removed.

FRONT AXLE - 186FIA (Continued)

PRELOAD SHIM SELECTION

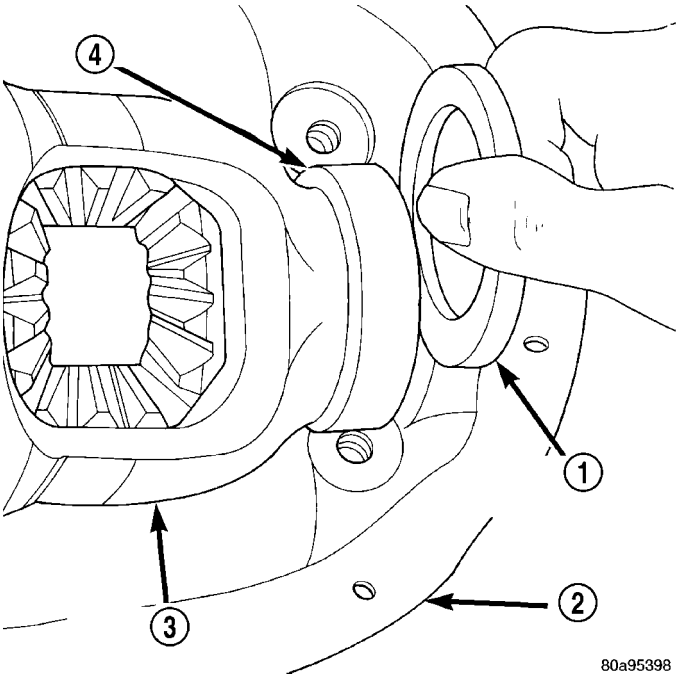

Fig. 19 DUMMY SHIMS

1 - DUMMY SHIM
2 - DIFFERENTIAL HOUSING
3 - DIFFERENTIAL CASE
4 - DUMMY BEARINGS

NOTE: It is difficult to salvage the differential side bearings during the removal procedure. Install replacement bearings if necessary.

(1) Remove differential side bearings from differential case.

(2) Install ring gear on differential case and tighten bolts to specification.

(3) Install Dummy Bearings D-348 (4) (Fig. 19) on differential case (3).

(4) Install differential case in the housing.

(5) Record the thickness of Dummy Shims 8107 (1). Insert the shims between the dummy bearings and the differential housing (2).

(6) Install the bearing caps (1) (Fig. 20) in their correct positions and snug the bolts (3).

(7) With a dead-blow hammer (1) (Fig. 21), seat the differential dummy bearings to pinion side of the housing (2).

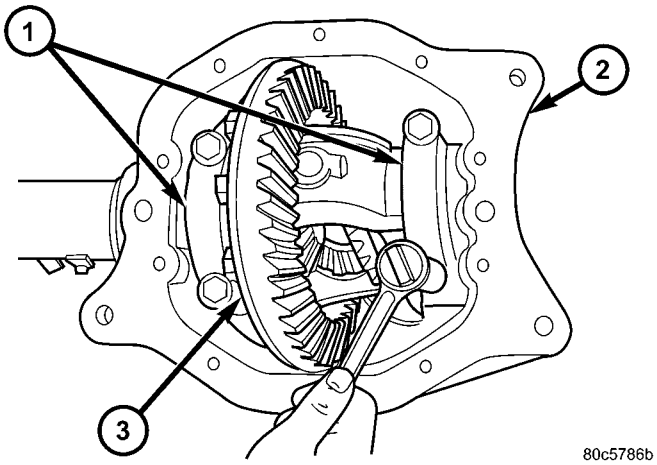

Fig. 20 BEARING CAP BOLTS

1 - BEARING CAPS
2 - HOUSING
3 - BOLTS

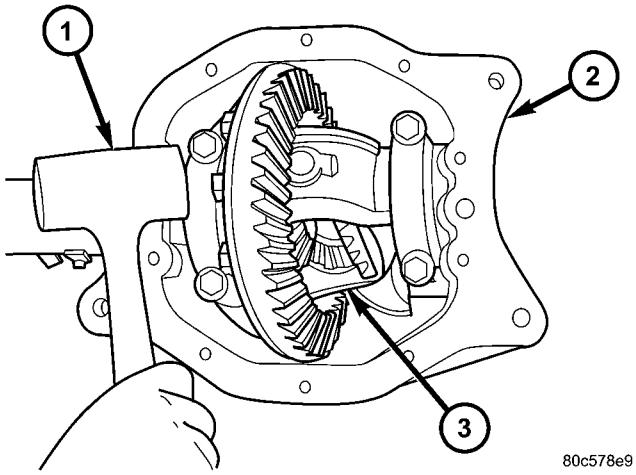

Fig. 21 SEAT DUMMY BEARINGS PINION SIDE

1 - HAMMER
2 - DIFFERENTIAL HOUSING
3 - DIFFERENTIAL

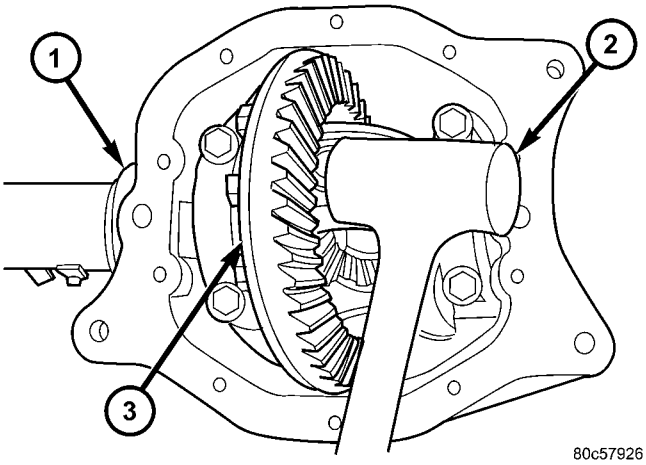

Fig. 22 SEAT DUMMY BEARING RING GEAR SIDE

1 - DIFFERENTAIL HOUSING
2 - HAMMER
3 - RING GEAR

FRONT AXLE - 186FIA (Continued)

(8) With a dead-blow hammer (2) (Fig. 22), seat the differential dummy bearings to the ring gear (3) side of the housing (1).

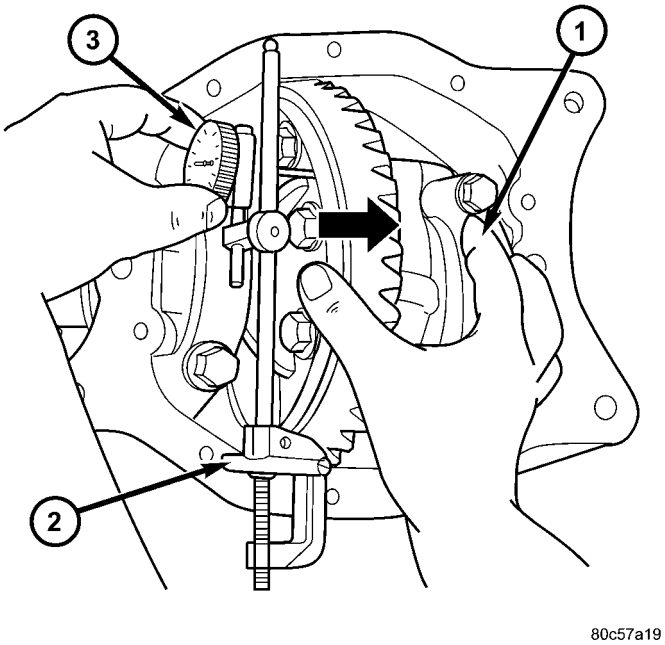

Fig. 23 DIFFERENTIAL PINION GEAR SIDE

1 - PINION SIDE
2 - PILOT STUD
3 - DIAL INDICATOR

(9) Thread Pilot Stud C-3288-B (2) (Fig. 23) into rear cover bolt hole below ring gear.

(10) Attach a Dial Indicator C-3339 (3) to the Pilot Stud. Position the dial indicator plunger on flat surface between the ring gear bolts.

(11) Push and hold differential case to pinion gear side (1) of the housing and zero dial indicator.

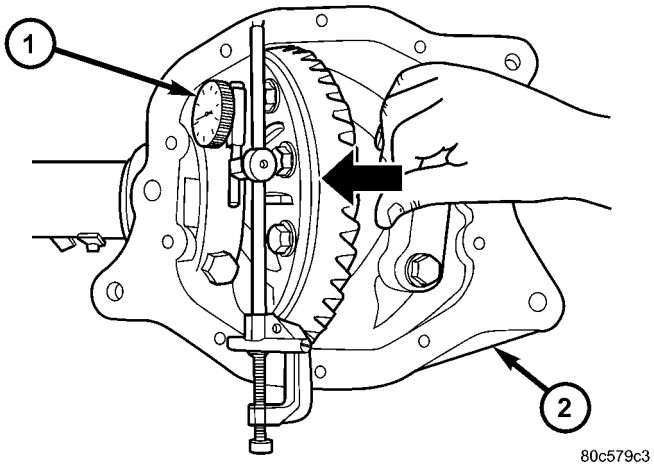

Fig. 24 DIFFERENTIAL RING GEAR SIDE

1 - DIAL INDICATOR
2 - DIFFERENTIAL HOUSING

(12) Push and hold differential case to ring gear side of the housing (2) (Fig. 24) and record dial indicator (1) reading.

(13) Add 0.152 mm (0.006 in.) to the zero end play total. This new total represents the thickness of shims to compress or preload the new bearings when the differential is installed.

(14) Rotate dial indicator out of the way on the pilot stud.

(15) Remove differential case and dummy bearings from the housing.

(16) Install the pinion gear in the housing. Install the pinion yoke and establish the correct pinion rotating torque.

(17) Install differential case and Dummy Bearings D-348 in the housing.

(18) Install a single dummy shim in the ring gear side. Install bearing caps and tighten bolts snug.

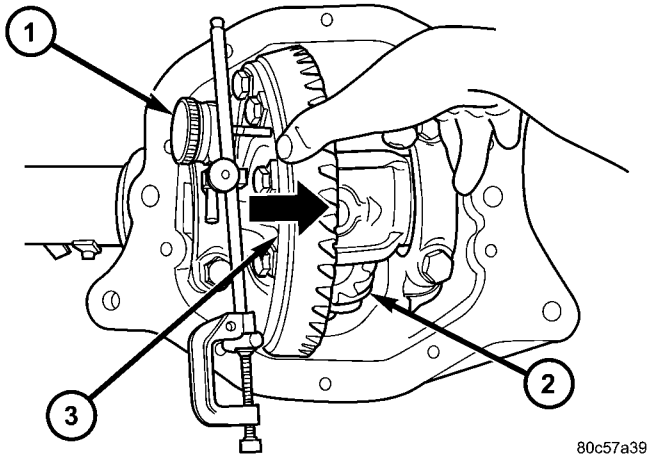

Fig. 25 DIFFERENTIAL PINION GEAR SIDE

1 - DIAL INDICATOR
2 - PINION GEAR
3 - RING GEAR

(19) Seat ring gear side dummy bearing.

(20) Position the dial indicator (1) (Fig. 25) plunger on a flat surface between the ring gear (3) bolt heads.

(21) Push and hold differential case toward pinion gear (2) and zero dial indicator.

(22) Push and hold differential case to ring gear side (3) (Fig. 26) of the housing and record dial indicator (1) reading. Add dummy shim thickness to this reading. This will be the total shim thickness to achieve zero backlash.

(23) Subtract 0.076 mm (0.003 in.) from the dial indicator reading to compensate for backlash between ring and pinion gears. This total is the thickness shim required to achieve proper backlash.

(24) Subtract the backlash shim thickness from the total preload shim thickness. The remainder is

FRONT AXLE - 186FIA (Continued)

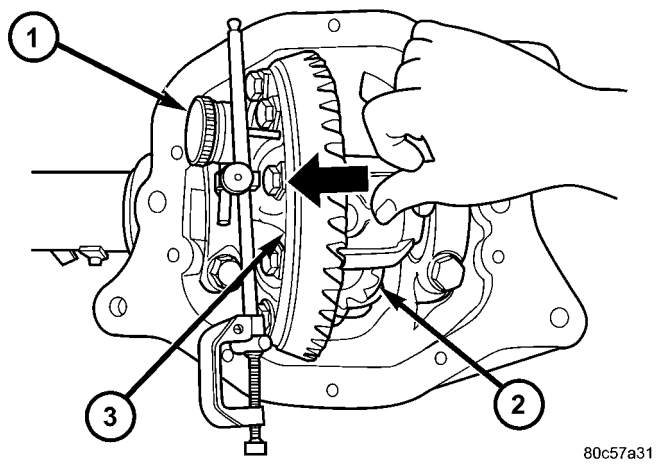

Fig. 26 DIFFERENTIAL RING GEAR SIDE

1 - DIAL INDICATOR
2 - PINION GEAR
3 - RING GEAR

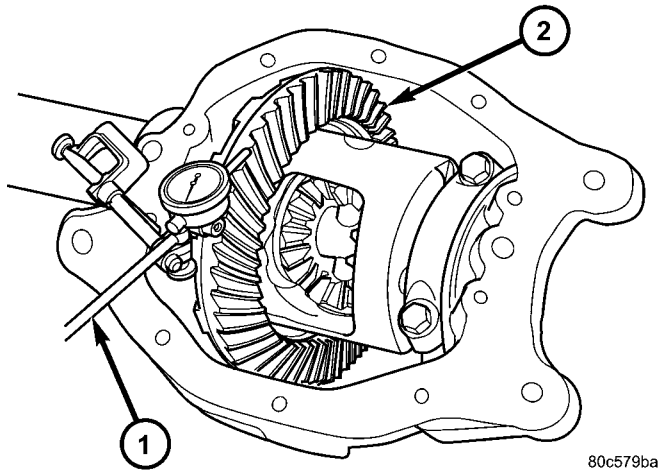

Fig. 27 RING GEAR BACKLASH

1 - DIAL INDICATOR
2 - RING GEAR

the shim thickness required on the pinion side of the axle housing.

(25) Rotate dial indicator out of the way on pilot stud.

(26) Remove differential case and dummy bearings from the housing.

(27) Install side bearings and cups on differential case.

(28) Install spreader W-129-B with Adapter Set 6987 on the housing and spread axle opening enough to receive differential case.

CAUTION: Never spread the differential housing over 0.34 mm (0.013 in.). If the housing is overspread, it could be distorted or damaged.

(29) Place the bearing preload shims in the axle housing, against the axle tubes.

(30) Install differential case into the housing.

(31) Remove spreader from the housing.

GEAR BACKLASH

(1) Rotate the differential case several times to seat the side bearings.

(2) Position the indicator plunger (1) (Fig. 27) against a ring gear tooth (2).

(3) Push and hold ring gear upward while not allowing the pinion gear to rotate.

(4) Zero dial indicator face to pointer.

(5) Push and hold ring gear downward while not allowing the pinion gear to rotate. Dial indicator reading should be between 0.12 mm (0.005 in.) and 0.20 mm (0.008 in.). If backlash is not within specifications transfer the necessary amount of shim thickness from one side of the housing to the other.

(6) Verify differential case and ring gear runout by measuring ring to pinion gear backlash at eight locations around the ring gear. Readings should not vary more than 0.05 mm (0.002 in.). If readings vary more than specified, the ring gear or the differential case is defective.

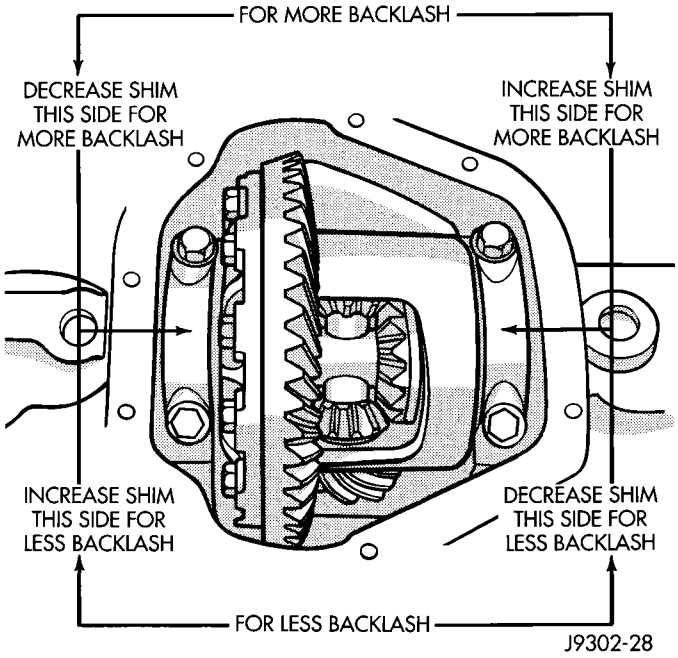

Fig. 28 BACKLASH SHIMS

After the proper backlash (Fig. 28) is achieved, perform Gear Contact Pattern Analysis procedure.

FRONT AXLE - 186FIA (Continued)

GEAR CONTACT PATTERN

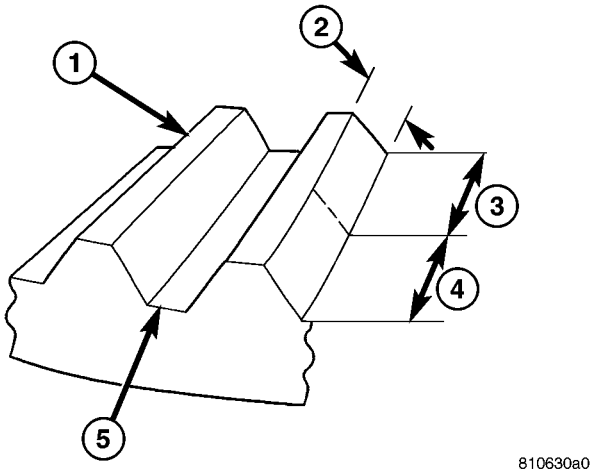

Fig. 29 GEAR DESCRIPTION

1 - TOP LAND
2 - PROFILE
3 - TOE
4 - HEEL
5 - ROOT

The ring gear and pinion teeth contact patterns will show if the pinion depth is correct in the housing. It will also show if the ring gear backlash has been adjusted correctly. The backlash can be adjusted within specifications to achieve desired tooth contact patterns.

The TOP LAND (1) (Fig. 29) of the gear tooth is the top surface of the tooth. The PROFILE (2) of the gear tooth is the depth of the tooth. The TOE (3) of the gear is the portion of the tooth surface at the end towards the center. The HEEL (4) of the gear is the portion of the tooth at the outer-end. The ROOT (5) of the gear tooth is the lowest portion of the tooth.

NOTE: If the PROFILE across the tooth is the same it is a 3 Axis cut gear. If the PROFILE across the tooth is tapered it is a 2 Axis cut gear.

(1) Apply a thin coat of hydrated ferric oxide or equivalent to the drive and coast side of the ring gear teeth.

(2) Wrap, twist and hold a shop towel around the pinion yoke to increase the turning resistance of the pinion. This will provide a more distinct contact pattern.

(3) With a boxed end wrench on a ring gear bolt, rotate the differential case one complete revolution in both directions while a load is being applied from shop towel.

The areas on the ring gear teeth with the greatest degree of contact against the pinion teeth will squeegee the compound to the areas with the least amount of contact. Note and compare patterns on the ring gear teeth to Gear Tooth Contact Patterns chart (Fig. 30) and adjust pinion depth and gear backlash as necessary.

DIFFERENTIAL BEARING PRELOAD CHECK

The final check on the differential assembly before installing the axles, is torque to rotate pinion (1) (Fig. 31) and differential combined with an inch pound torque wrench (2). This will verify the correct differential bearing preload.

Torque to rotate the differential and pinion is the torque to rotate the pinion plus:

- Gear Ratio 3.55 - 0.48-0.78 N·m (4.2-6.9 in. lbs.)
- Gear Ratio 3.73 - 0.45-0.75 N·m (3.9-6.6 in. lbs.)
- Gear Ratio 4.10 - 0.41-0.69 N·m (3.6-6.0 in. lbs.)

SPECIFICATIONS

AXLE SPECIFICATIONS

DESCRIPTION	SPECIFICATION
Axle Ratio	3.55, 3.73, 4.10
Ring Gear Diameter	186 mm (7.33 in.)
Ring Gear Backlash	0.12-0.20 mm (0.005-0.008 in.)
Pinion Bearing Preload	1.69-2.82 N·m (15-25 in. lbs.)
Differential Bearing Preload Added To Pinion Torque To Rotate	
Gear Ratio 3.55	0.48-0.78 N·m (4.2-6.9 in. lbs.)
Gear Ratio 3.73	0.45-0.75 N·m (3.9-6.6 in. lbs.)
Gear Ratio 4.10	0.41-0.69 N·m (3.6-6.0 in. lbs.)

FRONT AXLE - 186FIA (Continued)

DRIVE SIDE HEEL TOE	CONDITION	COAST SIDE TOE HEEL	CONDITION	ACTION REQUIRED
	Desirable pattern. The drive pattern should be centered on the tooth. There should be some clearance between the pattern and the top of the tooth.		**Desirable pattern.** The coast pattern should be centered on the tooth, but may be slightly toward the toe. There should be some clearance between the pattern and the top of the tooth.	None
	Top heel contact		**Top toe contact**	Backlash correct. Thicker pinion position shim required.
	Root toe contact		**Root heel contact**	Backlash correct. Thinner pinion position shim required.
	Top heel contact		**Top heel contact**	Pinion position shim correct. Decrease backlash.
	Root toe contact		**Root toe contact**	Pinion position shim correct. Increase backlash.

8106312d

Fig. 30 PATTERN INTERPRETATION (GEAR CUT 2 AXIS)

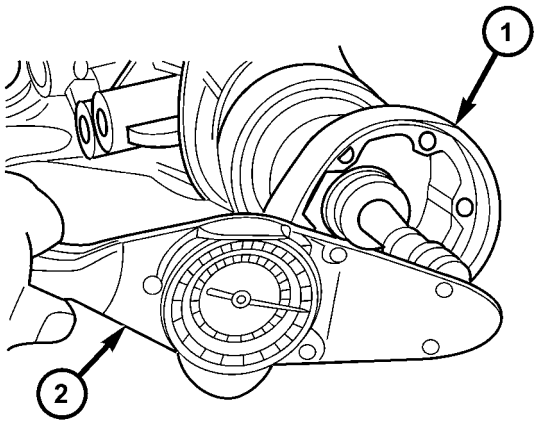

80c2cde4

Fig. 31 PINION ROTATING TORQUE

1 - PINION COMPANION FLANGE
2 - TORQUE WRENCH

FRONT AXLE - 186FIA (Continued)

TORQUE SPECIFICATIONS

DESCRIPTION	N·m	Ft. Lbs.	In. Lbs.
Ring Gear Bolts	95-122	70-90	-
Differential Bearing Cap Bolts	54-67	39-50	-
Differential Cover Bolts	19-26	14-19	-
Pinion Nut	217-352	160-260	-
Left Axle Bracket Bolts	61	45	-
Front Axle Bracket Bolts	61	45	-
Right Axle Bracket Bolts	88	65	-
Axle Brackets To Frame Bolts	88	65	-

SPECIAL TOOLS

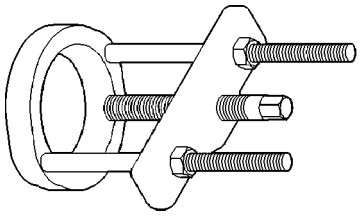

PULLER C-293-PA

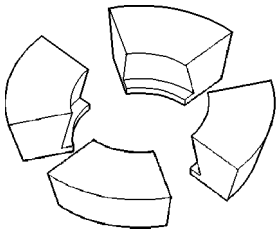

ADAPTER C-293-39

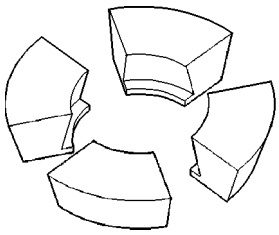

ADAPTER C-293-42

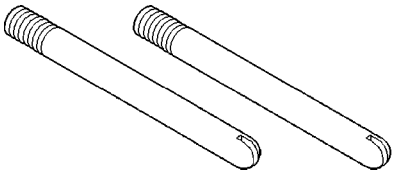

PILOT STUD C-3288-B

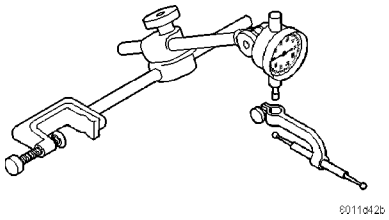

DIAL INDICATOR C-3339

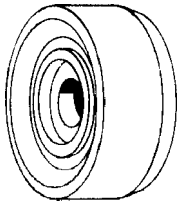

INSTALLER C-3716-A

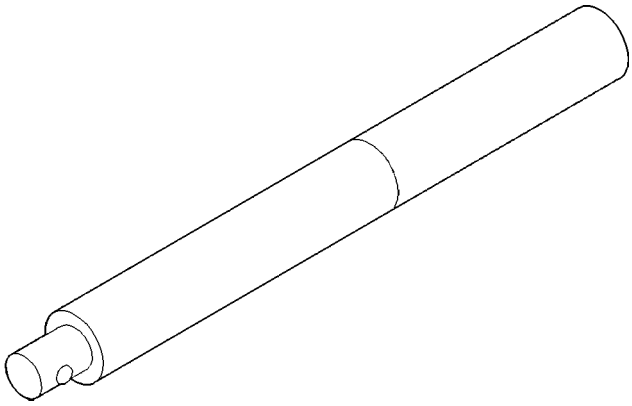

HANDLE C-4171

FRONT AXLE - 186FIA (Continued)

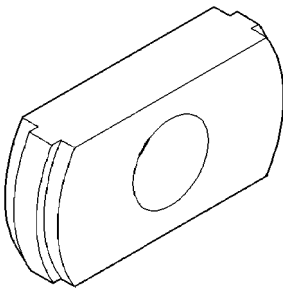

REMOVER C-4307

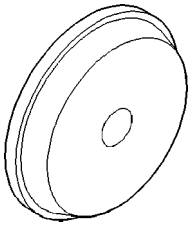

INSTALLER C-4308

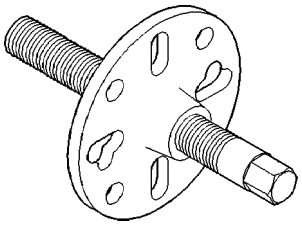

PULLER C-452

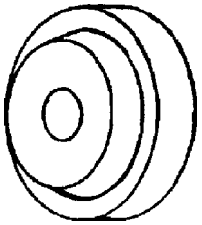

INSTALLER D-146

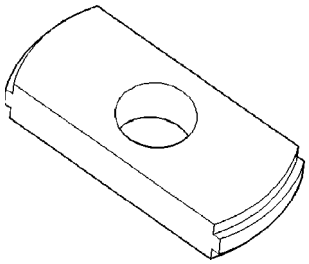

REMOVER D-149

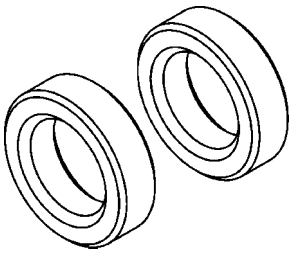

DUMMY BEARINGS D-348

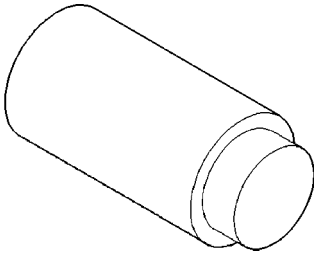

PLUG SP-3289

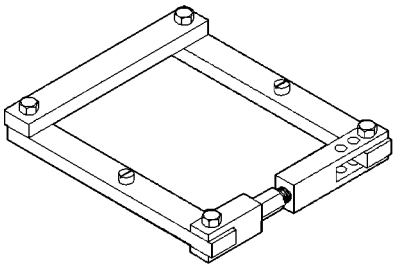

SPREADER W-129-B

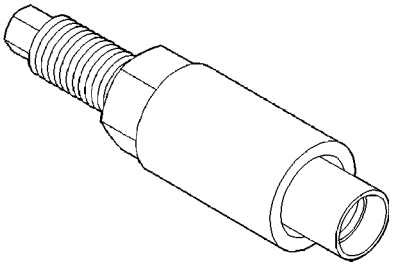

INSTALLER W-162-D

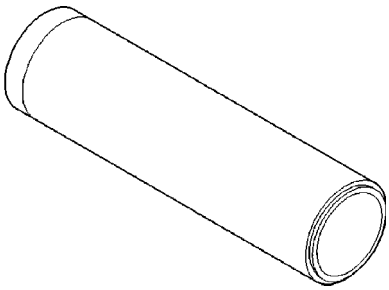

INSTALLER 6448

FRONT AXLE - 186FIA (Continued)

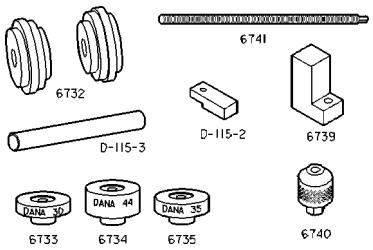

PINION DEPTH SET 6774

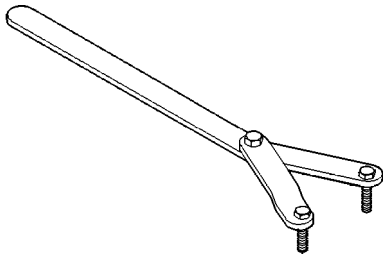

SPANNER WRENCH 6958

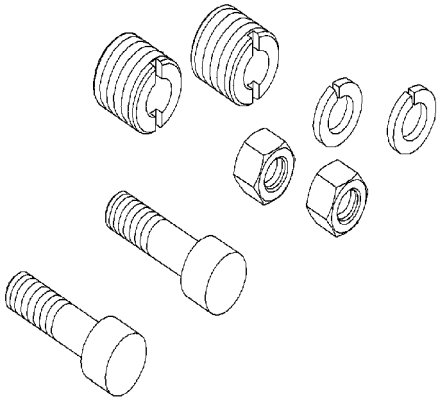

ADAPTER KIT 6987B

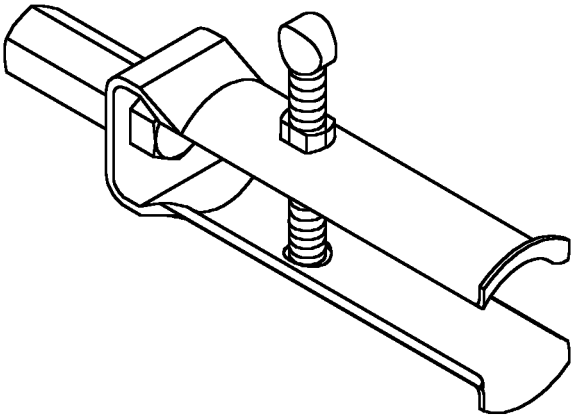

REMOVER 7794-A

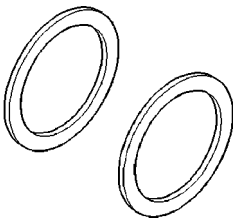

DUMMY SHIMS 8107

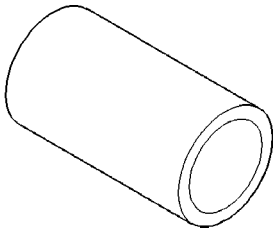

CUP 8109

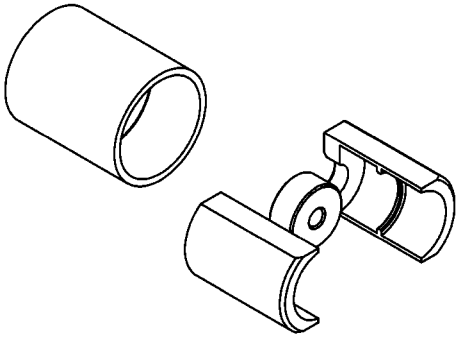

REMOVER 8420A

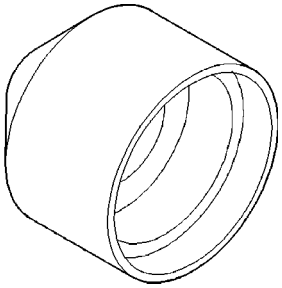

INSTALLER 8681

FRONT AXLE - 186FIA (Continued)

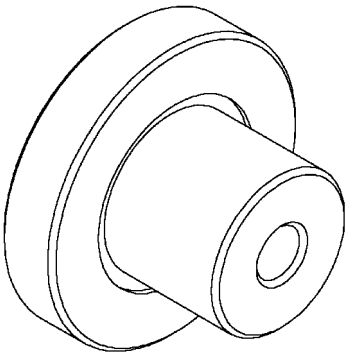

PINION BLOCK 8804

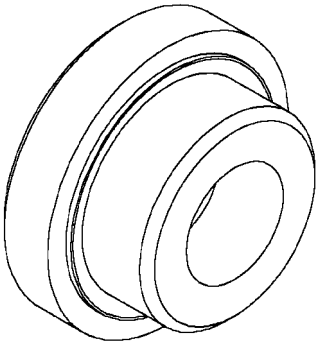

INSTALLER 8805

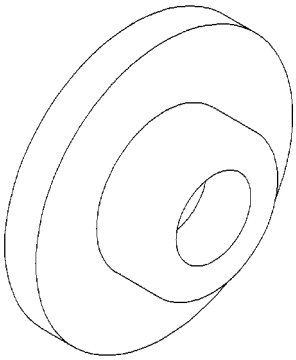

INSTALLER 8806

COVER-DIFFERENTIAL

REMOVAL

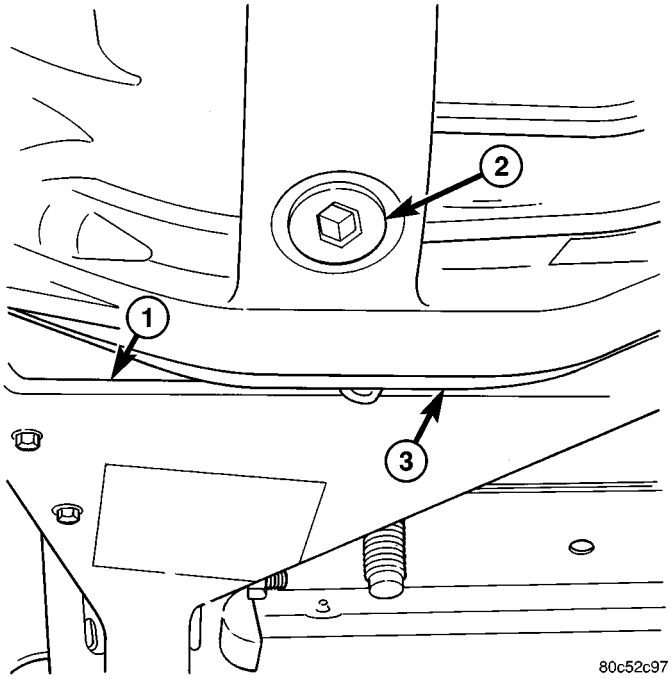

Fig. 32 DRAIN PLUG

1 - LEFT FRONT AXLE BRACKET
2 - DRAIN PLUG
3 - DIFFERENTIAL HOUSING

(1) With vehicle in neutral, position vehicle on hoist.

(2) Remove skid plate.

(3) Remove drain plug (2) (Fig. 32) from housing (3) and drain fluid.

(4) Remove oil trough (1) (Fig. 33) bolt from axle bracket.

(5) Remove oil trough nut (2) from differential cover.

(6) Loosen left front axle bracket bolt (2) (Fig. 34) at cradle.

(7) Remove left front axle bracket (1) bolts from the axle and let bracket hang forward of the axle.

(8) Remove vent hose from cover and remove oil trough.

(9) Remove differential cover bolts and remove cover.

INSTALLATION

(1) Clean cover and mating surface.

(2) Apply a bead of Mopar Axle RTV sealant (1) (Fig. 35) or equivalent to the differential cover (2).

COVER-DIFFERENTIAL (Continued)

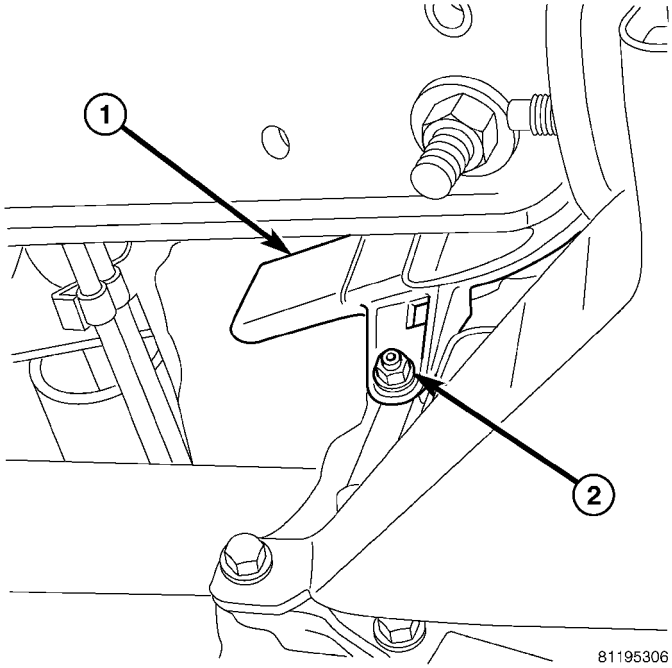

Fig. 33 DRAIN TROUGH

1 - TROUGH
2 - MOUNTING NUT

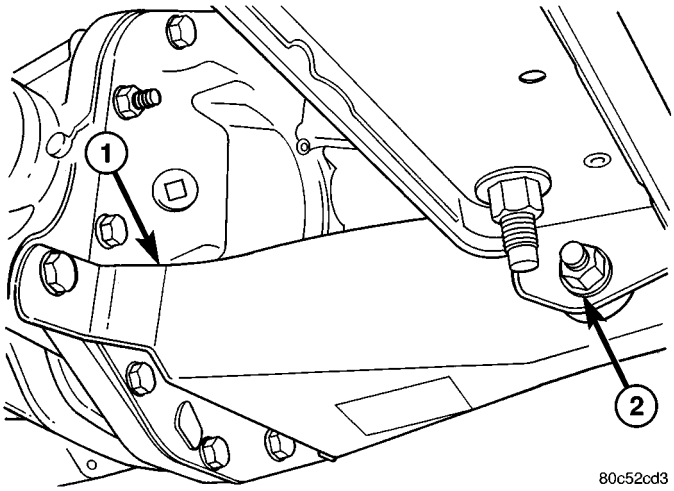

Fig. 34 LEFT FRONT AXLE BRACKET

1 - LEFT FRONT AXLE BRACKET
2 - CRADLE BRACKET BOLT

CAUTION: If cover is not installed within 3 to 5 minutes, the cover must be cleaned and new RTV applied. Failure to follow these instructions will result in a leak.

(3) Install differential housing cover (1) (Fig. 36) and tighten bolts in a criss-cross pattern to 19-26 N·m (14-19 ft. lbs.).

(4) Install drain trough and tighten nut to 23 N·m (200 in. lbs.).

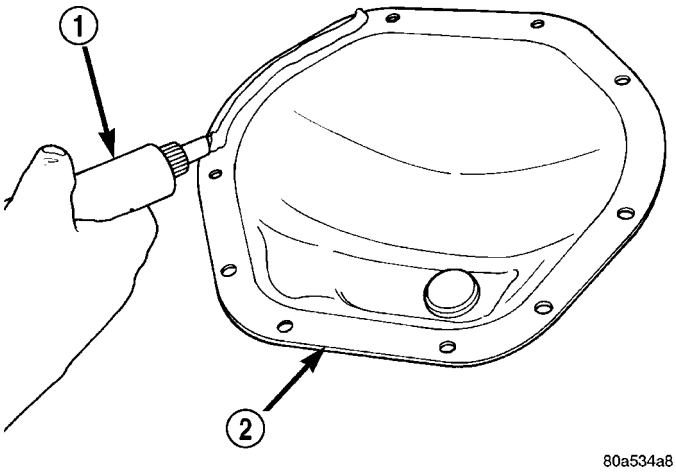

Fig. 35 APPLY SEALANT

1 - SEALANT
2 - DIFFERNTIAL COVER

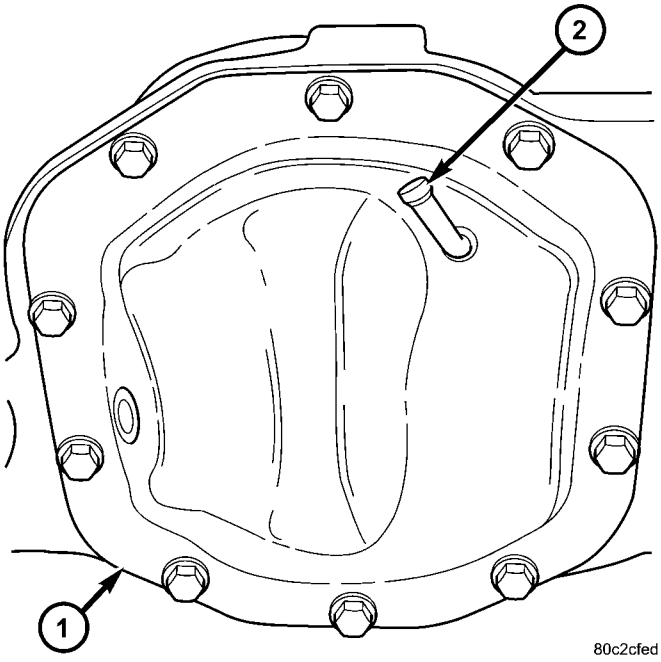

Fig. 36 DIFFERENTIAL COVER

1 - COVER
2 - VENT TUBE

(5) Install vent hose (2) on differential cover with new clamp.

(6) Install axle bracket to axle and tighten to 61 N·m (45 ft. lbs.).

(7) Install drain trough bolt to axle bracket and tighten to 12 N·m (110 in. lbs.).

(8) Tighten left front axle bracket cradle nut to 61 N·m (45 ft. lbs.).

(9) Install skid plate.

SHAFT-AXLE

REMOVAL

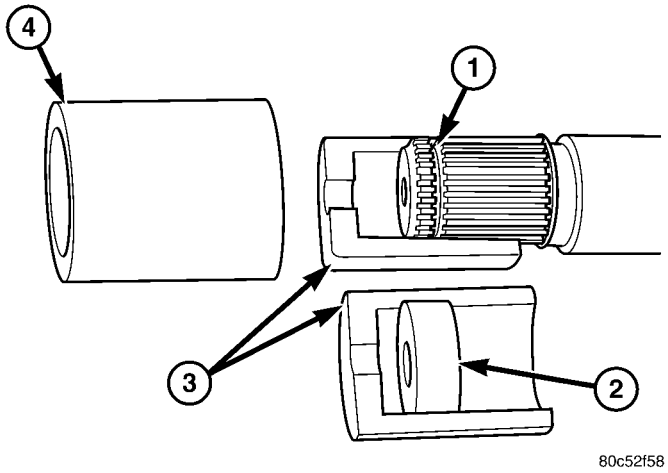

Fig. 37 AXLE SHAFT PULLER

1 - SNAP RING GROVE
2 - SLID HAMMER THREADS
3 - REMOVER BLOCKS
4 - REMOVER COLLAR

(1) With vehicle in neutral, position vehicle on hoist.
(2) Remove right half shaft from vehicle.
(3) Remove snap ring and o-ring from axle shaft.
(4) Assemble Remover 8420A blocks (3) (Fig. 37) with hammer threads (2) on snap ring groove (1) on the shaft. Slide collar (4) over blocks and thread slid hammer into remover and remove shaft.
(5) Slide axle shaft out of the axle tube.

INSTALLATION

(1) Lubricate bearing (1) (Fig. 38) bore and seal (2) lip with gear lubricant. Insert axle shaft through seal, bearing and engage it into side gear splines.

NOTE: Use care to prevent shaft splines from damaging axle shaft seal.

(2) Install half shaft snap-ring and o-ring.
(3) Push the axle shaft until the axle shaft snap-ring passes through the side gear.
(4) Install right half shaft.
(5) Check differential fluid level.

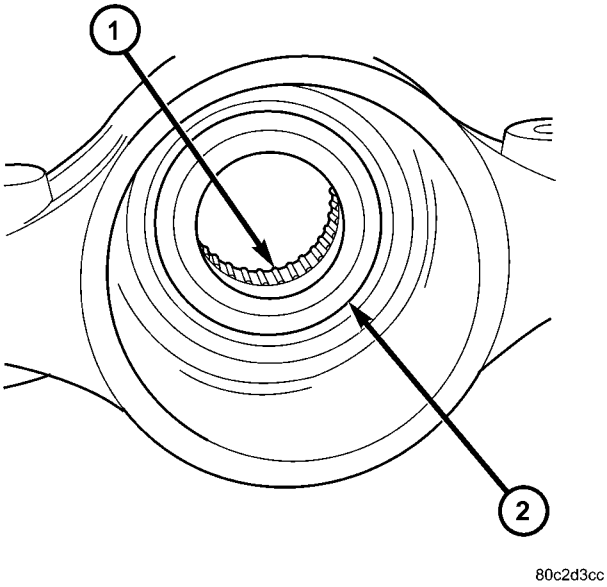

Fig. 38 AXLE SHAFT SEAL

1 - BEARING
2 - SEAL

SEAL-AXLE SHAFT

REMOVAL

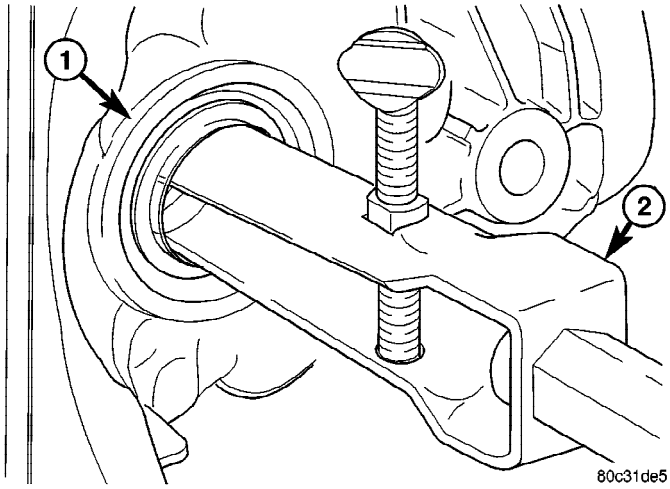

Fig. 39 SHAFT SEAL REMOVER

1 - SHAFT SEAL
2 - REMOVER

(1) Remove half shaft.
(2) Remove axle shaft for right side seal removal.
(3) Remove shaft seal (1) (Fig. 39) with Remover 7794-A (2) and a slide hammer.

SEAL-AXLE SHAFT (Continued)

INSTALLATION

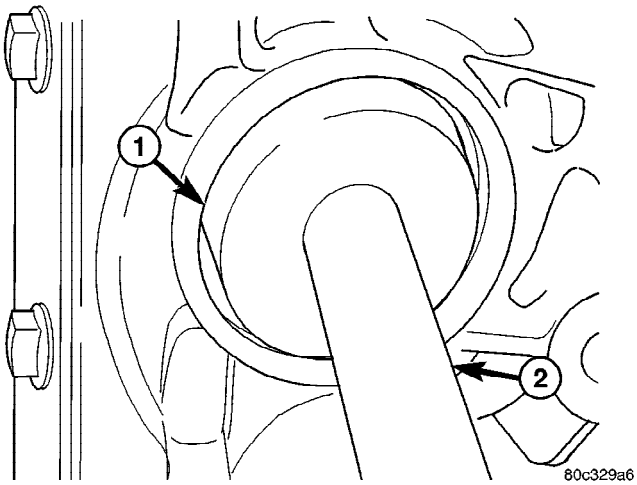

Fig. 40 SEAL INSTALLER

1 - INSTALLER 8806
2 - HANDLE C-4171

(1) Apply a light coat of lubricant on the lip of the shaft seal.

(2) Install **new** shaft seal with Installer 8806 (2) (Fig. 40) and Handle C-4171(1).

(3) Install right axle shaft if removed.

(4) Install half shaft.

BEARING-AXLE

REMOVAL

(1) Remove half shaft.

(2) Remove axle shaft for right side seal removal.

(3) Remove shaft seal with Remover 7794-A and a slide hammer.

(4) Remove shaft bearing (1) (Fig. 41) with Remover 7794-A (2) and a slide hammer.

INSTALLATION

(1) Install **new** shaft bearing with Installer 8805 and Handle C-4171.

(2) Apply a light coat of lubricant on the lip of the shaft seal.

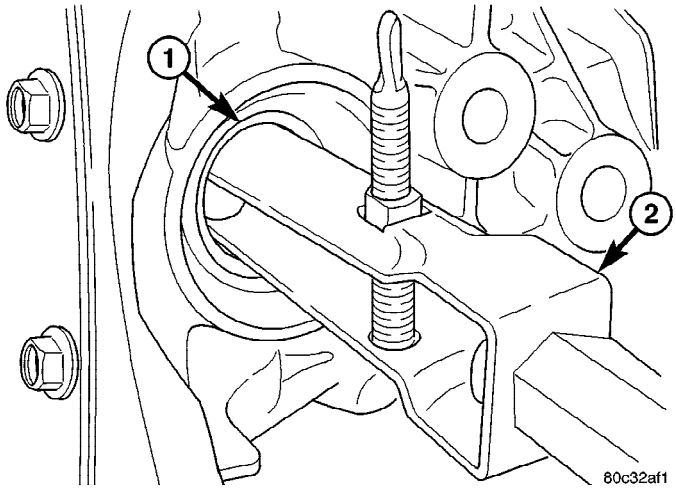

Fig. 41 SHAFT BEARING REMOVER

1 - SHAFT BEARING
2 - REMOVER

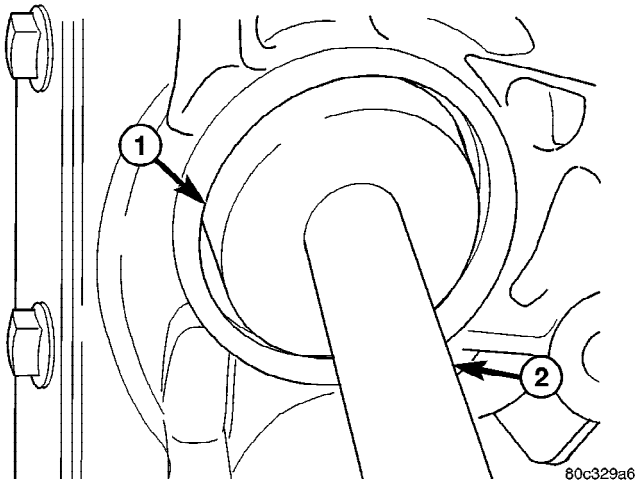

Fig. 42 SEAL INSTALLER

1 - INSTALLER 8806
2 - HANDLE C-4171

(3) Install **new** shaft seal with Installer 8806 (1) (Fig. 42) and Handle C-4171 (2).

(4) Install right axle shaft if removed.

(5) Install half shaft.

SEAL-PINION

REMOVAL

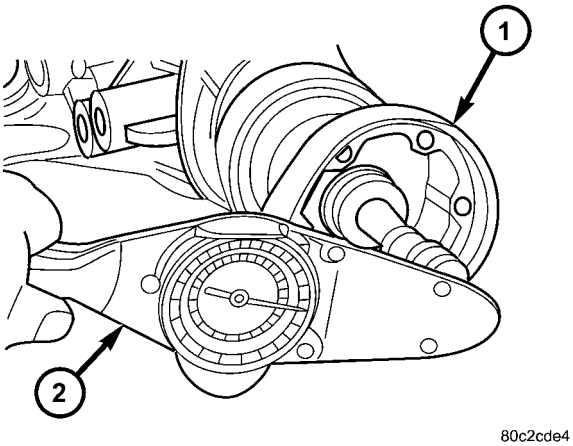

Fig. 43 PINION ROTATING TORQUE

1 - PINION COMPANION FLANGE
2 - TORQUE WRENCH

(1) With vehicle in neutral, position vehicle on hoist.

(2) Remove brake calipers and rotors.

(3) Remove propeller shaft.

(4) Rotate pinion gear a minimum of ten times and verify the pinion rotates smoothly.

(5) Record torque to rotate the pinion gear (1) (Fig. 43) with a inch pound torque wrench (2).

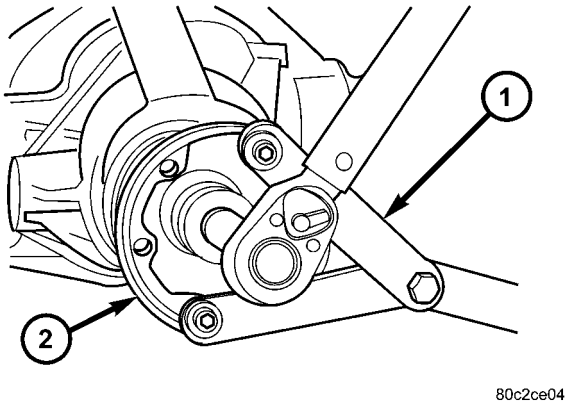

Fig. 44 PINION FLANGE NUT

1 - SPANNER WRENCH
2 - PINION COMPANION FLANGE

(6) Using a short piece of pipe and Spanner Wrench 6958 (1) (Fig. 44) to hold the pinion companion flange (2) and remove the pinion nut.

(7) Remove pinion companion flange with Remover C-452 (2) (Fig. 45) and Spanner Wrench 6958 (1).

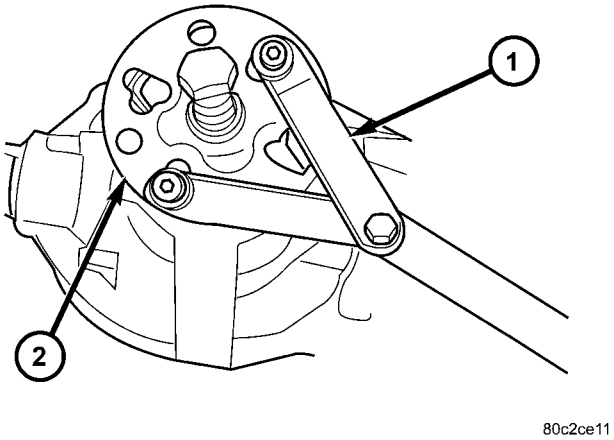

Fig. 45 PINION FLANGE REMOVER

1 - SPANNER WRENCH
2 - REMOVER

(8) Pry pinion seal out with a seal pick.

INSTALLATION

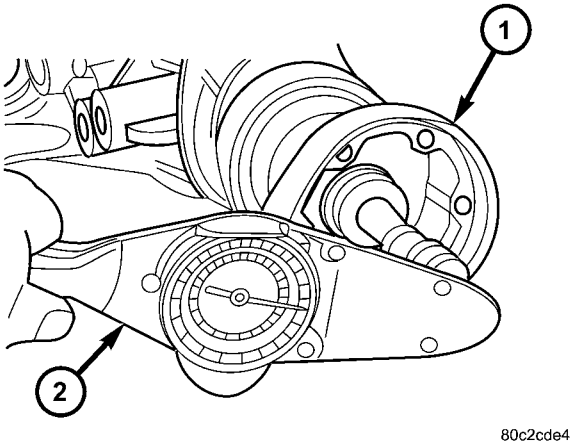

Fig. 46 PINION ROTATING TORQUE

1 - PINION COMPANION FLANGE
2 - TORQUE WRENCH

(1) Apply a light coating of gear lubricant on the lip of pinion seal. Install seal with Installer 8681.

(2) Install pinion companion flange on the pinion gear with Installer W-162-D, Cup 8109 and Wrench 6958.

CAUTION: Do not exceed the minimum tightening torque 216 N·m (160 ft. lbs.) while installing pinion nut at this point. Failure to follow these instructions will result in damage.

(3) Install a **new** nut on the pinion gear. **Tighten the nut only enough to remove the shaft end play.**

SEAL-PINION (Continued)

CAUTION: Never loosen pinion nut to decrease pinion rotating torque and never exceed specified preload torque. Failure to follow these instructions will result in damage.

(4) Rotate pinion a minimum of ten time and verify pinion rotates smoothly. Rotate the pinion shaft (1) (Fig. 46) with an inch pound torque wrench (2). Rotating torque should be equal to the reading recorded during removal plus 0.56 N·m (5 in. lbs.).

(5) If rotating torque is low, use Spanner Wrench 6958 to hold the pinion companion flange and tighten the pinion nut in 6.8 N·m (5 ft. lbs.) increments until proper rotating torque is achieved.

CAUTION: If maximum tightening torque is reached prior to reaching the required rotating torque, the collapsible spacer may have been damaged. Failure to follow these instructions will result in damage.

(6) Install propeller shaft.
(7) Fill differential with gear lubricant.

DIFFERENTIAL

REMOVAL

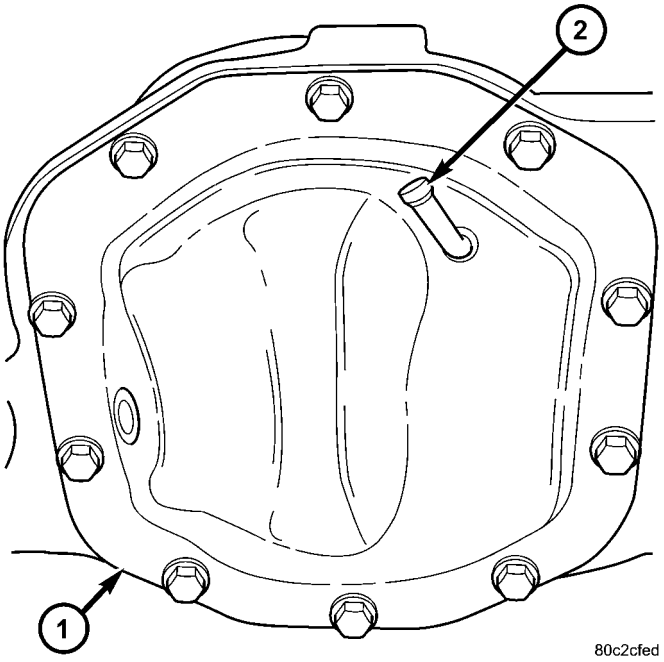

Fig. 47 DIFFERENTIAL COVER

1 - COVER
2 - VENT TUBE

(1) Remove differential housing cover (1) (Fig. 47).

(2) Push right axle shaft (1) (Fig. 48) out of side gear (3) with a screw driver (2) and remove shaft.

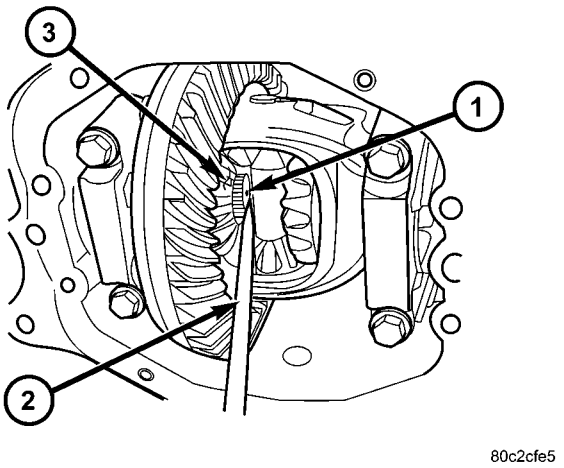

Fig. 48 RIGHT SHAFT IN SIDE GEAR

1 - AXLE SHAFT
2 - SCREWDRIVER
3 - SIDE GEAR

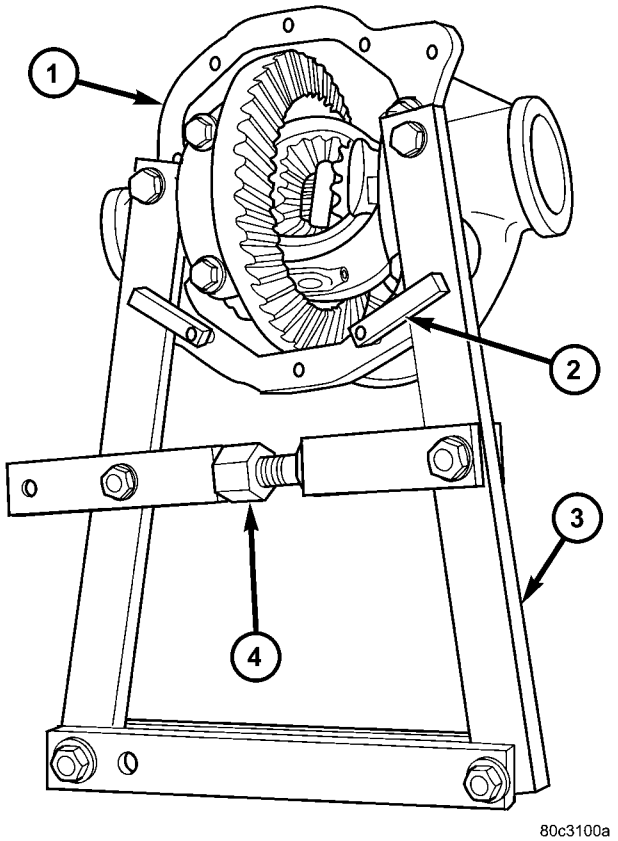

Fig. 49 DIFFERENTIAL SPREADER

1 - DIFFERENTIAL HOUSING
2 - SAFETY CLAMPS
3 - SPREADER
4 - TURNBUCKLE

(3) Mark differential bearing caps for installation reference.

(4) Loosen bearing cap bolts.

DIFFERENTIAL (Continued)

(5) Position Spreader W-129-B (3) (Fig. 49) onto differential locating holes and install the safety hold-down clamps (2). Tighten spreader turnbuckle (4) finger-tight.

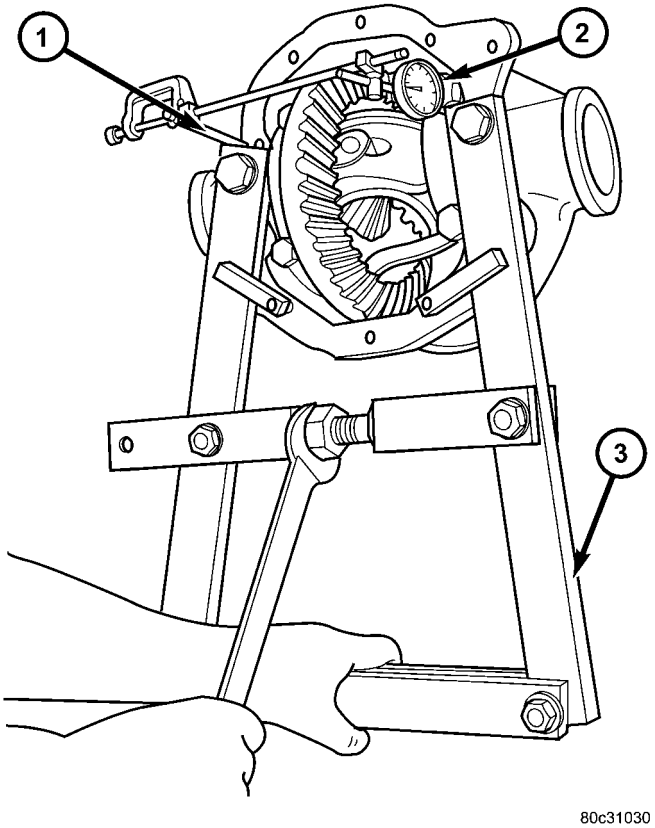

Fig. 50 SPREAD DIFFERENTIAL CASE

1 - PILOT STUD
2 - DIAL INDICATOR
3 - SPREADER

(6) Install a Pilot Stud C-3288-B (1) (Fig. 50) at the left side of the differential housing. Attach Dial Indicator C-3339 (2) to pilot stud. Load indicator plunger against the opposite side of the housing and zero the indicator.

(7) Spread differential case while measuring the distance with the dial indicator.

CAUTION: Never spread the differential housing over 0.34 mm (0.013 in). Failure to heed caution may result in damage.

(8) Remove dial indicator.

(9) Hold differential case (2) (Fig. 51) and remove bearing caps.

(10) Remove differential from the housing (1).

(11) Tag differential bearing (3) cups and shims to indicate location.

(12) Remove spreader from housing.

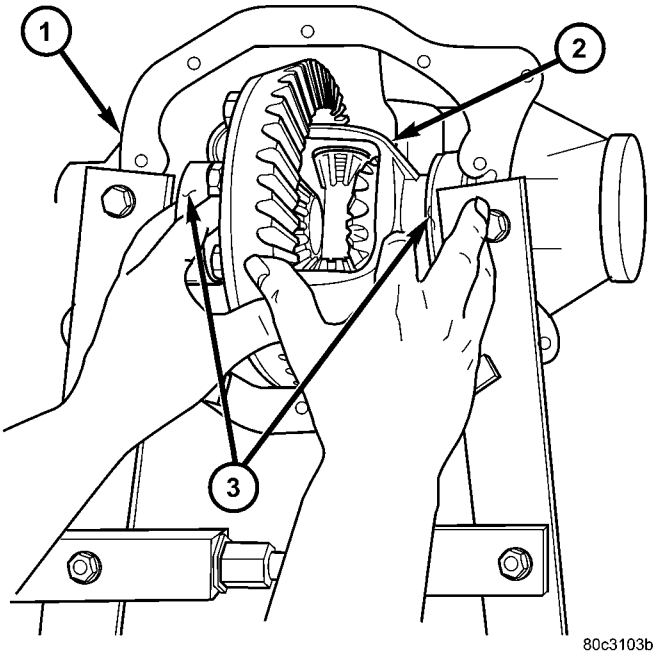

Fig. 51 DIFFERENTIAL CASE

1 - DIFFERENTIAL HOUSING
2 - DIFFERENTIAL CASE
3 - DIFFERENTIAL BEARINGS

DISASSEMBLY

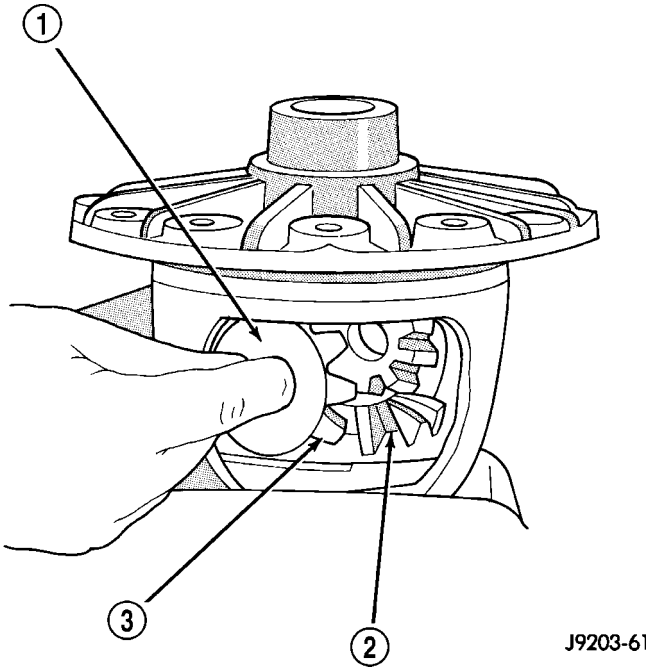

Fig. 52 PINION MATE GEAR

1 - THRUST WASHER
2 - SIDE GEAR
3 - PINION MATE GEAR

(1) Remove ring gear.

(2) Remove roll-pin holding mate shaft in housing.

DIFFERENTIAL (Continued)

(3) Remove pinion gear mate shaft.

(4) Rotate differential side gears (2) (Fig. 52) and remove pinion gears (3) and thrust washers (1).

(5) Remove differential side gears and thrust washers.

ASSEMBLY

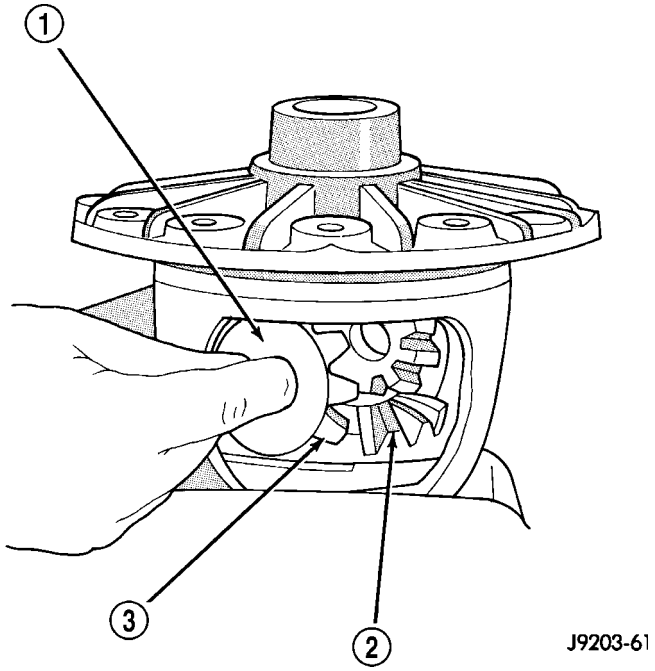

Fig. 53 PINION MATE GEAR

1 - THRUST WASHER
2 - SIDE GEAR
3 - PINION MATE GEAR

(1) Install differential side gears (2) (Fig. 53) and thrust washers.

(2) Install pinion mate gears (3) and thrust washers (1).

(3) Install pinion gear mate shaft.

(4) Align hole in the pinion gear mate shaft (2) (Fig. 54) with the hole in the differential case.

(5) Install the roll-pin (3) in the differential case with a hammer and punch (1). Peen the edge of the roll-pin hole in the differential case in two places 180° apart.

(6) Lubricate all differential components with hypoid gear lubricant.

(7) Install ring gear.

INSTALLATION

NOTE: If differential bearings or differential case are replaced, Refer to adjustments fore Differential Bearing Preload and Gear Backlash procedures.

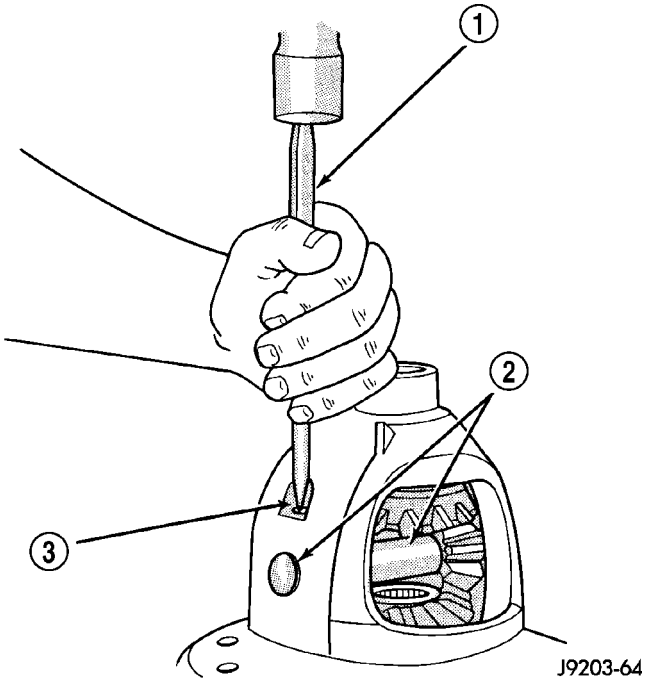

Fig. 54 PINION MATE SHAFT ROLL-PIN

1 - PUNCH
2 - PINION MATE SHAFT
3 - MATE SHAFT LOCKPIN

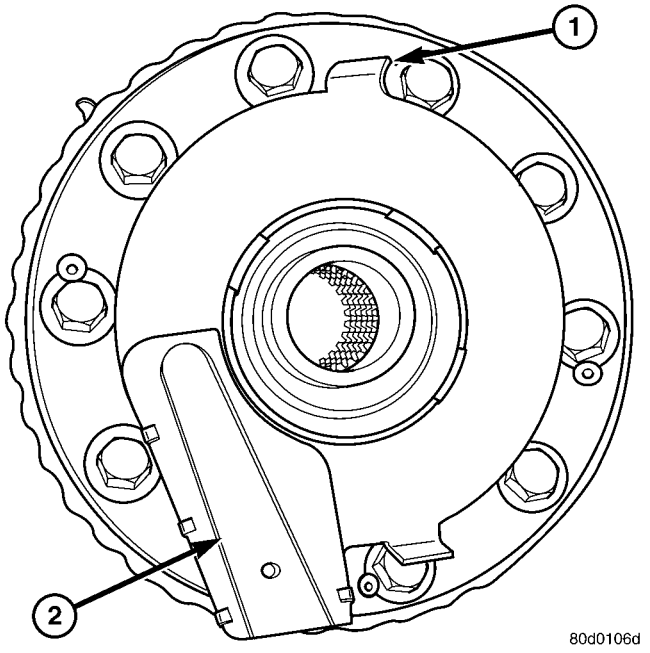

Fig. 55 VARI-LOK

1 - ANTI-ROTATION TAB
2 - OIL FEED TUBE

(1) Position Spreader W-129-B on differential location holes and install safety holddown clamps. Tighten spreader turnbuckle finger-tight.

DIFFERENTIAL (Continued)

(2) Install Pilot Stud C-3288-B to the left side of the differential housing. Attach Dial Indicator C-3339 to pilot stud. Load indicator plunger against the opposite side of the housing and zero the indicator.

(3) Spread housing while measuring the distance with the dial indicator.

CAUTION: Never spread the differential housing over 0.34 mm (0.013 in). Failure to follow these instructions will damage the housing.

(4) Remove dial indicator.

(5) Install differential case in the housing. Tap differential case to seat bearings cups and preload shims in housing.

CAUTION: On a Vari-lok® differential the oil feed tube (2) (Fig. 55) must be pointed at the bottom of the housing. Failure to follow these instructions will damage the anti-rotation tabs (1).

(6) Install bearing caps and loosely install bolts.

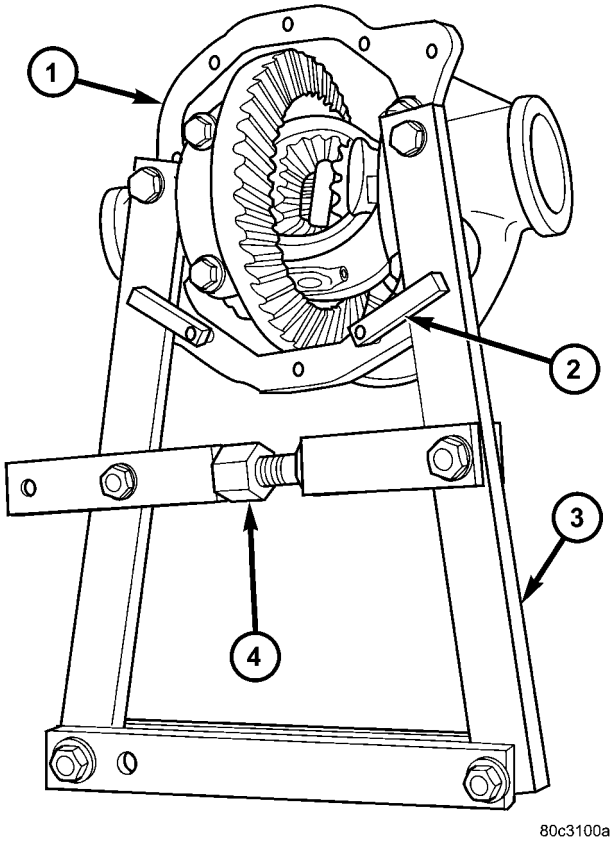

Fig. 56 DIFFERENTIAL SPREADER

1 - DIFFERENTIAL HOUSING
2 - SAFETY CLAMPS
3 - SPREADER
4 - TURNBUCKLE

(7) Loosen turnbuckle (4) (Fig. 56) remove safety clamp (2) and remove spreader (3).

(8) Tighten bearing cap bolts in a criss-cross pattern to 54-68 N·m (39-50 ft. lbs.).

(9) Install right axle shaft.

(10) Install differential housing cover.

BEARING-DIFFERENTIAL CASE

REMOVAL

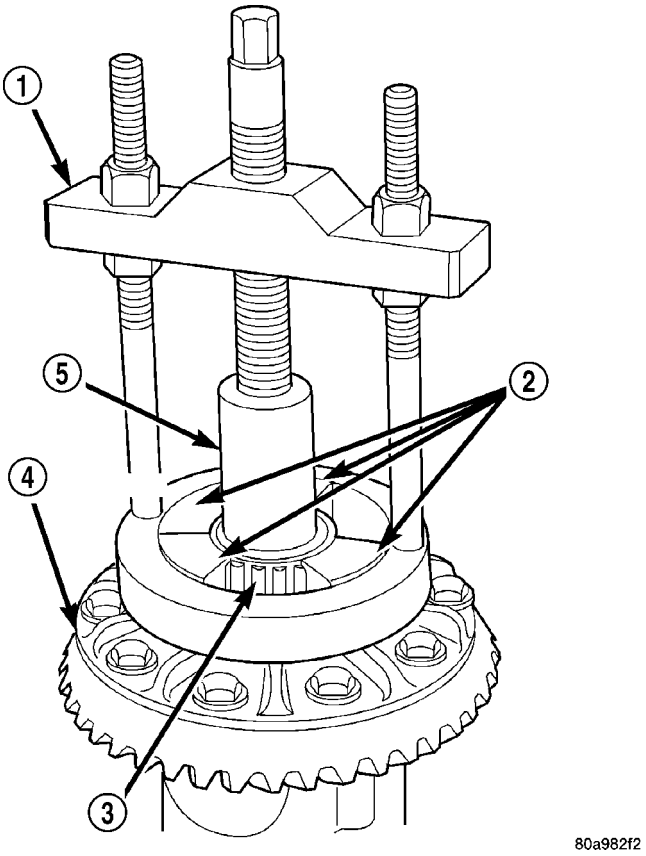

Fig. 57 DIFFERENTIAL BEARING PULLER

1 - PULLER
2 - ADAPTERS
3 - BEARING
4 - DIFFERENTIAL
5 - PLUG

(1) Remove differential from the housing.

(2) Remove bearings (3) (Fig. 57) from the differential case (4) with Puller/Press C-293-PA (1), Adapters C-293-39 (2) and Plug SP-3289 (5).

BEARING-DIFFERENTIAL CASE (Continued)

INSTALLATION

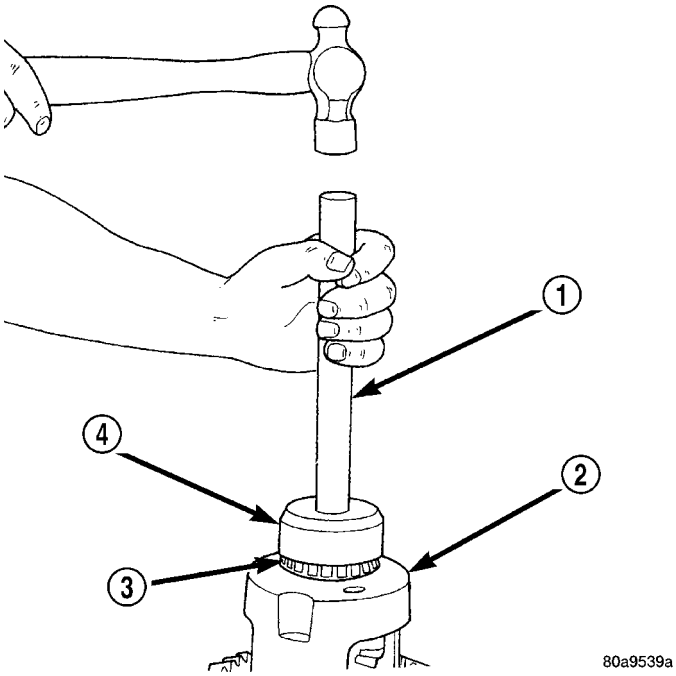

Fig. 58 DIFFERENTIAL CASE BEARINGS

1 - HANDLE
2 - DIFFERENTIAL
3 - BEARING
4 - INSTALLER

(1) Install differential case (2) (Fig. 58) bearings (3) with Installer C-3716-A (4) and Handle C-4171(1).

(2) Install differential into the housing.

GEAR-PINION/RING

REMOVAL

NOTE: The ring gear and pinion are serviced as a matched set. Never replace ring gear without replacing the matched pinion gear.

(1) Remove differential from axle housing.

(2) Place differential case (1) (Fig. 59) in a vise with soft jaws.

(3) Remove bolts holding ring gear to differential case.

(4) Driver ring gear (2) off the differential case (1) with a dead-blow hammer (3).

(5) With Spanner Wrench 6958 (1) (Fig. 60) and a short length of 1 in. pipe, hold pinion companion flange (2) and remove pinion nut.

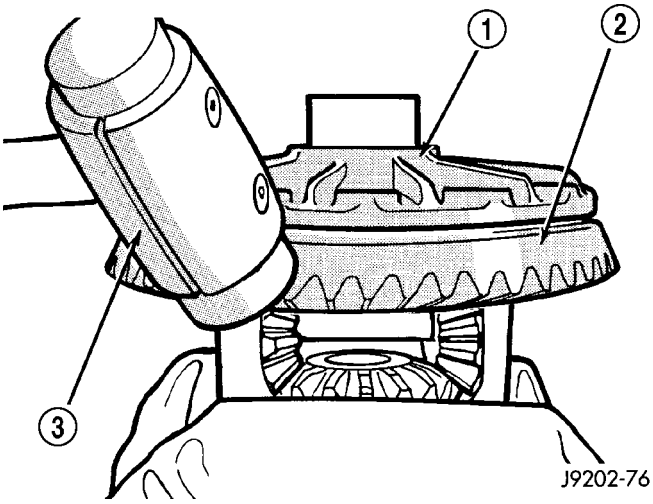

Fig. 59 RING GEAR

1 - DIFFERENTIAL CASE
2 - RING GEAR
3 - HAMMER

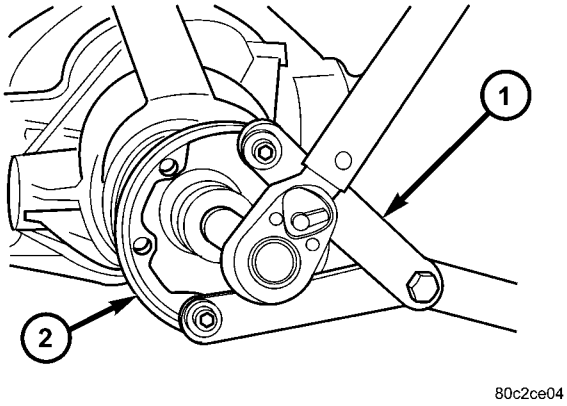

Fig. 60 PINION COMPANION FLANGE

1 - SPANNER WRENCH
2 - PINION COMPANION FLANGE

GEAR-PINION/RING (Continued)

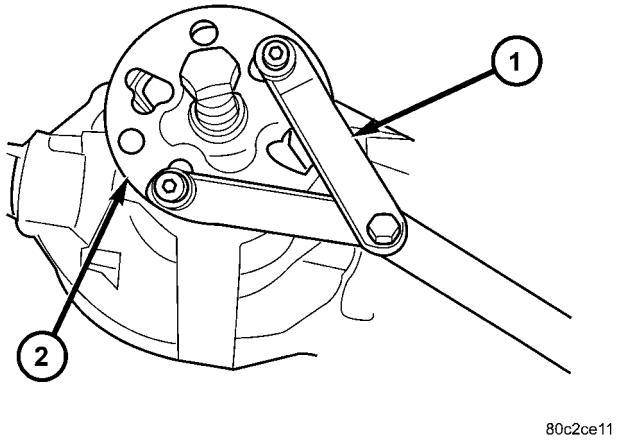

Fig. 61 PINION FLANGE REMOVER

1 - SPANNER WRENCH
2 - REMOVER

(6) Remove pinion companion flange from pinion shaft with Spanner Wrench 6958 (1) (Fig. 61) and Remover C-452 (2).

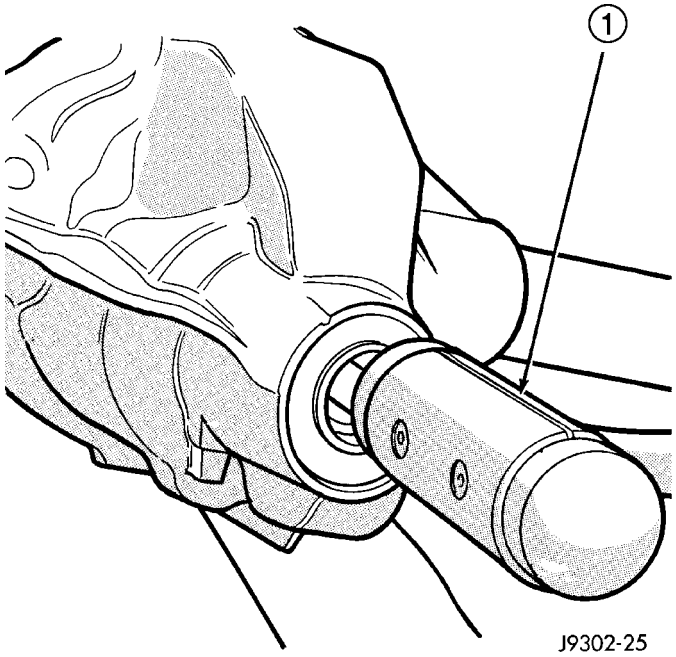

Fig. 62 PINION GEAR

1 - RAWHIDE HAMMER

(7) Remove pinion gear from housing with dead-blow hammer (1) (Fig. 62)..

(8) Remove front pinion bearing cup, bearing, oil slinger and pinion seal with Remover C-149 (1) (Fig. 63) and Handle C-4171 (2).

(9) Remove rear pinion bearing cup with Remover C-4307 (1) (Fig. 64) and Handle C-4171 (2).

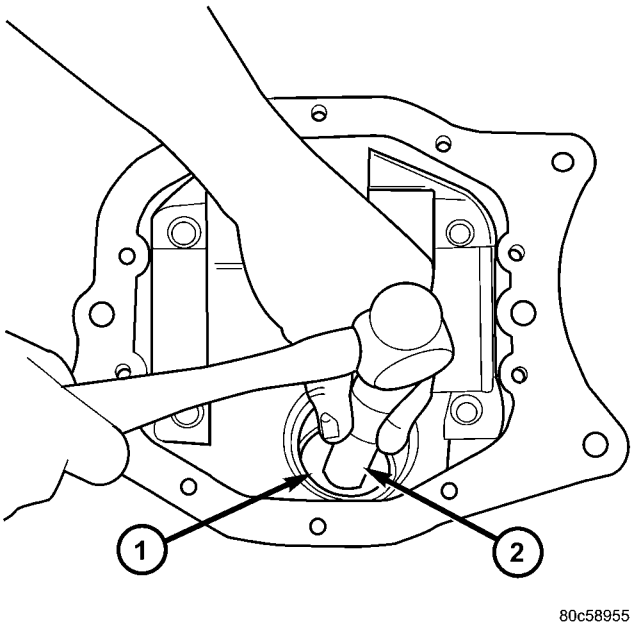

Fig. 63 FRONT BPINION BEARING CUP

1 - REMOVER
2 - HANDLE

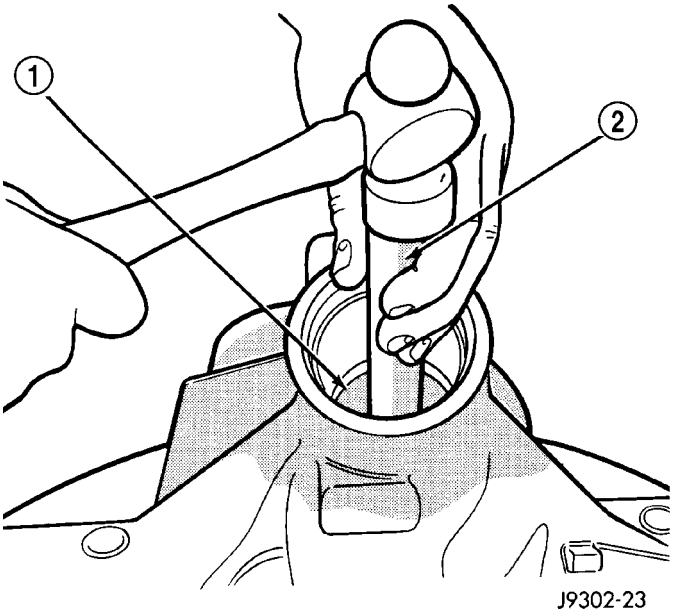

Fig. 64 REAR PINION BEARING CUP

1 - REMOVER
2 - HANDLE

GEAR-PINION/RING (Continued)

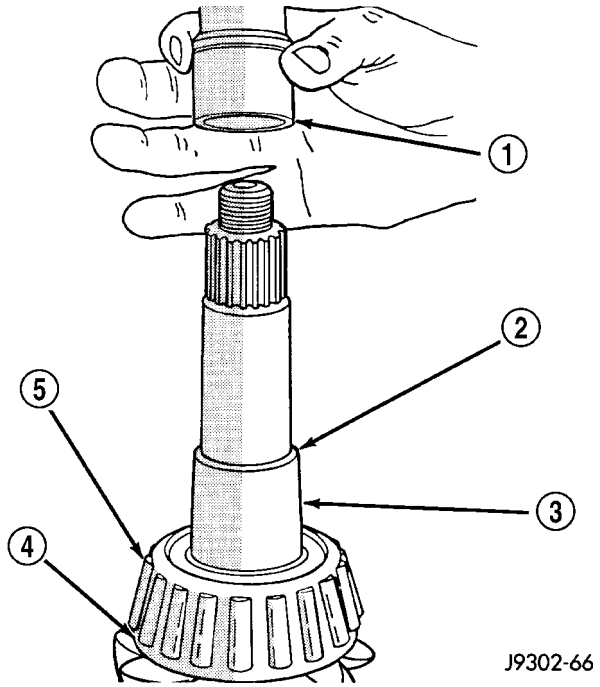

Fig. 65 COLLAPSIBLE PRELOAD SPACER

1 - COLLAPSIBLE SPACER
2 - SHOULDER
3 - PINION GEAR
4 - OIL SLINGER
5 - REAR BEARING

(10) Remove collapsible spacer (1) (Fig. 65) from pinion gear (3).

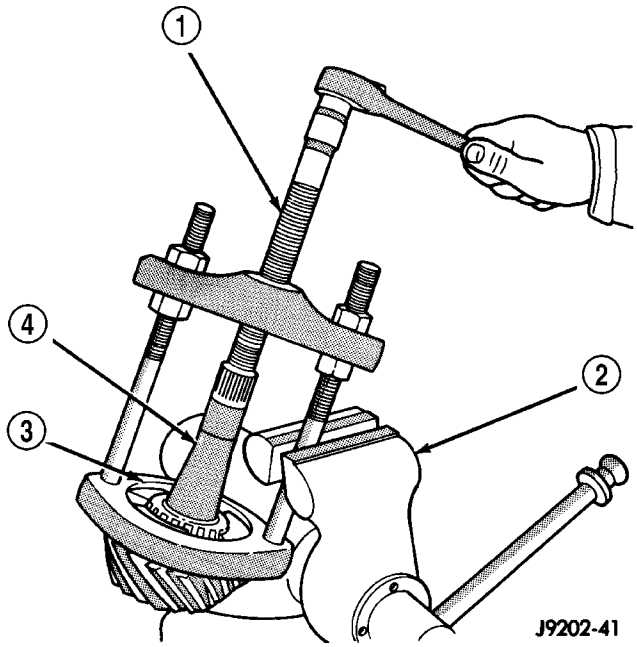

Fig. 66 REAR PINION BEARING

1 - PULLER
2 - VISE
3 - ADAPTERS
4 - PINION GEAR SHAFT

(11) Remove rear pinion bearing from the pinion (4) (Fig. 66) with Puller/Press C-293-PA (1) and Adapters C-293-42 (3). Remove oil slinger/pinion depth shim from the pinion shaft and record thickness.

INSTALLATION

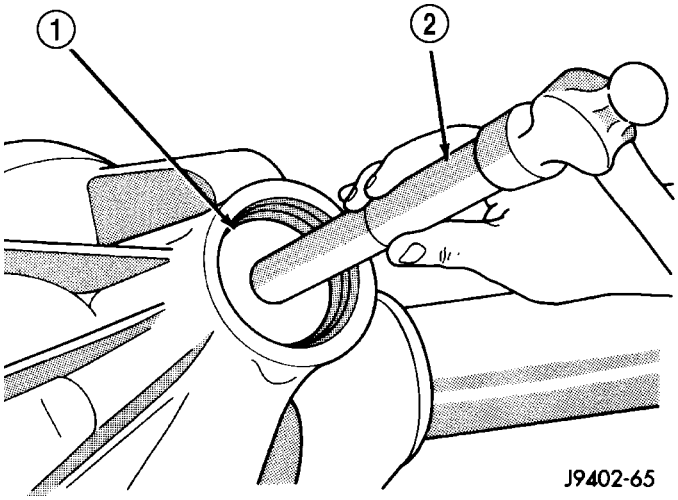

Fig. 67 FRONT PINION BEARING CUP

1 - INSTALLER
2 - HANDLE

(1) Install front pinion bearing, and oil slinger if equipped.

(2) Apply a light coating of gear lubricant on the lip of pinion seal and install seal with Installer 8681.

NOTE: Pinion depth shims are placed between the rear pinion bearing and the pinion gear head to achieve proper ring and pinion gear mesh. If ring and pinion gears are reused, the pinion oil slinger/ depth shim should not require replacement. Refer to Adjustments (Pinion Gear Depth) to select the proper thickness shim before installing pinion gear.

(3) Apply Mopar Door Ease or equivalent lubricant to outside surface of pinion bearing cups.

(4) Install rear bearing cup with Installer C-4308 and Handle C-4171.

(5) Install front bearing cup with Installer D-146 (1) (Fig. 67) and Handle C-4171 (1).

(6) Install rear pinion bearing (4) (Fig. 68) and oil slinger/depth shim (2) onto the pinion shaft (3) with Installer 6448 (1) and a press (1).

(7) Install a **new** collapsible spacer (1) (Fig. 69) on pinion shaft (3) and install the pinion into the housing.

(8) Install pinion companion flange, with Installer W-162-D, Cup 8109 and Spanner Wrench 6958.

GEAR-PINION/RING (Continued)

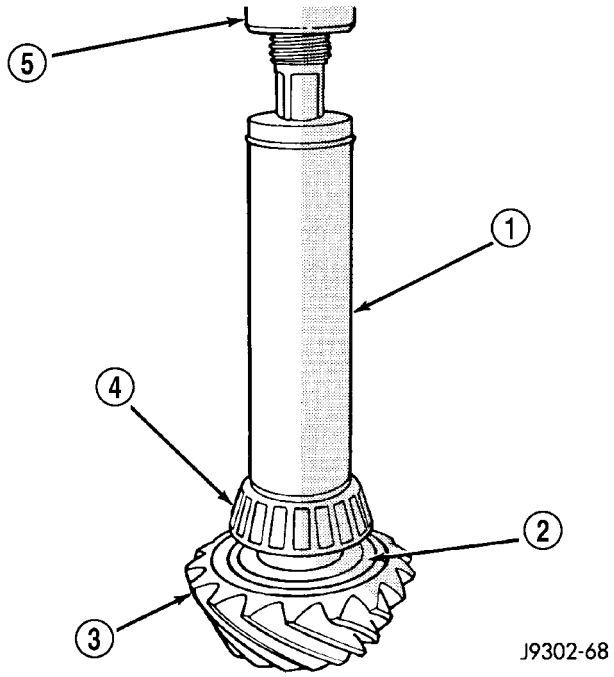

Fig. 68 REAR PINION BEARING

1 - INSTALLER
2 - OIL SLINGER
3 - PINION GEAR
4 - REAR PINION BEARING
5 - PRESS

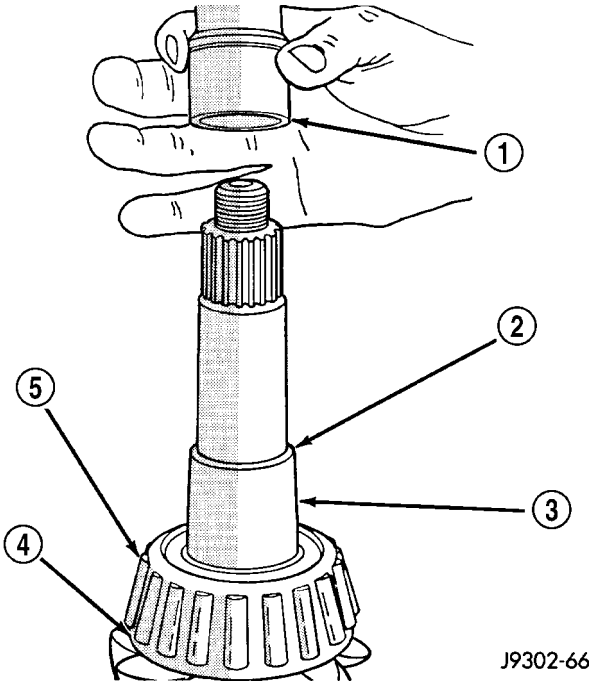

Fig. 69 COLLAPSIBLE PRELOAD SPACER

1 - COLLAPSIBLE SPACER
2 - SHOULDER
3 - PINION GEAR
4 - OIL SLINGER
5 - REAR BEARING

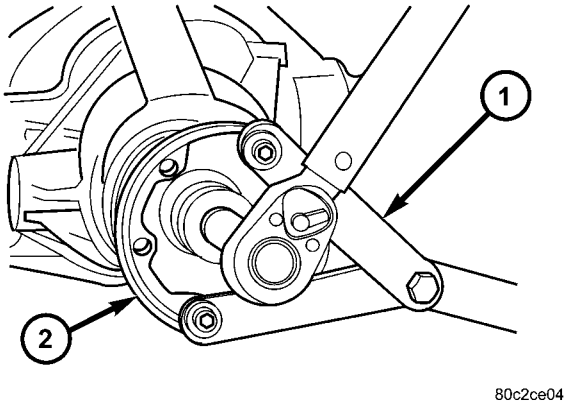

Fig. 70 PINION FLANGE NUT

1 - SPANNER WRENCH
2 - PINION COMPANION FLANGE

(9) Install pinion a **new** nut onto the pinion gear and tighten the nut to 216 N·m (160 ft. lbs.). **Do not over-tighten.**

CAUTION: Never loosen pinion gear nut to decrease pinion rotating torque and never exceed specified preload torque. Failure to follow these instructions will result in damage.

(10) Use Spanner Wrench 6958 (1) (Fig. 70), a length of 1 in. pipe and a torque wrench set at 678 N·m (500 ft. lbs.) and crush collapsible spacer until bearing end play is taken up.

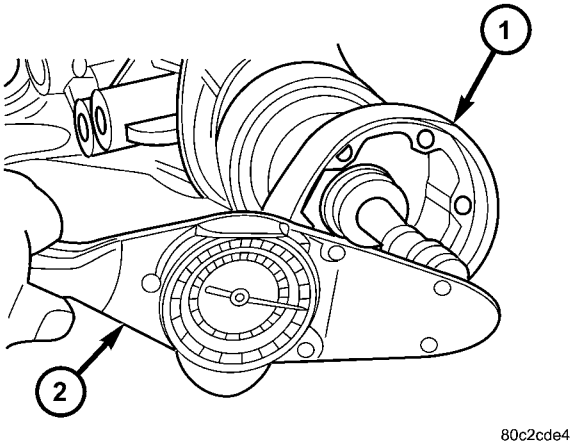

Fig. 71 PINION ROTATING TORQUE

1 - PINION COMPANION FLANGE
2 - TORQUE WRENCH

(11) Slowly tighten the nut in 6.8 N·m (5 ft. lb.) increments until the required rotating torque is achieved. Measure rotating torque frequently to avoid over crushing the collapsible spacer.

GEAR-PINION/RING (Continued)

(12) Rotate the pinion a minimum of ten times. Verify pinion (1) (Fig. 71) rotates smoothly and check rotating torque with an inch pound torque wrench (2). Pinion gear rotating torque is:

- Original Bearings: 1 to 2.25 N·m (10 to 20 in. lbs.).
- New Bearings: 1.69 to 2.82 N·m (15 to 25 in. lbs.).

(13) Invert differential case and start two ring gear bolts. This will provide case-to-ring gear bolt hole alignment.

(14) Invert differential case (4) (Fig. 72) in the vise. Install **new** ring gear (3) bolts (2) and alternately tighten to 108 N·m (80 ft. lbs.).

CAUTION: Never reuse the ring gear bolts. Failure to follow these instructions will result in damage.

(15) Install differential in housing and verify differential bearing preload, gear mesh and contact pattern.

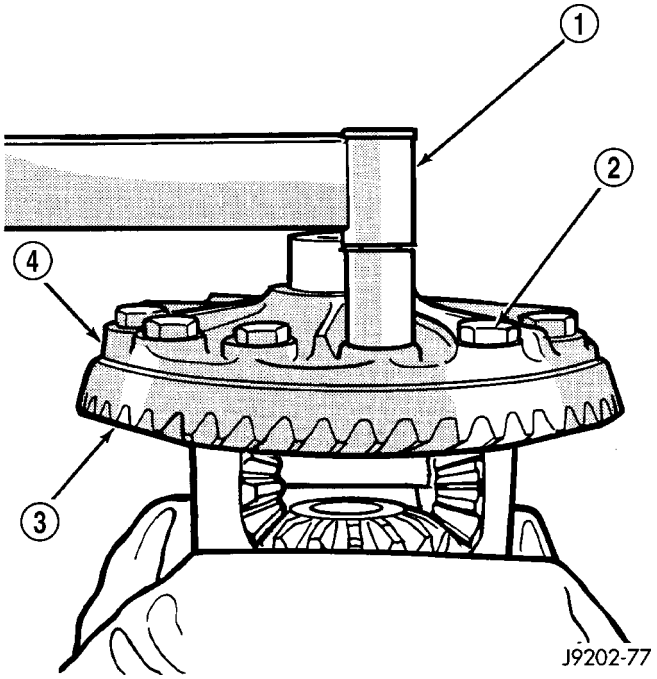

Fig. 72 RING GEAR BOLTS

1 - TORQUE WRENCH
2 - RING GEAR BOLTS
3 - RING GEAR
4 - DIFFERENTIAL CASE

REAR AXLE - 8 1/4

TABLE OF CONTENTS

	page
REAR AXLE - 8 1/4	
DIAGNOSIS AND TESTING	52
REMOVAL	55
INSTALLATION	56
ADJUSTMENTS	57
SPECIFICATIONS	63
SPECIAL TOOLS	63
COVER-DIFFERENTIAL	
REMOVAL	66
INSTALLATION	66
SHAFT-AXLE	
REMOVAL	66
INSTALLATION	67
SEAL-AXLE SHAFT	
REMOVAL	67
INSTALLATION	67
BEARING-AXLE	
REMOVAL	68
INSTALLATION	68
SEAL-PINION	
REMOVAL	69
INSTALLATION	69
DIFFERENTIAL	
REMOVAL	71
DISASSEMBLY	72
ASSEMBLY	73
INSTALLATION	73
DIFFERENTIAL-TRAC-LOK	
OPERATION	74
DIAGNOSIS AND TESTING DIFFERENTIAL-TRAC-LOK	74
BEARING-DIFFERENTIAL CASE	
REMOVAL	75
INSTALLATION	75
GEAR-PINION/RING	
REMOVAL	75
INSTALLATION	78

REAR AXLE - 8 1/4

DIAGNOSIS AND TESTING

GEAR NOISE

Axle gear noise can be caused by insufficient lubricant, incorrect backlash, incorrect pinion depth, tooth contact, worn/damaged gears, or the carrier housing not having the proper offset and squareness.

Gear noise usually happens at a specific speed range. The noise can also occur during a specific type of driving condition. These conditions are acceleration, deceleration, coast, or constant load.

When road testing, first warm-up the axle fluid by driving the vehicle at least 5 miles and then accelerate the vehicle to the speed range where the noise is the greatest. Shift out-of-gear and coast through the peak-noise range. If the noise stops or changes greatly check for:

- Insufficient lubricant.
- Incorrect ring gear backlash.
- Gear damage.

Differential side and pinions gears, usually do not cause noise during straight-ahead driving, when the gears are unloaded. The side gears are loaded during turns. A worn pinion mate shaft can also cause a snapping or a knocking noise.

BEARING NOISE

Bearing noise can be either a whining or a growling sound.

Pinion bearings have a constant high pitch noise, because it rotates at a faster rate. This noise changes with vehicle speed. If noise is heard under a load, the rear pinion bearing is the source. If noise is heard during a coast, the front pinion bearing is the source.

Differential bearings usually produce a low pitch noise. The differential bearing noise is constant and varies only with vehicle speed.

Axle shaft bearing noise generally changes when the bearings are loaded. Turn vehicle sharply to the left and the right during a road test. This will load and unload the bearings and change the noise level. If axle bearing damage is slight, the noise is usually not noticeable at speeds above 30 m.p.h.

LOW SPEED KNOCK

Low speed knock is generally caused by:

- Worn U-joints/CV joint.
- Worn side-gear thrust washers.
- Worn pinion shaft bore.

VIBRATION

Vibration at the rear of the vehicle is usually caused by:

- Damaged drive shaft.

REAR AXLE - 8 1/4 (Continued)

- Missing drive shaft balance weight(s).
- Worn or out-of-balance wheels.
- Loose wheel lug nuts.
- Worn U-joints/CV joint.
- Loose/broken springs.
- Damaged axle shaft bearing(s).
- Loose pinion gear nut.
- Excessive pinion yoke run out.
- Bent axle shaft(s).

Check for loose or damaged front-end components or engine/transmission mounts. These components can contribute to what appears to be an axle vibration. Also look at engine accessories, brackets and drive belts.

NOTE: All driveline components should be examined before starting any repair.

DRIVELINE SNAP

A snap or clunk noise when the vehicle is shifted into gear or the clutch engaged, can be caused by:

- High engine idle speed.
- Transmission shift operation.
- Loose engine/transmission/transfer case mounts.
- Worn U-joints/CV joint.
- Loose spring mounts.
- Loose pinion gear nut and yoke.
- Excessive ring gear backlash.
- Excessive side gear to case clearance.

To determined the source of a snap/clunk noise, raise vehicle on a hoist with the wheels free to rotate. Have a helper shift the transmission into gear and listen for the noise.

DIAGNOSTIC CHART

Condition	Possible Causes	Correction
Wheel Noise	1. Wheel loose.	1. Tighten loose nuts.
	2. Faulty, brinelled wheel bearing.	2. Replace bearing.
Axle Shaft Noise	1. Misaligned axle tube.	1. Inspect axle tube alignment. Correct as necessary.
	2. Bent or sprung axle shaft.	2. Inspect and correct as necessary.
Axle Shaft Broke	1. Misaligned axle tube.	1. Replace the broken shaft after correcting tube mis-alignment.
	2 Vehicle overloaded.	2. Replace broken shaft and avoid excessive weight on vehicle.
	3. Erratic clutch operation.	3. Replace broken shaft and avoid or correct erratic clutch operation.
	4. Grabbing clutch.	4. Replace broken shaft and inspect and repair clutch as necessary.
Differential Cracked	1. Improper adjustment of the differential bearings.	1. Replace case and inspect gears and bearings for further damage. Set differential bearing pre-load properly.
	2. Excessive ring gear backlash.	2. Replace case and inspect gears and bearings for further damage. Set ring gear backlash properly.
	3. Vehicle overloaded.	3. Replace case and inspect gears and bearings for further damage. Avoid excessive vehicle weight.
	4. Erratic clutch operation.	4. Replace case and inspect gears and bearings for further damage. Avoid erratic use of clutch.

REAR AXLE - 8 1/4 (Continued)

Condition	Possible Causes	Correction
Differential Gears Scored	1. Insufficient lubrication.	1. Replace scored gears. Fill differential with the correct fluid type and quantity.
	2. Improper grade of lubricant.	2. Replace scored gears. Fill differential with the correct fluid type and quantity.
	3. Excessive spinning of one wheel/tire.	3. Replace scored gears. Inspect all gears, pinion bores, and shaft for damage. Service as necessary.
Loss Of Lubricant	1. Lubricant level too high.	1. Drain lubricant to the correct level.
	2. Worn axle shaft seals.	2. Replace seals.
	3. Cracked differential housing.	3. Repair as necessary.
	4. Worn pinion seal.	4. Replace seal.
	5. Worn/scored yoke.	5. Replace yoke and seal.
	6. Axle cover not properly sealed.	6. Remove, clean, and re-seal cover.
Axle Overheating	1. Lubricant level low.	1. Fill differential to correct level.
	2. Improper grade of lubricant.	2. Fill differential with the correct fluid type and quantity.
	3. Bearing pre-loads too high.	3. Re-adjust bearing pre-loads.
	4. Insufficient ring gear backlash.	4. Re-adjust ring gear backlash.
Gear Teeth Broke	1. Overloading.	1. Replace gears. Examine other gears and bearings for possible damage.
	2. Erratic clutch operation.	2. Replace gears and examine the remaining parts for damage. Avoid erratic clutch operation.
	3. Ice-spotted pavement.	3. Replace gears and examine remaining parts for damage.
	4. Improper adjustments.	4. Replace gears and examine remaining parts for damage. Ensure ring gear backlash is correct.

REAR AXLE - 8 1/4 (Continued)

Condition	Possible Causes	Correction
Axle Noise	1. Insufficient lubricant.	1. Fill differential with the correct fluid type and quantity.
	2. Improper ring gear and pinion adjustment.	2. Check ring gear and pinion contact pattern. Adjust backlash or pinion depth.
	3. Unmatched ring gear and pinion.	3. Replace gears with a matched ring gear and pinion.
	4. Worn teeth on ring gear and/or pinion.	4. Replace ring gear and pinion.
	5. Loose pinion bearings.	5. Adjust pinion bearing pre-load.
	6. Loose differential bearings.	6. Adjust differential bearing pre-load.
	7. Mis-aligned or sprung ring gear.	7. Measure ring gear run-out. Replace components as necessary.
	8. Loose differential bearing cap bolts.	8. Inspect differential components and replace as necessary. Ensure that the bearing caps are torqued tot he proper specification.
	9. Housing not machined properly.	9. Replace housing.

REMOVAL

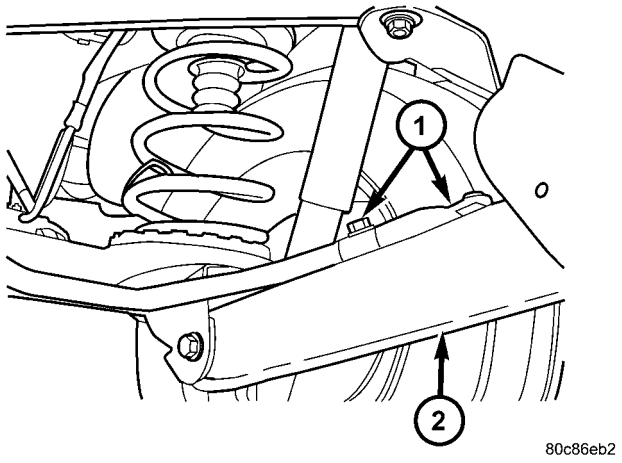

Fig. 1 STABILIZER BAR MOUNTS

1 - STABILIZER BAR MOUNTING BOLTS
2 - LOWER SUSPENSION ARM

(1) With vehicle in neutral, position vehicle on hoist.

(2) Position a lift/jack under the axle and secure axle to device.

(3) Mark propeller shaft and pinion yoke for installation reference.

(4) Remove propeller shaft and suspend under the vehicle.

(5) Remove brake components.

(6) Remove vent hose from the axle shaft tube.

(7) Remove the stabilizer bar bolts (1) from lower control arm (2) (Fig. 1).

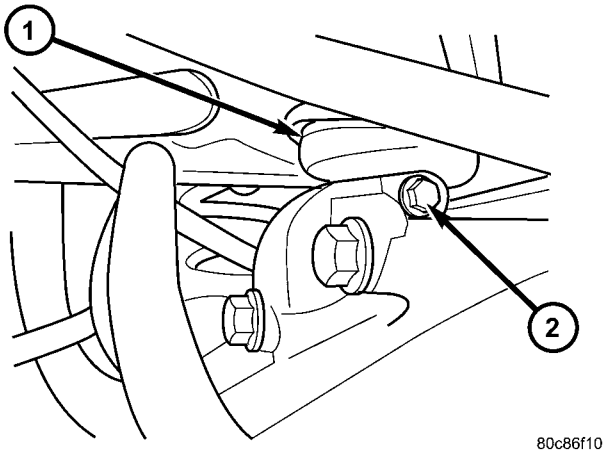

Fig. 2 BALL JOINT PINCH BOLT

1 - UPPER BALL JOINT
2 - PINCH BOLT

(8) Remove upper control arm ball joint (1) pinch bolt (2) from bracket (Fig. 2).

REAR AXLE - 8 1/4 (Continued)

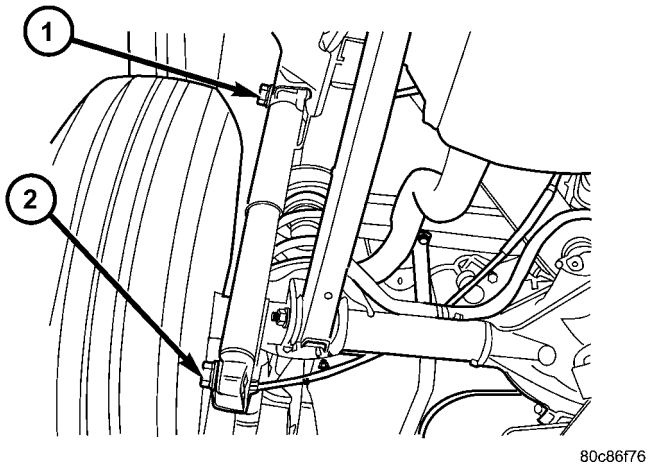

Fig. 3 SHOCK ABSORBER

1 - UPPER MOUNTING BOLT
2 - LOWER MOUNTING BOLT

(9) Remove shock absorbers from axle brackets (2) (Fig. 3).

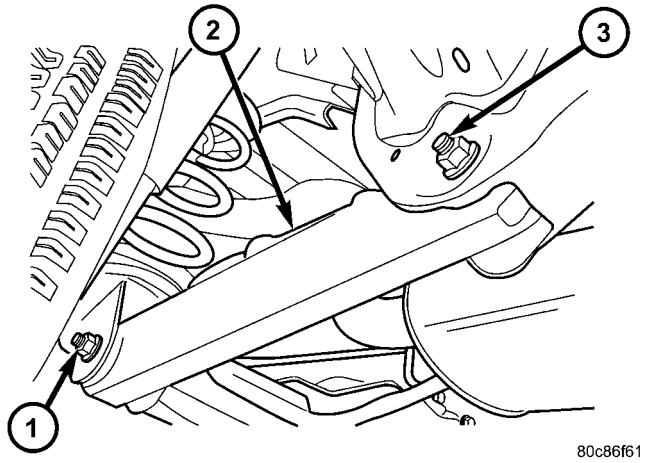

Fig. 4 LOWER SUSPENSION ARM

1 - AXLE BRACKET BOLT
2 - LOWER CONTROL ARM
3 - BODY BRACKET BOLT

(10) Loosen all lower control arms (2) mounting bolts (Fig. 4).

(11) Lower axle enough to remove coil springs and spring insulators.

(12) Remove lower control arm bolts from the axle brackets (1).

(13) Lower and remove the axle.

INSTALLATION

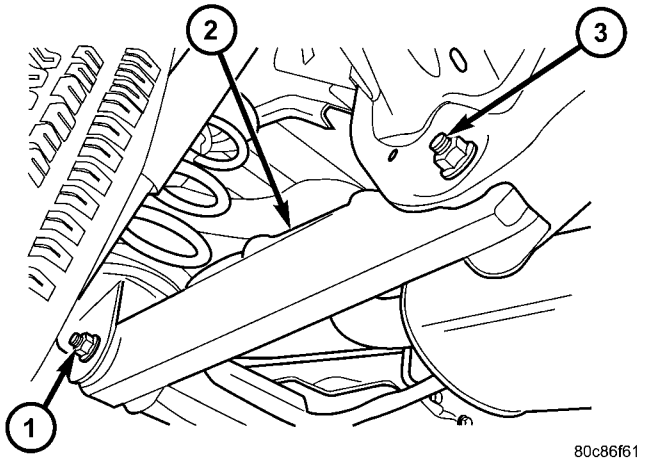

Fig. 5 LOWER SUSPENSION ARM

1 - AXLE BRACKET BOLT
2 - LOWER CONTROL ARM
3 - BODY BRACKET BOLT

CAUTION: The weight of the vehicle must be supported by the springs before the lower control arms are tightened. This must be done to maintain vehicle ride height and prevent premature bushing failure.

(1) Raise the axle under the vehicle.

(2) Install lower control arms (2) onto the axle brackets (1) and loosely install the mounting bolts (Fig. 5).

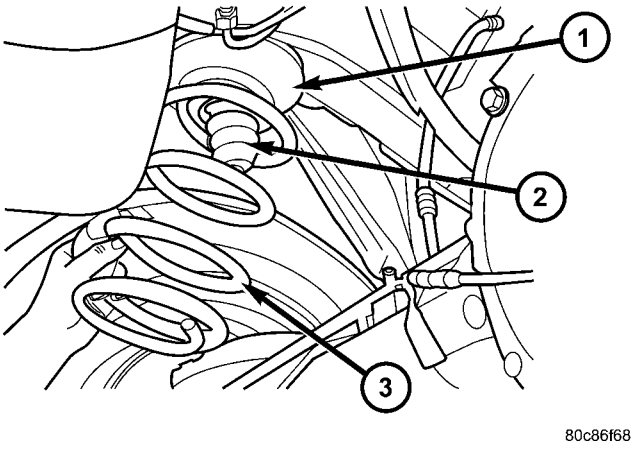

Fig. 6 COIL SPRING

1 - UPPER INSULATOR
2 - JOUNCE BUMPER
3 - COIL SPRING

(3) Install coil spring isolators (1) and springs (3) (Fig. 6).

(4) Raise axle up until springs are seated.

REAR AXLE - 8 1/4 (Continued)

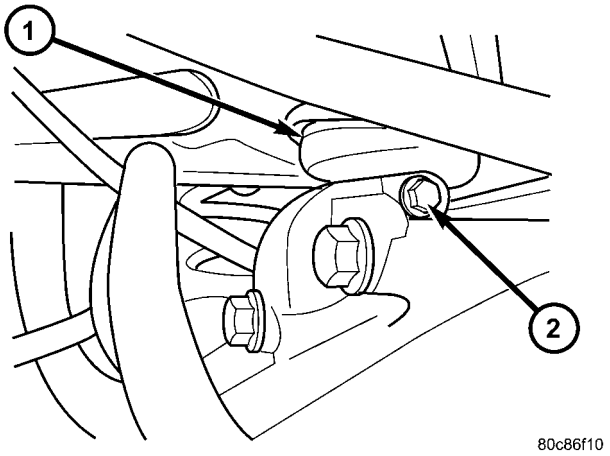

Fig. 7 BALL JOINT PINCH BOLT

1 - UPPER BALL JOINT
2 - PINCH BOLT

(5) Install upper control arm ball joint (1) into axle bracket and tighten pinch bolt (2) to torque specification (Fig. 7).

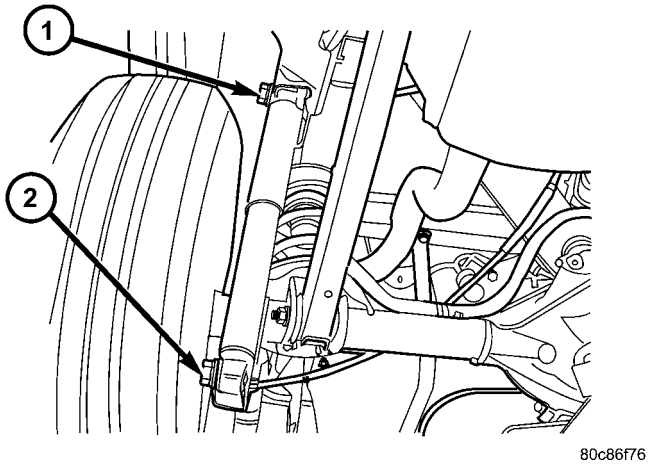

Fig. 8 SHOCK ABSORBER

1 - UPPER MOUNTING BOLT
2 - LOWER MOUNTING BOLT

(6) Install shock absorbers and tighten bolts (2) to torque specification (Fig. 8).

(7) Install stabilizer bar and tighten nuts to torque specification.

(8) Install brake components.

(9) Install axle vent hose.

(10) Install propeller shaft with reference marks.

(11) Install the wheels and tires.

(12) Remove lifting device from axle and lower the vehicle.

(13) Tighten the lower control arm bolts to torque specification.

ADJUSTMENTS

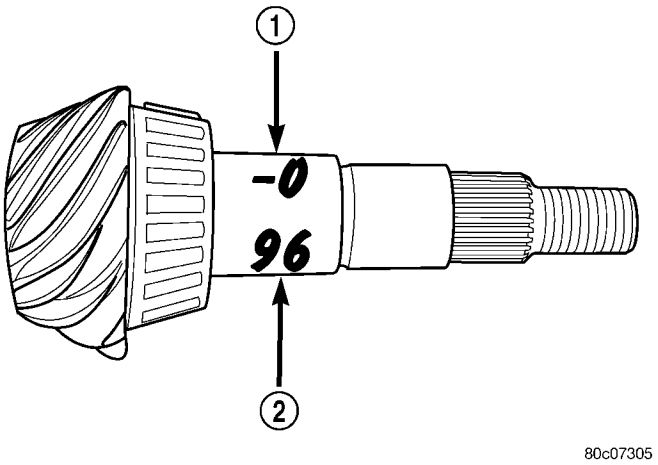

Fig. 9 PINION ID NUMBERS

1 - VARIANCE NUMBER
2 - SEQUENCE NUMBER

Ring gear and pinion are supplied as matched sets. Identifying numbers for the ring gear and pinion are painted onto the pinion gear shaft and the side of the ring gear. A plus (+) number, minus (–) number or zero (0) along with the gear set sequence number (2) (01 to 99) is on each gear. This first number (1) the amount (in thousandths of an inch) the depth varies from the standard depth setting of a pinion marked with a (0). The next two numbers are the sequence number of the gear set (Fig. 9). The standard depth provides the best teeth contact pattern.

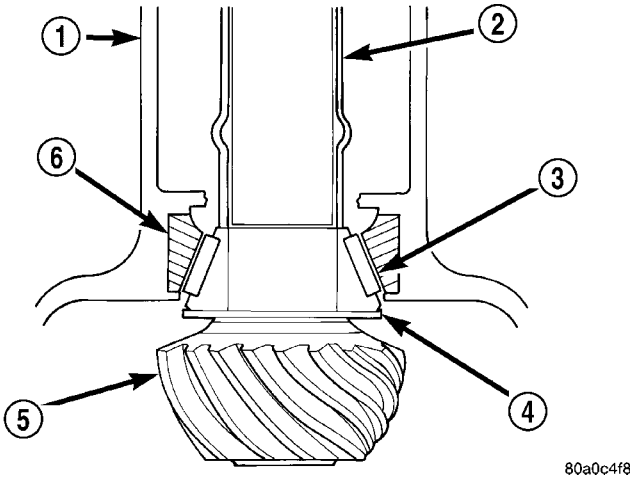

Fig. 10 ADJUSTMENT SHIM LOCATIONS

1 - AXLE HOUSING
2 - COLLAPSIBLE SPACER
3 - PINION BEARING
4 - PINION DEPTH SHIM
5 - PINION GEAR
6 - BEARING CUP

REAR AXLE - 8 1/4 (Continued)

Compensation for pinion depth variance is achieved with select shims (4). The shims are placed behind the rear pinion bearing (Fig. 10).

If installing a new gear, note the depth variance number of the original and replacement pinion. Add or subtract this number from the original depth shim/oil slinger to compensate for the difference in the depth variances. The numbers represent thousands of an inch deviation from the standard. If the number is negative, add that value to the required thickness of the depth shims. If the number is positive, subtract that value from the thickness of the depth shim.

Pinion Gear Depth Variance Chart: Note where Old and New Pinion Marking columns intersect. Intersecting figure represents plus or minus the amount needed.

PINION GEAR DEPTH VARIANCE

Original Pinion Gear Depth Variance	Replacement Pinion Gear Depth Variance									
	−4	−3	−2	−1	0	+1	+2	+3	+4	
+4		+0.008	+0.007	+0.006	+0.005	+0.004	+0.003	+0.002	+0.001	0
+3		+0.007	+0.006	+0.005	+0.004	+0.003	+0.002	+0.001	0	−0.001
+2		+0.006	+0.005	+0.004	+0.003	+0.002	+0.001	0	−0.001	−0.002
+1		+0.005	+0.004	+0.003	+0.002	+0.001	0	−0.001	−0.002	−0.003
0		+0.004	+0.003	+0.002	+0.001	0	−0.001	−0.002	−0.003	−0.004
−1		+0.003	+0.002	+0.001	0	−0.001	−0.002	−0.003	−0.004	−0.005
−2		+0.002	+0.001	0	−0.001	−0.002	−0.003	−0.004	−0.005	−0.006
−3		+0.001	0	−0.001	−0.002	−0.003	−0.004	−0.005	−0.006	−0.007
−4		0	−0.001	−0.002	−0.003	−0.004	−0.005	−0.006	−0.007	−0.008

PINION DEPTH MEASUREMENT

Measurements are taken with pinion bearing cups and pinion bearings installed in the housing. Take measurements with Pinion Gauge Set and Dial Indicator C-3339 (1) (Fig. 11).

(1) Assemble Pinion Height Block 6739 (2), Pinion Block 8540 (1) and rear pinion bearing onto Screw 6741 (Fig. 12).

(2) Insert assembled height gauge components, rear bearing and screw into housing through pinion bearing cups.

(3) Install front pinion bearing and Cone-Nut 6740 on the screw. Tighten Cone-Nut until Torque To Rotate screw is 1.7 N·m (15 in. lbs.).

(4) Place Arbor Disc 8541 (1) on Arbor D-115-3 (3) in position in the housing side bearing cradles. Install differential bearing caps on arbor discs and tighten cap bolts to 41 N·m (30 ft. lbs.) (Fig. 13).

(5) Assemble Dial Indicator C-3339 (3) into Scooter Block D-115-2 (2) and secure set screw.

(6) Place Scooter Block/Dial Indicator in position in axle housing so dial probe and scooter block are flush against the rearward surface of the pinion height block. Hold scooter block in place and zero the dial indicator. Tighten dial indicator face lock screw.

(7) Slowly slide the dial indicator probe over the edge of the pinion height block.

(8) Slide the dial indicator probe across the gap between the pinion height block and the arbor bar (1) with the scooter block against the pinion height block. When dial probe contacts the arbor bar, the dial pointer will turn clockwise. Continue moving the dial probe to the crest of the arbor bar and record the highest reading. If the dial indicator can not achieve a zero reading, the rear bearing cup or the pinion depth gauge set is not installed correctly.

(9) Select a shim equal to the dial indicator reading, plus the drive pinion gear depth variance number marked on the shaft of the pinion. For example, if the depth variance is –2, add +0.002 in. to the dial indicator reading. Then subtract 0.04064 mm (0.0016 in.) from the total measurement. This will be the correct shim selection for the pinion height. (Fig. 14).

DIFFERENTIAL BEARING PRELOAD AND GEAR BACKLASH

The following must be considered when adjusting bearing preload and gear backlash :

- The maximum ring gear (2) backlash variation is 0.003 inch (0.076 mm).

REAR AXLE - 8 1/4 (Continued)

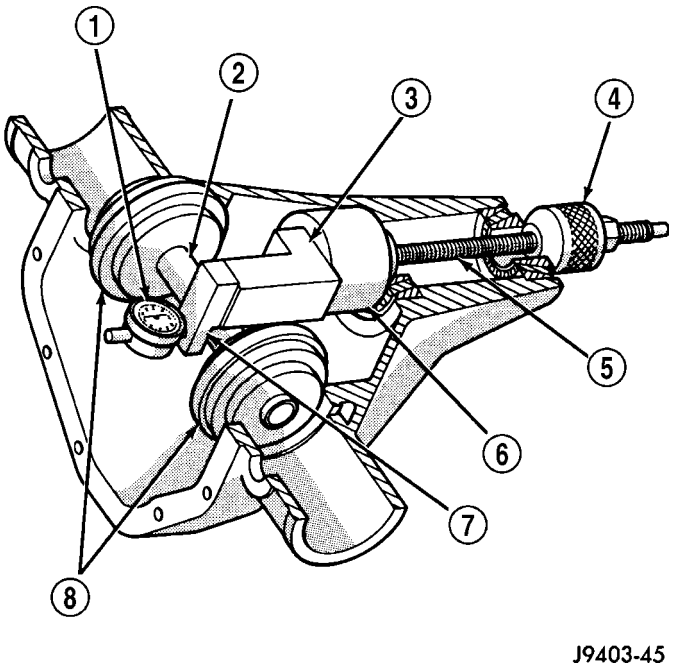

Fig. 11 PINION DEPTH GAUGE

1 - DIAL INDICATOR
2 - ARBOR
3 - PINION HEIGHT BLOCK
4 - CONE
5 - SCREW
6 - PINION BLOCK
7 - SCOOTER BLOCK
8 - ARBOR DISC

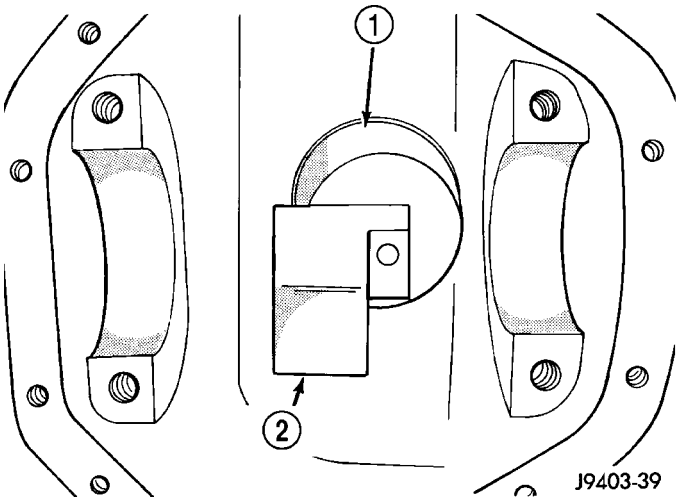

Fig. 12 PINION HEIGHT BLOCK

1 - PINION BLOCK
2 - PINION HEIGHT BLOCK

- Mark the gears so the same teeth are meshed during all backlash measurements.
- Maintain the torque while adjusting the bearing preload and ring gear backlash.
- Excessive adjuster torque will introduce a high bearing load and cause premature bearing failure.

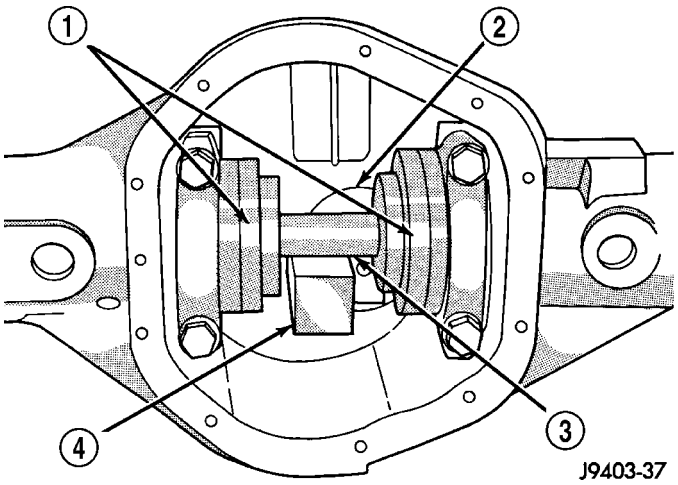

Fig. 13 GAUGE TOOLS IN HOUSING

1 - ARBOR DISC
2 - PINION BLOCK
3 - ARBOR
4 - PINION HEIGHT BLOCK

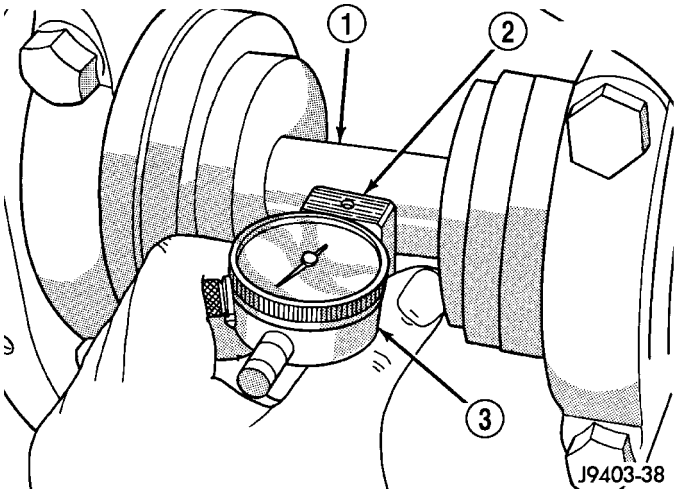

Fig. 14 PINION GEAR DEPTH

1 - ARBOR
2 - SCOOTER BLOCK
3 - DIAL INDICATOR

Insufficient adjuster torque can result in excessive differential case free-play and ring gear noise.

- Insufficient adjuster torque will not support the ring gear correctly and can cause excessive differential case free-play and ring gear noise.

REAR AXLE - 8 1/4 (Continued)

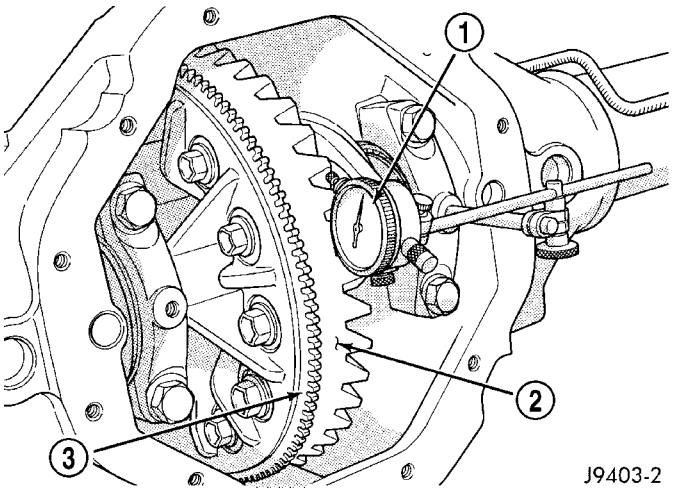

Fig. 15 RING GEAR BACKLASH

1 - DIAL INDICATOR
2 - RING GEAR
3 - EXCITER RING

NOTE: The differential bearing cups will not always immediately follow the threaded adjusters as they are moved during adjustment. To ensure accurate bearing cup responses to the adjustments:

- **Maintain the gear teeth engaged (meshed) as marked.**
- **The bearings must be seated by rapidly rotating the pinion gear a half turn back and forth.**
- **Do this five to ten times each time the threaded adjusters are adjusted.**

(1) Use Wrench C-4164 to adjust each threaded adjuster inward until the differential bearing free-play is eliminated. Allow some ring gear backlash (approximately 0.01 inch/0.25 mm) between the ring and pinion gear. Seat the bearing cups with the procedure described above.

(2) Install dial indicator (1) and position the plunger against the drive side of a ring gear tooth (2). Measure the backlash at 4 positions (90 degrees apart) around the ring gear. Locate and mark the area of minimum backlash (Fig. 15).

(3) Rotate the ring gear to the position of the least backlash. Mark the gear so that all future backlash measurements will be taken with the same gear teeth meshed.

(4) Loosen the right-side, tighten the left-side threaded adjuster. Obtain backlash of 0.003 to 0.004 inch (0.076 to 0.102 mm) with each adjuster tightened to 14 N·m (10 ft. lbs.). Seat the bearing cups with the procedure described above.

(5) Tighten the differential bearing cap bolts to 95 N·m (70 ft. lbs.).

(6) Tighten the right-side threaded adjuster to 102 N·m (75 ft. lbs.). Seat the bearing cups with the procedure described above. Continue to tighten the right-side adjuster and seat bearing cups until the torque remains constant at 102 N·m (75 ft. lbs.)

(7) Measure the ring gear backlash. The range of backlash is 0.006 to 0.008 inch (0.15 to 0.203 mm).

(8) Continue increasing the torque at the right-side threaded adjuster until the specified backlash is obtained.

NOTE: The left-side threaded adjuster torque should have approximately 102 N·m (75 ft. lbs.). If the torque is considerably less, the complete adjustment procedure must be repeated.

(9) Tighten the left-side threaded adjuster until 102 N·m (75 ft. lbs.) torque is indicated. Seat the bearing rollers with the procedure described above. Do this until the torque remains constant.

(10) Install the threaded adjuster locks and tighten the lock screws to 10 N·m (90 in. lbs.).

After the proper backlash is achieved, perform the Gear Contact procedure.

GEAR CONTACT PATTERN

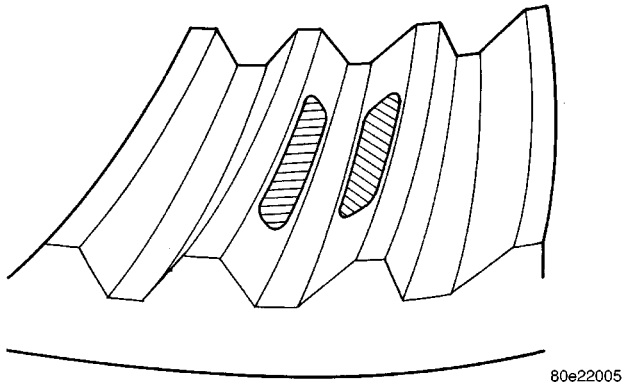

Fig. 16 GEAR CONTACT PATTERN IS CORRECT

(1) Wipe clean each tooth of the ring gear.

(2) Apply gear marking compound to all of the ring gear teeth.

(3) Verify bearing cap bolts are torque specification.

(4) Apply parking brakes lightly to create at 14 N·m (10 ft. lbs.) pinion rotating torque.

(5) Rotate the pinion/pinion yoke 4 full revolutions in each directions.

(6) Read gear tooth contact pattern.

Gear contact pattern is correct (Fig. 16). Backlash and pinion depth is correct.

Ring gear is too far away from the pinion gear, coast side toe (1) drive side heel (2) (Fig. 17). Decrease backlash by moving ring closer to the pinion gear using the adjusters.

Ring gear is too close to the pinion gear, drive side toe (1) coast side heel (2) (Fig. 18). Increase backlash

REAR AXLE - 8 1/4 (Continued)

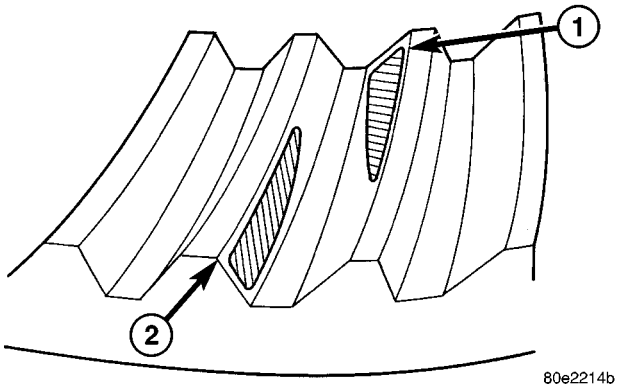

Fig. 17 RING GEAR IS TOO FAR AWAY

1 - COAST SIDE
2 - DRIVE SIDE

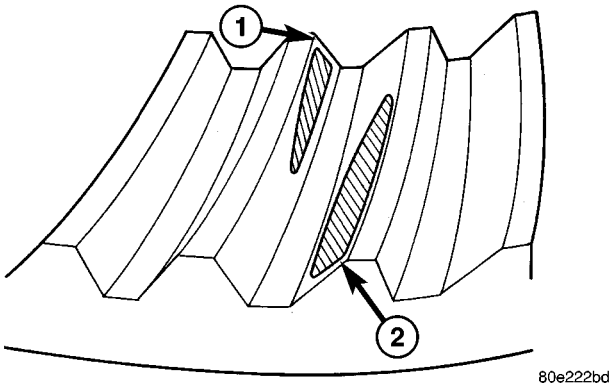

Fig. 18 RING GEAR IS TOO CLOSE

1 - DRIVE SIDE
2 - COAST SIDE

by moving ring away from the pinion gear using the adjusters.

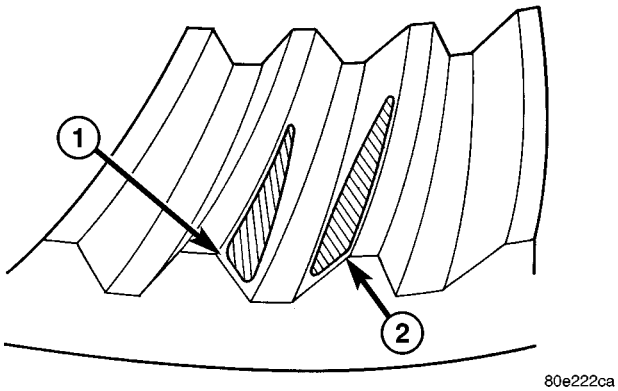

Fig. 19 RING GEAR IS TOO FAR AWAY

1 - DRIVE SIDE
2 - COAST SIDE

Ring gear is too far away from the pinion gear, drive side heel (1) coast side heel (2) (Fig. 19). Decrease backlash by moving ring gear closer to the pinion gear using the adjusters.

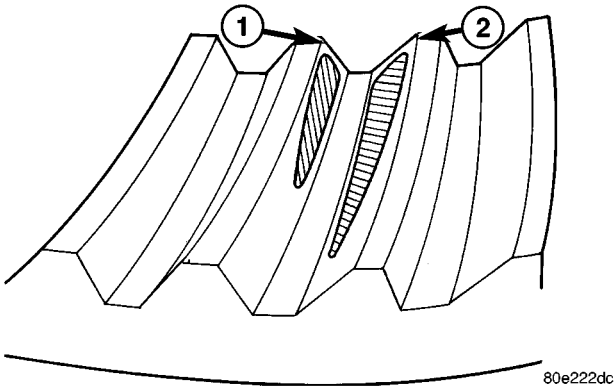

Fig. 20 RING GEAR IS TOO CLOSE

1 - DRIVE SIDE
2 - COAST SIDE

Ring gear is too close to the pinion gear, drive side toe (1) coast side toe (2) (Fig. 20). Increase backlash by moving ring gear away from the pinion gear using the adjusters.

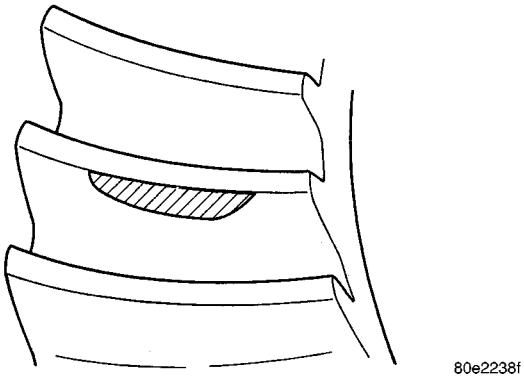

Fig. 21 PINION GEAR IS SET TOO LOW

Pinion gear is set too low. Increase pinion gear height, by increasing pinion depth shim thickness (Fig. 21).

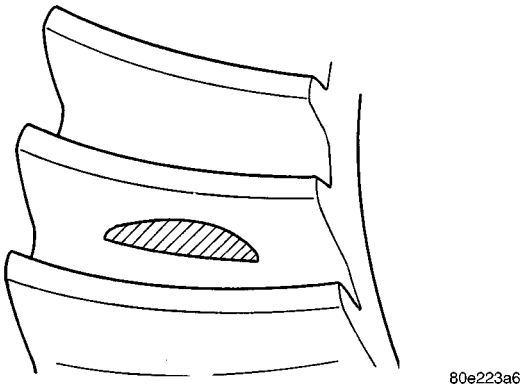

Fig. 22 PINION GEAR IS SET TOO HIGH

REAR AXLE - 8 1/4 (Continued)

Pinion gear is set too high. Decrease pinion height by decreasing the pinion depth shim thickness (Fig. 22).

SIDE GEAR CLEARANCE

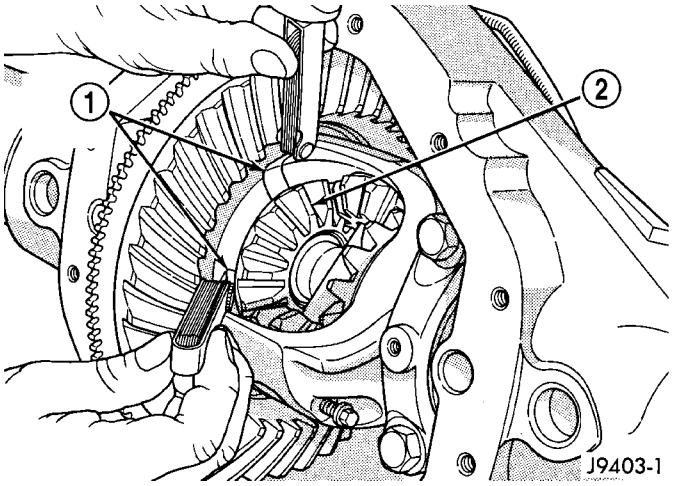

Fig. 23 SIDE GEAR CLEARANCE

1 - FEELER GAUGE
2 - SIDE GEAR

When measuring side gear clearance, check each gear independently. If it necessary to replace a side gear, replace both gears as a matched set.

(1) Install axle shafts and C-locks and pinion mate shaft.

(2) Measure each side gear clearance. Insert a matched pair of feeler gauge (1) blades between the side gear (2) and differential housing on opposite sides of the hub (Fig. 23).

SIDE GEAR CLEARANCE	0.007
THRUST WASHER THICKNESS	+ 0.033
TOTAL	0.040
	→ 0.040
REPLACEMENT WASHER THICKNESS	− 0.037
NEW SIDE GEAR CLEARANCE	0.003

J9203-31

Fig. 24 SIDE GEAR CLEARANCE EXAMPLE

(3) If side gear clearances is no more than 0.005 inch. Determine if the axle shaft is contacting the pinion mate shaft. **Do not remove the feeler gauges, inspect the axle shaft with the feeler gauge inserted behind the side gear.** If the end of the axle shaft is not contacting the pinion mate shaft, the side gear clearance is acceptable.

(4) If clearance is more than 0.005 inch (axle shaft not contacting mate shaft), record the side gear clearance. Remove the thrust washer and measure its thickness with a micrometer. Add the washer thickness to the recorded side gear clearance. The sum of gear clearance and washer thickness will determine required thickness of replacement thrust washer (Fig. 24).

In some cases, the end of the axle shaft will move and contact the mate shaft when the feeler gauge is inserted. The C-lock is preventing the side gear from sliding on the axle shaft.

(5) If there is no side gear clearance, remove the C-lock from the axle shaft. Use a micrometer to measure the thrust washer thickness. Record the thickness and re-install the thrust washer. Assemble the differential case without the C-lock installed and re-measure the side gear clearance.

(6) Compare both clearance measurements. If the difference is less than 0.012 inch (0.305 mm), add clearance recorded when the C-lock was installed to thrust washer thickness measured. The sum will determine the required thickness of the replacement thrust washer.

(7) If clearance is 0.012 inch (0.305 mm) or greater, both side gears must be replaced (matched set) and the clearance measurements repeated.

(8) If clearance (above) continues to be 0.012 inch (0.305 mm) or greater, the case must be replaced.

REAR AXLE - 8 1/4 (Continued)

SPECIFICATIONS

AXLE SPECIFICATIONS

DESCRIPTION	SPECIFICATION
Axle Ratio	3.55, 3.73, 4.10
Differential Case Flange Runout	0.076 mm (0.003 in.)
Differential Case Clearance	0.12 mm (0.005 in.)
Ring Gear Diameter	209.5 mm (8.25 in.)
Ring Gear Backlash	0.12-0.20 mm (0.005-0.008 in.)
Ring Gear Runout	0.12 mm (0.005 in.)
Pinion Bearing Preload - Original Bearings	1-2 N·m (10-20 in. lbs.)
Pinion Bearing Preload - New Bearings	1-3.4 N·m (10-30 in. lbs.)

TORQUE SPECIFICATIONS

DESCRIPTION	N·m	Ft. Lbs.	In. Lbs.
Differential Cover Bolts	41	30	-
Bearing Cap Bolts	136	100	-
Ring Gear Bolts	95	70	-
Pinion Nut Minimum	285	210	-
Pinion Mate Shaft Screw	16.25	12	-
Axle Damper	61	45	-

SPECIAL TOOLS

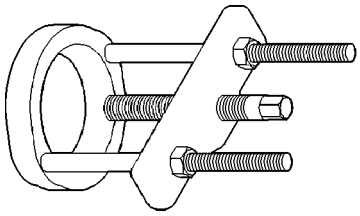

PULLER/PRESS C-293-PA

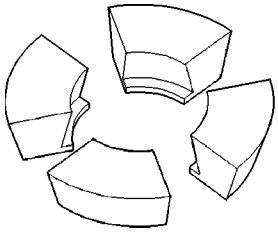

ADAPTERS C-293-48

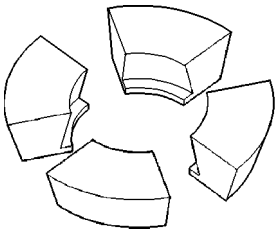

ADAPTERS C-293-47

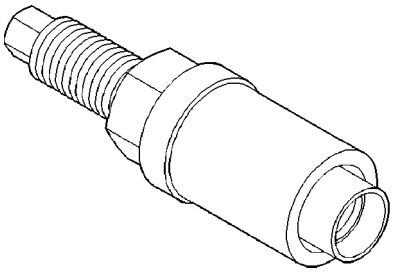

INSTALLER C-3718

REAR AXLE - 8 1/4 (Continued)

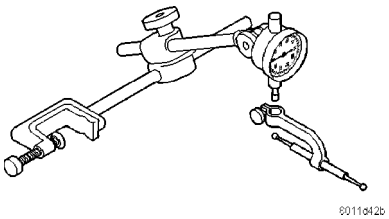

DIAL INDICATOR C-3339

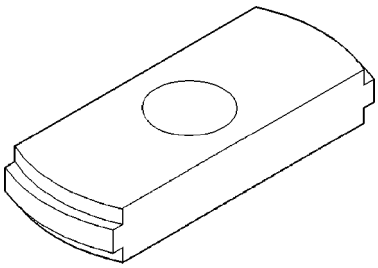

REMOVER C-4307

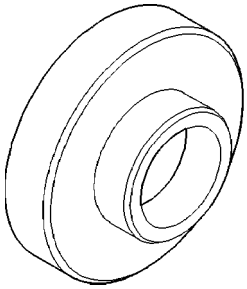

INSTALLER C-4076-B

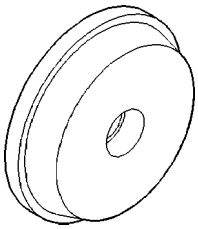

INSTALLER C-4308

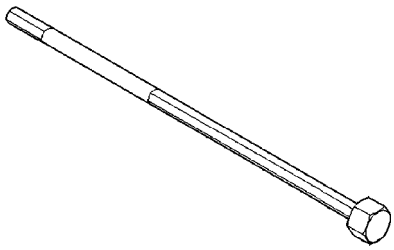

ADJUSTMENT WRENCH C-4164

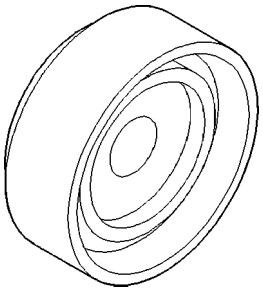

INSTALLER C-4340

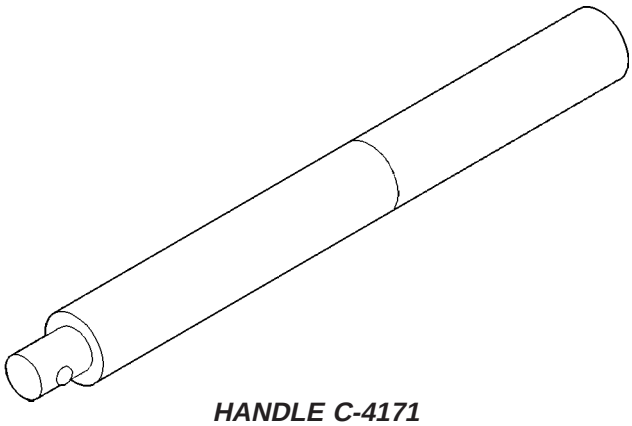

HANDLE C-4171

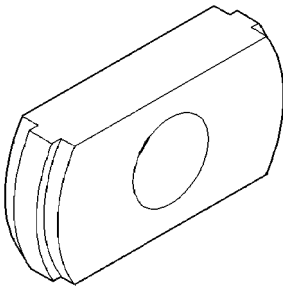

REMOVER C-4345

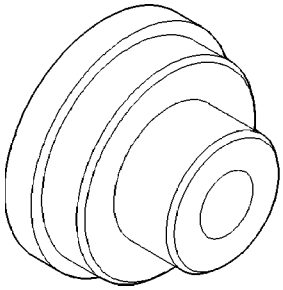

INSTALLER C-4198

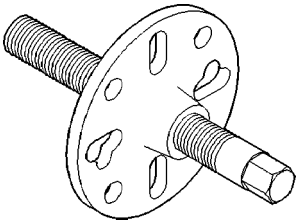

PULLER C-452

REAR AXLE - 8 1/4 (Continued)

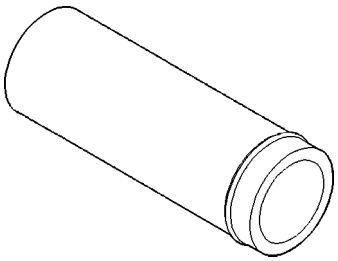

HANDLE C-4735

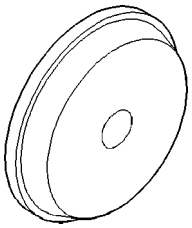

INSTALLER D-130

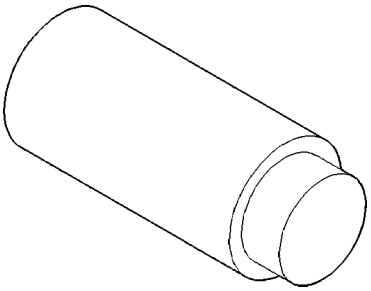

ADAPTER PLUG SP-3289

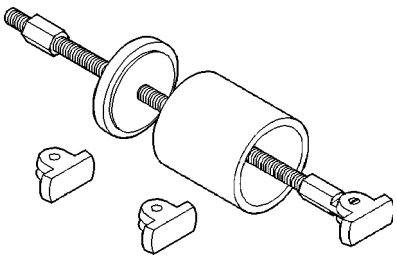

REMOVER 6310

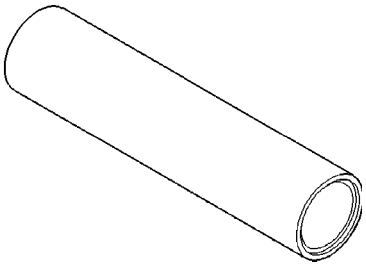

INSTALLER 6448

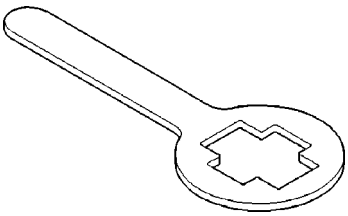

HOLDER 6719A

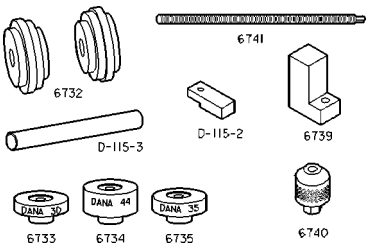

PINION GAUGE SET 6774

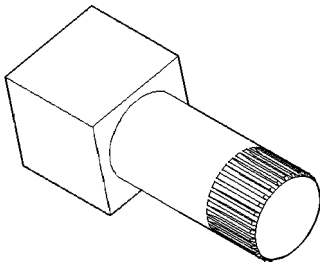

FIXTURE 8138

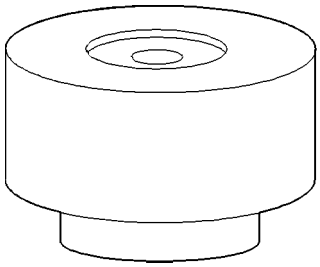

PINION BLOCK 8540

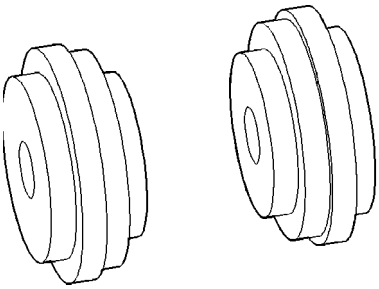

ARBOR DISCS 8541

COVER-DIFFERENTIAL

REMOVAL

(1) With vehicle in neutral, position vehicle on hoist.
(2) Remove drain plug.
(3) Remove cover bolts.
(4) Remove cover and drain lubricant.

INSTALLATION

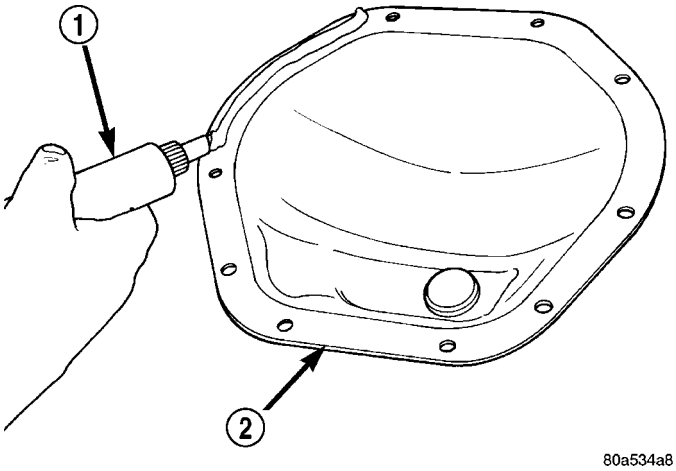

Fig. 25 COVER SEALANT

1 - SEALANT
2 - DIFFERENTIAL COVER

(1) Apply a bead of orange Mopar Axle RTV sealant (1) or equivalent to the housing cover (2) (Fig. 25).

CAUTION: If cover is not installed within 3 to 5 minutes, the cover must be cleaned and new RTV applied. Failure to follow these instructions will cause a leak.

CAUTION: If housing cover is not installed within 3 to 5 minutes, the cover must be cleaned and new RTV applied. Failure to heed caution may result in damage.

(2) Install cover and identification tag. Tighten cover bolts in a criss-cross pattern to 41 N·m (30 ft. lbs.).
(3) Fill differential to specifications.
(4) Install fill plug.

SHAFT-AXLE

REMOVAL

(1) With vehicle in neutral, position vehicle on hoist.

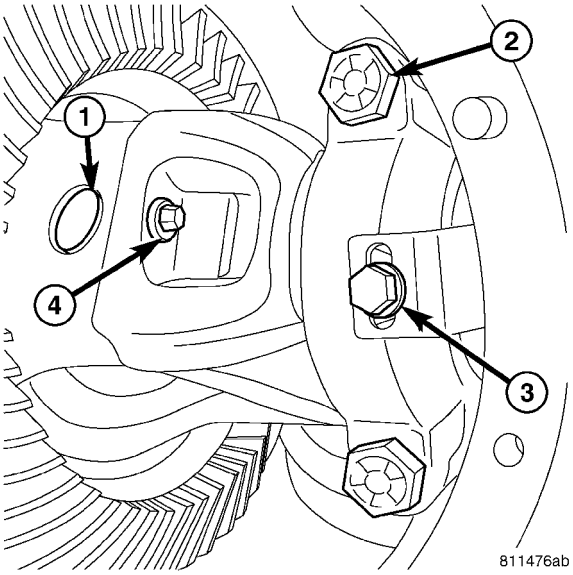

Fig. 26 LOCK SCREW

1 - PINION MATE SHAFT
2 - BEARING CAP BOLT
3 - ADJUSTER LOCK BOLT
4 - LOCK SCREW

(2) Remove differential housing cover and drain lubricant.
(3) Rotate differential case so pinion mate shaft (1) lock screw (4) is accessible (Fig. 26). Remove lock screw and pinion mate shaft from differential case.

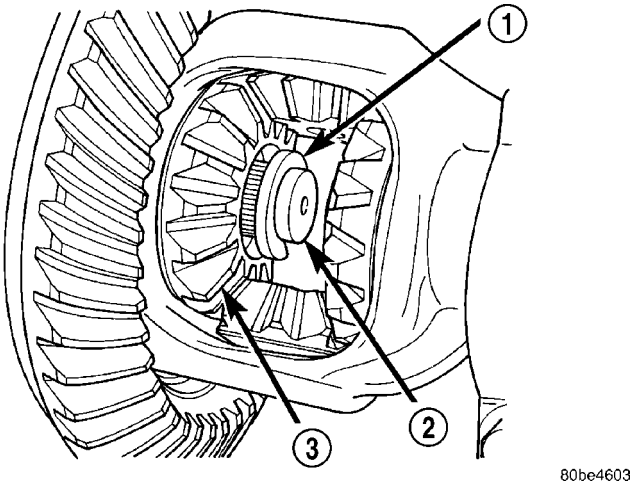

Fig. 27 AXLE SHAFT C-LOCK

1 - C-LOCK
2 - AXLE SHAFT
3 - SIDE GEAR

(4) Push axle shaft (Fig. 27) inward and remove axle shaft C-lock (1) from the axle shaft (2).
(5) Remove axle shaft from side gear (3) and axle tube.

SHAFT-AXLE (Continued)

INSTALLATION

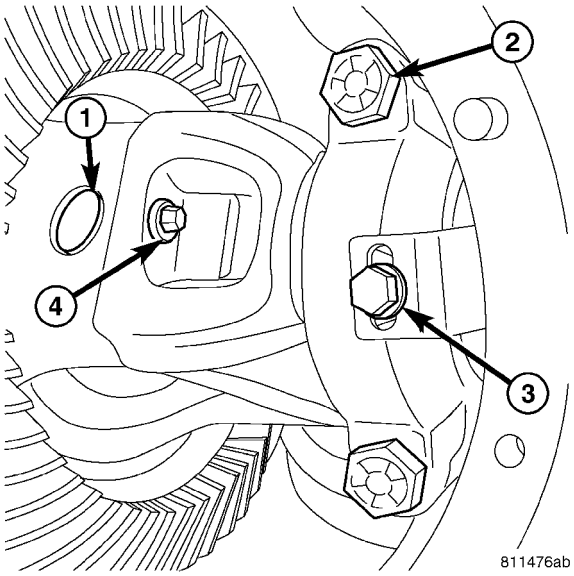

Fig. 28 LOCK SCREW

1 - PINION MATE SHAFT
2 - BEARING CAP BOLT
3 - ADJUSTER LOCK BOLT
4 - LOCK SCREW

(1) Lubricate bearing bore and seal lip with gear lubricant.

(2) Install axle shaft through seal, bearing and engage into side gear splines.

(3) Install C-lock in axle shaft end, then push axle shaft outward to seat C-lock in side gear.

(4) Install pinion mate shaft (1) into differential case and through thrust washers and differential pinions (Fig. 28).

(5) Align hole in shaft with hole in the differential case and install lock screw (4) with Loctite® on the threads. Tighten lock screw to 11 N·m (8 ft. lbs.).

(6) Install differential cover.

(7) Install rear brake componants.

SEAL-AXLE SHAFT

REMOVAL

(1) Remove axle shaft.

(2) Remove axle shaft seal (1) from axle tube (2) with a seal pick (Fig. 29).

INSTALLATION

(1) Remove any old sealer/burrs from axle tube.

(2) Coat **new** seal lip with axle lubricant and install seal with Installer C-4198 (1) and Handle C-4171 (1) (Fig. 30).

(3) Install axle shaft.

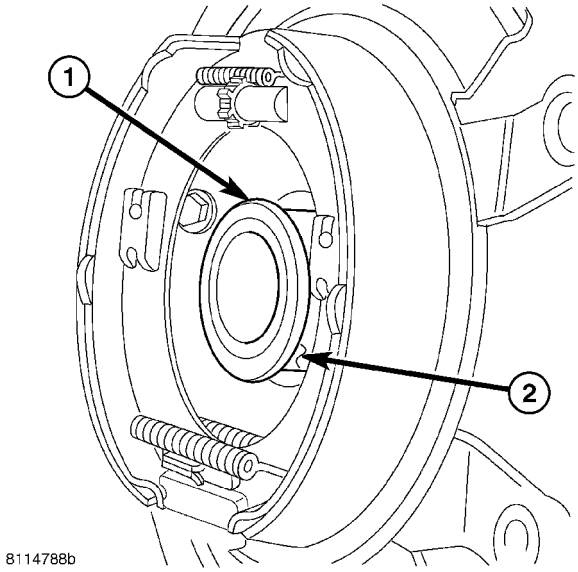

Fig. 29 AXLE SHAFT SEAL

1 - SEAL
2 - AXLE TUBE

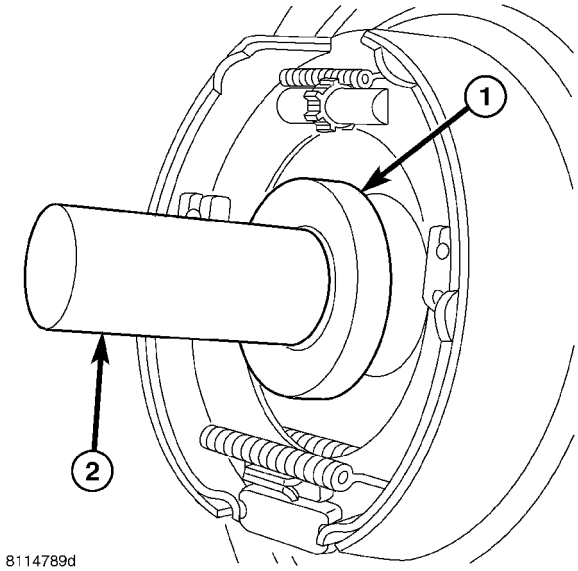

Fig. 30 SEAL INSTALLER

1 - INSTALLER
2 - HANDLE

BEARING-AXLE

REMOVAL

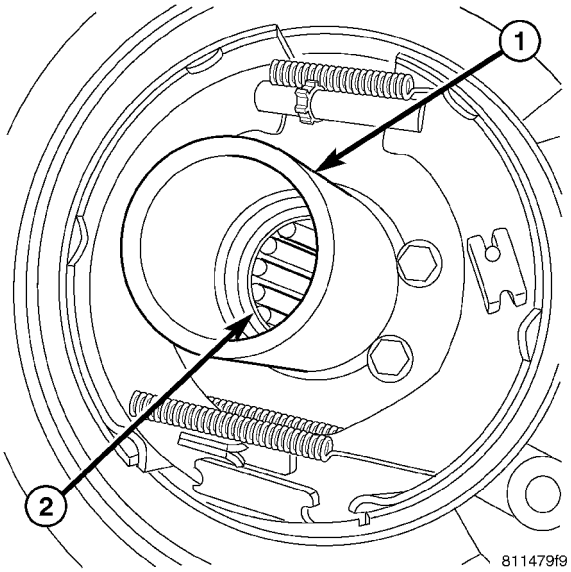

Fig. 31 BEARING RECEIVER

1 - RECEIVER
2 - AXLE BEARING

NOTE: Remove bearing with Bearing Remover 6310 and Foot 6310-9.

(1) Remove axle shaft.
(2) Remove axle seal with seal pick.
(3) Position bearing (2) receiver (1) on axle tube (Fig. 31).

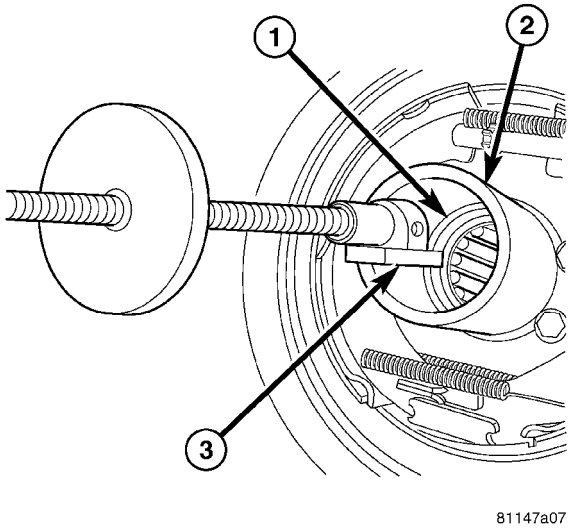

Fig. 32 BEARING REMOVER FOOT

1 - BEARING
2 - RECEIVER
3 - FOOT

(4) Insert bearing remover foot (3) through receiver (2) and bearing (1) (Fig. 32).

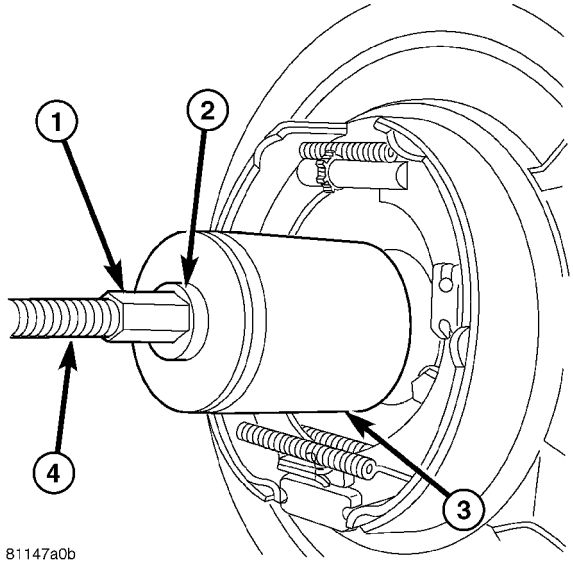

Fig. 33 BEARING REMOVER ASSEMBLY

1 - NUT
2 - BEARING
3 - RECEIVER
4 - SHAFT

(5) Tighten remove nut (1) on the shaft (4) to pull bearing into the receiver (3) (Fig. 33).

INSTALLATION

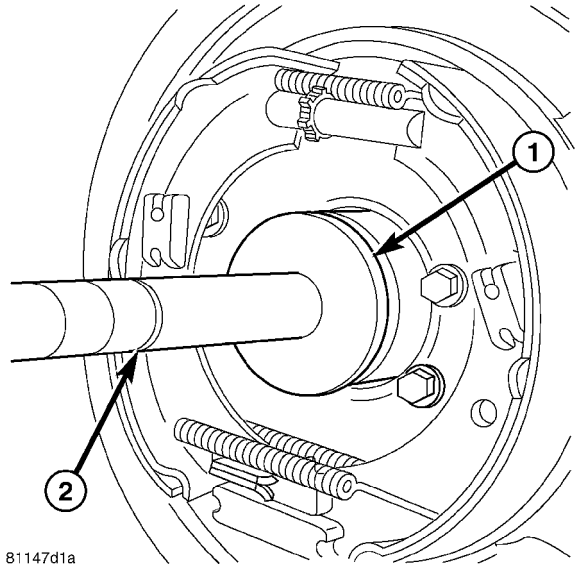

Fig. 34 BEARING INSTALLER

1 - INSTALLER
2 - HANDLE

(1) Remove any old sealer/burrs from axle tube.

BEARING-AXLE (Continued)

(2) Install axle shaft bearing with Installer C-4198 (1) and Handle C-4171 (2) (Fig. 34). Drive bearing in until tool contacts the axle tube.

NOTE: Bearing is installed with the bearing part number against the installer.

(3) Coat **new** axle seal lip with axle lubricant. Install seal with Installer C-4198 and Handle C-4171.

(4) Install axle shaft.

SEAL-PINION

REMOVAL

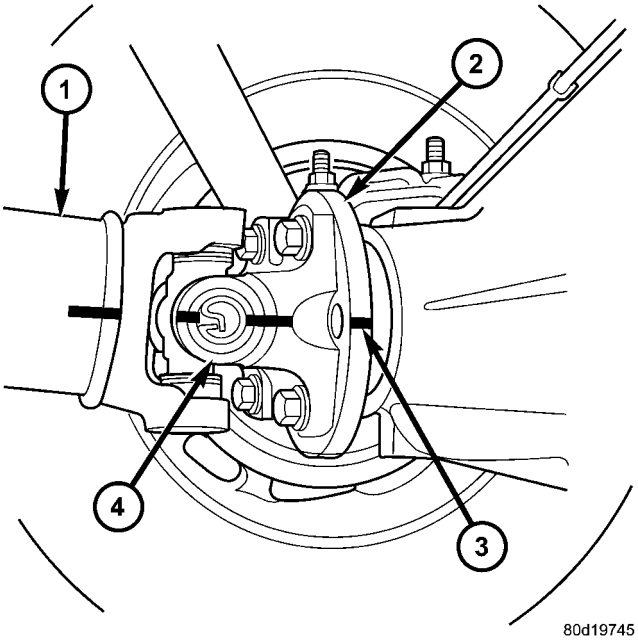

Fig. 35 COMPANION FLANGE

1 - PROPELLER SHAFT
2 - PINION COMPANION FLANGE
3 - REFERENCE MARK
4 - PROPELLER SHAFT COMPANION FLANGE

(1) With vehicle in neutral, position vehicle on hoist.

(2) Mark a reference line (3) across the axle companion flange (2) and propeller shaft flange yoke (4) (Fig. 35).

(3) Remove companion flange bolts and remove propeller shaft

(4) Remove wheel and tire assemblies.

(5) Remove brake calipers and rotors to prevent any drag.

(6) Rotate companion flange three or four times and verify flange rotates smoothly.

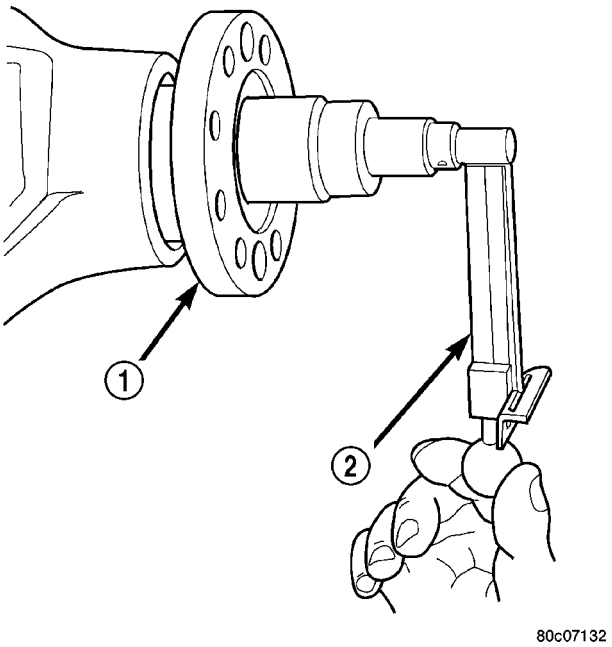

Fig. 36 PINION ROTATION TORQUE

1 - COMPANION FLANGE
2 - INCH POUND TORQUE WRENCH

(7) Measure rotating torque of the pinion (1) with a inch pound torque wrench (2) and record reading for installation reference (Fig. 36).

(8) Install bolts into two of the threaded holes in the companion flange 180° apart.

(9) Position Holder 6719 against the companion flange and install a bolt and washer into one of the remaining threaded holes. Tighten the bolts so the Holder 6719 is held to the flange.

(10) Remove the pinion nut and washer.

(11) Remove companion flange (1) with Remover C-452 (2) (Fig. 37).

(12) Remove pinion seal with a seal pick.

INSTALLATION

(1) Apply a light coating of gear lubricant on the lip of pinion seal.

(2) Install **new** pinion seal with Installer C-4076-B (3) and Handle C-4735 (1) (Fig. 38).

(3) Install companion flange on the end of the shaft with the reference marks aligned.

(4) Install bolts into two of the threaded holes in the companion flange 180° apart.

(5) Position Holder 6719 against the companion flange and install a bolt and washer into one of the remaining threaded holes. Tighten the bolts so Holder 6719 is held to the flange.

(6) Install companion flange on pinion shaft with Installer C-3718 and Holder 6719.

(7) Install the pinion washer and a **new** pinion nut. The convex side of the washer must face outward.

SEAL-PINION (Continued)

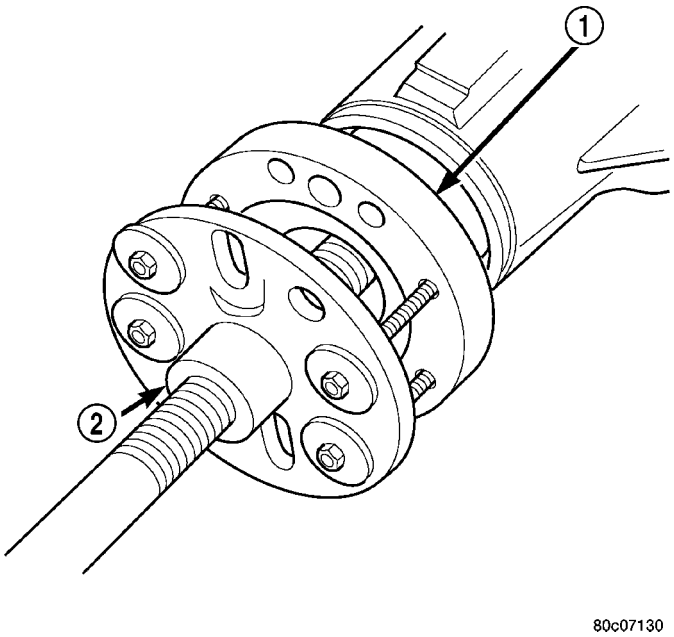

Fig. 37 COMPANION FLANGE PULLER

1 - COMPANION FLANGE
2 - PULLER

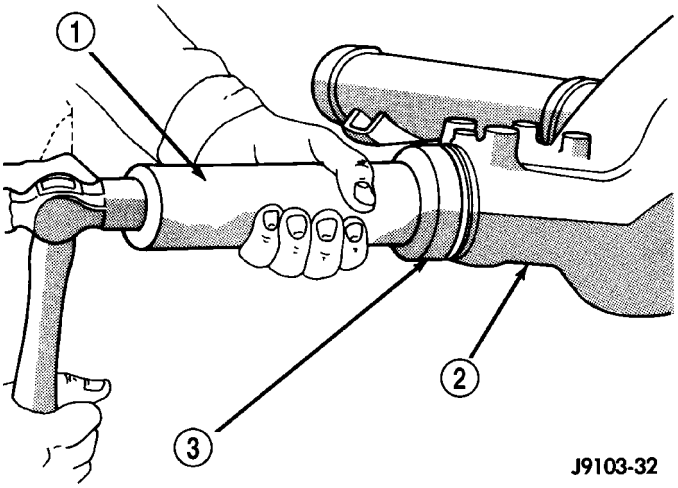

Fig. 38 PINION SEAL INSTALLER

1 - HANDLE
2 - DIFFERENTIAL HOUSING
3 - INSTALLER

CAUTION: Do not exceed the minimum tightening torque when installing the companion flange retaining nut at this point. Failure to heed caution may result in damage.

(8) Hold companion flange with Holder 6719 (2) and with a torque wrench (3) tighten pinion nut to 285 N·m (210 ft. lbs.) (Fig. 39). Rotate pinion several revolutions to ensure the bearing rollers are seated.

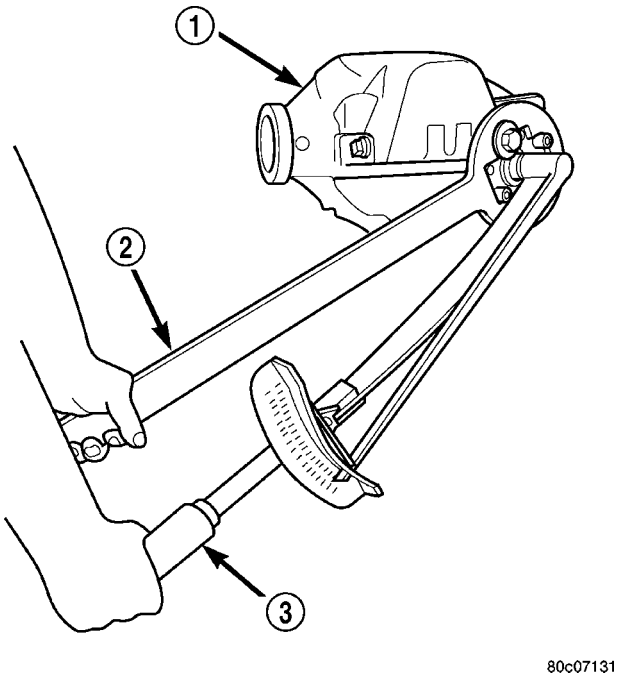

Fig. 39 TIGHTENING PINION NUT

1 - DIFFERENTIAL HOUSING
2 - COMPANION FLANGE HOLDER
3 - TORQUE WRENCH

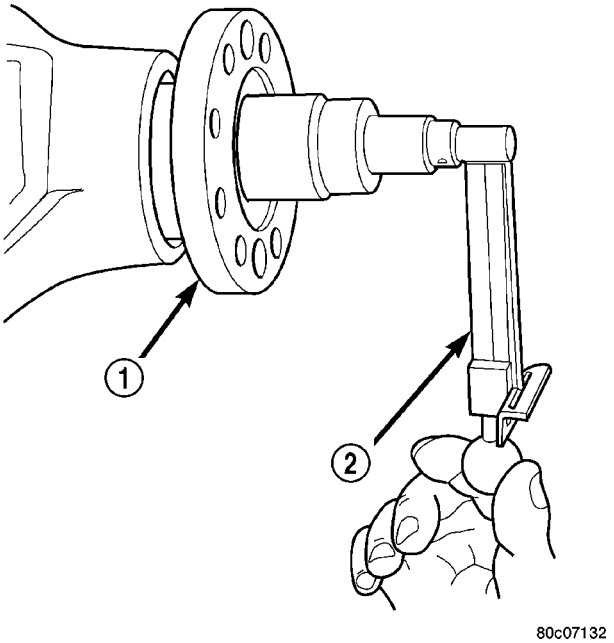

Fig. 40 PINION ROTATION TORQUE

1 - COMPANION FLANGE
2 - INCH POUND TORQUE WRENCH

(9) Rotate pinion (1) with an inch pound torque wrench (2) (Fig. 40). Rotating torque should be equal to the reading recorded during removal plus an additional 0.56 N·m (5 in. lbs.).

SEAL-PINION (Continued)

CAUTION: Never loosen pinion nut to decrease pinion bearing rotating torque and never exceed specified preload torque. Failure to follow these instructions will result in damage.

(10) If rotating torque is low use Holder 6719 to hold the companion flange and tighten pinion nut in 6.8 N·m (5 ft. lbs.) increments until proper rotating torque is achieved.

NOTE: The seal replacement is unacceptable if final pinion nut torque is less than 285 N·m (210 ft. lbs.).

NOTE: The bearing rotating torque should be constant during a complete revolution of the pinion. If the rotating torque varies, this indicates a binding condition.

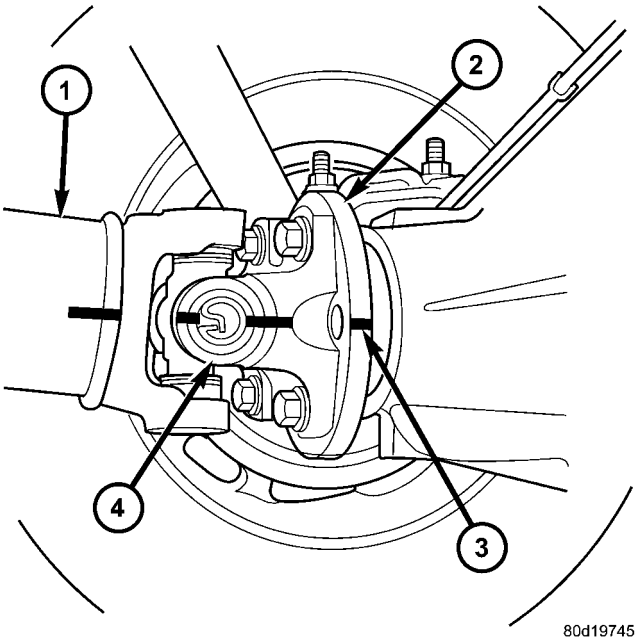

Fig. 41 COMPANION FLANGE

1 - PROPELLER SHAFT
2 - PINION COMPANION FLANGE
3 - REFERENCE MARK
4 - PROPELLER SHAFT COMPANION FLANGE

(11) Install propeller shaft (1) with installation reference marks (3) aligned (Fig. 41).

(12) Tighten companion flange bolts to 115 N·m (85 ft. lbs.).

(13) Install rear brake components.

DIFFERENTIAL

REMOVAL

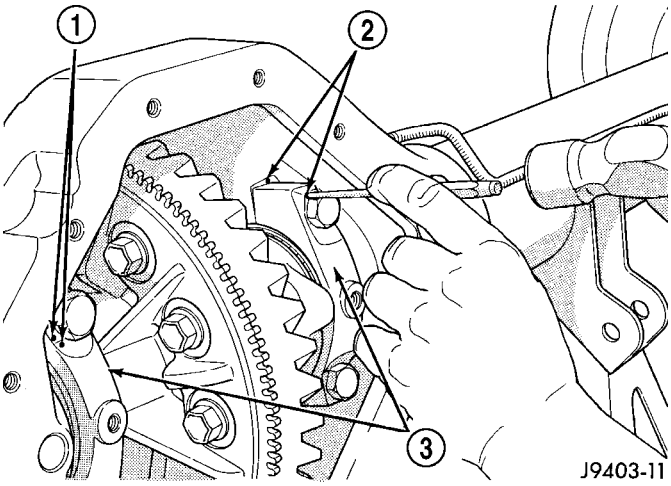

Fig. 42 REFERENCE MARKS

1 - REFERENCE MARKS
2 - REFERENCE MARK
3 - BEARING CAPS

(1) Remove differential fill plug.

(2) Remove differential cover and drain lubricant.

(3) Remove axle shaft C-locks and axle shafts.

(4) Remove ABS sensor from housing.

(5) Mark (1) (2) differential housing and bearing caps (3) for installation reference (Fig. 42).

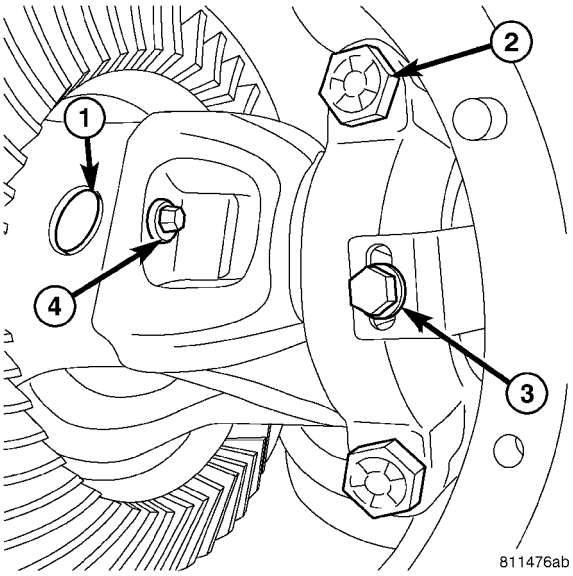

Fig. 43 LOCK SCREW

1 - PINION MATE SHAFT
2 - BEARING CAP BOLT
3 - ADJUSTER LOCK BOLT
4 - LOCK SCREW

(6) Remove bearing adjuster lock bolt (3) from bearing caps.

DIFFERENTIAL (Continued)

(7) Loosen differential bearing cap bolts (2) (Fig. 43).

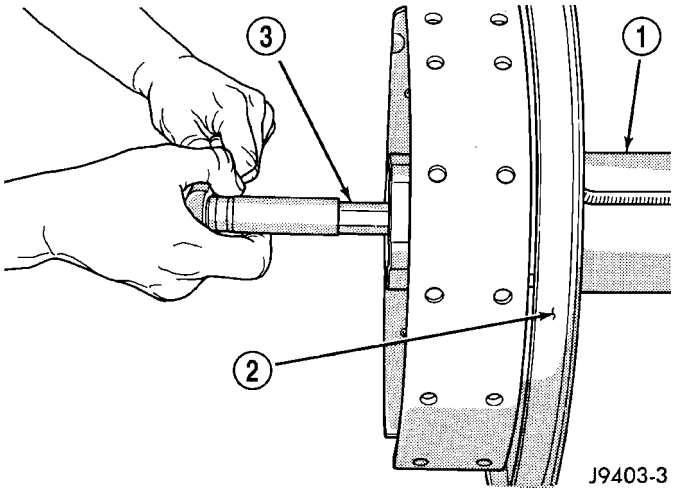

Fig. 44 THREADED ADJUSTER TOOL

1 - AXLE TUBE
2 - BACKING PLATE
3 - THREAD ADJUSTER WRENCH

(8) Loosen differential bearing adjusters through the axle tubes (1) with Wrench C-4164 (3) (Fig. 44).

(9) Hold differential case while removing bearing caps and adjusters.

(10) Remove differential case and tag differential bearing cups and adjusters to indicate location.

(11) Clean housing cavity with flushing oil, light engine oil or a lint free cloth.

DISASSEMBLY

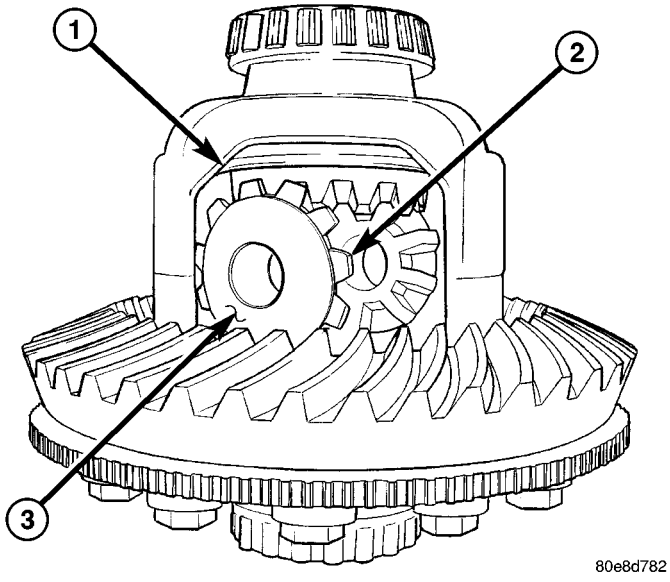

Fig. 45 FRIST PINION GEAR

1 - DIFFERNTIAL CASE WINDOW
2 - PINION GEAR
3 - THRUST WASHER

(1) Rotate one pinion gear (2) with thrust washer (3) to the differential window (1) and remove gear and thrust washer (Fig. 45).

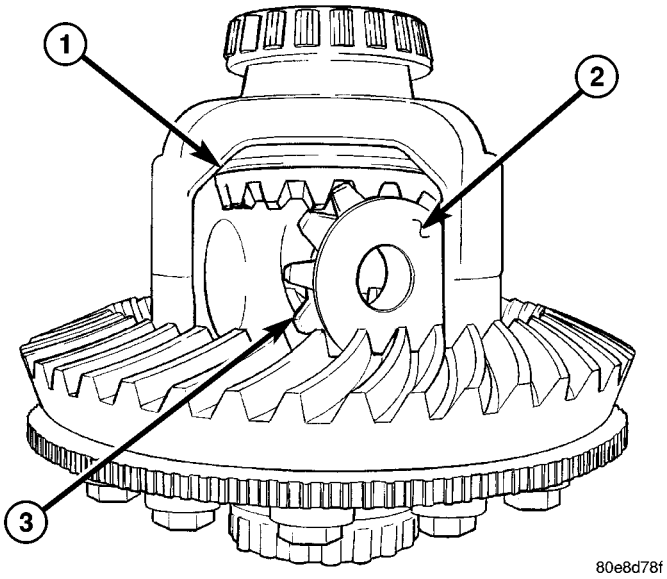

Fig. 46 SECOND PINION GEAR

1 - DIFFERENTIAL WINDOW
2 - THRUST WASHER
3 - PINION GEAR

(2) Rotate remaining pinion gear (3) with thrust washer (2) to the differential window (1) and remove gear and washer (Fig. 46).

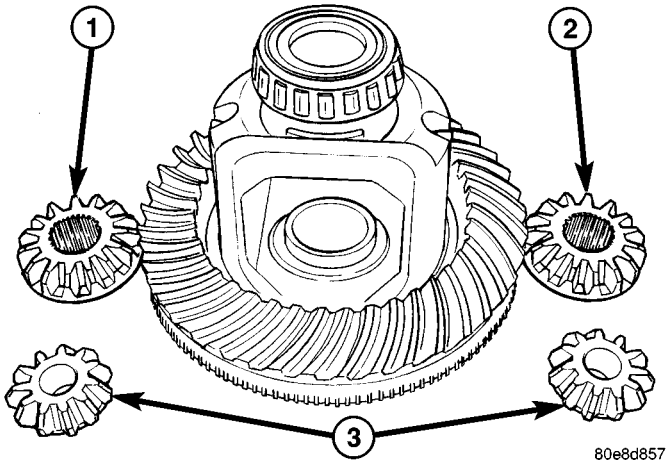

Fig. 47 SIDE GEARS

1 - SIDE GEAR
2 - SIDE GEAR
3 - PINION GEARS

(3) Remove differential side gears (1) (2) and thrust washers (Fig. 47).

DIFFERENTIAL (Continued)

ASSEMBLY

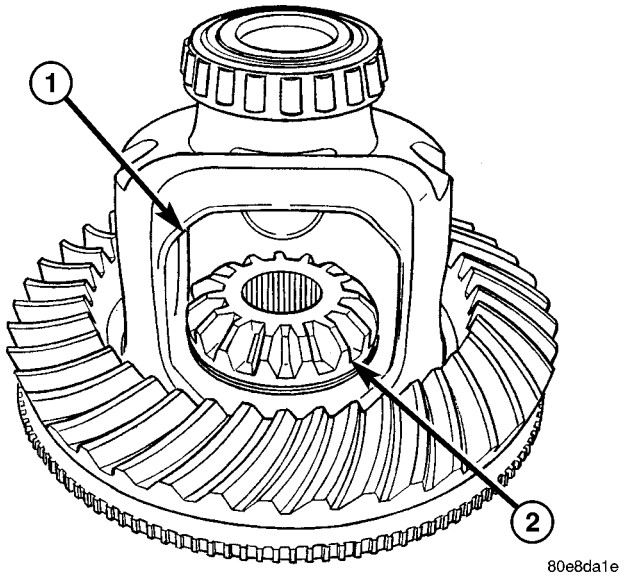

Fig. 48 SIDE GEAR

1 - DIFFERENTIAL WINDOW
2 - SIDE GEAR

NOTE: If same gears and thrust washers are being used, install them into their original locations.

(1) Lubricate all differential components with axle lubricant.

(2) Install differential side gears (2) and thrust washers through differential window (1) (Fig. 48).

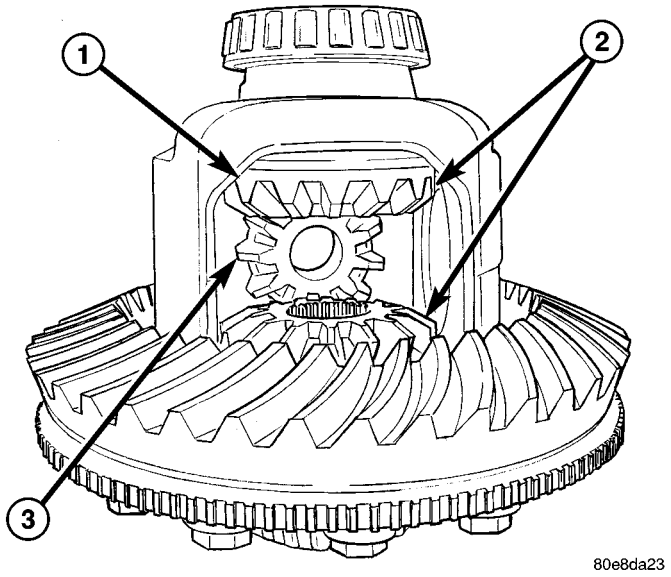

Fig. 49 PINION GEAR

1 - DIFFERENTIAL WINDOW
2 - SIDE GEARS
3 - PINION GEAR

(3) Install first pinion gear (3) with thrust washer into differential window (1) and side gears (2) (Fig. 49). Rotate pinion gear into the case.

(4) Install remaining pinion gear and thrust washer. Rotate gears to align hole in the pinion gears with hole in the differential case.

(5) Slide pinion shaft into the case and through the pinion gears to align the gears.

INSTALLATION

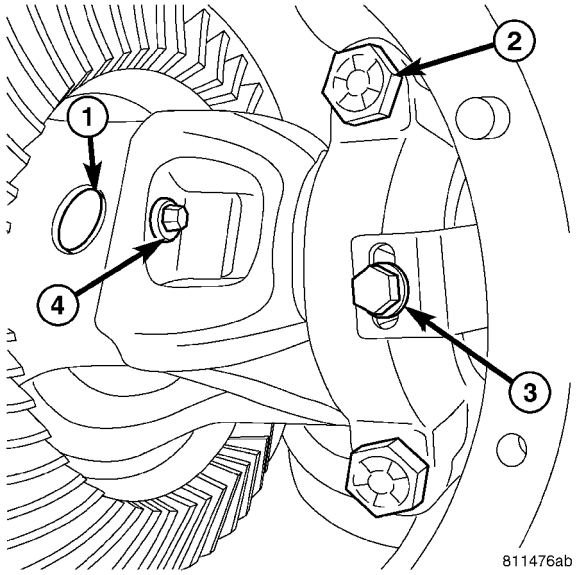

Fig. 50 LOCK SCREW

1 - PINION MATE SHAFT
2 - BEARING CAP BOLT
3 - ADJUSTER LOCK BOLT
4 - LOCK SCREW

(1) Apply a coat of hypoid gear lubricant to differential bearings, bearing cups and threaded adjusters.

NOTE: Grease can be used to keep the adjusters in position.

(2) Install differential assembly into the housing.

(3) Install differential bearing caps in their original locations.

(4) Install bearing cap bolts (2) and tighten upper bolts to 14 N·m (10 ft. lbs.). Tighten lower bolts finger-tight until bolt head is seated (Fig. 50)

(5) Perform differential bearing preload and adjustment procedure.

(6) Tighten bearing cap bolts in a criss-cross pattern to 95 N·m (70 ft. lbs.).

(7) Install adjuster locks (3) on bearing caps and tighten to 10 N·m (90 in. lbs.).

(8) Install axle shafts.

(9) Install differential cover.

DIFFERENTIAL-TRAC-LOK

OPERATION

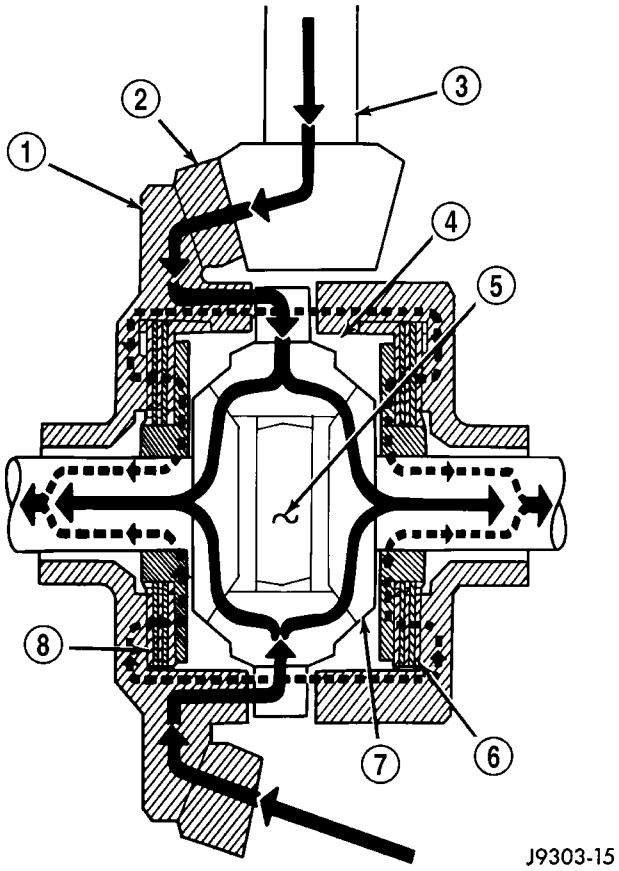

Fig. 51 TRAC-LOK LIMITED SLIP DIFFERENTIAL

1 - CASE
2 - RING GEAR
3 - DRIVE PINION
4 - PINION GEAR
5 - MATE SHAFT
6 - CLUTCH PACK
7 - SIDE GEAR
8 - CLUTCH PACK

This differentials clutches are engaged by two concurrent forces. The first being the preload force exerted through Belleville spring washers within the clutch packs (6). The second is the separating forces generated by the side gears (7) as torque is applied through the ring gear (2) (Fig. 51).

This design provides the differential action needed for turning corners and for driving straight ahead during periods of unequal traction. When one wheel looses traction, the clutch packs transfer additional torque to the wheel having the most traction. This differential resist wheel spin on bumpy roads and provide more pulling power when one wheel looses traction. Pulling power is provided continuously until both wheels loose traction. If both wheels slip due to unequal traction, Trac-lok™ operation is normal. In extreme cases of differences of traction, the wheel with the least traction may spin.

DIAGNOSIS AND TESTING

DIFFERENTIAL-TRAC-LOK

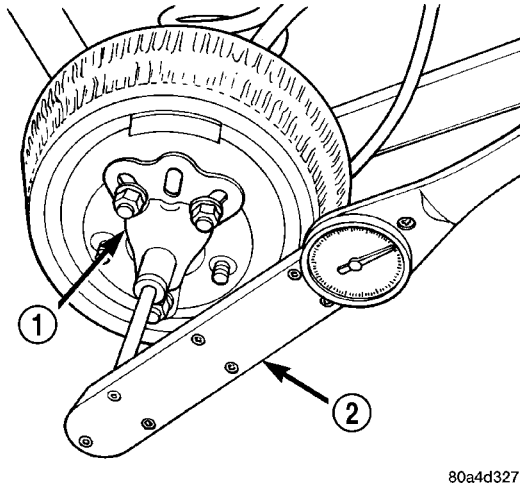

Fig. 52 Trac-lok™ Test-Typical

1 - SPECIAL TOOL WITH BOLT IN CENTER HOLE
2 - TORQUE WRENCH

The most common problem is a chatter noise when turning corners. Before removing the unit for repair, drain, flush and refill the axle with the specified lubricant. A container of Mopar Trac-lok® Lubricant (friction modifier) should be added after repair service or during a lubricant change.

After changing the lubricant, drive the vehicle and make 10 to 12 slow, figure-eight turns. This maneuver will pump lubricant through the clutches. This will correct the condition in most instances. If the chatter persists, clutch damage could have occurred.

DIFFERENTIAL TEST

The differential can be tested without removing the differential case by measuring rotating torque. Make sure brakes are not dragging during this measurement.

(1) Place blocks in front and rear of both front wheels.

(2) Raise one rear wheel until it is completely off the ground.

(3) Engine off, transmission in neutral, and parking brake off.

(4) Remove wheel and bolt Special Tool 6790 (1) (Fig. 52) or equivalent tool to studs.

(5) Use torque wrench (2) on special tool to rotate wheel and read rotating torque.

(6) If rotating torque is less than 41 N·m (56 ft. lbs.) or more than 271 N·m (200 ft. lbs.) on either wheel the unit must be replaced.

BEARING-DIFFERENTIAL CASE

REMOVAL

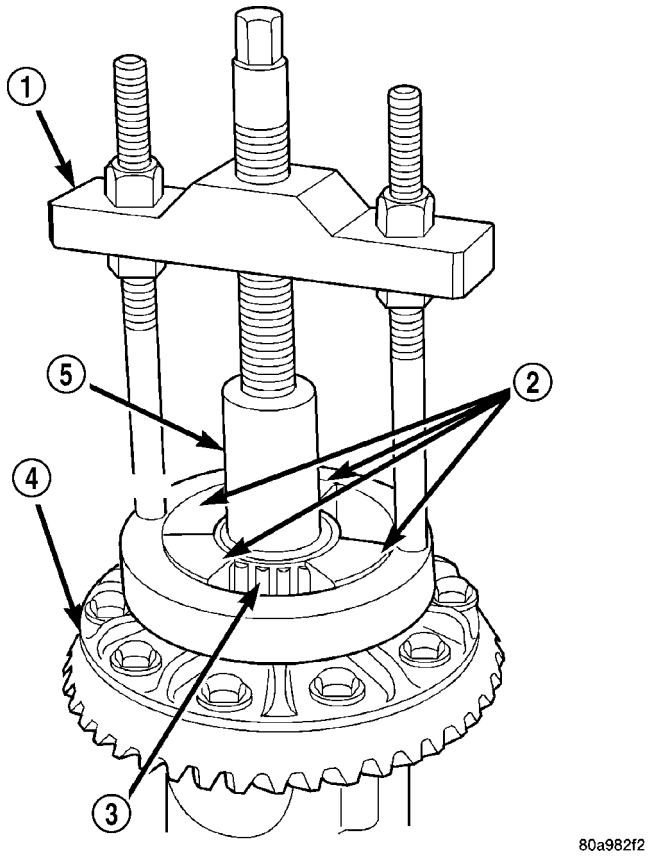

Fig. 53 DIFFERENTIAL BEARING PULLER

1 - PULLER
2 - ADAPTERS
3 - BEARING
4 - DIFFERENTIAL
5 - PLUG

(1) Remove differential case from axle.

(2) Remove differential bearings (3) from the case with Puller/Press C-293-PA (1) and Adapters C-293-48 (2) and Plug SP-3289 (5) (Fig. 53).

INSTALLATION

CAUTION: If equipped with Vari-lok®, plenum must be seated against the differential case, prior to installing the ring gear side differential bearing. Failure to follow these instructions will damage the Vari-lok® plenum.

(1) Install differential (2) bearings (3) with Installer C-4340 (4) and Handle C-4171(1) (Fig. 54).

(2) Install differential case in axle.

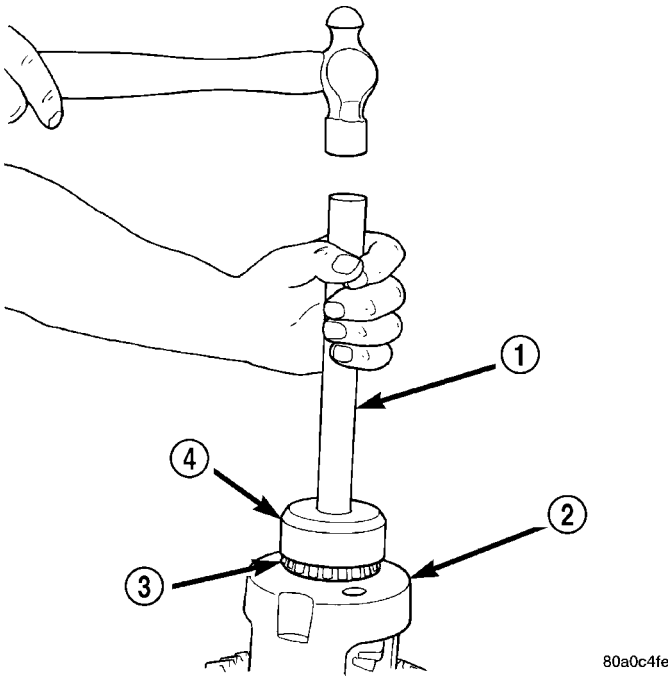

Fig. 54 Differential Bearing Installer

1 - HANDLE
2 - DIFFERENTIAL
3 - BEARING
4 - INSTALLER

GEAR-PINION/RING

REMOVAL

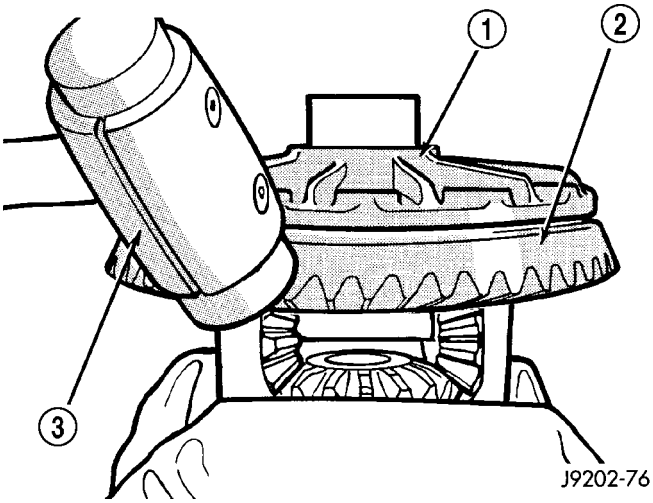

Fig. 55 RING GEAR

1 - CASE
2 - RING GEAR
3 - HAMMER

NOTE: The ring and pinion gears are serviced in a matched set. Never replace one gear without replacing the other matched gear.

(1) Remove differential from axle housing.

GEAR-PINION/RING (Continued)

(2) Place differential case (1) in a vise with soft metal jaw.

(3) Remove bolts holding ring gear (2) to differential case.

(4) Drive ring gear from differential case with a dead-blow hammer (3) (Fig. 55).

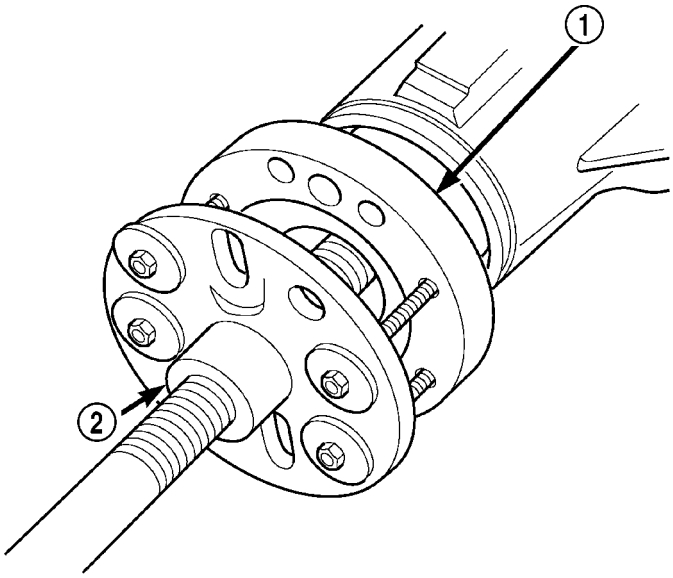

Fig. 56 COMPANION FLANGE PULLER

1 - COMPANION FLANGE
2 - PULLER

(5) Hold flange yoke (1) with Holder 6719A and remove flange nut and washer.

(6) Remove flange yoke from pinion shaft with Remover C-452 (2) (Fig. 56).

(7) Remove pinion from the housing with dead-blow hammer (1) (Fig. 57).

(8) Remove pinion shaft seal with a seal pick.

(9) Remove oil slinger, if equipped, and front pinion bearing.

(10) Remove front pinion bearing cup with Remover C-4345 (1) and Handle C-4171 (2) (Fig. 58).

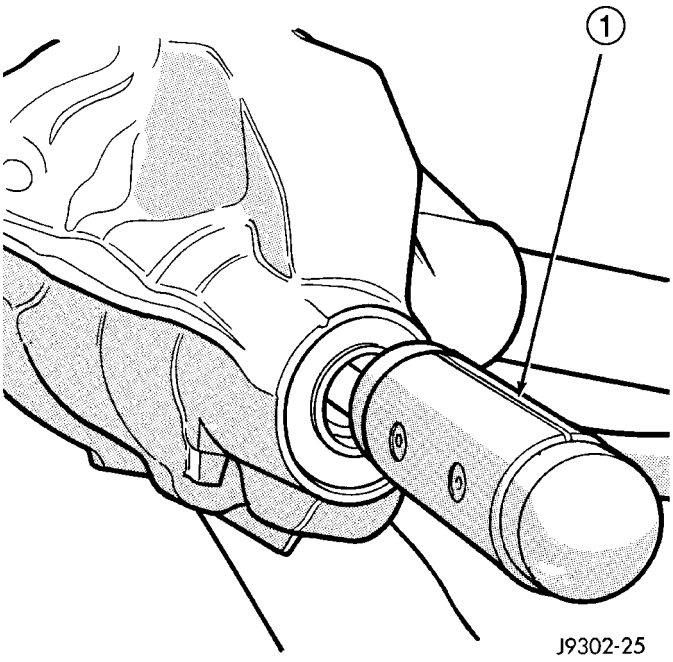

Fig. 57 PINION GEAR

1 - HAMMER

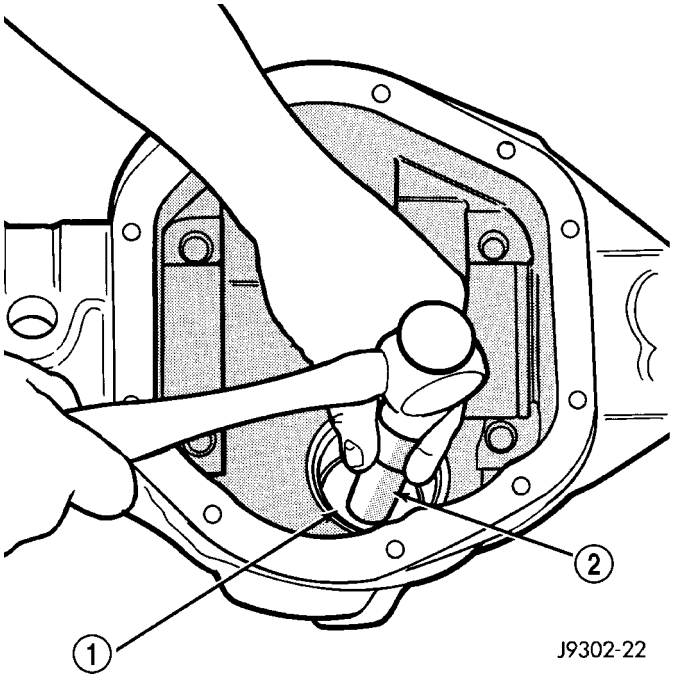

Fig. 58 FRONT PINION BEARING CUP

1 - REMOVER
2 - HANDLE

GEAR-PINION/RING (Continued)

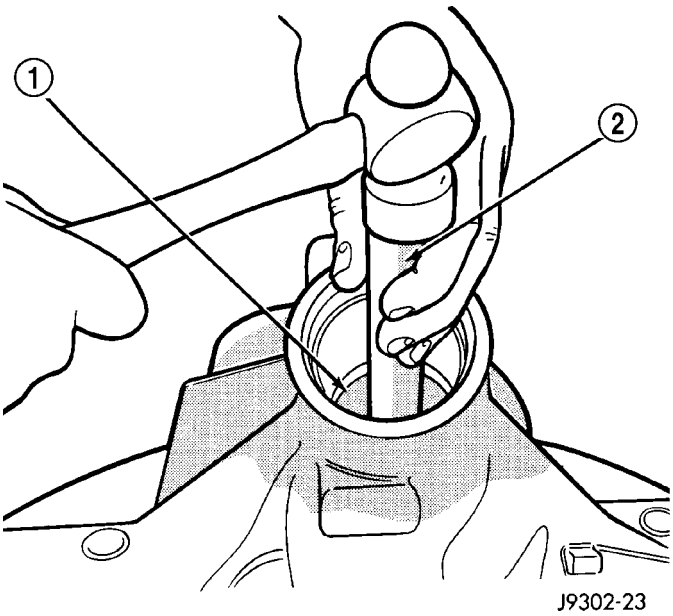

Fig. 59 REAR PINION BEARING CUP

1 - DRIVER
2 - HANDLE

(11) Remove rear bearing cup with Remover C-4307 (1) and Handle C-4171 (2) (Fig. 59).

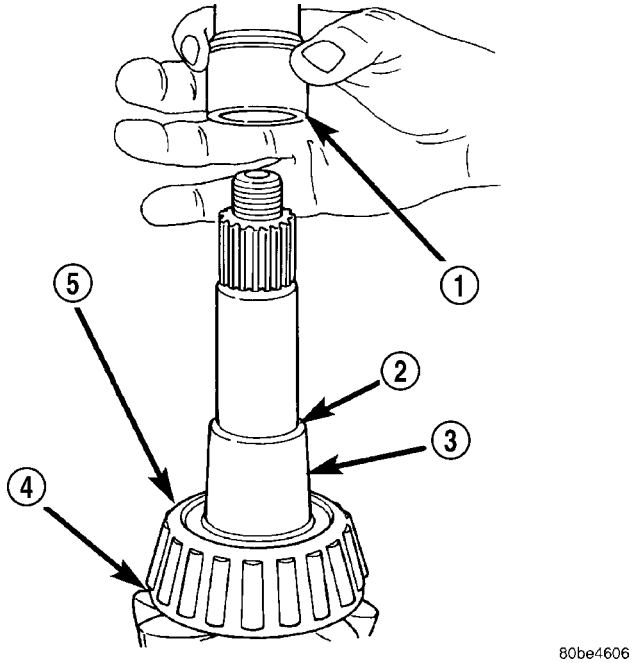

Fig. 60 COLLAPSIBLE SPACER

1 - COLLAPSIBLE SPACER
2 - SHOULDER
3 - PINION
4 - PINION DEPTH SHIM
5 - REAR BEARING

(12) Remove collapsible spacer (1) from pinion (3) (Fig. 60).

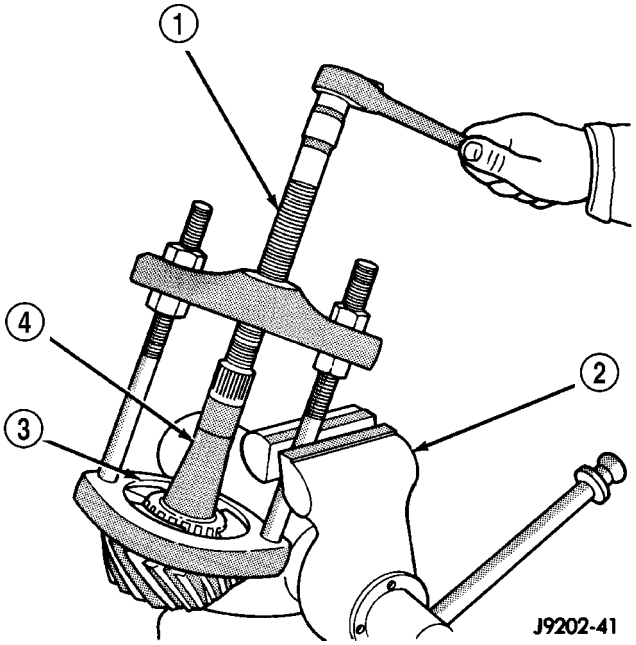

Fig. 61 REAR PINION BEARING PULLER

1 - PULLER
2 - VISE
3 - ADAPTERS
4 - PINION GEAR SHAFT

(13) Remove rear pinion bearing with Puller/Press C-293-PA (1) and Adapters C-293-47 (3) (Fig. 61).

(14) Remove depth shims from the pinion shaft and record the shims thickness.

GEAR-PINION/RING (Continued)

INSTALLATION

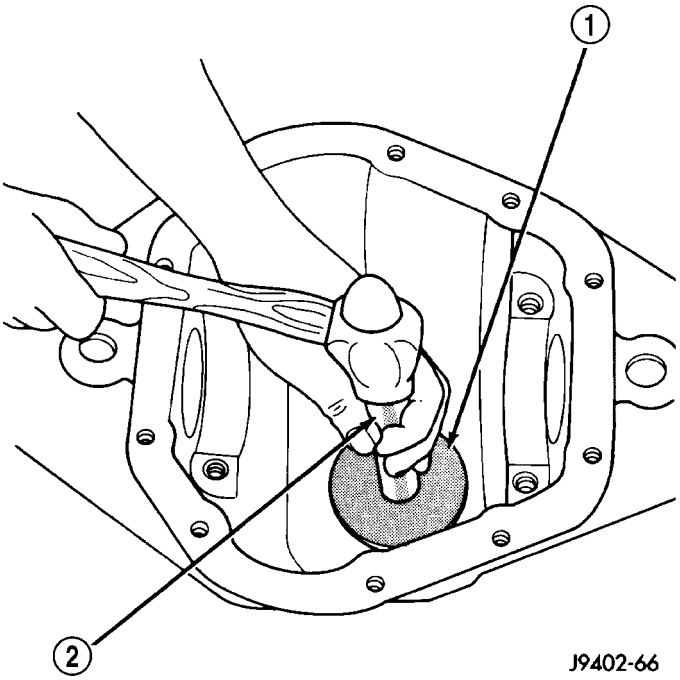

Fig. 62 REAR PINION BEARING CUP

1 - INSTALLER
2 - HANDLE

NOTE: A pinion depth shim/oil baffle is placed between the rear pinion bearing cone and pinion gear. If ring and pinion gears are reused, the original pinion depth shim/oil baffle can be used. Refer to Adjustments (Pinion Gear Depth) to select the proper shim thickness if ring and pinion gear are replaced.

(1) Apply Mopar Door Ease or equivalent lubricant to outside surface of pinion bearing cups.

(2) Install rear pinion bearing cup with Installer C-4308 (1) and Handle C-4171 (2) (Fig. 62).

(3) Install front pinion bearing cup with Installer D-130 (1) and Handle C-4171 (2) (Fig. 63).

(4) Install pinion front bearing and oil slinger, if equipped.

(5) Apply a light coating of gear lubricant on the lip of pinion seal and install seal (Fig. 64) with Installer C-4076-B (3) and Handle C-4735 (1).

(6) Place pinion depth shim on the pinion.

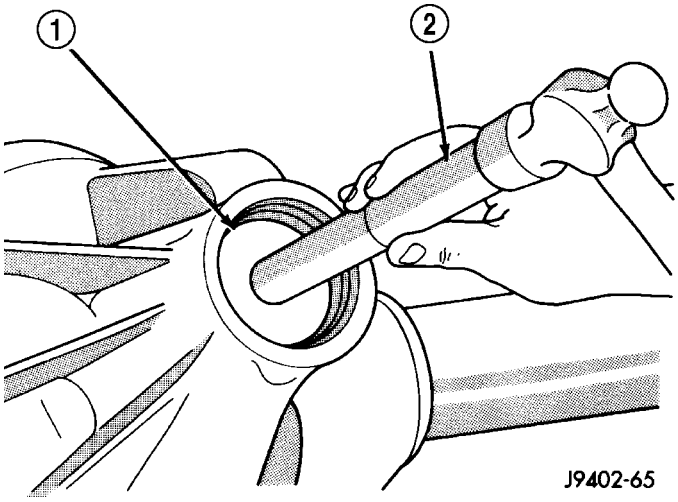

Fig. 63 FRONT BEARING CUP

1 - INSTALLER
2 - HANDLE

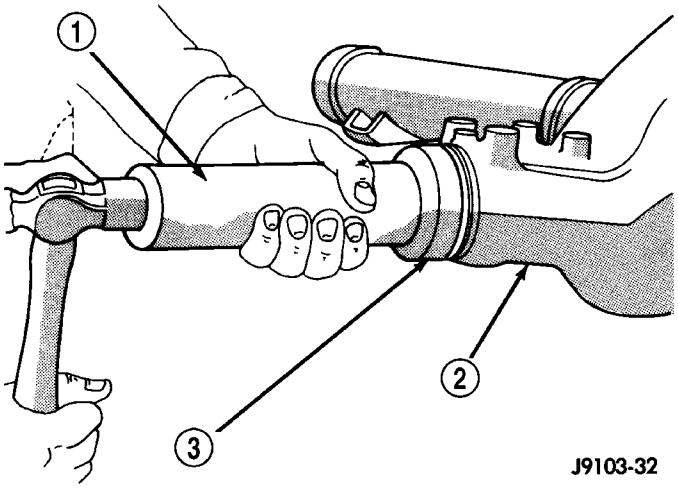

Fig. 64 PINION SEAL INSTALLER

1 - HANDLE
2 - DIFFERENTIAL HOUSING
3 - INSTALLER

GEAR-PINION/RING (Continued)

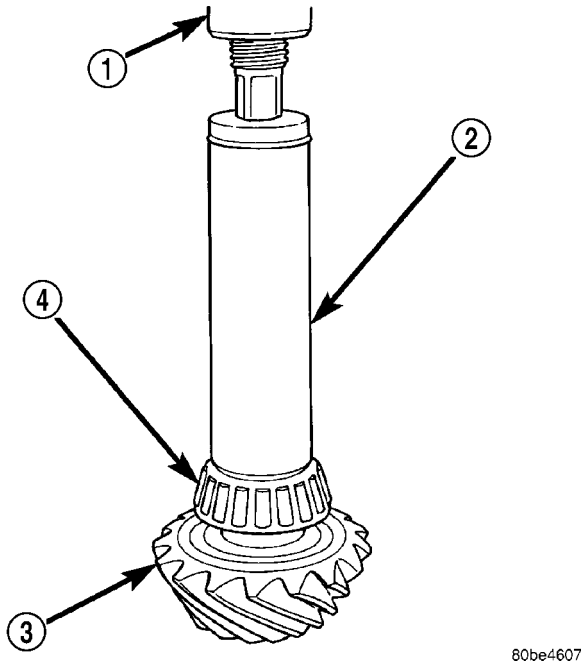

Fig. 65 REAR PINION BEARING

1 - PRESS
2 - INSTALLATION
3 - PINION GEAR
4 - REAR PINION BEARING

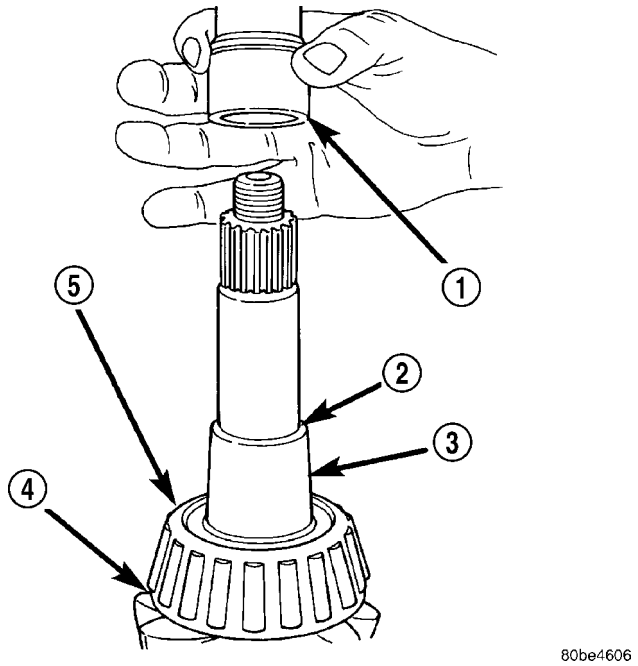

Fig. 66 COLLAPSIBLE PRELOAD SPACER

1 - COLLAPSIBLE SPACER
2 - SHOULDER
3 - PINION
4 - PINION DEPTH SHIM
5 - REAR BEARING

(7) Install rear bearing (4) on pinion gear (3) and slinger if equipped, with Installer 6448 (2) and a press (1) (Fig. 65).

(8) Install a **new** collapsible spacer (1) on pinion shaft (3) and install pinion in housing (Fig. 66).

(9) Install companion flange with Installer C-3718 and Holder 6719A.

(10) Install flange washer and a new nut on the pinion. The convex side of the washer must face outward.

(11) Holding flange with Holder 6719A (2) and tighten nut with torque wrench (3) to 285 N·m (210 ft. lbs.) (Fig. 67).

CAUTION: Never loosen pinion nut to decrease pinion rotating torque and never exceed specified preload torque. Failure to heed caution may result in damage.

(12) Hold yoke with Holder 6719A and slowly tighten the nut in 6.8 N·m (5 ft. lbs.) increments until the desired rotating torque is achieved. Measure rotating torque frequently to avoid over crushing the spacer.

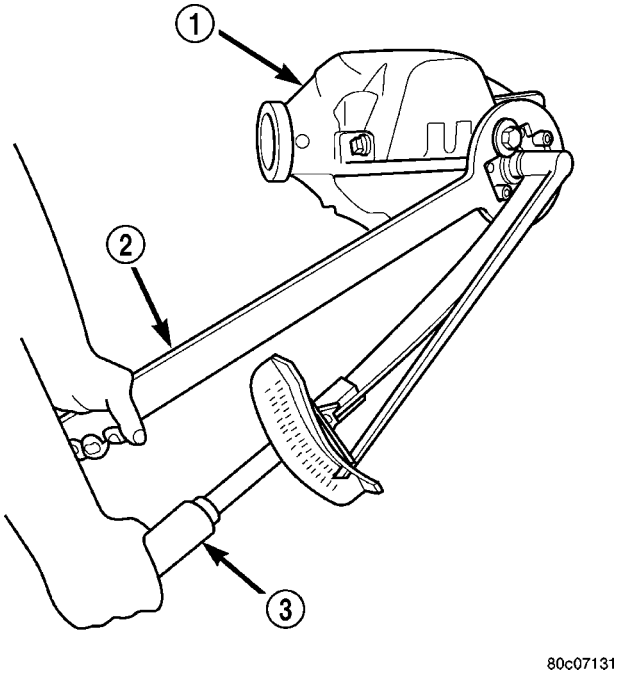

Fig. 67 PINION NUT

1 - DIFFERENTIAL HOUSING
2 - HOLDER
3 - TORQUE WRENCH

GEAR-PINION/RING (Continued)

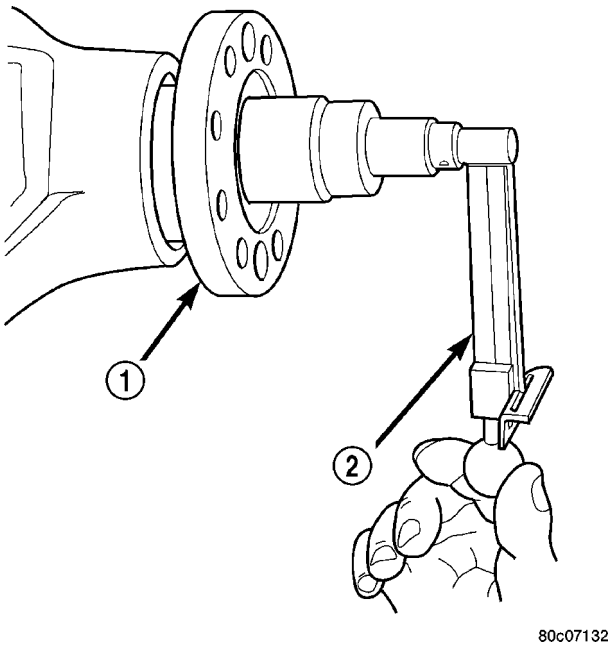

Fig. 68 PINION ROTATION TORQUE

1 - COMPANION FLANGE
2 - INCH POUND TORQUE WRENCH

(13) Check pinion (1) rotating torque with an inch pound torque wrench (2) (Fig. 68). The pinion gear rotating torque should be:

- Original Bearings: 1 to 2 N·m (10 to 20 in. lbs.).
- New Bearings: 1 to 5 N·m (10 to 30 in. lbs.).

(14) Install ring gear (3) on differential case (4) and start two ring gear bolts (2) (Fig. 69).

(15) Invert differential case in the vise.

(16) Install **new** ring gear bolts and alternately tighten to 102 N·m (75 ft. lbs.).

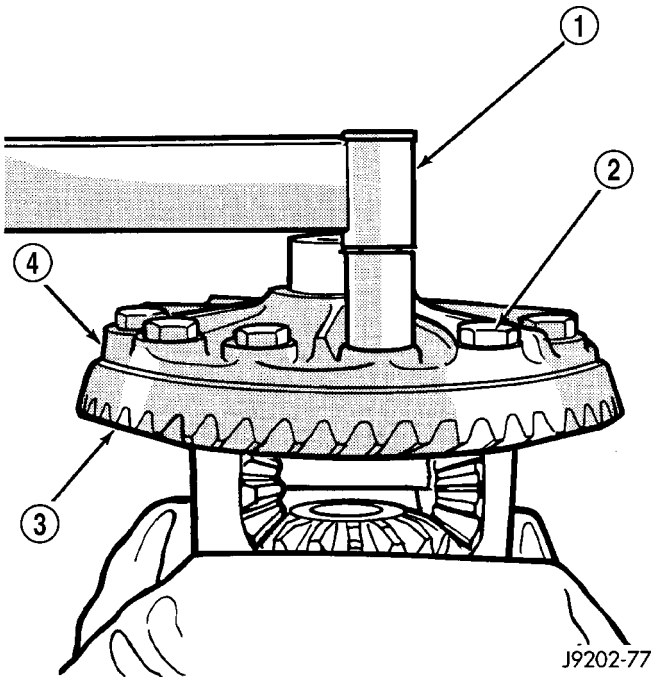

Fig. 69 RING GEAR

1 - TORQUE WRENCH
2 - BOLTS
3 - RING GEAR
4 - DIFFERENTIAL CASE

CAUTION: Never reuse the ring gear bolts. Failure to follow these instructions will result in damage.

(17) Install differential in axle housing and verify gear mesh refer to Adjustments (Gear Contact Pattern).

BRAKES

TABLE OF CONTENTS

page

BRAKES - BASE 1

BRAKES - ABS 41

BRAKES - BASE

TABLE OF CONTENTS

page

BRAKES - BASE
DESCRIPTION 2
WARNING 3
DIAGNOSIS AND TESTING - BASE BRAKE SYSTEM 3
STANDARD PROCEDURE
STANDARD PROCEDURE - PRESSURE BLEEDING 5
STANDARD PROCEDURE - MANUAL BLEEDING 6
SPECIFICATIONS
BRAKE COMPONENTS 7
TORQUE 7
SPECIAL TOOLS
BASE BRAKES 8
BRAKE LINES
DESCRIPTION 8
DIAGNOSIS AND TESTING - BRAKE LINE AND HOSES 8
STANDARD PROCEDURE
STANDARD PROCEDURE - DOUBLE INVERTED FLARING 8
STANDARD PROCEDURE - ISO FLARING . . . 9
REMOVAL
FRONT BRAKE CALIPER HOSE 9
REAR BRAKE HOSE 10
INSTALLATION
FRONT BRAKE CALIPER HOSE 10
INSTALLATION - REAR BRAKE HOSE 11
BRAKE PADS / SHOES
REMOVAL
REMOVAL - FRONT BRAKE PADS 11
REMOVAL - REAR DISC BRAKE PADS 11
INSTALLATION
INSTALLATION - FRONT BRAKE PADS 12
INSTALLATION - REAR DISC BRAKE PADS . 12
DISC BRAKE CALIPERS
DESCRIPTION 13
OPERATION 13
REMOVAL
FRONT 14
REAR 14
DISASSEMBLY 14
CLEANING 15
INSPECTION 15
ASSEMBLY 16
INSTALLATION
FRONT 17
REAR 18
DISC BRAKE CALIPER ADAPTER
REMOVAL 18
INSTALLATION 18
ROTORS
DIAGNOSIS AND TESTING
DIAGNOSIS AND TESTING - DISC BRAKE ROTOR 19
DIAGNOSIS AND TESTING - BRAKE DRUM IN HAT ROTOR 19
STANDARD PROCEDURE
STANDARD PROCEDURE - DISC BRAKE ROTOR 20
STANDARD PROCEDURE - BRAKE DRUM IN HAT ROTOR MACHINING 20
REMOVAL
FRONT 20
REAR 20
INSTALLATION
FRONT 21
REAR 21
BRAKE JUNCTION BLOCK
DESCRIPTION 21
OPERATION 21
DIAGNOSIS AND TESTING - PROPORTIONING VALVE 21
REMOVAL 22
INSTALLATION 22

PEDAL
DESCRIPTION 22
OPERATION 23
REMOVAL 23
INSTALLATION 23
POWER BRAKE BOOSTER
DESCRIPTION 23
OPERATION 24
DIAGNOSIS AND TESTING - MASTER CYLINDER/POWER BOOSTER 24
REMOVAL
LEFT HAND DRIVE (LHD) 25
RIGHT HAND DRIVE (RHD) 26
INSTALLATION
LEFT HAND DRIVE (LHD) 26
RIGHT HAND DRIVE (RHD) 27
MASTER CYLINDER
DESCRIPTION 28
OPERATION 28
DIAGNOSIS AND TESTING - MASTER CYLINDER/POWER BOOSTER 28
STANDARD PROCEDURE - MASTER CYLINDER BLEEDING 28
REMOVAL 29
INSTALLATION 30
FLUID
DIAGNOSIS AND TESTING
BRAKE FLUID CONTAMINATION 30
STANDARD PROCEDURE - MASTER CYLINDER FLUID LEVEL 30
SPECIFICATIONS
BRAKE FLUID 30
FLUID RESERVOIR
REMOVAL 31
INSTALLATION 31
SUPPORT PLATE
REMOVAL 31
INSTALLATION 32
PARKING BRAKE
DESCRIPTION 32
OPERATION 32
ADJUSTMENTS
ADJUSTMENT - LOCK OUT 33
CABLES
REMOVAL 33
INSTALLATION 34
LEVER
REMOVAL 35
INSTALLATION 36
SHOES
DESCRIPTION 36
OPERATION 36
REMOVAL 36
CLEANING - REAR DRUM IN HAT BRAKE 37
INSPECTION - REAR DRUM IN HAT BRAKE . . 37
INSTALLATION 38
ADJUSTMENTS
ADJUSTMENT - WITH ADJUSTING TOOL . . . 38
ADJUSTMENT - REAR DRUM IN HAT PARK BRAKE (ROTOR REMOVED) 39

BRAKES - BASE

DESCRIPTION

Power assist four wheel disc brakes are standard equipment. Disc brake components consist of single piston calipers and ventilated rotors (5). Rear disc brakes use a drum in hat design for the parking brake which is activated by brake shoes pressing against the inside of the drum in hat rotor (Fig. 1).

The parking brake mechanism is lever and cable operated. The cables are attached to equalizers on the rear disc brake support plate which moves the park brake shoes firmly against the drum in hat rotor. The parking brakes are operated by a hand lever.

A dual diaphragm vacuum power brake booster is used for all applications. All models have an aluminum master cylinder with plastic reservoir.

All non-ABS models are equipped with a junction block. The junction block contains a pressure differential valve and a fixed rate rear proportioning valve.

Factory brake lining on all models consists of an organic base material combined with metallic particles. The original equipment linings do not contain asbestos.

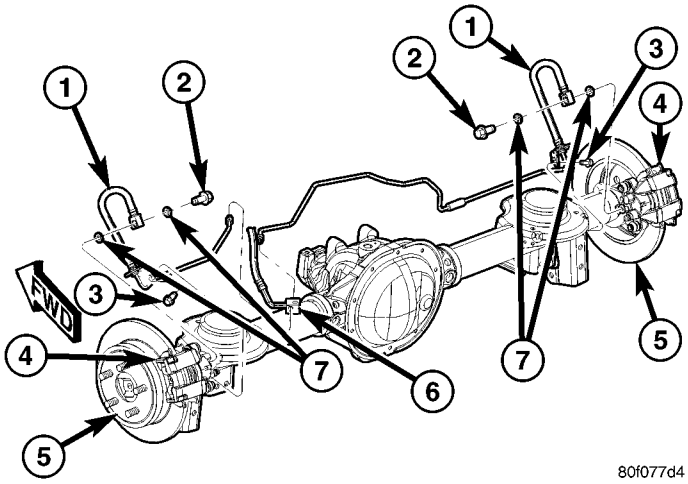

Fig. 1 REAR DISC BRAKES

1 - BRAKE HOSE
2 - BANJO BOLT
3 - MOUNTING BOLT
4 - CALIPER
5 - ROTOR
6 - BRAKE HOSE JUNCTION BLOCK
7 - BRAKE HOSE/BANJO BOLT WASHERS

BRAKES - BASE (Continued)

WARNING

WARNING: DUST AND DIRT ACCUMULATING ON BRAKE PARTS DURING NORMAL USE MAY CONTAIN ASBESTOS FIBERS FROM AFTERMARKET LININGS. BREATHING EXCESSIVE CONCENTRATIONS OF ASBESTOS FIBERS CAN CAUSE SERIOUS BODILY HARM. EXERCISE CARE WHEN SERVICING BRAKE PARTS. DO NOT CLEAN BRAKE PARTS WITH COMPRESSED AIR OR BY DRY BRUSHING. USE A VACUUM CLEANER SPECIFICALLY DESIGNED FOR THE REMOVAL OF ASBESTOS FIBERS FROM BRAKE COMPONENTS. IF A SUITABLE VACUUM CLEANER IS NOT AVAILABLE, CLEANING SHOULD BE DONE WITH A WATER DAMPENED CLOTH. DO NOT SAND, OR GRIND BRAKE LINING UNLESS EQUIPMENT USED IS DESIGNED TO CONTAIN THE DUST RESIDUE. DISPOSE OF ALL RESIDUE CONTAINING ASBESTOS FIBERS IN SEALED BAGS OR CONTAINERS TO MINIMIZE EXPOSURE TO YOURSELF AND OTHERS. FOLLOW PRACTICES PRESCRIBED BY THE OCCUPATIONAL SAFETY AND HEALTH ADMINISTRATION AND THE ENVIRONMENTAL PROTECTION AGENCY FOR THE HANDLING, PROCESSING, AND DISPOSITION OF DUST OR DEBRIS THAT MAY CONTAIN ASBESTOS FIBERS.

CAUTION: Never use gasoline, kerosene, alcohol, motor oil, transmission fluid, or any fluid containing mineral oil to clean the system components. These fluids damage rubber cups and seals. Use only fresh brake fluid or Mopar brake cleaner to clean or flush brake system components. These are the only cleaning materials recommended. If system contamination is suspected, check the fluid for dirt, discoloration, or separation into distinct layers. Also check the reservoir cap seal for distortion. Drain and flush the system with new brake fluid if contamination is suspected.

CAUTION: Use Mopar brake fluid, or an equivalent quality fluid meeting SAE/DOT standards J1703 and DOT 3. Brake fluid must be clean and free of contaminants. Use fresh fluid from sealed containers only to ensure proper antilock component operation.

CAUTION: Use Mopar multi-mileage or high temperature grease to lubricate caliper slide surfaces, drum brake pivot pins, and shoe contact points on the backing plates. Use multi-mileage grease or GE 661 or Dow 111 silicone grease on caliper slide pins to ensure proper operation.

DIAGNOSIS AND TESTING - BASE BRAKE SYSTEM

Base brake components consist of the brake shoes, calipers, rotors, brake lines, master cylinder, booster, and parking brake components.

Brake diagnosis involves determining if the problem is related to a mechanical, hydraulic, or vacuum operated component.

The first diagnosis step is the preliminary check.

PRELIMINARY BRAKE CHECK

(1) Check condition of tires and wheels. Damaged wheels and worn, damaged, or underinflated tires can cause pull, shudder, vibration, and a condition similar to grab.

(2) If complaint was based on noise when braking, check suspension components. Jounce front and rear of vehicle and listen for noise that might be caused by loose, worn or damaged suspension or steering components.

(3) Inspect brake fluid level and condition. Note that the brake reservoir fluid level will decrease in proportion to normal lining wear. **Also note that brake fluid tends to darken over time. This is normal and should not be mistaken for contamination.**

(a) If fluid level is abnormally low, look for evidence of leaks at calipers, brake lines, and master cylinder.

(b) If fluid appears contaminated, drain out a sample to examine. System will have to be flushed if fluid is separated into layers, or contains a substance other than brake fluid. The system seals and cups will also have to be replaced after flushing. Use clean brake fluid to flush the system.

(4) Check parking brake operation. Verify free movement and full release of cables and hand lever. Also note if vehicle was being operated with parking brake partially applied.

(5) Check brake pedal operation. Verify that pedal does not bind and has adequate free play. If pedal lacks free play, check pedal and power booster for being loose or for bind condition. Do not road test until condition is corrected.

(6) Check booster vacuum check valve and hose.

(7) If components checked appear OK, road test the vehicle.

BRAKES - BASE (Continued)

ROAD TESTING

(1) If complaint involved low brake pedal, pump pedal and note if it comes back up to normal height.

(2) Check brake pedal response with transmission in Neutral and engine running. Pedal should remain firm under constant foot pressure.

(3) During road test, make normal and firm brake stops in 25-40 mph range. Note faulty brake operation such as low pedal, hard pedal, fade, pedal pulsation, pull, grab, drag, noise, etc.

(4) Attempt to stop the vehicle with the parking brake only and note grab, drag, noise, etc.

PEDAL FALLS AWAY

A brake pedal that falls away under steady foot pressure is generally the result of a system leak. The leak point could be at a brake line, fitting, hose, or caliper. If leakage is severe, fluid will be evident at or around the leaking component.

Internal leakage (seal by-pass) in the master cylinder caused by worn or damaged piston cups, may also be the problem cause.

An internal leak in the ABS or junction block may also be the problem with no physical evidence.

LOW PEDAL

If a low pedal is experienced, pump the pedal several times. If the pedal comes back up worn linings or rotors are the most likely causes. The proper course of action is to inspect and replace all worn components.

SPONGY PEDAL

A spongy pedal is most often caused by air in the system. However, substandard brake lines and hoses can also cause a spongy pedal. The proper course of action is to bleed the system, and replace substandard quality brake hoses if suspected.

HARD PEDAL OR HIGH PEDAL EFFORT

A hard pedal or high pedal effort may be due to lining that is water soaked, contaminated, glazed, or badly worn. The power booster or check valve could also be faulty.

PEDAL PULSATION

Pedal pulsation is caused by components that are loose, or beyond tolerance limits.

The primary cause of pulsation are disc brake rotors with excessive lateral runout or thickness variation. Other causes are loose wheel bearings or calipers and worn, damaged tires.

NOTE: Some pedal pulsation may be felt during ABS activation.

BRAKE DRAG

Brake drag occurs when the lining is in constant contact with the rotor or drum. Drag can occur at one wheel, all wheels, fronts only, or rears only.

Drag is a product of incomplete brake shoe release. Drag can be minor or severe enough to overheat the linings, rotors and drums.

Minor drag will usually cause slight surface charring of the lining. It can also generate hard spots in rotors and drums from the overheat-cool down process. In most cases, the rotors, drums, wheels and tires are quite warm to the touch after the vehicle is stopped.

Severe drag can char the brake lining all the way through. It can also distort and score rotors and drums to the point of replacement. The wheels, tires and brake components will be extremely hot. In severe cases, the lining may generate smoke as it chars from overheating.

Common causes of brake drag are:

- Seized or improperly adjusted parking brake cables.
- Loose/worn wheel bearing.
- Seized caliper piston.
- Caliper binding on corroded bushings or rusted slide surfaces.
- Loose caliper mounting.
- Drum parking brake shoes binding on worn/damaged support plates.
- Mis-assembled components.
- Long booster output rod.

If brake drag occurs at all wheels, the problem may be related to a blocked master cylinder return port, or faulty power booster (binds-does not release).

BRAKE FADE

Brake fade is usually a product of overheating caused by brake drag. However, brake overheating and resulting fade can also be caused by riding the brake pedal, making repeated high deceleration stops in a short time span, or constant braking on steep mountain roads. Refer to the Brake Drag information in this section for causes.

BRAKE PULL

Front brake pull condition could result from:

- Contaminated lining in one caliper
- Seized caliper piston
- Binding caliper
- Loose caliper
- Rusty caliper slide surfaces
- Improper brake shoes
- Damaged rotor

A worn, damaged wheel bearing or suspension component are further causes of pull. A damaged front tire (bruised, ply separation) can also cause pull.

BRAKES - BASE (Continued)

A common and frequently misdiagnosed pull condition is where direction of pull changes after a few stops. The cause is a combination of brake drag followed by fade at one of the brake units.

As the dragging brake overheats, efficiency is so reduced that fade occurs. Since the opposite brake unit is still functioning normally, its braking effect is magnified. This causes pull to switch direction in favor of the normally functioning brake unit.

An additional point when diagnosing a change in pull condition concerns brake cool down. Remember that pull will return to the original direction, if the dragging brake unit is allowed to cool down (and is not seriously damaged).

REAR BRAKE GRAB OR PULL

Rear grab or pull is usually caused by improperly adjusted or seized parking brake cables, contaminated lining, bent or binding shoes and support plates, or improperly assembled components. This is particularly true when only one rear wheel is involved. However, when both rear wheels are affected, the master cylinder or proportioning valve could be at fault.

BRAKES DO NOT HOLD AFTER DRIVING THROUGH DEEP WATER PUDDLES

This condition is generally caused by water soaked lining. If the lining is only wet, it can be dried by driving with the brakes very lightly applied for a mile or two. However, if the lining is both soaked and dirt contaminated, cleaning and/or replacement will be necessary.

BRAKE LINING CONTAMINATION

Brake lining contamination is mostly a product of leaking calipers, worn seals, driving through deep water puddles, or lining that has become covered with grease and grit during repair. Contaminated lining should be replaced to avoid further brake problems.

WHEEL AND TIRE PROBLEMS

Some conditions attributed to brake components may actually be caused by a wheel or tire problem.

A damaged wheel can cause shudder, vibration and pull. A worn or damaged tire can also cause pull.

Severely worn tires with very little tread left can produce a grab-like condition as the tire loses and recovers traction. Flat-spotted tires can cause vibration and generate shudder during brake operation. A tire with internal damage such as a severe bruise, cut, or ply separation can cause pull and vibration.

BRAKE NOISES

Some brake noise is common with some disc brakes during the first few stops after a vehicle has been parked overnight or stored. This is primarily due to the formation of trace corrosion (light rust) on metal surfaces. This light corrosion is typically cleared from the metal surfaces after a few brake applications causing the noise to subside.

BRAKE SQUEAK/SQUEAL

Brake squeak or squeal may be due to linings that are wet or contaminated with brake fluid, grease, or oil. Glazed linings and rotors with hard spots can also contribute to squeak. Dirt and foreign material embedded in the brake lining will also cause squeak/squeal.

A very loud squeak or squeal is frequently a sign of severely worn brake lining. If the lining has worn through to the brake shoes in spots, metal-to-metal contact occurs. If the condition is allowed to continue, rotors and drums can become so scored that replacement is necessary.

BRAKE CHATTER

Brake chatter is usually caused by loose or worn components, or glazed/burnt lining. Rotors with hard spots can also contribute to chatter. Additional causes of chatter are out-of-tolerance rotors, brake lining not securely attached to the shoes, loose wheel bearings and contaminated brake lining.

THUMP/CLUNK NOISE

Thumping or clunk noises during braking are frequently **not** caused by brake components. In many cases, such noises are caused by loose or damaged steering, suspension, or engine components. However, calipers that bind on the slide surfaces can generate a thump or clunk noise.

STANDARD PROCEDURE

STANDARD PROCEDURE - PRESSURE BLEEDING

Use Mopar brake fluid, or an equivalent quality fluid meeting SAE J1703-F and DOT 3 standards only. Use fresh, clean fluid from a sealed container at all times.

Do not pump the brake pedal at any time while bleeding. Air in the system will be compressed into small bubbles that are distributed throughout the hydraulic system. This will make additional bleeding operations necessary.

Do not allow the master cylinder to run out of fluid during bleed operations. An empty cylinder will allow additional air to be drawn into the system. Check the cylinder fluid level frequently and add fluid as needed.

BRAKES - BASE (Continued)

Bleed only one brake component at a time in the following sequence:

- Master Cylinder
- Junction Block
- Right Rear Wheel
- Left Rear Wheel
- Right Front Wheel
- Left Front Wheel

Follow the manufacturers instructions carefully when using pressure equipment. Do not exceed the tank manufacturers pressure recommendations. Generally, a tank pressure of 15-20 psi is sufficient for bleeding.

Fill the bleeder tank with recommended fluid and purge air from the tank lines before bleeding.

Do not pressure bleed without a proper master cylinder adapter. The wrong adapter can lead to leakage, or drawing air back into the system. Use adapter provided with the equipment or Adapter 6921.

STANDARD PROCEDURE - MANUAL BLEEDING

Use Mopar brake fluid, or an equivalent quality fluid meeting SAE J1703-F and DOT 3 standards only. Use fresh, clean fluid from a sealed container at all times.

Do not pump the brake pedal at any time while bleeding. Air in the system will be compressed into small bubbles that are distributed throughout the hydraulic system. This will make additional bleeding operations necessary.

Do not allow the master cylinder to run out of fluid during bleed operations. An empty cylinder will allow additional air to be drawn into the system. Check the cylinder fluid level frequently and add fluid as needed.

Bleed only one brake component at a time in the following sequence:

- Master Cylinder
- Junction Block
- Right Rear Wheel
- Left Rear Wheel
- Right Front Wheel
- Left Front Wheel

(1) Remove reservoir filler caps and fill reservoir.

(2) If calipers were overhauled, open all caliper bleed screws. Then close each bleed screw as fluid starts to drip from it. Top off master cylinder reservoir once more before proceeding.

(3) Attach one end of bleed hose to bleed screw and insert opposite end in glass container partially filled with brake fluid (Fig. 2). Be sure end of bleed hose is immersed in fluid.

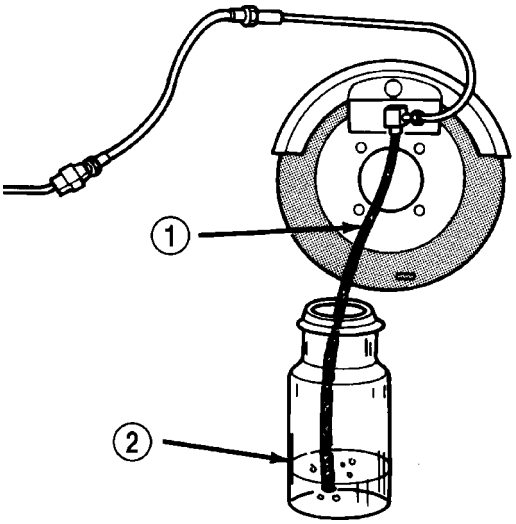

J8905-18

Fig. 2 Bleed Hose Setup

1 - BLEED HOSE
2 - FLUID CONTAINER PARTIALLY FILLED WITH FLUID

(4) Open up bleeder, then have a helper press down the brake pedal. Once the pedal is down close the bleeder. Repeat bleeding until fluid stream is clear and free of bubbles. Then move to the next wheel.

BRAKES - BASE (Continued)

SPECIFICATIONS

BRAKE COMPONENTS

SPECIFICATIONS

DESCRIPTION	SPECIFICATION
Disc Brake Rotor Diameter Front	288 x 28 mm (11.3 x 1.102 in)
Disc Brake Rotor Diameter Rear	285 x 12 mm (11 x 0.472 in)
Disc Brake Rotor Ventilated Front	Max. Runout 0.102 mm (0.004 in.)
Disc Brake Rotor Solid Rear	Max. Runout 0.102 mm (0.004 in.)
Disc Brake Rotor Ventilated Front	Max. Thickness Variation 0.015 mm (0.0006 in.)
Disc Brake Rotor Solid Rear	Max. Thickness Variation 0.018 mm (0.0007 in.)
Disc Brake Rotor Ventilated Front	Min. Thickness 26.0 mm (1.0236 in.)
Disc Brake Rotor Solid Rear	Min. Thickness 11.0 mm (0.4331 in.)
Disc Brake Caliper	Sliding
Brake Booster	Dual Diaphragm

TORQUE

TORQUE SPECIFICATIONS

DESCRIPTION	N·m	Ft. Lbs.	In. Lbs.
Brake Booster Mounting Nuts	25	—	220
Brake Pedal Shaft to Steering Column Support Bracket Nut & Washer Assembly	22.6	—	200
Master Cylinder Mounting Nuts	25	—	220
Master Cylinder Brake Lines	20	15	180
Junction Block Mounting Nuts	14.1	—	125
Junction Block Brake Lines	20	15	180
Caliper Mounting Bolts Front	15	11	—
Caliper Mounting Bolts Rear	25	—	220
Caliper Brake Hose Banjo Bolt Front	31	23	—
Caliper Brake Hose Banjo Bolt Rear	31	23	—
Parking Brake Lever Screws	10-14	7-10	—
Parking Brake Lever Bracket Screws	10-14	7-10	—

BRAKES - BASE (Continued)

SPECIAL TOOLS

BASE BRAKES

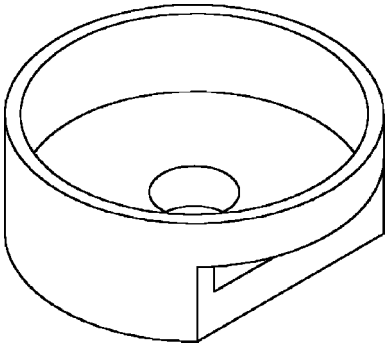

Installer Caliper Dust Boot 8280

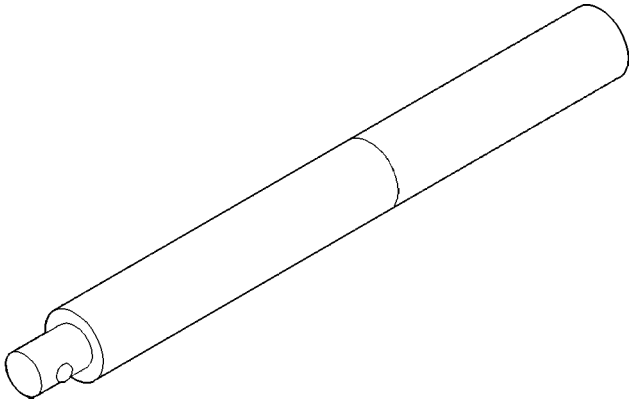

Handle C-4171

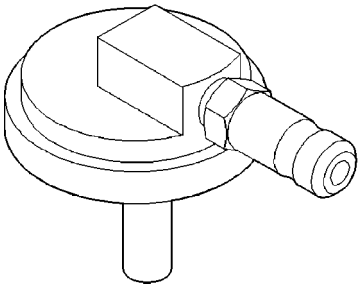

Adapter Pressure Bleeder 6921

BRAKE LINES

DESCRIPTION

Flexible rubber hose is used at both front and rear brakes and at the rear axle junction block. Double walled steel tubing is used to connect the master cylinder to the major hydraulic braking components and then to the flexible rubber hoses. Double inverted style and ISO style flares are used on the brake lines.

DIAGNOSIS AND TESTING - BRAKE LINE AND HOSES

Flexible rubber hose is used at both front and rear brakes and at the rear axle junction block. Inspect the hoses whenever the brake system is serviced, at every engine oil change, or whenever the vehicle is in for service.

Inspect the hoses for surface cracking, scuffing, or worn spots. Replace any brake hose immediately if the fabric casing of the hose is exposed due to cracks or abrasions.

Also check brake hose installation. Faulty installation can result in kinked, twisted hoses, or contact with the wheels and tires or other chassis components. All of these conditions can lead to scuffing, cracking and eventual failure.

The steel brake lines should be inspected periodically for evidence of corrosion, twists, kinks, leaks, or other damage. Heavily corroded lines will eventually rust through causing leaks. In any case, corroded or damaged brake lines should be replaced.

Factory replacement brake lines and hoses are recommended to ensure quality, correct length and superior fatigue life. Care should be taken to make sure that brake line and hose mating surfaces are clean and free from nicks and burrs. Also remember that right and left brake hoses are not interchangeable.

Use new copper seal washers at all caliper connections. Be sure brake line connections are properly made (not cross threaded) and tightened to recommended torque.

STANDARD PROCEDURE

STANDARD PROCEDURE - DOUBLE INVERTED FLARING

A preformed metal brake tube is recommended and preferred for all repairs. However, double-wall steel tube can be used for emergency repair when factory replacement parts are not readily available.

Special bending tools are needed to avoid kinking or twisting of metal brake tubes. Special flaring tools are needed to make a double inverted flare or ISO flare.

(1) Cut off damaged tube with Tubing Cutter.

(2) Ream cut edges of tubing to ensure proper flare.

(3) Install replacement tube nut on the tube.

(4) Insert tube in flaring tool.

(5) Place gauge form over the end of the tube.

(6) Push tubing through flaring tool jaws until tube contacts recessed notch in gauge that matches tube diameter.

(7) Tighten the tool bar on the tube

BRAKE LINES (Continued)

(8) Insert plug on gauge in the tube. Then swing compression disc over gauge and center tapered flaring screw in recess of compression disc (Fig. 3).

(9) Tighten tool handle until plug gauge is squarely seated on jaws of flaring tool. This will start the inverted flare.

(10) Remove the plug gauge and complete the inverted flare.

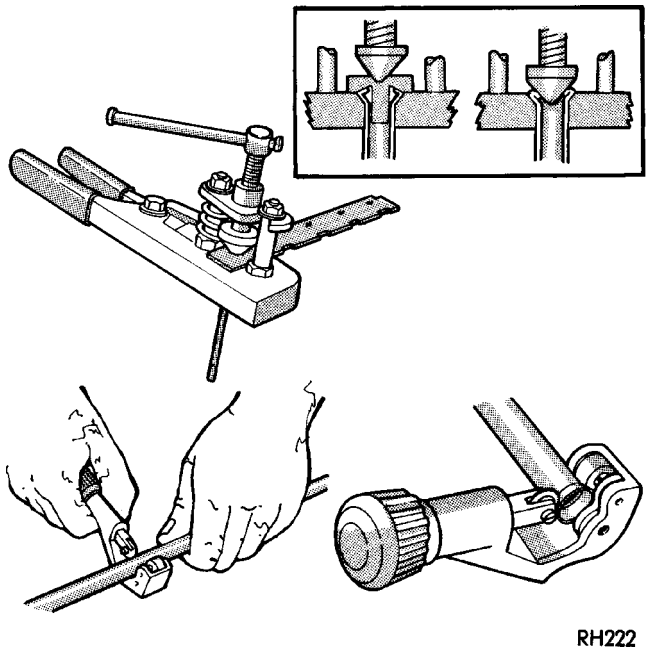

Fig. 3 Inverted

STANDARD PROCEDURE - ISO FLARING

A preformed metal brake tube is recommended and preferred for all repairs. However, double-wall steel tube can be used for emergency repair when factory replacement parts are not readily available.

To make a ISO flare use a Flaring Tool kit.

(1) Cut off damaged tube with Tubing Cutter.

(2) Remove any burrs from the inside of the tube.

(3) Install tube nut on the tube.

(4) Position the tube in the flaring tool flush with the top of the tool bar (Fig. 4). Then tighten the tool bar on the tube.

(5) Install the correct size adaptor on the flaring tool yoke screw.

(6) Lubricate the adaptor.

(7) Align the adaptor and yoke screw over the tube (Fig. 4).

(8) Turn the yoke screw in until the adaptor is squarely seated on the tool bar.

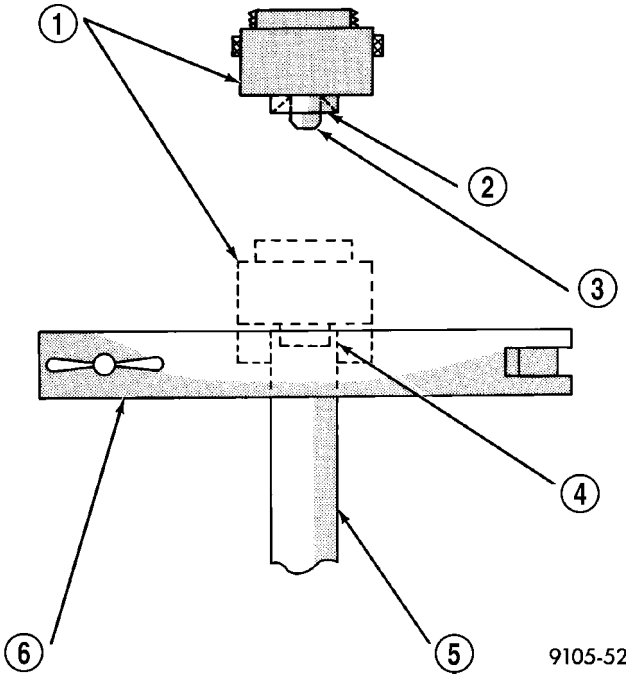

Fig. 4 ISO Flaring

1 - ADAPTER
2 - LUBRICATE HERE
3 - PILOT
4 - FLUSH WITH BAR
5 - TUBING
6 - BAR ASSEMBLY

REMOVAL

FRONT BRAKE CALIPER HOSE

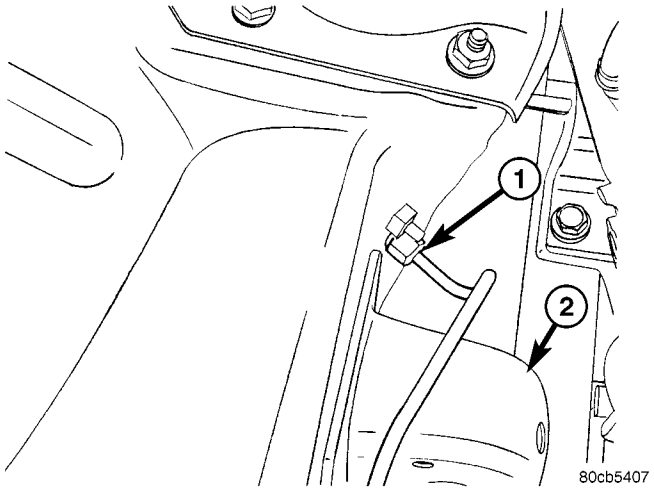

Fig. 5 INNER FENDER BRAKE LINE

1 - BRAKE LINE
2 - UPPER CONTROL ARM MOUNT

(1) Install prop rod on the brake pedal to keep pressure on the brake system.

BRAKE LINES (Continued)

(2) Remove the brake line (1) from the brake hose inside the engine compartment by the front control arm bolt (2) (Fig. 5).

(3) Raise and support vehicle.

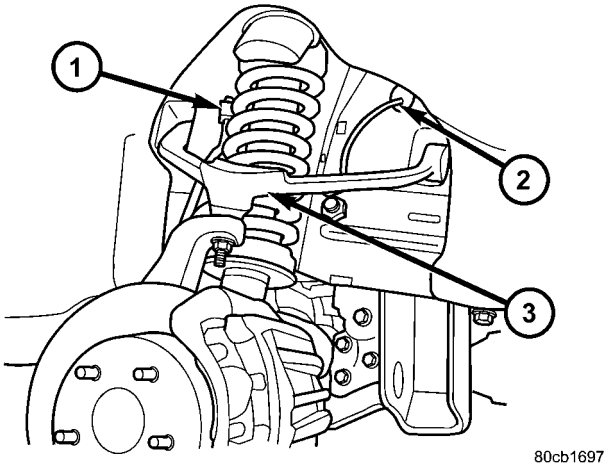

Fig. 6 FRONT BRAKE HOSE

1 - TOP OF FRONT BRAKE HOSE
2 - WHEEL SPEED SENSOR WIRE
3 - UPPER CONTROL ARM

(4) Remove the brake hose banjo bolt at the caliper.

(5) Remove the mounting bolt for the top of the brake hose (1) at the vehicle (Fig. 6).

(6) Remove the hose.

REAR BRAKE HOSE

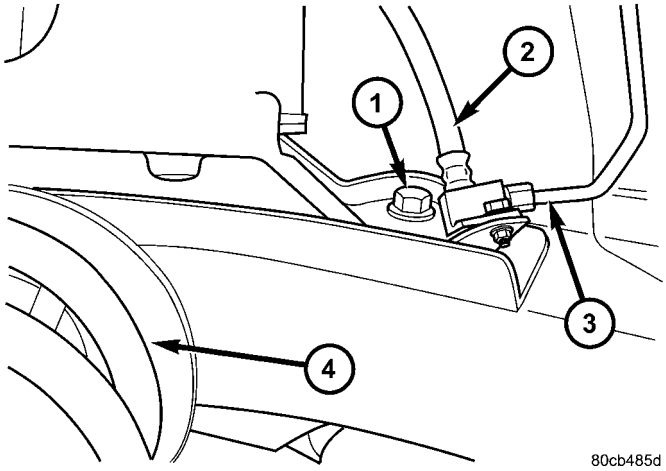

Fig. 7 BRAKE HOSE AT THE BODY

1 - MOUNTING BOLT
2 - BRAKE HOSE
3 - BRAKE LINE
4 - COIL SPRING

(1) Install prop rod on the brake pedal to keep pressure on the brake system.

(2) Raise and support the vehicle.

(3) Remove the brake line (3) from the hose (2) at the body (Fig. 7).

(4) Remove the brake hose mounting bolt (1) at the top of the hose located at the body (Fig. 7).

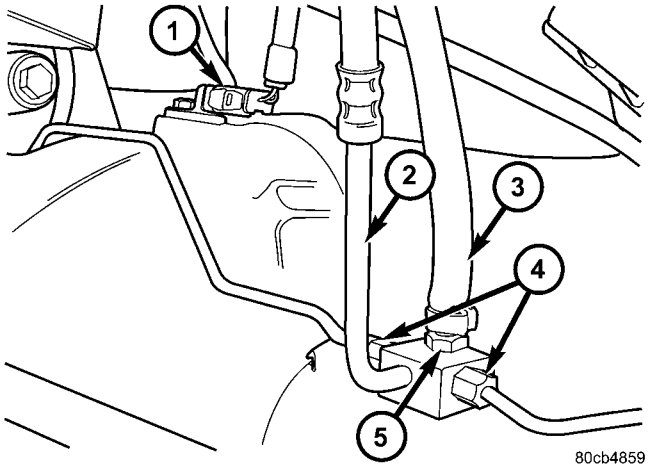

Fig. 8 BRAKE HOSE AT THE AXLE

1 - REAR WHEEL SPEED SENSOR
2 - BRAKE HOSE
3 - VENT HOSE
4 - BRAKE LINES
5 - MOUNTING BOLT

(5) Remove the vent tube (3) (Fig. 8).

(6) Remove the two brake lines (4) at the bottom of the hose located at the axle (Fig. 8).

(7) Remove the mounting bolt (5) for the brake hose (2) at the axle (Fig. 8).

(8) Remove the hose (2).

INSTALLATION

FRONT BRAKE CALIPER HOSE

(1) Install the hose (3).

(2) Install the mounting bolt (2) for the top of the brake hose (3) at the vehicle (Fig. 9).

(3) Install the brake hose banjo bolt at the caliper.

(4) Lower the vehicle and remove the support.

(5) Install the brake line to the brake hose inside the engine compartment by the front control arm bolt (4).

(6) Remove the prop rod from the brake pedal.

(7) Bleed the brake system (Refer to 5 - BRAKES - STANDARD PROCEDURE).

BRAKE LINES (Continued)

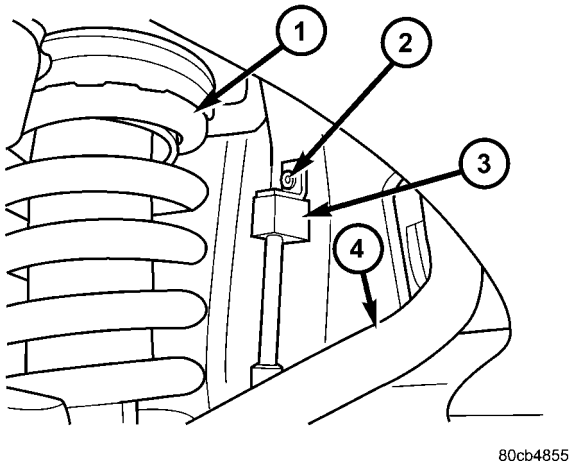

Fig. 9 BRAKE HOSE MOUNTED

1 - COIL SPRING
2 - MOUNTING BOLT
3 - BRAKE HOSE
4 - FRONT OF THE UPPER CONTROL ARM

INSTALLATION - REAR BRAKE HOSE

(1) Install the hose.
(2) Install the mounting bolt for the brake hose at the axle (Fig. 8).
(3) Install the two brake lines at the bottom of the hose located at the axle (Fig. 8).
(4) Install the vent tube (Fig. 8).
(5) Install the brake hose mounting bolt at the top of the hose located at the body (Fig. 7).
(6) Install the brake line to the hose at the body (Fig. 7).
(7) Lower the vehicle and remove the support.
(8) Remove the prop rod.
(9) Bleed the brake system (Refer to 5 - BRAKES - STANDARD PROCEDURE).

BRAKE PADS / SHOES

REMOVAL

REMOVAL - FRONT BRAKE PADS

(1) Raise and support the vehicle.
(2) Remove the front wheel and tire assembly.
(3) Drain a small amount of fluid from the master cylinder brake reservoir with a **clean** suction gun.
(4) Bottom the caliper pistons into the caliper by prying the caliper over.
(5) Remove the caliper mounting bolts.
(6) Remove the disc brake caliper from the mount.

CAUTION: Never allow the disc brake caliper to hang from the brake hose. Damage to the brake hose will result. Provide a suitable support to hang the caliper securely.

(7) Remove the inboard and outboard pads.

REMOVAL - REAR DISC BRAKE PADS

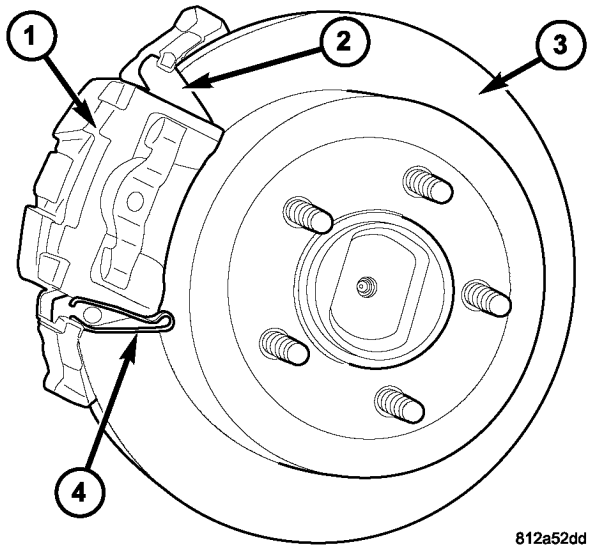

Fig. 10 REAR BRAKE PADS

1 - DISC BRAKE CALIPER
2 - OUTBOARD BRAKE PAD
3 - DISC BRAKE ROTOR
4 - ANTI-RATTLE SPRING CLIP

(1) Raise and support vehicle.
(2) Remove the wheel and tire assemblies.
(3) Compress the caliper (1).
(4) Remove the caliper slide pin bolts, (Refer to 5 - BRAKES/HYDRAULIC/MECHANICAL/DISC BRAKE CALIPERS - REMOVAL).

NOTE: Do not allow brake hose to support caliper assembly.

(5) Remove the caliper by tilting the top up and off the caliper adapter (Fig. 10).
(6) Support and hang the caliper.
(7) Remove the inboard brake pad (1) from the caliper (Fig. 11).
(8) Remove the outboard brake pad (2) from the caliper (Fig. 11).

BRAKE PADS / SHOES (Continued)

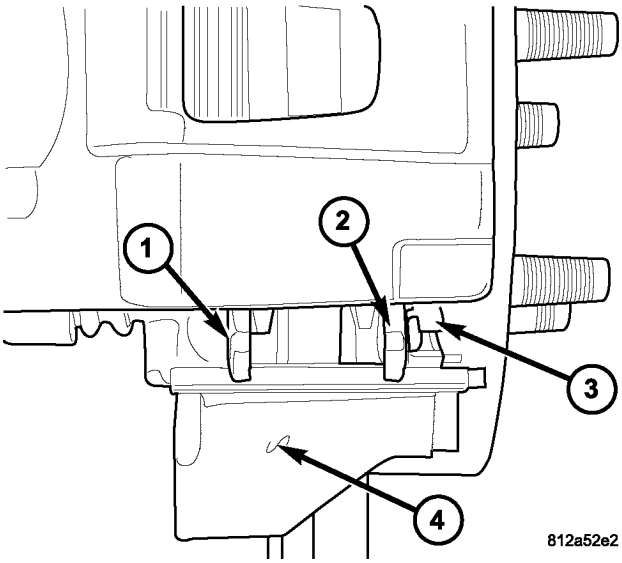

Fig. 11 BRAKE PAD RATTLE CLIP

1 - INBOARD BRAKE PAD
2 - OUTBOARD BRAKE PAD
3 - ANTI-RATTLE SPRING CLIP
4 - CALIPER ADAPTER

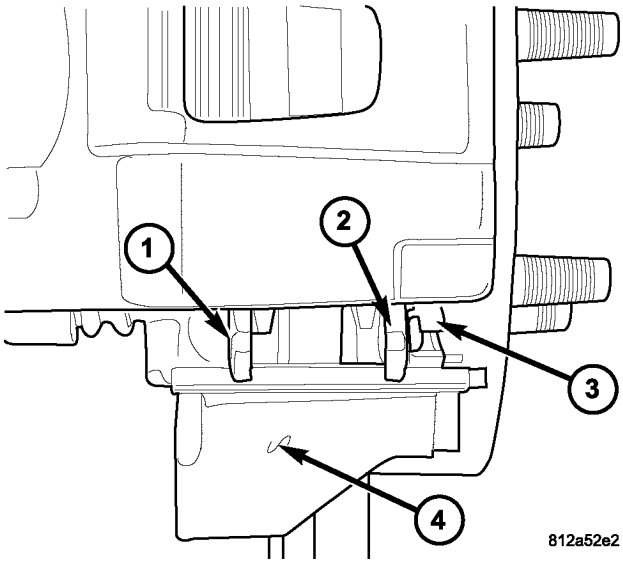

Fig. 12 BRAKE PAD RATTLE CLIP

1 - INBOARD BRAKE PAD
2 - OUTBOARD BRAKE PAD
3 - ANTI-RATTLE SPRING CLIP
4 - CALIPER ADAPTER

INSTALLATION

INSTALLATION - FRONT BRAKE PADS

(1) Install the inboard and outboard pads.

(2) Install the caliper (Refer to 5 - BRAKES/HYDRAULIC/MECHANICAL/DISC BRAKE CALIPERS - INSTALLATION).

(3) Install the tire and wheel assembly. (Refer to 22 - TIRES/WHEELS/WHEELS - STANDARD PROCEDURE).

INSTALLATION - REAR DISC BRAKE PADS

(1) Place an old brake shoe between a C-clamp and caliper piston. Bottom piston in the caliper bore with C-clamp.

(2) Clean caliper mounting adapter (4) and anti-rattle spring guide (3).

(3) Lubricate anti-rattle spring guides (3) with Mopar brake grease.

(4) Install anti-rattle spring guides (3).

NOTE: Anti-rattle spring guides (3) are not interchangeable.

(5) Install inboard brake pad (1) to the caliper (Fig. 12).

(6) Install outboard brake pad (2) to the caliper (Fig. 12).

(7) Tilt the top of the caliper over rotor and under adapter. Then push the bottom of the caliper down onto the adapter (4) (Fig. 12).

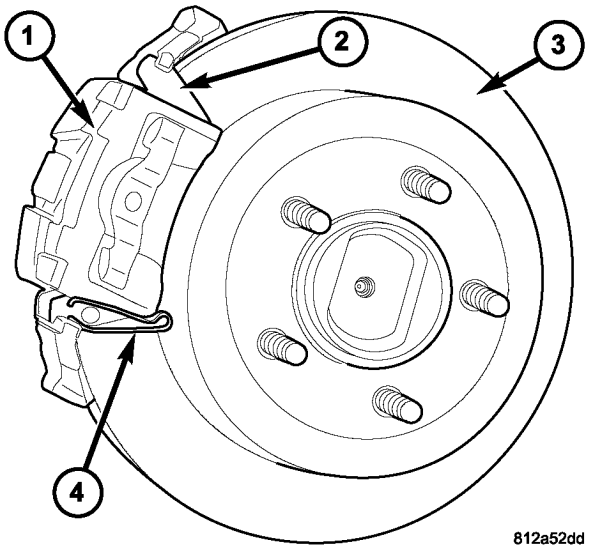

Fig. 13 REAR BRAKE PADS

1 - DISC BRAKE CALIPER
2 - OUTBOARD BRAKE PAD
3 - DISC BRAKE ROTOR
4 - ANTI-RATTLE SPRING CLIP

(8) Install caliper (1) to the rotor and then install the caliper slide pin bolts, (Refer to 5 - BRAKES/HYDRAULIC/MECHANICAL/DISC BRAKE CALIPERS - INSTALLATION) (Fig. 13).

(9) Install wheel and tire assemblies and lower vehicle, (Refer to 22 - TIRES/WHEELS/WHEELS - STANDARD PROCEDURE).

BRAKE PADS / SHOES (Continued)

(10) Apply brakes several times to seat caliper pistons and brake shoes and obtain firm pedal.

(11) Top off master cylinder fluid level.

DISC BRAKE CALIPERS

DESCRIPTION

The calipers are a single piston type. The calipers are free to slide laterally, this allows continuous compensation for lining wear.

OPERATION

When the brakes are applied fluid pressure is exerted against the caliper piston. The fluid pressure is exerted equally and in all directions. This means pressure exerted against the caliper piston and within the caliper bore will be equal (Fig. 14).

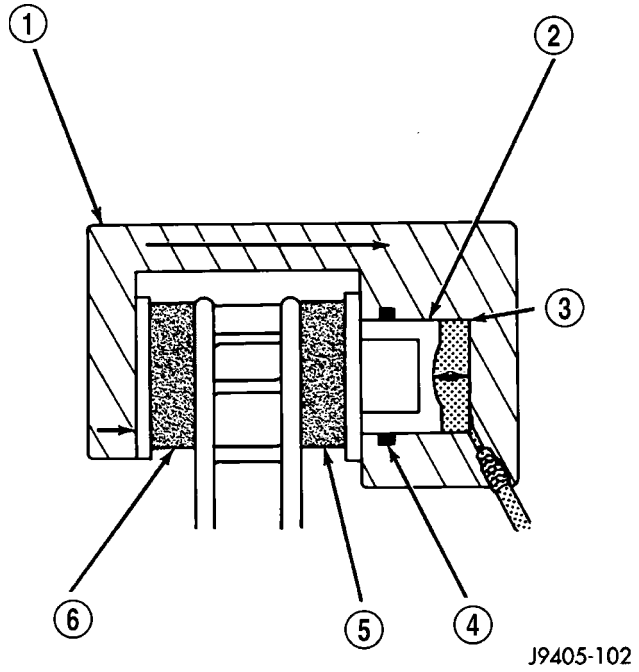

Fig. 14 Brake Caliper Operation

1 - CALIPER
2 - PISTON
3 - PISTON BORE
4 - SEAL
5 - INBOARD SHOE
6 - OUTBOARD SHOE

Fluid pressure applied to the piston is transmitted directly to the inboard brake shoe. This forces the shoe lining against the inner surface of the disc brake rotor. At the same time, fluid pressure within the piston bore forces the caliper to slide inward on the mounting bolts. This action brings the outboard brake shoe lining into contact with the outer surface of the disc brake rotor.

In summary, fluid pressure acting simultaneously on both piston and caliper, produces a strong clamping action. When sufficient force is applied, friction will attempt to stop the rotors from turning and bring the vehicle to a stop.

Application and release of the brake pedal generates only a very slight movement of the caliper and piston. Upon release of the pedal, the caliper and piston return to a rest position. The brake shoes do not retract an appreciable distance from the rotor. In fact, clearance is usually at, or close to zero. The reasons for this are to keep road debris from getting between the rotor and lining and in wiping the rotor surface clear each revolution.

The caliper piston seal controls the amount of piston extension needed to compensate for normal lining wear.

During brake application, the seal is deflected outward by fluid pressure and piston movement (Fig. 15). When the brakes (and fluid pressure) are released, the seal relaxes and retracts the piston.

The amount of piston retraction is determined by the amount of seal deflection. Generally the amount is just enough to maintain contact between the piston and inboard brake shoe.

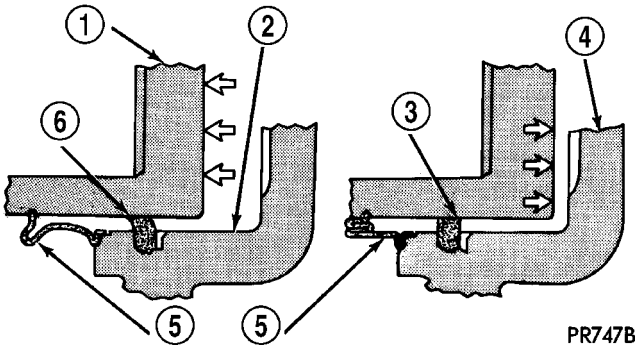

Fig. 15 Lining Wear Compensation By Piston Seal

1 - PISTON
2 - CYLINDER BORE
3 - PISTON SEAL BRAKE PRESSURE OFF
4 - CALIPER HOUSING
5 - DUST BOOT
6 - PISTON SEAL BRAKE PRESSURE ON

DISC BRAKE CALIPERS (Continued)

REMOVAL

FRONT

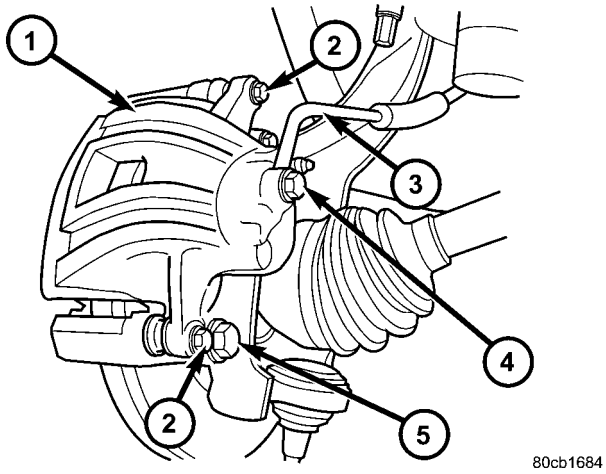

Fig. 16 DISC BRAKE CALIPER

1 - DISC BRAKE CALIPER
2 - CALIPER SLIDE MOUNTING BOLTS
3 - BRAKE HOSE
4 - BANJO BOLT
5 - CALIPER ADAPTER MOUNTING BOLT

(1) Install prop rod on the brake pedal to keep pressure on the brake system.
(2) Raise and support vehicle.
(3) Remove front wheel and tire assembly.
(4) Remove the brake hose banjo bolt (4) if replacing caliper (Fig. 16).
(5) Remove the caliper mounting slide pin bolts (2) (Fig. 16).
(6) Remove the caliper (1) from vehicle.

REAR

(1) Install prop rod on the brake pedal to keep pressure on the brake system.
(2) Raise and support vehicle.
(3) Remove the wheel and tire assembly.
(4) Remove the brake hose banjo bolt (3) if replacing caliper.
(5) Remove the caliper mounting slide pin bolts (2) (Fig. 17).
(6) Remove the caliper from vehicle.

DISASSEMBLY

(1) Remove brake shoes from caliper.
(2) Drain brake fluid out of caliper.
(3) Take a piece of wood and pad it with one-inch thickness of shop towels. Place this piece in the outboard shoe side of the caliper in front of the piston. This will cushion and protect caliper piston during removal (Fig. 18).

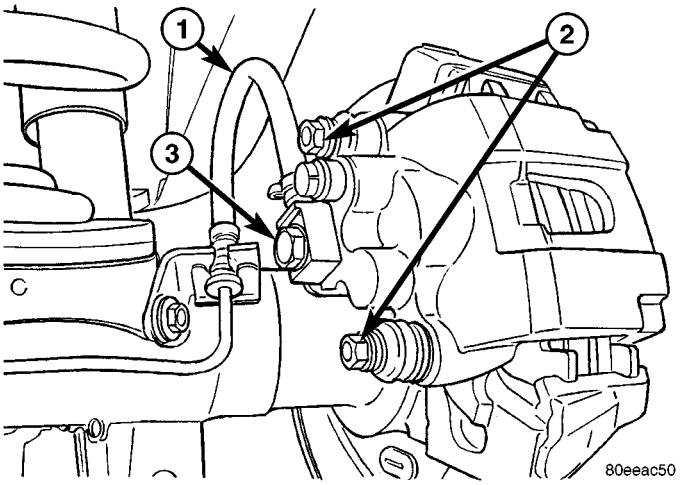

Fig. 17 CALIPER MOUNTING

1 - BRAKE HOSE
2 - CALIPER MOUNTING BOLTS
3 - BANJO BOLT

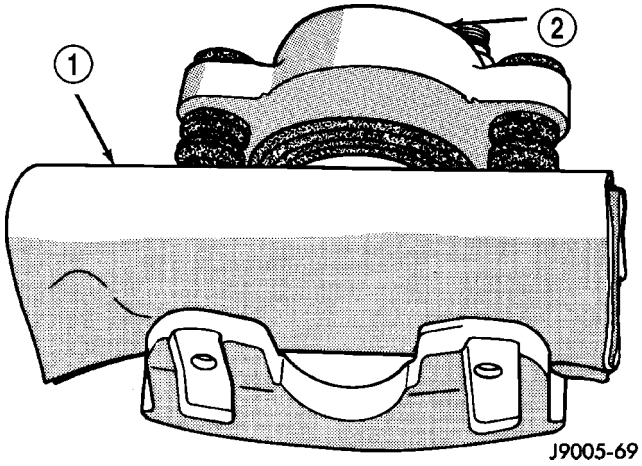

Fig. 18 PADDING CALIPER INTERIOR - TYPICAL

1 - SHOP TOWELS OR CLOTHS
2 - CALIPER

(4) Remove caliper piston with **short bursts** of low pressure compressed air. Direct air through fluid inlet port and ease piston out of bore (Fig. 19).

CAUTION: Do not blow the piston out of the bore with sustained air pressure. This could result in a cracked piston. Use only enough air pressure to ease the piston out.

DISC BRAKE CALIPERS (Continued)

WARNING: NEVER ATTEMPT TO CATCH THE PISTON AS IT LEAVES THE BORE. THIS MAY RESULT IN PERSONAL INJURY.

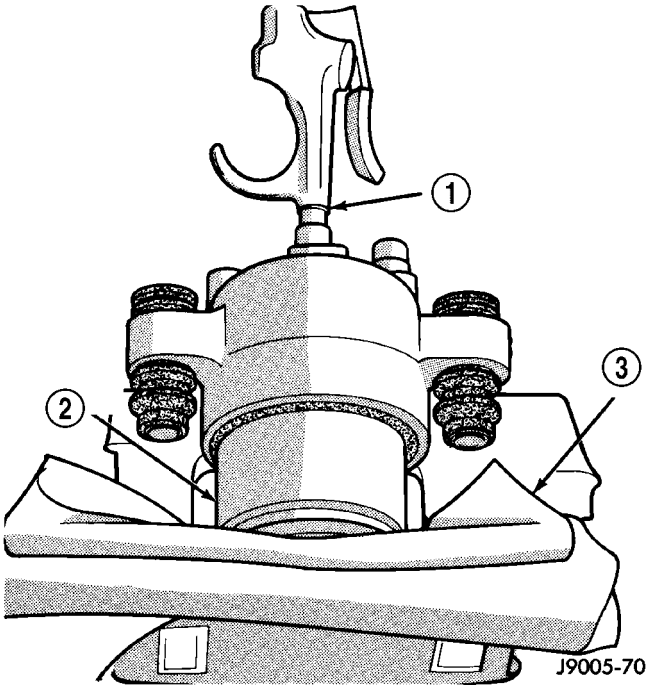

Fig. 19 CALIPER PISTON REMOVAL - TYPICAL

1 - AIR GUN
2 - CALIPER PISTON
3 - PADDING MATERIAL

(5) Remove caliper piston dust boot with suitable pry tool (Fig. 20).

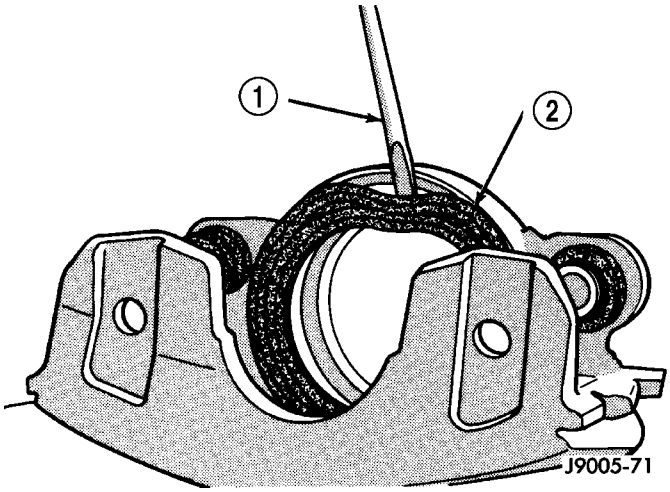

Fig. 20 CALIPER PISTON DUST BOOT REMOVAL - TYPICAL

1 - COLLAPSE BOOT WITH PUNCH OR SCREWDRIVER
2 - PISTON DUST BOOT

(6) Remove caliper piston seal with wood or plastic tool (Fig. 21). Do not use metal tools as they will scratch piston bore.

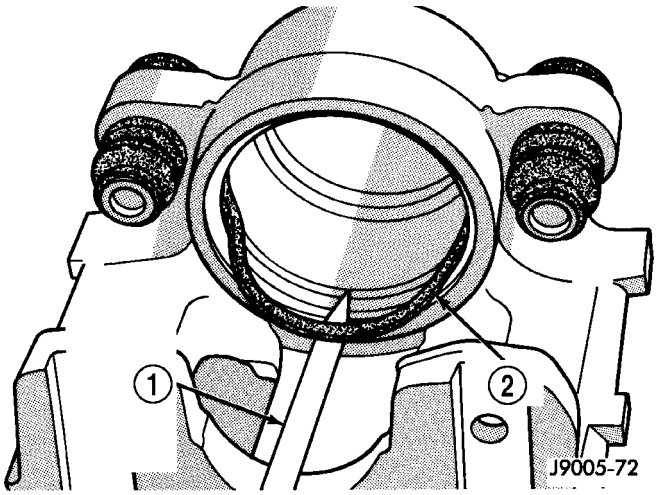

Fig. 21 PISTON SEAL REMOVAL - TYPICAL

1 - REMOVE SEAL WITH WOOD PENCIL OR SIMILAR TOOL
2 - PISTON SEAL

(7) Remove caliper mounting bolt bushings and boots (Fig. 22).

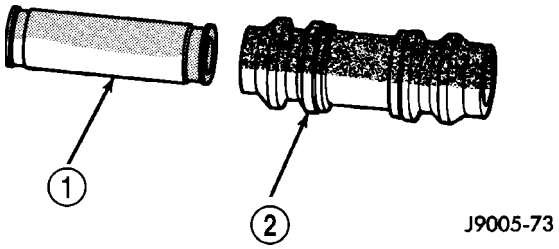

Fig. 22 MOUNTING BOLT BUSHING AND BOOT - TYPICAL

1 - CALIPER SLIDE BUSHING
2 - BOOT

CLEANING

Clean the caliper components with clean brake fluid or brake clean only. Wipe the caliper and piston dry with lint free towels or use low pressure compressed air.

CAUTION: Do not use gasoline, kerosene, thinner, or similar solvents. These products may leave a residue that could damage the piston and seal.

INSPECTION

The piston is made from a phenolic resin (plastic material) and should be smooth and clean.

The piston must be replaced if cracked or scored. Do not attempt to restore a scored piston surface by sanding or polishing.

DISC BRAKE CALIPERS (Continued)

CAUTION: If the caliper piston is replaced, install the same type of piston in the caliper. Never interchange phenolic resin and steel caliper pistons. The pistons, seals, seal grooves, caliper bore and piston tolerances are different.

The bore can be **lightly** polished with a brake hone to remove very minor surface imperfections (Fig. 23). The caliper should be replaced if the bore is severely corroded, rusted, scored, or if polishing would increase bore diameter more than 0.025 mm (0.001 inch).

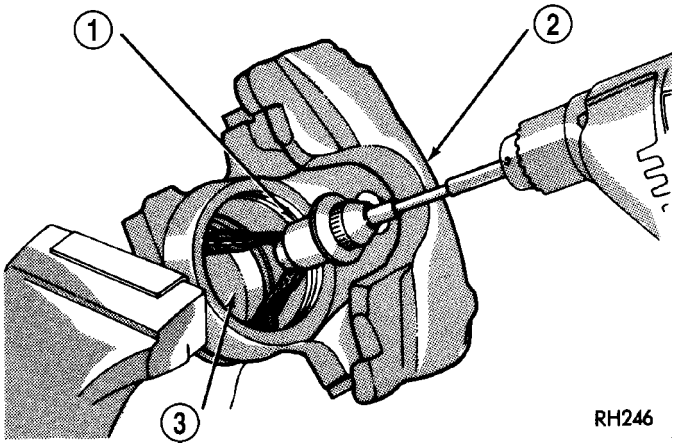

Fig. 23 POLISHING PISTON BORE - TYPICAL

1 - SPECIAL HONE
2 - CALIPER
3 - PISTON BORE

ASSEMBLY

CAUTION: Dirt, oil, and solvents can damage caliper seals. Insure assembly area is clean and dry.

(1) Lubricate caliper piston bore, new piston seal and piston with clean brake fluid.

(2) Lubricate caliper bushings and interior of bushing boots with silicone grease.

(3) Install bushing boots in caliper, then insert bushing into boot and push bushing into place (Fig. 24).

(4) Install new piston seal into seal groove with finger (Fig. 25).

(5) Install new dust boot on caliper piston and seat boot in piston groove (Fig. 26).

(6) Press piston into caliper bore by hand, use a turn and push motion to work piston into seal (Fig. 27).

(7) Press caliper piston to bottom of bore.

(8) Seat dust boot in caliper with Installer Tool C-4842 and Tool Handle C-4171 (Fig. 28).

(9) Replace caliper bleed screw if removed.

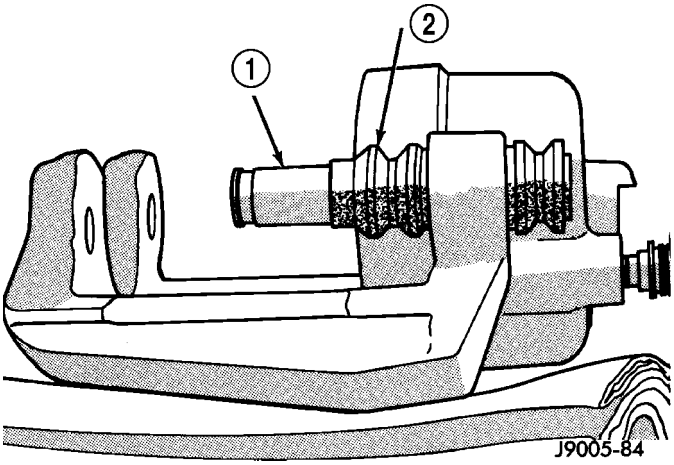

Fig. 24 BUSHINGS AND BOOTS INSTALLATION - TYPICAL

1 - BUSHING
2 - BOOT

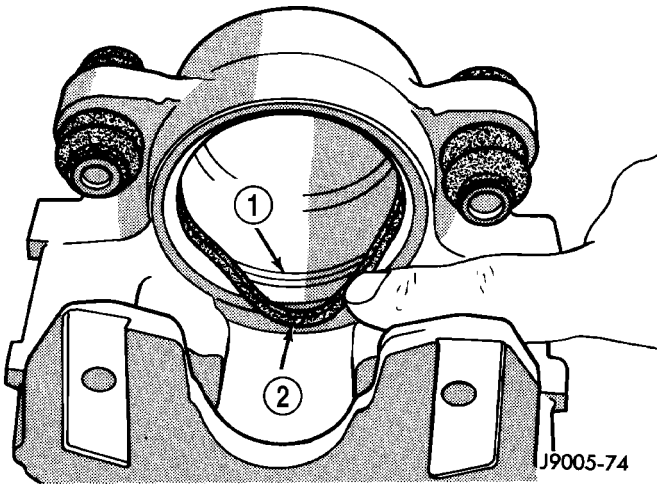

Fig. 25 PISTON SEAL INSTALLATION - TYPICAL

1 - SEAL GROOVE
2 - PISTON SEAL

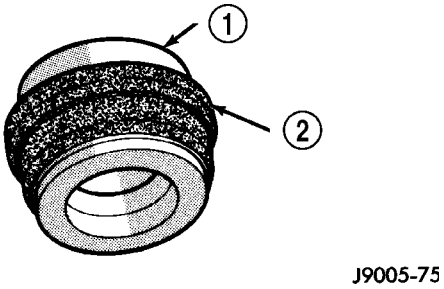

Fig. 26 DUST BOOT ON PISTON - TYPICAL

1 - PISTON
2 - DUST BOOT

DISC BRAKE CALIPERS (Continued)

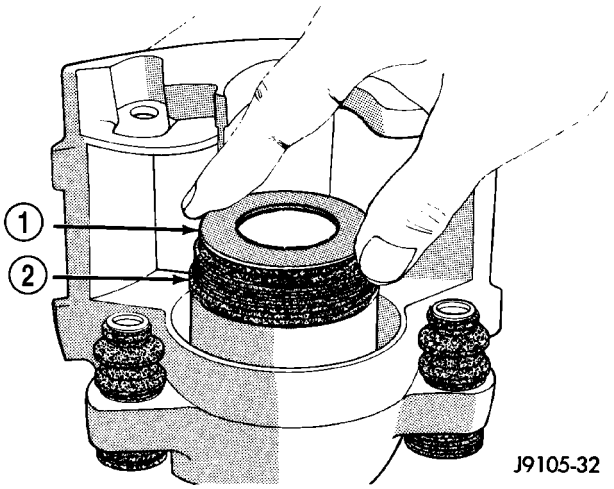

Fig. 27 CALIPER PISTON INSTALLATION - TYPICAL

1 - PISTON
2 - BOOT

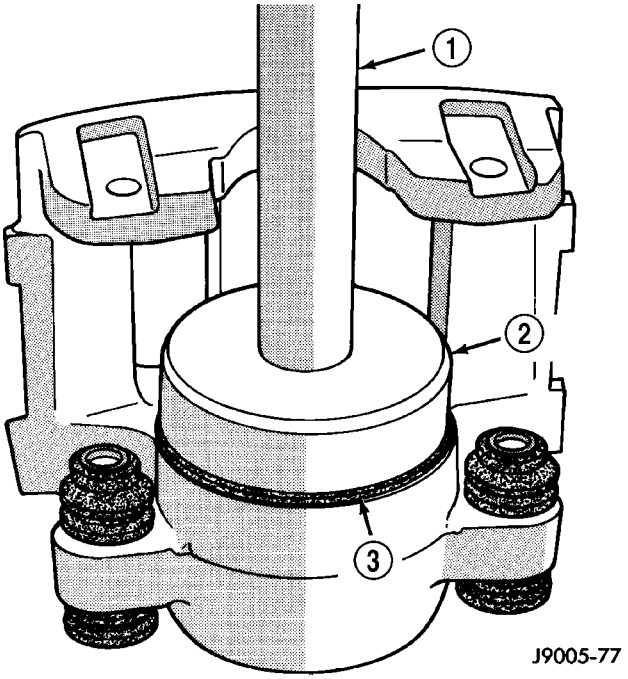

Fig. 28 PISTON DUST BOOT INSTALLATION - TYPICAL

1 - HANDLE C-4171
2 - INSTALLER C-4842
3 - DUST BOOT

INSTALLATION

FRONT

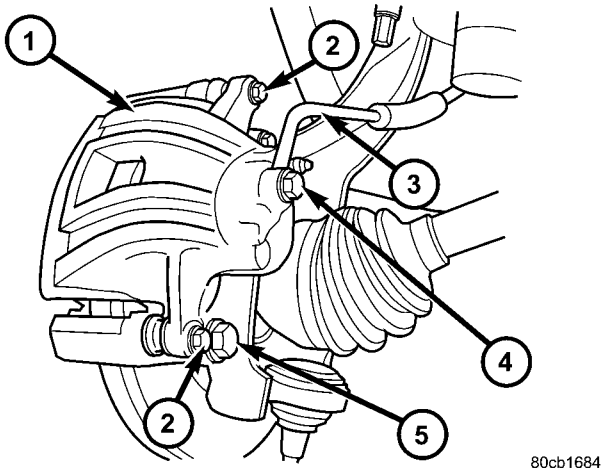

Fig. 29 DISC BRAKE CALIPER

1 - DISC BRAKE CALIPER
2 - CALIPER SLIDE MOUNTING BOLTS
3 - BRAKE HOSE
4 - BANJO BOLT
5 - CALIPER ADAPTER MOUNTING BOLT

(1) Install caliper (1) to the caliper adapter.

(2) Coat the caliper mounting slide pin bolts (2) with silicone grease. Begin with the bolt closet to the bleeder screws (top), Then install and tighten the bolts to 15 N·m (11 ft. lbs.).

(3) Install the brake hose banjo bolt (4) if removed (Fig. 29).

CAUTION: Verify brake hose is not twisted or kinked before tightening fitting bolt.

(4) Install the brake hose (3) to the caliper (1) with **new seal washers** and tighten fitting bolt to 31 N·m (23 ft. lbs.).

(5) Remove the prop rod from the vehicle.

(6) Bleed the base brake system, (Refer to 5 - BRAKES - STANDARD PROCEDURE) OR (Refer to 5 - BRAKES - STANDARD PROCEDURE).

(7) Install the wheel and tire assemblies (Refer to 22 - TIRES/WHEELS/WHEELS - STANDARD PROCEDURE).

(8) Remove the supports and lower the vehicle.

(9) Verify a firm pedal before moving the vehicle.

DISC BRAKE CALIPERS (Continued)

REAR

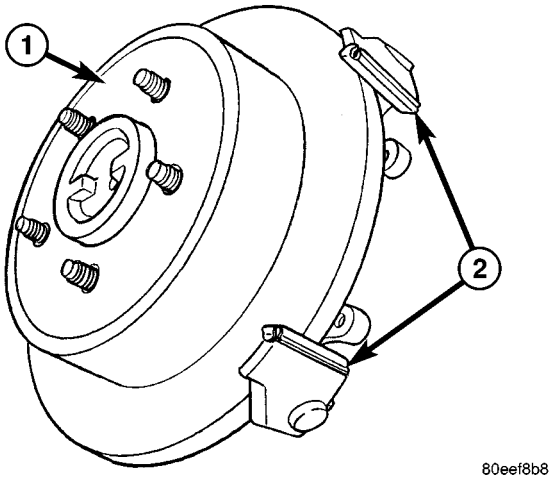

Fig. 30 ANTI-RATTLE CLIPS

1 - ROTOR
2 - ANTI-RATTLE CLIPS

(1) Install the brake pads if removed.

(2) Lubricate ant-rattle clips (2) for the disc brake pads (Fig. 30).

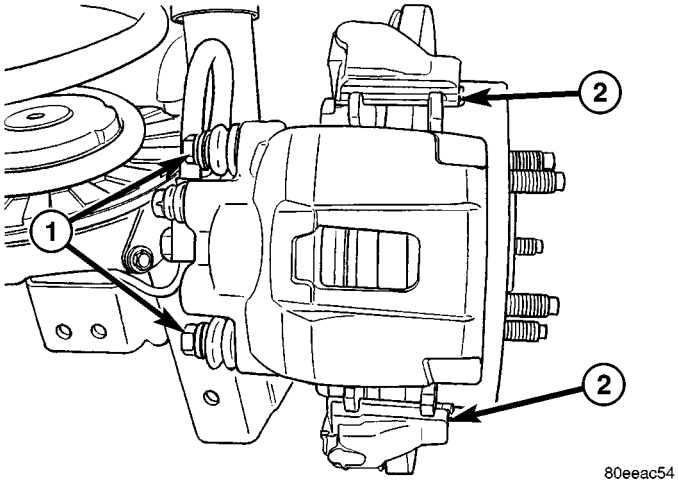

Fig. 31 CALIPER INSTALLED

1 - CALIPER MOUNTING BOLTS
2 - CALIPER SLIDES

(3) Install caliper to the caliper adapter.

(4) Coat the caliper mounting slide pin bolts (1) with silicone grease. Then install and tighten the bolts to 15 N·m (11 ft. lbs.).

(5) Install the brake hose banjo bolt if removed (Fig. 31).

CAUTION: Verify brake hose is not twisted or kinked before tightening fitting bolt.

(6) Install the brake hose to the caliper with **new seal washers** and tighten fitting bolt to 31 N·m (23 ft. lbs.).

(7) Remove the prop rod from the vehicle.

(8) Bleed the base brake system, (Refer to 5 - BRAKES - STANDARD PROCEDURE) OR (Refer to 5 - BRAKES - STANDARD PROCEDURE).

(9) Install the wheel and tire assemblies (Refer to 22 - TIRES/WHEELS/WHEELS - STANDARD PROCEDURE).

(10) Remove the supports and lower the vehicle.

(11) Verify a firm pedal before moving the vehicle.

DISC BRAKE CALIPER ADAPTER

REMOVAL

(1) Raise and support the vehicle.

(2) Remove the front wheel and tire assembly.

(3) Drain a small amount of fluid from master cylinder brake reservoir with a **clean** suction gun.

(4) Bottom the caliper pistons into the caliper by prying the caliper over.

(5) Remove the caliper mounting bolts (Fig. 16).

(6) Remove the disc brake caliper from the mount.

CAUTION: Never allow the disc brake caliper to hang from the brake hose. Damage to the brake hose will result. Provide a suitable support to hang the caliper securely.

(7) Remove the inboard and outboard brake pads. (Refer to 5 - BRAKES/HYDRAULIC/MECHANICAL/BRAKE PADS/SHOES - REMOVAL).

(8) Remove the caliper adapter mounting bolts (Fig. 16).

INSTALLATION

(1) Install the caliper adapter mounting bolts. Tighten the mounting bolts to 135 N·m (100 ft.lbs).

(2) Install the inboard and outboard pads. (Refer to 5 - BRAKES/HYDRAULIC/MECHANICAL/BRAKE PADS/SHOES - INSTALLATION).

(3) Install the caliper mounting bolts.

(4) Install the tire and wheel assembly. (Refer to 22 - TIRES/WHEELS/WHEELS - STANDARD PROCEDURE).

ROTORS

DIAGNOSIS AND TESTING

DIAGNOSIS AND TESTING - DISC BRAKE ROTOR

The rotor braking surfaces should not be refinished unless necessary.

Light surface rust and scale can be removed with a lathe equipped with dual sanding discs. The rotor surfaces can be restored by machining in a disc brake lathe if surface scoring and wear are light.

Replace the rotor under the following conditions:

- severely scored
- tapered
- hard spots
- cracked
- below minimum thickness

ROTOR MINIMUM THICKNESS

Measure rotor thickness at the center of the brake shoe contact surface. Replace the rotor if worn below minimum thickness, or if machining would reduce thickness below the allowable minimum.

Rotor minimum thickness is usually specified on the rotor hub. The specification is either stamped or cast into the hub surface.

ROTOR RUNOUT

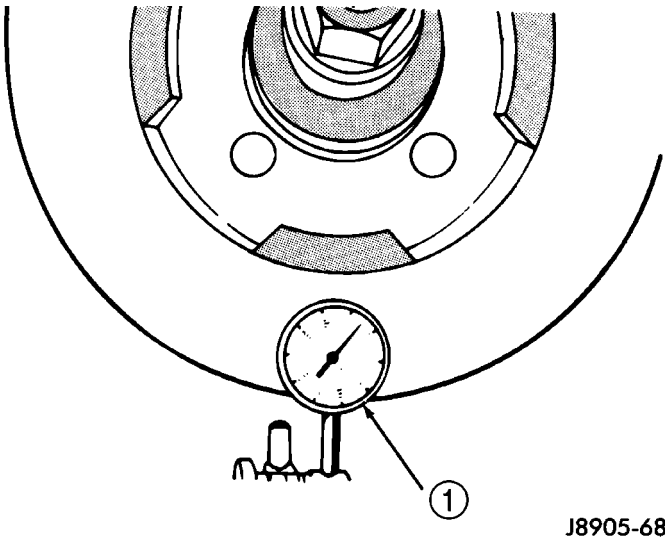

Fig. 32 Checking Rotor Runout And Thickness Variation

1 - DIAL INDICATOR

Check rotor lateral runout with dial indicator C-3339 (1) (Fig. 32). Excessive lateral runout will cause brake pedal pulsation and rapid, uneven wear of the brake shoes. Position the dial indicator plunger approximately 25.4 mm (1 in.) inward from the rotor edge. The dial indicator should be positioned in the center of the rotor surface. Maximum allowable rotor runout is 0.102 mm (0.004 in.).

ROTOR THICKNESS VARIATION

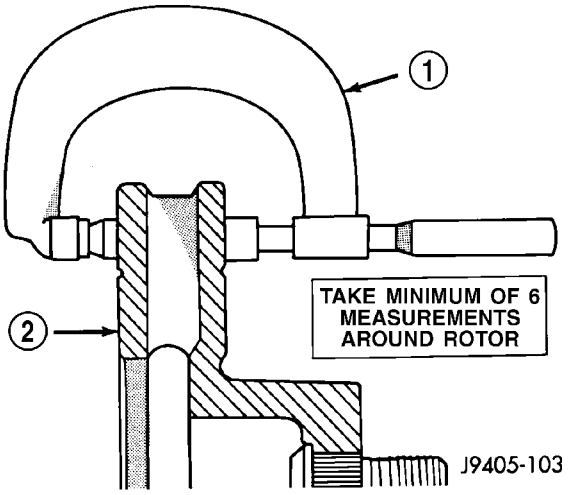

Fig. 33 Measuring Rotor Thickness

1 - MICROMETER
2 - ROTOR

Variations in rotor thickness will cause pedal pulsation, noise and shudder.

Measure rotor thickness at 6 to 12 points around the rotor face (Fig. 33).

Position the micrometer (1) approximately 25.4 mm (1 in.) from the rotor (2) outer circumference for each measurement.

Thickness should not **vary** by more than 0.013 mm (0.0005 in.) from point-to-point on the rotor. Machine or replace the rotor if necessary.

DIAGNOSIS AND TESTING - BRAKE DRUM IN HAT ROTOR

The maximum allowable diameter of the drum braking surface is indicated on the drum outer edge. Always replace the drum if machining would cause drum diameter to exceed the size limit indicated on the drum in hat.

BRAKE DRUM RUNOUT

Measure drum diameter and runout with an accurate gauge. The most accurate method of measurement involves mounting the drum in a brake lathe and checking variation and runout with a dial indicator.

Machine the drum if runout or variation exceed values. Replace the drum in hat rotor if machining

ROTORS (Continued)

causes the drum in hat rotor to exceed the maximum allowable diameter.

STANDARD PROCEDURE

STANDARD PROCEDURE - DISC BRAKE ROTOR

The disc brake rotor can be machined if scored or worn. The lathe must machine both sides of the rotor simultaneously with dual cutter heads. The rotor mounting surface must be clean before placing on the lathe. Equipment capable of machining only one side at a time may produce a tapered rotor. A hub mounted on-vehicle lathe is recommended. This type of lathe trues the rotor to the vehicles hub/bearing.

CAUTION: Brake rotors that do not meet minimum thickness specifications before or after machining must be replaced.

STANDARD PROCEDURE - BRAKE DRUM IN HAT ROTOR MACHINING

The brake drum in hat rotor can be machined on a drum lathe when necessary. Initial machining cuts should be limited to 0.12 - 0.20 mm (0.005 - 0.008 in.) at a time as heavier feed rates can produce taper and surface variation. Final finish cuts of 0.025 to 0.038 mm (0.001 to 0.0015 in.) are recommended and will generally provide the best surface finish.

Be sure the drum in hat rotor is securely mounted in the lathe before machining operations. A damper strap should always be used around the drum to reduce vibration and avoid chatter marks.

The maximum allowable diameter of the drum braking surface is stamped or cast into the drum in hat rotor.

CAUTION: Replace the drum in hat rotor if machining will cause the drum to exceed the maximum allowable diameter.

REMOVAL

FRONT

(1) Raise and support the vehicle.
(2) Remove the tire and wheel assembly.

CAUTION: Never allow the disc brake caliper to hang from the brake hose. Damage to the brake hose will result. Provide a suitable support to hang the caliper securely.

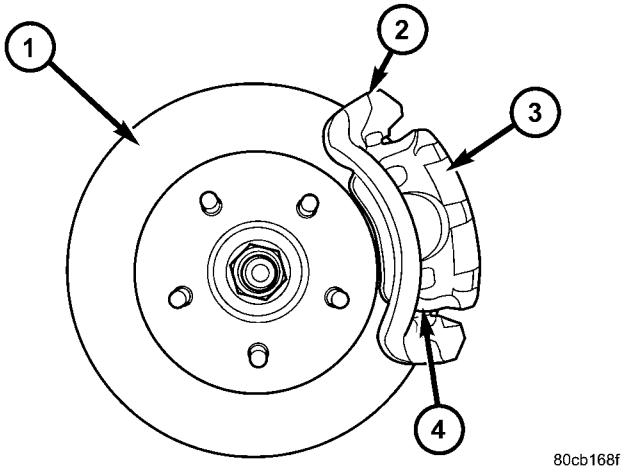

Fig. 34 DISC BRAKE ROTOR

1 - DISC BRAKE ROTOR
2 - CALIPER ADAPTER
3 - DISC BRAKE CALIPER
4 - SHOES

(3) Remove the caliper adapter (2) (Fig. 34). (Refer to 5 - BRAKES/HYDRAULIC/MECHANICAL/DISC BRAKE CALIPER ADAPTER - REMOVAL).
(4) Remove the disc brake rotor (1).

REAR

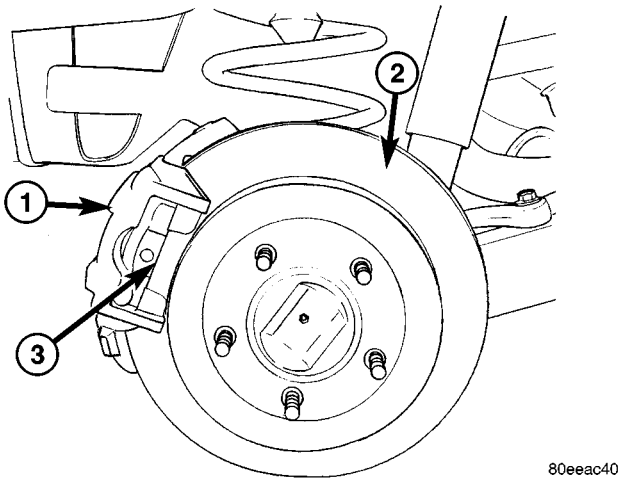

Fig. 35 ROTOR/CALIPER

1 - CALIPER
2 - ROTOR
3 - OUTBOARD DISC BRAKE PAD

(1) Raise and support the vehicle
(2) Remove the tire and wheel assembly (Fig. 35).
(3) Remove the disc brake caliper (1) and pads (3), (Refer to 5 - BRAKES/HYDRAULIC/MECHANICAL/DISC BRAKE CALIPERS - REMOVAL) (Fig. 35).
(4) Remove the retianing clips and rotor assembly.

ROTORS (Continued)

INSTALLATION

FRONT

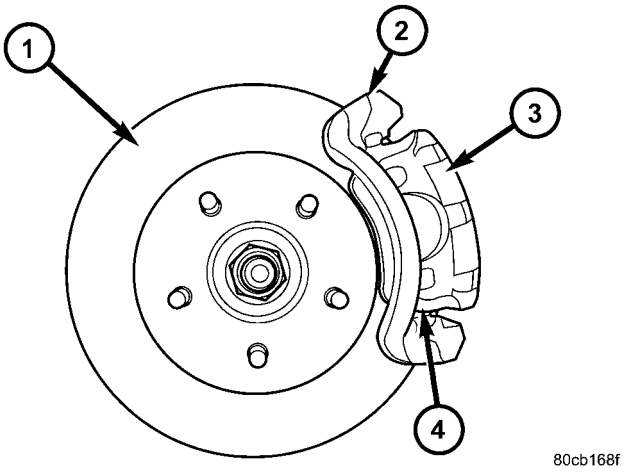

Fig. 36 DISC BRAKE ROTOR

1 - DISC BRAKE ROTOR
2 - CALIPER ADAPTER
3 - DISC BRAKE CALIPER
4 - SHOES

(1) Install the disc brake rotor (1) to the hub.

(2) Install the caliper mounting adapter (2) (Fig. 36). (Refer to 5 - BRAKES/HYDRAULIC/MECHANICAL/DISC BRAKE CALIPER ADAPTER - INSTALLATION).

(3) Install the tire and wheel assembly. (Refer to 22 - TIRES/WHEELS/WHEELS - STANDARD PROCEDURE).

REAR

(1) Install the rotor (2) to the axleshaft.

(2) Install the disc brake caliper (3) and pads (Fig. 37), (Refer to 5 - BRAKES/HYDRAULIC/MECHANICAL/DISC BRAKE CALIPERS - INSTALLATION).

(3) Install the tire and wheel assembly (Refer to 22 - TIRES/WHEELS/WHEELS - STANDARD PROCEDURE).

(4) Lower the vehicle.

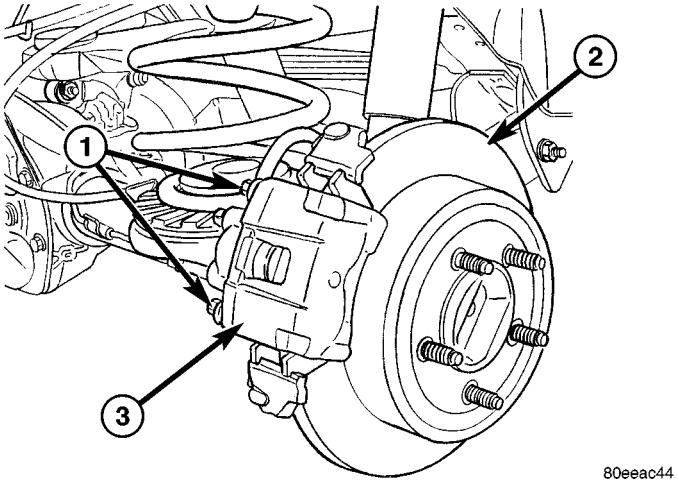

Fig. 37 ROTOR

1 - CALIPER MOUNTING BOLTS
2 - ROTOR
3 - CALIPER

BRAKE JUNCTION BLOCK

DESCRIPTION

The junction block contains a pressure differential valve and a rear brake proportioning valve. The valves are not repairable and must be replaced as an assembly if diagnosis indicates this is necessary.

OPERATION

PROPORTIONING VALVE

The proportioning valve is used to balance front-rear brake action at high decelerations. The valve allows normal fluid flow during moderate braking. The valve only controls fluid flow during high decelerations brake stops. If the primary brake hydraulic circuit cannot build pressure a by-pass feature is activated allowing full flow and pressure to the rear brakes.

DIAGNOSIS AND TESTING - PROPORTIONING VALVE

The valve controls fluid flow. If fluid enters the valve and does not exit the valve the combination valve must be replaced.

BRAKE JUNCTION BLOCK (Continued)

REMOVAL

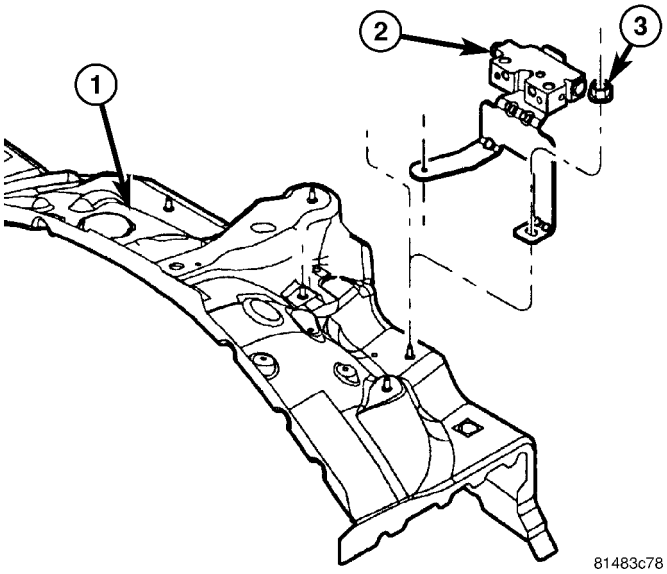

Fig. 38 JUNCTION BLOCK

1 - INNER FENDER
2 - JUNCTION BLOCK
3 - MOUNTING NUT

(1) Install prop rod on the brake pedal to keep pressure on the brake system.

(2) Remove the brake lines from the junction block (2).

(3) Remove mounting nuts (3) and remove the junction block (3) (Fig. 38).

INSTALLATION

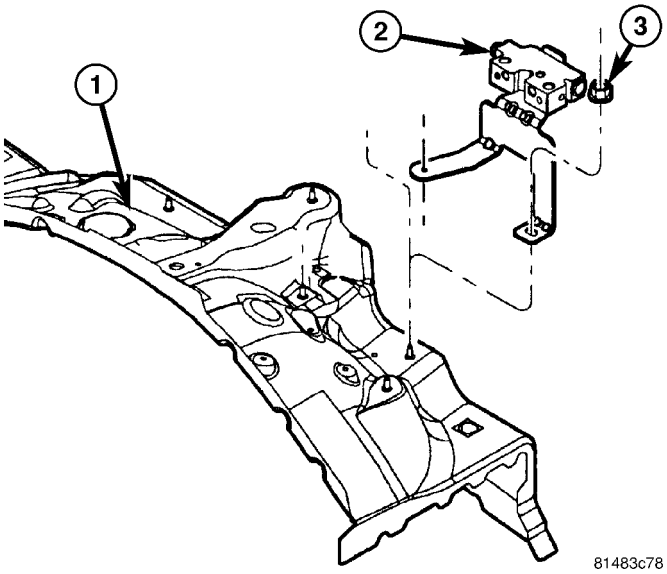

Fig. 39 JUNCTION BLOCK

1 - INNER FENDER
2 - JUNCTION BLOCK
3 - MOUNTING NUT

(1) Install the junction block (2) on the mounting studs.

(2) Install mounting nuts (3). Tighten to 14 N·m (125 in. lbs.).

(3) Install brake lines to the junction block (2) and tighten to 20 N·m (180 in. lbs.) (Fig. 39).

(4) Bleed the brake system (Refer to 5 - BRAKES - STANDARD PROCEDURE).

PEDAL

DESCRIPTION

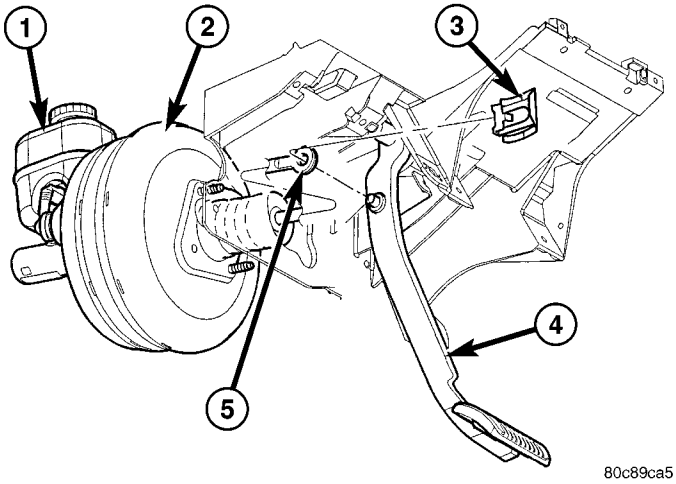

Fig. 40 BOOSTER PUSH ROD

1 - MASTER CYLINDER ASSEMBLY
2 - BRAKE BOOSTER
3 - CLIP
4 - BRAKE PEDAL
5 - BOOSTER ROD

A suspended-type brake pedal (4) is used, the pedal pivots on a shaft mounted in the steering coloumn support bracket. The bracket is attached to the dash panel. The unit is serviced as an assembly, except for the pedal pad (Fig. 40).

PEDAL (Continued)

OPERATION

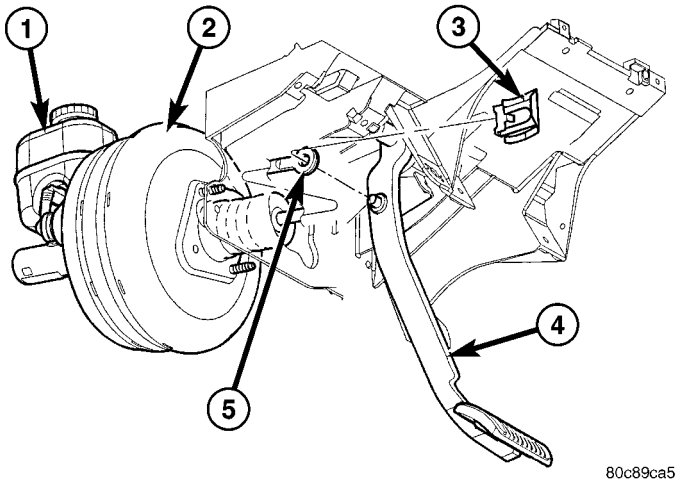

Fig. 41 BOOSTER PUSH ROD

1 - MASTER CYLINDER ASSEMBLY
2 - BRAKE BOOSTER
3 - CLIP
4 - BRAKE PEDAL
5 - BOOSTER ROD

The brake pedal(4) is attached to the booster push rod (5). When the pedal is depressed, the primary booster push rod (5) is depressed which move the booster secondary rod. The booster secondary rod depress the master cylinder piston (1) (Fig. 41).

REMOVAL

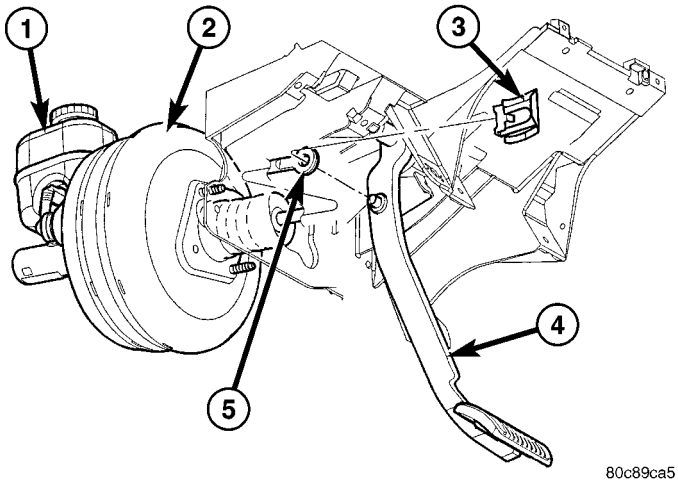

Fig. 42 BOOSTER PUSH ROD

1 - MASTER CYLINDER ASSEMBLY
2 - BRAKE BOOSTER
3 - CLIP
4 - BRAKE PEDAL
5 - BOOSTER ROD

(1) Remove the knee blocker under the steering column, (Refer to 23 - BODY/INSTRUMENT PANEL/ KNEE BLOCKER - REMOVAL).

(2) Remove the retainer clip securing the booster push rod (5) to pedal (4) (Fig. 42).

(3) Remove the brake lamp switch, (Refer to 8 - ELECTRICAL/LAMPS/LIGHTING - EXTERIOR/ BRAKE LAMP SWITCH - REMOVAL).

(4) Remove the nuts securing the pedal to the column bracket.

(5) Remove the pedal from the vehicle.

INSTALLATION

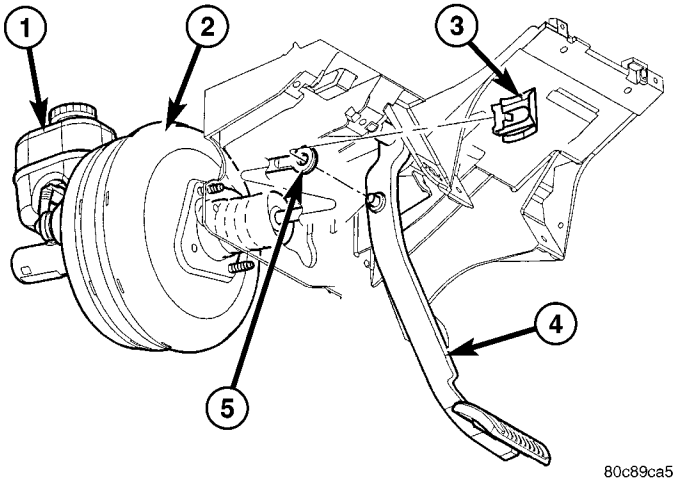

Fig. 43 BOOSTER PUSH ROD

1 - MASTER CYLINDER ASSEMBLY
2 - BRAKE BOOSTER
3 - CLIP
4 - BRAKE PEDAL
5 - BOOSTER ROD

(1) Install the pedal (4) into the vehicle.

(2) Install the nuts securing the pedal to the column bracket.

(3) Tighten the nuts to 22.6 N·m (200 in. lbs.).

(4) Lubricate the brake pedal pin and bushings with Mopar multi-mileage grease.

(5) Install the booster push rod (5) on the pedal pin and install a new retainer clip (Fig. 43).

(6) Install the brake lamp switch, (Refer to 8 - ELECTRICAL/LAMPS/LIGHTING - EXTERIOR/ BRAKE LAMP SWITCH - INSTALLATION).

(7) Install the knee blocker, (Refer to 23 - BODY/ INSTRUMENT PANEL/KNEE BLOCKER - INSTALLATION).

POWER BRAKE BOOSTER

DESCRIPTION

The booster assembly consists of a housing divided into separate chambers by two internal diaphragms. The outer edge of each diaphragm is attached to the booster housing. The diaphragms are connected to the booster primary push rod.

POWER BRAKE BOOSTER (Continued)

Two push rods are used in the booster. The primary push rod connects the booster to the brake pedal. The secondary push rod connects the booster to the master cylinder to stroke the cylinder pistons.

The booster assembly is of the tie-bar design. This means the structural support of the assembly is through the tie-bars, whose ends protrude through the booster shell. One end is the master cylinder mounting stud and the other end is the booster mounting stud. The booster assembly (with properly functioning check valve installed) may not have a good vacuum seal unless the booster is installed on the dash panel mounting bracket with master cylinder and booster mounting nuts properly torqued.

OPERATION

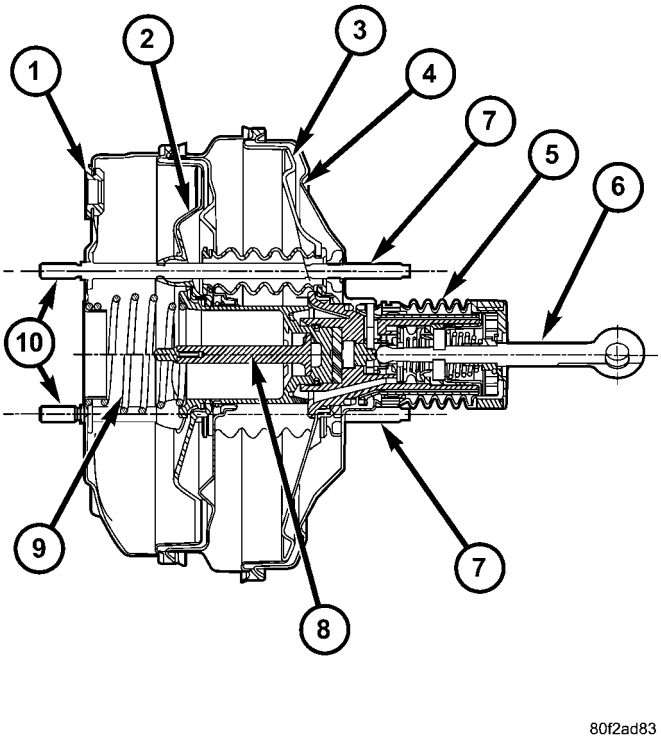

Fig. 44 POWER BRAKE BOOSTER CUT AWAY

1 - VACUUM CHECK VALVE
2 - FRONT DIAPHRAGM
3 - REAR DIAGHRAGM
4 - HOUSING
5 - SEAL
6 - PRIMARY PUSH ROD (TO BRAKE PEDAL)
7 - BOOSTER MOUNTING STUDS
8 - SECONDARY PUSH ROD (TO MASTER CYLINDER)
9 - SPRING
10 - MASTER CYLINDER MOUNTING STUDS

The atmospheric inlet valve is opened and closed by the primary push rod (6). Booster vacuum supply is through a hose attached to an intake manifold fitting at one end and to the booster check valve (1) at the other. The vacuum check valve (1) in the booster housing (4) is a one-way device that prevents vacuum leak back.

Power assist is generated by utilizing the pressure differential between normal atmospheric pressure and a vacuum. The vacuum needed for booster operation is taken directly from the engine intake manifold. The entry point for atmospheric pressure is through a filter and inlet valve at the rear of the housing (Fig. 44).

The chamber areas forward of the booster diaphragms are exposed to vacuum from the intake manifold. The chamber areas to the rear of the diaphragms, are exposed to normal atmospheric pressure of 101.3 kilopascals (14.7 pounds/square in.).

Brake pedal application causes the primary push rod to open the atmospheric inlet valve. This exposes the area behind the diaphragms to atmospheric pressure. The resulting pressure differential provides the extra apply force for power assist.

The booster check valve, check valve grommet and booster seals are serviceable.

DIAGNOSIS AND TESTING - MASTER CYLINDER/POWER BOOSTER

(1) Start engine and check booster vacuum hose connections. A hissing noise indicates vacuum leak. Correct any vacuum leak before proceeding, also ensure booster mounting nuts are torqued correctly.

(2) Stop engine and shift transmission into Neutral.

(3) Pump brake pedal until all vacuum reserve in booster is depleted.

(4) Press and hold brake pedal under light foot pressure. The pedal should hold firm, if the pedal falls away master cylinder is faulty (internal leakage).

(5) Start engine and note pedal action. It should fall away slightly under light foot pressure then hold firm. If no pedal action is discernible, power booster, vacuum supply, or vacuum check valve is faulty. Proceed to the POWER BOOSTER VACUUM TEST.

(6) If the POWER BOOSTER VACUUM TEST passes, rebuild booster vacuum reserve as follows: Release brake pedal. Increase engine speed to 1500 rpm, close the throttle and immediately turn off ignition to stop engine.

(7) Wait a minimum of 90 seconds and try brake action again. Booster should provide two or more vacuum assisted pedal applications. If vacuum assist is not provided, booster is faulty.

POWER BOOSTER VACUUM TEST

(1) Connect vacuum gauge to booster check valve with short length of hose and T-fitting (Fig. 45).

(2) Start and run engine at curb idle speed for one minute.

POWER BRAKE BOOSTER (Continued)

(3) Observe the vacuum supply. If vacuum supply is not adequate, repair vacuum supply.

(4) Clamp hose shut between vacuum source and check valve.

(5) Stop engine and observe vacuum gauge.

(6) If vacuum drops more than one inch Hg (33 millibars) within 15 seconds, booster diaphragm or check valve is faulty.

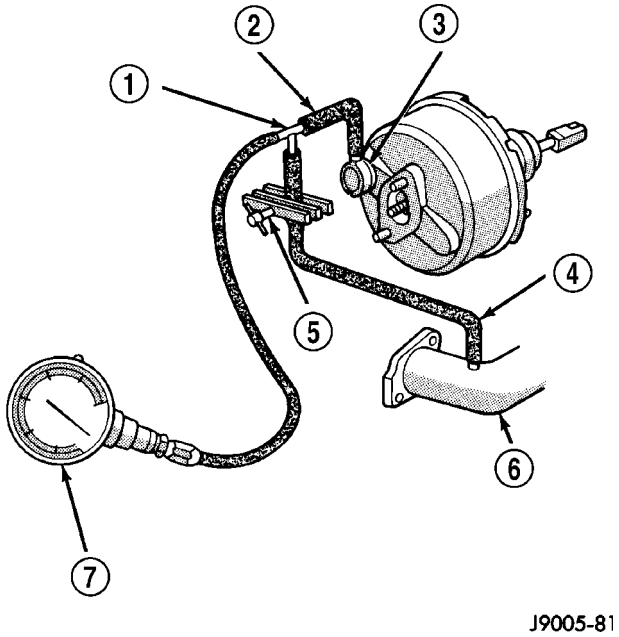

Fig. 45 Typical Booster Vacuum Test Connections

1 - TEE FITTING
2 - SHORT CONNECTING HOSE
3 - CHECK VALVE
4 - CHECK VALVE HOSE
5 - CLAMP TOOL
6 - INTAKE MANIFOLD
7 - VACUUM GAUGE

POWER BOOSTER CHECK VALVE TEST

(1) Disconnect vacuum hose from check valve.

(2) Remove check valve and valve seal from booster.

(3) Use a hand operated vacuum pump for test.

(4) Apply 15-20 inches vacuum at large end of check valve (Fig. 46).

(5) Vacuum should hold steady. If gauge on pump indicates vacuum loss, check valve is faulty and should be replaced.

REMOVAL

LEFT HAND DRIVE (LHD)

(1) Disconnect the wire to the fluid level switch at the bottom of the reservoir.

(2) Remove the master cylinder (Refer to 5 - BRAKES/HYDRAULIC/MECHANICAL/MASTER CYLINDER - REMOVAL).

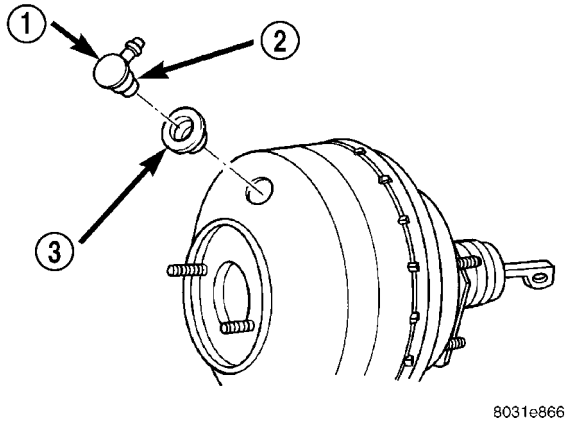

Fig. 46 TYPICAL - VACUUM CHECK VALVE AND SEAL

1 - BOOSTER CHECK VALVE
2 - APPLY TEST VACUUM HERE
3 - VALVE SEAL

(3) Disconnect vacuum hoses from booster check valve.

(4) Remove the brake lines from the master cylinder and the HCU (abs vehicles only) or the junction block for clearance.

(5) Disconnect the HCU from the mounts and move to the side for clearance of the booster.

(6) Remove knee blocker under the steering column, (Refer to 23 - BODY/INSTRUMENT PANEL/ KNEE BLOCKER - REMOVAL).

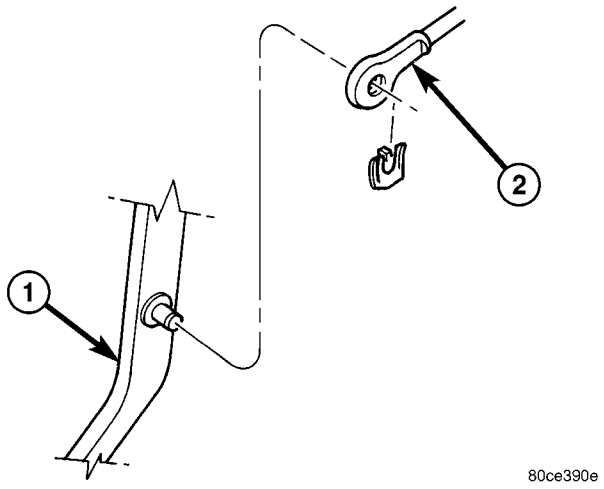

Fig. 47 BOOSTER PUSH ROD

1 - BRAKE PEDAL
2 - BOOSTER ROD

(7) Remove retaining clip that secures booster push rod (2) to brake pedal (1) (Fig. 47).

(8) Remove nuts attaching booster (1) to the dash panel (Fig. 48).

(9) In engine compartment, slide booster studs out of dash panel, tilt booster upward, and remove booster from engine compartment.

POWER BRAKE BOOSTER (Continued)

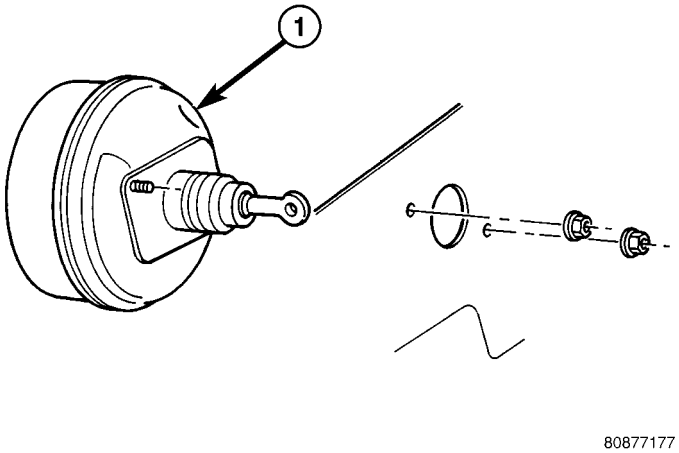

Fig. 48 BOOSTER MOUNTING

1 - BRAKE BOOSTER

RIGHT HAND DRIVE (RHD)

(1) Remove the air box (Refer to 9 - ENGINE/AIR INTAKE SYSTEM/AIR CLEANER ELEMENT - REMOVAL).

(2) Relocate the cruise control servo to gain access to the booster for removal.

(3) Remove the brake lines from the master cylinder.

(4) Remove the master cylinder (Refer to 5 - BRAKES/HYDRAULIC/MECHANICAL/MASTER CYLINDER - REMOVAL).

(5) Disconnect vacuum hose from booster check valve.

(6) Remove knee blocker under the steering column, (Refer to 23 - BODY/INSTRUMENT PANEL/ KNEE BLOCKER - REMOVAL).

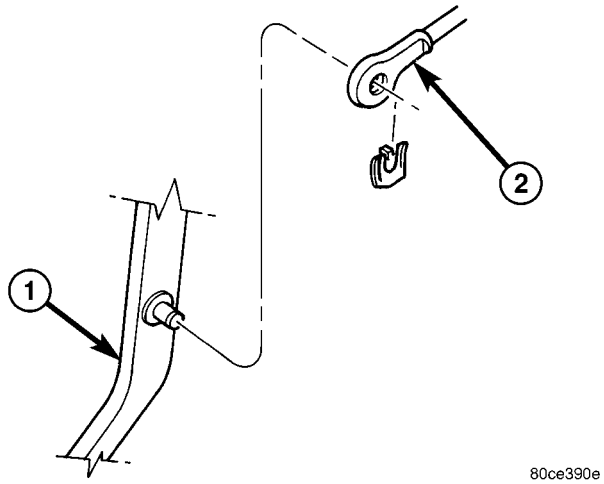

Fig. 49 BOOSTER PUSH ROD

1 - BRAKE PEDAL
2 - BOOSTER ROD

(7) Remove the brake light switch, (Refer to 8 - ELECTRICAL/LAMPS/LIGHTING - EXTERIOR/ BRAKE LAMP SWITCH - REMOVAL)

(8) Remove retaining clip that secures booster push rod (2) to brake pedal (1) (Fig. 49).

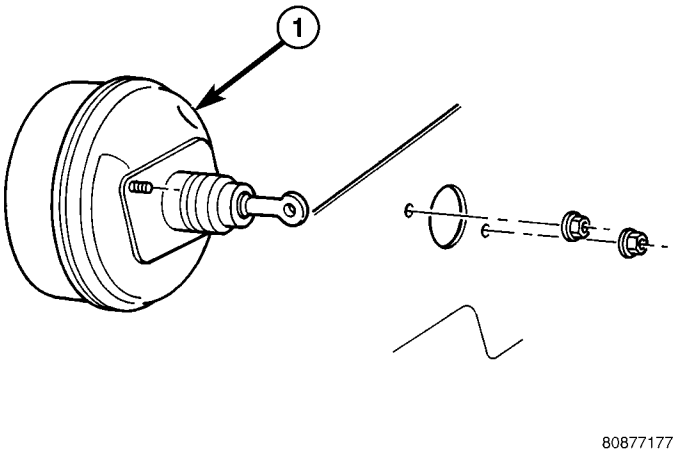

Fig. 50 BOOSTER MOUNTING

1 - BRAKE BOOSTER

(9) Remove nuts attaching booster (1) to the dash panel (Fig. 50).

(10) In engine compartment, slide booster studs out of dash panel, tilt booster upward, and remove booster from engine compartment.

INSTALLATION

LEFT HAND DRIVE (LHD)

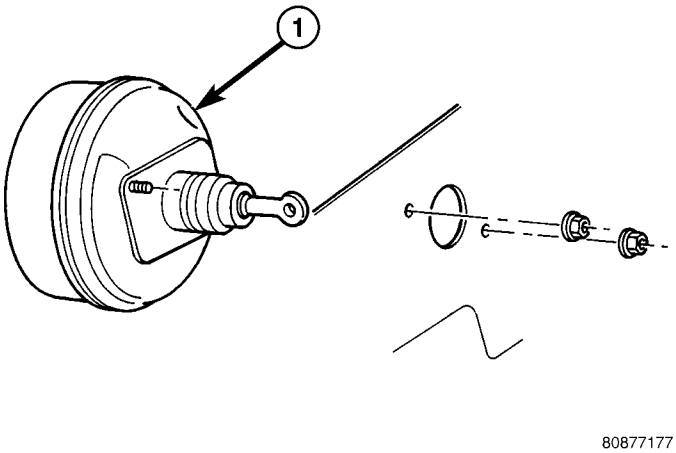

Fig. 51 BOOSTER MOUNTING

1 - BRAKE BOOSTER

(1) Align and position booster (1) on the dash panel.

POWER BRAKE BOOSTER (Continued)

(2) Install booster mounting nuts. Tighten nuts just enough to hold booster in place (Fig. 51).

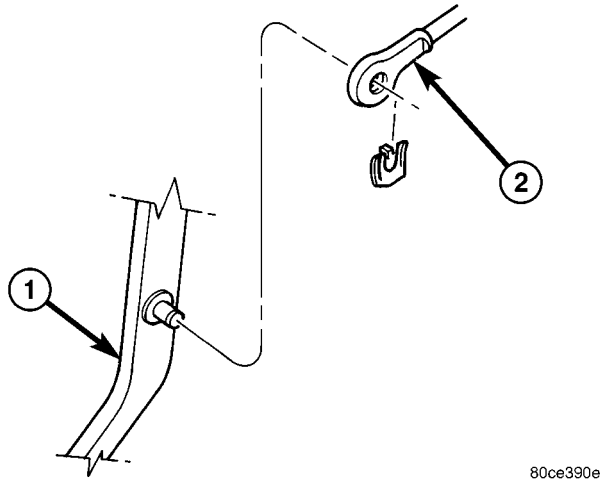

Fig. 52 BOOSTER PUSH ROD

1 - BRAKE PEDAL
2 - BOOSTER ROD

(3) Slide booster push rod (2) onto the brake pedal (1). Then secure push rod to pedal pin with retaining clip (Fig. 52).

NOTE: Lubricate the pedal pin with Mopar multi-mileage grease before installation.

(4) Tighten booster mounting nuts to 25 N·m (220 in. lbs.).

(5) Install the knee blocker, (Refer to 23 - BODY/INSTRUMENT PANEL/KNEE BLOCKER - INSTALLATION).

(6) If original master cylinder is being installed, check condition of seal at rear of master cylinder. Replace seal if cut, or torn.

(7) Clean cylinder mounting surface of brake booster. Use shop towel wetted with brake cleaner for this purpose. Dirt, grease, or similar materials will prevent proper cylinder seating and could result in vacuum leak.

(8) Align and install master cylinder on the booster studs. Install mounting nuts and tighten to 25 N·m (220 in. lbs.).

(9) Connect vacuum hose to booster check valve.

(10) Remount the HCU. Tighten bracket mounting nuts to 14 N·m (125 in. lbs.).

(11) Connect and secure the brake lines to HCU or junction block and master cylinder. Start all brake line fittings by hand to avoid cross threading.

(12) Connect the wire to fluid level switch at the bottom of the reservoir.

(13) Fill and bleed base brake system, (Refer to 5 - BRAKES - STANDARD PROCEDURE).

(14) Verify proper brake operation before moving vehicle.

RIGHT HAND DRIVE (RHD)

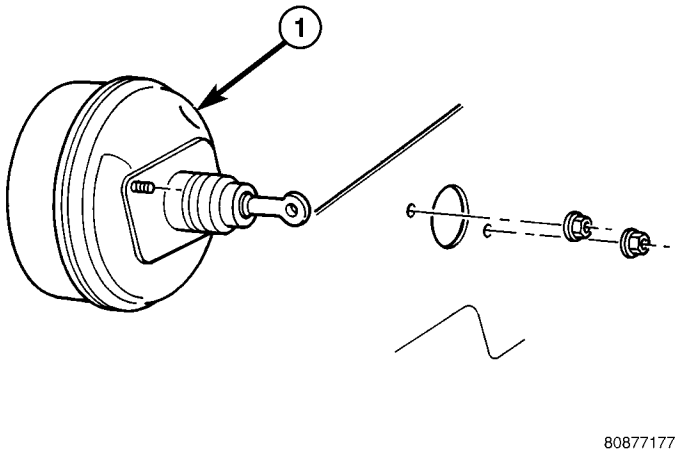

Fig. 53 BOOSTER MOUNTING

1 - BRAKE BOOSTER

(1) Align and position booster (1) on the dash panel.

(2) Install booster mounting nuts. Tighten nuts just enough to hold booster in place (Fig. 53).

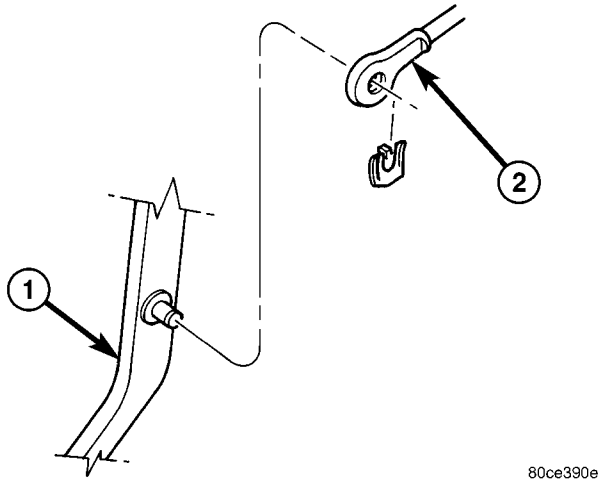

Fig. 54 BOOSTER PUSH ROD

1 - BRAKE PEDAL
2 - BOOSTER ROD

(3) Slide booster push rod (1) onto the brake pedal (2). Then secure push rod (2) to pedal pin with retaining clip (Fig. 54).

NOTE: Lubricate the pedal pin with Mopar multi-mileage grease before installation.

(4) Tighten booster mounting nuts to 39 N·m (29 ft. lbs.).

(5) Install the brake light switch.

POWER BRAKE BOOSTER (Continued)

(6) Install the knee blocker, (Refer to 23 - BODY/ INSTRUMENT PANEL/KNEE BLOCKER - INSTALLATION).

(7) If original master cylinder is being installed, check condition of seal at rear of master cylinder. Replace seal if cut, or torn.

(8) Clean cylinder mounting surface of brake booster. Use shop towel wetted with brake cleaner for this purpose. Dirt, grease, or similar materials will prevent proper cylinder seating and could result in vacuum leak.

(9) Align and install master cylinder on the booster studs. Install mounting nuts and tighten to 17.5 N·m (155 in. lbs.).

(10) Connect vacuum hose to booster check valve.

(11) Remount the cruise control servo to the original location. Tighten bracket mounting nuts to 17.5 N·m (155 in. lbs.).

(12) Connect and secure the brake lines to HCU and master cylinder. Start all brake line fittings by hand to avoid cross threading.

(13) Connect the wire to fluid reservoir.

(14) Install the air box.

(15) Fill and bleed base brake system, (Refer to 5 - BRAKES - STANDARD PROCEDURE).

(16) Verify proper brake operation before moving vehicle.

MASTER CYLINDER

DESCRIPTION

The master cylinder has a removable nylon reservoir. The cylinder body is made of aluminum and contains a primary and secondary piston assembly. The cylinder body including the piston assemblies are not serviceable. If diagnosis indicates an internal problem with the cylinder body, it must be replaced as an assembly. The reservoir and grommets are the only replaceable parts on the master cylinder.

OPERATION

The master cylinder bore contains a primary and secondary piston. The primary piston supplies hydraulic pressure to the front brakes. The secondary piston supplies hydraulic pressure to the rear brakes. The master cylinder reservoir stores reserve brake fluid for the hydraulic brake circuits.

DIAGNOSIS AND TESTING - MASTER CYLINDER/POWER BOOSTER

(1) Start engine and check booster vacuum hose connections. A hissing noise indicates vacuum leak. Correct any vacuum leak before proceeding, also ensure booster mounting nuts are torqued correctly.

(2) Stop engine and shift transmission into Neutral.

(3) Pump brake pedal until all vacuum reserve in booster is depleted.

(4) Press and hold brake pedal under light foot pressure. The pedal should hold firm, if the pedal falls away master cylinder is faulty (internal leakage).

(5) Start engine and note pedal action. It should fall away slightly under light foot pressure then hold firm. If no pedal action is discernible, power booster, vacuum supply, or vacuum check valve is faulty. Proceed to the POWER BOOSTER VACUUM TEST.

(6) If the POWER BOOSTER VACUUM TEST passes, rebuild booster vacuum reserve as follows: Release brake pedal. Increase engine speed to 1500 rpm, close the throttle and immediately turn off ignition to stop engine.

(7) Wait a minimum of 90 seconds and try brake action again. Booster should provide two or more vacuum assisted pedal applications. If vacuum assist is not provided, booster is faulty.

POWER BOOSTER VACUUM TEST

(1) Connect vacuum gauge to booster check valve with short length of hose and T-fitting (Fig. 55).

(2) Start and run engine at curb idle speed for one minute.

(3) Observe the vacuum supply. If vacuum supply is not adequate, repair vacuum supply.

(4) Clamp hose shut between vacuum source and check valve.

(5) Stop engine and observe vacuum gauge.

(6) If vacuum drops more than one inch Hg (33 millibars) within 15 seconds, booster diaphragm or check valve is faulty.

POWER BOOSTER CHECK VALVE TEST

(1) Disconnect vacuum hose from check valve.

(2) Remove check valve and valve seal from booster.

(3) Use a hand operated vacuum pump for test.

(4) Apply 15-20 inches vacuum at large end of check valve (Fig. 56).

(5) Vacuum should hold steady. If gauge on pump indicates vacuum loss, check valve is faulty and should be replaced.

STANDARD PROCEDURE - MASTER CYLINDER BLEEDING

A new master cylinder should be bled before installation on the vehicle. Required bleeding tools include bleed tubes and a wood dowel to stroke the pistons. Bleed tubes can be fabricated from brake line.

(1) Mount master cylinder in vise.

MASTER CYLINDER (Continued)

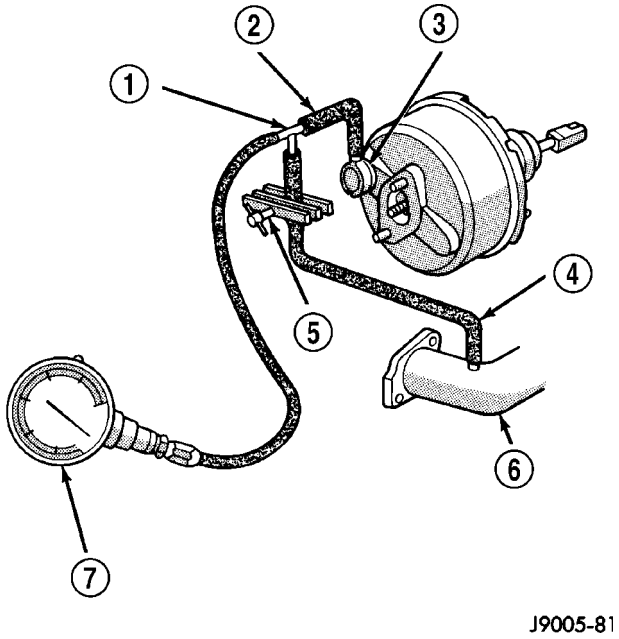

Fig. 55 Typical Booster Vacuum Test Connections

1 - TEE FITTING
2 - SHORT CONNECTING HOSE
3 - CHECK VALVE
4 - CHECK VALVE HOSE
5 - CLAMP TOOL
6 - INTAKE MANIFOLD
7 - VACUUM GAUGE

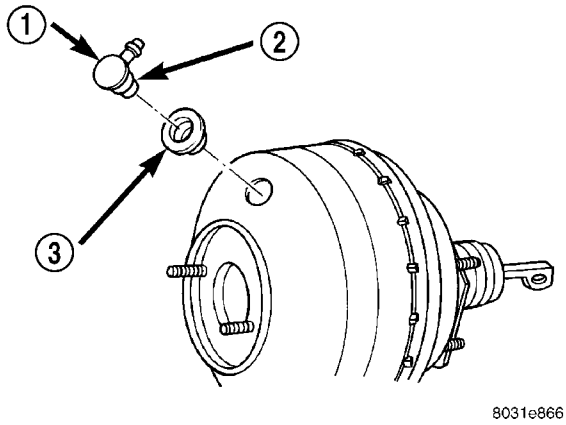

Fig. 56 TYPICAL - VACUUM CHECK VALVE AND SEAL

1 - BOOSTER CHECK VALVE
2 - APPLY TEST VACUUM HERE
3 - VALVE SEAL

(2) Attach bleed tubes to cylinder outlet ports. Then position each tube end into reservoir (Fig. 57).

(3) Fill reservoir with fresh brake fluid.

(4) Press cylinder pistons inward with wood dowel. Then release pistons and allow them to return under spring pressure. Continue bleeding operations until air bubbles are no longer visible in fluid.

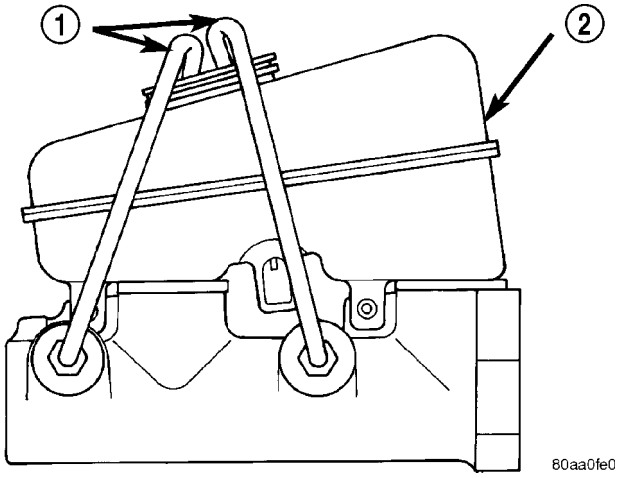

Fig. 57 MASTER - TYPICAL

1 - BLEEDING TUBES
2 - RESERVOIR

REMOVAL

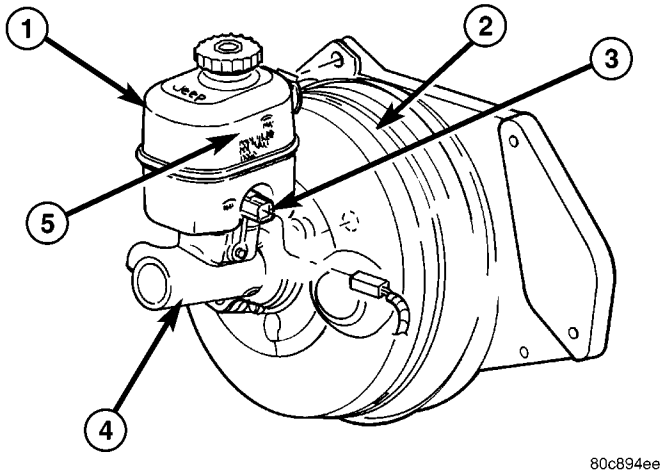

Fig. 58 MASTER CYLINDER

1 - FLUID RESERVOIR
2 - BOOSTER
3 - FLUID LEVEL SWITCH
4 - MASTER CYLINDER
5 - FLUID LEVEL MARKS

(1) Siphon and drain the fluid from the reservoir (1).

(2) Remove the brake lines at the master cylinder (4).

(3) Disconnect the fluid level electrical connector (3) from the reservoir (1).

(4) Remove mounting nuts from the master cylinder (4).

(5) Remove master cylinder (4).

(6) Remove cylinder cover and drain the rest of the fluid.

MASTER CYLINDER (Continued)

(7) If master cylinder reservoir requires service, (Refer to 5 - BRAKES/HYDRAULIC/MECHANICAL/ FLUID RESERVOIR - REMOVAL). (Fig. 58)

INSTALLATION

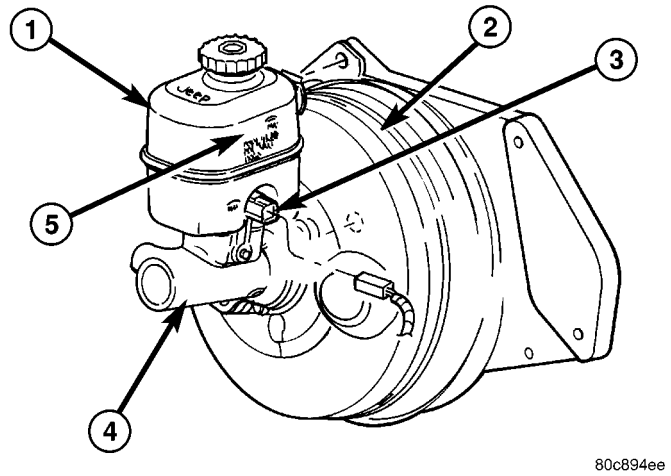

Fig. 59 MASTER CYLINDER

1 - FLUID RESERVOIR
2 - BOOSTER
3 - FLUID LEVEL SWITCH
4 - MASTER CYLINDER
5 - FLUID LEVEL MARKS

NOTE: If master cylinder is replaced, bleed cylinder before installation.

(1) Clean cylinder mounting surface of brake booster (2).

(2) Install master cylinder (4) onto brake booster studs.

(3) Install mounting nuts and tighten to 25 N·m (220 in. lbs.).

(4) Connect the brake lines to the master cylinder and tighten to 20 N·m (180 in. lbs.).

(5) Connect fluid level electrical connector (3) to the reservoir (1) (Fig. 59).

(6) Fill and bleed base brake system, (Refer to 5 - BRAKES - STANDARD PROCEDURE).

FLUID

DIAGNOSIS AND TESTING

BRAKE FLUID CONTAMINATION

Indications of fluid contamination are swollen or deteriorated rubber parts.

Swollen rubber parts indicate the presence of petroleum in the brake fluid.

To test for contamination, put a small amount of drained brake fluid in clear glass jar. If fluid separates into layers, there is mineral oil or other fluid contamination of the brake fluid.

If brake fluid is contaminated, drain and thoroughly flush system. Replace master cylinder, proportioning valve, caliper seals, wheel cylinder seals, Antilock Brakes hydraulic unit and all hydraulic fluid hoses.

STANDARD PROCEDURE - MASTER CYLINDER FLUID LEVEL

Always clean the master cylinder reservoir and cap before adding fluid. This will prevent dirt from falling in the reservoir and contaminating the brake fluid.

The reservoir has a ADD and a FULL mark on the side (Fig. 60) fill to the FULL mark.

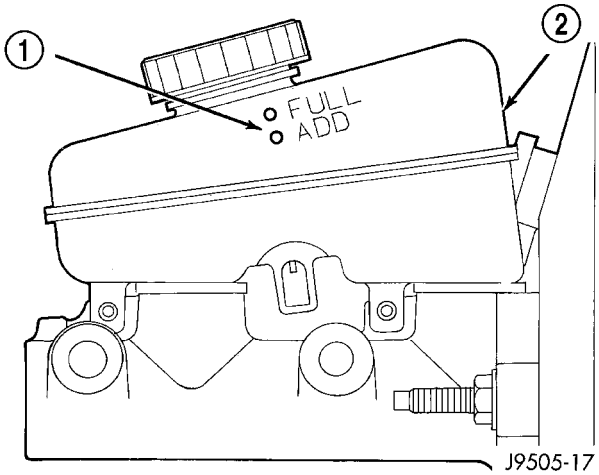

Fig. 60 TYPICAL - MASTER CYLINDER FLUID LEVEL

1 - FLUID LEVEL MARKS
2 - RESERVOIR

SPECIFICATIONS

BRAKE FLUID

The brake fluid used in this vehicle must conform to DOT 3 specifications and SAE J1703 standards. No other type of brake fluid is recommended or approved for usage in the vehicle brake system. Use only Mopar brake fluid or an equivalent from a tightly sealed container.

CAUTION: Never use reclaimed brake fluid or fluid from an container which has been left open. An open container of brake fluid will absorb moisture from the air and contaminate the fluid.

FLUID (Continued)

CAUTION: Never use any type of a petroleum-based fluid in the brake hydraulic system. Use of such type fluids will result in seal damage of the vehicle brake hydraulic system causing a failure of the vehicle brake system. Petroleum based fluids would be items such as engine oil, transmission fluid, power steering fluid, etc.

FLUID RESERVOIR

REMOVAL

(1) Install prop rod on brake pedal to keep pressure on the brake system.

(2) Remove reservoir cap and siphon fluid into drain container.

(3) Remove the electrical connector from the fluid level switch in the reservoir.

(4) Remove the reservoir mounting bolt.

(5) Remove the reservoir from the master cylinder by pulling upwards.

(6) Remove old grommets from cylinder body.

INSTALLATION

(1) Fill and bleed master cylinder on bench before installation in vehicle.

CAUTION: Do not use any type of tool to install the grommets. Tools may cut, or tear the grommets creating a leak problem after installation. Install the grommets using finger pressure only.

(2) Lubricate new grommets with clean brake fluid and Install new grommets in cylinder body. Use finger pressure to install and seat grommets.

(3) Start reservoir in grommets. Then rock reservoir back and forth while pressing downward to seat it in grommets.

(4) Install the mounting bolt for the reservoir to the master cylinder.

(5) Reconnect the electrical connector to the fluid reservoir level switch.

(6) Remove the prop rod from the vehicle.

(7) Fill and bleed base brake system, (Refer to 5 - BRAKES - STANDARD PROCEDURE).

SUPPORT PLATE

REMOVAL

(1) Remove wheel and tire assembly.

(2) Remove the disc brake caliper (Refer to 5 - BRAKES/HYDRAULIC/MECHANICAL/DISC BRAKE CALIPERS - REMOVAL).

(3) Remove the rotor, (Refer to 5 - BRAKES/HYDRAULIC/MECHANICAL/ROTORS - REMOVAL).

(4) Remove the axle shaft (Fig. 61), (Refer to 3 - DIFFERENTIAL & DRIVELINE/REAR AXLE - AXLE SHAFTS - REMOVAL).

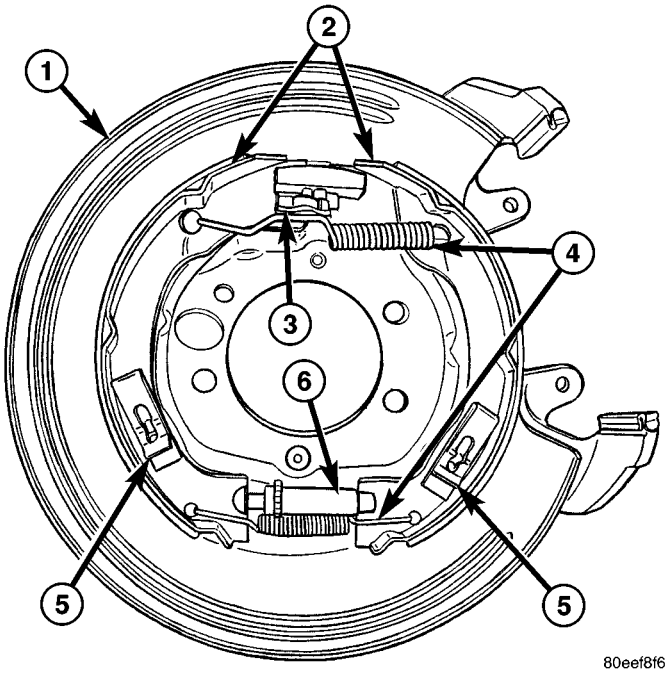

Fig. 61 BRAKE SHOES

1 - SUPPORT PLATE
2 - PARK BRAKE SHOES
3 - EQUALIZER
4 - SPRINGS
5 - HOLD DOWN CLIPS
6 - ADJUSTER

(5) Remove the park brake shoes (2) (Fig. 61), (Refer to 5 - BRAKES/PARKING BRAKE/SHOES - REMOVAL).

(6) Remove the parking brake cable from the brake lever.

(7) Remove the bolts attaching the support plate (1) to the axle and remove the support plate (1).

SUPPORT PLATE (Continued)

INSTALLATION

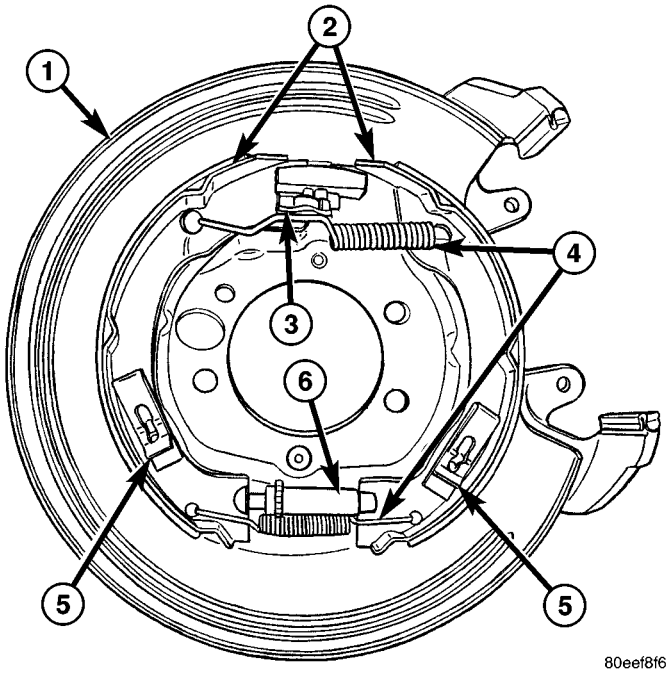

Fig. 62 BRAKE SHOES

1 - SUPPORT PLATE
2 - PARK BRAKE SHOES
3 - EQUALIZER
4 - SPRINGS
5 - HOLD DOWN CLIPS
6 - ADJUSTER

(1) Install support plate on axle flange. Tighten attaching bolts to 115 N·m (85 ft. lbs.).

(2) Install the park brake shoes (2) (Fig. 62), (Refer to 5 - BRAKES/PARKING BRAKE/SHOES - INSTALLATION).

(3) Install parking brake cable in the brake lever.

(4) Install axle shaft (3), (Fig. 63), (Refer to 3 - DIFFERENTIAL & DRIVELINE/REAR AXLE - AXLE SHAFTS - INSTALLATION).

(5) Adjust brake shoes to drum with brake gauge (Refer to 5 - BRAKES/PARKING BRAKE/SHOES - ADJUSTMENTS).

(6) Install the rotor (Refer to 5 - BRAKES/HYDRAULIC/MECHANICAL/ROTORS - INSTALLATION).

(7) Install the caliper (Refer to 5 - BRAKES/HYDRAULIC/MECHANICAL/DISC BRAKE CALIPERS - INSTALLATION).

(8) Install the wheel and tire assembly (Refer to 22 - TIRES/WHEELS/WHEELS - STANDARD PROCEDURE).

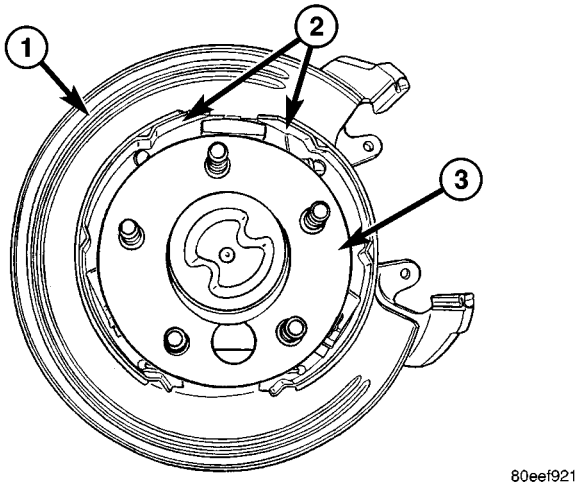

Fig. 63 PARK BRAKE SHOES INSTALLED

1 - SUPPORT PLATE
2 - PARK BRAKE SHOES
3 - AXLE

PARKING BRAKE

DESCRIPTION

The parking brake is a hand lever and cable operated system used to apply the rear brakes.

OPERATION

A hand operated lever in the passenger compartment is the main application device. The front cable is connected between the hand lever and the rear cables with an equalizer.

The rear cables are connected to the actuating lever on each primary brake shoe. The levers are attached to the brake shoes by a pin either pressed into, or welded to the lever. A clip is used to secure the pin in the brake shoe. The pin allows each lever to pivot independently of the brake shoe.

To apply the parking brakes, the hand lever is pulled upward. This pulls the rear brake shoe actuating levers forward, by means tensioner and cables. As the actuating lever is pulled forward, the parking brake strut (which is connected to both shoes), exerts a linear force against the secondary brake shoe. This action presses the secondary shoe into contact with the drum. Once the secondary shoe contacts the drum, force is exerted through the strut. This force is transferred through the strut to the primary brake shoe causing it to pivot into the drum as well.

A gear type ratcheting mechanism is used to hold the lever in an applied position. Parking brake release is accomplished by the hand lever release button.

PARKING BRAKE (Continued)

A parking brake switch is mounted on the parking brake lever and is actuated by movement of the lever. The switch, which is in circuit with the red warning light in the dash, will illuminate the warning light whenever the parking brakes are applied.

Parking brake is self-adjusting when the lever is pulled. The cable tensioner, once adjusted at the factory, should not need further adjustment under normal circumstances.

ADJUSTMENTS

ADJUSTMENT - LOCK OUT

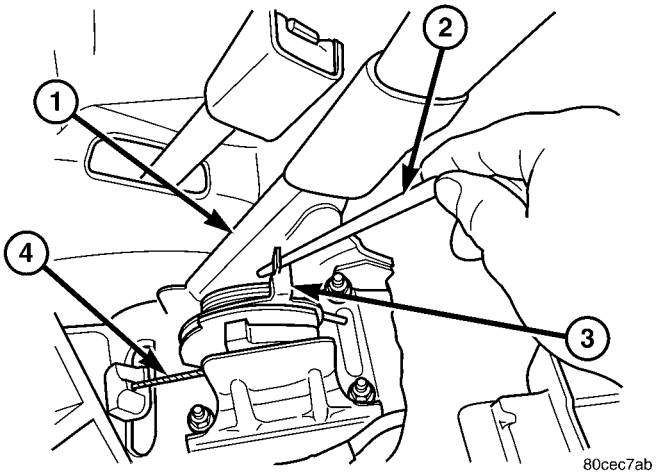

Fig. 64 LOCK OUT CABLES

1 - PARKING BRAKE HANDLE
2 - PUNCH
3 - CABLE GUIDE
4 - CABLE

NOTE: The parking brake is self-adjusting, It can not be adjusted.

(1) Remove the center floor console (Refer to 23 - BODY/INTERIOR/FLOOR CONSOLE - REMOVAL).

(2) Pull up on the spring until the tab on the lever passes the tab on the cable guide (3) and install a punch (2) in the hole on the side then release (Fig. 64).

(3) The park brake system is now locked out to perform necessary repairs.

CABLES

REMOVAL

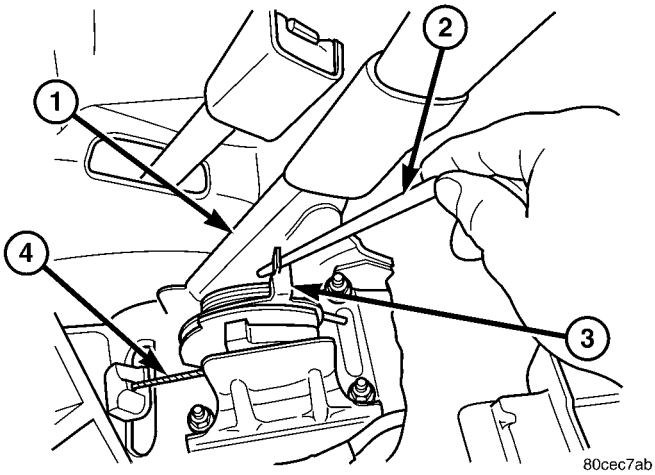

Fig. 65 LOCK OUT CABLES

1 - PARKING BRAKE HANDLE
2 - PUNCH
3 - CABLE GUIDE
4 - CABLE

(1) Lock out the parking brake cables (Refer to 5 - BRAKES/PARKING BRAKE - ADJUSTMENTS) (Fig. 65).

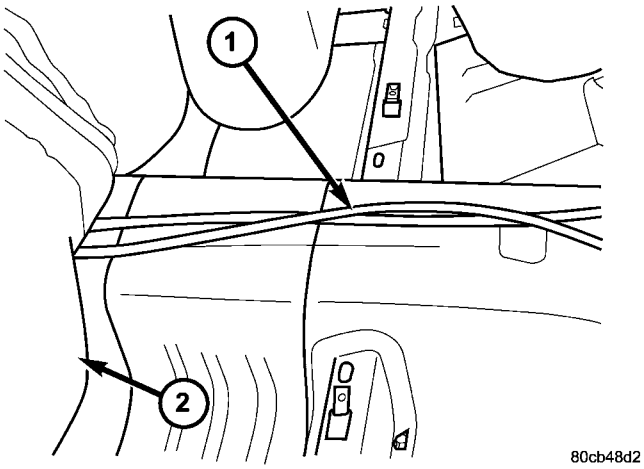

Fig. 66 MOUNTING BRACKETS

1 - PARK BRAKE CABLES
2 - CARPET

CABLES (Continued)

(2) Remove the rear seat (Refer to 23 - BODY/SEATS/SEAT - REMOVAL).

(3) Pull the carpet forward far enough in the rear to gain access to the two parking brake cables thru the floor (Fig. 66).

(4) Disconnect the two cables (1) from the front mount (Fig. 67).

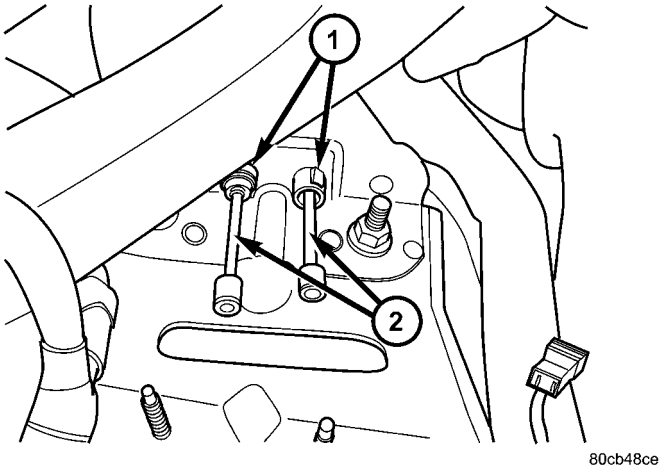

Fig. 67 CABLE FRONT MOUNT

1 - RETAINER CLIPS
2 - CABLES

(5) Push the cables (2) thru the floor with the grommets.

(6) Remove the cable from the axle bracket with a proper sized box end wrench over the tangs (1).

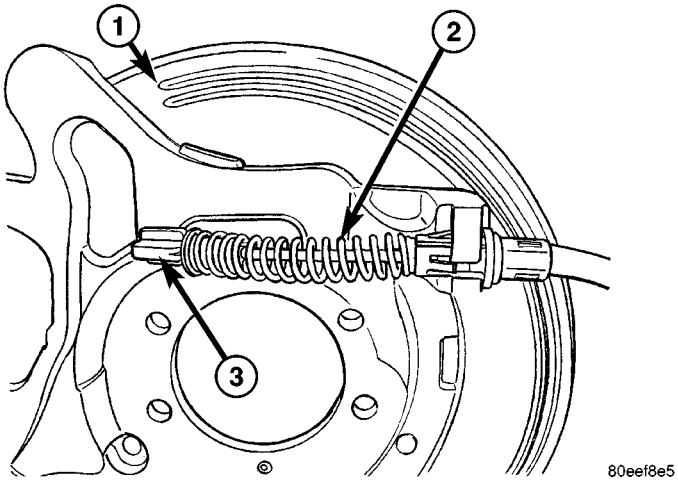

Fig. 68 CABLE REMOVAL/INSTALLATION

1 - SUPPORT PLATE
2 - PARK BRAKE CABLE
3 - ACTUATOR LEVER

(7) Remove the brake cable(2) from the brake lever (3). (Fig. 68)

INSTALLATION

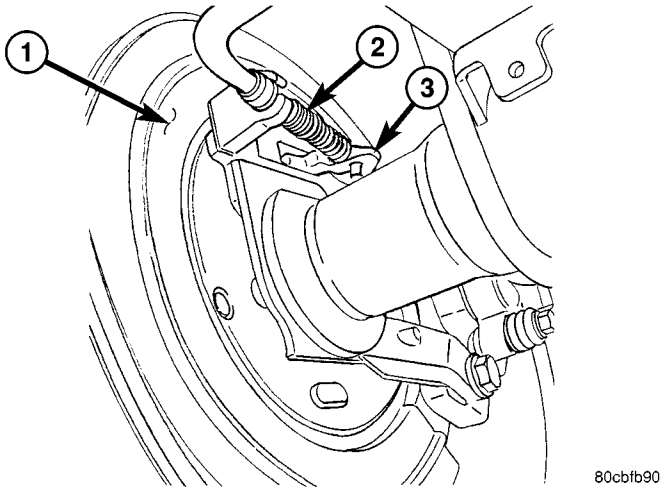

Fig. 69 PARKING BRAKE CABLE

1 - SUPPORT PLATE
2 - CABLE
3 - ACTUATOR LEVER

(1) Install the cables(2) into the axle bracket (Fig. 69).

(2) Reconnect the cable to the park brake lever (3) (Fig. 69).

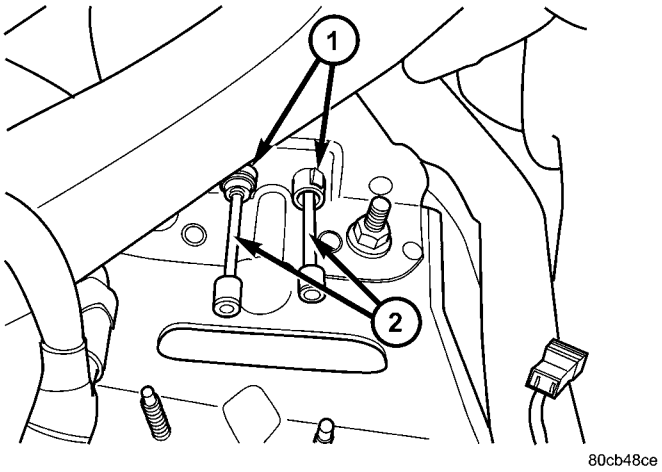

Fig. 70 CABLE FRONT MOUNT

1 - RETAINER CLIPS
2 - CABLES

(3) Push the cables (2) thru the floor and seat the grommets (1) (Fig. 70).

(4) Reconnect the two cables (1) to the front mount.

CABLES (Continued)

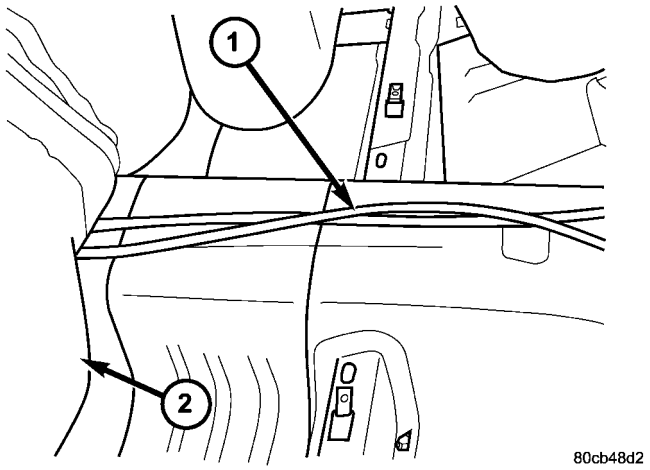

Fig. 71 MOUNTING BRACKETS

1 - PARK BRAKE CABLES
2 - CARPET

(5) Lay the carpet (2) back down in the rear (Fig. 71).

(6) Install the rear seat (Refer to 23 - BODY/SEATS/SEAT - INSTALLATION).

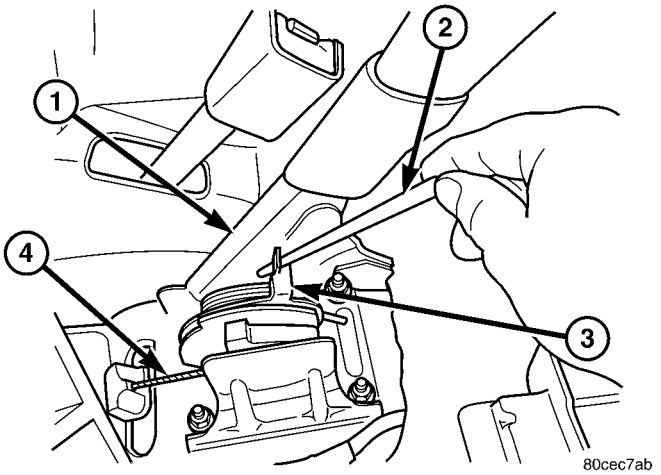

Fig. 72 LOCK OUT CABLES

1 - PARKING BRAKE HANDLE
2 - PUNCH
3 - CABLE GUIDE
4 - CABLE

(7) Remove the lock out device (2) on the lever (1) (Fig. 72).

(8) Adjust the park brake shoes (Refer to 5 - BRAKES/PARKING BRAKE/SHOES - ADJUSTMENTS).

(9) Test the parking brake.

LEVER

REMOVAL

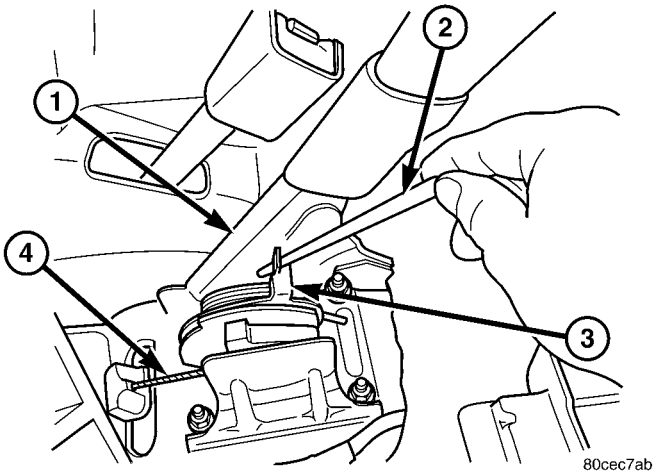

Fig. 73 LOCK OUT CABLES

1 - PARKING BRAKE HANDLE
2 - PUNCH
3 - CABLE GUIDE
4 - CABLE

(1) Remove the center floor console, (Refer to 23 - BODY/INTERIOR/FLOOR CONSOLE - REMOVAL).

(2) Lock out the parking brakes (Fig. 73) (Refer to 5 - BRAKES/PARKING BRAKE - ADJUSTMENTS).

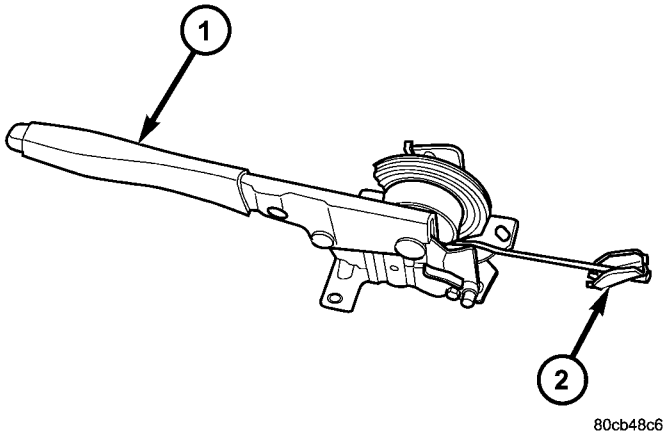

Fig. 74 PARKING BRAKE LEVER

1 - PARK BRAKE LEVER ASSEMBLY
2 - EQUALIZER

(3) Disengage the front cables from the equalizer (2) (Fig. 74).

(4) Disconnect the parking brake lamp switch wire (Fig. 74).

LEVER (Continued)

(5) Remove the parking brake lever assembly (1) mounting bolts (Fig. 75).

(6) Remove the lever assembly (1).

INSTALLATION

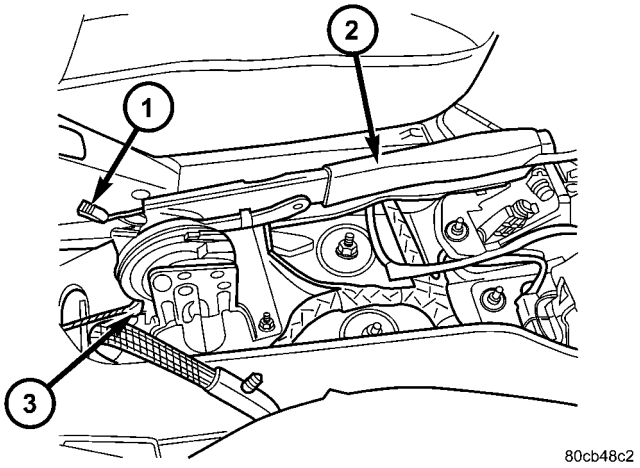

Fig. 75 LEVER MOUNT

1 - ELECTRICAL CONNECTOR
2 - PARK BRAKE LEVER ASSEMBLY
3 - CABLE

(1) Install the parking brake lever assembly (2).

(2) Install the parking brake lever assembly (2) to the mounting bolts. Tighten (Fig. 75).

(3) Engage the front cables (3) to the equalizer (Fig. 74).

(4) Reconnect the parking brake lamp switch wire (Fig. 74).

(5) If installing a new parking brake lever remove the pin that comes on the lever when shipped.

(6) If you are reinstalling the original park brake lever remove the lock out device at this time.

(7) Test the parking brake lever. (Fig. 75).

(8) Install the center floor console, (Refer to 23 - BODY/INTERIOR/FLOOR CONSOLE - INSTALLATION).

SHOES

DESCRIPTION

Drum in hat park brakes are dual shoe, internal expanding units with an automatic self adjusting mechanism (Fig. 76).

OPERATION

When the parking brake pedal is depressed the brake cable pulls the brake shoes outward against the brake drum. When the brake pedal is released the return springs attached to the brake shoes pull the shoes back to there original position.

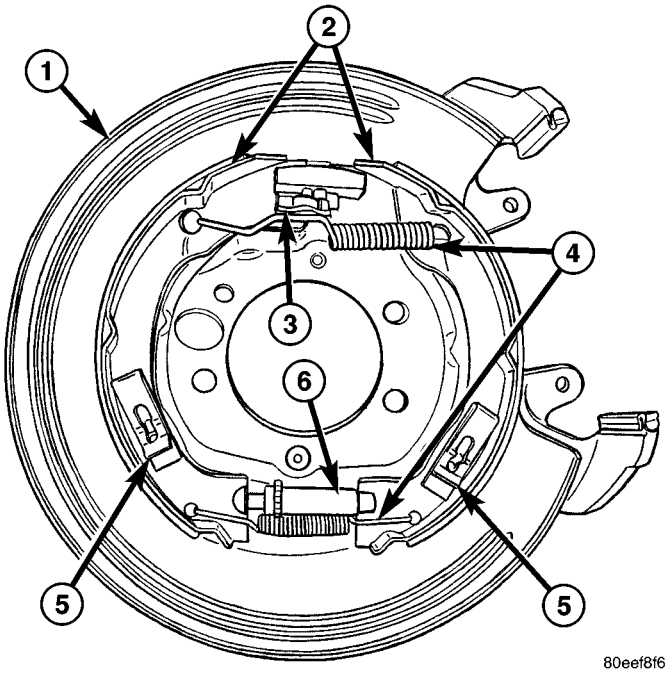

Fig. 76 BRAKE SHOES

1 - SUPPORT PLATE
2 - PARK BRAKE SHOES
3 - EQUALIZER
4 - SPRINGS
5 - HOLD DOWN CLIPS
6 - ADJUSTER

REMOVAL

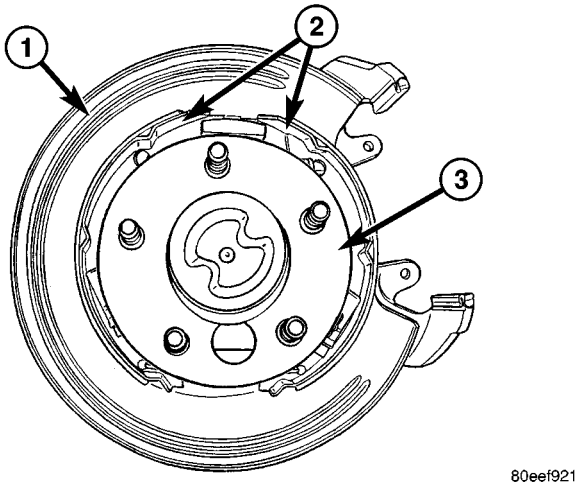

Fig. 77 PARK BRAKE SHOES INSTALLED

1 - SUPPORT PLATE
2 - PARK BRAKE SHOES
3 - AXLE

(1) Raise and support the vehicle.

(2) Remove the tire and wheel assembly.

(3) Remove the disc brake caliper, (Fig. 77), (Refer to 5 - BRAKES/HYDRAULIC/MECHANICAL/DISC BRAKE CALIPERS - REMOVAL).

SHOES (Continued)

(4) Remove the disc brake rotor, (Fig. 77), (Refer to 5 - BRAKES/HYDRAULIC/MECHANICAL/ROTORS - REMOVAL).

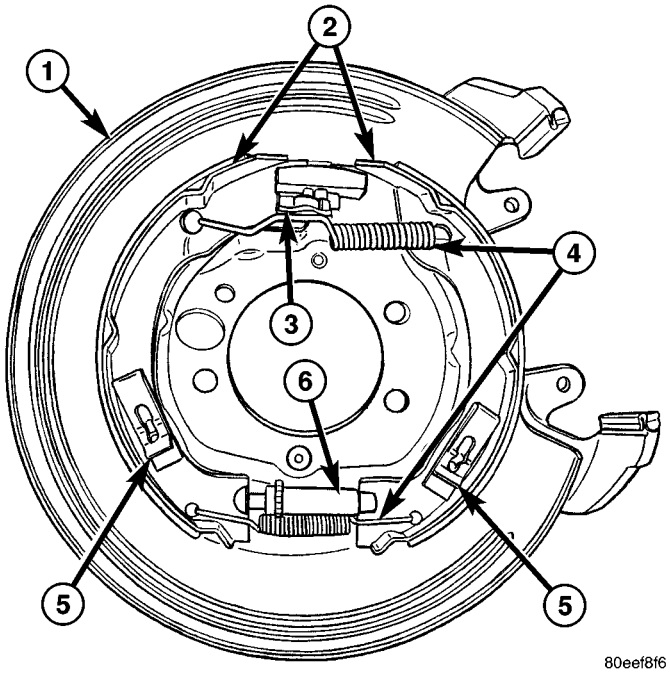

Fig. 78 BRAKE SHOES

1 - SUPPORT PLATE
2 - PARK BRAKE SHOES
3 - EQUALIZER
4 - SPRINGS
5 - HOLD DOWN CLIPS
6 - ADJUSTER

(5) Disassemble the rear park brake shoes (2) (Fig. 78).

CLEANING - REAR DRUM IN HAT BRAKE

Clean the individual brake components, including the support plate exterior, with a water dampened cloth or with brake cleaner. Do not use any other cleaning agents. Remove light rust and scale from the brake shoe contact pads on the support plate with fine sandpaper.

INSPECTION - REAR DRUM IN HAT BRAKE

As a general rule, riveted brake shoes should be replaced when worn to within 0.78 mm (1/32 in.) of the rivet heads. Bonded lining should be replaced when worn to a thickness of 1.6 mm (1/16 in.).

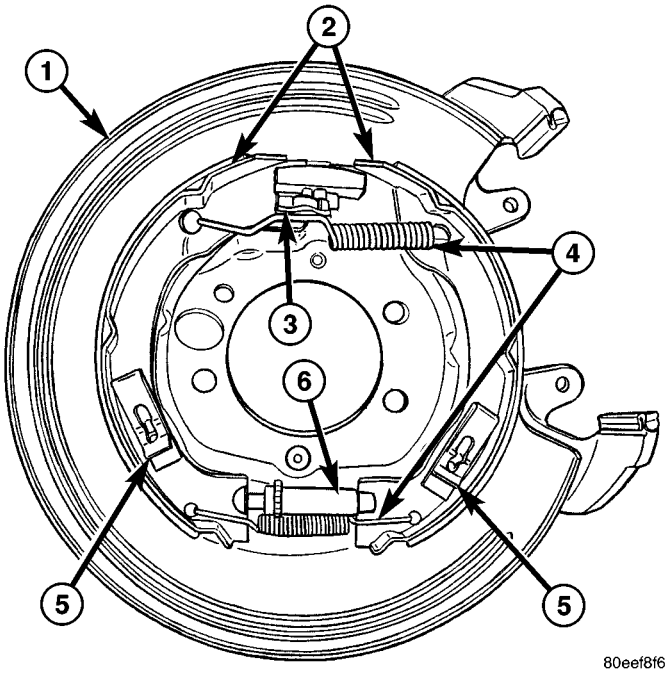

Fig. 79 BRAKE SHOES

1 - SUPPORT PLATE
2 - PARK BRAKE SHOES
3 - EQUALIZER
4 - SPRINGS
5 - HOLD DOWN CLIPS
6 - ADJUSTER

Examine the lining contact pattern to determine if the shoes are bent or the drum is tapered. The lining should exhibit contact across its entire width. Shoes exhibiting contact only on one side should be replaced and the drum checked for runout or taper (Fig. 79).

Inspect the adjuster screw assembly (6). Replace the assembly if the star wheel or threads are damaged, or the components are severely rusted or corroded (Fig. 79).

Discard the brake springs (4) and retainer components if worn, distorted or collapsed. Also replace the springs if a brake drag condition had occurred. Overheating will distort and weaken the springs.

Inspect the brake shoe contact pads on the support plate (1), replace the support plate (1) if any of the pads are worn or rusted through. Also replace the plate if it is bent or distorted (Fig. 79).

SHOES (Continued)

INSTALLATION

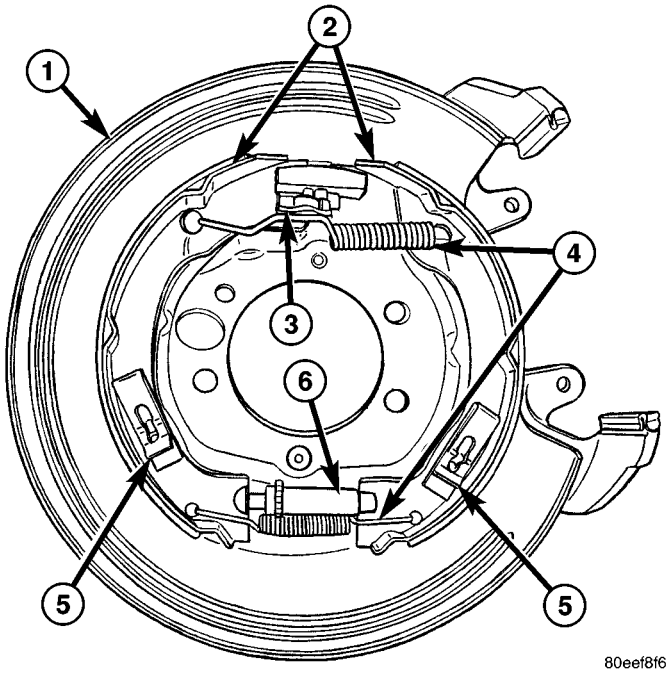

Fig. 80 BRAKE SHOES

1 - SUPPORT PLATE
2 - PARK BRAKE SHOES
3 - EQUALIZER
4 - SPRINGS
5 - HOLD DOWN CLIPS
6 - ADJUSTER

NOTE: On a new vehicle or after parking brake lining replacement, it is recommended that the parking brake system be conditioned prior to use. This is done by making one stop from 25 mph on dry pavement or concrete using light to moderate force on the parking brake lever.

(1) Reassemble the rear park brake shoes (2) (Fig. 80).

(2) Adjust the rear brake shoes (5) (Refer to 5 - BRAKES/PARKING BRAKE/SHOES - ADJUSTMENTS) (Fig. 81).

(3) Install the disc brake rotor (Refer to 5 - BRAKES/HYDRAULIC/MECHANICAL/ROTORS - INSTALLATION).

(4) Install the disc brake caliper (Refer to 5 - BRAKES/HYDRAULIC/MECHANICAL/DISC BRAKE CALIPERS - INSTALLATION).

(5) Install the tire and wheel assembly (Refer to 22 - TIRES/WHEELS/WHEELS - STANDARD PROCEDURE).

(6) Lower the vehicle.

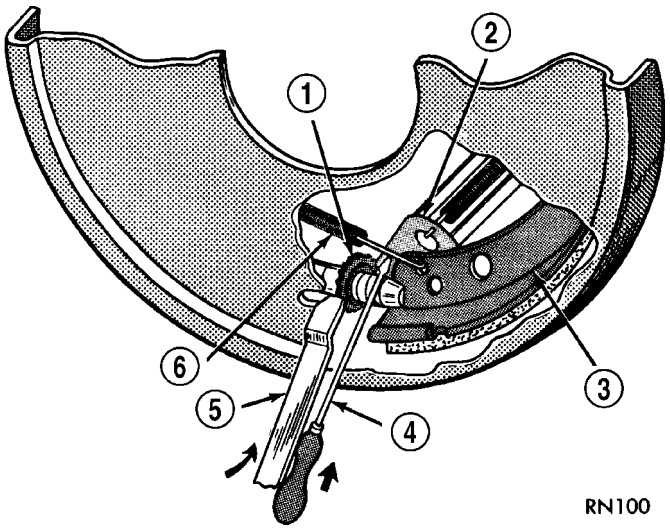

Fig. 81 Brake Adjustment

1 - STAR WHEEL
2 - LEVER
3 - BRAKE SHOE WEB
4 - SCREWDRIVER
5 - ADJUSTING TOOL
6 - ADJUSTER SPRING

ADJUSTMENTS

ADJUSTMENT - WITH ADJUSTING TOOL

Adjustment can be made with a standard brake gauge or with adjusting tool. Adjustment is performed with the complete brake assembly installed on the backing plate.

(1) Be sure parking brake lever is fully released.

(2) Raise vehicle so rear wheels can be rotated freely.

(3) Remove plug from each access hole in brake support plates.

(4) Loosen parking brake cable adjustment nut until there is slack in front cable.

(5) Insert adjusting tool through support plate access hole and engage tool in teeth of adjusting screw star wheel (Fig. 82).

(6) Rotate adjuster screw star wheel (move tool handle upward) until slight drag can be felt when wheel is rotated.

(7) Push and hold adjuster lever away from star wheel with thin screwdriver.

(8) Back off adjuster screw star wheel until brake drag is eliminated.

(9) Repeat adjustment at opposite wheel. Be sure adjustment is equal at both wheels.

(10) Install support plate access hole plugs.

(11) Adjust parking brake cable and lower vehicle.

(12) Apply park brake hand lever and make sure park brakes hold the vehicle staionary.

(13) Release park brake hand lever.

SHOES (Continued)

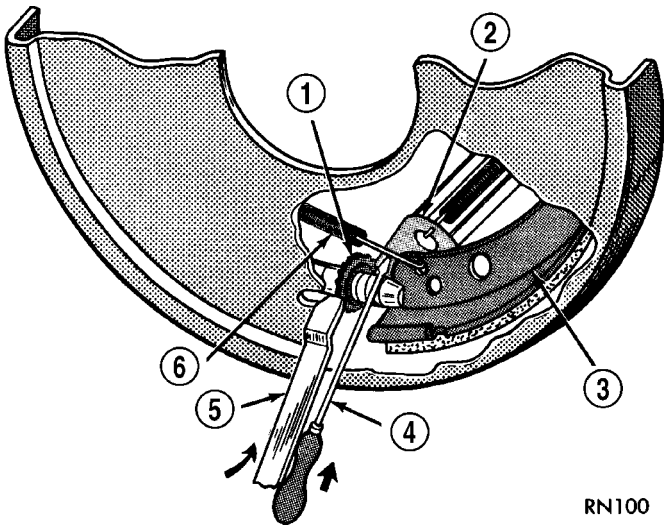

Fig. 82 Brake Adjustment

1 - STAR WHEEL
2 - LEVER
3 - BRAKE SHOE WEB
4 - SCREWDRIVER
5 - ADJUSTING TOOL
6 - ADJUSTER SPRING

ADJUSTMENT - REAR DRUM IN HAT PARK BRAKE (ROTOR REMOVED)

Under normal circumstances, the only time adjustment is required is when the shoes are replaced, removed for access to other parts, or when one or both rotors are replaced.

Adjustment can be made with a standard brake gauge or with adjusting tool. Adjustment is performed with the complete brake assembly installed on the backing plate.

CAUTION: Before adjusting the park brake shoes be sure that the park brake pedal is in the fully released position. If park brake pedal is not in the fully released position, the park brake shoes can not be accurately adjusted.

(1) Raise vehicle.
(2) Remove tire and wheel.
(3) Remove disc brake caliper from caliper adapter (Refer to 5 - BRAKES/HYDRAULIC/MECHANICAL/DISC BRAKE CALIPERS - REMOVAL).
(4) Remove rotor from the axleshaft (Refer to 5 - BRAKES/HYDRAULIC/MECHANICAL/ROTORS - REMOVAL).

NOTE: When measuring the brake drum diameter, the diameter should be measured in the center of the area in which the park brake shoes contact the surface of the brake drum.

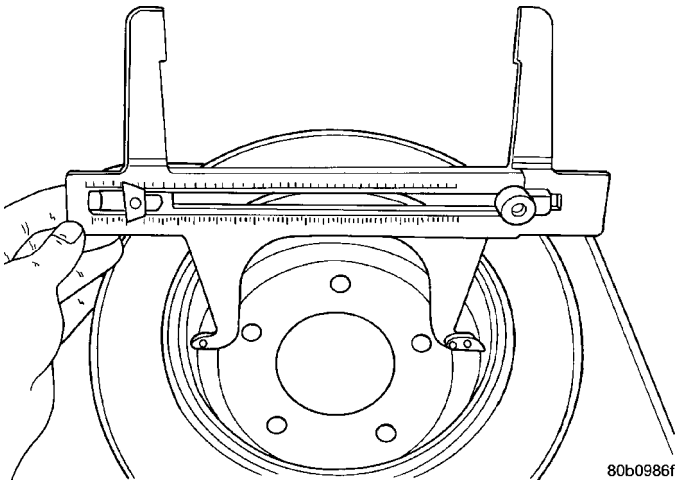

Fig. 83 MEASURING PARK BRAKE DRUM DIAMETER

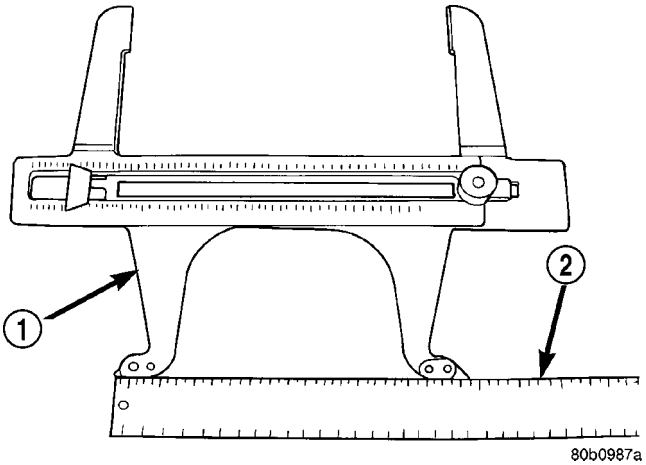

Fig. 84 READING PARK BRAKE DRUM DIAMETER

1 - SPECIAL TOOL C-3919
2 - RULER

(5) Using Brake Shoe Gauge, Special Tool C-3919 (1), or equivalent, **accurately** measure the inside diameter of the park brake drum portion of the rotor (Fig. 83).

(6) Using a ruler (2) that reads in 64th of an inch, accurately read the measurement of the inside diameter of the park brake drum from the special tool (Fig. 84).

SHOES (Continued)

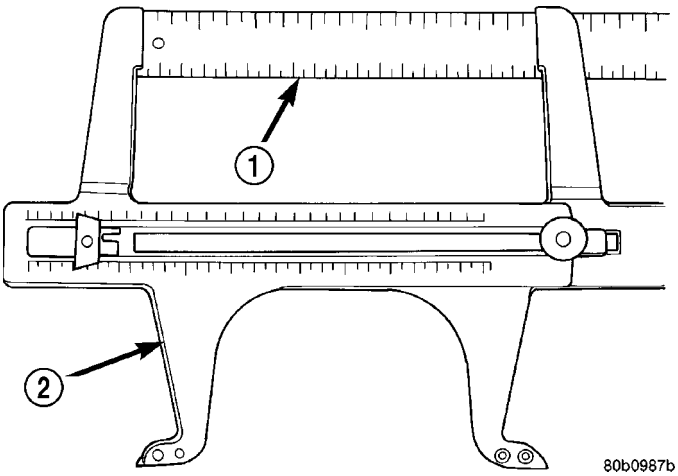

Fig. 85 SETTING GAUGE TO PARK BRAKE SHOE MEASUREMENT

1 - RULER
2 - SPECIAL TOOL C-3919

(7) Reduce the inside diameter measurement of the brake drum that was taken using Special Tool C-3919 (2) by 1/64 of an inch. Reset Gauge, Brake Shoe, Special Tool C-3919 (2) or the equivalent used, so that the outside measurement jaws are set to the reduced measurement (Fig. 85).

(8) Place Gauge, Brake Shoe, Special Tool C-3919 (2) , or equivalent over the park brake shoes. The special tool must be located diagonally across at the top of one shoe and bottom of opposite shoe (widest point) of the park brake shoes.

(9) Using the star wheel adjuster, adjust the park brake shoes until the lining on the park brake shoes just touches the jaws on the special tool.

(10) Repeat step 8 above and measure shoes in both directions.

(11) Install brake rotor on the axleshaft (Refer to 5 - BRAKES/HYDRAULIC/MECHANICAL/ROTORS - INSTALLATION).

(12) Rotate rotor to verify that the park brake shoes are not dragging on the brake drum. If park brake shoes are dragging, remove rotor and back off star wheel adjuster one notch and recheck for brake shoe drag against drum. Continue with the previous step until brake shoes are not dragging on brake drum.

(13) Install disc brake caliper on caliper adapter (Refer to 5 - BRAKES/HYDRAULIC/MECHANICAL/ DISC BRAKE CALIPERS - INSTALLATION).

(14) Install wheel and tire.

(15) Tighten the wheel mounting nuts in the proper sequence until all nuts are torqued to half the specified torque. Then repeat the tightening sequence to the full specified torque of 129 N·m (95 ft. lbs.).

(16) Lower vehicle.

CAUTION: Before moving vehicle, pump brake pedal several times to ensure the vehicle has a firm enough pedal to stop the vehicle.

NOTE: After parking brake lining replacement, it is recommended that the parking brake system be conditioned prior to use. This is done by making one stop from 25 mph on dry pavement or concrete using light to moderate force on the parking brake hand lever.

(17) Road test the vehicle to ensure proper function of the vehicle's brake system.

BRAKES - ABS

TABLE OF CONTENTS

page

BRAKES - ABS
DESCRIPTION 41
OPERATION 41
DIAGNOSIS AND TESTING - ANTILOCK BRAKING SYSTEM 42
STANDARD PROCEDURE - ABS BRAKE BLEEDING 42
SPECIFICATIONS 42
ELECTRICAL
DESCRIPTION 43
OPERATION 43
FRONT WHEEL SPEED SENSOR
REMOVAL 43
INSTALLATION 43
REAR WHEEL SPEED SENSOR
REMOVAL 44
INSTALLATION 44
HCU (HYDRAULIC CONTROL UNIT)
DESCRIPTION 44
OPERATION 44
REMOVAL 45
DISASSEMBLY 45
ASSEMBLY 46
INSTALLATION 47

BRAKES - ABS

DESCRIPTION

ANTILOCK BRAKING SYSTEM

The purpose of the antilock system is to prevent wheel lockup during periods of high wheel slip. Preventing lockup helps maintain vehicle braking action and steering control.

The antilock ABM activates the system whenever sensor signals indicate periods of high wheel slip. High wheel slip can be described as the point where wheel rotation begins approaching 20 to 30 percent of actual vehicle speed during braking. Periods of high wheel slip occur when brake stops involve high pedal pressure and rate of vehicle deceleration.

Battery voltage is supplied to the ABM ignition terminal when the ignition switch is turned to Run position. The ABM performs a system initialization procedure at this point. Initialization consists of a static and dynamic self check of system electrical components.

The static check occurs after the ignition switch is turned to Run position. The dynamic check occurs when vehicle road speed reaches approximately 30 kph (18 mph). During the dynamic check, the ABM briefly cycles the pump and solenoids to verify operation.

If an ABS component exhibits a fault during initialization, the ABM illuminates the amber warning light and registers a fault code in the microprocessor memory.

ELECTRONIC BRAKE DISTRIBUTION

The electronic brake distribution (EBD) functions like a rear proportioning valve. The EBD system uses the ABS system to control the slip of the rear wheels in partial braking range. The braking force of the rear wheels is controlled electronically by using the inlet and outlet valves located in the HCU.

OPERATION

ANTILOCK BRAKING SYSTEM

During normal braking, the master cylinder, power booster and wheel brake units all function as they would in a vehicle without ABS. The HCU components are not activated.

During antilock braking fluid pressure is modulated according to wheel speed, degree of slip and rate of deceleration. A sensor at each wheel converts wheel speed into electrical signals. These signals are transmitted to the CAB for processing and determination of wheel slip and deceleration rate.

The ABS system has three fluid pressure control channels. The front brakes are controlled separately and the rear brakes in tandem. A speed sensor input signal indicating a high slip condition activates the CAB antilock program. Two solenoid valves are used in each antilock control channel. The valves are all located within the HCU valve body and work in pairs to either increase, hold, or decrease apply pressure as needed in the individual control channels. The solenoid valves are not static during antilock braking. They are cycled continuously to modulate pressure. Solenoid cycle time in antilock mode can be measured in milliseconds.

BRAKES - ABS (Continued)

ELECTRONIC BRAKE DISTRIBUTION

Upon entry into EBD the inlet valve for the rear brake circuit is switched on so that the fluid supply from the master cylinder is shut off. In order to decrease the rear brake pressure the outlet valve for the rear brake circuit is pulsed. This allows fluid to enter the low pressure accumulator (LPA) in the HCU resulting in a drop in fluid pressure to the rear brakes. In order to increase the rear brake pressure the outlet valve is switched off and the inlet valve is pulsed. This increases the pressure to the rear brakes. This will continue until the required slip difference is obtained. At the end of EBD braking (no brake application) the fluid in the LPA drains back to the master cylinder by switching on the outlet valve and draining through the inlet valve check valve. At the same time the inlet valve is switched on to prevent a hydraulic short circiut in case of another brake application.

The EBD will remain functional during many ABS fault modes. If the red and amber warning lamps are illuminated the EBD may have a fault.

DIAGNOSIS AND TESTING - ANTILOCK BRAKING SYSTEM

The ABS brake system performs several self-tests every time the ignition switch is turned on and the vehicle is driven. The ABM monitors the systems input and output circuits to verify the system is operating correctly. If the on board diagnostic system senses that a circuit is malfunctioning the system will set a trouble code in its memory.

NOTE: An audible noise may be heard during the self-test. This noise should be considered normal.

NOTE: The DRB III scan tool is used to diagnose the ABS system. For additional information refer to the Electrical, Electronic Control Modules section.

STANDARD PROCEDURE - ABS BRAKE BLEEDING

ABS system bleeding requires conventional bleeding methods plus use of the DRB scan tool. The procedure involves performing a base brake bleeding, followed by use of the scan tool to cycle and bleed the HCU pump and solenoids. A second base brake bleeding procedure is then required to remove any air remaining in the system.

(1) Perform base brake bleeding, (Refer to 5 - BRAKES - STANDARD PROCEDURE) OR (Refer to 5 - BRAKES - STANDARD PROCEDURE).

(2) Connect scan tool to the Data Link Connector.

(3) Select ANTILOCK BRAKES, followed by MISCELLANEOUS, then ABS BRAKES. Follow the instructions displayed. When scan tool displays TEST COMPLETE, disconnect scan tool and proceed.

(4) Perform base brake bleeding a second time, (Refer to 5 - BRAKES - STANDARD PROCEDURE) OR (Refer to 5 - BRAKES - STANDARD PROCEDURE).

(5) Top off master cylinder fluid level and verify proper brake operation before moving vehicle.

SPECIFICATIONS

TORQUE SPECIFICATIONS

DESCRIPTION	N·m	Ft. Lbs.	In. Lbs.
Hydraulic Control Unit Mounting Nuts (HCU)	14.1	—	125
Hydraulic Control Unit Brake Lines (HCU)	20.3	—	180
Antilock Brake Module Mounting Screws (ABM)	1.8	—	16
Wheel Speed Sensors Front Mounting Bolt	13.5	—	120
Wheel Speed Sensor Rear Mounting Bolt	9	—	80

ELECTRICAL

DESCRIPTION

Three wheel speed sensors are used. The front sensors are mounted to the steering knuckles. The rear sensor is mounted at the top of the rear axle differential carrier. Tone wheels are mounted to the outboard ends of the front axle shafts. The gear type tone wheel serves as the trigger mechanism for each sensor.

OPERATION

The sensors convert wheel speed into a small digital signal. The CAB sends 12 volts to the sensors. The sensor has an internal magneto resistance bridge that alters the voltage and amperage of the signal circuit. This voltage and amperage is changed by magnetic induction when the toothed tone wheel passes the wheel speed sensor. This digital signal is sent to the CAB. The CAB measures the voltage and amperage of the digital signal for each wheel.

FRONT WHEEL SPEED SENSOR

REMOVAL

(1) Disconnect the front wheel speed sensor wire connector that is located on the inboard side of the respective wheel house.

(2) Raise and support the vehicle.

(3) Remove the tire and wheel assembly.

(4) Remove the caliper adapter. (Refer to 5 - BRAKES/HYDRAULIC/MECHANICAL/DISC BRAKE CALIPER ADAPTER - REMOVAL).

CAUTION: Never allow the disc brake caliper to hang from the brake hose. Damage to the brake hose with result. Provide a suitable support to hang the caliper securely.

(5) Remove the disc brake rotor (3). (Refer to 5 - BRAKES/HYDRAULIC/MECHANICAL/ROTORS - REMOVAL).

(6) Remove the wheel speed sensor mounting bolt to the hub (Fig. 1).

(7) Remove the wheel speed sensor wire from the hub/bearing (Fig. 1).

(8) Remove the wheel speed sensor wire hold down (4) from the knuckle (Fig. 1).

(9) Remove the wheel speed sensor wire (1) thru the wheel well.

(10) Remove the wheel speed sensor (2) from the vehicle.

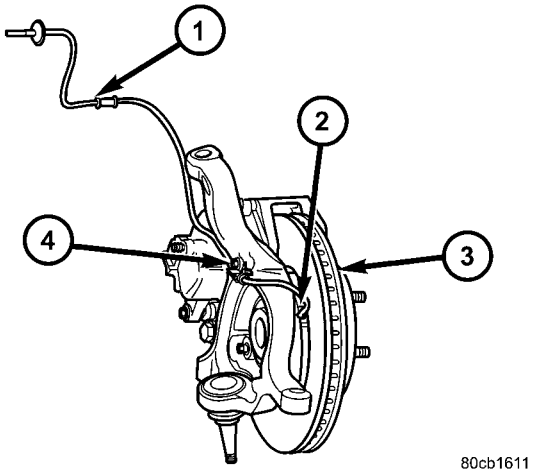

Fig. 1 FRONT WHEEL SPEED SENSOR

1 - WHEEL SPEED SENSOR WIRE
2 - WHEEL SPEED SENSOR
3 - ROTOR
4 - WHEEL SPEED SENSOR WIRE HOLD DOWN

INSTALLATION

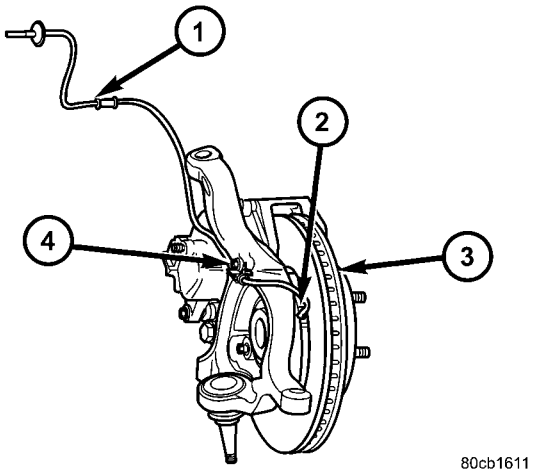

Fig. 2 FRONT WHEEL SPEED SENSOR

1 - WHEEL SPEED SENSOR WIRE
2 - WHEEL SPEED SENSOR
3 - ROTOR
4 - WHEEL SPEED SENSOR WIRE HOLD DOWN

(1) Install the wheel speed sensor (2) to the vehicle.

(2) Install the wheel speed sensor wire (1) thru the wheel well.

(3) Install the wheel speed sensor wire (1) to the hub/bearing.

(4) Install the wheel speed sensor wire hold down (4) to the knuckle.

(5) Install the wheel speed sensor mounting bolt to the hub. Tighten the mounting bolt to 13.5 N·m (120 in. lbs.).

FRONT WHEEL SPEED SENSOR (Continued)

(6) Install the disc brake rotor (3) (Refer to 5 - BRAKES/HYDRAULIC/MECHANICAL/ROTORS - INSTALLATION) (Fig. 2).

(7) Install the disc brake caliper adapter. (Refer to 5 - BRAKES/HYDRAULIC/MECHANICAL/DISC BRAKE CALIPER ADAPTER - INSTALLATION).

(8) Install the tire and wheel assembly (Refer to 22 - TIRES/WHEELS/WHEELS - STANDARD PROCEDURE).

(9) Reconnect the front wheel speed sensor wire connector to the inboard side of the wheel house being worked on.

REAR WHEEL SPEED SENSOR

REMOVAL

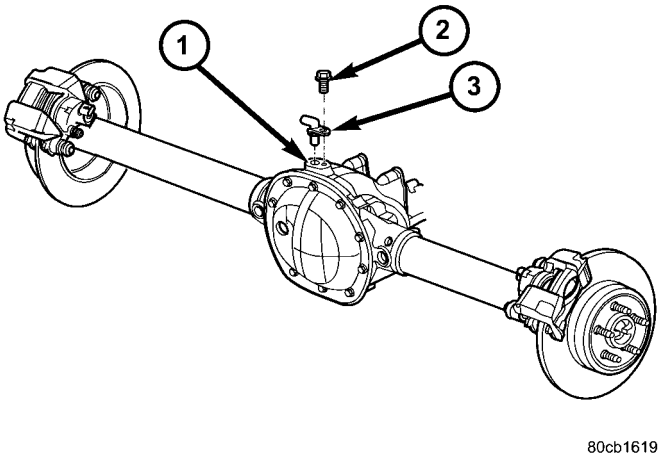

Fig. 3 REAR WHEEL SPEED SENSOR

1 - DIFFERENTIAL HOUSING
2 - MOUNTING BOLT
3 - WHEEL SPEED SENSOR

(1) Raise vehicle on hoist.

(2) Disconnect the sensor wire harness.

(3) Remove mounting stud (2) from the sensor (3) (Fig. 3).

(4) Remove sensor (3).

INSTALLATION

(1) Connect harness to sensor 3). **Be sure seal is securely in place between sensor and wiring connector.**

(2) Install O-ring on sensor (if removed).

(3) Insert sensor (3) in differential housing (1).

(4) Install the sensor mounting stud (2) and tighten to 9 N·m (80 in. lbs.) (Fig. 4).

(5) Install the sensor electical connector.

(6) Lower vehicle.

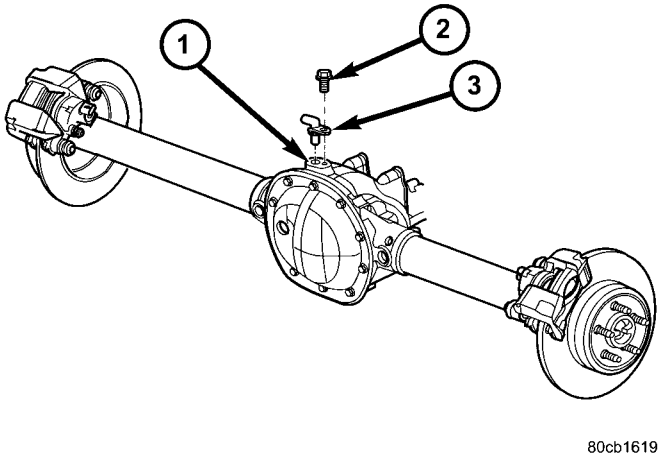

Fig. 4 REAR WHEEL SPEED SENSOR

1 - DIFFERENTIAL HOUSING
2 - MOUNTING BOLT
3 - WHEEL SPEED SENSOR

HCU (HYDRAULIC CONTROL UNIT)

DESCRIPTION

The HCU consists of a valve body, pump motor, and wire harness.

OPERATION

Accumulators in the valve body store extra fluid released to the system for ABS mode operation. The pump provides the fluid volume needed and is operated by a DC type motor. The motor is controlled by the ABM.

The valves modulate brake pressure during antilock braking and are controlled by the ABM.

The HCU provides three channel pressure control to the front and rear brakes. One channel controls the rear wheel brakes in tandem. The two remaining channels control the front wheel brakes individually.

During antilock braking, the solenoid valves are opened and closed as needed. The valves are not static. They are cycled rapidly and continuously to modulate pressure and control wheel slip and deceleration.

During normal braking, the HCU solenoid valves and pump are not activated. The master cylinder and power booster operate the same as a vehicle without an ABS brake system.

During antilock braking, solenoid valve pressure modulation occurs in three stages, pressure increase, pressure hold, and pressure decrease. The valves are all contained in the valve body portion of the HCU.

HCU (HYDRAULIC CONTROL UNIT) (Continued)

PRESSURE DECREASE

The outlet valve is opened and the inlet valve is closed during the pressure decrease cycle.

A pressure decrease cycle is initiated when speed sensor signals indicate high wheel slip at one or more wheels. At this point, the ABM closes the inlet then opens the outlet valve, which also opens the return circuit to the accumulators. Fluid pressure is allowed to bleed off (decrease) as needed to prevent wheel lock.

Once the period of high wheel slip has ended, the ABM closes the outlet valve and begins a pressure increase or hold cycle as needed.

PRESSURE HOLD

Both solenoid valves are closed in the pressure hold cycle. Fluid apply pressure in the control channel is maintained at a constant rate. The ABM maintains the hold cycle until sensor inputs indicate a pressure change is necessary.

PRESSURE INCREASE

The inlet valve is open and the outlet valve is closed during the pressure increase cycle. The pressure increase cycle is used to counteract unequal wheel speeds. This cycle controls re-application of fluid apply pressure due to changing road surfaces or wheel speed.

REMOVAL

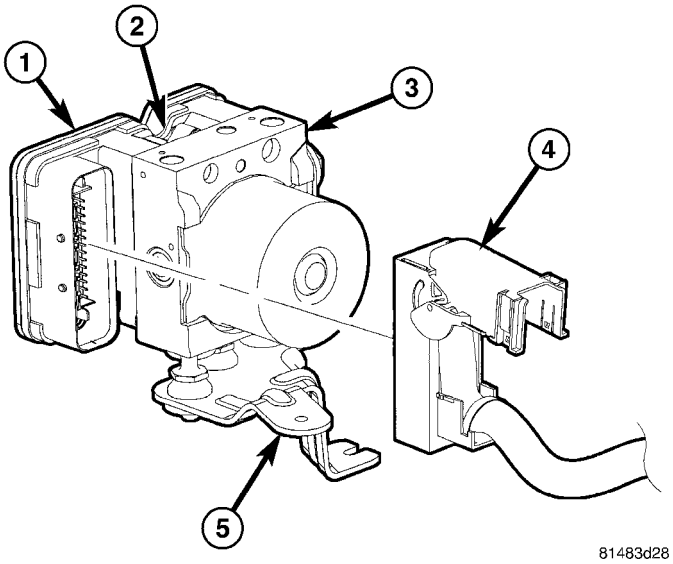

Fig. 5 ABM HARNESS CONNECTOR

1 - ABM MODULE
2 - ABM MODULE MOUNTING SCREWS
3 - ABM UNIT
4 - ELECTRICAL CONNECTOR
5 - MOUNTING BRACKET

(1) Install prop rod on the brake pedal to keep pressure on the brake system.

(2) Remove negative battery cable from the battery.

(3) Pull up on the ABM harness connector release (4) (Fig. 5) and remove connector.

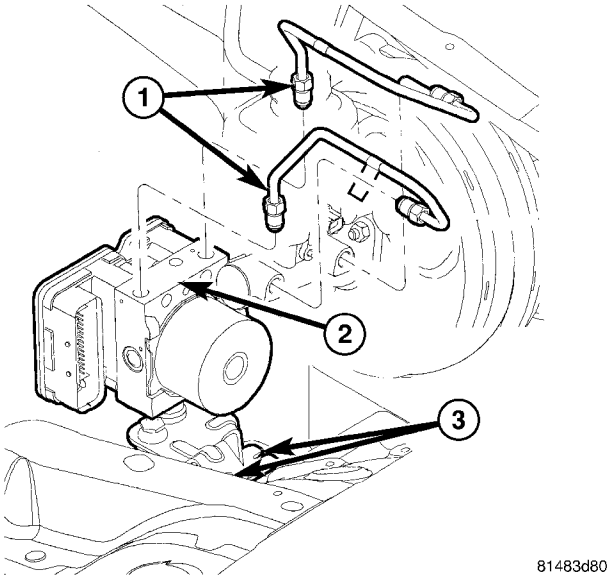

Fig. 6 ABM MOUNTING

1 - BRAKE LINES
2 - ABM UNIT
3 - MOUNTING NUTS

(4) Remove brake lines (1) from the ABM (2).

(5) Remove ABM (2) mounting nuts (3) (Fig. 6) and remove ABM(2)..

DISASSEMBLY

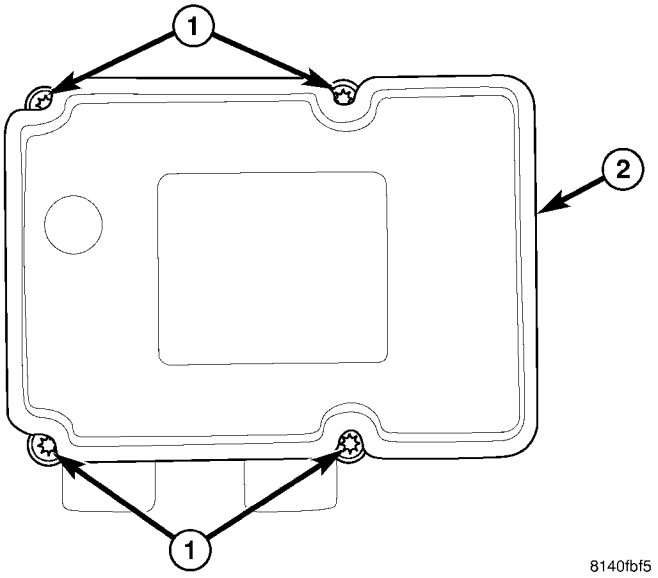

Fig. 7 MK25E ABM MOUNTING SCREWS

1 - MOUNTING SCREWS
2 - ABM

(1) Remove the four screws (1) attaching the ABM module to the HCU (2) (Fig. 7).

HCU (HYDRAULIC CONTROL UNIT) (Continued)

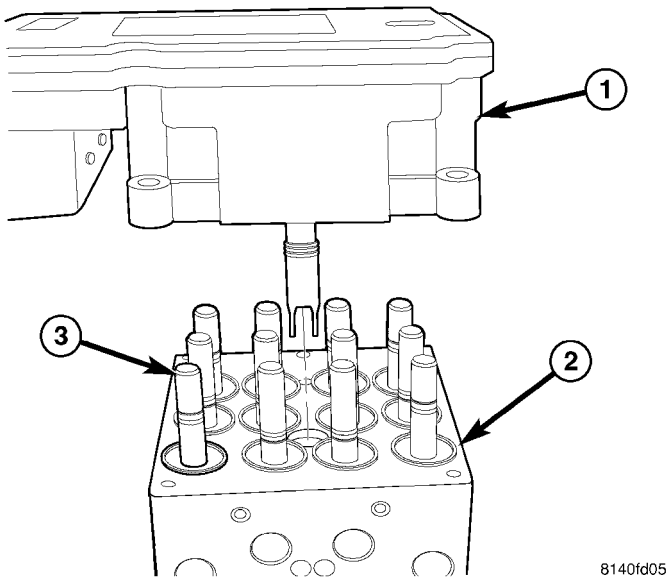

Fig. 8 ABM ASSEMBLY TO HCU

1 - ABM
2 - HCU
3 - SOLENOID VALVE STEM

(2) Separate the ABM module (1) from the HCU (2) (Fig. 8).

ASSEMBLY

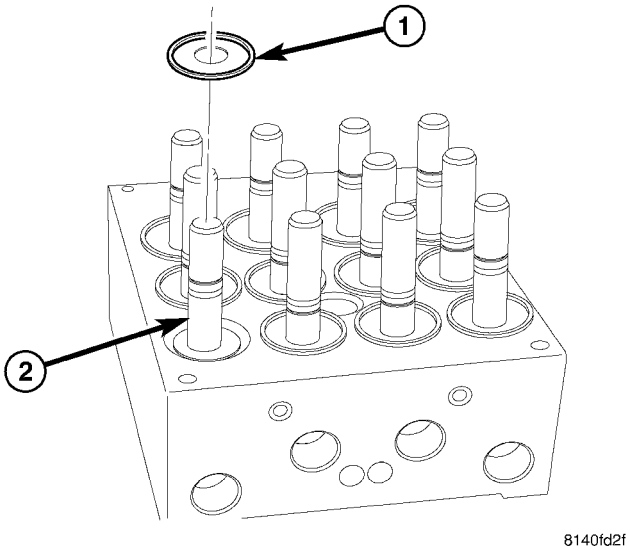

Fig. 9 MK25E SOLENOID VALVE SEAL

1 - SEAL
2 - SOLENOID VALVE STEM

(1) Clean any debris off the mating surfaces of the HCU and ABM module.

CAUTION: When installing new O-rings or solenoid valve stem seals, do not use any type of lubricant.

(2) If the seals on the components are not new, they must be replaced. Each of the solenoid valve stem seals (1) must be replaced (Fig. 9); **do not reuse solenoid valve stem seals**.

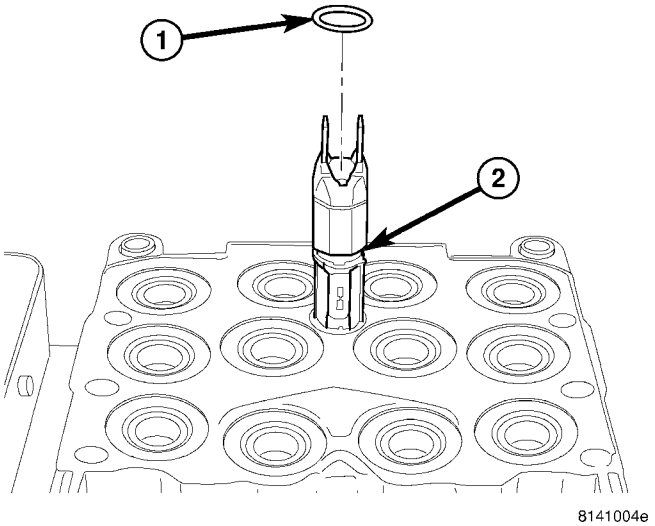

Fig. 10 MK25E INTERNAL PUMP CONNECTOR O-RING

1 - O-RING
2 - O-RING MOUNTING GROOVE

(3) The pump/motor connector O-ring (1) should also be replaced if not new (Fig. 10)

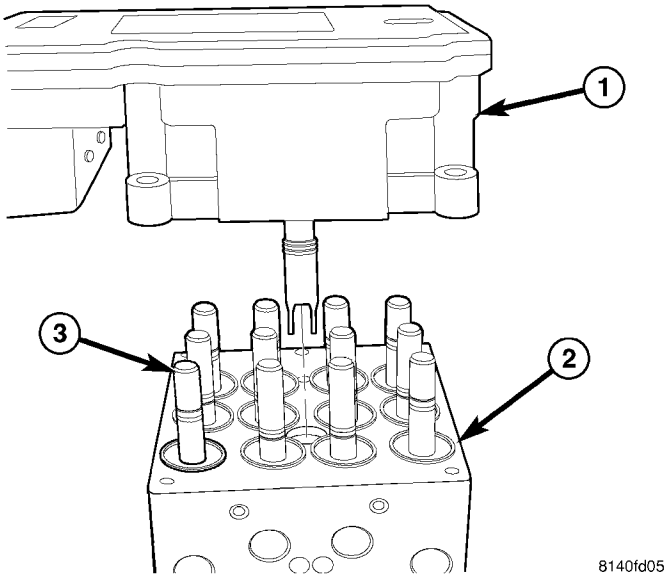

Fig. 11 ABM ASSEMBLY TO HCU

1 - ABM
2 - HCU
3 - SOLENOID VALVE STEM

(4) Align components and install the ABM module on the HCU (Fig. 11).

HCU (HYDRAULIC CONTROL UNIT) (Continued)

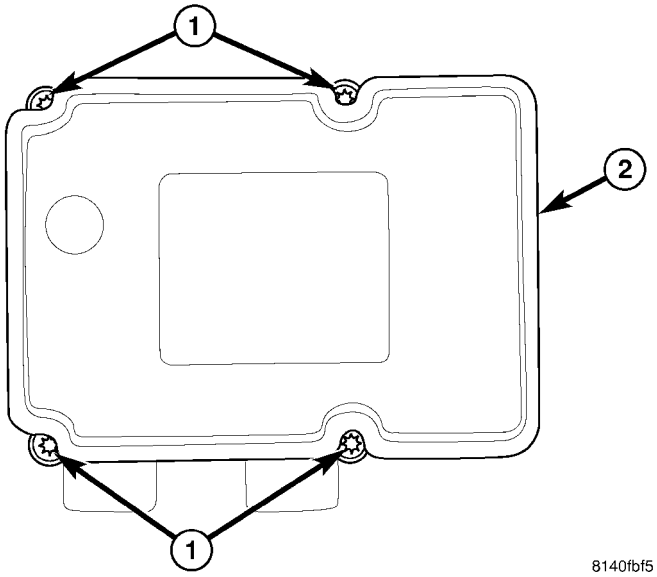

Fig. 12 MK25E ABM MOUNTING SCREWS

1 - MOUNTING SCREWS
2 - ABM

(5) Install the four screws attaching the ABM module to the HCU (Fig. 12). Tighten the mounting screws to 2 N·m (17 in. lbs.) torque.

(6) If the mounting bracket needs to be installed, install the mounting pins in the HCU as necessary and tighten to 11 N·m (97 in. lbs.) torque. Insert the mounting pins into the grommets mounted in the bracket, then install the single mounting bolt. Tighten the mounting bolt to 11 N·m (97 in. lbs.) torque.

(7) Install the HCU in the vehicle (Refer to 5 - BRAKES/HYDRAULIC/MECHANICAL/HCU (HYDRAULIC CONTROL UNIT) - INSTALLATION).

INSTALLATION

NOTE: If the ABM module is being replaced with a new ABM module it must be reprogrammed with the use of a scan tool.

(1) Install ABM (2) on the mounting studs (3) (Fig. 13).

(2) Install mounting nuts. Tighten to 14.1 N·m (125 in. lbs.) (Fig. 13).

(3) Install brake lines (1) to the ABM (2) and tighten to 20 N·m (180 in. lbs.) (Fig. 13).

(4) Install wiring harness connector (4) to the ABM (3) and push down on the release to secure the connector. (Fig. 14)

(5) Install negative battery cable to the battery.

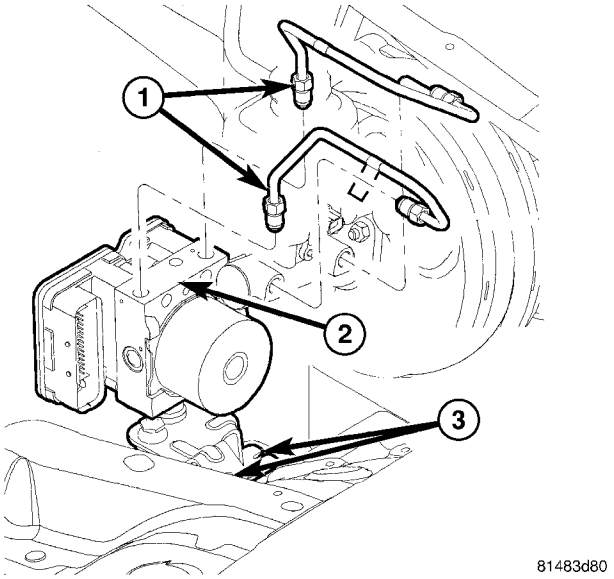

Fig. 13 ABM MOUNTING

1 - BRAKE LINES
2 - ABM UNIT
3 - MOUNTING NUTS

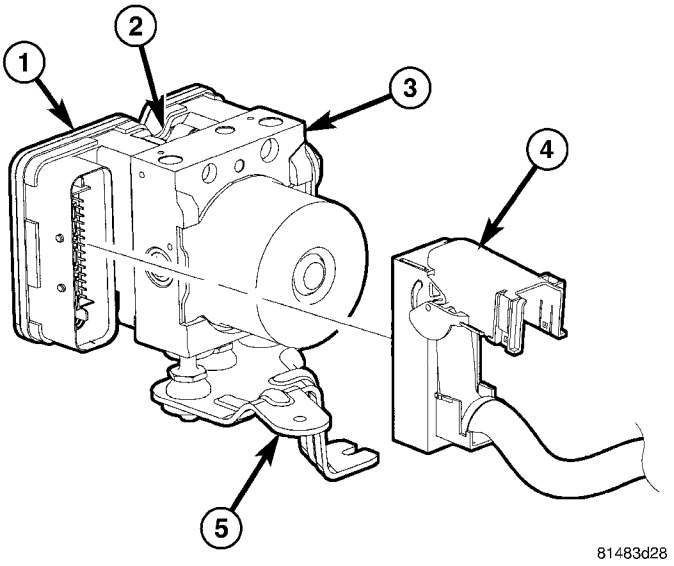

Fig. 14 ABM HARNESS CONNECTOR

1 - ABM MODULE
2 - ABM MODULE MOUNTING SCREWS
3 - ABM UNIT
4 - ELECTRICAL CONNECTOR
5 - MOUNTING BRACKET

(6) Bleed ABS brake system (Refer to 5 - BRAKES - STANDARD PROCEDURE).

CLUTCH

TABLE OF CONTENTS

	page
CLUTCH	
WARNING	1
DIAGNOSIS AND TESTING CLUTCH	1
SPECIFICATIONS	5
CLUTCH DISC	
REMOVAL	5
INSTALLATION	5
CLUTCH RELEASE BEARING	
REMOVAL	6
INSTALLATION	7
FLYWHEEL	
DESCRIPTION	7
DIAGNOSIS AND TESTING FLYWHEEL	8
PILOT BEARING	
REMOVAL	8
INSTALLATION	8
LINKAGE	
REMOVAL	9
INSTALLATION	9
MASTER CYLINDER	
INSPECTION	10
CLUTCH PEDAL	
REMOVAL	10
INSTALLATION	11
CLUTCH SWITCH OVERRIDE RELAY	
DESCRIPTION	11
OPERATION	11
REMOVAL	11
INSTALLATION	11
CLUTCH PEDAL POSITION SWITCH	
DESCRIPTION	12
OPERATION	12
DIAGNOSIS AND TESTING CLUTCH PEDAL POSITION SWITCH	12

CLUTCH

WARNING

WARNING: Exercise care when servicing clutch components. Factory installed clutch discs do not contain asbestos fibers. Dust and dirt on clutch parts may contain asbestos fibers from aftermarket components. Breathing excessive concentrations of these fibers can cause serious bodily harm. Wear a respirator during service and never clean clutch components with compressed air or with a dry brush. Either clean the components with water dampened rags or use a vacuum cleaner specifically designed to remove asbestos fibers and dust. Do not create dust by sanding a clutch discs. Replace the disc if the friction material is damaged. Dispose of all dust and dirt containing asbestos fibers in sealed bags or containers. This will minimize exposure to yourself and to others. Follow all recommended safety practices prescribed by the occupational safety and health administration (OSHA) and the environmental safety agency (EPA), for the handling and disposal of products containing asbestos. Failure to follow these instructions may result in personal injury or death

DIAGNOSIS AND TESTING

CLUTCH

Drive the vehicle at normal speeds. Shift the transmission through all gear ranges and observe clutch action. If the clutch chatters, grabs, slips or does not release properly, remove and inspect the clutch components. If the problem is noise or hard shifting, further diagnosis may be needed as the transmission or another driveline component may be at fault.

NOTE: Vehicles equipped with a Dual Mass Flywheel may produce a rattle when the engine is shut off. This noise is considered normal.

CLUTCH CONTAMINATION

Fluid contamination is a frequent cause of clutch malfunctions. Oil, water or clutch fluid on the clutch disc and pressure plate surfaces will cause chatter, slip and grab. Inspect components for oil, hydraulic fluid or water/road splash contamination.

Oil contamination indicates a leak at either the rear main seal or transmission input shaft. Clutch fluid leaks are usually from damaged slave cylinder push rod seals. Heat buildup caused by slippage between the pressure plate, disc and flywheel can bake the oil residue onto the components. The glaze-like residue ranges in color from amber to black.

CLUTCH (Continued)

Road splash contamination is dirt/water entering the clutch housing due to loose bolts, housing cracks. Driving through deep water puddles can force water/road splash into the housing through such openings.

IMPROPER RELEASE OR CLUTCH ENGAGEMENT

Clutch release or engagement problems are caused by wear or damage clutch components. A visual inspection of the release components will usually reveal the problem part.

Release problems can result in hard shifting and noise. Look for leaks at the clutch cylinders and interconnecting line and loose slave cylinder bolts. Also worn/loose release fork, pivot stud, clutch disc, pressure plate or release bearing.

Engagement problems can result in slip, chatter/shudder and noisy operation. The causes may be clutch disc contamination, wear, distortion or flywheel damage. Visually inspect to determine the actual cause of the problem.

CLUTCH MISALIGNMENT

Clutch components must be in proper alignment with the crankshaft and transmission input shaft. Misalignment caused by excessive runout or warpage of any clutch component will cause grab, chatter and improper clutch release.

PRESSURE PLATE AND DISC RUNOUT

Check the clutch disc before installation. Axial (face) runout of a **new** disc should not exceed 0.50 mm (0.020 in.). Measure runout about 6 mm (1/4 in.) from the outer edge of the disc facing. Obtain another disc if runout is excessive.

Check condition of the clutch before installation. A warped cover or diaphragm spring will cause grab and incomplete release or engagement. Be careful when handling the cover and disc. Impact can distort the cover, diaphragm spring, release fingers and the hub of the clutch disc.

Use an alignment tool when positioning the disc on the flywheel. The tool prevents accidental misalignment which could result in cover distortion and disc damage.

A frequent cause of clutch cover distortion (and consequent misalignment) is improper bolt tightening.

FLYWHEEL RUNOUT

Check flywheel runout whenever misalignment is suspected. Flywheel runout should not exceed 0.08 mm (0.003 in.). Measure runout at the outer edge of the flywheel face with a dial indicator. Mount the indicator on a stud installed in place of one of the flywheel bolts.

Common causes of runout are:

- heat warpage
- improper machining
- incorrect bolt tightening
- improper seating on crankshaft flange shoulder
- foreign material on crankshaft flange

Flywheel machining is not recommended. The flywheel clutch surface is machined to a unique contour and machining will negate this feature. Minor flywheel scoring can be cleaned up by hand with 180 grit emery or with surface grinding equipment. Remove only enough material to reduce scoring (approximately 0.001 - 0.003 in.). Heavy stock removal is **not recommended.** Replace the flywheel if scoring is severe and deeper than 0.076 mm (0.003 in.). Excessive stock removal can result in flywheel cracking or warpage after installation; it can also weaken the flywheel and interfere with proper clutch release.

Clean the crankshaft flange before mounting the flywheel. Dirt and grease on the flange surface may cock the flywheel causing excessive runout. Use new bolts when remounting a flywheel and secure the bolts with Mopar Lock And Seal or equivalent. Tighten flywheel bolts to specified torque only. Overtightening can distort the flywheel hub causing runout.

DIAGNOSIS CHART

The diagnosis charts Diagnosis Chart describe common clutch problems, causes and correction. Conditions, causes and corrective action are outlined in the indicated columns.

CLUTCH (Continued)

DIAGNOSIS CHART

CONDITION	POSSIBLE CAUSES	CORRECTION
Disc facing worn out	1. Normal wear.	1. Replace cover and disc.
	2. Driver frequently rides (slips) the clutch. Results in rapid overheating and wear.	2. Replace cover and disc.
	3. Insufficient clutch cover diaphragm spring tension.	3. Replace cover and disc.
Clutch disc facing contaminated with oil, grease, or clutch fluid.	1. Leak at rear main engine seal or transmission input shaft seal.	1. Replace appropriate seal.
	2. Excessive amount of grease applied to the input shaft splines.	2. Remove grease and apply the correct amount of grease.
	3. Road splash, water entering housing.	3. Replace clutch disc. Clean clutch cover and reuse if in good condition.
	4. Slave cylinder leaking.	4. Replace hydraulic clutch linkage.
Clutch is running partially disengaged.	1. Release bearing sticking or binding and does not return to the normal running position.	1. Verify failure. Replace the release bearing and transmission front bearing retainer as necessary.
Flywheel below minimum thickness specification.	1. Improper flywheel machining. Flywheel has excessive taper or excessive material removal.	1. Replace flywheel.
Clutch disc, cover and/or diaphragm spring warped or distorted.	1. Rough handling. Impact bent cover, spring, or disc.	1. Replace disc or cover as necessary.
	2. Improper bolt tightening procedure.	2. Tighten clutch cover using proper procedure.
Facing on flywheel side of disc torn, gouged, or worn.	1. Flywheel surface scored or nicked.	1. Correct surface condition if possible. Replace flywheel and disc as necessary.
	2. Clutch disc sticking or binding on transmission input shaft.	2. Lubricate splines with high temperature graese.
Clutch disc facing burnt. Flywheel and cover pressure plate surfaces heavily glazed.	1. Frequent operation under high loads or hard acceleration conditions.	1. Correct condition of flywheel and pressure plate surface. Replace clutch cover and disc. Alert driver to problem cause.
	2. Driver frequently rides (slips) clutch. Results in rapid wear and overheating of disc and cover.	2. Correct condition of flywheel and pressure plate surface. Replace clutch cover and disc. Alert driver to problem cause.

CLUTCH (Continued)

CONDITION	POSSIBLE CAUSES	CORRECTION
Clutch disc binds on input shaft splines.	1. Clutch disc hub splines damaged during installation.	1. Clean, smooth, and lubricate hub splines if possible. Replace disc if necessary.
	2. Input shaft splines rough, damaged, or corroded.	2. Clean, smooth, and lubricate shaft splines if possible. Replace input shaft if necessary.
Clutch disc rusted to flywheel and/or pressure plate.	1. Clutch not used for and extended period of time (e.g. long term vehicle storage).	1. Sand rusted surfaces with 180 grit sanding paper. Replace clutch cover and flywheel if necessary.
Pilot bearing seized, loose, or rollers are worn.	1. Bearing cocked during installation.	1. Install and lubricate a new bearing.
	2. Bearing defective.	2. Install and lubricate a new bearing.
	3. Bearing not lubricated.	3. Install and lubricate a new bearing.
	4. Clutch misalignment.	4. Inspect clutch and correct as necessary. Install and lubricate a new bearing.
Clutch will not disengage properly.	1. Low clutch fluid level.	1. Replace hydraulic linkage assembly.
	2. Clutch cover loose.	2. Follow proper bolt tightening procedure.
	3. Clutch disc bent or distorted.	3. Replace clutch disc.
	4. Clutch cover diaphragm spring bent or warped.	4. Replace clutch cover.
	5. Clutch disc installed backwards.	5. Remove and install clutch disc correctly.
	6. Release fork bent or fork pivot loose or damaged.	6. Replace fork or pivot as necessary.
	7. Clutch master or slave cylinder failure.	7. Replace hydraulic linkage assembly.
Clutch pedal squeak.	1. Pivot pin loose.	1. Tighten pivot pin if possible. Replace clutch pedal if necessary.
	2. Master cylinder bushing not lubricated.	2. Lubricate master cylinder bushing.
	3. Pedal bushings worn out or cracked.	3. Replace and lubricate bushings.
Clutch master or slave cylinder plunger dragging andør binding	1. Master or slave cylinder components worn or corroded.	1. Replace clutch hydraulic linkage assembly.
Release bearing is noisy.	1. Release bearing defective or damaged.	1. Replace release bearing.

CLUTCH (Continued)

CONDITION	POSSIBLE CAUSES	CORRECTION
Contact surface of release bearing damaged.	1. Clutch cover incorrect or release fingers bent or distorted. 2. Release bearing defective or damaged. 3. Release bearing misaligned.	1. Replace clutch cover and release bearing. 2. Replace the release bearing. 3. Check and correct runout of clutch components. Check front bearing sleeve for damage/ alignment. Repair as necessary.
Partial engagement of clutch disc. One side of disc is worn and the other side is glazed and lightly worn.	1. Clutch pressure plate position incorrect. 2. Clutch cover, spring, or release fingers bent or distorted. 3. Clutch disc damaged or distorted. 4. Clutch misalignment.	1. Replace clutch disc and cover. 2. Replace clutch disc and cover. 3. Replace clutch disc. 4. Check alignment and runout of flywheel, disc, pressure plate, andør clutch housing. Correct as necessary.

SPECIFICATIONS

TORQUE SPECIFICATIONS

DESCRIPTION	N·m	Ft. Lbs.	In. Lbs.
Pressure Plate Bolts - 2.4L	31	23	-
Pressure Plate Bolts - 3.7L	50	37	-
Pressure Plate Bolts - 2.5L Diesel	54	40	-
Clutch Cylinder Bolts	23	-	200
Flywheel Bolts - 2.4L	81	60	-
Flywheel Bolts - 3.7L	81	60	-
Flywheel Bolts - 2.5L Diesel	45	33	-

CLUTCH DISC

REMOVAL

(1) Remove transmission.

(2) Mark position of pressure plate (1) (Fig. 1) on flywheel with paint or a scriber for assembly reference, if clutch is not being replaced.

(3) Loosen pressure plate bolts evenly and in rotation to relieve spring tension and avoid warping the plate.

(4) Remove pressure plate bolts and pressure plate and disc.

INSTALLATION

(1) Lightly scuff sand flywheel face with 180 grit emery cloth, then clean with a wax and grease remover.

(2) Lubricate pilot bearing with Mopar high temperature bearing grease or equivalent.

(3) Check runout and operation of **new** clutch disc.

CLUTCH DISC (Continued)

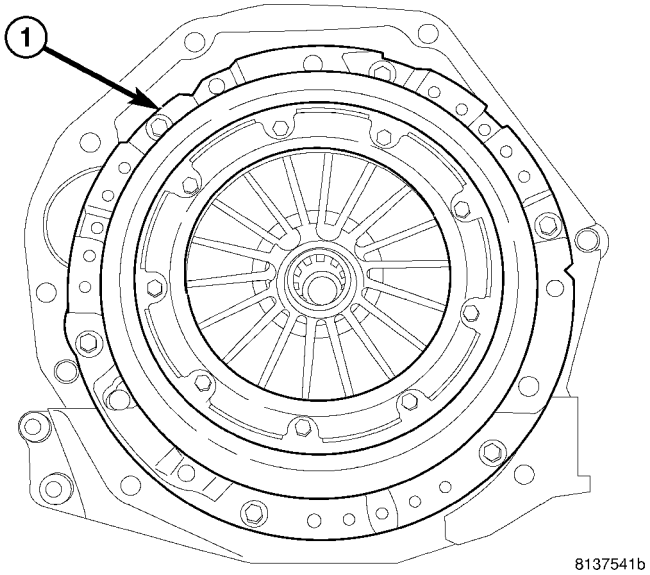

Fig. 1 PRESSURE PLATE

1. PRESSURE PLATE

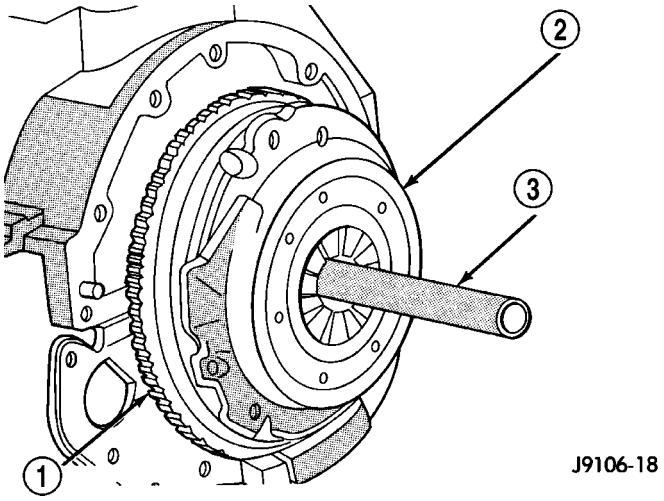

Fig. 2 ALIGNING CLUTCH DISC

1 - FLYWHEEL
2 - PRESSURE PLATE
3 - CLUTCH DISC ALIGNMENT TOOL

NOTE: Disc must slide freely on transmission input shaft splines.

(4) With the disc on the input shaft, check face runout with dial indicator. Check runout at disc hub 6 mm (1/4 in.) from outer edge of facing. Obtain another clutch disc if runout exceed 0.5 mm (0.020 in.).

(5) Position clutch disc on flywheel with side marked flywheel against the flywheel.

NOTE: If not marked, the flat side of disc hub goes towards the flywheel on the 3.7L engine and towards the transmission on 2.4L engine.

(6) Insert clutch alignment tool (3) through the clutch disc and into the pilot bearing.

(7) Position clutch pressure plate (2) over disc and on the flywheel (1) (Fig. 2).

(8) Install pressure plate bolts finger tight.

CAUTION: Use only the factory bolts to mount the pressure plate. The bolts must be the correct size. If bolts are too short, there isn't enough thread engagement, if too long bolts interfere with the Dual Mass Flywheel.

(9) Tighten pressure plate bolts evenly and in rotation a few threads at a time.

CAUTION: The bolts must be tightened evenly and to specified torque. Failure to follow these instructions will distort the pressure plate.

(10) Tighten pressure plate bolts to 31 N·m (23 ft. lbs.) on 2.4L engines and 50 N·m (37ft. lbs.) on 3.7L engines.

(11) Apply light coat of Mopar high temperature bearing grease or equivalent to clutch disc hub and splines of transmission input shaft.

CAUTION: Do not over lubricate shaft splines. This will result in grease contamination of disc.

(12) Install transmission.

CLUTCH RELEASE BEARING

REMOVAL

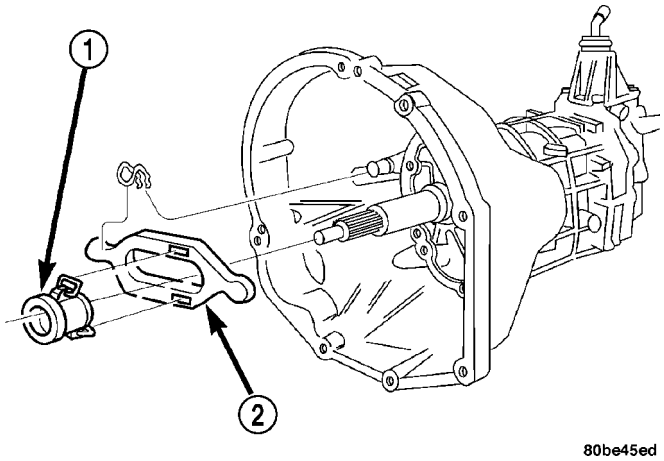

Fig. 3 CLUTCH RELEASE BEARING

1 - RELEASE BEARING
2 - RELEASE FORK

(1) Remove transmission.

(2) Disconnect release bearing (1) from release fork (2) and remove the bearing (Fig. 3).

CLUTCH RELEASE BEARING (Continued)

(3) Inspect bearing slide surface of transmission front bearing retainer. Replace retainer if slide surface is scored, worn, or cracked.

(4) Inspect release fork and fork pivot. Be sure pivot is secure and in good condition. Be sure fork is not distorted or worn. Replace release fork retainer spring if bent or damaged.

INSTALLATION

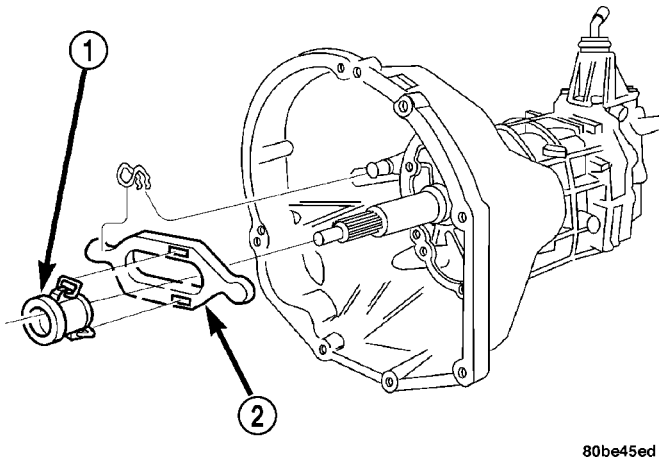

Fig. 4 CLUTCH RELEASE BEARING

1 - RELEASE BEARING
2 - RELEASE FORK

(1) Lubricate crankshaft pilot bearing with Mopar high temperature bearing grease or equivalent. Apply grease to end of long shank, small diameter flat blade screwdriver. Then insert tool through clutch disc hub to reach bearing.

(2) Lubricate input shaft splines, bearing retainer slide surface, fork pivot and release fork pivot surface.

(3) Install new release bearing (1) and secured to release fork (2) (Fig. 4).

(4) Install transmission.

FLYWHEEL

DESCRIPTION

STANDARD FLYWHEEL

The standard flywheel is used on the 3.7L engine. The flywheel (3) is a heavy plate bolted to the rear of the crankshaft (1). The flywheel incorporates the ring gear (2) around the outer circumference to mesh with the starter to permit engine cranking. The rear face of the flywheel serves as the driving member to the clutch disc (Fig. 5).

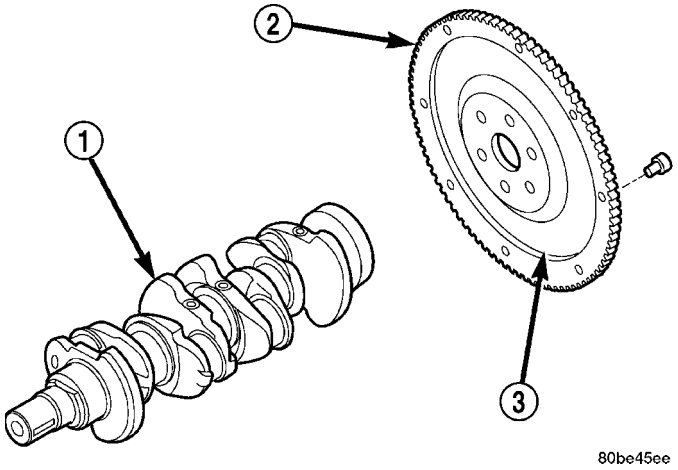

Fig. 5 FLYWHEEL

1 - CRANKSHAFT
2 - RING GEAR
3 - FLYWHEEL

DUAL MASS FLYWHEEL

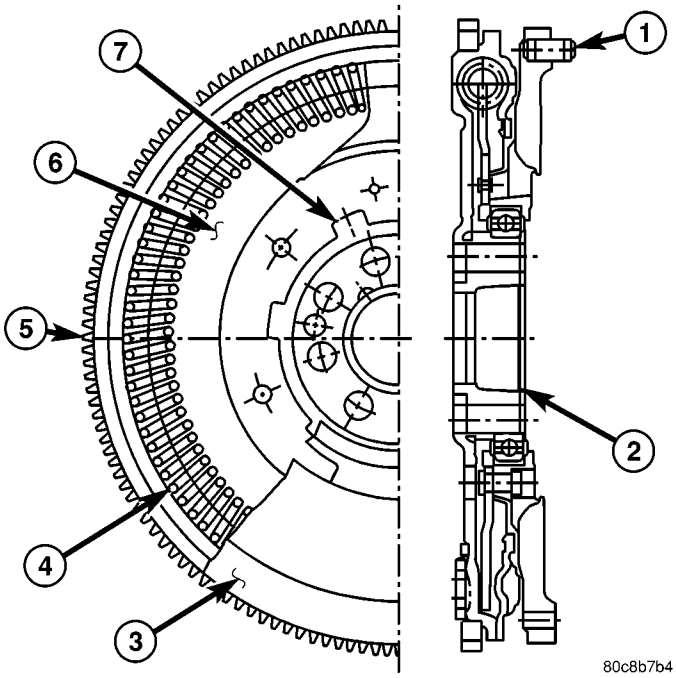

Fig. 6 DUAL MASS FLYWHEEL

1 - LOCATING STUD
2 - BEARING
3 - SECONDARY FLYWHEEL
4 - DAMPER SPRING
5 - RING GEAR
6 - PRIMARY FLYWHEEL
7 - FRICTION DISC

FLYWHEEL (Continued)

The Dual Mass Flywheel (Fig. 6) is used on the 2.4L engine and 2.8L Diesel. The flywheel incorporates the ring gear (5) around the outer circumference to mesh with the starter to permit engine cranking. The primary flywheel (6) side is bolted to the crankshaft. The secondary flywheel (3) side serves as the driving member to the clutch disc. Internal springs (4) between the flywheels are use to dampen energy. The Dual Mass Flywheel is serviced as an assembly only and should never be taken apart.

DIAGNOSIS AND TESTING

FLYWHEEL

Check flywheel runout whenever misalignment is suspected. Flywheel runout should not exceed 0.08 mm (0.003 in.). Measure runout at the outer edge of the flywheel face with a dial indicator. Mount the indicator on a stud installed in place of one of the flywheel bolts.

Common causes of runout are:

- heat warpage
- improper machining
- incorrect bolt tightening
- improper seating on crankshaft flange shoulder
- foreign material on crankshaft flange

Flywheel machining is not recommended. The flywheel clutch surface is machined to a unique contour and machining will negate this feature. Minor flywheel scoring can be cleaned up by hand with 180 grit emery or with surface grinding equipment. Remove only enough material to reduce scoring (approximately 0.001 - 0.003 in.). Heavy stock removal is **not recommended.** Replace the flywheel if scoring is severe and deeper than 0.076 mm (0.003 in.). Excessive stock removal can result in flywheel cracking or warpage after installation; it can also weaken the flywheel and interfere with proper clutch release.

Clean the crankshaft flange before mounting the flywheel. Dirt and grease on the flange surface may cock the flywheel causing excessive runout. Use new bolts when remounting a flywheel and secure the bolts with Mopar Lock And Seal or equivalent. Tighten flywheel bolts to specified torque only. Overtightening can distort the flywheel hub causing runout.

PILOT BEARING

REMOVAL

(1) Remove transmission.
(2) Remove pressure plate and clutch disc.
(3) Remove pilot bearing with an internal (blind hole) puller.

INSTALLATION

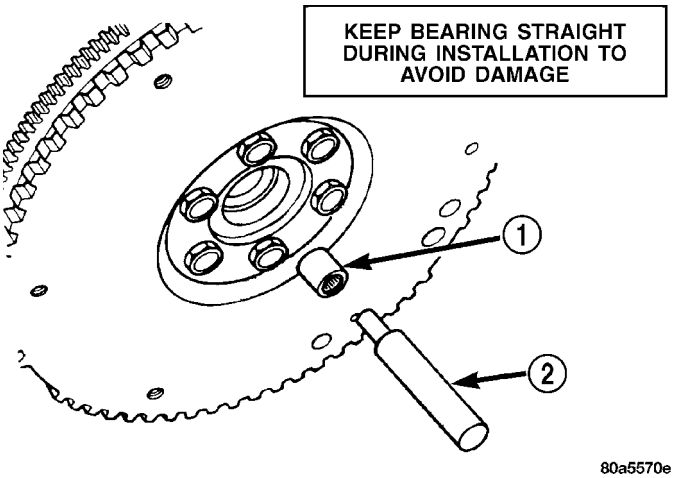

Fig. 7 PILOT BEARING INSTALLER

1 - PILOT BEARING
2 - ALIGNMENT TOOL

(1) Lubricate new bearing with Mopar high temperature bearing grease or equivalent.
(2) Start new pilot bearing (1) into crankshaft by hand. Then seat bearing with clutch alignment tool (2) (Fig. 7).
(3) Install clutch disc and pressure plate.
(4) Install transmission.

LINKAGE

REMOVAL

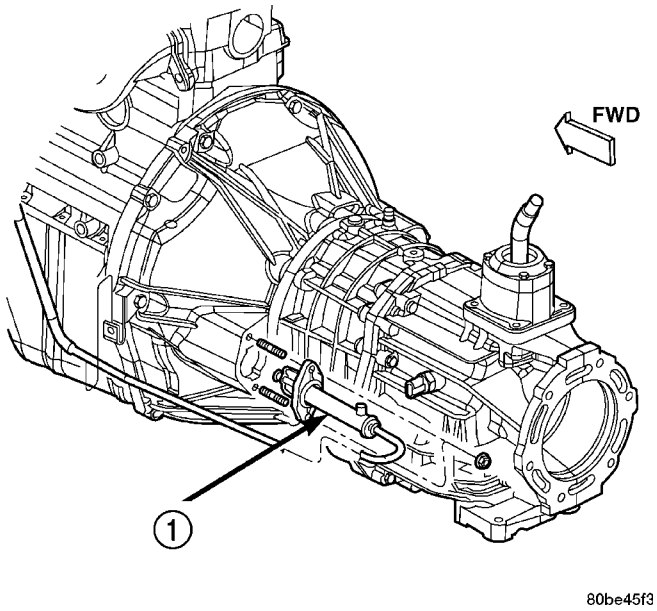

Fig. 8 SLAVE CYLINDER

1 - CLUTCH SLAVE CYLINDER

NOTE: The clutch master cylinder, slave cylinder and connecting line are serviced as an assembly only. The linkage components cannot be overhauled or serviced separately. The cylinders and connecting line are sealed units.

(1) With vehicle in neutral, position vehicle on hoist.

(2) Remove slave cylinder (1) from clutch housing (Fig. 8).

(3) Disengage clutch fluid line from body clips, if applicable.

(4) Lower vehicle.

(5) Tighten clutch master cylinder (1) reservoir cap to avoid spilling fluid.

(6) Remove clutch master cylinder attaching nuts.

(7) Disengage clutch master cylinder actuator (4) from pivot pin (3) on pedal arm.

(8) Disconnect clutch interlock safety switch wires (5) (Fig. 9).

(9) Remove clutch hydraulic linkage through engine compartment.

INSTALLATION

NOTE: The clutch master cylinder, slave cylinder and connecting line are serviced as an assembly only. The linkage components cannot be overhauled or serviced separately. The cylinders and connecting line are sealed units.

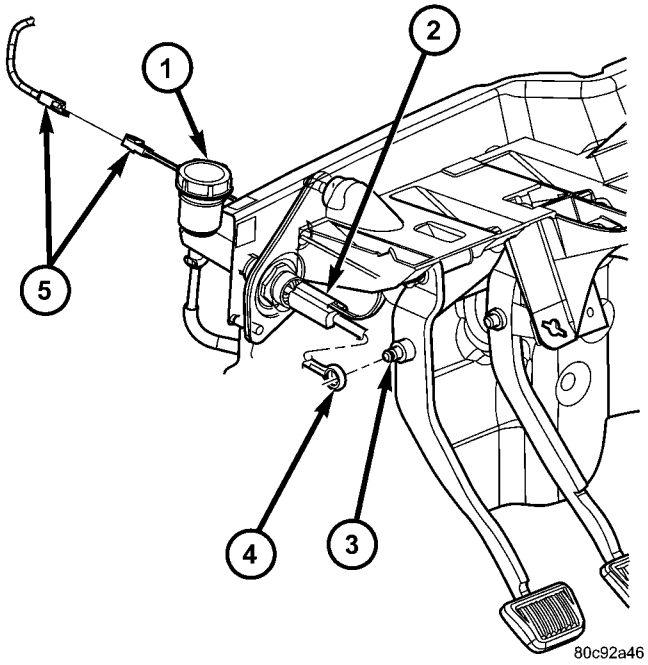

Fig. 9 CLUTCH PEDAL

1 - CYLINDER
2 - ACTUATOR SHAFT
3 - PEDAL PIN
4 - ACTUATOR EYE
5 - CONNECTOR

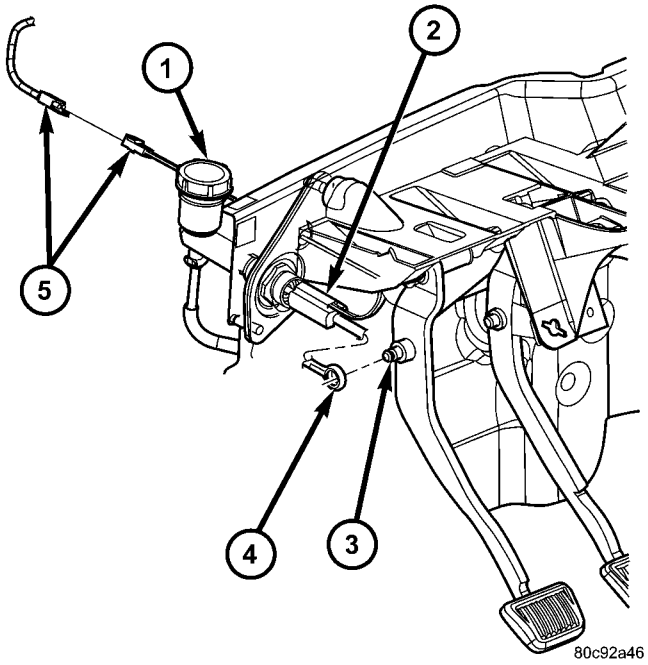

Fig. 10 CLUTCH PEDAL

1 - CYLINDER
2 - ACTUATOR SHAFT
3 - PEDAL PIN
4 - ACTUATOR EYE
5 - CONNECTOR

LINKAGE (Continued)

(1) Tighten master cylinder reservoir cap to avoid spills.

(2) Position clutch linkage components in vehicle. Work connecting line and slave cylinder downward past engine and adjacent to clutch housing.

(3) Position clutch master cylinder (1) on dash panel.

(4) Attach clutch master cylinder actuator (4) to pivot pin (3) on clutch pedal (Fig. 10).

(5) Install clutch master cylinder nuts and tighten to 38 N·m (28 ft. lbs.).

(6) Raise vehicle.

(7) Insert slave cylinder push rod through clutch housing opening and securely engaged into release lever.

(8) Install slave cylinder nuts and tighten to 23 N·m (17 ft. lbs.).

(9) Secure clutch fluid line in body and transmission clips.

(10) Connect clutch interlock safety switch wires (5) (Fig. 10).

MASTER CYLINDER

INSPECTION

The clutch fluid reservoir, master cylinder, slave cylinder and fluid lines are pre-filled with fluid at the factory during assembly operations.

The hydraulic system should not require additional fluid under normal circumstances. **The reservoir fluid level will actually increase as normal clutch wear occurs. Avoid overfilling or removing fluid from the reservoir.**

Clutch fluid level is checked at the master cylinder reservoir. An indicator ring is provided on the outside of the reservoir. With the cap and diaphragm removed, fluid level should not be above indicator ring.

To avoid contaminating the hydraulic fluid during inspection, wipe reservoir and cover clean before removing the cap.

CLUTCH PEDAL

REMOVAL

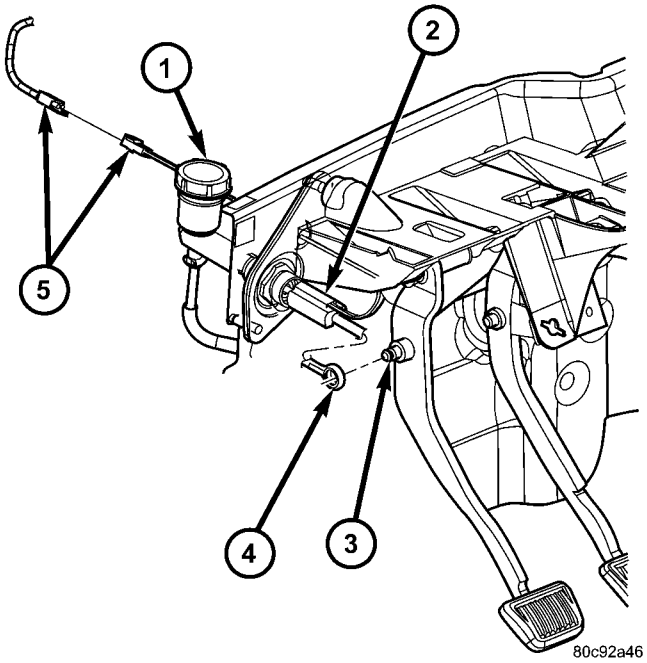

Fig. 11 CLUTCH PEDAL

1 - CYLINDER
2 - ACTUATOR SHAFT
3 - PEDAL PIN
4 - ACTUATOR EYE
5 - CONNECTOR

(1) Remove steering column lower cover and knee blocker for access.

(2) Disconnect clutch pedal position switch wires.

(3) Disengage bushing lock tabs attaching clutch master cylinder actuator (4) to pedal pivot (3) (Fig. 11).

(4) Remove nuts attaching pedal and bracket to dash panel and upper cowl support.

(5) Separate pedal assemble from vehicle.

CLUTCH PEDAL (Continued)

INSTALLATION

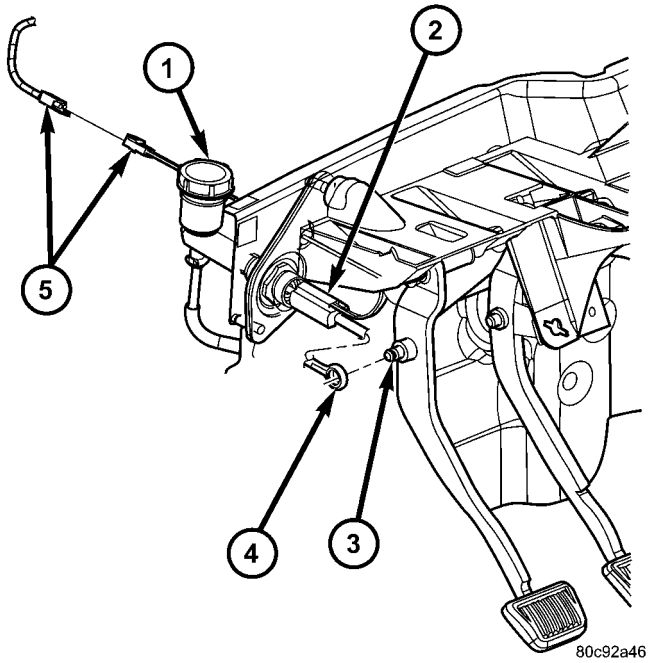

Fig. 12 CLUTCH PEDAL

1 - CYLINDER
2 - ACTUATOR SHAFT
3 - PEDAL PIN
4 - ACTUATOR EYE
5 - CONNECTOR

(1) Place clutch pedal and bracket over studs on dash panel and cowl support.

(2) Install pedal and bracket to dash panel nuts and tighten to 39 N·m (29 ft. lbs.).

(3) Engage captured bushing (4) and actuator on brake pedal pivot (3) (Fig. 12).

(4) Connect clutch pedal position switch wires (5).

CLUTCH SWITCH OVERRIDE RELAY

DESCRIPTION

The clutch pedal position switch override relay is located in the Power Distribution Center (PDC). Refer to PDC cover label for location within PDC.

OPERATION

The clutch pedal position switch override relay, inhibits operation of the clutch pedal position switch when the vehicle transfer case is in the four wheel drive low-range position. This enables the starter motor to operate without depressing the clutch pedal, for off-road applications. If Diagnostic Trouble Codes (DTC's) for the override relay or transfer case switch are stored, override relay will be inhibited.

REMOVAL

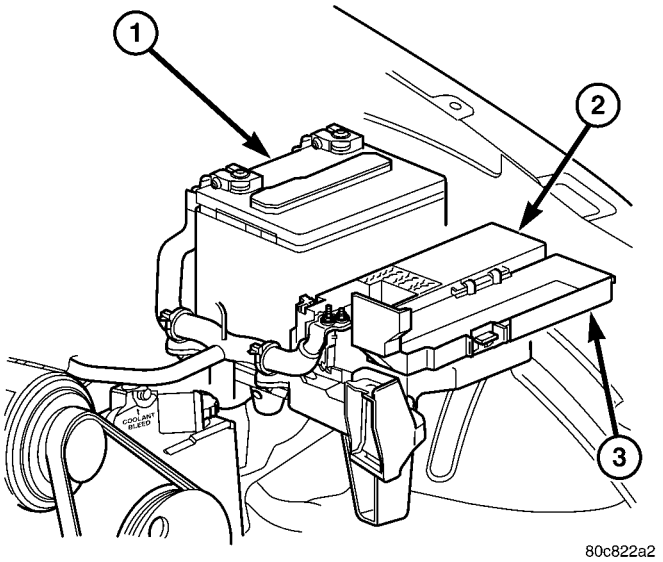

Fig. 13 POWER DISTRIBUTION CENTER (PDC)

1 - BATTERY
2 - PDC
3 - PDC COVER

NOTE: Refer to label on PDC cover for relay location.

(1) Remove PDC (2) cover (3) (Fig. 13).
(2) Remove relay from PDC.
(3) Check relay and PDC terminals for:
- Damage or corrosion
- Pin height (all terminals should be same height)

INSTALLATION

(1) Install relay in PDC.
(2) Install PDV cover.
(3) Verify operation of relay.

CLUTCH PEDAL POSITION SWITCH

DESCRIPTION

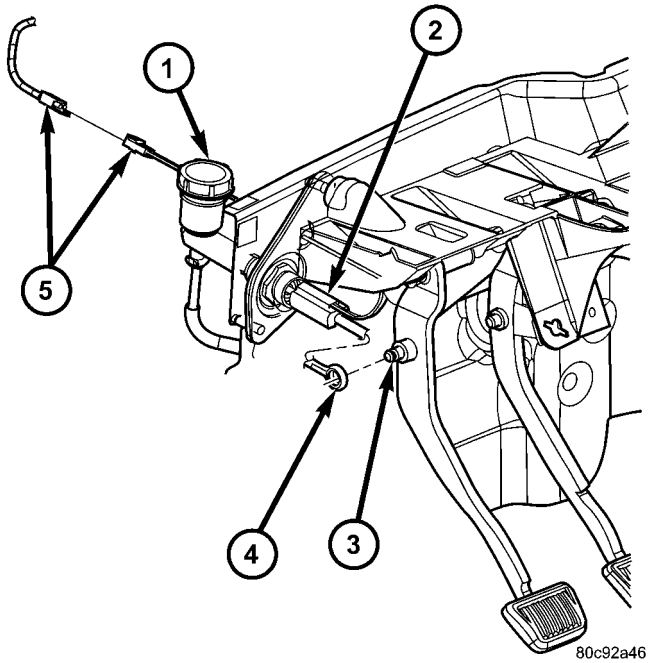

Fig. 14 CLUTCH PEDAL POSITION SWITCH

1 - CLUTCH MASTER CYLINDER
2 - CLUTCH PEDAL POSITION SWITCH
3 - CLUTCH PEDAL PIN
4 - MASTER CYLINDER PUSHROD
5 - ELECTRICAL CONNECTION (IN ENGINE COMPARTMENT)

The clutch pedal position switch (2) is located under the instrument panel, attached to the clutch master cylinder (1) push rod (Fig. 14). The wiring harness connection for the switch is in the engine compartment (Fig. 14).

The clutch pedal position switch override relay is located in the Power Distribution Center (PDC). Refer to PDC cover label for location within PDC.

OPERATION

The clutch pedal position switch is used to prevent starter motor engagement unless the clutch pedal is depressed. An input from this switch is also used to either shut down/prevent operation of the speed control system when the clutch pedal is depressed.

Four Wheel Drive Feature: The clutch pedal position switch override relay, inhibits operation of the position switch when the vehicle transfer case is in the four wheel drive low-range position. This enables the starter motor to operate without depressing the clutch pedal, for off-road applications. If Diagnostic Trouble Codes (DTC's) for the override relay or transfer case switch are stored, override relay will be inhibited.

DIAGNOSIS AND TESTING

CLUTCH PEDAL POSITION SWITCH

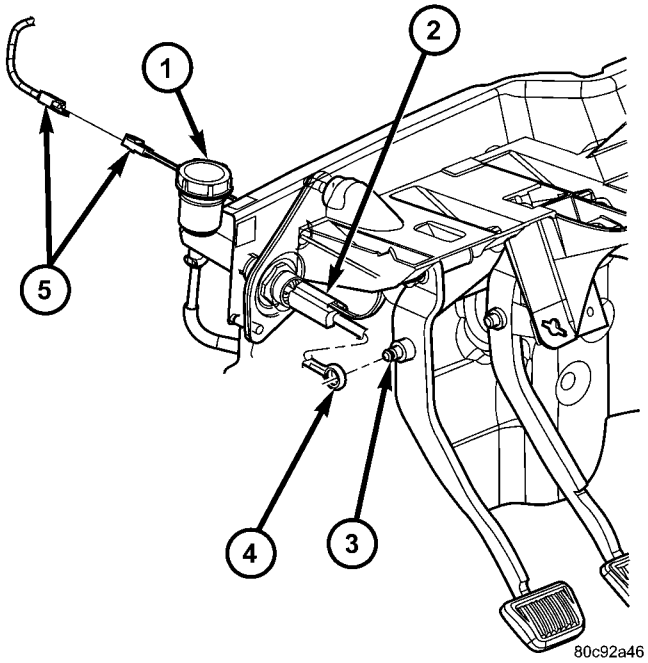

Fig. 15 CLUTCH PEDAL POSITION SWITCH

1 - CLUTCH MASTER CYLINDER
2 - CLUTCH PEDAL POSITION SWITCH
3 - CLUTCH PEDAL PIN
4 - MASTER CYLINDER PUSHROD
5 - ELECTRICAL CONNECTION (IN ENGINE COMPARTMENT)

(1) Disconnect switch 2-wire connector (5) in engine compartment (Fig. 15).

(2) Check switch continuity with an ohmmeter while operating clutch pedal.

- Pedal Depressed - Continuity
- Pedal Released - No Continuity

(3) If continuity is not present or always present, replace clutch master cylinder. Switch is not serviced separately.

COOLING

TABLE OF CONTENTS

page

COOLING
DESCRIPTION
2.4L ENGINE 1
3.7L ENGINE 1
DESCRIPTION - COOLING SYSTEM ROUTING 3.7L ENGINE 1
DESCRIPTION - HOSE CLAMPS 3
OPERATION
OPERATION - COOLING SYSTEM 3
OPERATION - HOSE CLAMPS 3
DIAGNOSIS AND TESTING
DIAGNOSIS AND TESTING - ON-BOARD DIAGNOSTICS (OBD) 3
PRELIMINARY CHECKS 3
COOLING SYSTEM LEAKS 4
COOLING SYSTEM DIAGNOSIS CHART - GAS ENGINE 6
COOLING SYSTEM AERATION 12
STANDARD PROCEDURE
DRAINING COOLING SYSTEM 12
REFILLING COOLING SYSTEM 13
COOLING SYSTEM - REVERSE FLUSHING . 13
INSPECTION 14
SPECIFICATIONS
FILL VOLUMES 14
TORQUE 14
SPECIAL TOOLS
COOLING 15
ACCESSORY DRIVE 16
ENGINE 22
TRANSMISSION 45

COOLING

DESCRIPTION

2.4L ENGINE

The cooling system consists of the following items:

- Electric cooling fan - Standard.
- Radiator
- Hot bottle pressure cap
- Thermostat
- Coolant reserve/overflow system
- Radiator in-tank transmission oil cooler (if equipped with an automatic transmission)
- Coolant
- Water pump
- Hoses and hose clamps

3.7L ENGINE

The cooling system consists of the following items:

- 2 Speed electric cooling fan - Standard.
- 2 Speed electric cooling fan and mechanical engine fan with viscous clutch - Heavy duty cooling only
- Radiator
- Thermostat
- Combined coolant pressure bottle/overflow system with pressure cap
- Combination A/C/transmission oil cooler (if equipped with an automatic transmission)
- Coolant
- Water pump
- Hoses and hose clamps

DESCRIPTION - COOLING SYSTEM ROUTING 3.7L ENGINE

For cooling system routing refer to (Fig. 1).

COOLING (Continued)

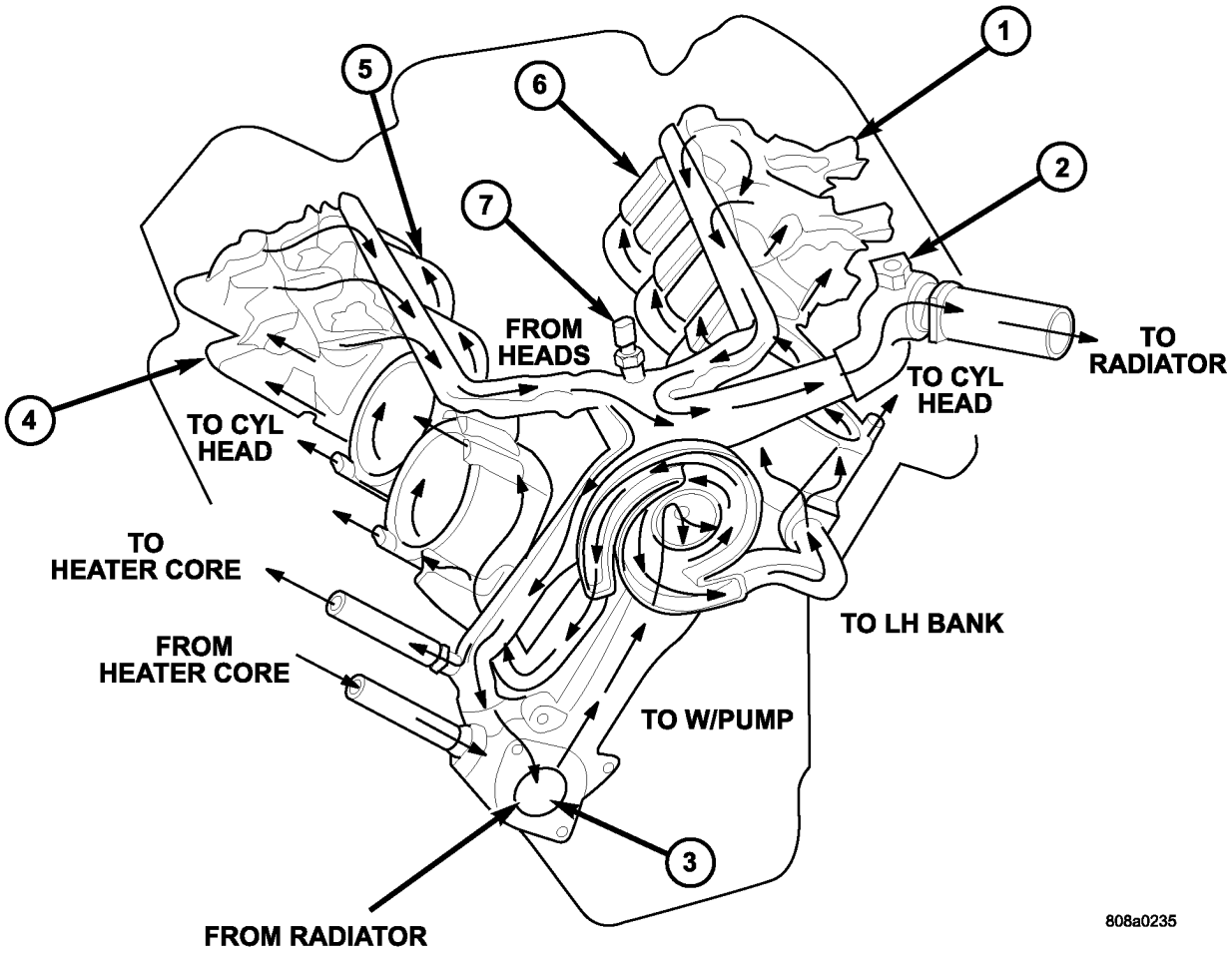

Fig. 1 Engine Cooling System 3.7L Engine

1 - LH CYL. HEAD
2 - AIR BLEED
3 - THERMOSTAT LOCATION
4 - RH CYL. HEAD
5 - RH BANK CYL. BLOCK
6 - LH BANK CYL. BLOCK
7 - COOLANT TEMP. SENSOR

COOLING (Continued)

DESCRIPTION - HOSE CLAMPS

The cooling system utilizes spring type hose clamps. If a spring type clamp replacement is necessary, replace with the original Mopar® equipment spring type clamp.

WARNING: CONSTANT TENSION HOSE CLAMPS ARE USED ON MOST COOLING SYSTEM HOSES. WHEN REMOVING OR INSTALLING, USE ONLY TOOLS DESIGNED FOR SERVICING THIS TYPE OF CLAMP, SUCH AS SPECIAL CLAMP TOOL NUMBER 6094. (Fig. 2). ALWAYS WEAR SAFETY GLASSES WHEN SERVICING CONSTANT TENSION CLAMPS.

CAUTION: A number or letter is stamped into the tongue of constant tension clamps. If replacement is necessary, use only a original equipment clamp with matching number or letter (Fig. 2).

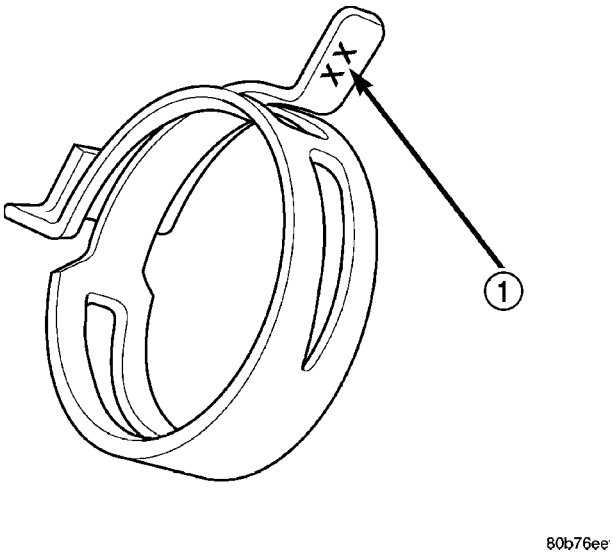

Fig. 2 Spring Clamp Size Location

1 - SPRING CLAMP SIZE LOCATION

OPERATION

OPERATION - COOLING SYSTEM

The cooling system regulates engine operating temperature. It allows the engine to reach normal operating temperature as quickly as possible. It also maintains normal operating temperature and prevents overheating.

The cooling system also provides a means of heating the passenger compartment. The cooling system is pressurized and uses a centrifugal water pump to circulate coolant throughout the system.

OPERATION - HOSE CLAMPS

The spring type hose clamp applies constant tension on a hose connection. To remove a spring type hose clamp, only use constant tension clamp pliers designed to compress the hose clamp.

DIAGNOSIS AND TESTING

DIAGNOSIS AND TESTING - ON-BOARD DIAGNOSTICS (OBD)

COOLING SYSTEM RELATED DIAGNOSTICS

The powertrain control module (PCM) has been programmed to monitor certain cooling system components:

- If the engine has remained cool for too long a period, such as with a stuck open thermostat, a Diagnostic Trouble Code (DTC) can be set.
- If an open or shorted condition has developed in the relay circuit controlling the electric radiator fan, a Diagnostic Trouble Code (DTC) can be set.

If the problem is sensed in a monitored circuit often enough to indicated an actual problem, a DTC is stored. The DTC will be stored in the PCM memory for eventual display to the service technician. (Refer to 25 - EMISSIONS CONTROL - DESCRIPTION).

ACCESSING DIAGNOSTIC TROUBLE CODES

To read DTC's and to obtain cooling system data, (Refer to 25 - EMISSIONS CONTROL - DESCRIPTION).

ERASING TROUBLE CODES

After the problem has been repaired, use the DRB scan tool to erase a DTC. Refer to the appropriate Powertrain Diagnostic Procedures service information for operation of the DRB scan tool.

PRELIMINARY CHECKS

ENGINE COOLING SYSTEM OVERHEATING

Establish what driving conditions caused the complaint. Abnormal loads on the cooling system such as the following may be the cause:

- PROLONGED IDLE
- VERY HIGH AMBIENT TEMPERATURE
- SLIGHT TAIL WIND AT IDLE
- SLOW TRAFFIC
- TRAFFIC JAMS
- HIGH SPEED
- STEEP GRADES

Driving techniques that avoid overheating are:

- Idle with A/C off when temperature gauge is at end of normal range.

(1) TRAILER TOWING:

Consult Trailer Towing section of owners manual. Do not exceed limits.

COOLING (Continued)

(2) RECENT SERVICE OR ACCIDENT REPAIR:

Determine if any recent service has been performed on vehicle that may effect cooling system. This may be:

- Engine adjustments (incorrect timing)
- Slipping engine accessory drive belt(s)
- Brakes (possibly dragging)
- Changed parts. Incorrect water pump, or pump rotating in wrong direction due to belt not correctly routed
- Reconditioned radiator or cooling system refilling (possibly under filled or air trapped in system).

NOTE: If investigation reveals none of the previous items as a cause for an engine overheating complaint, refer to following Cooling System Diagnosis charts.

These charts are to be used as a quick-reference only. Refer to the group text for information.

COOLING SYSTEM LEAKS

ULTRAVIOLET LIGHT METHOD

A leak detection additive is available through the parts department that can be added to cooling system. The additive is highly visible under ultraviolet light (black light). Pour one ounce of additive into cooling system. Place heater control unit in HEAT position. Start and operate engine until radiator upper hose is warm to touch. Aim the commercially available black light tool at components to be checked. If leaks are present, black light will cause additive to glow a bright green color.

The black light can be used in conjunction with a pressure tester to determine if any external leaks exist (Fig. 3).

PRESSURE TESTER METHOD

The engine should be at normal operating temperature. Recheck the system cold if cause of coolant loss is not located during the warm engine examination.

WARNING: HOT, PRESSURIZED COOLANT CAN CAUSE INJURY BY SCALDING.

Carefully remove radiator pressure cap from pressure bottle and check coolant level. Push down on cap to disengage it from stop tabs. Wipe inside of filler neck and examine lower inside sealing seat for nicks, cracks, paint, and dirt. Inspect radiator-to-reserve/overflow tank hose for internal obstructions. Insert a wire through the hose to be sure it is not obstructed.

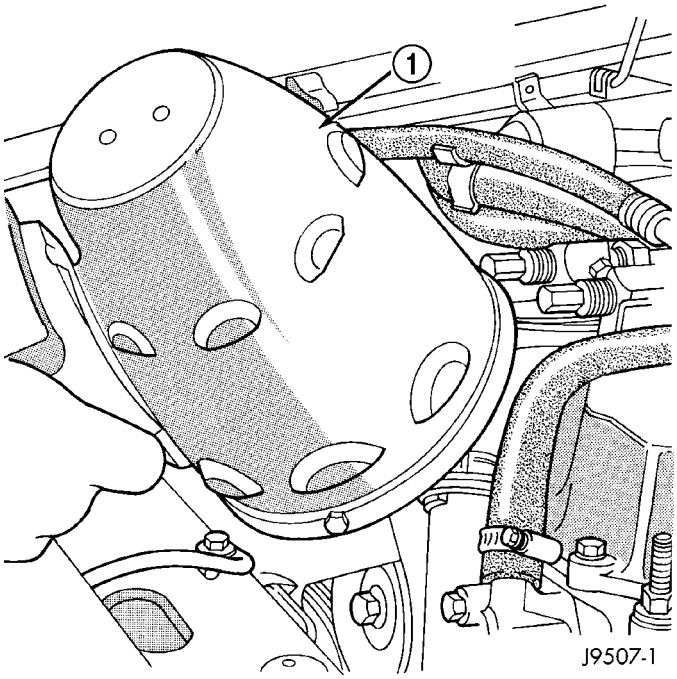

Fig. 3 Leak Detection Using Black Light - Typical

1 - TYPICAL BLACK LIGHT TOOL

Inspect cams on outside of filler neck. If cams are damaged, seating of pressure cap valve and tester seal will be affected.

Attach pressure tester (7700 or an equivalent) to radiator filler neck (Fig. 4).

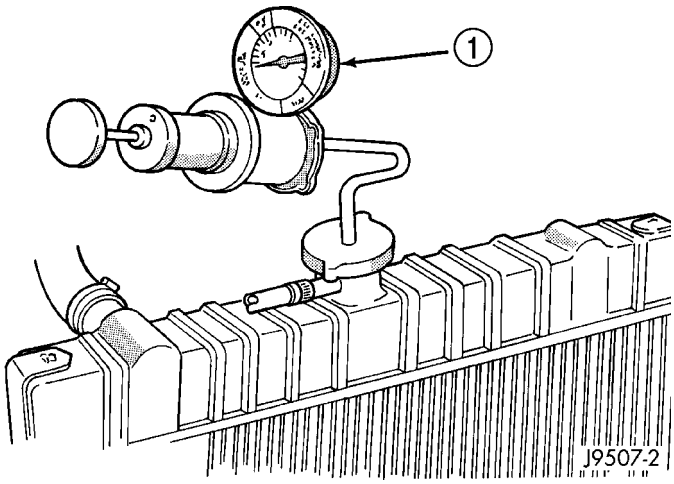

Fig. 4 Pressure Testing Cooling System - Typical

1 - TYPICAL COOLING SYSTEM PRESSURE TESTER

Operate tester pump to apply 110 kPa (16 psi) pressure to system. If hoses enlarge excessively or bulges while testing, replace as necessary. Observe gauge pointer and determine condition of cooling system according to following criteria:

Holds Steady: If pointer remains steady for two minutes, serious coolant leaks are not present in sys-

COOLING (Continued)

tem. However, there could be an internal leak that does not appear with normal system test pressure. If it is certain that coolant is being lost and leaks cannot be detected, inspect for interior leakage or perform Internal Leakage Test.

Drops Slowly: Indicates a small leak or seepage is occurring. Examine all connections for seepage or slight leakage with a flashlight. Inspect radiator, hoses, gasket edges and heater. Seal small leak holes with a Sealer Lubricant (or equivalent). Repair leak holes and inspect system again with pressure applied.

Drops Quickly: Indicates that serious leakage is occurring. Examine system for external leakage. If leaks are not visible, inspect for internal leakage. Large radiator leak holes should be repaired by a reputable radiator repair shop.

INTERNAL LEAKAGE INSPECTION

Remove engine oil pan drain plug and drain a small amount of engine oil. If coolant is present in the pan, it will drain first because it is heavier than oil. An alternative method is to operate engine for a short period to churn the oil. After this is done, remove engine dipstick and inspect for water globules. Also inspect transmission dipstick for water globules and transmission fluid cooler for leakage.

WARNING: WITH RADIATOR PRESSURE TESTER TOOL INSTALLED ON RADIATOR, DO NOT ALLOW PRESSURE TO EXCEED 124 KPA (18 PSI). PRESSURE WILL BUILD UP QUICKLY IF A COMBUSTION LEAK IS PRESENT. TO RELEASE PRESSURE, ROCK TESTER FROM SIDE TO SIDE. WHEN REMOVING TESTER, DO NOT TURN TESTER MORE THAN 1/2 TURN IF SYSTEM IS UNDER PRESSURE.

Operate engine without pressure cap on radiator until thermostat opens. Attach a Pressure Tester to filler neck. If pressure builds up quickly it indicates a combustion leak exists. This is usually the result of a cylinder head gasket leak or crack in engine. Repair as necessary.

If there is not an immediate pressure increase, pump the Pressure Tester. Do this until indicated pressure is within system range of 110 kPa (16 psi). Fluctuation of gauge pointer indicates compression or combustion leakage into cooling system.

Because the vehicle is equipped with a catalytic converter, **do not** remove spark plug cables or short out cylinders to isolate compression leak.

If the needle on dial of pressure tester does not fluctuate, race engine a few times to check for an abnormal amount of coolant or steam. This would be emitting from exhaust pipe. Coolant or steam from exhaust pipe may indicate a faulty cylinder head gasket, cracked engine cylinder block or cylinder head.

A convenient check for exhaust gas leakage into cooling system is provided by a commercially available Block Leak Check tool. Follow manufacturers instructions when using this product.

COMBUSTION LEAKAGE TEST - WITHOUT PRESSURE TESTER

DO NOT WASTE reusable coolant. If solution is clean, drain coolant into a clean container for reuse.

WARNING: DO NOT REMOVE CYLINDER BLOCK DRAIN PLUGS OR LOOSEN RADIATOR DRAINCOCK WITH SYSTEM HOT AND UNDER PRESSURE. SERIOUS BURNS FROM COOLANT CAN OCCUR.

Drain sufficient coolant to allow thermostat removal. (Refer to 7 - COOLING/ENGINE/ENGINE COOLANT THERMOSTAT - REMOVAL). Remove accessory drive belt (Refer to 7 - COOLING/ACCESSORY DRIVE/DRIVE BELTS - REMOVAL).

Add coolant to radiator to bring level to within 6.3 mm (1/4 in) of top of thermostat housing.

CAUTION: Avoid overheating. Do not operate engine for an excessive period of time. Open draincock immediately after test to eliminate boil over.

Start engine and accelerate rapidly three times, to approximately 3000 rpm while observing coolant. If internal engine combustion gases are leaking into cooling system, bubbles will appear in coolant. If bubbles do not appear, internal combustion gas leakage is not present.

COOLING (Continued)

COOLING SYSTEM DIAGNOSIS CHART - GAS ENGINE

COOLING SYSTEM DIAGNOSIS CHART

CONDITION	POSSIBLE CAUSES	CORRECTION
TEMPERATURE GAUGE READS LOW	1. Has a Diagnostic Trouble Code (DTC) been set indicating a stuck open thermostat?	1. Refer to (Refer to 25 - EMISSIONS CONTROL - DESCRIPTION) for On-Board Diagnostics and DTC information. Replace thermostat if necessary.
	2. Is the temperature sending unit connected?	2. Check the temperature sensor connector. (Refer to 7 - COOLING/ENGINE/ENGINE COOLANT TEMP SENSOR - DESCRIPTION). Repair connector if necessary.
	3. Is the temperature gauge operating OK?	3. Check gauge operation. Repair as necessary.
	4. Coolant level low in cold ambient temperatures accompanied with poor heater performance.	4. Check coolant level in the coolant pressure botttle and the radiator. Inspect system for leaks. Repair leaks as necessary.
	5. Improper operation of internal heater doors or heater controls.	5. Inspect heater and repair as necessary. (Refer to 24 - HEATING & AIR CONDITIONING - DIAGNOSIS AND TESTING)
	6. Electric fan functioning when not required.	6. Inspect electric fan for proper operation. Refer to Electric Cooling Fan in this section. Refer to group 8W for electric cooling fan and relay circuit schematic data.

COOLING (Continued)

CONDITION	POSSIBLE CAUSES	CORRECTION
TEMPERATURE GAUGE READS HIGH OR THE COOLANT WARNING LAMP ILLUMINATES. COOLANT MAY OR MAY NOT BE LOST OR LEAKING FROM THE COOLING SYSTEM.	1. Trailer is being towed, a steep hill is being climbed, vehicle is operated in slow moving traffic, or engine is being idled with very high ambient (outside) temperatures and the air conditioning is on. Higher altitudes could aggravate these conditions.	1. This may be a temporary condition and repair is not necessary. Turn off the air conditioning and attempt to drive the vehicle without any of the previous conditions. Observe the temperature gauge. The gauge should return to the normal range. If the gauge does not return to the normal range, determine the cause for overheating and repair.
	2. Is the temperature gauge reading correctly?	2. Check gauge. (Refer to Group 8J - INSTRUMENT CLUSTER). Repair as necessary.
	3. Is the temperature warning illuminating unnecessarily?	3. Check warning lamp operation. (Refer to Group 8J - INSTRUMENT CLUSTER).Repair as necessary.
	4. Coolant low in coolant pressure bottle and radiator?	4. Check for coolant leaks and repair as necessary. (Refer to 7 - COOLING - DIAGNOSIS AND TESTING).
	5. Pressure cap not installed tightly. If cap is loose, boiling point of coolant will be lowered. Also refer to the following Step 6.	5. Tighten cap
	6. Poor seals at the radiator cap.	6. (a) Check condition of cap and cap seals. (Refer to 7 - COOLING/ENGINE/RADIATOR PRESSURE CAP - DIAGNOSIS AND TESTING). (b) Check condition of radiator filler neck. If neck is bent or damaged, replace radiator.
	7. Coolant not flowing through system.	7. (a) Check condition of pressure bottle cap and cap seals. (Refer to 7 - COOLING/ENGINE/RADIATOR PRESSURE CAP - DIAGNOSIS AND TESTING). (b) Check condition of radiator vent nipple. If neck is damaged, replace radiator. (c) Check condition of the hose from the radiator to the coolant tank. It should fit tight at both ends without any kinks or tears. Replace hose if necessary. (d) Check pressure bottle/overflow tank and tanks hoses for blockage. Repair as necessary.

COOLING (Continued)

CONDITION	POSSIBLE CAUSES	CORRECTION
	8. Incorrect coolant concentration	8. Check coolant. (Refer to 7 - COOLING/ENGINE/COOLANT - DESCRIPTION) for correct coolant/ water mixture ratio.
	9. Fan installed backwards on viscous drive.	9. Mount fan on drive correctly.
	10. Radiator or A/C condenser fins are dirty or clogged.	10. Remove insects and debris. (Refer to 7 - COOLING/ENGINE/ RADIATOR - CLEANING).
	11. Radiator core is corroded or plugged.	11. Have radiator re-cored or replaced.
	12. Fuel or ignition system problems.	12. Refer to FUEL and /or IGNITION CONTROL for diagnosis.
	13. Dragging brakes.	13. Check and correct as necessary. (Refer to 5 - BRAKES - DIAGNOSIS AND TESTING) for correct procedures.
	14. Bug screen or cardboard is being used, reducing airflow.	14. Remove bug screen or cardboard.
	15. Thermostat partially or completely shut.	15. Check thermostat operation and replaces necessary. (Refer to 7 - COOLING/ENGINE/ENGINE COOLANT THERMOSTAT - DIAGNOSIS AND TESTING).
	16. Viscous fan drive not operating properly.	16. Check fan drive operation and replace as necessary. (Refer to 7 - COOLING/ENGINE/FAN DRIVE VISCOUS CLUTCH - DIAGNOSIS AND TESTING).
	17. Cylinder head gasket leaking.	17. Check for cylinder head gasket leaks. (Refer to 7 - COOLING - DIAGNOSIS AND TESTING). For repair, (Refer to 9 - ENGINE/CYLINDER HEAD - REMOVAL).
	18. Heater core leaking.	18. Check heater core for leaks. (Refer to 24 - HEATING & AIR CONDITIONING/PLUMBING/ HEATER CORE - REMOVAL). Repair as necessary.
	19. Electric fan not functioning.	19. Inspect electric fan for proper operation. Refer to Electric Cooling Fan in this section. Refer to Group 8W for electric cooling fan and relay circuit schematic data.

COOLING (Continued)

CONDITION	POSSIBLE CAUSES	CORRECTION
TEMPERATURE GAUGE READING IS INCONSISTENT (FLUCTUATES, CYCLES OR IS ERRATIC)	1. During cold weather operation, with the heater blower in the high position, the gauge reading may drop slightly.	1. A normal condition. No correction is necessary.
	2. Temperature gauge or engine mounted gauge sensor defective or shorted. Also, corroded or loose wiring in this circuit.	2. Check operation of gauge and repair if necessary. Refer to Group 8J, Instrument cluster.
	3. Gauge reading rises when vehicle is brought to a stop after heavy use (engine still running)	3. A normal condition. No correction is necessary. Gauge should return to normal range after vehicle is driven.
	4. Gauge reading high after restarting a warmed up (hot) engine.	4. A normal condition. No correction is necessary. The gauge should return to normal range after a few minutes of engine operation.
	5. Coolant level low in cooling system (air will build up in the cooling system causing the thermostat to open late).	5. Check and correct coolant leaks. (Refer to 7 - COOLING - DIAGNOSIS AND TESTING).
	6. Cylinder head gasket leaking allowing exhaust gas to enter cooling system causing a thermostat to open late.	6. (a) Check for cylinder head gasket leaks. (Refer to 7 - COOLING - DIAGNOSIS AND TESTING). (b) Check for coolant in the engine oil. Inspect for white steam emitting from the exhaust system. Repair as necessary.
	7. Water pump impeller loose on shaft.	7. Check water pump and replace as necessary. (Refer to 7 - COOLING/ENGINE/WATER PUMP - DIAGNOSIS AND TESTING).
	8. Loose accessory drive belt. (water pump slipping)	8. (Refer to 7 - COOLING/ACCESSORY DRIVE/DRIVE BELTS - DIAGNOSIS AND TESTING). Check and correct as necessary.
	9. Air leak on the suction side of the water pump allows air to build up in cooling system causing thermostat to open late.	9. Locate leak and repair as necessary.
PRESSURE CAP IS BLOWING OFF STEAM AND/OR COOLANT TO COOLANT TANK. TEMPERATURE GAUGE READING MAY BE ABOVE NORMAL BUT NOT HIGH. COOLANT LEVEL MAY BE HIGH IN COOLANT RESERVE/OVERFLOW TANK	1. Pressure relief valve in pressure bottle cap is defective.	1. Check condition of radiator cap and cap seals. (Refer to 7 - COOLING/ENGINE/RADIATOR PRESSURE CAP - DIAGNOSIS AND TESTING). Replace cap as necessary.

COOLING (Continued)

CONDITION	POSSIBLE CAUSES	CORRECTION
COOLANT LOSS TO THE GROUND WITHOUT PRESSURE CAP BLOWOFF. GAUGE READING HIGH OR HOT	1. Coolant leaks in radiator, cooling system hoses, water pump or engine.	1. Pressure test and repair as necessary. (Refer to 7 - COOLING - DIAGNOSIS AND TESTING).
DETONATION OR PRE-IGNITION (NOT CAUSED BY IGNITION SYSTEM). GAUGE MAY OR MAY NOT BE READING HIGH	1. Engine overheating. 2. Freeze point of coolant not correct. Mixture is too rich or too lean.	1. Check reason for overheating and repair as necessary. 2. Check coolant concentration. (Refer to 7 - COOLING/ENGINE/ COOLANT - DESCRIPTION) and adjust ratio as required.
HOSE OR HOSES COLLAPSE WHILE ENGINE IS RUNNING	1. Vacuum created in cooling system on engine cool-down is not being relieved through coolant reserve/overflow system.	1. (a) Radiator cap relief valve stuck. (Refer to 7 - COOLING/ENGINE/RADIATOR PRESSURE CAP - DIAGNOSIS AND TESTING). Replace if necessary (b) Hose between coolant reserve/ overflow tank and radiator is kinked. Repair as necessary. (c) Vent at coolant reserve/overflow tank is plugged. Clean vent and repair as necessary. (d) Reserve/overflow tank is internally blocked or plugged. Check for blockage and repair as necessary.
NOISY VISCOUS FAN/DRIVE	1. Fan blades loose. 2. Fan blades striking a surrounding object. 3. Air obstructions at radiator or air conditioning condenser. 4. Thermal viscous fan drive has defective bearing.	1. Replace fan blade assembly. (Refer to 7 - COOLING/ENGINE/ RADIATOR FAN - REMOVAL) 2. Locate point of fan blade contact and repair as necessary. 3. Remove obstructions and/or clean debris or insects from radiator or A/C condenser. 4. Replace fan drive. Bearing is not serviceable. (Refer to 7 - COOLING/ENGINE/RADIATOR FAN - REMOVAL).

COOLING (Continued)

CONDITION	POSSIBLE CAUSES	CORRECTION
INADEQUATE HEATER PERFORMANCE. THERMOSTAT FAILED IN OPEN POSITION	1. Has a Diagnostic trouble Code (DTC) been set?	1. (Refer to 25 - EMISSIONS CONTROL - DESCRIPTION) for correct procedures and replace thermostat if necessary
	2. Coolant level low	2. (Refer to 7 - COOLING - DIAGNOSIS AND TESTING).
	3. Obstructions in heater hose/fittings	3. Remove heater hoses at both ends and check for obstructions
	4. Heater hose kinked	4. Locate kinked area and repair as necessary
	5. Water pump is not pumping water to/through the heater core. When the engine is fully warmed up, both heater hoses should be hot to the touch. If only one of the hoses is hot, the water pump may not be operating correctly or the heater core may be plugged. Accessory drive belt may be slipping causing poor water pump operation.	5. (Refer to 7 - COOLING/ENGINE/WATER PUMP - DIAGNOSIS AND TESTING). If a slipping belt is detected, (Refer to 7 - COOLING/ACCESSORY DRIVE/DRIVE BELTS - REMOVAL). If heater core obstruction is detected, (Refer to 7 - COOLING - STANDARD PROCEDURE) for cooling system reverse flushing.
STEAM IS COMING FROM THE FRONT OF VEHICLE NEAR THE GRILL AREA WHEN WEATHER IS WET, ENGINE IS WARMED UP AND RUNNING, AND VEHICLE IS STATIONARY. TEMPERATURE GAUGE IS IN NORMAL RANGE	1. During wet weather, moisture (snow, ice or rain condensation) on the radiator or condensor will evaporate when the thermostat opens. This opening allows heated water into the radiator. When the moisture contacts the hot radiator or condensor, steam may be emitted. This usually occurs in cold weather with no fan or airflow to blow it away.	1. Occasional steam emitting from this area is normal. No repair is necessary.
COOLANT COLOR	1. Coolant color is not necessarily an indication of adequate corrosion or temperature protection. Do not rely on coolant color for determining condition of coolant.	1. (Refer to 7 - COOLING/ENGINE/COOLANT - DESCRIPTION) for coolant concentration information. Adjust coolant mixture as necessary.
COOLANT LEVEL CHANGES IN COOLANT RESERVE/OVERFLOW TANK. TEMPERATURE GAUGE IS IN NORMAL RANGE	1. Level changes are to be expected as coolant volume fluctuates with engine temperature. If the level in the tank was between the FULL and ADD marks at normal operating temperature, the level should return to within that range after operation at elevated temperatures.	1. A normal condition. No repair is necessary.

COOLING (Continued)

CONDITION	POSSIBLE CAUSES	CORRECTION
FAN RUNS ALL THE TIME	1. Fan control sensors inoperative.	1. Check for DTC's. Verify sensor readings.
	2. Fan control solenoid stuck ″on″.	2. Check fan operation speeds. Refer to fan speed operation table.
	3. Fan control solenoid harness damaged.	3. Check for DTC 1499. Repair as required.
	4. Transmission temperature too high.	4. Check for transmission over temp. DTC.
	5. Engine coolant temperature too high.	5. (a) Check coolant level. Correct level as required.
		(b) Thermostat stuck. Replace thermostat.
		(c) Water pump failed. Replace water pump.
		(d) Coolant flow restricted. Clean radiator.
		(e) Air flow over radiator obstructed.Remove obstruction.

COOLING SYSTEM AERATION

Low coolant level in a cross flow radiator will equalize in both tanks with engine off. With engine running and at operating temperature, the high pressure inlet tank runs full and the low pressure outlet tank drops, resulting in cooling system aeration. Aeration will draw air into the water pump resulting in the following:

- High reading shown on the temperature gauge.
- Loss of coolant flow through the heater core.
- Corrosion in the cooling system.
- Water pump seal may run dry, increasing the risk of premature seal failure.
- Combustion gas leaks into the coolant can also cause aeration.

STANDARD PROCEDURE

DRAINING COOLING SYSTEM

WARNING: DO NOT REMOVE THE CYLINDER BLOCK DRAIN PLUGS (Fig. 5) OR LOOSEN THE RADIATOR DRAINCOCK WITH SYSTEM HOT AND UNDER PRESSURE. SERIOUS BURNS FROM COOLANT CAN OCCUR.

(1) DO NOT remove radiator cap first. With engine cold, raise vehicle on a hoist and locate radiator draincock.

NOTE: Radiator draincock is located on the left/ lower side of radiator facing to rear of vehicle.

(2) Attach one end of a hose to the draincock. Put the other end into a clean container. Open draincock and drain coolant from radiator. This will empty the coolant reserve/overflow tank. The coolant does not have to be removed from the tank unless the system is being refilled with a fresh mixture. When tank is empty, remove radiator cap and continue draining cooling system.

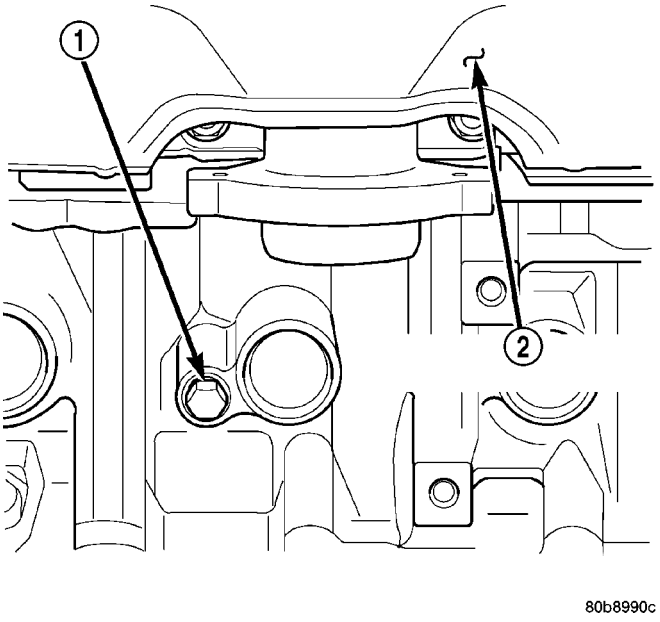

Fig. 5 Drain Plug - 3.7L Engine

1 - CYLINDER BLOCK DRAIN PLUG
2 - EXHAUST MANIFOLD AND HEAT SHIELD

COOLING (Continued)

REFILLING COOLING SYSTEM

(1) Tighten the radiator draincock and the cylinder block drain plug(s) (if removed).

CAUTION: Failure to purge air from the cooling system can result in an overheating condition and severe engine damage.

(2) Fill cooling system with the antifreeze mixture (Refer to LUBRICATION & MAINTENANCE/FLUID TYPES - DESCRIPTION). Fill pressure bottle to service line and install cap.

NOTE: The engine cooling system will push any remaining air into the coolant bottle within about an hour of normal driving. As a result, a drop in coolant level in the pressure bottle may occur. If the engine cooling system overheats and pushes coolant into the overflow side of the coolant bottle, this coolant will be sucked back into the cooling system ONLY IF THE PRESSURE CAP IS LEFT ON THE BOTTLE. Removing the pressure cap breaks the vacuum path between the two bottle sections and the coolant will not return to cooling system.

(3) With heater control unit in the HEAT position, operate engine with pressure bottle cap in place.

(4) Add coolant to pressure bottle as necessary. **Only add coolant to the pressure bottle when the engine is cold. Coolant level in a warm engine will be higher due to thermal expansion.**

NOTE: The coolant bottle has two chambers. Coolant will normally only be in the outboard (larger) of the two. The inboard chamber is only to recover coolant in the event of an overheat or after a recent service fill. The inboard chamber should normally be empty. If there is coolant in the overflow side of the coolant bottle (after several warm/cold cycles of the engine) and coolant level is above cold full when cold, disconnect the end of the overflow hose at the fill neck and lower it into a clean container. Allow coolant to drain into the container until emptied. Reconnect overflow hose to fill neck.

COOLING SYSTEM - REVERSE FLUSHING

CAUTION: The cooling system normally operates at 97-110 kPa (14-16 psi) pressure. Exceeding this pressure may damage the radiator or hoses.

Reverse flushing of the cooling system is the forcing of water through the cooling system. This is done using air pressure in the opposite direction of normal coolant flow. It is usually only necessary with very dirty systems with evidence of partial plugging.

CHEMICAL CLEANING

If visual inspection indicates the formation of sludge or scaly deposits, use a radiator cleaner (Mopar Radiator Kleen or equivalent) before flushing. This will soften scale and other deposits and aid the flushing operation.

CAUTION: Be sure instructions on the container are followed.

REVERSE FLUSHING RADIATOR

Disconnect the radiator hoses from the radiator fittings. Attach a section of radiator hose to the radiator bottom outlet fitting and insert the flushing gun. Connect a water supply hose and air supply hose to the flushing gun.

CAUTION: The cooling system normally operates at 97-110 kPa (14 -16 psi) pressure. Exceeding this pressure may damage the radiator or hoses.

Allow the radiator to fill with water. When radiator is filled, apply air in short blasts allowing radiator to refill between blasts. Continue this reverse flushing until clean water flows out through rear of radiator cooling tube passages. For more information, refer to operating instructions supplied with flushing equipment. Have radiator cleaned more extensively by a radiator repair shop.

REVERSE FLUSHING ENGINE

Drain the cooling system (Refer to 7 - COOLING - STANDARD PROCEDURE). Remove the thermostat housing and thermostat. Install the thermostat housing. Disconnect the radiator upper hose from the radiator and attach the flushing gun to the hose. Disconnect the radiator lower hose from the water pump. Attach a lead away hose to the water pump inlet fitting.

CAUTION: Be sure that the heater control valve is closed (heat off). This is done to prevent coolant flow with scale and other deposits from entering the heater core.

Connect the water supply hose and air supply hose to the flushing gun. Allow the engine to fill with water. When the engine is filled, apply air in short blasts, allowing the system to fill between air blasts. Continue until clean water flows through the lead away hose. For more information, refer to operating instructions supplied with flushing equipment.

Remove the lead away hose, flushing gun, water supply hose and air supply hose. Remove the thermostat housing (Refer to 7 - COOLING/ENGINE/ENGINE COOLANT THERMOSTAT - REMOVAL).

COOLING (Continued)

Install the thermostat and housing with a replacement gasket (Refer to 7 - COOLING/ENGINE/ENGINE COOLANT THERMOSTAT - INSTALLATION). Connect the radiator hoses. Refill the cooling system with the correct antifreeze/water mixture (Refer to 7 - COOLING - STANDARD PROCEDURE).

INSPECTION

After performing a cleaning/flush procedure, inspect all hoses, clamps and connections for deterioration and leaks. Inspect radiator and heater core for leaks.

SPECIFICATIONS

FILL VOLUMES

SPECIFICATIONS

DESCRIPTION	SPECIFICATION	
	Metric	Standard
2.4L	9.7 L	9.2 qts.
3.7L	12.8 L	11.8 qts.
2.8L DIESEL	12.5 L	11.8 qts

TORQUE

DESCRIPTION	N·m	Ft. Lbs.	In. Lbs.
Engine Air Tubes			
Turbocharger to Intercooler	4.7	-	42
Intercooler to Intake Manifold	4.7	-	42
Automatic Belt Tensioner to Mounting Bracket			
2.4L	41	30	-
3.7L	41	30	-
Automatic Belt Tensioner Pulley Bolt			
2.4L	61	45	-
3.7L	61	45	-
Accessory Drive Belt Idler Pulley Bolt - 2.8L Diesel	53	39	-
Accessory Drive Belt Tensioner Bolt - 2.8L Diesel	47.1	35	-
Viscous Fan Drive to Engine - 3.7L	95	70	-
Viscous Fan Drive to Engine - 2.8L Diesel	149	110	-
Cooling Fan Support Bolts	47.1	35	-
Block Heater Bolt			
2.4L	2	-	17
3.7L	2	-	17
Transmission Oil/Condenser to Radiator Bolts	11.9	-	105
Coolant Overflow Bottle to Plenum mounting bolts - 2.4L only	8.5	-	75
Coolant Pressure Bottle to Plenum mounting bolts -3.7L only	8.5	-	75
Electric Fan to Fan Shroud bolts	9	-	80
Fan Blade Assy. to Viscous Drive Bolts - 3.7L/2.8L HD Cooling	23.7	-	210
Fan Shroud to Radiator Mounting Bolts	9	-	80
Radiator Upper Isolator to Crossmember - Bolts	10.7	-	95
Thermostat Housing Bolts			
2.8L Diesel	27.5	21	-
2.4L	28	-	250
3.7L	13	-	115
Water Pump Bolts			
2.4L	12	-	105
3.7L	54	40	-
Water Pump Housing Nuts - 2.8L Diesel	24.4	18	-

COOLING (Continued)

SPECIAL TOOLS

COOLING

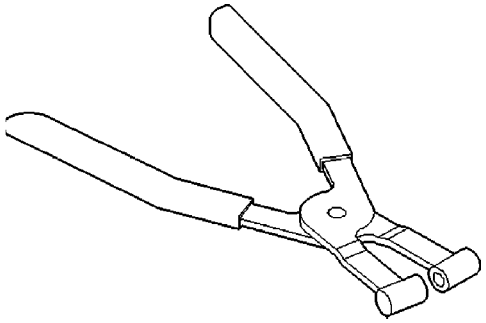

Pliers 6094

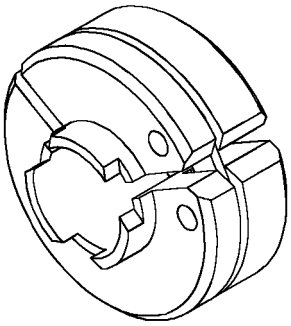

RELEASE TOOL 8875A

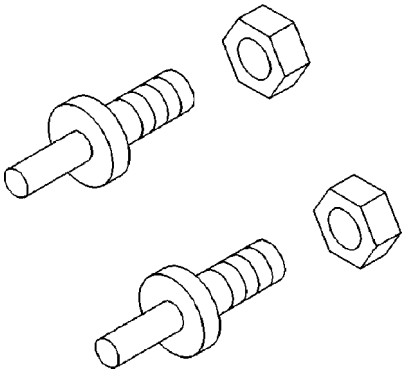

Adapter Pins 8346

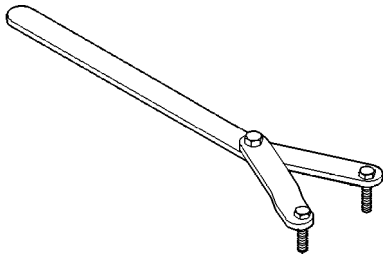

Spanner Wrench 6958 with 8346 adapter pins

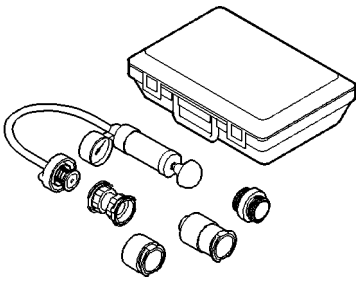

Pressure Tester 7700–A

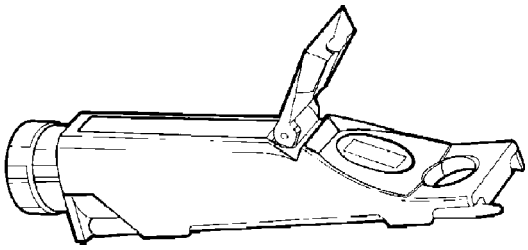

Coolant Refractometer 8286

ACCESSORY DRIVE

TABLE OF CONTENTS

	page
ACCESSORY DRIVE	
DIAGNOSIS AND TESTING - SERPENTINE DRIVE BELT DIAGNOSIS	16
BELT TENSIONERS	
DESCRIPTION	18
OPERATION	18
REMOVAL	
2.4L ENGINE	18
3.7L ENGINE	19
INSTALLATION	
2.4L ENGINE	19
3.7L ENGINE	19
DRIVE BELTS	
REMOVAL	
2.4L ENGINE	19
3.7L ENGINE	20
INSTALLATION	
2.4L ENGINE	20
3.7L ENGINE	21

ACCESSORY DRIVE

DIAGNOSIS AND TESTING - SERPENTINE DRIVE BELT DIAGNOSIS

When diagnosing serpentine drive belts, small cracks that run across ribbed surface of belt from rib to rib (Fig. 1), are considered normal. These are not a reason to replace belt. However, cracks running along a rib (not across) are **not** normal. Any belt with cracks running along a rib must be replaced (Fig. 1). Also replace belt if it has excessive wear, frayed cords or severe glazing.

Refer to SERPENTINE DRIVE BELT DIAGNOSIS CHART for further belt diagnosis.

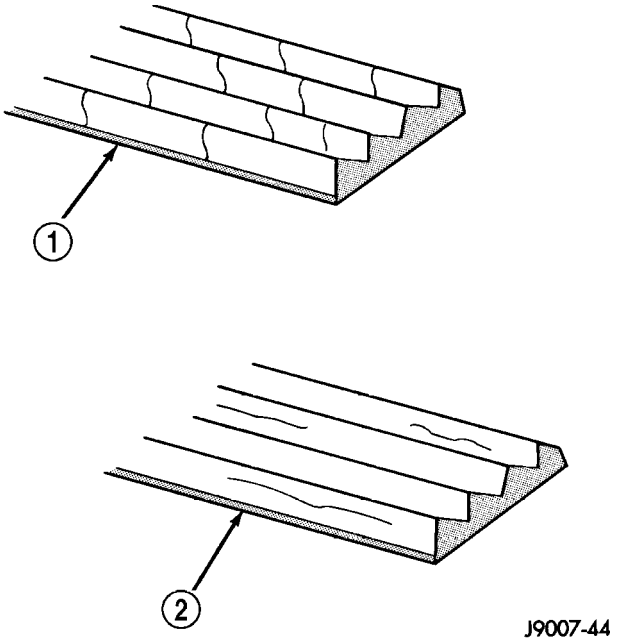

Fig. 1 Serpentine Accessory Drive Belt Wear Patterns

1 - NORMAL CRACKS BELT OK
2 - NOT NORMAL CRACKS REPLACE BELT

ACCESSORY DRIVE (Continued)

SERPENTINE DRIVE BELT DIAGNOSIS CHART

CONDITION	POSSIBLE CAUSES	CORRECTION
RIB CHUNKING (ONE OR MORE RIBS HAS SEPARATED FROM BELT BODY)	1. Foreign objects imbedded in pulley grooves.	1. Remove foreign objects from pulley grooves. Replace belt.
	2. Installation damage.	2. Replace belt.
RIB OR BELT WEAR	1. Pulley(s) misaligned.	1. Align pulley(s).
	2. Abrasive environment.	2. Clean pulley(s). Replace belt if necessary.
	3. Rusted pulley(s).	3. Clean rust from pulley(s).
	4. Sharp or jagged pulley groove tips.	4. Replace pulley.
	5. Rubber deteriorated.	5. Replace belt.
LONGITUDINAL BELT CRACKING (CRACKS BETWEEN TWO RIBS)	1. Belt has mistracked from pulley groove.	1. Replace belt.
	2. Pulley groove tip has worn away rubber to tensile member.	2. Replace belt.
BELT SLIPS	1. Belt slipping because of insufficient tension.	1. Replace automatic belt tensioner.
	2. Belt routed incorrectly	2. Verify belt routing.
	3. Incorrect belt.	3. Replace belt.
	4. Belt or pulley subjected to substance (belt dressing, oil ethylene glycol) that has reduced friction.	4. Replace belt and clean pulleys.
	5. Driven component bearing failure.	5. Replace faulty component bearing.
	6. Belt glazed and hardened from heat and excessive slippage.	6. Replace belt.
“GROOVE JUMPING” (BELT DOES NOT MAINTAIN CORRECT POSITION ON PULLEY)	1. Belt tension either too high or too low.	1. Replace automatic belt tensioner.
	2. Belt routed incorrectly.	2. Verify belt routing.
	3. Incorrect belt.	3. Replace belt.
	4. Pulley(s) not within design tolerance.	4. Replace pulley(s).
	5. Foreign object(s) in grooves.	5. Remove foreign objects from grooves.
	6. Pulley misalignment.	6. Check and replace.
	7. Belt cord line is broken.	7. Replace belt.

ACCESSORY DRIVE (Continued)

CONDITION	POSSIBLE CAUSES	CORRECTION
BELT BROKEN (NOTE: IDENTIFY AND CORRECT PROBLEM BEFORE NEW BELT IS INSTALLED)	1. Excessive tension.	1. Replace belt and automatic belt tensioner.
	2. Incorrect belt.	2. Replace belt.
	3. Tensile member damaged during belt installation.	3. Replace belt.
	4. Severe misalignment.	4. Check and replace.
	5. Bracket, pulley, or bearing failure.	5. Replace defective component and belt.
NOISE (OBJECTIONABLE SQUEAL, SQUEAK, OR RUMBLE IS HEARD OR FELT WHILE DRIVE BELT IS IN OPERATION)	1. Belt slippage.	1. Replace belt or automatic belt tensioner.
	2. Bearing noise.	2. Locate and repair.
	3. Belt misalignment.	3. Replace belt.
	4. Belt-to-pulley mismatch.	4. Install correct belt.

BELT TENSIONERS

DESCRIPTION

The automatic belt tensioner is a spring loaded arm and pulley assembly. The tensioner assembly is designed to apply constant pressure on the accessory drive belt to maintain proper belt tension.

OPERATION

WARNING: THE AUTOMATIC BELT TENSIONER ASSEMBLY IS SPRING LOADED. DO NOT ATTEMPT TO DISASSEMBLE THE TENSIONER ASSEMBLY.

The automatic belt tensioner maintains correct belt tension using a coiled spring within the tensioner housing. The spring applies pressure to the tensioner arm pressing the arm into the belt, tensioning the belt.

If a new belt is being installed, the arrow must be within approximately 3 mm (1/8 in.) of indexing mark. Belt is considered new if it has been used 15 minutes or less. If this specification cannot be met, check for:

- The wrong belt being installed (incorrect length/width)
- Worn bearings on an engine accessory (A/C compressor, power steering pump, water pump, idler pulley or generator)
- A pulley on an engine accessory being loose
- Misalignment of an engine accessory
- Belt incorrectly routed.

REMOVAL

2.4L ENGINE

(1) Remove accessory drive belt (Refer to 7 - COOLING/ACCESSORY DRIVE/DRIVE BELTS - REMOVAL).

(2) Remove tensioner assembly from engine accessory drive bracket (Fig. 2).

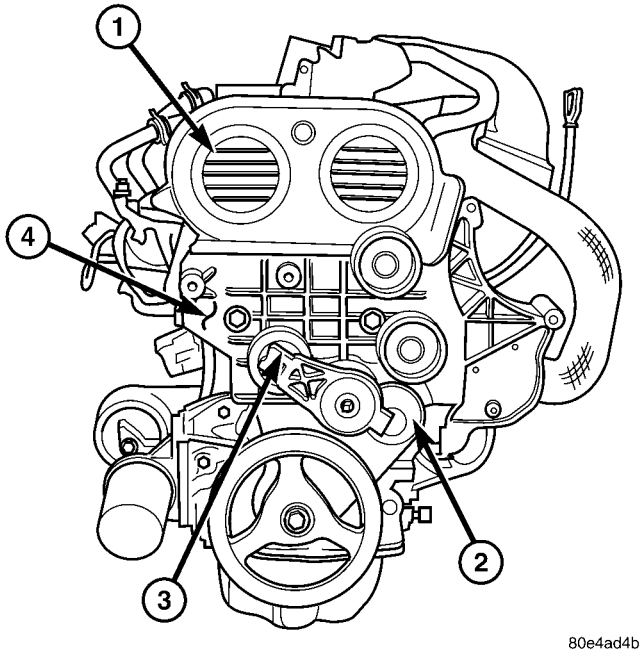

Fig. 2 Accessory Drive Bracket

1- UPPER TIMING BELT COVER
2- LOWER TIMING BELT COVER
3- BELT TENSIONER
4- ACCESSORY DRIVE BRACKET

BELT TENSIONERS (Continued)

WARNING: BECAUSE OF HIGH SPRING TENSION, DO NOT ATTEMPT TO DISASSEMBLE AUTOMATIC TENSIONER. UNIT IS SERVICED AS AN ASSEMBLY (EXCEPT FOR PULLEY ON TENSIONER).

(3) Remove pulley bolt. Remove pulley from tensioner.

3.7L ENGINE

(1) Remove accessory drive belt (Refer to 7 - COOLING/ACCESSORY DRIVE/DRIVE BELTS - REMOVAL).

(2) Remove tensioner assembly from engine front cover (Fig. 3).

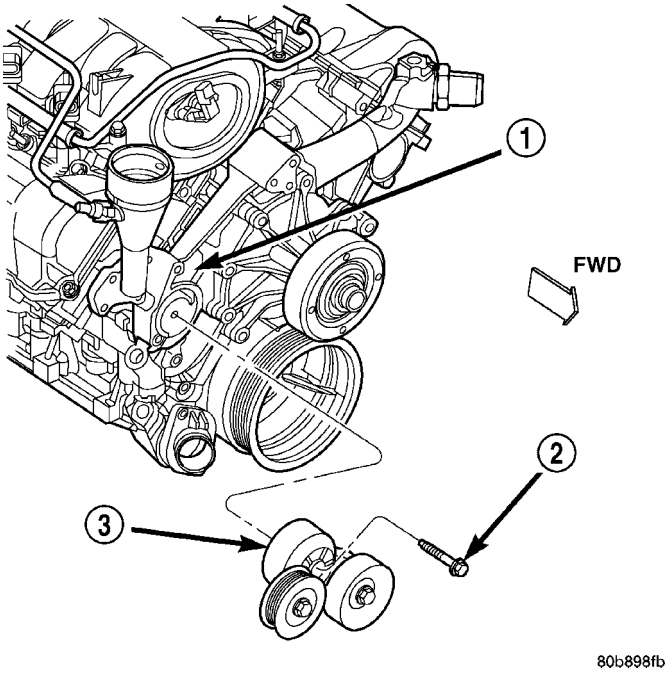

Fig. 3 Automatic Belt Tensioner

1 - TIMING CHAIN COVER
2 - BOLT TORQUE TO 41 N·m (30 FT LBS)
3 - AUTOMATIC BELT TENSIONER

WARNING: BECAUSE OF HIGH SPRING TENSION, DO NOT ATTEMPT TO DISASSEMBLE AUTOMATIC TENSIONER. UNIT IS SERVICED AS AN ASSEMBLY (EXCEPT FOR PULLEY ON TENSIONER).

(3) Remove pulley bolt. Remove pulley from tensioner.

INSTALLATION

2.4L ENGINE

(1) Install pulley and pulley bolt to tensioner. Tighten bolt to 61 N·m (45 ft. lbs.) torque.

(2) An indexing slot is located on back of tensioner. Align this slot to the head of the nut on the front cover. Install the mounting nut on the stud. Tighten stud to 41 N·m (30 ft. lbs.).

(3) Install drive belt (Refer to 7 - COOLING/ACCESSORY DRIVE/DRIVE BELTS - INSTALLATION).

(4) Check belt indexing marks (Refer to 7 - COOLING/ACCESSORY DRIVE/DRIVE BELTS - INSTALLATION).

3.7L ENGINE

(1) Install pulley and pulley bolt to tensioner. Tighten bolt to 61 N·m (45 ft. lbs.) torque.

(2) An indexing slot is located on back of tensioner. Align this slot to the head of the bolt on the front cover. Install the mounting bolt. Tighten bolt to 41 N·m (30 ft. lbs.).

(3) Install drive belt (Refer to 7 - COOLING/ACCESSORY DRIVE/DRIVE BELTS - INSTALLATION).

(4) Check belt indexing marks (Refer to 7 - COOLING/ACCESSORY DRIVE/DRIVE BELTS - INSTALLATION).

DRIVE BELTS

REMOVAL

2.4L ENGINE

NOTE: The belt routing schematics are published from the latest information available at the time of publication. If anything differs between these schematics and the Belt Routing Label, use the schematics on Belt Routing Label. This label is located in the engine compartment.

CAUTION: DO NOT LET TENSIONER ARM SNAP BACK TO THE FREEARM POSITION, SEVERE DAMAGE MAY OCCUR TO THE TENSIONER.

Belt tension is not adjustable. Belt adjustment is maintained by an automatic (spring load) belt tensioner.

(1) Disconnect negative battery cable from battery.

(2) Rotate belt tensioner until it contacts its stop. Remove belt, then slowly rotate the tensioner into the freearm position.

DRIVE BELTS (Continued)

3.7L ENGINE

NOTE: The belt routing schematics are published from the latest information available at the time of publication. If anything differs between these schematics and the Belt Routing Label, use the schematics on Belt Routing Label. This label is located in the engine compartment.

CAUTION: DO NOT LET TENSIONER ARM SNAP BACK TO THE FREEARM POSITION, SEVERE DAMAGE MAY OCCUR TO THE TENSIONER.

Belt tension is not adjustable. Belt adjustment is maintained by an automatic (spring load) belt tensioner.

(1) Disconnect negative battery cable from battery.

(2) Rotate belt tensioner until it contacts its stop. Remove belt, then slowly rotate the tensioner into the freearm position. (Fig. 4).

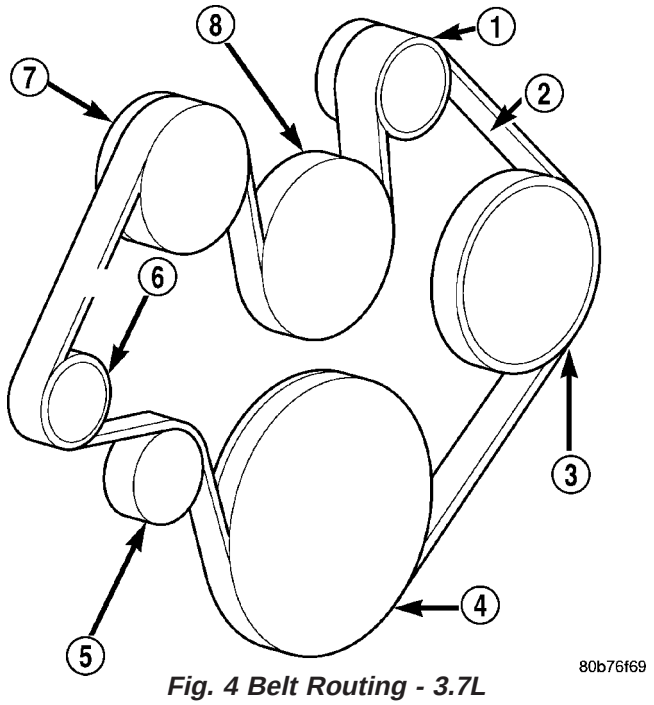

Fig. 4 Belt Routing - 3.7L

1 - GENERATOR PULLEY
2 - ACCESSORY DRIVE BELT
3 - POWER STEERING PUMP PULLEY
4 - CRANKSHAFT PULLEY
5 - IDLER PULLEY
6 - TENSIONER
7 - A/C COMPRESSOR PULLEY
8 - WATER PUMP PULLEY

INSTALLATION

2.4L ENGINE

NOTE: The belt routing schematics are published from the latest information available at the time of publication. If anything differs between these schematics and the Belt Routing Label, use the schematics on Belt Routing Label. This label is located in the engine compartment.

Belt tension is not adjustable. Belt adjustment is maintained by an automatic (spring load) belt tensioner.

(1) Check condition of all pulleys.

CAUTION: When installing the serpentine accessory drive belt, the belt MUST be routed correctly. If not, the engine may overheat due to the water pump rotating in the wrong direction.

(2) Install new belt (Fig. 5) or (Fig. 6). Route the belt around all pulleys except the idler pulley. Rotate the tensioner arm until it contacts its stop position. Route the belt around the idler and slowly let the tensioner rotate into the belt. Make sure the belt is seated onto all pulleys.

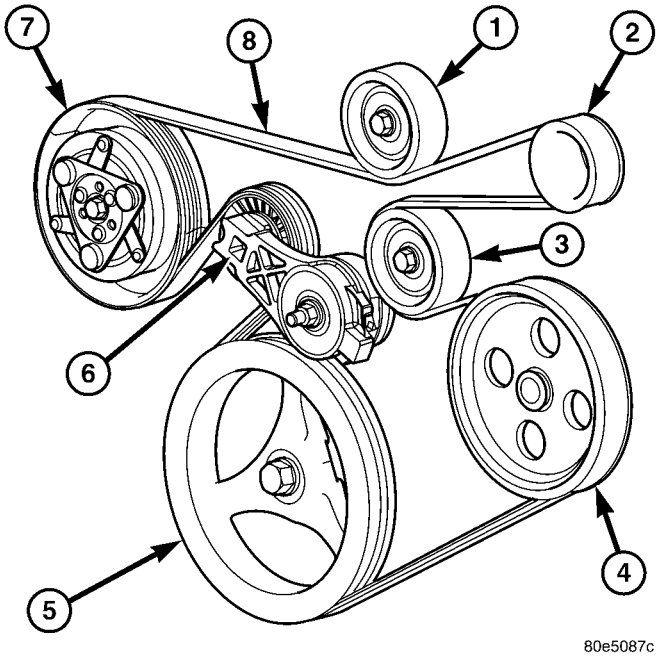

Fig. 5 Belt Routing 2.4L With A/C

1 - IDLER PULLEY
2 - GENERATOR PULLEY
3 - IDLER PULLEY
4 - POWER STEERING PUMP PULLEY
5 -CRANKSHAFT PULLEY
6 - TENSIONER
7 - A/C COMPRESSOR PULLEY
8 - ACCESSORY DRIVE BELT

DRIVE BELTS (Continued)

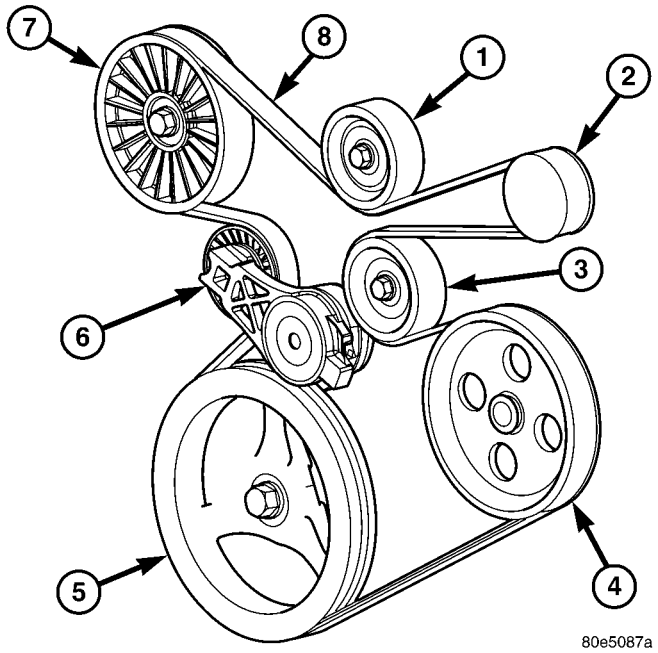

Fig. 6 Belt Routing 2.4L Without A/C

1 - IDLER PULLEY
2 - GENERATOR PULLEY
3 - IDLER PULLEY
4 - POWER STEERING PUMP PULLEY
5 -CRANKSHAFT PULLEY
6 - TENSIONER
7 - NON A/C IDLER PULLEY
8 - ACCESSORY DRIVE BELT

(3) With the drive belt installed, inspect the belt wear indicator. On 2.4L Engines the gap between the tang and the housing stop (measurement A) must not exceed 24 mm (.94 inches).

3.7L ENGINE

NOTE: The belt routing schematics are published from the latest information available at the time of publication. If anything differs between these schematics and the Belt Routing Label, use the schematics on Belt Routing Label. This label is located in the engine compartment.

Belt tension is not adjustable. Belt adjustment is maintained by an automatic (spring load) belt tensioner.

(1) Check condition of all pulleys.

CAUTION: When installing the serpentine accessory drive belt, the belt MUST be routed correctly. If not, the engine may overheat due to the water pump rotating in the wrong direction (Fig. 4).

(2) Install new belt (Fig. 4). Route the belt around all pulleys except the idler pulley. Rotate the tensioner arm until it contacts its stop position. Route the belt around the idler and slowly let the tensioner rotate into the belt. Make sure the belt is seated onto all pulleys.

(3) With the drive belt installed, inspect the belt wear indicator (Fig. 7). On 3.7L Engines the gap between the tang and the housing stop (measurement A) must not exceed 24 mm (.94 inches).

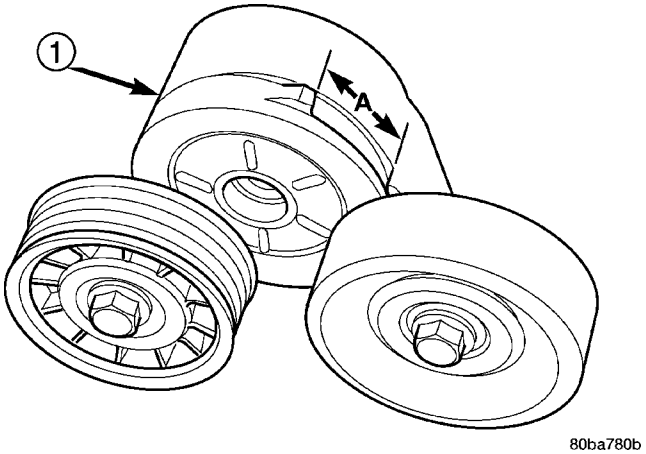

Fig. 7 Accessory Drive Belt Wear Indicator

1 - AUTOMATIC TENSIONER ASSEMBLY

ENGINE

TABLE OF CONTENTS

page

COOLANT
DESCRIPTION
HOAT COOLANT 23
ENGINE COOLANT 24
OPERATION 24
COOLANT RECOVERY CONTAINER
DESCRIPTION
COOLANT RECOVERY PRESSURE SYSTEM - 3.7L/2.8L DIESEL 24
COOLANT RECOVERY NON-PRESSURE SYSTEM - 2.4L 24
OPERATION
COOLANT RECOVERY PRESSURE SYSTEM - 3.7L/2.8L DIESEL 25
COOLANT RECOVERY NON-PRESSURE SYSTEM - 2.4L 25
REMOVAL
PRESSURE SYSTEM - 3.7L/2.8L DIESEL . . . 26
NON-PRESSURE SYSTEM - 2.4L 26
INSTALLATION
PRESSURE SYSTEM - 3.7L/2.8L DIESEL . . . 26
NON-PRESSURE SYSTEM - 2.4L 26
ENGINE BLOCK HEATER
DESCRIPTION 26
OPERATION 27
REMOVAL
REMOVAL - 2.4L 27
REMOVAL - 3.7L 27
INSTALLATION
INSTALLATION - 2.4L 27
INSTALLATION - 3.7L 27
ENGINE COOLANT TEMPERATURE SENSOR
DESCRIPTION 28
OPERATION 28
REMOVAL
2.4L ENGINE 28
3.7L ENGINE 29
INSTALLATION
2.4L ENGINE 29
3.7L ENGINE 29
ENGINE COOLANT THERMOSTAT
DESCRIPTION
DESCRIPTION - 3.7L ENGINE 29
DESCRIPTION 30
OPERATION 30
DIAGNOSIS AND TESTING - THERMOSTAT . . . 30
REMOVAL
2.4L ENGINE 30
3.7L ENGINE 30
INSTALLATION
2.4L ENGINE 31
3.7L ENGINE 31
HOSE CLAMPS
DESCRIPTION - HOSE CLAMPS 31
OPERATION - HOSE CLAMPS 31
RADIATOR
DESCRIPTION 33
REMOVAL
2.4L ENGINE 33
CLEANING 34
INSPECTION 34
INSTALLATION
2.4L ENGINE 35
RADIATOR PRESSURE CAP
DESCRIPTION 35
OPERATION 35
DIAGNOSIS AND TESTING
RADIATOR PRESSURE CAP - GAS ENGINES 35
CLEANING 36
INSPECTION 36
RADIATOR FAN - ELECTRIC
DESCRIPTION 36
OPERATION 36
REMOVAL
REMOVAL 36
REMOVAL 37
INSTALLATION
INSTALLATION 38
INSTALLATION 38
RADIATOR - FAN - VISCOUS
DESCRIPTION 38
OPERATION 38
DIAGNOSIS AND TESTING
VISCOUS FAN DRIVE 38
REMOVAL
3.7L ENGINE 39
CLEANING 39
INSPECTION 39
INSTALLATION
3.7L ENGINE 40
THERMOSTAT HOUSING
REMOVAL 40
INSTALLATION 40
WATER PUMP
DESCRIPTION
3.7L ENGINE 40
2.4L ENGINE 41

DESCRIPTION - WATER PUMP BYPASS - 3.7L 41
OPERATION
2.4L/3.7L ENGINES 41
REMOVAL
2.4L ENGINE 41
3.7L 42
CLEANING 43
INSPECTION 43
INSTALLATION
2.4L ENGINE 43
3.7L ENGINE 43

COOLANT

DESCRIPTION

HOAT COOLANT

WARNING: ANTIFREEZE IS AN ETHYLENE-GLYCOL BASE COOLANT AND IS HARMFUL IF SWALLOWED OR INHALED. IF SWALLOWED, DRINK TWO GLASSES OF WATER AND INDUCE VOMITING. IF INHALED, MOVE TO FRESH AIR AREA. SEEK MEDICAL ATTENTION IMMEDIATELY. DO NOT STORE IN OPEN OR UNMARKED CONTAINERS. WASH SKIN AND CLOTHING THOROUGHLY AFTER COMING IN CONTACT WITH ETHYLENE-GLYCOL. KEEP OUT OF REACH OF CHILDREN. DISPOSE OF GLYCOL BASE COOLANT PROPERLY, CONTACT YOUR DEALER OR GOVERNMENT AGENCY FOR LOCATION OF COLLECTION CENTER IN YOUR AREA. DO NOT OPEN A COOLING SYSTEM WHEN THE ENGINE IS AT OPERATING TEMPERATURE OR HOT UNDER PRESSURE, PERSONAL INJURY CAN RESULT. AVOID RADIATOR COOLING FAN WHEN ENGINE COMPARTMENT RELATED SERVICE IS PERFORMED, PERSONAL INJURY CAN RESULT.

CAUTION: Use of Propylene-Glycol based coolants is not recommended, as they provide less freeze protection and less corrosion protection.

The cooling system is designed around the coolant. The coolant must accept heat from engine metal, in the cylinder head area near the exhaust valves and engine block. Then coolant carries the heat to the radiator where the tube/fin radiator can transfer the heat to the air.

The use of aluminum cylinder blocks, cylinder heads, and water pumps requires special corrosion protection. Mopar® Antifreeze/Coolant, 5 Year/100,000 Mile Formula (MS-9769), or the equivalent ethylene-glycol base coolant with organic corrosion inhibitors (called HOAT, for Hybrid Organic Additive Technology) is recommended. This coolant offers the best engine cooling without corrosion when mixed with 50% ethylene-glycol and 50% distilled water to obtain a freeze point of -37°C (-35°F). If it loses color or becomes contaminated, drain, flush, and replace with fresh properly mixed coolant solution.

CAUTION: Mopar® Antifreeze/Coolant, 5 Year/100,000 Mile Formula (MS-9769) may not be mixed with any other type of antifreeze. Mixing of coolants other than specified (non-HOAT or other HOAT), may result in engine damage that may not be covered under the new vehicle warranty, and decreased corrosion protection.

COOLANT PERFORMANCE

The required ethylene-glycol (antifreeze) and water mixture depends upon climate and vehicle operating conditions. The coolant performance of various mixtures follows:

Pure Water- Water can absorb more heat than a mixture of water and ethylene-glycol. This is for purpose of heat transfer only. Water also freezes at a higher temperature and allows corrosion.

100 percent Ethylene-Glycol - The corrosion inhibiting additives in ethylene-glycol need the presence of water to dissolve. Without water, additives form deposits in system. These act as insulation causing temperature to rise to as high as 149°C (300°F). This temperature is hot enough to melt plastic and soften solder. The increased temperature can result in engine detonation. In addition, 100 percent ethylene-glycol freezes at -22°C (-8°F).

50/50 Ethylene-Glycol and Water - Is the recommended mixture, it provides protection against freezing to -37°C (-34°F). The antifreeze concentration **must always** be a minimum of 44 percent, year-round in all climates. If percentage is lower, engine parts may be eroded by cavitation. Maximum protection against freezing is provided with a 68 percent antifreeze concentration, which prevents freezing down to -67.7°C (-90°F). A higher percentage will freeze at a warmer temperature. Also, a higher percentage of antifreeze can cause the engine to overheat because specific heat of antifreeze is lower than that of water.

CAUTION: Richer antifreeze mixtures cannot be measured with normal field equipment and can cause problems associated with 100 percent ethylene-glycol.

COOLANT SELECTION AND ADDITIVES

The use of aluminum cylinder blocks, cylinder heads and water pumps requires special corrosion protection. Only Mopar® Antifreeze/Coolant, 5

COOLANT (Continued)

Year/100,000 Mile Formula (glycol base coolant with corrosion inhibitors called HOAT, for Hybrid Organic Additive Technology) is recommended. This coolant offers the best engine cooling without corrosion when mixed with 50% distilled water to obtain to obtain a freeze point of -37°C (-35°F). If it loses color or becomes contaminated, drain, flush, and replace with fresh properly mixed coolant solution.

CAUTION: Do not use coolant additives that are claimed to improve engine cooling.

ENGINE COOLANT

ETHYLENE-GLYCOL MIXTURES

CAUTION: Richer antifreeze mixtures cannot be measured with normal field equipment and can cause problems associated with 100 percent ethylene-glycol.

The required ethylene-glycol (antifreeze) and water mixture depends upon the climate and vehicle operating conditions. The recommended mixture of 50/50 ethylene-glycol and water will provide protection against freezing to -37° C (-35° F). The antifreeze concentration **must always** be a minimum of 44 percent, year-round in all climates. **If percentage is lower than 44 percent, engine parts may be eroded by cavitation, and cooling system components may be severely damaged by corrosion.** Maximum protection against freezing is provided with a 68 percent antifreeze concentration, which prevents freezing down to -67.7° C (-90° F). A higher percentage will freeze at a warmer temperature. Also, a higher percentage of antifreeze can cause the engine to overheat because the specific heat of antifreeze is lower than that of water.

Use of 100 percent ethylene-glycol will cause formation of additive deposits in the system, as the corrosion inhibitive additives in ethylene-glycol require the presence of water to dissolve. The deposits act as insulation, causing temperatures to rise to as high as 149° C (300° F). This temperature is hot enough to melt plastic and soften solder. The increased temperature can result in engine detonation. In addition, 100 percent ethylene-glycol freezes at 22° C (-8° F).

PROPYLENE-GLYCOL MIXTURES

It's overall effective temperature range is smaller than that of ethylene-glycol. The freeze point of 50/50 propylene-glycol and water is -32° C (-26° F). 5° C higher than ethylene-glycol's freeze point. The boiling point (protection against summer boil-over) of propylene-glycol is 125° C (257° F) at 96.5 kPa (14 psi), compared to 128° C (263° F) for ethylene-glycol. Use of propylene-glycol can result in boil-over or freeze-up on a cooling system designed for ethylene-glycol. Propylene glycol also has poorer heat transfer characteristics than ethylene glycol. This can increase cylinder head temperatures under certain conditions.

Propylene-glycol/ethylene-glycol Mixtures can cause the destabilization of various corrosion inhibitors, causing damage to the various cooling system components. Also, once ethylene-glycol and propylene-glycol based coolants are mixed in the vehicle, conventional methods of determining freeze point will not be accurate. Both the refractive index and specific gravity differ between ethylene glycol and propylene glycol.

OPERATION

Coolant flows through the engine block absorbing the heat from the engine, then flows to the radiator where the cooling fins in the radiator transfers the heat from the coolant to the atmosphere. During cold weather the ethylene-glycol or propylene-glycol coolant prevents water present in the cooling system from freezing within temperatures indicated by mixture ratio of coolant to water.

COOLANT RECOVERY CONTAINER

DESCRIPTION

COOLANT RECOVERY PRESSURE SYSTEM - 3.7L/2.8L DIESEL

This system works on the principal of a closed and deaerated system using thermally generated pressure. The expansion and contraction of the coolant in the pressurized closed system keeps it free of trapped air. It provides:

- A pressurized surge tank volume for expansion and contraction.
- A non-pressurized overflow volume to capture excess coolant expansion and allow for it's return to the pressurized system.
- A pressurized cap on the pressure bottle rather then the radiator. This facilitates deaeration of the system.
- Reserve coolant is included in the pressurized volume to account for minor leaks and evaporation or boiling losses.
- Provides a warning light for low coolant level.

COOLANT RECOVERY NON-PRESSURE SYSTEM - 2.4L

This system works on the principal of a closed and completely deaerated system using thermally gener-

ated pressure. The bottle acts as a reserve coolant source to keep air out of the system but must have a specified minimum amount of coolant in the bottle at all times. The expansion and contraction of the coolant in the pressurized closed coolant loop allows the reserve bottle to accept and give up excess fluid via a hose from the radiator neck. It provides:

- A non-pressurized reserve coolant tank volume for expansion and contraction of coolant.
- A pressurized cap on the radiator. This keeps the main loop of the cooling system at an elevated operating pressure and prevents coolant boiling at lower temperatures. It is the highest point in the 2.4L.
- Reserve coolant is included in the non-pressurized tank in enough quantity to account for minor leaks and evaporation or boiling losses, and to keep the return line back to the radiator full at all times. Failure to do so could allow air to be sucked back into the radiator as the engine and engine coolant cool down and the coolant volume contracts.

OPERATION

COOLANT RECOVERY PRESSURE SYSTEM - 3.7L/2.8L DIESEL

As the engine warms, the coolant in the closed system expands. The pressurized bottle accepts the expanding fluid. Then, when the thermostat opens and a high demand for coolant is placed on the system, the pressurized surge tank side of the bottle can supply the temporary additional volume of coolant demanded by the system. Once the water pump catches up with the flow demand, the tank returns to equilibrium. A separate compartment in the bottle accepts the overflow coolant which is then drawn back into the primary side of the bottle when the engine and coolant cool down

The advantage of the pressurized system is that any excess air in the cooling system is routed to the top of the bottle via a vent hose at the thermostat housing to the bottle. This air accumulates at the top of the pressurized volume in the bottle (the highest point in the system) and is forced out of the system through the pressure cap. This keeps the system properly deaerated and maintains pressure in the cooling system to prevent water pump cavitation

The diesel bottle has an additional vent line back to the radiator that is immersed in the coolant bath at the bottle. This also ensures air at the radiator is routed back to bottle for expulsion and that a constant head of liquid is present at the radiator.

COOLANT RECOVERY NON-PRESSURE SYSTEM - 2.4L

As the engine warms, the coolant in the closed system expands and builds up pressure against the radiator pressure cap. When pressure, on occasion, exceeds the rated pressure of the cap, the coolant forces the lower seal open and allows the expanded coolant volume to flow into the hose leading to the external coolant bottle. The bottle accepts the expanding fluid. This allows the main circuit to remain full of coolant with no air. Then, when the engine is in an environment where it is transferring less heat, or it is shut off and starts to cool down, the coolant also begins to contract. As it contracts, it begins to create a vacuum in the enclosed space of the radiator cap and filler neck that starts to draw coolant back into the radiator from the external coolant bottle. The coolant flows into the radiator through a bleed hole in the lower area of the radiator pressure cap. This method of operation requires that the bottle have a minimum amount of coolant in it at ambient temperatures, as it would be highly undesirable for the radiator vacuum to suck in air from a depleted coolant bottle.

The advantage of the coolant recovery bottle is cost. The system is much less sophisticated then a pressurized bottle system but puts a premium on a successful coolant fill that contains no air. The coolant bottle cannot be allowed to run dry. If it does, air could be sucked into the system, the water pump could cavitate and the cooling system be destroyed or severely damaged.

COOLANT RECOVERY CONTAINER (Continued)

REMOVAL

PRESSURE SYSTEM - 3.7L/2.8L DIESEL

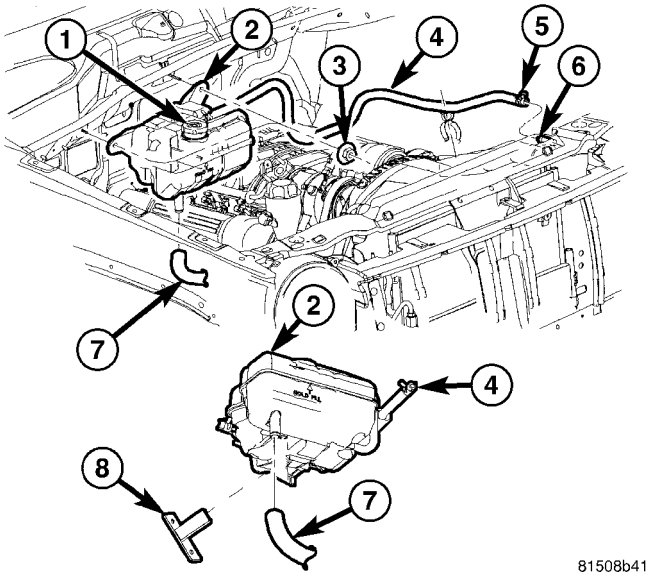

Fig. 1 COOLANT BOTTLE - PRESSURE SYSTEM

1 - PRESSURE CAP
2 - COOLANT BOTTLE
3 - MOUNTING NUTS
4 - COOLANT BOTTLE TO RADIATOR HOSE
5 - CLAMP
6 - RADIATOR
7 - LOWER HOSE
8 - MOUNTING BRACKET

(1) Remove pressure cap from bottle (Fig. 1).
(2) Siphon coolant from pressure bottle into a contaminant free container.
(3) Disconnect coolant bottle to radiator hose at coolant bottle.
(4) Disconnect lower hose at coolant bottle.
(5) Remove mounting nuts.
(6) Remove coolant bottle from bracket.

NON-PRESSURE SYSTEM - 2.4L

(1) Remove mounting nuts. (Fig. 2)
(2) Siphon coolant out of coolant bottle.
(3) Lift coolant bottle and remove coolant bottle to radiator hose at bottom of coolant bottle.

INSTALLATION

PRESSURE SYSTEM - 3.7L/2.8L DIESEL

(1) Position pressure bottle on mounting bracket.
(2) Install mounting nuts. Tighten nuts to 8.5 N·m (75 in. lbs.).
(3) Install lower hose at coolant bottle.
(4) Install radiator to coolant bottle hose at coolant bottle.

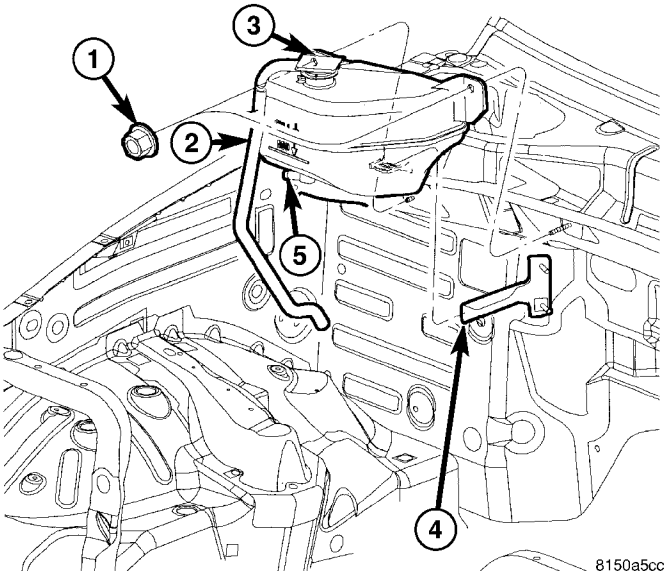

Fig. 2 COOLANT BOTTLE - NON-PRESSURE SYSTEM

1 - NUT
2 - OVERFLOW TUBE
3 - COOLANT BOTTLE
4 - MOUNTING BRACKET
5 - COOLANT BOTTLE TO RADIATOR HOSE

(5) Fill cooling system (Refer to 7 - COOLING - STANDARD PROCEDURE).

NON-PRESSURE SYSTEM - 2.4L

(1) Connect coolant bottle to radiator hose to the bottom of coolant bottle.
(2) Position coolant bottle on mounting bracket.
(3) Install mounting nuts. Tighten to 8.5 N·m (75 in. lbs.).
(4) Fill cooling system (Refer to 7 - COOLING - STANDARD PROCEDURE)
.

ENGINE BLOCK HEATER

DESCRIPTION

The block heater is operated by ordinary house current (110 Volt A.C.) through a power cord and connector located in the engine compartment. The heater is mounted in a core hole (in place of a core hole plug) in the engine block, with the heating element immersed in coolant.

CAUTION: The power cord must be secured in its retainer clips, and not positioned so it could contact linkages or exhaust manifolds and become damaged.

ENGINE BLOCK HEATER (Continued)

OPERATION

The block heater element is submerged in the cooling system's coolant. When electrical power (110 volt A.C.) is applied to the element, it creates heat. This heat is transferred to the engine coolant. This provides easier engine starting and faster warm-up when vehicle is operated in areas having extremely low temperatures.

REMOVAL

REMOVAL - 2.4L

(1) Drain cooling system (Refer to 7 - COOLING/ ENGINE - STANDARD PROCEDURE).
(2) Raise vehicle on hoist.
(3) Detach power cord plug from heater.
(4) Loosen screw in center of heater. Remove heater assembly.

REMOVAL - 3.7L

(1) Drain cooling system (Refer to 7 - COOLING - STANDARD PROCEDURE).
(2) Raise vehicle on hoist.
(3) Detach power cord plug from heater.
(4) Loosen screw in center of heater. Remove heater assembly.

INSTALLATION

INSTALLATION - 2.4L

(1) Thoroughly clean core hole and heater seat.
(2) Insert heater assembly (Fig. 3) with element loop positioned **upward** .
(3) With heater seated, tighten center screw securely to assure a positive seal.

CAUTION: To prevent damage, the power cord must be secured in it's retaining clips, and not positioned so it could contact linkages or exhaust manifold.

(4) Connect power cord to heater.
(5) Lower vehicle.
(6) Fill cooling system (Refer to 7 - COOLING/ENGINE - STANDARD PROCEDURE).

INSTALLATION - 3.7L

(1) Thoroughly clean core hole and heater seat.
(2) Insert heater assembly (Fig. 4) with element loop positioned **upward** .
(3) With heater seated, tighten center screw securely to assure a positive seal.

CAUTION: To prevent damage, the power cord must be secured in it's retaining clips, and not positioned so it could contact linkages or exhaust manifold.

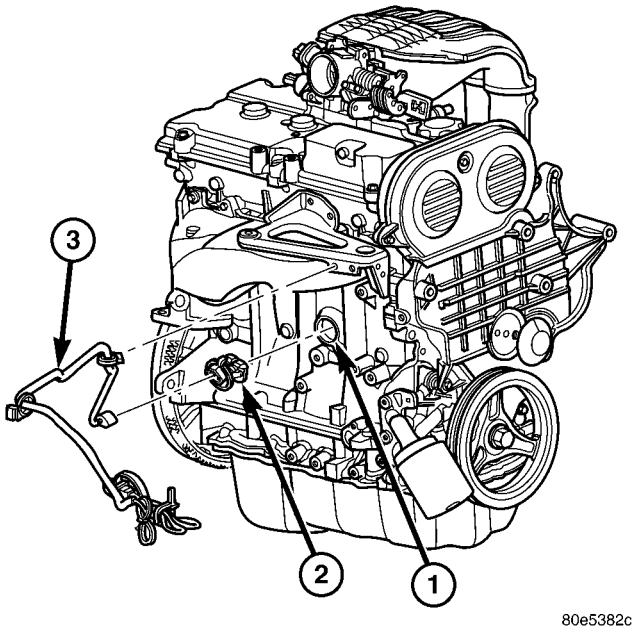

Fig. 3 ENGINE BLOCK HEATER 2.4L

1 - CORE HOLE
2 - BLOCK HEATER
3 - POWER CORD

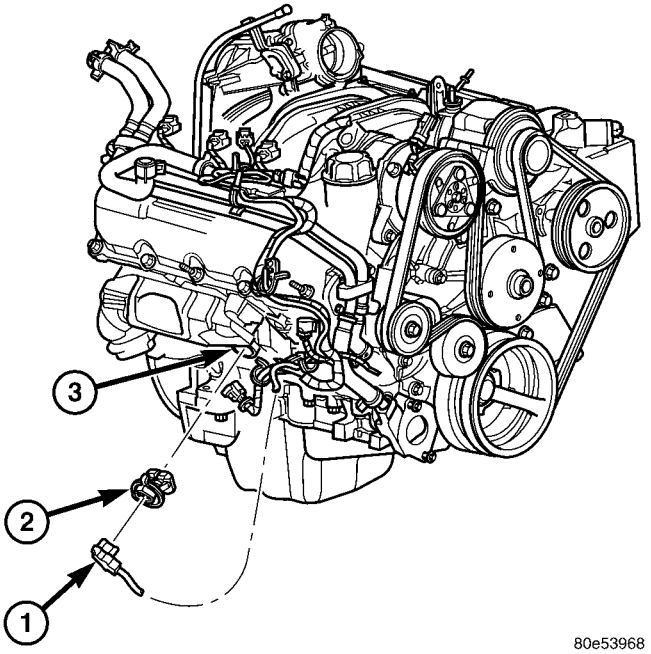

Fig. 4 ENGINE BLOCK HEATER 3.7L

1 - POWER CORD
2 - BLOCK HEATER
3 - CORE HOLE

(4) Connect power cord to heater.
(5) Lower vehicle.
(6) Fill cooling system (Refer to 7 - COOLING - STANDARD PROCEDURE).

ENGINE COOLANT TEMPERATURE SENSOR

DESCRIPTION

The Engine Coolant Temperature (ECT) sensor is used to sense engine coolant temperature. The sensor protrudes into an engine water jacket.

The ECT sensor is a two-wire Negative Thermal Coefficient (NTC) sensor. Meaning, as engine coolant temperature increases, resistance (voltage) in the sensor decreases. As temperature decreases, resistance (voltage) in the sensor increases.

OPERATION

At key-on, the Powertrain Control Module (PCM) sends out a regulated 5 volt signal to the ECT sensor. The PCM then monitors the signal as it passes through the ECT sensor to the sensor ground (sensor return).

When the engine is cold, the PCM will operate in Open Loop cycle. It will demand slightly richer air-fuel mixtures and higher idle speeds. This is done until normal operating temperatures are reached.

The PCM uses inputs from the ECT sensor for the following calculations:

- for engine coolant temperature gauge operation through CCD or PCI (J1850) communications
- Injector pulse-width
- Spark-advance curves
- ASD relay shut-down times
- Idle Air Control (IAC) motor key-on steps
- Pulse-width prime-shot during cranking
- O2 sensor closed loop times
- Purge solenoid on/off times
- EGR solenoid on/off times (if equipped)
- Leak Detection Pump operation (if equipped)
- Radiator fan relay on/off times (if equipped)
- Target idle speed

REMOVAL

2.4L ENGINE

The Engine Coolant Temperature (ECT) sensor is installed into a water jacket at left front of cylinder head (Fig. 5).

WARNING: HOT, PRESSURIZED COOLANT CAN CAUSE INJURY BY SCALDING. COOLING SYSTEM MUST BE PARTIALLY DRAINED BEFORE REMOVING THE COOLANT TEMPERATURE SENSOR.

(1) Partially drain cooling system.
(2) Disconnect electrical connector from sensor.
(3) Remove sensor from cylinder head.

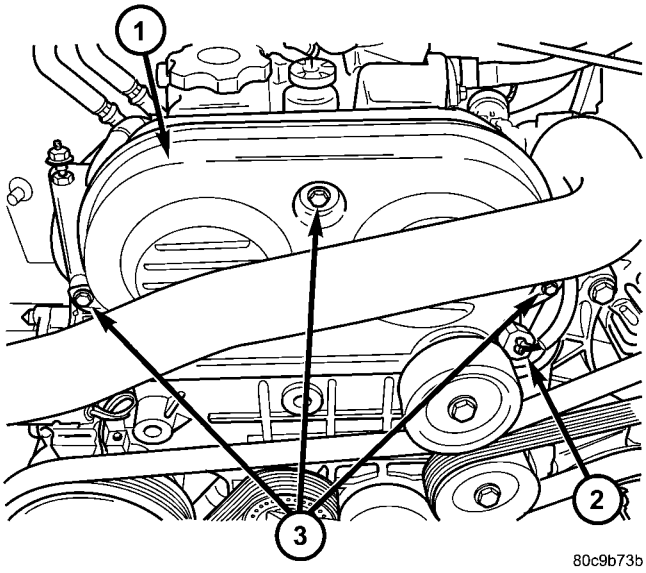

Fig. 5 ECT AND UPPER TIMING BELT COVER/ BOLTS-2.4L

1 - UPPER TIMING BELT COVER
2 - ELECTRICAL CONNECTOR (ECT)
3 - MOUNTING BOLTS (3)

ENGINE COOLANT TEMPERATURE SENSOR (Continued)

3.7L ENGINE

The Engine Coolant Temperature (ECT) sensor is installed into a water jacket at front of intake manifold near rear of generator (Fig. 6).

WARNING: HOT, PRESSURIZED COOLANT CAN CAUSE INJURY BY SCALDING. COOLING SYSTEM MUST BE PARTIALLY DRAINED BEFORE REMOVING THE COOLANT TEMPERATURE SENSOR.

(1) Partially drain cooling system.
(2) Disconnect electrical connector from sensor.
(3) Remove sensor from intake manifold.

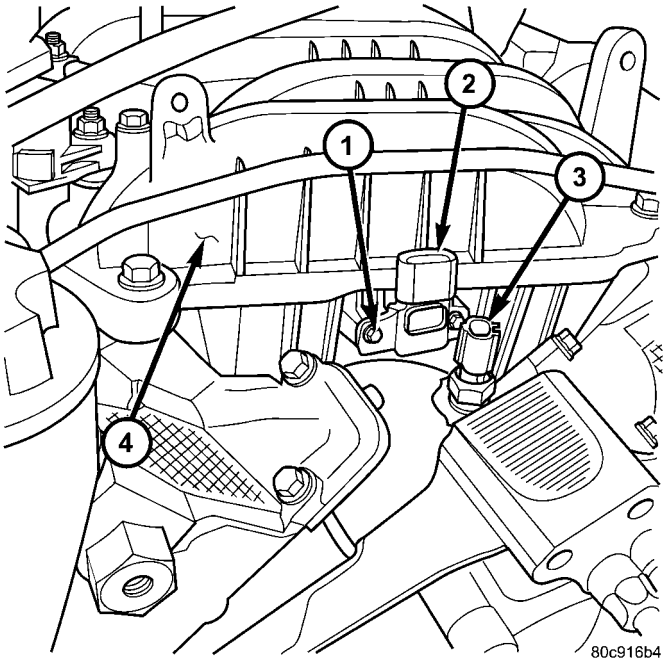

Fig. 6 MAP SENSOR / ECT SENSOR - 3.7L V-6

1 - MOUNTING SCREWS
2 - MAP SENSOR
3 - ECT SENSOR
4 - FRONT OF INTAKE MANIFOLD

INSTALLATION

2.4L ENGINE

(1) Apply thread sealant to sensor threads.
(2) Install sensor to engine.
(3) Tighten sensor to 11 N·m (8 ft. lbs.) torque.
(4) Replace any lost engine coolant.

3.7L ENGINE

(1) Apply thread sealant to sensor threads.
(2) Install sensor to engine.
(3) Tighten sensor to 11 N·m (8 ft. lbs.) torque.
(4) Replace any lost engine coolant.

ENGINE COOLANT THERMOSTAT

DESCRIPTION

DESCRIPTION - 3.7L ENGINE

CAUTION: Do not operate an engine without a thermostat, except for servicing or testing.

A pellet-type thermostat controls the operating temperature of the engine by controlling the amount of coolant flow to the radiator. On all engines the thermostat is closed below 195°F (90°C). Above this temperature, coolant is allowed to flow to the radiator. This provides quick engine warm up and overall temperature control. On the 3.7L engine the thermostat is designed to block the flow of the coolant bypass journal by 50% instead of completely blocking the flow. This design controls coolant temperature more accurately (Fig. 7).

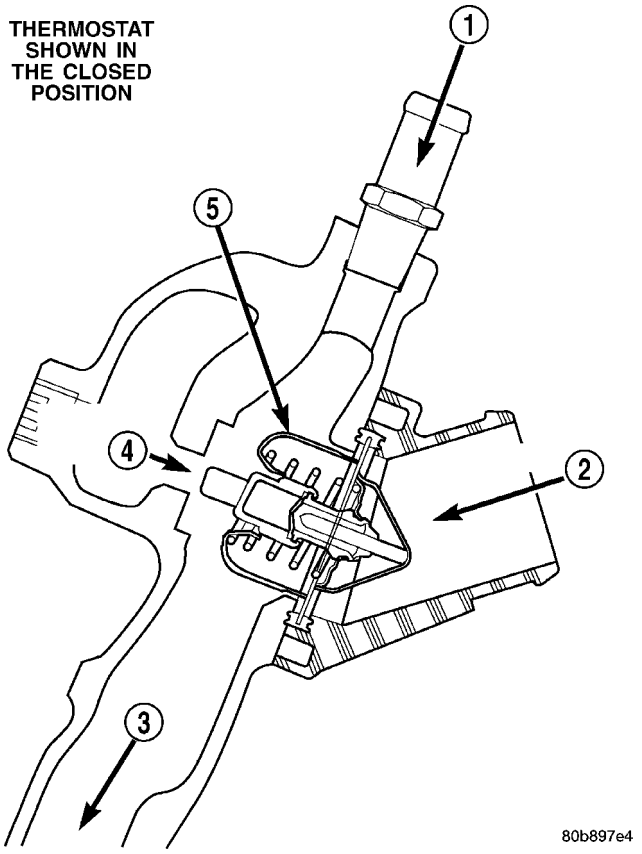

Fig. 7 3.7L Thermostat

1 - FROM HEATER
2 - FROM RADIATOR
3 - TO WATER PUMP
4 - ENGINE BYPASS
5 - THERMOSTAT

ENGINE COOLANT THERMOSTAT (Continued)

The same thermostat is used for winter and summer seasons. An engine should not be operated without a thermostat, except for servicing or testing. Operating without a thermostat causes other problems. These are: longer engine warmup time, unreliable warmup performance, increased exhaust emissions and crankcase condensation. This condensation can result in sludge formation.

DESCRIPTION

A pellet-type thermostat controls the operating temperature of the engine by controlling the amount of coolant flow to the radiator (Fig. 8).

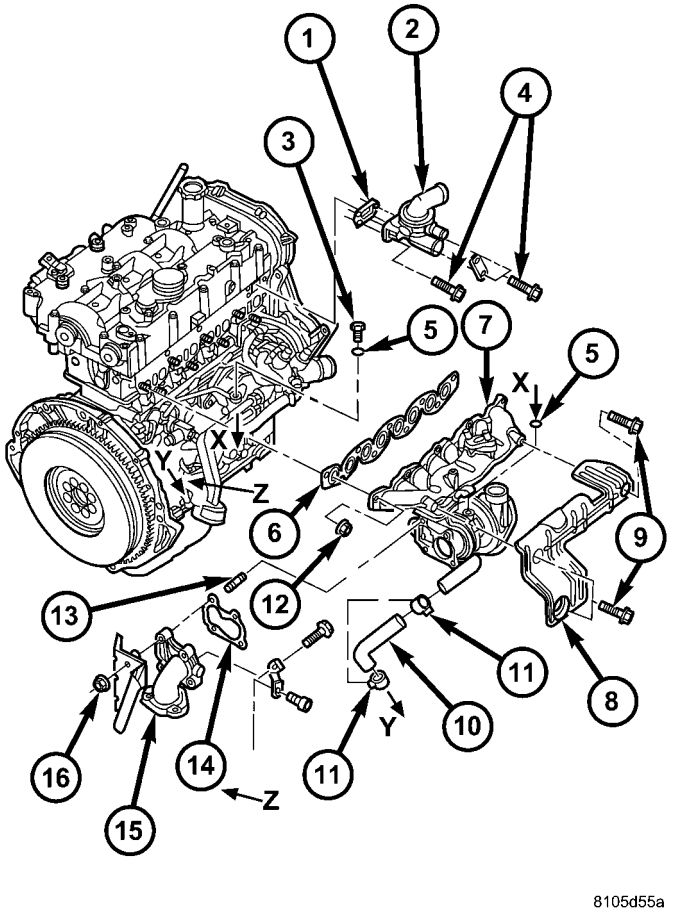

Fig. 8 THERMOSTAT HOUSING

1 - THERMOSTAT HOUSING GASKET
2 - THERMOSTAT HOUSING
3 - TURBOCHARGER OIL SUPPLY LINE BANJO BOLT
4 - THERMOSTAT HOUSING RETAINING BOLTS
5 - BRASS WASHER
6 - EXHAUST MANIFOLD GASKET
7 - EXHAUST MANIFOLD
8 - EXHAUST MANIFOLD HEATSHIELD
9 - EXHAUST MANIFOLD HEATSHIELD RETAINING BOLTS
10 - OIL RETURN HOSE
11 - HOSE CLAMPS
12 - EXHAUST MANIFOLD RETAINING NUTS
13 - TURBOCHARGER DOWNPIPE STUDS
14 - TURBOCHARGER DOWN PIPE GASKET
15 - TURBOCHARGER DOWNPIPE
16 - TURBOCHARGER DOWNPIPE RETAINING NUT

OPERATION

The thermostat starts to open at 80°C (176°F). Above this temperature, coolant is allowed to flow to the radiator. This provides quicker engine warmup and overall temperature control.

The same thermostat is used for winter and summer seasons. An engine should not be operated without a thermostat, except for servicing or testing. Operating without a thermostat causes other problems. These are: longer engine warmup time, unreliable warmup performance, increased exhaust emissions and crankcase condensation. This condensation can result in sludge formation.

DIAGNOSIS AND TESTING - THERMOSTAT

ON-BOARD DIAGNOSTICS

All models are equipped with On-Board Diagnostics for certain cooling system components. If the powertrain control module (PCM) detects low engine coolant temperature, it will record a Diagnostic Trouble Code (DTC). For other DTC numbers, (Refer to 25 - EMISSIONS CONTROL - DESCRIPTION).

The DTC can also be accessed through the DRB scan tool.

REMOVAL

2.4L ENGINE

(1) Drain cooling system below thermostat housing level.
(2) Disconnect engine coolant temperature sensor.
(3) Disconnect heater supply hose.
(4) Remove housing attaching bolts (Fig. 9).
(5) Remove housing, gasket and thermostat (Fig. 9).

3.7L ENGINE

WARNING: DO NOT LOOSEN RADIATOR DRAINCOCK WITH SYSTEM HOT AND PRESSURIZED. SERIOUS BURNS FROM COOLANT CAN OCCUR.

Do not waste reusable coolant. If solution is clean, drain coolant into a clean container for reuse.

If thermostat is being replaced, be sure that replacement is specified thermostat for vehicle model and engine type.

(1) Disconnect negative battery cable at battery.
(2) Drain cooling system (Refer to 7 - COOLING - STANDARD PROCEDURE).
(3) Raise vehicle on hoist.
(4) Remove splash shield.
(5) Remove lower radiator hose clamp and lower radiator hose at thermostat housing.

ENGINE COOLANT THERMOSTAT (Continued)

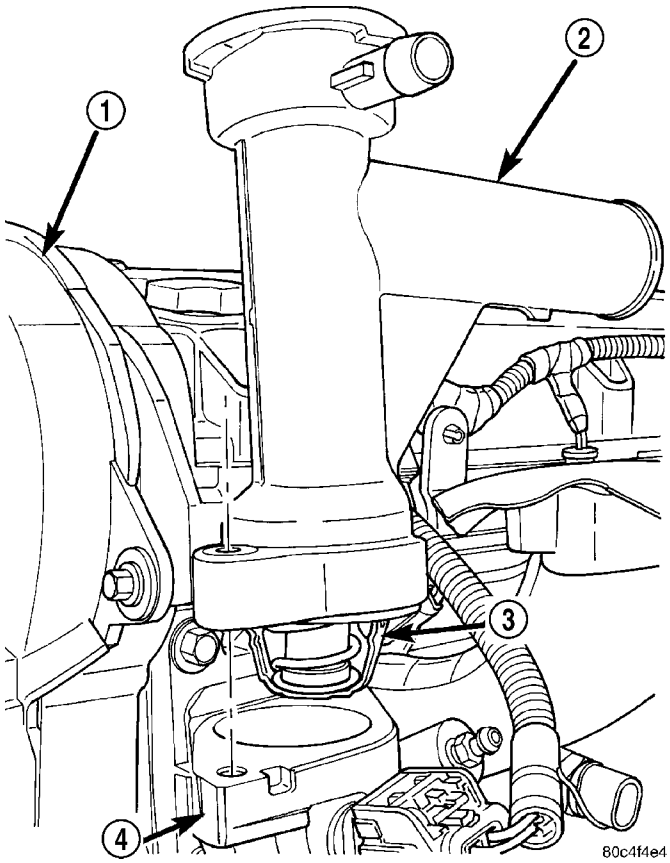

Fig. 9 Thermostat and Coolant Outlet Connector

1 - TIMING BELT COVER
2 - OUTLET CONNECTOR
3 - THERMOSTAT
4 - HOUSING

(6) Remove thermostat housing mounting bolts, thermostat housing and thermostat (Fig. 10).

INSTALLATION

2.4L ENGINE

(1) Clean all gasket sealing surfaces.

(2) Place a new gasket (dipped in clean water) on the coolant outlet connector surface. Position thermostat with air bleed at 12 o'clock position in thermostat housing.

(3) Position the coolant outlet connector and gasket over the thermostat, making sure thermostat is seated in the thermostat housing (Fig. 11).

(4) Position outlet connector to thermostat housing and install bolts. Tighten bolts to 28 N·m (20 ft. lbs.).

(5) Install radiator hose to coolant outlet housing.

(6) Connect engine coolant temperature sensor.

(7) Fill cooling system (Refer to 7 - COOLING - STANDARD PROCEDURE).

3.7L ENGINE

(1) Clean mating areas of timing chain cover and thermostat housing.

(2) Install thermostat (spring side down) into recessed machined groove on housing assembly. Make sure rubber seal locating tab is positioned in the corresponding notch in the housing.

(3) Position thermostat housing on timing chain cover.

(4) Install two housing-to-timing chain cover bolts. Tighten bolts to 12 N·m (105 in. lbs.) torque.

(5) Install lower radiator hose on thermostat housing.

(6) Install splash shield.

(7) Lower vehicle.

(8) Fill cooling system (Refer to 7 - COOLING - STANDARD PROCEDURE).

(9) Connect negative battery cable to battery.

(10) Start and warm the engine. Check for leaks.

HOSE CLAMPS

DESCRIPTION - HOSE CLAMPS

The cooling system utilizes spring type hose clamps. If a spring type clamp replacement is necessary, replace with the original Mopar® equipment spring type clamp.

WARNING: CONSTANT TENSION HOSE CLAMPS ARE USED ON MOST COOLING SYSTEM HOSES. WHEN REMOVING OR INSTALLING, USE ONLY TOOLS DESIGNED FOR SERVICING THIS TYPE OF CLAMP, SUCH AS SPECIAL CLAMP TOOL NUMBER 6094. (Fig. 12). ALWAYS WEAR SAFETY GLASSES WHEN SERVICING CONSTANT TENSION CLAMPS.

CAUTION: A number or letter is stamped into the tongue of constant tension clamps. If replacement is necessary, use only a original equipment clamp with matching number or letter (Fig. 12).

OPERATION - HOSE CLAMPS

The spring type hose clamp applies constant tension on a hose connection. To remove a spring type hose clamp, only use constant tension clamp pliers designed to compress the hose clamp.

HOSE CLAMPS (Continued)

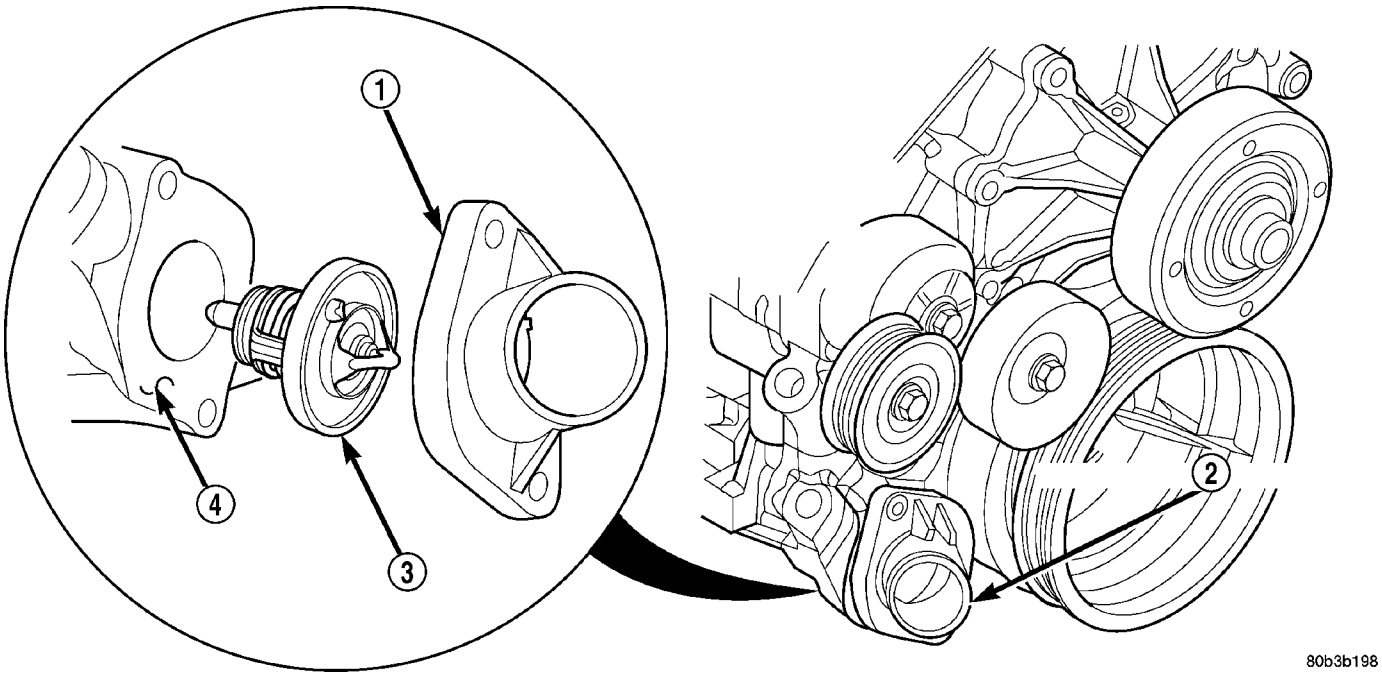

Fig. 10 Thermostat and Thermostat Housing

1 - THERMOSTAT HOUSING
2 - THERMOSTAT LOCATION
3 - THERMOSTAT AND GASKET
4 - TIMING CHAIN COVER

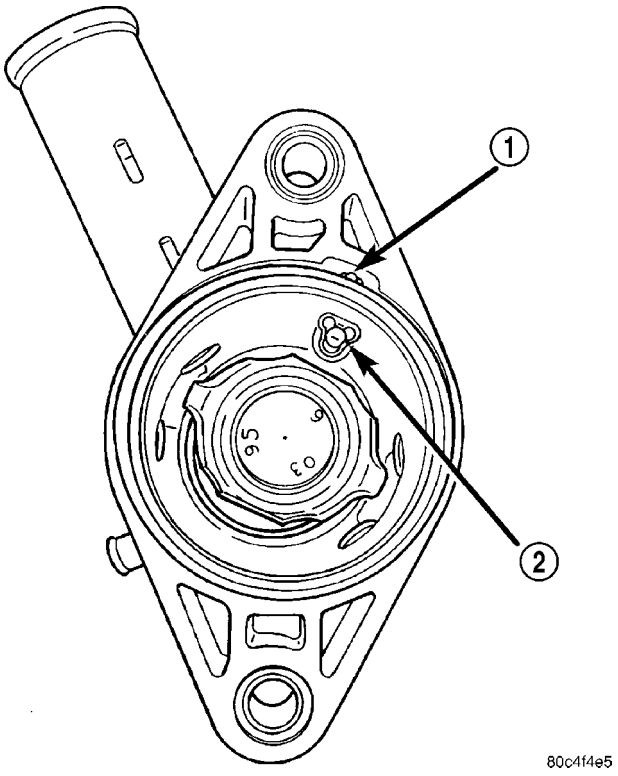

Fig. 11 Thermostat Position

1 - LOCATOR NOTCH
2 - AIR BLEED

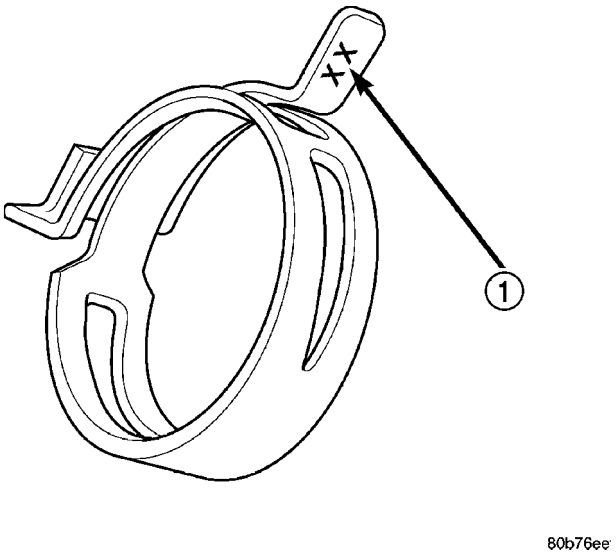

Fig. 12 Spring Clamp Size Location

1 - SPRING CLAMP SIZE LOCATION

RADIATOR

DESCRIPTION

All vehicles are equipped with a cross flow type radiator with plastic side tanks (Fig. 13).

Plastic tanks, while stronger than brass, are subject to damage by impact, such as from tools or wrenches. Handle radiator with care.

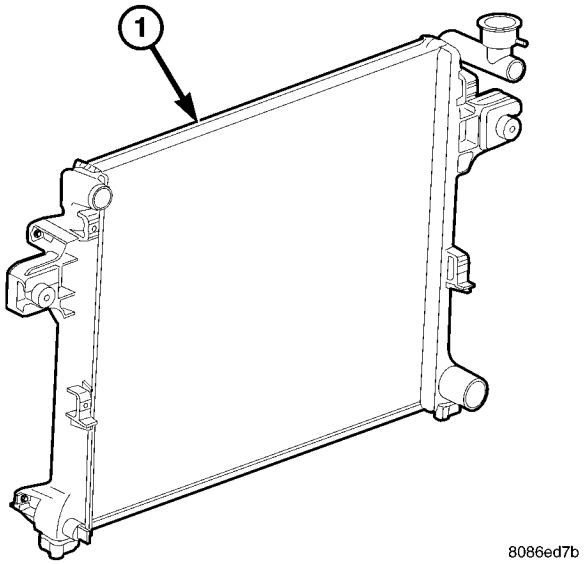

Fig. 13 Cross Flow Radiator - Typical

1 - RADIATOR

REMOVAL

2.4L ENGINE

WARNING: DO NOT REMOVE THE CYLINDER BLOCK DRAIN PLUGS OR LOOSEN THE RADIATOR DRAINCOCK WITH THE SYSTEM HOT AND UNDER PRESSURE. SERIOUS BURNS FROM COOLANT CAN OCCUR. REFER TO COOLING SYSTEM DRAINING.

Do not waste reusable coolant. If the solution is clean, drain the coolant into a clean container for reuse.

WARNING: CONSTANT TENSION HOSE CLAMPS ARE USED ON MOST COOLING SYSTEM HOSES. WHEN REMOVING OR INSTALLING, USE ONLY TOOLS DESIGNED FOR SERVICING THIS TYPE OF CLAMP, SUCH AS SPECIAL CLAMP TOOL NUMBER 6094 (Fig. 14). ALWAYS WEAR SAFETY GLASSES WHEN SERVICING CONSTANT TENSION CLAMPS.

CAUTION: A number or letter is stamped into the tongue of constant tension clamps (Fig. 15). If replacement is necessary, use only an original equipment clamp with matching number or letter.

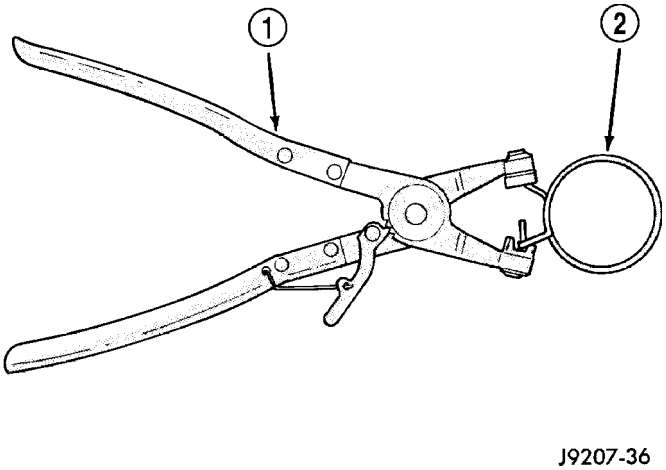

Fig. 14 Hose Clamp Tool - Typical

1 - HOSE CLAMP TOOL 6094
2 - HOSE CLAMP

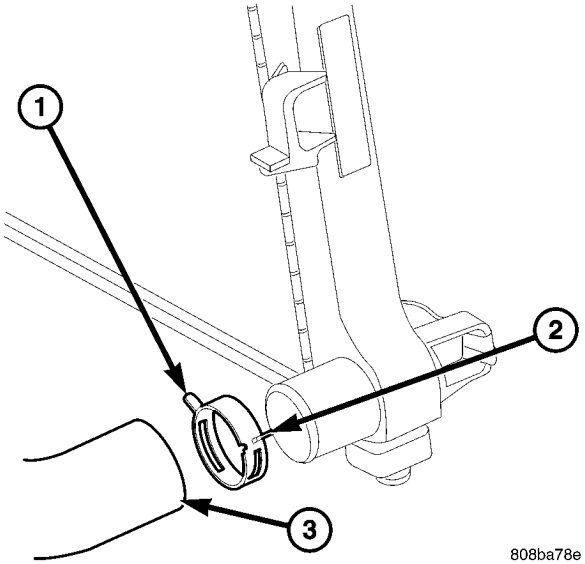

Fig. 15 Clamp Number/Letter Location - Typical

1 - TYPICAL CONSTANT TENSION HOSE CLAMP
2 - CLAMP NUMBER/LETTER LOCATION
3 - TYPICAL HOSE

RADIATOR (Continued)

CAUTION: When removing the radiator or A/C condenser for any reason, note the location of all radiator-to-body and radiator-to-A/C condenser rubber air seals (Fig. 16). These are used at the top, bottom and sides of the radiator and A/C condenser. To prevent overheating, these seals must be installed to their original positions.

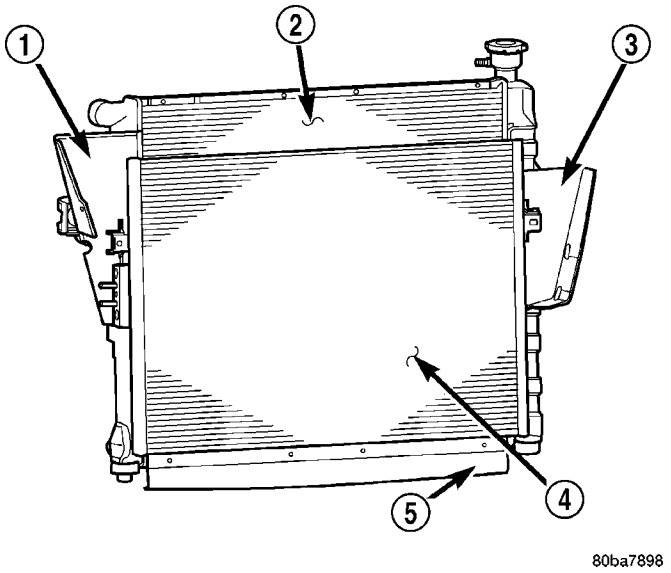

Fig. 16 Air Seals - Typical

1 - AIR DAM
2 - RADIATOR
3 - AIR DAM
4 - A/C CONDENSER
5 - AIR SEAL

(1) Disconnect the negative battery cable at battery.

(2) Drain coolant from radiator (Refer to 7 - COOLING - STANDARD PROCEDURE).

(3) Remove the front grill (Refer to 23 - BODY/EXTERIOR/GRILLE - REMOVAL).

(4) Remove the cooling fan from the engine, if equipped.

(5) Remove the two radiator mounting bolts.

(6) Disconnect the connector for the electric fan.

(7) Disconnect the power steering cooler line from cooler.

(8) Disconnect the radiator upper and lower hoses.

(9) Disconnect the overflow hose from radiator.

(10) The lower part of radiator is equipped with two alignment dowel pins (Fig. 17). They are located on the bottom of radiator tank and fit into rubber grommets. These rubber grommets are pressed into the radiator lower crossmember.

WARNING: THE AIR CONDITIONING SYSTEM (IF EQUIPPED) IS UNDER A CONSTANT PRESSURE EVEN WITH THE ENGINE OFF. REFER TO REFRIGERANT WARNINGS IN, HEATING AND AIR CONDITIONING BEFORE HANDLING ANY AIR CONDITIONING COMPONENT.

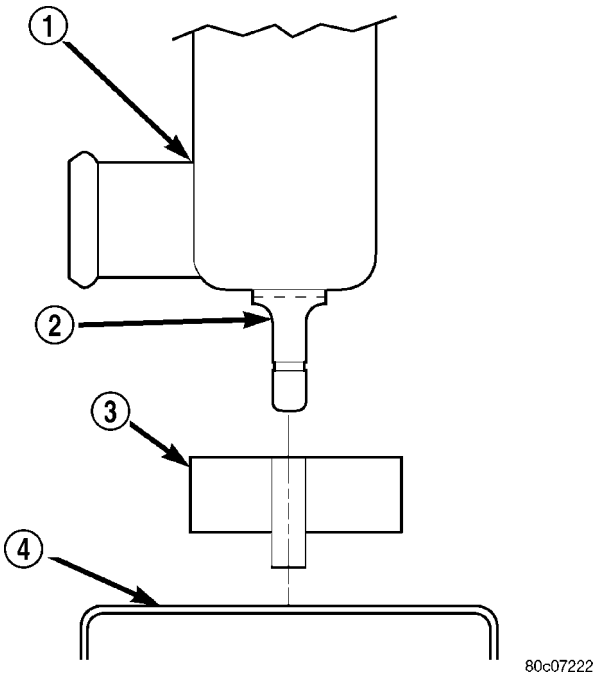

Fig. 17 Radiator Alignment Dowels - Typical

1 - RADIATOR
2 - ALIGNMENT DOWEL
3 - RADIATOR LOWER ISOLATOR
4 - RADIATOR LOWER CROSSMEMBER

NOTE: The radiator and radiator cooling fan can be removed as an assembly. It is not necessary to remove the cooling fan before removing or installing the radiator.

(11) Gently lift up and remove radiator from vehicle. Be careful not to scrape the radiator fins against any other component. Also be careful not to disturb the air conditioning condenser (if equipped).

CLEANING

Clean radiator fins With the engine cold, apply cold water and compressed air to the back (engine side) of the radiator to flush the radiator and/or A/C condenser of debris.

INSPECTION

The radiator cooling fins should be checked for damage or deterioration. Inspect cooling fins to make sure they are not bent or crushed, these areas result in reduced heat exchange causing the cooling system to operate at higher temperatures. Inspect the plastic end tanks for cracks, damage or leaks.

Inspect the radiator neck for damage or distortion.

RADIATOR (Continued)

INSTALLATION

2.4L ENGINE

CAUTION: Before installing the radiator or A/C condenser, be sure the radiator-to-body and radiator-to-A/C condenser rubber air seals are properly fastened to their original positions. These are used at the top, bottom and sides of the radiator and A/C condenser. To prevent overheating, these seals must be installed to their original positions.

(1) Gently lower the radiator and fan shroud into the vehicle. Guide the two radiator alignment dowels into the rubber grommets located in lower radiator crossmember.

(2) Connect the radiator upper and lower hoses and hose clamps to radiator.

CAUTION: The tangs on the hose clamps must be positioned straight down.

(3) Install coolant reserve/overflow tank hose at radiator.

(4) Install both radiator mounting bolts.

(5) Reconnect the electric cooling fan.

(6) Install the grill (Refer to 23 - BODY/EXTERIOR/GRILLE - INSTALLATION).

(7) Reinstall the cooling fan to the engine.

(8) Rotate the fan blades (by hand) and check for interference at fan shroud.

(9) Refill cooling system (Refer to 7 - COOLING - STANDARD PROCEDURE).

(10) Connect battery cable at battery.

(11) Start and warm engine. Check for leaks.

RADIATOR PRESSURE CAP

DESCRIPTION

The cooling system cap is located on the coolant pressure bottle for 3.7L/2.8L Diesel engine and the radiator for the 2.4L engine. The cap construction includes; stainless steel swivel top, rubber seals and retainer, main spring, and a spring loaded valve (Fig. 18).

OPERATION

The pressure cap allows the cooling system to operate at higher than atmospheric pressure which raises the coolant boiling point, thus allowing increased radiator cooling capacity. The pressure cap releases pressure at some point within a range of 110 kPa ± 14 kPa (16 psi ± 2 psi).

A spring-loaded vent valve in the center of the cap allows the system to pressurize and depressurize without creating a vacuum. If the valve is stuck open, coolant will escape to the overflow hose. There is also a gasket in the cap to seal to the top of the filler neck.

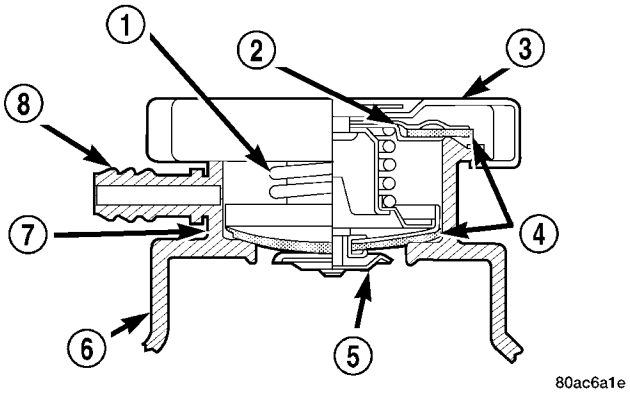

Fig. 18 PRESSURE CAP

1 - MAIN SPRING
2 - GASKET RETAINER
3 - STAINLESS STEEL SWIVEL TOP
4 - RUBBER SEALS
5 - SPRING LOADED VALVE
6 - COOLANT PRESSURE BOTTLE
7 - FILLER NECK
8 - OVERFLOW NIPPLE

CAUTION: Use only the pressure cap specified for this vehicle. Use of other pressure caps can lead to coolant loss and overheating.

DIAGNOSIS AND TESTING

RADIATOR PRESSURE CAP - GAS ENGINES

Remove cap from pressure bottle or radiator as appropriate. Be sure that sealing surfaces are clean. Moisten rubber gasket with water and install the cap on pressure tester (tool 7700 or an equivalent) (Fig. 19).

Operate the tester pump and observe the gauge pointer at its highest point. The cap release pressure should be 124 to 145 kPa (18 to 21 psi). The cap is satisfactory when the pressure holds steady. It is also good if it holds pressure within the 124 to 145 kPa (18 to 21 psi) range for 30 seconds or more. If the pointer drops quickly, replace the cap.

CAUTION: Radiator pressure testing tools are very sensitive to small air leaks, which will not cause cooling system problems. A pressure cap that does not have a history of coolant loss should not be replaced just because it leaks slowly when tested with this tool. Add water to tool. Turn tool upside down and recheck pressure cap to confirm that cap needs replacement.

RADIATOR PRESSURE CAP (Continued)

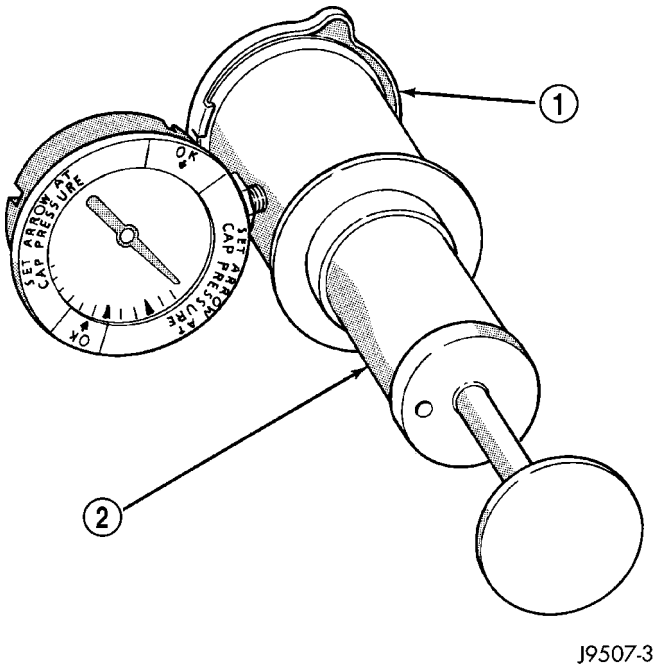

Fig. 19 Pressure Testing Radiator Pressure Cap - Typical

1 - PRESSURE CAP
2 - TYPICAL COOLING SYSTEM PRESSURE TESTER

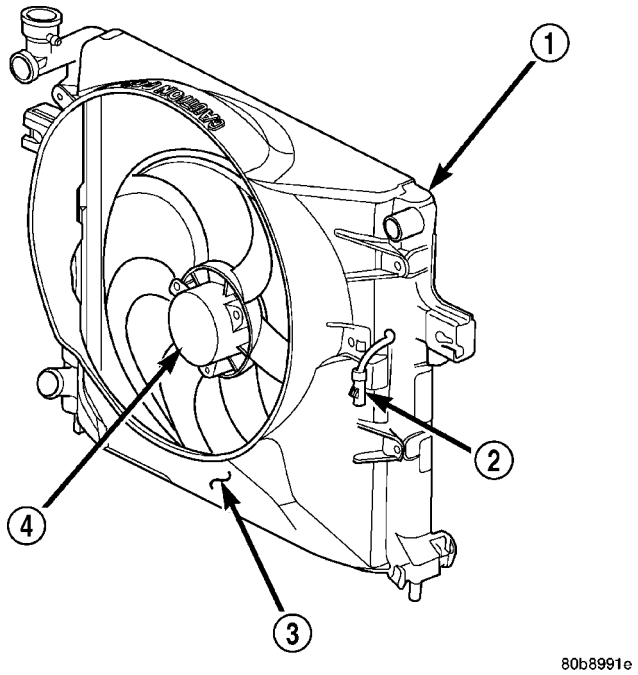

Fig. 20 Radiator Cooling Fan - Typical

1 - RADIATOR
2 - ELECTRIC COOLING FAN CONNECTOR
3 - FAN SHROUD
4 - 2 SPEED ELECTRIC COOLING FAN

CLEANING

Clean the radiator pressure cap using a mild soap and water only.

INSPECTION

Visually inspect the pressure valve gasket on the cap. Replace cap if the gasket is swollen, torn or worn. Inspect the area around radiator filler neck for white deposits that indicate a leaking cap.

RADIATOR FAN - ELECTRIC

DESCRIPTION

The fan (Fig. 20) is electrically controlled by the powertrain control module (PCM) through the fan control relays. The relays are located in the power distribution center (PDC) in the engine compartment.

OPERATION

The electric radiator cooling fan is controlled by the Powertrain Control Module (PCM) through the radiator cooling fan relays. The PCM regulates fan operation based on input from the engine coolant temperature sensor, battery temperature sensor,air conditioning select switch and vehicle speed.

The fan is not energized during engine cranking regardless of the electrical input from the temperature sensors and air conditioning switch. However, if engine operation conditions warrant fan engagement, the fan will run once engine starts.

On vehicles NOT equipped with AC: The relay is energized when the coolant temperature is above 80° C (176° F), or battery temperature sensor above –12° C (10° F). It will then de-energize when coolant temperature drops below 82° C (180° F), or battery temperature sensor below –9° C (16° F).

Vehicles Equipped with AC: In addition to using coolant temperature and battery temperature sensor to control cooling fan operation, the cooling fan will also be engaged when the ,air conditioning system is activated. The relay is also energized when air conditioning is selected and coolant temperature is above 95° C (203° F), or , air conditioning is selected and battery temperature sensor is above 41° C (106° F). It will then de-energize when air conditioning is selected and coolant temperature is below 92° C (198° F), or air conditioning is selected and battery temperature is below 38° C (100° F).

REMOVAL

REMOVAL

If the fan blade is bent, warped, cracked or damaged in any way, it must be replaced **only** with a replacement fan blade. **Do not attempt to repair a damaged fan blade.**

RADIATOR FAN - ELECTRIC (Continued)

NOTE: For 3.7L Heavy Duty/Max Cool/Trailer Tow cooling package, the viscous fan cannot be removed separate from the shroud. Both fan and shroud must be removed together.

(1) Disconnect battery negative cable.

(2) Using special tool 6958 spanner wrench and 8346 adapters, remove the viscous fan from the water pump (Fig. 21).

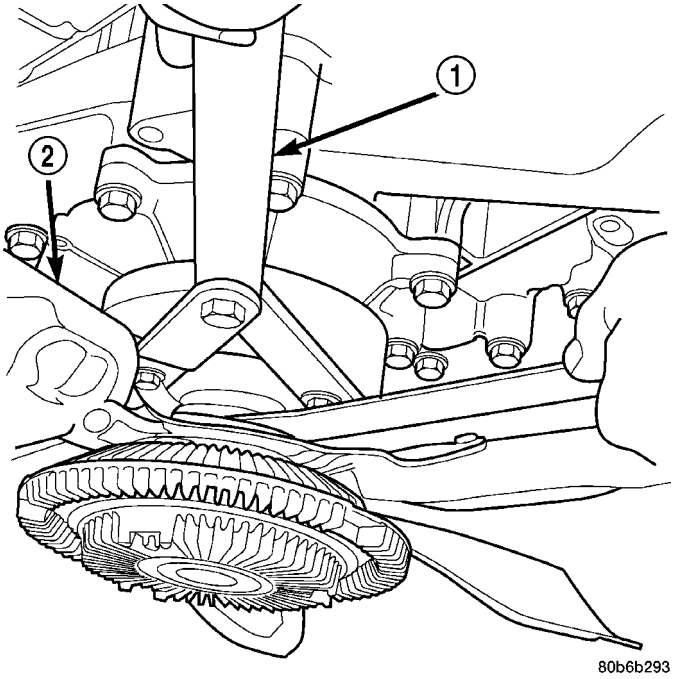

Fig. 21 Viscous Fan and Fan Drive 3.7L

1 - SPECIAL TOOL 6958 SPANNER WRENCH WITH ADAPTER PINS 8346
2 - FAN

(3) Gently lay fan into shroud.

(4) Disconnect the electrical connector for the electric fan, then disconnect connector from shroud.

(5) Remove the two fan shroud mounting bolts connecting the fan shroud to the radiator (Fig. 22).

(6) Remove the shroud and fan from the vehicle.

REMOVAL

(1) Gently lay fan into shroud.

(2) Disconnect the electrical connector for the electric fan, then disconnect connector from shroud.

(3) Remove the two fan shroud mounting bolts connecting the fan shroud to the radiator (Fig. 23).

(4) Remove the shroud and fan from the vehicle.

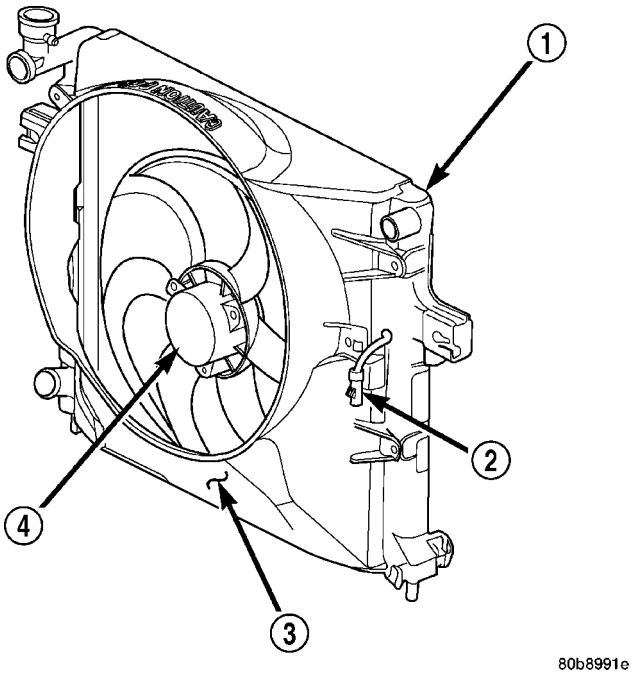

Fig. 22 Radiator Cooling Fan - Typical

1 - RADIATOR
2 - ELECTRIC COOLING FAN CONNECTOR
3 - FAN SHROUD
4 - 2 SPEED ELECTRIC COOLING FAN

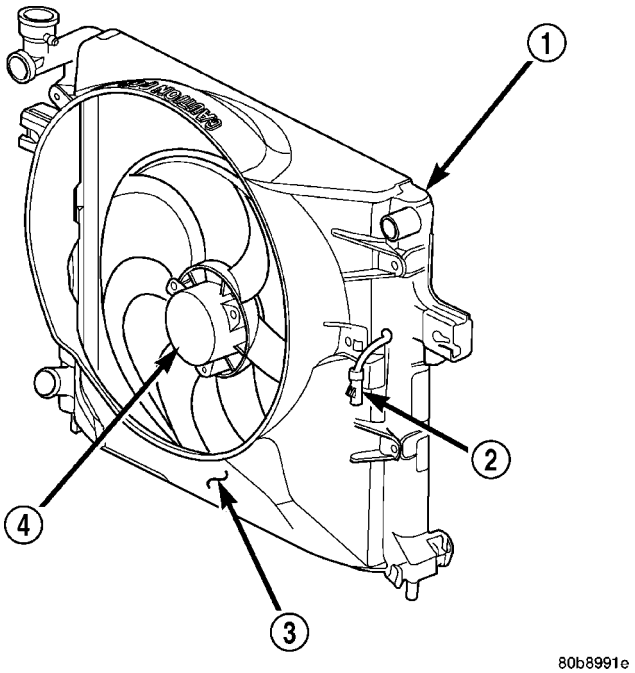

Fig. 23 Radiator Cooling Fan - Typical

1 - RADIATOR
2 - ELECTRIC COOLING FAN CONNECTOR
3 - FAN SHROUD
4 - ELECTRIC COOLING FAN

RADIATOR FAN - ELECTRIC (Continued)

INSTALLATION

INSTALLATION

NOTE: For 3.7L Heavy Duty/Max Cool/Trailer Tow cooling package, the viscous fan cannot be installed separate from the shroud. Both fan and shroud must be installed together.

(1) Gently lay viscous fan into shroud.
(2) Install fan shroud assembly into the vehicle. Tighten fan shroud to radiator bolts to (5.5 N·m (50 in. lbs.).
(3) Using special tool 6958 spanner wrench and 8346 adapters, install the viscous fan on the water pump.
(4) Connect fan motor wire connector to harness connector, and attach connector to shroud.
(5) Connect battery negative cable.
(6) Start engine and check fan operation.

INSTALLATION

(1) Install fan shroud assembly into the vehicle. Tighten fan shroud to radiator bolts to (5.5 N·m (50 in. lbs.).
(2) Connect fan motor wire connector to harness connector, and attach connector to shroud.
(3) Connect battery negative cable.
(4) Start engine and check fan operation.

RADIATOR - FAN - VISCOUS

DESCRIPTION

CAUTION: If the viscous fan drive is replaced because of mechanical damage, the cooling fan blades should also be inspected. Inspect for fatigue cracks, loose blades, or loose rivets that could have resulted from excessive vibration. Replace fan blade assembly if any of these conditions are found. Also inspect water pump bearing and shaft assembly for any related damage due to a viscous fan drive malfunction.

The thermal viscous fan drive (Fig. 24) is a silicone-fluid-filled coupling used to connect the fan blades to the water pump shaft. The coupling allows the fan to be driven in a normal manner. This is done at low engine speeds while limiting the top speed of the fan to a predetermined maximum level at higher engine speeds.

On the 3.7L engine, an electric fan is standard and the viscous fan is added on for trailer tow packages only.

On the 2.8L diesel engine, the viscous is standard.

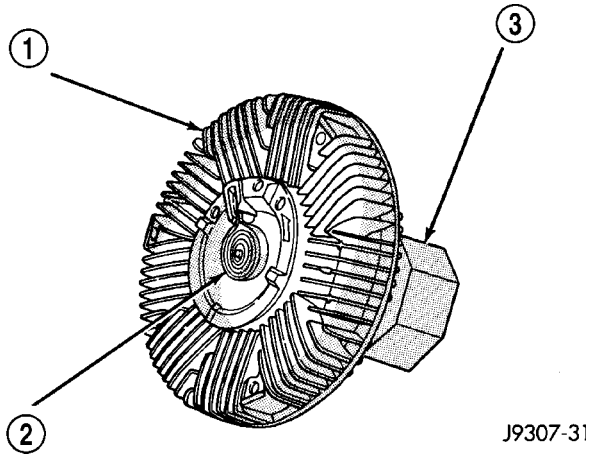

Fig. 24 Viscous Fan Drive - Typical

1 - VISCOUS FAN DRIVE
2 - THERMOSTATIC SPRING
3 - MOUNTING NUT TO WATER PUMP HUB

OPERATION

A thermostatic bimetallic spring coil is located on the front face of the viscous fan drive unit. This spring coil reacts to the temperature of the radiator discharge air. It engages the viscous fan drive for higher fan speed if the air temperature from the radiator rises above a certain point. Until additional engine cooling is necessary, **the fan will remain at a reduced rpm regardless of engine speed. Normally less than 800 rpm.**

Only when sufficient heat is present, will the viscous fan drive engage. This is when the air flowing through the radiator core causes a reaction to the bimetallic coil. It then increases fan speed to provide the necessary additional engine cooling.

Once the engine has cooled, the radiator discharge temperature will drop. The bimetallic coil again reacts and the fan speed is reduced to the previous disengaged speed.

DIAGNOSIS AND TESTING

VISCOUS FAN DRIVE

If the fan assembly free-wheels without drag (the fan blades will revolve more than five turns when spun by hand), replace the fan drive. This spin test must be performed when the engine is cool.

For the following test, the cooling system must be in good condition. It also will ensure against excessively high coolant temperature.

WARNING: BE SURE THAT THERE IS ADEQUATE FAN BLADE CLEARANCE BEFORE DRILLING.

(1) Drill a 3.18-mm (1/8-in) diameter hole in the top center of the fan shroud.

RADIATOR - FAN - VISCOUS (Continued)

(2) Obtain a dial thermometer with an 8 inch stem (or equivalent). It should have a range of -18° to 105°C (0° to 220° F). Insert thermometer through the hole in the shroud. Be sure that there is adequate clearance from the fan blades.

(3) Connect a tachometer and an engine ignition timing light (timing light is to be used as a strobe light).

(4) Block the air flow through the radiator. Secure a sheet of plastic in front of the radiator (or air conditioner condenser). Use tape at the top to secure the plastic and be sure that the air flow is blocked.

(5) Be sure that the air conditioner (if equipped) is turned off.

WARNING: USE EXTREME CAUTION WHEN THE ENGINE IS OPERATING. DO NOT STAND IN A DIRECT LINE WITH THE FAN. DO NOT PUT YOUR HANDS NEAR THE PULLEYS, BELTS OR FAN. DO NOT WEAR LOOSE CLOTHING.

(6) Start the engine and operate at 2400 rpm. Within ten minutes the air temperature (indicated on the dial thermometer) should be up to 93° C (200° F). Fan drive **engagement** should have started to occur at between 91° to 96° C (195° to 205° F). Engagement is distinguishable by a definite **increase** in fan flow noise (roaring). The timing light also will indicate an increase in the speed of the fan.

(7) When the air temperature reaches 93° C (200° F), remove the plastic sheet. Fan drive **disengagement** should have started to occur at between 62° to 85° C (145° to 185° F). A definite **decrease** of fan flow noise (roaring) should be noticed. If not, replace the defective viscous fan drive unit.

REMOVAL

3.7L ENGINE

(1) Disconnect negative battery cable from battery.

NOTE: The thermal viscous fan drive/fan blade assembly is attached (threaded) to water pump hub shaft.

(2) Remove the accessory drive belt (Refer to 7 - COOLING/ACCESSORY DRIVE/DRIVE BELTS - REMOVAL).

(3) Remove fan blade/viscous fan drive assembly from water pump using special tool 6958 spanner wrench and 8346 adapters, by turning mounting nut counterclockwise as viewed from front (Fig. 25). Threads on viscous fan drive are **RIGHT HAND.**

(4) Do not attempt to remove fan/viscous fan drive assembly from vehicle at this time.

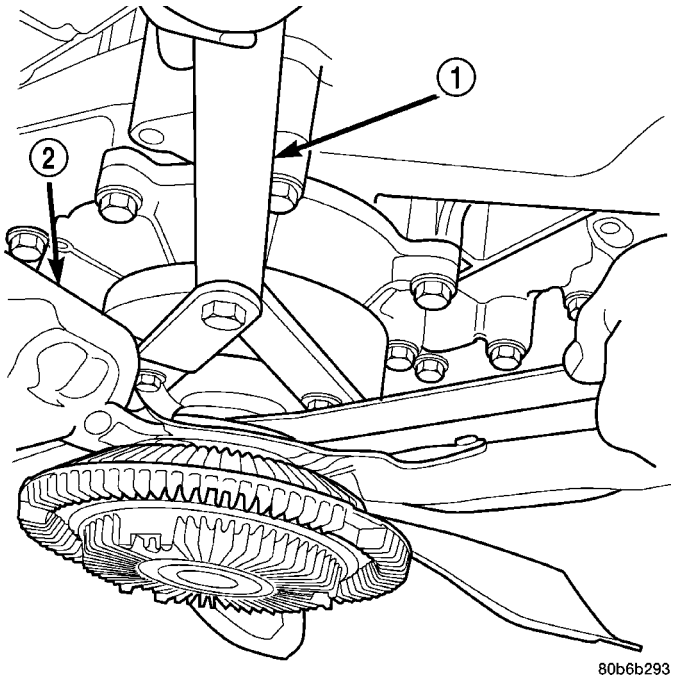

Fig. 25 Viscous Fan and Fan Drive 3.7L

1 - SPECIAL TOOL 6958 SPANNER WRENCH WITH ADAPTER PINS 8346
2 - FAN

(5) Do not unbolt fan blade assembly from viscous fan drive at this time.

(6) Remove fan shroud to radiator bolts.

(7) Remove fan shroud and fan blade/viscous fan drive assembly as a complete unit from vehicle.

(8) After removing fan blade/viscous fan drive assembly, **do not** place viscous fan drive in horizontal position. If stored horizontally, silicone fluid in the viscous fan drive could drain into its bearing assembly and contaminate lubricant.

CAUTION: Do not remove water pump pulley-to-water pump bolts. This pulley is under belt tension.

(9) Remove four bolts securing fan blade assembly to viscous fan drive.

CLEANING

Clean the fan blades using a mild soap and water. Do not use an abrasive to clean the blades.

INSPECTION

WARNING: DO NOT ATTEMPT TO BEND OR STRAIGHTEN FAN BLADES IF FAN IS NOT WITHIN SPECIFICATIONS.

RADIATOR - FAN - VISCOUS (Continued)

CAUTION: If fan blade assembly is replaced because of mechanical damage, water pump and viscous fan drive should also be inspected. These components could have been damaged due to excessive vibration.

(1) Remove fan blade assembly from viscous fan drive unit (four bolts).

(2) Lay fan on a flat surface with leading edge facing down. With tip of blade touching flat surface, replace fan if clearance between opposite blade and surface is greater than 2.0 mm (.090 inch). Rocking motion of opposite blades should not exceed 2.0 mm (.090 inch). Test all blades in this manner.

(3) Inspect fan assembly for cracks, bends, loose rivets or broken welds. Replace fan if any damage is found.

INSTALLATION

3.7L ENGINE

(1) Assemble fan blade to viscous fan drive. Tighten mounting bolts to 23.7 N·m (210 in. lbs.) torque.

NOTE: The viscous fan and fan shroud must be installed as an assembly.

(2) Gently lay viscous fan into fan shroud.

(3) Install the fan shroud to radiator mounting bolts. Tighten bolts to 9 N·m (80 in·lbs).

(4) Thread the fan and fan drive onto the water pump pulley, and tighten nut using special tool 6958 spanner wrench and 8346 adapters.

(5) Install accessory drive belt (Refer to 7 - COOLING/ACCESSORY DRIVE/DRIVE BELTS - INSTALLATION).

CAUTION: When installing a serpentine accessory drive belt, the belt MUST be routed correctly. If not, the engine may overheat due to the water pump rotating in the wrong direction. (Refer to 7 - COOLING/ACCESSORY DRIVE/DRIVE BELTS - REMOVAL) for correct belt routing.

THERMOSTAT HOUSING

REMOVAL

(1) Drain cooling system below thermostat housing level (Refer to 7 - COOLING - STANDARD PROCEDURE).

(2) Remove thermostat (Refer to 7 - COOLING/ENGINE/ENGINE COOLANT THERMOSTAT - REMOVAL).

(3) Disconnect engine coolant temperature sensor.

(4) Disconnect heater supply hose.

(5) Remove housing attaching bolts (Fig. 26).

(6) Remove housing and gasket (Fig. 26).

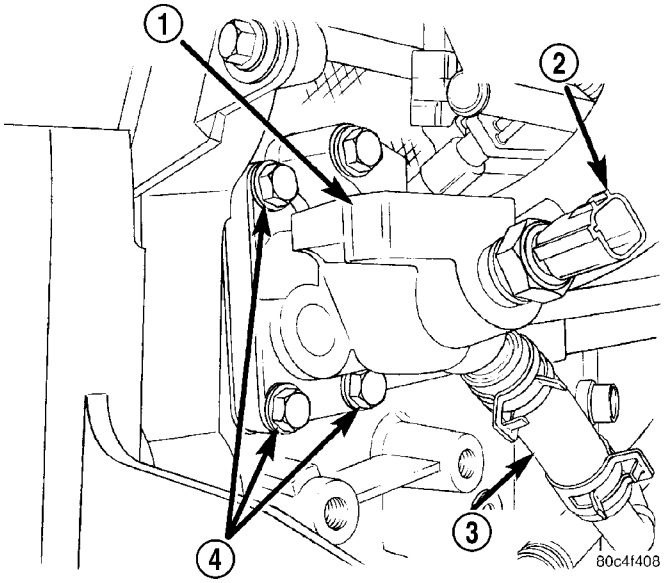

Fig. 26 Thermostat Housing

1 - THERMOSTAT HOUSING
2 - COOLANT TEMPERATURE SENSOR
3 - HOSE-HEATER SUPPLY
4 - BOLTS

INSTALLATION

(1) Clean all gasket sealing surfaces.

(2) Install gasket and housing (Fig. 26). Tighten bolts to 28 N·m (20 ft. lbs.).

(3) Connect engine coolant temperature sensor.

(4) Install thermostat (Refer to 7 - COOLING/ENGINE/ENGINE COOLANT THERMOSTAT - INSTALLATION).

(5) Fill cooling system (Refer to 7 - COOLING - STANDARD PROCEDURE).

WATER PUMP

DESCRIPTION

3.7L ENGINE

A centrifugal water pump circulates coolant through the water jackets, passages, intake manifold, radiator core, cooling system hoses and heater core. The pump is driven from the engine crankshaft by a single serpentine drive belt.

The water pump impeller is pressed onto the rear of a shaft that rotates in bearings pressed into the housing. The housing has two small holes to allow seepage to escape. The water pump seals are lubri-

WATER PUMP (Continued)

cated by the antifreeze in the coolant mixture. No additional lubrication is necessary.

Both heater hoses are connected to fittings on the timing chain front cover. The water pump is also mounted directly to the timing chain cover and is equipped with a non serviceable integral pulley (Fig. 27).

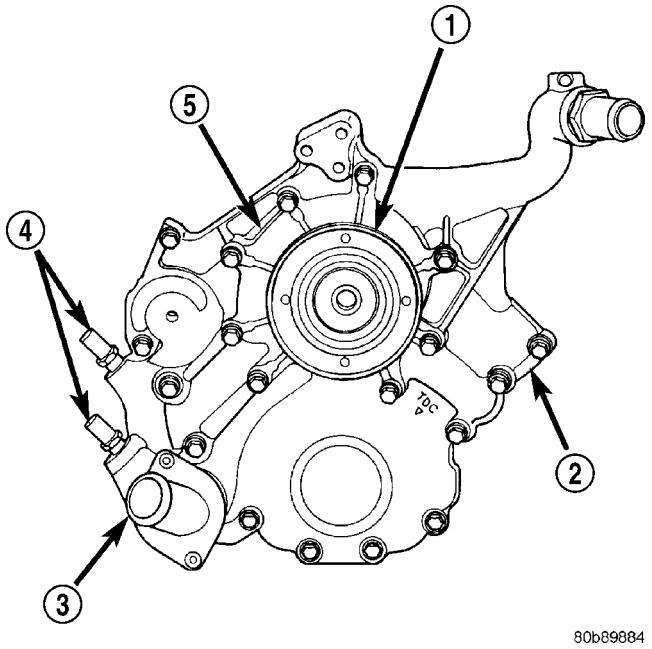

Fig. 27 Water Pump and Timing Chain Cover

1 - INTEGRAL WATER PUMP PULLEY
2 - TIMING CHAIN COVER
3 - THERMOSTAT HOUSING
4 - HEATER HOSE FITTINGS
5 - WATER PUMP

2.4L ENGINE

The water pump has a cast aluminum body and housing with a stamped steel impeller. The water pump bolts directly to the block (Fig. 28). The cylinder block to water pump seal is provided by a rubber O-ring. The water pump is driven by the engine timing belt.

DESCRIPTION - WATER PUMP BYPASS - 3.7L

The 3.7L engine uses an internal water/coolant bypass system. The design uses galleries in the timing chain cover to circulate coolant during engine warm-up preventing the coolant from flowing through the radiator. The thermostat uses a stub shaft located at the rear of the thermostat to control flow through the bypass gallery.

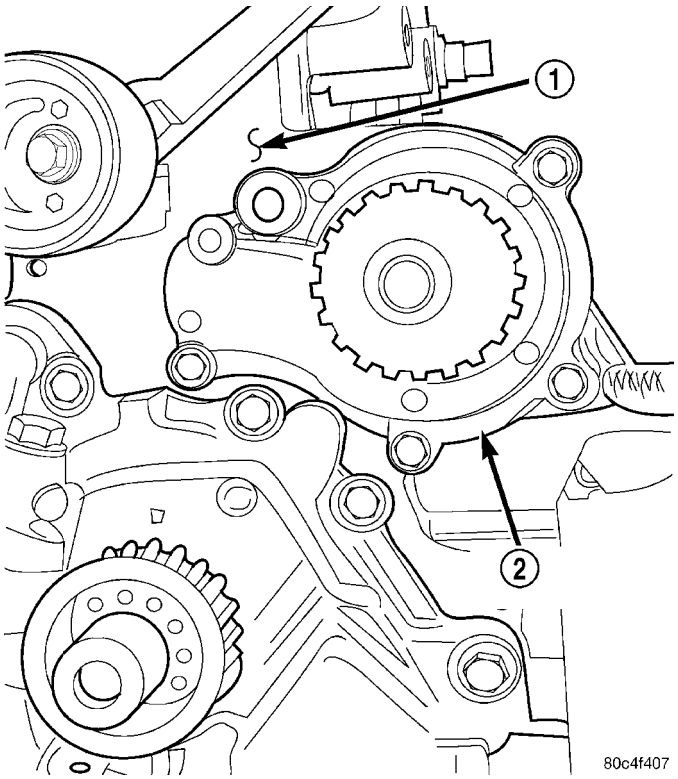

Fig. 28 Water Pump

1 - CYLINDER BLOCK
2 - WATER PUMP

OPERATION

2.4L/3.7L ENGINES

A centrifugal water pump circulates coolant through the water jackets, passages, intake manifold, radiator core, cooling system hoses and heater core, this coolant absorbs the heat generated when the engine is running. The pump is driven by the engine crankshaft via a drive belt.

REMOVAL

2.4L ENGINE

(1) Disconnect negative cable from battery.
(2) Raise vehicle on a hoist.
(3) Remove the accessory drive belts (Refer to 7 - COOLING/ACCESSORY DRIVE/DRIVE BELTS - REMOVAL).
(4) Remove the belt tensioner.
(5) Drain the cooling system (Refer to 7 - COOLING - STANDARD PROCEDURE).
(6) Remove the generator.
(7) Remove the power steering pump.
(8) Remove the A/C compressor.
(9) Remove the accessory drive bracket.

WATER PUMP (Continued)

(10) Remove the timing belt (Refer to 9 - ENGINE/VALVE TIMING/TIMING BELT AND SPROCKET(S) - REMOVAL).

(11) Remove timing belt idler pulley.

(12) Hold camshaft sprocket with Special tool C-4687 and adaptor C-4687-1 while removing bolt. Remove both cam sprockets.

(13) Remove the timing belt rear cover (Refer to 9 - ENGINE/VALVE TIMING/TIMING BELT COVER(S) - REMOVAL).

(14) Remove water pump to engine attaching screws (Fig. 29).

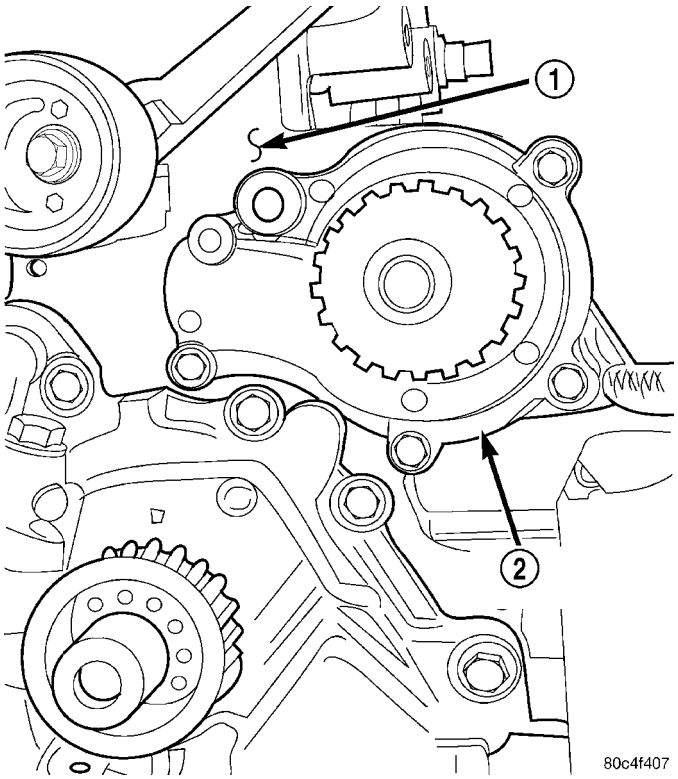

Fig. 29 Water Pump - 2.4L

1 - CYLINDER BLOCK
2 - WATER PUMP

3.7L

The water pump on 3.7L engines is bolted directly to the engine timing chain case cover.

(1) Disconnect negative battery cable from battery.

(2) Drain cooling system (Refer to 7 - COOLING - STANDARD PROCEDURE).

(3) Remove fan/viscous fan drive assembly from water pump (Fig. 30) (Refer to 7 - COOLING/ENGINE/FAN DRIVE VISCOUS CLUTCH - REMOVAL). Do not attempt to remove fan/viscous fan drive assembly from vehicle at this time.

WARNING: CONSTANT TENSION HOSE CLAMPS ARE USED ON MOST COOLING SYSTEM HOSES. WHEN REMOVING OR INSTALLING, USE ONLY TOOLS DESIGNED FOR SERVICING THIS TYPE OF CLAMP, SUCH AS SPECIAL CLAMP TOOL NUMBER 6094. ALWAYS WEAR SAFETY GLASSES WHEN SERVICING CONSTANT TENSION CLAMPS.

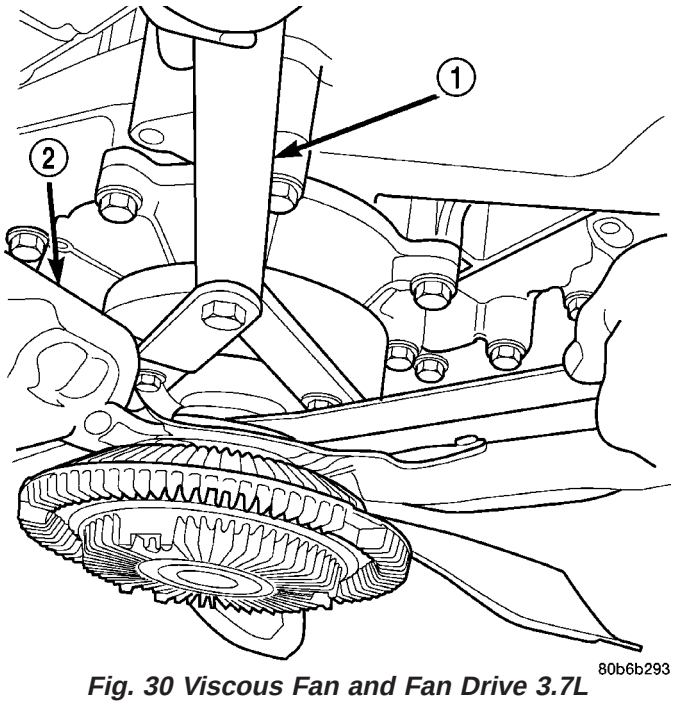

Fig. 30 Viscous Fan and Fan Drive 3.7L

1 - SPECIAL TOOL 6958 SPANNER WRENCH WITH ADAPTER PINS 8346
2 - FAN

CAUTION: A number or letter is stamped into the tongue of constant tension clamps. If replacement is necessary, use only an original equipment clamp with matching number or letter.

(4) If water pump is being replaced, do not unbolt fan blade assembly from thermal viscous fan drive.

(5) Remove two fan shroud-to-radiator screws, Disconnect the coolant overflow hose.

(6) Remove upper fan shroud and fan blade/viscous fan drive assembly from vehicle.

(7) After removing fan blade/viscous fan drive assembly, **do not** place thermal viscous fan drive in horizontal position. If stored horizontally, silicone fluid in viscous fan drive could drain into its bearing assembly and contaminate lubricant.

(8) Remove accessory drive belt (Fig. 31) (Refer to 7 - COOLING/ACCESSORY DRIVE/DRIVE BELTS - REMOVAL).

(9) Remove lower radiator hose clamp and remove lower hose at water pump.

(10) Remove seven water pump mounting bolts and one stud bolt.

CAUTION: Do not pry water pump at timing chain case/cover. The machined surfaces may be damaged resulting in leaks.

WATER PUMP (Continued)

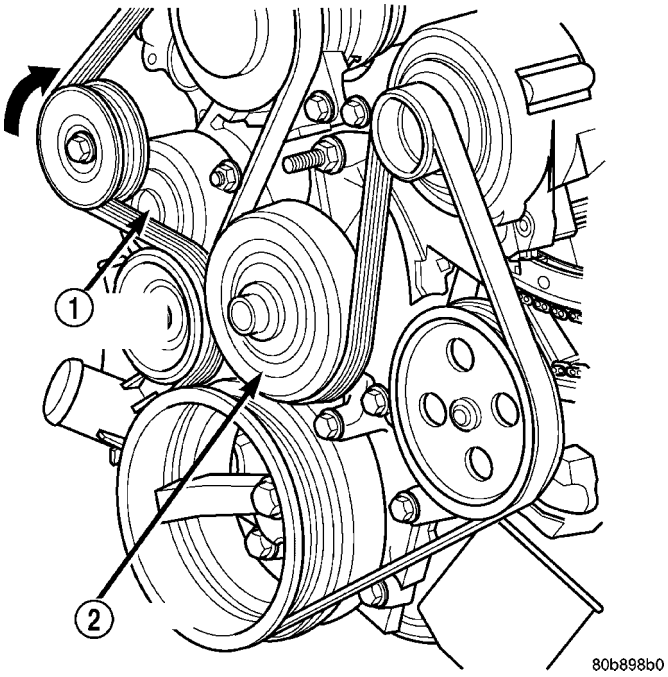

Fig. 31 Automatic Belt Tensioner—3.7L

1 - AUTOMATIC TENSIONER
2 - WATER PUMP PULLEY

(11) Remove water pump and gasket. Discard gasket.

CLEANING

Clean the gasket mating surface. Use caution not to damage the gasket sealing surface.

INSPECTION

Inspect the water pump assembly for cracks in the housing, Water leaks from shaft seal, Loose or rough turning bearing or Impeller rubbing either the pump body or timing chain case/cover.

INSTALLATION

2.4L ENGINE

(1) Install new O-ring gasket in water pump body O-ring locating groove (Fig. 32).

CAUTION: Make sure O-ring is properly seated in water pump groove before tightening screws. An improperly located O-ring may be damaged and cause a coolant leak.

(2) Assemble pump body to block and tighten screws to 12 N·m (105 in. lbs.). Pressurize cooling system to 103.4 Kpa (15 psi) with pressure tester and check water pump shaft seal and O-ring for leaks.

(3) Rotate pump by hand to check for freedom of movement.

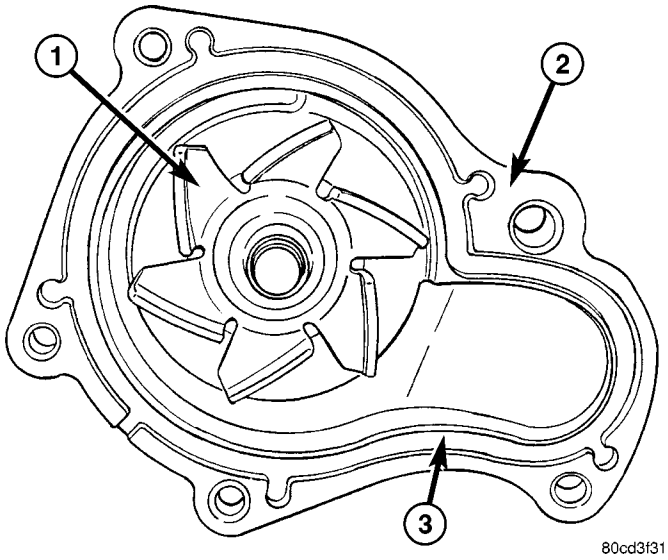

Fig. 32 Water Pump Body

1 - IMPELLER
2 - WATER PUMP BODY
3 - O-RING LOCATING GROOVE

(4) Install the timing belt rear cover (Refer to 9 - ENGINE/VALVE TIMING/TIMING BELT COVER(S) - INSTALLATION).

(5) Install camshaft sprockets and target ring. Torque bolts to 101 N·m (75 ft. lbs.) while holding camshaft sprocket with Special tool C-4687 and adaptor C-4687-1.

(6) Install timing belt idler pulley and torque mounting bolt to 61 N·m (45 ft. lbs.).

(7) Install the timing belt (Refer to 9 - ENGINE/ VALVE TIMING/TIMING BELT AND SPROCKET(S) - INSTALLATION).

(8) Install the accessory drive mounting bracket (Fig. 33).

(9) Install the power steering pump.

(10) Install the generator.

(11) Install the A/C compressor.

(12) Install the belt tensioner.

(13) Install the accessory drive belts (Refer to 7 - COOLING/ACCESSORY DRIVE/DRIVE BELTS - INSTALLATION).

(14) Fill the cooling system (Refer to 7 - COOLING - STANDARD PROCEDURE).

(15) Lower vehicle and connect battery cable.

3.7L ENGINE

The water pump on 3.7L engines is bolted directly to the engine timing chain case cover.

(1) Clean gasket mating surfaces.

(2) Using a new gasket, position water pump and install mounting bolts as shown. (Fig. 34). Tighten water pump mounting bolts to 54 N·m (40 ft. lbs.) torque.

WATER PUMP (Continued)

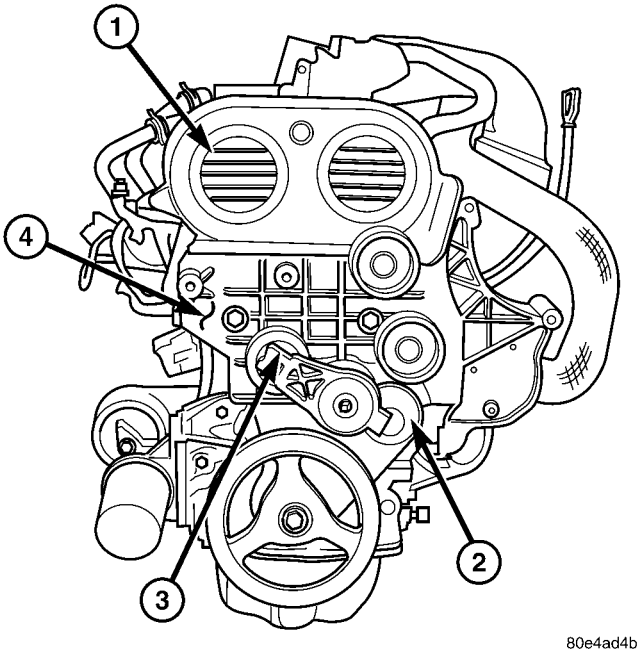

Fig. 33 ACCESSORY DRIVE BRACKET

1- UPPER TIMING BELT COVER
2- LOWER TIMING BELT COVER
3- BELT TENSIONER
4- ACCESSORY DRIVE BRACKET

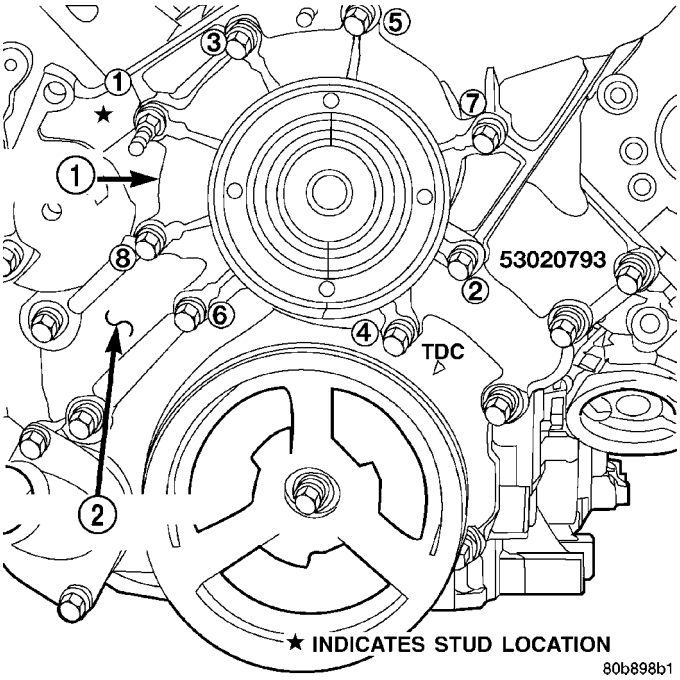

Fig. 34 Water Pump Installation—3.7L

1 - WATER PUMP
2 - TIMING CHAIN COVER

(3) Spin water pump to be sure that pump impeller does not rub against timing chain case/cover.

(4) Connect radiator lower hose to water pump.

(5) Relax tension from belt tensioner. Install drive belt (Refer to 7 - COOLING/ACCESSORY DRIVE/ DRIVE BELTS - INSTALLATION).

CAUTION: When installing the serpentine accessory drive belt, belt must be routed correctly. If not, engine may overheat due to water pump rotating in wrong direction. Refer to (Fig. 35) for correct belt routing. Or, refer to the Belt Routing Label located in the engine compartment. The correct belt with correct length must be used.

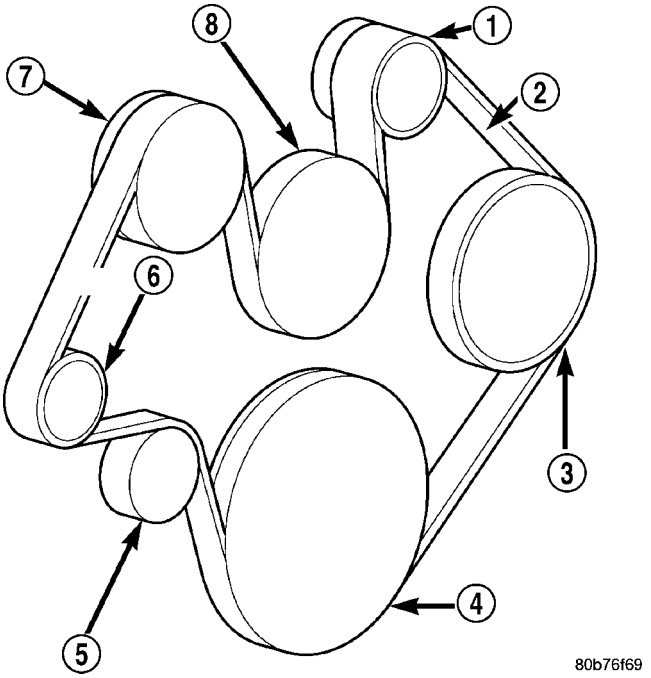

Fig. 35 Belt Routing 3.7L

1 - GENERATOR PULLEY
2 - ACCESSORY DRIVE BELT
3 - POWER STEERING PUMP PULLEY
4 - CRANKSHAFT PULLEY
5 - IDLER PULLEY
6 - TENSIONER
7 - A/C COMPRESSOR PULLEY
8 - WATER PUMP PULLEY

(6) Position upper fan shroud and fan blade/viscous fan drive assembly.

(7) Be sure the upper and lower portions of the fan shroud are firmly connected. All air must flow through the radiator.

(8) Install two fan shroud-to-radiator screws.

(9) Be sure of at least 25 mm (1.0 inches) between tips of fan blades and fan shroud.

(10) Install fan blade/viscous fan drive assembly to water pump shaft (Refer to 7 - COOLING/ENGINE/ FAN DRIVE VISCOUS CLUTCH - INSTALLATION).

(11) Fill cooling system (Refer to 7 - COOLING - STANDARD PROCEDURE).

(12) Connect negative battery cable.

(13) Start and warm the engine. Check for leaks.

TRANSMISSION

TABLE OF CONTENTS

	page
TRANSMISSION	
STANDARD PROCEDURE - TRANSMISSION COOLER LINE QUICK CONNECT FITTING DISASSEMBLY/ASSEMBLY	45
TRANS COOLER	
DESCRIPTION	46
REMOVAL	46
INSTALLATION	46

TRANSMISSION

STANDARD PROCEDURE - TRANSMISSION COOLER LINE QUICK CONNECT FITTING DISASSEMBLY/ASSEMBLY

DISCONNECT

(1) Remove dust cap by pulling it straight back off of quick connect fitting. (Fig. 1)

(2) Place disconnect tool Special Tool 8875A onto transmission cooler line with the fingers of the tool facing the quick connect fitting.

(3) Slide disconnect tool down the transmission line and engage the fingers of the tool into the retaining clip. When properly engaged in the clip, the tool will fit flush against the quick connect fitting.

(4) Rotate the disconnect tool 60° to expand the retaining clip.

(5) While holding the disconnect tool against the quick connect fitting, pull back on the transmission cooler line to remove.

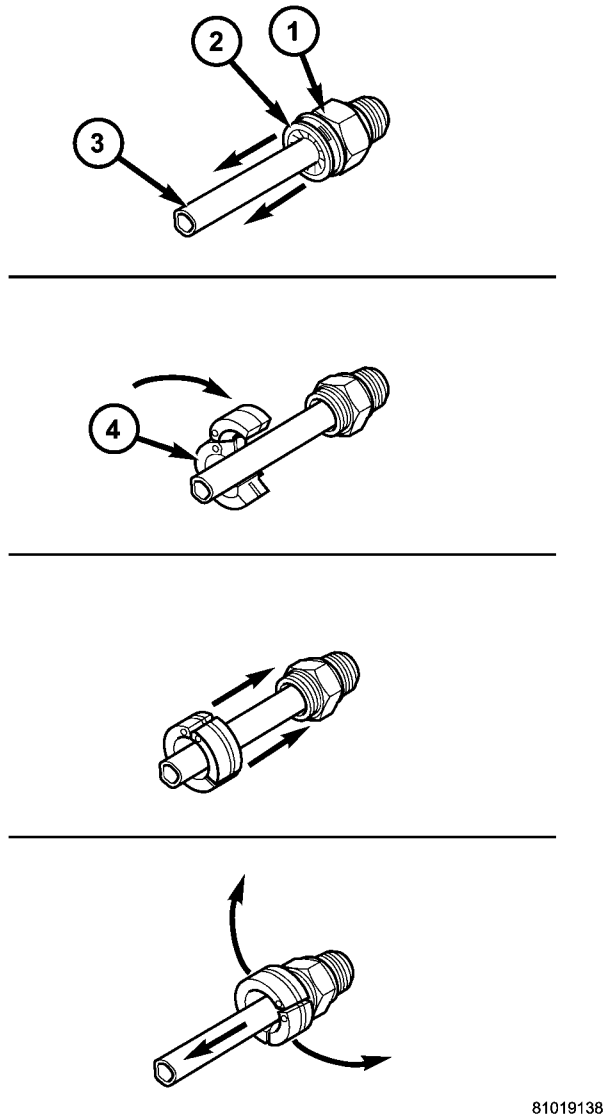

Fig. 1 Oil Cooler Line Quick Connect Fitting - Disassembly

1 - QUICK CONNECT FITTING
2 - DUST CAP
3 - OIL COOLER LINE
4 - SPECIAL TOOL 8875A

TRANSMISSION (Continued)

CONNECT

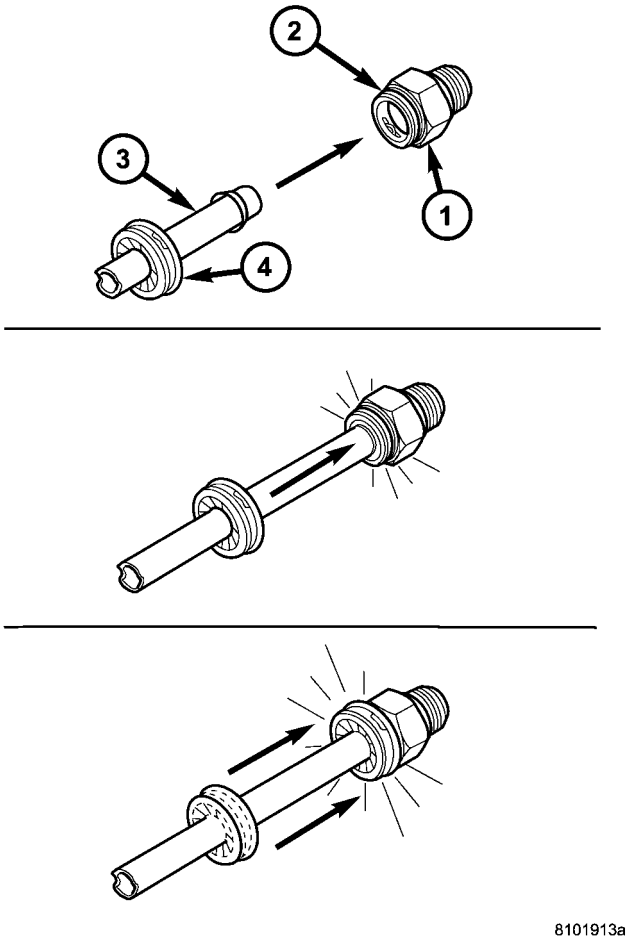

Fig. 2 Oil Cooler Line Quick Connect Fitting - Assembly

1 - QUICK CONNECT FITTING
2 - CLIP
3 - OIL COOLER LINE
4 - DUST CAP

(1) Align transmission cooler line with quick connect fitting while pushing straight into the fitting.

(2) Push in on transmission cooler line until a “click” is heard or felt (Fig. 2).

(3) Slide dust cap down the transmission cooler line and snap it over the quick connect fitting until it is fully seated and rotates freely (Fig. 2). Dust cap will only snap over quick connect fitting when the transmission cooler line is properly installed.

NOTE: If dust cap will not snap into place, repeat assembly step #2.

TRANS COOLER

DESCRIPTION

The automatic transmission cooler is located in the front of the condenser and behind the front fascia. The transmission cooler is a heat exchanger that allows heat in the transmission fluid to be transferred to the air passing over the cooler fins.

The transmission oil cooler for the 2.8L Diesel with automatic transmission integrated into the A/C condenser.

The Transmission oil cooler assembly is equipped with quick connect fitting for the transmission oil cooler lines.

REMOVAL

(1) Remove electric cooling fan (Refer to 7 - COOLING/ENGINE/RADIATOR FAN - REMOVAL).

(2) Position cooling fan out of the way.

(3) Using Tool 8875A, disconnect transmission cooler tube from the transmission cooler (Refer to 7 - COOLING/TRANSMISSION - STANDARD PROCEDURE).

(4) Remove the transmission cooler mounting bolts.

(5) Remove transmission cooler from vehicle.

INSTALLATION

(1) Position transmission cooler in vehicle.

(2) Install transmission mounting bolts. Tighten to 14 N·m (123 in. lbs.)

(3) Install transmission cooler lines into cooler (Refer to 7 - COOLING/TRANSMISSION - STANDARD PROCEDURE).

(4) Install electric cooling fan (Refer to 7 - COOLING/ENGINE/RADIATOR FAN - INSTALLATION).

AUDIO/VIDEO

TABLE OF CONTENTS

page

AUDIO/VIDEO
DESCRIPTION 1
OPERATION 2
DIAGNOSIS AND TESTING - AUDIO 2
AMPLIFIER CHOKE AND RELAY
DESCRIPTION 4
OPERATION 4
DIAGNOSIS AND TESTING - AMPLIFIER CHOKE AND RELAY 4
REMOVAL 4
INSTALLATION 5
ANTENNA BODY & CABLE
DESCRIPTION 5
OPERATION 5
DIAGNOSIS AND TESTING - ANTENNA BODY AND CABLE 5
REMOVAL 7
INSTALLATION 7
ANTENNA CABLE - SATELLITE RADIO
REMOVAL 8
INSTALLATION 9
ANTENNA MODULE
DESCRIPTION 9
OPERATION 9
DIAGNOSIS AND TESTING ANTENNA MODULE 9
REMOVAL 10
INSTALLATION 10
ANTENNA-SATELLITE RADIO
DESCRIPTION 10
OPERATION 10
REMOVAL 10
INSTALLATION 10
CD CHANGER
DESCRIPTION 11
OPERATION 11
REMOVAL 11
INSTALLATION 11
INSTRUMENT PANEL ANTENNA CABLE
REMOVAL 11
INSTALLATION 13
QUARTER GLASS INTEGRAL ANTENNA
DESCRIPTION 13
OPERATION 13
DIAGNOSIS AND TESTING - QUARTER GLASS INTEGRAL ANTENNA 13
RADIO
DESCRIPTION 14
OPERATION 17
REMOVAL 17
INSTALLATION 17
RADIO NOISE SUPPRESSION COMPONENTS
DESCRIPTION 17
OPERATION 18
REMOVAL 18
INSTALLATION 19
RECEIVER-SATELLITE
DESCRIPTION 20
OPERATION 20
REMOVAL 20
INSTALLATION 20
REMOTE SWITCHES
DESCRIPTION 20
OPERATION 21
DIAGNOSIS AND TESTING - REMOTE SWITCHES 21
REMOVAL 22
INSTALLATION 22
SPEAKER
DESCRIPTION 22
OPERATION 22
DIAGNOSIS AND TESTING - SPEAKER 23
REMOVAL 23
INSTALLATION 24

AUDIO/VIDEO

DESCRIPTION

Several combinations of radio receivers and speaker systems are offered on this model. The audio system uses an ignition switched source of battery current so that the system will only operate when the ignition switch is in the RUN or ACCESSORY positions.

The audio system includes the following components:

- Amplifier choke and relay (with premium speaker system only)
- Antenna
- Compact disc changer (if equipped)
- Power amplifier mounted to each front door speaker (with premium speaker system only)
- Radio noise suppression components
- Radio receiver
- Remote radio switches (if equipped)

AUDIO/VIDEO (Continued)

- Speakers

Certain functions and features of the audio system rely upon resources shared with other electronic modules in the vehicle over the Programmable Communication Interface (PCI) bus network. The data bus network allows the sharing of sensor information. For diagnosis of these electronic modules or of the data bus network, the use of a DRB III® scan tool and the proper Diagnostic Procedures manual are recommended.

OPERATION

The audio system components are designed to provide audio entertainment and information through the reception, tuning and amplification of locally broadcast radio signals in both the Amplitude Modulating (AM) and Frequency Modulating (FM) commercial frequency ranges.

The audio system components operate on battery current received through a fuse in the Junction Block (JB) on a fused ignition switch output (run-acc) circuit so that the system will only operate when the ignition switch is in the Run or Accessory positions.

On vehicles that are equipped with the optional remote radio switches, the Body Control Module (BCM) receives hard wired resistor multiplexed inputs from the remote radio switches. The programming in the BCM allows it to process those inputs and send the proper messages to the radio receiver over the Programmable Communication Interface (PCI) bus network to control the radio volume up or down, station seek up or down, preset station advance, and mode advance functions.

Refer to the owner's manual for more information on the features, use and operation of each of the available audio systems.

DIAGNOSIS AND TESTING - AUDIO

Any diagnosis of the Audio system should begin with the use of scan tool. For information on the use of the scan tool, refer to the appropriate Diagnostic information.

Refer to the appropriate wiring information.

WARNING: DISABLE THE AIRBAG SYSTEM BEFORE ATTEMPTING ANY STEERING WHEEL, STEERING COLUMN, SEAT BELT TENSIONER, SIDE AIRBAG, OR INSTRUMENT PANEL COMPONENT DIAGNOSIS OR SERVICE. DISCONNECT AND ISOLATE THE BATTERY NEGATIVE (GROUND) CABLE, THEN WAIT TWO MINUTES FOR THE AIRBAG SYSTEM CAPACITOR TO DISCHARGE BEFORE PERFORMING FURTHER DIAGNOSIS OR SERVICE. THIS IS THE ONLY SURE WAY TO DISABLE THE AIRBAG SYSTEM. FAILURE TO TAKE THE PROPER PRECAUTIONS COULD RESULT IN ACCIDENTAL AIRBAG DEPLOYMENT AND POSSIBLE PERSONAL INJURY.

AUDIO SYSTEM DIAGNOSIS TABLE

CONDITION	POSSIBLE CAUSES	CORRECTION
NO AUDIO	1. Fuse faulty.	1. Check radio fuse and Ignition-Off Draw (IOD) fuse in Junction Block (JB). Replace fuses, if required.
	2. Radio connector faulty.	2. Check for loose or corroded radio connector. Repair, if required.
	3. Wiring faulty.	3. Check for shorted or open wires. Repair wiring, if required.
	4. Radio ground faulty.	4. Check for continuity between radio chassis and a known good ground. There should be continuity. Repair ground, if required.
	5. Radio faulty.	5. Refer to appropriate Diagnostic Service Manual.
	6. Speakers faulty.	6. Replace speaker as necessary.
	7. Choke and relay faulty	7. Replace choke and relay as necessary.
NO RADIO DISPLAY	1. Fuse faulty.	1. Check radio fuse and Ignition-Off Draw (IOD) fuse in Junction Block (JB). Replace fuses, if required.
	2. Radio connector faulty.	2. Check for loose or corroded radio connector. Repair, if required.

AUDIO/VIDEO (Continued)

CONDITION	POSSIBLE CAUSES	CORRECTION
	3. Wiring faulty.	3. Check for battery voltage at radio connector. Repair wiring, if required.
	4. Radio ground faulty.	4. Check for continuity between radio chassis and a known good ground. There should be continuity. Repair ground, if required.
	5. Radio faulty.	5. Refer to appropriate Diagnostic Service Manual.
CLOCK WILL NOT KEEP SET TIME	1. Fuse faulty.	1. Check Ignition-Off Draw (IOD) fuse in the Junction Block (JB). Replace fuse, if required.
	2. Radio connector faulty.	2. Check for loose or corroded radio connector. Repair, if required.
	3. Wiring faulty.	3. Check for battery voltage at radio connector. Repair wiring, if required.
	4. Radio ground faulty.	4. Check for continuity between radio chassis and a known good ground. There should be continuity. Repair ground, if required.
	5. Radio faulty.	5. Refer to appropriate Diagnostic Service Manual.
POOR RADIO RECEPTION	1. Antenna faulty.	1. (Refer to 8 - ELECTRICAL/AUDIO/ANTENNA BODY & CABLE - DIAGNOSIS AND TESTING).
	2. Radio ground faulty.	2. Check for continuity between radio chassis and a known good ground. There should be continuity. Repair ground, if required.
	3. Radio noise suppression faulty.	3. Repair or replace ground strap as necessary.
	4. Radio faulty.	4. Refer to appropriate Diagnostic Service Manual.
SOUND DISTORTION (VIBRATION FROM SPEAKER AREA, BUZZING - HUMMING)	1. Door trim panel loose or missing fasteners.	1. Inspect door trim panel and correct as necessary. Replace any missing fasteners.
	2. Water shield loose or misaligned.	2. Inspect water shield and adjust as required.
	3. Items placed in door trim panel map pockets vibrating or moving from side to side.	3. Remove items from door trim panel. Ensure that vibration is no longer present.
NO/POOR TAPE OPERATION	1. Faulty tape.	1. Insert known good tape and test operation.
	2. Foreign objects behind tape door.	2. Remove foreign objects and test operation.
	3. Dirty cassette tape head.	3. Clean head with Mopar Cassette Head Cleaner.
	4. Faulty tape deck.	4. Exchange or replace radio, if required.
NO COMPACT DISC OPERATION	1. Faulty CD.	1. Insert known good CD and test operation.
	2. Foreign material on CD.	2. Clean CD and test operation.
	3. Condensation on CD or optics.	3. Allow temperature of vehicle interior to stabilize and test operation.
	4. Faulty CD player.	4. Refer to appropriate Diagnostic Service Manual.

AMPLIFIER CHOKE AND RELAY

DESCRIPTION

Vehicles equipped with the premium speaker package have a amplifier choke and relay. The amplifier choke and relay is mounted to the lower instrument panel above the pedals and towards the instrument panel center stack.

The amplifier choke and relay should be checked if there is no sound output from the speakers. The amplifier choke and relay can not be repaired or adjusted and, if faulty or damaged, the unit must be replaced.

OPERATION

The amplifier choke and relay is used to control the supply of fused battery current to the front door speaker-mounted dual amplifiers. The speaker relay is energized by a fused 12 volt output from the radio receiver whenever the radio is turned on. For complete circuit diagrams, refer to the appropriate wiring information. The wiring information includes wiring diagrams, proper wire and connector repair procedures, details of wire harness routing and retention, connector pin-out information and location views for the various wire harness connectors, splices and grounds.

DIAGNOSIS AND TESTING - AMPLIFIER CHOKE AND RELAY

Any diagnosis of the Audio system should begin with the use of scan tool. For information on the use of the scan tool, refer to the appropriate Diagnostic information.

The amplifier choke and relay is used to switch power to the individual speaker amplifiers used with the premium speaker package. The amplifier choke and relay is serviced only as a unit. If all of the speakers are inoperative the amplifier choke and relay should be inspected. Before replacement, make the following inspections of the amplifier choke and relay circuits. For complete circuit diagrams, refer to the appropriate wiring information. The wiring information includes wiring diagrams, proper wire and connector repair procedures, details of wire harness routing and retention, connector pin-out information and location views for the various wire harness connectors, splices and grounds.

(1) Check the fused B(+) fuse in the junction block. If OK, go to Step 2. If not OK, replace the faulty fuse.

(2) Check for battery voltage at the fused B(+) fuse in the junction block. If OK, go to Step 3. If not OK, repair the open fused B(+) circuit to the battery as required.

(3) Disconnect the instrument panel wire harness connector from the amplifier choke and relay. Check for battery voltage at the fused B(+) circuit cavity of the instrument panel wire harness connector for the amplifier choke and relay. If OK, go to Step 4. If not OK, repair the open fused B(+) circuit to the junction block fuse as required.

(4) Probe the ground circuit cavity of the instrument panel wire harness connector for the amplifier choke and relay. Check for continuity to a good ground. There should be continuity. If OK, go to Step 5. If not OK, repair the open ground circuit to ground as required.

(5) Turn the ignition switch to the RUN position and turn the radio ON. Check for battery voltage at the radio 12-volt output circuit cavity of the instrument panel wire harness connector for the amplifier choke and relay. If OK, go to Step 6. If not OK, repair the open radio 12-volt output circuit to the radio as required.

(6) Turn the radio and ignition switches to the OFF position. Reconnect the instrument panel wire harness connector to the amplifier choke and relay. Check for battery voltage at the amplified speaker (+) circuit cavity of the instrument panel wire harness connector for the amplifier choke and relay. There should be zero volts. Turn the ignition and radio switches to the ON position. There should now be battery voltage. If OK, repair the open amplified speaker (+) circuits to the speaker-mounted amplifiers as required. If not OK, replace the faulty amplifier choke and relay.

REMOVAL

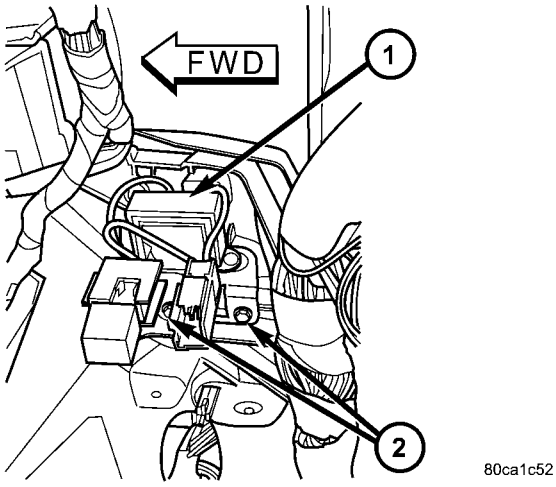

Fig. 1 AMPLIFIER CHOKE AND RELAY

(1) Disconnect and isolate the battery negative cable.

(2) Remove knee blocker cover and knee blocker.

AMPLIFIER CHOKE AND RELAY (Continued)

(3) Disconnect the electrical harness connector from the amplifier choke and relay (Fig. 1).

(4) Remove mounting fasteners and amplifier choke and relay (1).

INSTALLATION

(1) Install the amplifier choke and relay.
(2) Install the mounting fasteners.
(3) Connect the electrical harness connector.
(4) Install knee blocker cover and knee blocker.
(5) Connect the battery negative cable.

ANTENNA BODY & CABLE

DESCRIPTION

DOMESTIC

The antenna body and cable is secured below the fender panel by the antenna cap nut through a mounting hole in the side of the right front fender. The primary coaxial antenna cable is then routed beneath the fender sheet metal and through a entry hole in the right cowl side panel into the interior of the vehicle. Inside the vehicle, the primary coaxial cable is connected to a secondary instrument panel antenna coaxial cable with an in-line connector that is located behind the right kick panel. The instrument panel antenna cable is then routed behind the instrument panel to the back of the radio.

EXPORT

The primary coaxial antenna cable is routed behind the A-pillar trim, up the right side of the roof panel above the headliner. Inside the vehicle, the primary coaxial cable is connected to a secondary instrument panel antenna coaxial cable with an in-line connector that is located behind the A-pillar trim at one end. At the other end, the cable is connected to the antenna module. The instrument panel antenna cable is then routed behind the instrument panel to the back of the radio.

OPERATION

The antenna body and cable connects the antenna mast (domestic) or quarter glass integral antenna (export) to the radio. The radio antenna is an electromagnetic circuit component used to capture radio frequency signals that are broadcast by local commercial radio stations in both the Amplitude Modulating (AM) and Frequency Modulating (FM) frequency ranges. These electromagnetic radio frequency signals induce small electrical modulations into the antenna as they move past the mast. The antenna body transfers the weak electromagnetic radio waves induced into the antenna into the center conductor of the flexible primary antenna coaxial cable. The braided outer shield of the antenna coaxial cable is grounded through both the antenna body and the radio chassis, effectively shielding the radio waves as they are conducted to the radio. The radio then tunes and amplifies the weak radio signals into stronger electrical signals in order to operate the audio system speakers.

DIAGNOSIS AND TESTING - ANTENNA BODY AND CABLE

The following four tests are used to diagnose the antenna with an ohmmeter:

- **Test 1** - Mast to ground test
- **Test 2** - Tip-of-mast to tip-of-conductor test
- **Test 3** - Body ground to battery ground test
- **Test 4** - Body ground to antenna coaxial cable shield test.

WARNING: DISABLE THE AIRBAG SYSTEM BEFORE ATTEMPTING ANY STEERING WHEEL, STEERING COLUMN, SEAT BELT TENSIONER, SIDE AIRBAG, OR INSTRUMENT PANEL COMPONENT DIAGNOSIS OR SERVICE. DISCONNECT AND ISOLATE THE BATTERY NEGATIVE (GROUND) CABLE, THEN WAIT TWO MINUTES FOR THE AIRBAG SYSTEM CAPACITOR TO DISCHARGE BEFORE PERFORMING FURTHER DIAGNOSIS OR SERVICE. THIS IS THE ONLY SURE WAY TO DISABLE THE AIRBAG SYSTEM. FAILURE TO TAKE THE PROPER PRECAUTIONS COULD RESULT IN ACCIDENTAL AIRBAG DEPLOYMENT AND POSSIBLE PERSONAL INJURY.

The ohmmeter test lead connections for each test are shown in the illustration (Fig. 2).

NOTE: This model has a two-piece antenna coaxial cable. Tests 2 and 4 must be conducted in two steps to isolate an antenna cable problem. First, test the primary antenna cable (integral to the antenna body and cable) from the coaxial cable connector behind the right side kick panel to the antenna body. Then, test the secondary antenna cable (instrument panel antenna cable) from the coaxial cable connector behind the right side kick panel to the coaxial cable connector at the radio.

ANTENNA BODY & CABLE (Continued)

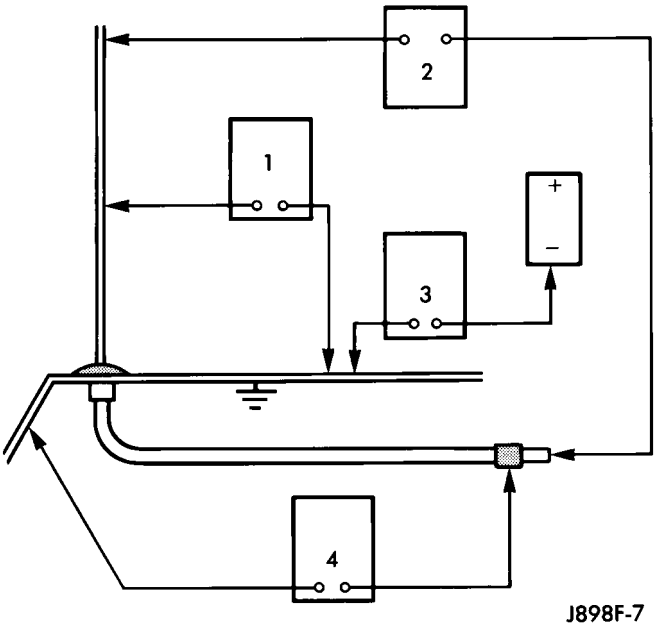

Fig. 2 Antenna Tests - Typical

TEST 1

Test 1 determines if the antenna mast is insulated from ground. Proceed as follows:

(1) Disconnect and isolate the antenna coaxial cable connector behind the right side kick panel.

(2) Touch one ohmmeter test lead to the tip of the antenna mast. Touch the other test lead to known ground. Check the ohmmeter reading for continuity.

(3) There should be no continuity. If OK, go to Test 2. If not OK, replace the faulty antenna body and cable.

TEST 2

Test 2 checks the antenna conductor components for an open circuit. This test should be performed first on the entire antenna circuit, from the antenna mast to the center conductor of the coaxial cable connector at the radio. If an open circuit is detected, each of the three antenna conductor components (antenna mast, antenna body and cable, instrument panel antenna cable) should be isolated and tested individually to locate the exact component that is the source of the open circuit. To begin this test, proceed as follows:

(1) Disconnect the instrument panel antenna cable coaxial connector from the back of the radio.

(2) Touch one ohmmeter test lead to the tip of the antenna mast. Touch the other test lead to the center conductor pin of the instrument panel antenna cable coaxial connector for the radio. Check the ohmmeter reading for continuity.

(3) There should be continuity. The ohmmeter should register only a fraction of an ohm resistance. High or infinite resistance indicates a damaged or open antenna conductor. If OK, go to Test 3. If not OK, isolate and test each of the individual antenna conductor components. Replace only the faulty antenna conductor component.

TEST 3

Test 3 checks the condition of the vehicle body ground connection. To begin this test, proceed as follows:

(1) This test must be performed with the battery positive cable disconnected from the battery. Disconnect and isolate both battery cables, negative cable first.

(2) Reconnect the battery negative cable.

(3) Touch one ohmmeter test lead to a good clean ground point on the vehicle fender. Touch the other test lead to the battery negative terminal post. Check the ohmmeter reading for continuity.

(4) There should be continuity. The ohmmeter should register less than one ohm resistance. High or infinite resistance indicates a loose, corroded, or damaged connection between the battery negative terminal and the vehicle body. If OK, go to Test 4. If not OK, check the battery negative cable connection to the vehicle body and the radio noise suppression ground strap connections to the engine and the vehicle body for being loose or corroded. Clean or tighten these connections as required.

TEST 4

Test 4 checks the condition of the connection between the antenna coaxial cable shield and the vehicle body ground as follows:

(1) Disconnect and isolate the antenna coaxial cable connector behind the right side kick panel.

(2) Touch one ohmmeter test lead to a good clean ground point on the vehicle fender. Touch the other test lead to the outer crimp on the antenna coaxial cable connector. Check the ohmmeter reading for continuity.

(3) There should be continuity. The ohmmeter should register less than one ohm resistance. High or infinite resistance indicates a loose, corroded, or damaged connection between the antenna body and the vehicle body or between the antenna body and the antenna coaxial cable shield. If not OK, clean the antenna body to fender mating surfaces and tighten the antenna cap nut to specifications.

(4) Check the resistance again with an ohmmeter. If the resistance is still more then one ohm, replace the faulty antenna body and cable.

ANTENNA BODY & CABLE (Continued)

REMOVAL

DOMESTIC

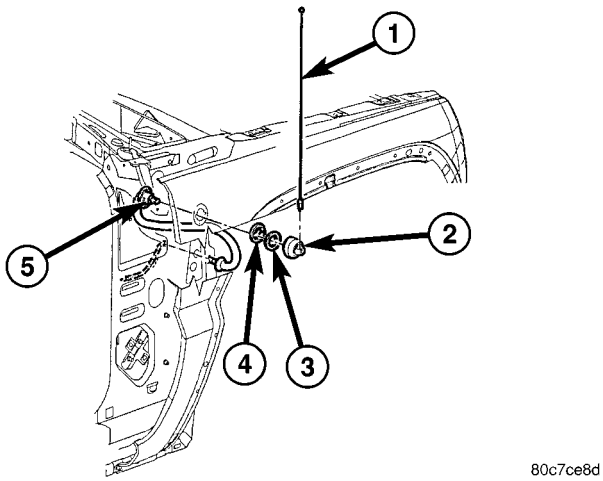

Fig. 3 ANTENNA BODY AND CABLE

(1) Disconnect and isolate the battery negative cable.

(2) Remove the antenna mast (1).

(3) Remove cover (2).

(4) Remove mounting nut (3).

(5) Remove bezel adapter.

(6) Remove right kick panel trim.

(7) Disconnect antenna body and cable from the instrument panel cable. Attach a wire or string (approximately 2 feet in length) to the cable to aid in installation of the new cable.

(8) Remove the upper fender mounting bolts (Fig. 3). Loosen the two fender mounting bolts located near the upper door hinge (Refer to 23 - BODY/EXTERIOR/FRONT FENDER - REMOVAL).

(9) Carefully pull fender out to access the antenna body and cable. Pull cable up through the opening with wire attached.

EXPORT

WARNING: DISABLE THE AIRBAG SYSTEM BEFORE ATTEMPTING ANY STEERING WHEEL, STEERING COLUMN, SEAT BELT TENSIONER, SIDE AIRBAG, OR INSTRUMENT PANEL COMPONENT DIAGNOSIS OR SERVICE. DISCONNECT AND ISOLATE THE BATTERY NEGATIVE (GROUND) CABLE, THEN WAIT TWO MINUTES FOR THE AIRBAG SYSTEM CAPACITOR TO DISCHARGE BEFORE PERFORMING FURTHER DIAGNOSIS OR SERVICE. THIS IS THE ONLY SURE WAY TO DISABLE THE AIRBAG SYSTEM. FAILURE TO TAKE THE PROPER PRECAUTIONS COULD RESULT IN ACCIDENTAL AIRBAG DEPLOYMENT AND POSSIBLE PERSONAL INJURY.

(1) Disconnect and isolate the battery negative cable.

(2) Remove the assist handles on the right side of the headliner (Refer to 23 - BODY/INTERIOR/ASSIST HANDLE - REMOVAL).

(3) Remove the right side visor (Refer to 23 - BODY/INTERIOR/SUN VISOR - REMOVAL).

(4) Remove the A-pillar trim (Refer to 23 - BODY/INTERIOR/A-PILLAR TRIM - REMOVAL).

(5) Lower headliner as necessary to access antenna cable (1).

(6) Disconnect antenna cable from antenna module (2).

(7) Remove antenna cable from roof panel by pulling on retaining clips (Fig. 4).

(8) Disconnect antenna cable from instrument panel antenna cable by disconnecting the antenna connector.

INSTALLATION

DOMESTIC

(1) Attached wire to new cable. Pull fender out and insert cable into opening.

(2) Pull cable through hole in kick panel area using the attached wire.

(3) Connect antenna body cable to the instrument panel cable.

(4) Install right kick panel trim.

(5) Install bezel adapter.

(6) Install mounting nut.

(7) Install cover.

(8) Install antenna mast. Tighten to 50 N·m (37 ft. lbs.). **Ensure that the antenna mast is fully seated on antenna base and that there is no gap between the mast and base.**

(9) Tighten fender mounting bolts near door hinge area.

(10) Install and tighten the upper fender mounting bolts (Refer to 23 - BODY/EXTERIOR/FRONT FENDER - INSTALLATION).

(11) Connect the battery negative cable.

ANTENNA BODY & CABLE (Continued)

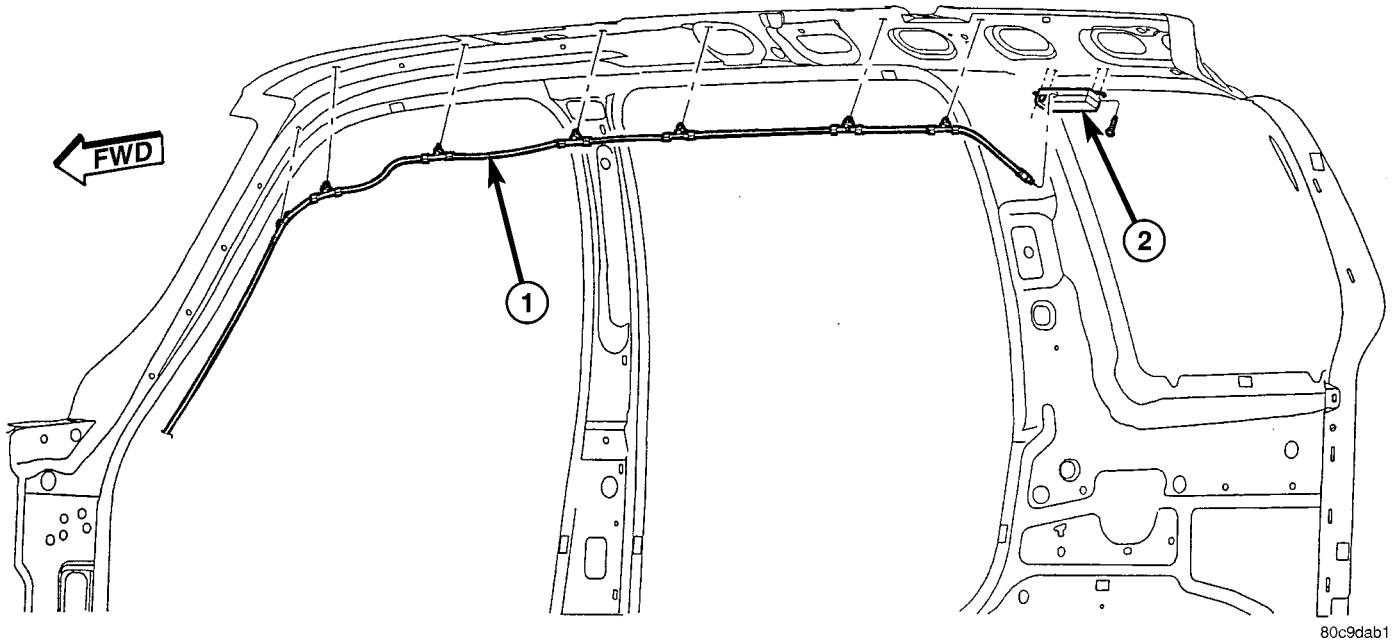

Fig. 4 ANTENNA CABLE

EXPORT

WARNING: DISABLE THE AIRBAG SYSTEM BEFORE ATTEMPTING ANY STEERING WHEEL, STEERING COLUMN, SEAT BELT TENSIONER, SIDE AIRBAG, OR INSTRUMENT PANEL COMPONENT DIAGNOSIS OR SERVICE. DISCONNECT AND ISOLATE THE BATTERY NEGATIVE (GROUND) CABLE, THEN WAIT TWO MINUTES FOR THE AIRBAG SYSTEM CAPACITOR TO DISCHARGE BEFORE PERFORMING FURTHER DIAGNOSIS OR SERVICE. THIS IS THE ONLY SURE WAY TO DISABLE THE AIRBAG SYSTEM. FAILURE TO TAKE THE PROPER PRECAUTIONS COULD RESULT IN ACCIDENTAL AIRBAG DEPLOYMENT AND POSSIBLE PERSONAL INJURY.

(1) Connect antenna cable to the instrument panel antenna cable.

(2) Install antenna cable to the roof panel by pressing retaining clips into position.

(3) Connect antenna cable to the antenna module.

(4) Raise headliner into position.

(5) Install A-pillar trim (Refer to 23 - BODY/INTERIOR/A-PILLAR TRIM - INSTALLATION).

(6) Install the right side sunvisor (Refer to 23 - BODY/INTERIOR/SUN VISOR - INSTALLATION).

(7) Install the assist handles (Refer to 23 - BODY/INTERIOR/ASSIST HANDLE - INSTALLATION).

(8) Connect the battery negative cable.

ANTENNA CABLE - SATELLITE RADIO

REMOVAL

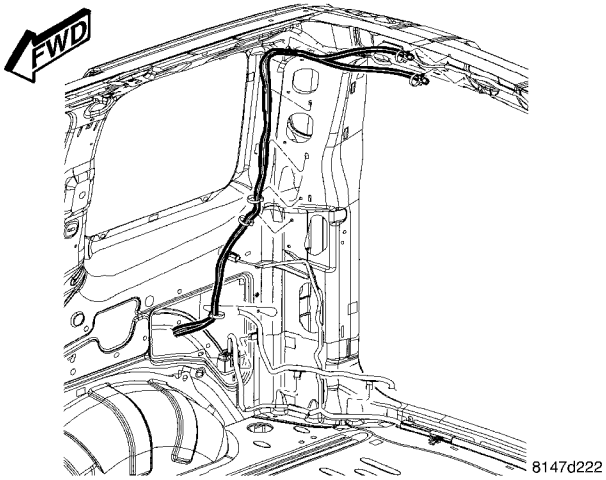

Fig. 5 SATELLITE ANTENNA CABLE

(1) Disconnect and isolate the battery cable.

(2) Remove headliner (Refer to 23 - BODY/INTERIOR/HEADLINER - REMOVAL).

(3) Disconnect antenna cable from antenna.

(4) Remove antenna cable retainers from C-pillar and roof panel (Fig. 5).

(5) Disconnect antenna cable from satellite receiver (Fig. 6).

ANTENNA CABLE - SATELLITE RADIO (Continued)

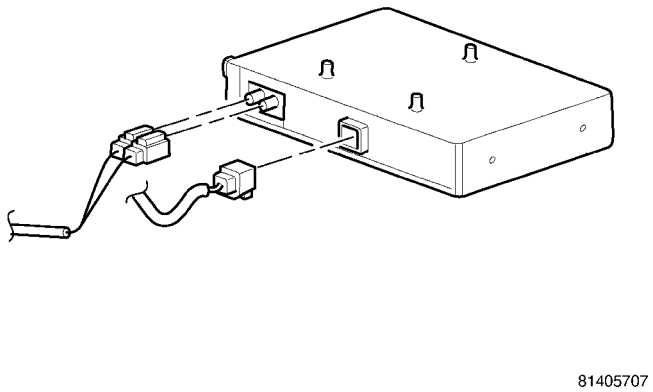

Fig. 6 SATELLITE MODULE CONNECTORS

INSTALLATION

(1) Connect antenna cable to satellite receiver.
(2) Install antenna cable retainers to C-pillar and roof panel.
(3) Connect antenna cable to satellite antenna.
(4) Install headliner (Refer to 23 - BODY/INTERIOR/HEADLINER - INSTALLATION).
(5) Connect battery negative cable.

ANTENNA MODULE

DESCRIPTION

The antenna module is an electromagnetic circuit component designed to capture and enhance radio frequency signals in both the AM and FM broadcast bands. The antenna module is mounted to the right rear roof rail under the headliner. The modules mounting brackets also double as the ground circuit. The module has an electrical connector that connects to the integral radio antenna, located on the right rear quarter glass. There is also an electrical connector for battery voltage and a coax cable connector.

OPERATION

The antenna module receives both AM and FM radio signals supplied by the side window integral radio antenna system and selectively amplifies them. The amplified signal is then sent through the body length coax cable to the radio input.

DIAGNOSIS AND TESTING

ANTENNA MODULE

ANTENNA MODULE DIAGNOSIS TABLE

CONDITION	POSSIBLE CAUSES	CORRECTION
NO AM RECEPTION, WEAK FM RECEPTION	1. Antenna module to antenna connector open or disconnected.	1. Repair open, reconnect antenna module connector to glass mounted antenna.
	2. Coax open or disconnected.	2. Repair open, reconnect coax.
	3. No battery power at antenna module.	3. Check fuse. if okay, repair open in battery voltage circuit.
NO AM OR FM RECEPTION	1. Coax disconnected at radio.	1. Reconnect coax.
	2. Coax shorted to ground.	2. Repair or Replace coax
WEAK OR NO AM/FM RECEPTION	1. Antenna Module faulty.	1. Substitute known good module. If reception improves, Antenna Module was faulty.

ANTENNA MODULE (Continued)

REMOVAL

WARNING: DISABLE THE AIRBAG SYSTEM BEFORE ATTEMPTING ANY STEERING WHEEL, STEERING COLUMN, SEAT BELT TENSIONER, SIDE AIRBAG, OR INSTRUMENT PANEL COMPONENT DIAGNOSIS OR SERVICE. DISCONNECT AND ISOLATE THE BATTERY NEGATIVE (GROUND) CABLE, THEN WAIT TWO MINUTES FOR THE AIRBAG SYSTEM CAPACITOR TO DISCHARGE BEFORE PERFORMING FURTHER DIAGNOSIS OR SERVICE. THIS IS THE ONLY SURE WAY TO DISABLE THE AIRBAG SYSTEM. FAILURE TO TAKE THE PROPER PRECAUTIONS COULD RESULT IN ACCIDENTAL AIRBAG DEPLOYMENT AND POSSIBLE PERSONAL INJURY.

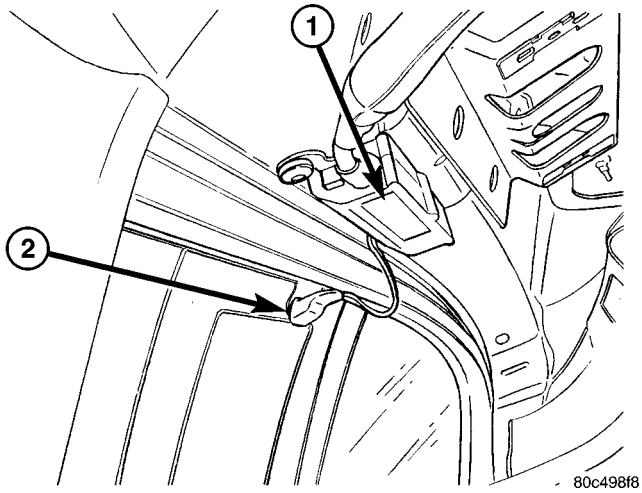

Fig. 7 ANTENNA MODULE

(1) Disconnect and isolate the battery negative cable.

(2) Remove the headliner as necessary to access antenna module (1).

(3) Disconnect the electrical harness connector from the antenna module.

(4) Disconnect the antenna module connector from the integral antenna.

(5) Remove the mounting fasteners and the antenna module (Fig. 7).

(6) Disconnect the coax lead from the antenna module.

INSTALLATION

WARNING: DISABLE THE AIRBAG SYSTEM BEFORE ATTEMPTING ANY STEERING WHEEL, STEERING COLUMN, SEAT BELT TENSIONER, SIDE AIRBAG, OR INSTRUMENT PANEL COMPONENT DIAGNOSIS OR SERVICE. DISCONNECT AND ISOLATE THE BATTERY NEGATIVE (GROUND) CABLE, THEN WAIT TWO MINUTES FOR THE AIRBAG SYSTEM CAPACITOR TO DISCHARGE BEFORE PERFORMING FURTHER DIAGNOSIS OR SERVICE. THIS IS THE ONLY SURE WAY TO DISABLE THE AIRBAG SYSTEM. FAILURE TO TAKE THE PROPER PRECAUTIONS COULD RESULT IN ACCIDENTAL AIRBAG DEPLOYMENT AND POSSIBLE PERSONAL INJURY.

(1) Plug coax into antenna module.

(2) Position antenna module onto right side upper roof rail and install screws.

(3) Connect antenna module lead to the integral antenna.

(4) Connect battery power supply lead to antenna module.

(5) Install headliner. (Refer to 23 - BODY/INTERIOR/HEADLINER - INSTALLATION)

(6) Connect battery negative cable.

ANTENNA-SATELLITE RADIO

DESCRIPTION

The satellite radio antenna is secured by a threaded fastener and two retainers which protrude through a hole in the roof panel. Two antenna cables from the antenna are connected to the satellite receiver.

OPERATION

The satellite radio antenna receives signals from orbiting satellites and sends these signals to the satellite receiver module. The satellite radio antenna must have open space in which to operate. Items carried on the roof, parking inside etc. can have an effect on the antenna's ability to receive signals.

REMOVAL

(1) Disconnect and isolate the battery negative cable.

(2) Remove the headliner (Refer to 23 - BODY/INTERIOR/HEADLINER - REMOVAL).

(3) Disconnect the antenna cables from the antenna.

(4) Remove the retaining fastener.

(5) From inside the vehicle, and using a flat bladed tool, depress one of the retaining tabs on the antenna. Push up the one side of the antenna connector through the roof panel (Fig. 8). Depress the other side of the connector and remove the antenna.

INSTALLATION

(1) Insert wire harness through hole in roof panel. Press antenna into position until both retainers snap into place.

(2) Install and tighten the retaining fasteners.

(3) Connect antenna cable connectors to antenna.

ANTENNA-SATELLITE RADIO (Continued)

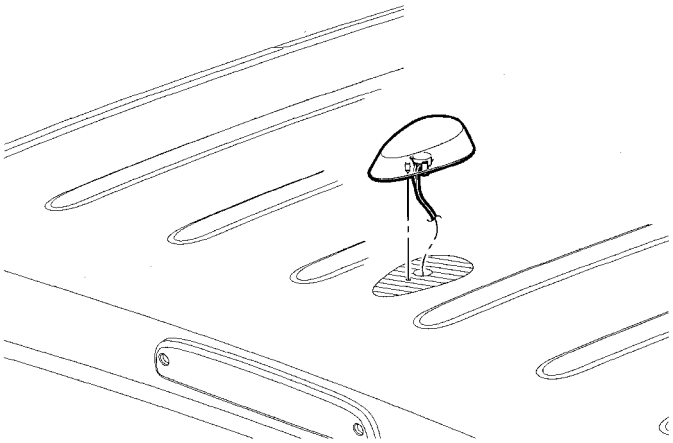

Fig. 8 SATELLITE ANTENNA

(4) Install headliner (Refer to 23 - BODY/INTERIOR/HEADLINER - INSTALLATION).

(5) Connect battery negative cable.

CD CHANGER

DESCRIPTION

The CD changer (if equipped) is mounted in the cargo area of the passenger compartment on the right rear quarter panel.

The controls on the radio receiver operate the CD changer through messages sent over the Programmable Communications Interface (PCI) data bus network. For diagnosis of the messaging functions of the radio receiver and the CD changer, or of the PCI data bus, a DRB scan tool and the proper Diagnostic Procedures manual are required.

OPERATION

The CD changer will only operate when the ignition switch is in the On or Accessory positions, and the radio is turned on. The six-CD magazine may be ejected with the ignition in the Off position.

REMOVAL

(1) Disconnect and isolate the battery negative cable.

(2) Remove the right rear quarter trim panel. (Refer to 23 - BODY/INTERIOR/QUARTER TRIM PANEL - REMOVAL).

(3) Disconnect the electrical wire harness connector.

(4) Remove the mounting fasteners (Fig. 9).

(5) Remove the CD Changer (1) from the vehicle.

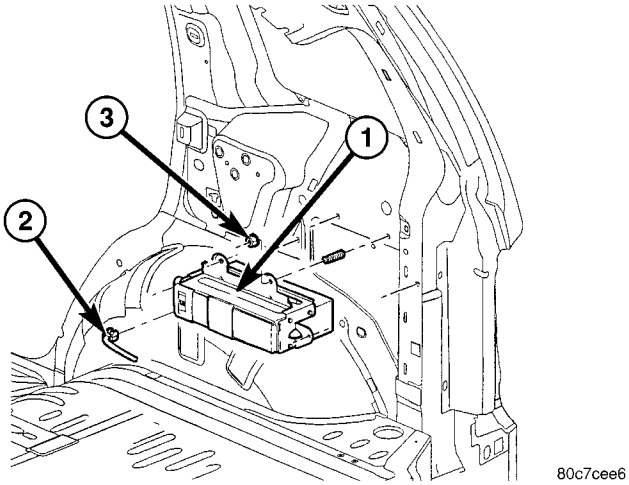

Fig. 9 CD CHANGER

INSTALLATION

(1) Install the CD Changer to the vehicle.

(2) Install and tighten the mounting fasteners.

(3) Connect the wire harness connector.

(4) Install the right rear quarter trim panel (Refer to 23 - BODY/INTERIOR/QUARTER TRIM PANEL - INSTALLATION).

(5) Connect the battery negative cable.

INSTRUMENT PANEL ANTENNA CABLE

REMOVAL

DOMESTIC

WARNING: DISABLE THE AIRBAG SYSTEM BEFORE ATTEMPTING ANY STEERING WHEEL, STEERING COLUMN, SEAT BELT TENSIONER, SIDE AIRBAG, OR INSTRUMENT PANEL COMPONENT DIAGNOSIS OR SERVICE. DISCONNECT AND ISOLATE THE BATTERY NEGATIVE (GROUND) CABLE, THEN WAIT TWO MINUTES FOR THE AIRBAG SYSTEM CAPACITOR TO DISCHARGE BEFORE PERFORMING FURTHER DIAGNOSIS OR SERVICE. THIS IS THE ONLY SURE WAY TO DISABLE THE AIRBAG SYSTEM. FAILURE TO TAKE THE PROPER PRECAUTIONS COULD RESULT IN ACCIDENTAL AIRBAG DEPLOYMENT AND POSSIBLE PERSONAL INJURY.

(1) Disconnect and isolate the battery negative cable.

(2) Remove the instrument panel (Refer to 23 - BODY/INSTRUMENT PANEL/INSTRUMENT PANEL ASSEMBLY - REMOVAL).

INSTRUMENT PANEL ANTENNA CABLE (Continued)

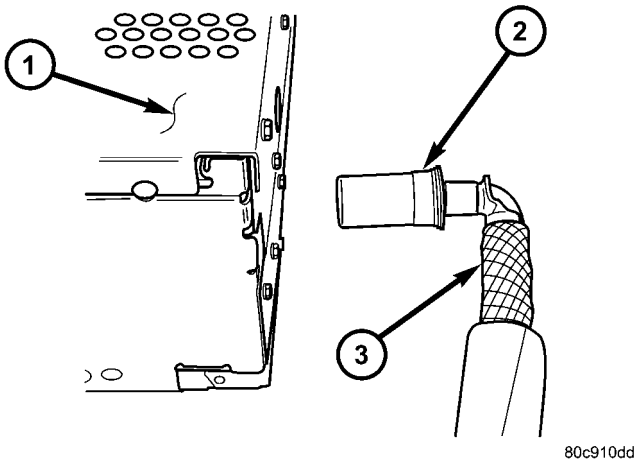

Fig. 10 ANTENNA CONNECTION TO RADIO

CAUTION: Pulling the antenna cable straight out of the radio without pulling on the locking antenna connector could damage the cable or radio.

(3) Disconnect the antenna cable from radio by pulling the locking antenna connector (2) away from radio (Fig. 10).

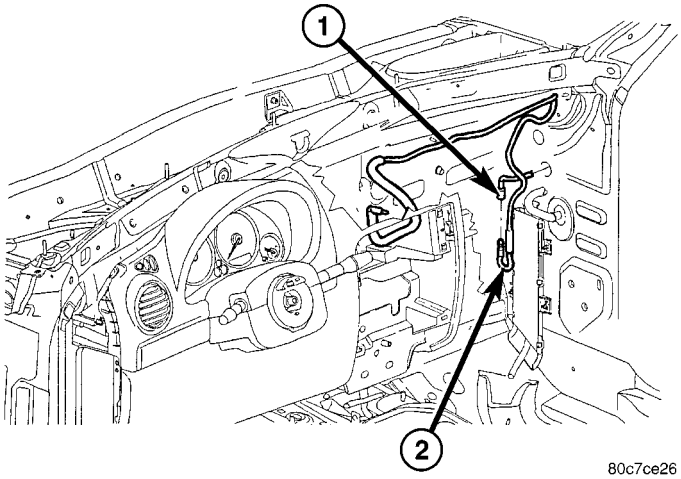

Fig. 11 INSTRUMENT PANEL ANTENNA CABLE

(4) Disengage each of the retainers that secure the cable to the instrument panel.

(5) Remove the cable (1) from the instrument panel (Fig. 11).

EXPORT

WARNING: DISABLE THE AIRBAG SYSTEM BEFORE ATTEMPTING ANY STEERING WHEEL, STEERING COLUMN, SEAT BELT TENSIONER, SIDE AIRBAG, OR INSTRUMENT PANEL COMPONENT DIAGNOSIS OR SERVICE. DISCONNECT AND ISOLATE THE BATTERY NEGATIVE (GROUND) CABLE, THEN WAIT TWO MINUTES FOR THE AIRBAG SYSTEM CAPACITOR TO DISCHARGE BEFORE PERFORMING FURTHER DIAGNOSIS OR SERVICE. THIS IS THE ONLY SURE WAY TO DISABLE THE AIRBAG SYSTEM. FAILURE TO TAKE THE PROPER PRECAUTIONS COULD RESULT IN ACCIDENTAL AIRBAG DEPLOYMENT AND POSSIBLE PERSONAL INJURY.

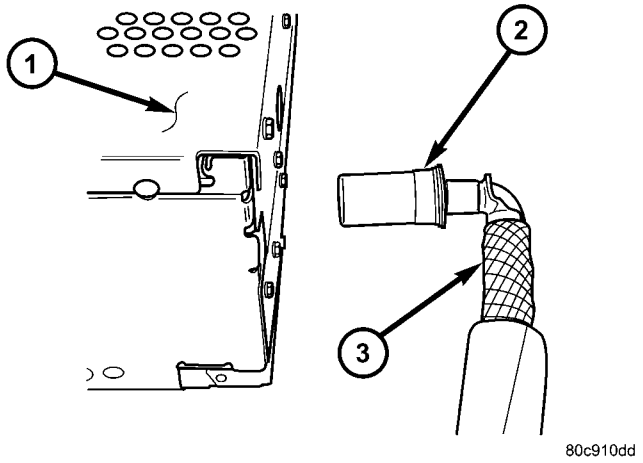

Fig. 12 ANTENNA CONNECTION TO RADIO

(1) Disconnect and isolate the battery negative cable.

(2) Remove the instrument panel (Refer to 23 - BODY/INSTRUMENT PANEL/INSTRUMENT PANEL ASSEMBLY - REMOVAL).

CAUTION: Pulling the antenna cable straight out of the radio without pulling on the locking antenna connector could damage the cable or radio.

(3) Disconnect antenna cable from radio by pulling on the locking antenna connector (2) (Fig. 12).

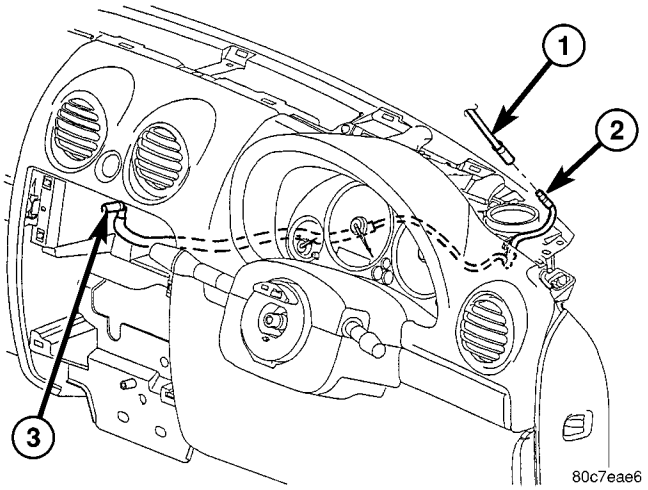

Fig. 13 INSTRUMENT PANEL ANTENNA CABLE

(4) Disengage each of the retainers that secure the cable (2) to the instrument panel (Fig. 13).

INSTRUMENT PANEL ANTENNA CABLE (Continued)

INSTALLATION

DOMESTIC

WARNING: DISABLE THE AIRBAG SYSTEM BEFORE ATTEMPTING ANY STEERING WHEEL, STEERING COLUMN, SEAT BELT TENSIONER, SIDE AIRBAG, OR INSTRUMENT PANEL COMPONENT DIAGNOSIS OR SERVICE. DISCONNECT AND ISOLATE THE BATTERY NEGATIVE (GROUND) CABLE, THEN WAIT TWO MINUTES FOR THE AIRBAG SYSTEM CAPACITOR TO DISCHARGE BEFORE PERFORMING FURTHER DIAGNOSIS OR SERVICE. THIS IS THE ONLY SURE WAY TO DISABLE THE AIRBAG SYSTEM. FAILURE TO TAKE THE PROPER PRECAUTIONS COULD RESULT IN ACCIDENTAL AIRBAG DEPLOYMENT AND POSSIBLE PERSONAL INJURY.

(1) Position the instrument panel antenna cable onto the instrument panel.

(2) Engage each of the retainers that secure the cable to the back side of the instrument panel.

(3) Connect cable to radio.

(4) Install instrument panel (Refer to 23 - BODY/INSTRUMENT PANEL/INSTRUMENT PANEL ASSEMBLY - INSTALLATION).

(5) Connect the battery negative cable.

EXPORT

WARNING: DISABLE THE AIRBAG SYSTEM BEFORE ATTEMPTING ANY STEERING WHEEL, STEERING COLUMN, SEAT BELT TENSIONER, SIDE AIRBAG, OR INSTRUMENT PANEL COMPONENT DIAGNOSIS OR SERVICE. DISCONNECT AND ISOLATE THE BATTERY NEGATIVE (GROUND) CABLE, THEN WAIT TWO MINUTES FOR THE AIRBAG SYSTEM CAPACITOR TO DISCHARGE BEFORE PERFORMING FURTHER DIAGNOSIS OR SERVICE. THIS IS THE ONLY SURE WAY TO DISABLE THE AIRBAG SYSTEM. FAILURE TO TAKE THE PROPER PRECAUTIONS COULD RESULT IN ACCIDENTAL AIRBAG DEPLOYMENT AND POSSIBLE PERSONAL INJURY.

(1) Position the instrument panel antenna cable onto the instrument panel.

(2) Engage each of the retainers that secure the cable (2) to the back side of the instrument panel.

(3) Connect cable to radio.

(4) Install instrument panel (Refer to 23 - BODY/INSTRUMENT PANEL/INSTRUMENT PANEL ASSEMBLY - INSTALLATION).

(5) Connect the battery negative cable.

QUARTER GLASS INTEGRAL ANTENNA

DESCRIPTION

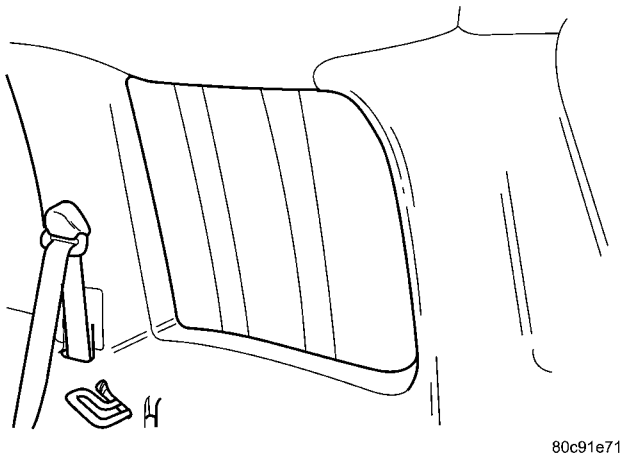

Fig. 14 QUARTER GLASS ANTENNA

The integral radio antenna element is bonded to the right rear quarter glass (Fig. 14) and is replaced with the glass assembly only.

OPERATION

The integral antenna receives radio frequencies and sends them to the antenna module for amplification.

DIAGNOSIS AND TESTING - QUARTER GLASS INTEGRAL ANTENNA

The antenna grid pattern connects to the terminal tab for both AM and FM.

For circuit descriptions and diagrams, refer to the appropriate wiring information. The wiring information includes wiring diagrams, proper wire and connector repair procedures, details of wire harness routing and retention, connector pin-out information and location views for the various wire harness connectors, splices and grounds. To detect breaks in the integral antenna elements, the following procedure is required:

(1) Disconnect the antenna module connector from the antenna terminals on the glass.

(2) Using an ohmmeter, place a lead on one of the terminals and check each end of the grid pattern connected to this terminal for continuity. If continuity is not present, move one lead through the grid in progression starting at the terminal with the other lead on the terminal until continuity is lost. A break in the antenna grid can be repaired using a Mopar Rear Window Defogger Repair Kit (Part Number 4267922)

QUARTER GLASS INTEGRAL ANTENNA (Continued)

or equivalent (Refer to 8 - ELECTRICAL/HEATED GLASS - STANDARD PROCEDURE).

RADIO

DESCRIPTION

RADIO

Available radios include:

- AM/FM/cassette with CD changer control feature (RBB sales code)
- AM/FM/cassette/CD/ with CD changer control feature (RAZ sales code)
- AM/FM/CD with CD changer control feature (RBK sales code)
- AM/FM/ 6 CD in-dash changer (RBQ sales code)
- AM/FM/cassette/CD with CD changer control feature (RAD, RBT or RBY sales code) - export only
- AM/FM/CD (REK sales code) - export only
- AM/FM/DVD with GPS navigation (RB1 sales code)
- AM/FM/DVD with GPS navigation (RB3 sales code) - export only

All radio receivers can communicate on the Programmable Communications Interface (PCI) data bus network.

COUNTRY CODE AND CABIN EQ SETTING - REK RADIO ONLY

The REK radio may require the country code and cabin EQ setting to be set if not programmed correctly.

If battery power is lost to radio, the anti-theft code must be entered before radio will operate.

If the region the vehicle will be driven in uses 10 kHz spacing on the AM band (i.e. 950, 960 etc.), set the Country Code to “USA”. If the region uses 9 kHz spacing, has LW and MW Bands, and uses RDS (i.e. AF, PTY, TA, etc.), set the radio for “EUR”. If neither of the previous settings apply, and the vehicle is not being driven in Japan, set the radio to “ROW”. Vehicles driven in Japan should have the radio set to “JPN”. The following chart list selected country codes and radio broadcast standards.

To enter the country code and EQ setting, use a scan tool.

COUNTRY CODE SELECTION CHART

INTERNATIONAL COUNTRY CODE	RADIO BROADCAST STD.
AFGAHANISTAN (8AA)	ROW
ALBANIA (8BA)	ROW
ALGERIA (8AC)	EUR
AMERICAN SAMOA (8AD)	ROW
ANDORRA (8AE)	ROW
ANGOLA (8AF)	ROW
ANGUILLA (8HA)	USA
ANTARCTICA (8HB)	ROW
ANTIGUA (8AG)	USA
ARGENTINA (8AJ)	USA
ARMENIA (8HC)	EUR
ARUBA (8AK)	USA
AUSTRALIA (8AL)	ROW
AUSTRIA (8AM)	EUR
AZERBAIJAN (8HD)	ROW
AZORES (8AN)	USA
BAHAMAS (8AP)	USA
BAHRAIN (8AR)	ROW
BANGLADESH (8AS)	ROW
BARBADOS & ISLANDS (8AT)	ROW
BELARUS (8G5)	EUR
BELGIUM & LUXEMBOURG (8AU)	EUR
BELIZE (8AV)	USA
BENIN (8WA)	ROW
BERMUDA (8AX)	USA
BOLIVIA (8AY)	USA
BOSNIA-HERZEGOVINA (8HE)	ROW
BOTSWANA (8AZ)	ROW
BRAZIL (8A1)	USA
BRITISH INDIA OCEAN (8A2)	ROW
BRITISH VIRGIN ISLANDS (8A3)	USA
BRUNEI (8A4)	ROW
BULGARIA (8A5)	EUR
BURKINA FASO (8GM)	ROW
CAMBODIA/ KAMPUCHEA (8DG)	ROW
CAMEROON (8A9)	ROW
CANARY ISLANDS (8BB)	ROW
CAPE VERDE (8BD)	ROW

RADIO (Continued)

INTERNATIONAL COUNTRY CODE	RADIO BROADCAST STD.
CAYMAN ISLANDS (8BF)	USA
CENTRAL AFRICAN REPUBLIC (8BG)	ROW
CHAD (8BJ)	ROW
CHILE (8BK)	USA
CHINA MAINLAND (8BL)	ROW
COLOMBIA (8BM)	USA
COMOROS (8BN)	ROW
CONGO (8BP)	ROW
COSTA RICA (8BS)	USA
CROATIA (8G7)	EUR
CUBA (8BT)	USA
CYPRUS (8BB)	EUR
CZECH. REPUBLIC (8BW)	EUR
DENMARK (8BX)	EUR
DJIBOUTI (8BU)	ROW
DOMINICA (8BZ)	USA
DOMINICAN REPUBLIC (8B1)	USA
ECUADOR (8B2)	USA
EGYPT (8B3)	ROW
EL SALVADOR (8B4)	USA
EQUATORIAL GUINEA (8B5)	ROW
ERITREA (8BU)	ROW
ESTONIA (8B6)	EUR
ETHOPIA (8B7)	ROW
FAEROE ISLANDS (8HG)	ROW
FAUKLAND ISLANDS (8B8)	ROW
FIJI (8B9)	EUR
FINLAND (8CA)	EUR
FRANCE (8CD)	EUR
FRENCH GUIANA (8CC)	ROW
FRENCH POLYNESIA / TAHITI (8F9)	ROW
GABON (8CF)	ROW
GAMBIA (8CG)	ROW
GEORGIA (8HH)	EUR

INTERNATIONAL COUNTRY CODE	RADIO BROADCAST STD.
GERMANY (8CJ)	EUR
GHANA (8CK)	ROW
GIBRALTAR (8CL)	ROW
GREECE (8CP)	EUR
GREENLAND (8CR)	EUR
GRENADA (8CS)	USA
GUADELOUPE (8CT)	ROW
GUAM (8CU)	ROW
GUATEMALA (8CV)	USA
GUINEA (8CW)	ROW
GUINEA - BISSAU (8CX)	ROW
GUYANA (8CY)	USA
HAITI (8CZ)	USA
HONDURAS (8C1)	USA
HONG KONG (8C2)	ROW
HUNGARY (8C3)	EUR
ICELAND (8C4)	EUR
INDIA (8C5)	ROW
INDONESIA (8C6)	ROW
IRAN (8C7)	ROW
IRAQ (8C8)	ROW
IRELAND (8C9)	EUR
ISRAEL (8DA)	ROW
ITALY (8DB)	EUR
IVORY COAST (8DC)	ROW
JAMACIA (8DD)	USA
JAPAN (8DE)	JAN
JORDAN (8DF)	ROW
KAZAKSTAN (8G6)	EUR
KENYA (8DH)	ROW
KIRIBATI/GILBERT (8HJ)	ROW
KUWAIT (8DK)	ROW
KYRGHYSTAN (8HK)	EUROPEAN
LAOS (8DM)	ROW
LATVIA (8G2)	EUR
LEBANON (8DN)	ROW
LESOTHO (8DP)	ROW
LIBERIA (8DR)	ROW
LITHUANIA (8G3)	EUR
LYBIA (8DT)	ROW
MACAO (8DU)	ROW

RADIO (Continued)

INTERNATIONAL COUNTRY CODE	RADIO BROADCAST STD.
MALAGASY/MADASGAR (8DW)	ROW
MALAWI (8DX)	ROW
MALAYSIA (8DY)	ROW
MALDIVE (8DZ)	ROW
MALI (8D1)	ROW
MALTA & GOZO (8D2)	ROW
MARSHALL ISLANDS (8D4)	ROW
MARTINIQUE (8D5)	ROW
MAURITANIA (8D6)	ROW
MAURITIUS (8D7)	ROW
MAYOTTE (8HL)	ROW
MEXICO (8D9)	USA
MICRONESIA (8BE)	ROW
MOLDOVA (8HM)	EUR
MONACO (8EF)	EUR
MONGOLIA (8EE)	ROW
MOROCCO (8EG)	EUR
MOZAMBIQUE (8PH)	ROW
NAMBIA (8EJ)	ROW
NEPAL (8EL)	ROW
NETHERLANDS (8EM)	EUR
NETHERLANDS ANTILLES/CURACOA (8HN)	USA
NEW CALEDONIA (8EN)	ROW
NEW ZEALAND (8EP)	ROW
NICARAGUA (8ER)	USA
NIGER (8ES)	ROW
NIGERIA (8ET)	ROW
NORTH KOREA (8EV)	ROW
NORWAY (8EW)	EUR
OMAN (8EX)	ROW
PAKISTAN (8EY)	ROW
PANAMA (8EZ)	USA
PAPUA NEW GUINEA (8E1)	ROW
PARAGUAY (8E2)	USA
PERU (8E4)	USA
PHILIPPINES (8E5)	ROW
POLAND (8E7)	EUR
PORTUGAL (8E8)	EUR

INTERNATIONAL COUNTRY CODE	RADIO BROADCAST STD.
PUERTO RICO (8E9)	USA
QATAR (8FA)	ROW
ROMANIA (8FB)	EUR
RUSSIA (8FE)	EUR
RWANDA (8FD)	ROW
SAO TOME (8FG)	ROW
SAUDI ARABIA (8FH)	ROW
SENEGAL (8FJ)	ROW
SERBIA (8HS)	EUR
SEYCHELLES (8FK)	ROW
SIERRA LEONE (8FL)	ROW
SINGAPORE (8FM)	ROW
SLOVAKIA (8CE)	EUR
SLOVENIA (8GX)	EUR
SOLOMAN ISLANDS (8FN)	ROW
SOMALIA (8FP)	ROW
SOUTH AFRICA (8FR)	ROW
SOUTH KOREA (8DJ)	ROW
SPAIN (8FS)	EUR
SRI LANKA (8FT)	EUR
ST. KITTS AND NEVIS (8FU)	USA
ST. LUCIA (8FX)	USA
ST. PIERRE & MIQUELON (8FZ)	USA
ST. THOMAS & U.S. VIRGIN ISLANDS (8F1)	USA
ST. VINCENT (8F2)	USA
SUDAN (8F3)	ROW
SURINAME (8F4)	ROW
SWAZILAND (8F5)	EUR
SWEDEN (8F6)	EUR
SWITZERLAND (8F7)	EUR
SYRIA (8F8)	ROW
TAIWAN (8GA)	ROW
TAJIKISTAN (8HT)	EUR
TANZANIA (8GB)	ROW
THAILAND (8GC)	ROW
TOGO (8GD)	ROW
TONGA (8GE)	ROW
TRINIDAD & TOBAGO (8GF)	USA

RADIO (Continued)

INTERNATIONAL COUNTRY CODE	RADIO BROADCAST STD.
TUNISIA (8GG)	EUR
TURKEY (8GH)	ROW
TURKMENISTAN (8HV)	EUR
TURKS & CAICAO ISLAND (8GJ)	USA
TUVALU (8CM)	ROW
UGANDA (8GK)	ROW
UKRAINE (8FC)	EUR
UNITED ARAB EMIRATES (8GL)	ROW
UNITED KINGDOM (8CN)	EUR
URUGUAY (8GN)	USA
UZBEKISTAN (8HW)	EUR
VANUATU (8GP)	ROW
VATICAN CITY (8GR)	EUR
VENEZUELA (8GS)	USA
VIETNAM (8GT)	ROW
WALLIS & FUTUNA (8GV)	ROW
WESTERN SAMOA (8GW)	ROW
YEMEN (8AH)	ROW
YUGOSLAVIA (8HR)	EUR
ZAIRE (8GY)	ROW
ZAMBIA (8GZ)	ROW
ZIMBABWE (8G1)	ROW

OPERATION

The radio receiver operates on ignition switched battery current that is available only when the ignition switch is in the On or Accessory positions. The electronic digital clock function of the radio operates on fused battery current supplied through the IOD fuse, regardless of the ignition switch position.

For complete circuit diagrams, refer to the appropriate wiring information.

REMOVAL

(1) Disconnect and isolate the battery negative cable.

(2) Remove the instrument panel center trim panel.

(3) Remove the radio mounting fasteners (Fig. 15).

CAUTION: Pulling the antenna cable straight out of the radio without pulling on the locking antenna connector could damage the cable or radio.

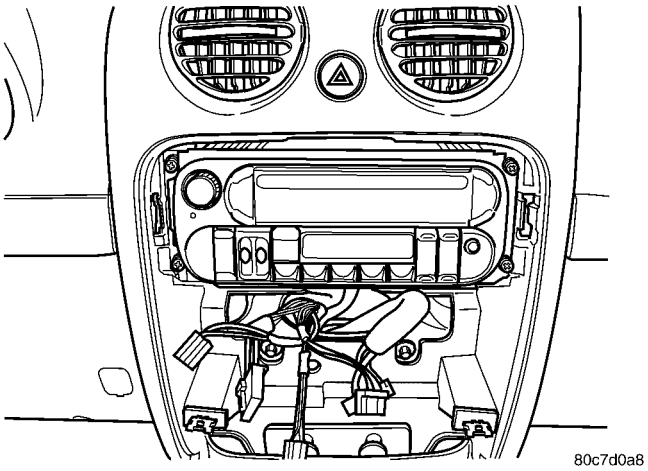

Fig. 15 RADIO

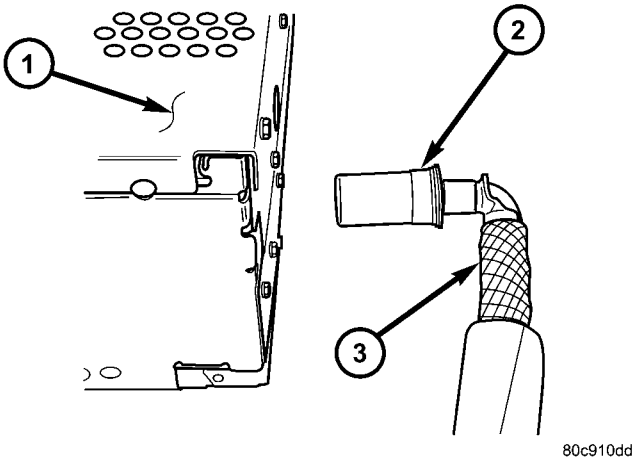

Fig. 16 ANTENNA CONNECTION TO RADIO

(4) Disconnect the antenna cable by pulling the locking antenna connector (2) away from the radio (Fig. 16).

(5) Disconnect the electrical harness connector(s).

(6) Remove radio from instrument panel.

INSTALLATION

(1) Connect the wire harness connector(s).

(2) Connect the antenna cable.

(3) Install the radio to the instrument panel.

(4) Install the radio mounting fasteners.

(5) Install the instrument panel center trim panel.

(6) Connect the battery negative cable.

RADIO NOISE SUPPRESSION COMPONENTS

DESCRIPTION

Radio Frequency Interference (RFI) and Electro-Magnetic Interference (EMI) can be produced by any

RADIO NOISE SUPPRESSION COMPONENTS (Continued)

on-board or external source of electromagnetic energy. These electromagnetic energy sources can radiate electromagnetic signals through the air, or conduct them through the vehicle electrical system.

When the audio system converts RFI or EMI to an audible acoustic wave form, it is referred to as radio noise. This undesirable radio noise is generally manifested in the form of “buzzing,” “hissing,” “popping,” “clicking,” “crackling,” and/or “whirring” sounds. In most cases, RFI and EMI radio noise can be suppressed using a combination of vehicle and component grounding, filtering and shielding techniques. This vehicle is equipped with factory-installed radio noise suppression devices that were designed to minimize exposure to typical sources of RFI and EMI; thereby, minimizing radio noise complaints.

Radio noise suppression is accomplished primarily through circuitry or devices that are integral to the factory-installed radios, audio power amplifiers and other on-board electrical components such as generators, wiper motors, blower motors, and fuel pumps that have been found to be potential sources of RFI or EMI. External radio noise suppression devices that are used on this vehicle to control RFI or EMI, and can be serviced, include the following:

- **Engine-to-body ground strap** - This length of braided ground strap has an eyelet terminal connector crimped to each end. One end is secured to the engine cylinder head(s). The other is secured to the plenum.
- **Resistor-type spark plugs** - This type of spark plug has an internal resistor connected in series between the spark plug terminal and the center electrode to help reduce the production of electromagnetic radiation that can result in radio noise.

OPERATION

There are two common strategies that can be used to suppress Radio Frequency Interference (RFI) and ElectroMagnetic Interference (EMI) radio noise. The first suppression strategy involves preventing the production of RFI and EMI electromagnetic signals at their sources. The second suppression strategy involves preventing the reception of RFI and EMI electromagnetic signals by the audio system components.

The use of braided ground straps in key locations is part of the RFI and EMI prevention strategy. These ground straps ensure adequate ground paths, particularly for high current components such as many of those found in the starting, charging, ignition, engine control and transmission control systems. An insufficient ground path for any of these high current components may result in radio noise caused by induced voltages created as the high current seeks alternative ground paths through components or circuits intended for use by, or in close proximity to the audio system components or circuits.

Preventing the reception of RFI and EMI is accomplished by ensuring that the audio system components are correctly installed in the vehicle. Loose, corroded or improperly soldered wire harness connections, improperly routed wiring and inadequate audio system component grounding can all contribute to the reception of RFI and EMI. A properly grounded antenna body and radio chassis, as well as a shielded antenna coaxial cable with clean and tight connections will each help reduce the potential for reception of RFI and EMI.

REMOVAL

2.4L ENGINE

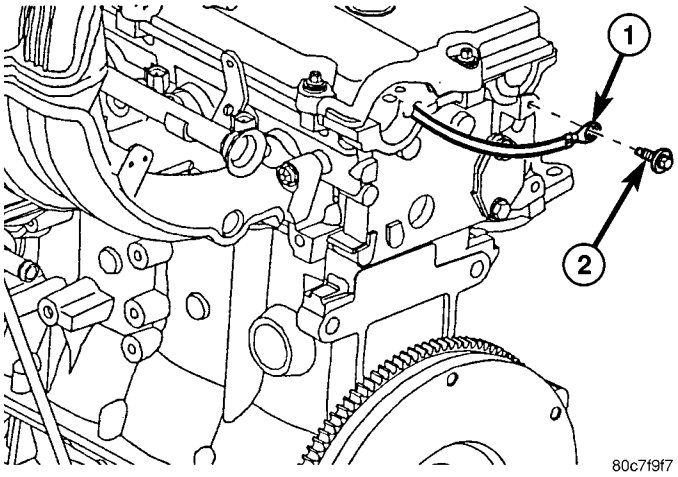

Fig. 17 ENGINE GROUND STRAP - 2.4L

(1) Disconnect and isolate the battery negative cable.

(2) Remove the retaining bolt (2) from the engine cylinder head (Fig. 17).

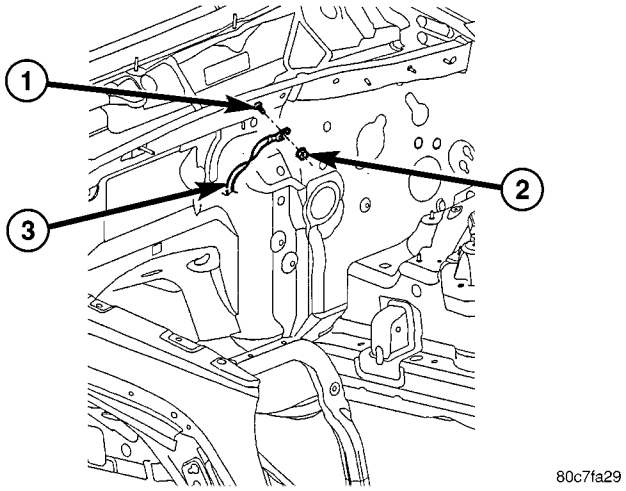

Fig. 18 GROUND STRAP TO PLENUM

RADIO NOISE SUPPRESSION COMPONENTS (Continued)

(3) Remove the retaining nut (2) from the plenum (Fig. 18).

2.5L ENGINE

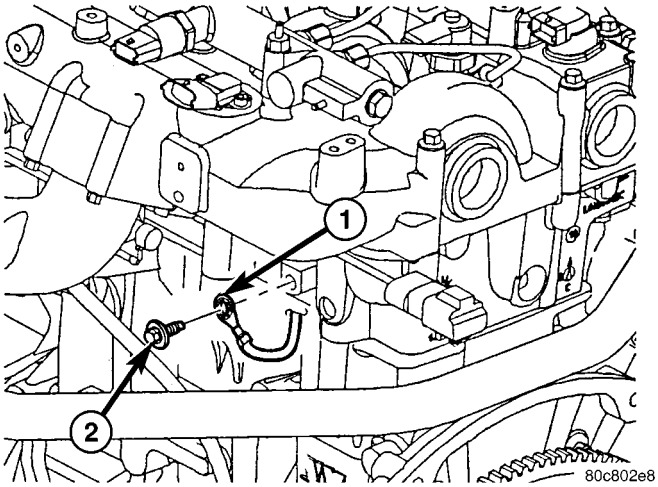

Fig. 19 ENGINE GROUND STRAP - 2.5L

(1) Disconnect and isolate the battery negative cable.

(2) Remove the retaining bolt (2) from the engine cylinder head (Fig. 19).

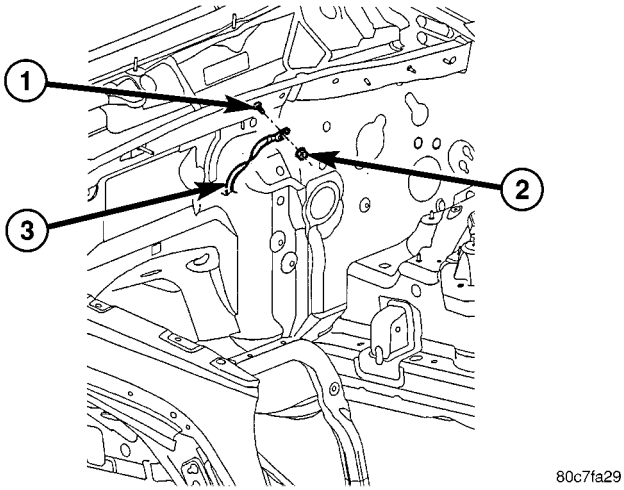

Fig. 20 GROUND STRAP TO PLENUM

(3) Remove the retaining nut (2) from the plenum (Fig. 20).

3.7L ENGINE

(1) Disconnect and isolate the battery negative cable.

(2) Remove the retaining bolts (2) from the engine cylinder heads (Fig. 21).

(3) Remove the retaining nut (2) from the plenum (Fig. 22).

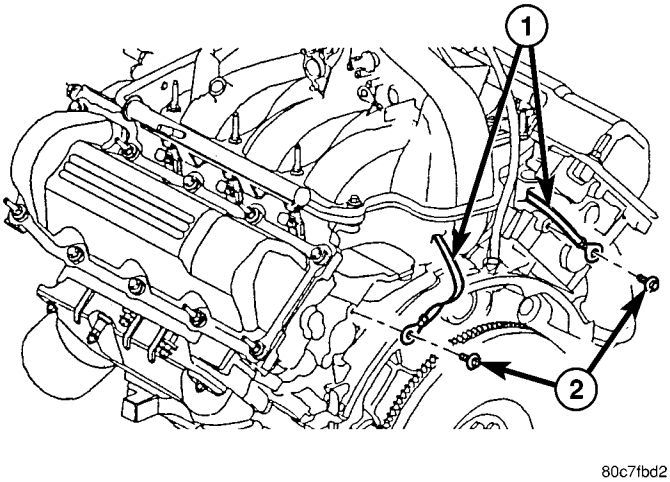

Fig. 21 ENGINE GROUND STRAP - 3.7L

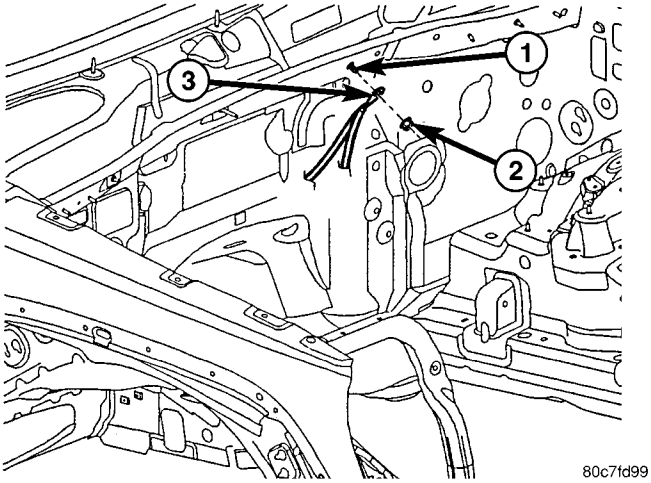

Fig. 22 GROUND STRAP TO PLENUM

INSTALLATION

2.4L ENGINE

(1) Install the retaining nut and ground strap to the plenum.

(2) Install the retaining bolt and ground strap to the engine cylinder head.

(3) Connect the battery negative cable.

2.5L ENGINE

(1) Install the retaining nut and ground strap to the plenum.

(2) Install the retaining bolt and ground strap to the engine cylinder head.

(3) Connect the battery negative cable.

3.7L ENGINE

(1) Install the retaining nut and ground strap to the plenum.

(2) Install the retaining bolts and ground strap to the engine cylinder heads.

RADIO NOISE SUPPRESSION COMPONENTS (Continued)

(3) Connect the battery negative cable.

RECEIVER-SATELLITE

DESCRIPTION

The satellite receiver is located behind the right rear quarter trim.

OPERATION

The satellite receiver module receives signals from the roof mounted antenna and processes this information before it is sent to the radio. The module operates on both battery feed circuits and CAN bus messages. It will operate with the ignition key in the run or accessory position only.

REMOVAL

(1) Disconnect and isolate the battery negative cable.

(2) Remove the right quarter trim panel (Refer to 23 - BODY/INTERIOR/QUARTER TRIM PANEL - REMOVAL).

(3) Remove mounting fasteners (Fig. 23).

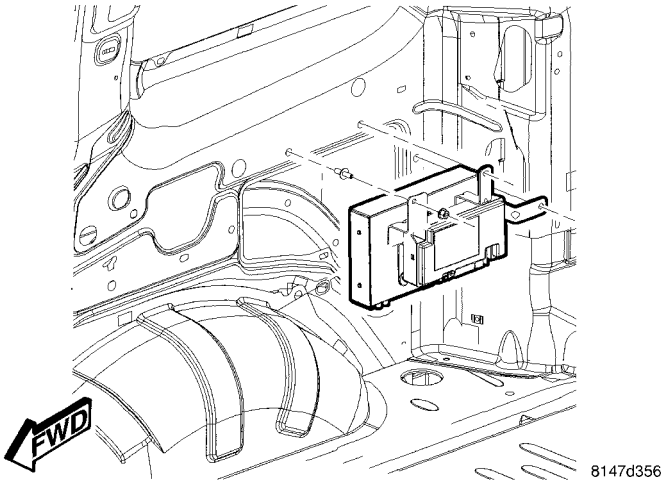

Fig. 23 SATELLITE MODULE MOUNTING

(4) Disconnect electrical harness connector (Fig. 24).

(5) Remove the hands free module from the mounting bracket.

(6) Remove the satellite module mounting fasteners (Fig. 25).

INSTALLATION

(1) Position satellite module to bracket.

(2) Install and tighten mounting fasteners.

(3) Position hands free module to bracket.

(4) Install and tighten mounting fasteners.

(5) Connect electrical harness connectors and antenna cables.

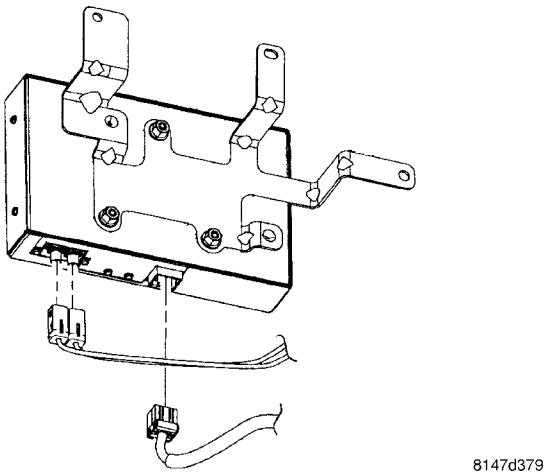

Fig. 24 SATELLITE MODULE CONNECTORS

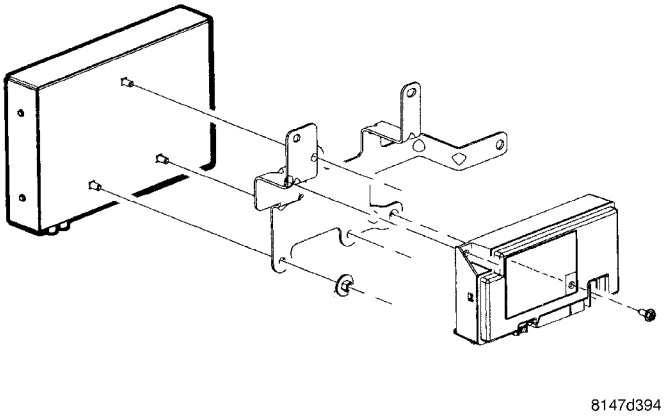

Fig. 25 SATELLITE MODULE TO BRACKET

(6) Position bracket assembly to quarter panel.

(7) Install and tighten mounting fasteners.

(8) Install quarter trim panel.

(9) Connect battery negative cable.

REMOTE SWITCHES

DESCRIPTION

Two rocker-type switches (if equipped) are mounted on the back (instrument panel side) of the steering wheel spokes. The switch on the left spoke is the seek switch and has seek up, seek down, and preset station advance functions. The switch on the right spoke is the volume control switch and has volume up, and volume down functions. The switch on the right spoke also includes a “mode” control that allows the driver to sequentially select AM radio, FM radio, cassette player, CD player or CD changer (if equipped).

REMOTE SWITCHES (Continued)

OPERATION

The six switches in the two remote radio switch units are normally open, resistor multiplexed momentary switches that are hard wired to the Body Control Module (BCM) through the clockspring. The BCM sends a five volt reference signal to both switch units on one circuit, and senses the status of all of the switches by reading the voltage drop on a second circuit.

When the BCM senses an input (voltage drop) from any one of the remote radio switches, it sends the proper switch status messages on the Programmable Communication Interface (PCI) data bus network to the radio receiver. The electronic circuitry within the radio receiver is programmed to respond to these remote radio switch status messages by adjusting the radio settings as requested. For diagnosis of the BCM or the PCI data bus, the use of a DRB scan tool and the proper Diagnostic Procedures manual are recommended.

DIAGNOSIS AND TESTING - REMOTE SWITCHES

Any diagnosis of the Audio system should begin with the use of scan tool. For information on the use of the scan tool, refer to the appropriate Diagnostic information.

For complete circuit diagrams, refer to the appropriate wiring information.

WARNING: DISABLE THE AIRBAG SYSTEM BEFORE ATTEMPTING ANY STEERING WHEEL, STEERING COLUMN, SEAT BELT TENSIONER, SIDE AIRBAG, OR INSTRUMENT PANEL COMPONENT DIAGNOSIS OR SERVICE. DISCONNECT AND ISOLATE THE BATTERY NEGATIVE (GROUND) CABLE, THEN WAIT TWO MINUTES FOR THE AIRBAG SYSTEM CAPACITOR TO DISCHARGE BEFORE PERFORMING FURTHER DIAGNOSIS OR SERVICE. THIS IS THE ONLY SURE WAY TO DISABLE THE AIRBAG SYSTEM. FAILURE TO TAKE THE PROPER PRECAUTIONS COULD RESULT IN ACCIDENTAL AIRBAG DEPLOYMENT AND POSSIBLE PERSONAL INJURY.

(1) Disconnect and isolate the battery negative cable. Remove the remote radio switch(es) from the steering wheel (Refer to 8 - ELECTRICAL/AUDIO/ REMOTE SWITCHES - REMOVAL).

(2) Use an ohmmeter to check the switch resistances as shown in the Remote Radio Switch Test chart. If the remote radio switch resistances check OK, go to Step 3. If not OK, replace the faulty switch.

REMOTE RADIO SWITCH TEST TABLE

Switch	Switch Position	Resistance
Right (White)	Volume Up	1.210 Kilohms ± 1%
Right (White)	Volume Down	3.010 Kilohms ± 1%
Right (White)	Mode Advance	0.0511 Kilohms ± 1%
Left (Black)	Seek Up	0.261 Kilohms ± 1%
Left (Black)	Seek Down	0.681 Kilohms ± 1%
Left (Black)	Pre-Set Station Advance	0.162 Kilohms ± 1%

(3) Reconnect the battery negative cable. Turn the ignition switch to the On position. Check for 5 volts at the radio control mux circuit cavities of the steering wheel wire harness connectors for both remote radio switches. If OK, go to Step 4. If not OK, repair the open or shorted radio control mux circuit to the Body Control Module (BCM) as required.

(4) Disconnect and isolate the battery negative cable. Disconnect the 22-way instrument panel wire harness connector from the BCM. Check for continuity between the remote radio switch ground circuit cavities of the steering wheel wire harness connectors for both remote radio switches and a good ground. There should be no continuity. If OK, go to Step 5. If not OK, repair the shorted remote radio switch ground circuit to the BCM as required.

(5) Check for continuity between the remote radio switch ground circuit cavities of the steering wheel wire harness connectors for both remote radio switches and the 22-way instrument panel wire harness connector for the BCM. There should be continuity. If OK, refer to the proper Diagnostic Procedures manual to test the BCM and the PCI data bus. If not OK, repair the open remote radio switch ground circuit as required.

REMOTE SWITCHES (Continued)

REMOVAL

WARNING: DISABLE THE AIRBAG SYSTEM BEFORE ATTEMPTING ANY STEERING WHEEL, STEERING COLUMN, SEAT BELT TENSIONER, SIDE AIRBAG, OR INSTRUMENT PANEL COMPONENT DIAGNOSIS OR SERVICE. DISCONNECT AND ISOLATE THE BATTERY NEGATIVE (GROUND) CABLE, THEN WAIT TWO MINUTES FOR THE AIRBAG SYSTEM CAPACITOR TO DISCHARGE BEFORE PERFORMING FURTHER DIAGNOSIS OR SERVICE. THIS IS THE ONLY SURE WAY TO DISABLE THE AIRBAG SYSTEM. FAILURE TO TAKE THE PROPER PRECAUTIONS COULD RESULT IN ACCIDENTAL AIRBAG DEPLOYMENT AND POSSIBLE PERSONAL INJURY.

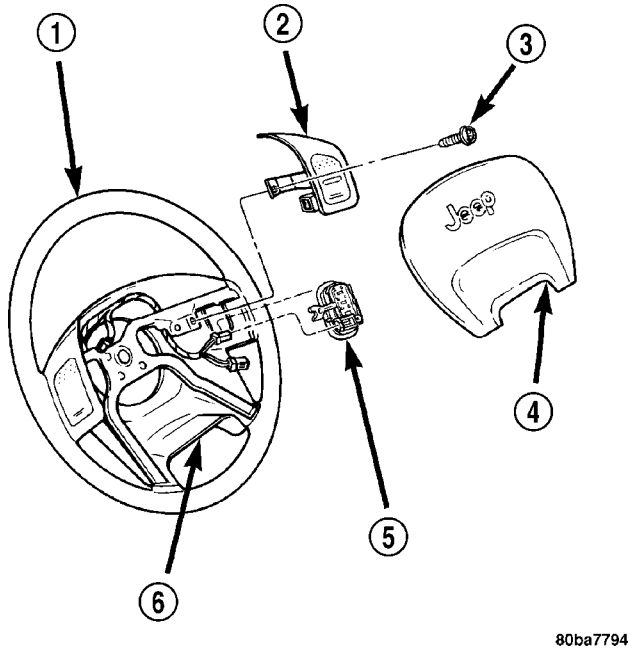

Fig. 26 REMOTE RADIO SWITCHES

(1) Disconnect and isolate the battery negative cable.

(2) Remove the driver side airbag from the vehicle (Refer to 8 - ELECTRICAL/RESTRAINTS/DRIVER AIRBAG - REMOVAL).

(3) Remove the speed control switches (Fig. 26).

(4) Unplug the wire harness connector from the remote radio switch (5).

(5) Depress the tabs on each side of each switch and push the switch through the rear steering wheel cover.

INSTALLATION

WARNING: DISABLE THE AIRBAG SYSTEM BEFORE ATTEMPTING ANY STEERING WHEEL, STEERING COLUMN, SEAT BELT TENSIONER, SIDE AIRBAG, OR INSTRUMENT PANEL COMPONENT DIAGNOSIS OR SERVICE. DISCONNECT AND ISOLATE THE BATTERY NEGATIVE (GROUND) CABLE, THEN WAIT TWO MINUTES FOR THE AIRBAG SYSTEM CAPACITOR TO DISCHARGE BEFORE PERFORMING FURTHER DIAGNOSIS OR SERVICE. THIS IS THE ONLY SURE WAY TO DISABLE THE AIRBAG SYSTEM. FAILURE TO TAKE THE PROPER PRECAUTIONS COULD RESULT IN ACCIDENTAL AIRBAG DEPLOYMENT AND POSSIBLE PERSONAL INJURY.

(1) Install remote radio switch to the steering wheel.

(2) Connect the wire harness to the remote radio switch.

(3) Install the speed control switches.

(4) Install the driver side airbag (Refer to 8 - ELECTRICAL/RESTRAINTS/DRIVER AIRBAG - INSTALLATION).

(5) Connect the battery negative cable.

SPEAKER

DESCRIPTION

STANDARD

The standard equipment speaker system includes speakers in six locations. One 6.4 centimeter (2.50 inch) diameter speaker is installed on each end of the instrument panel top pad. One 16.5 centimeter (6.5 inch) full-range speaker is located in each front door. There is also one full-range 16.5 centimeter (6.5 inch) diameter full-range speaker located in each rear door.

PREMIUM

The optional premium speaker system features six Premium model speakers in six locations. Each of the standard speakers is replaced with Premium model speakers. One 6.4 centimeter (2.50 inch) diameter speaker is installed on each end of the instrument panel top pad. One 16.5 centimeter (6.5 inch) Premium woofer is located in each front door. There is also one full-range 16.5 centimeter (6.5 inch) diameter Premium full-range speaker located in each rear door. The premium speaker system also includes a power amplifier mounted to each front door speaker. The total available power of the premium speaker system is about 160 watts.

OPERATION

Two wires connected to each speaker, one feed circuit (+) and one return circuit (–), allow the audio output signal electrical current to flow through the voice coil. For complete circuit diagrams, refer to the appropriate wiring information. The wiring information includes wiring diagrams, proper wire and con-

SPEAKER (Continued)

nector repair procedures, details of wire harness routing and retention, connector pin-out information and location views for the various wire harness connectors, splices and grounds.

DIAGNOSIS AND TESTING - SPEAKER

Any diagnosis of the Audio system should begin with the use of scan tool. For information on the use of the scan tool, refer to the appropriate Diagnostic information.

Refer to the appropriate wiring information.

WARNING: DISABLE THE AIRBAG SYSTEM BEFORE ATTEMPTING ANY STEERING WHEEL, STEERING COLUMN, SEAT BELT TENSIONER, SIDE AIRBAG, OR INSTRUMENT PANEL COMPONENT DIAGNOSIS OR SERVICE. DISCONNECT AND ISOLATE THE BATTERY NEGATIVE (GROUND) CABLE, THEN WAIT TWO MINUTES FOR THE AIRBAG SYSTEM CAPACITOR TO DISCHARGE BEFORE PERFORMING FURTHER DIAGNOSIS OR SERVICE. THIS IS THE ONLY SURE WAY TO DISABLE THE AIRBAG SYSTEM. FAILURE TO TAKE THE PROPER PRECAUTIONS COULD RESULT IN ACCIDENTAL AIRBAG DEPLOYMENT AND POSSIBLE PERSONAL INJURY.

CAUTION: The speaker output of the radio is a "floating ground" system. Do not allow any speaker lead to short to ground, as damage to the radio may result.

NOTE: If poor sound quality is noted in the audio system, check the Cabin Equalization curve programmed in the BCM. Make sure a base speaker system has the Base Cabin Equalization Curve programmed to the vehicle. If the vehicle has a premium speaker system, make sure the Premium Cabin Equalization Curve is programmed to the vehicle

(1) If all speakers are inoperative, check the fuses in the Junction Block (JB). If OK, go to Step 2. If not OK, repair the shorted circuit or component as required and replace the faulty fuse.

(2) Turn the ignition switch to the ON position. Turn the radio receiver ON. Adjust the balance and fader control controls to check the performance of each individual speaker. Note the speaker locations that are not performing correctly. Go to Step 3.

(3) Turn the radio receiver OFF. Turn the ignition OFF. Disconnect and isolate the battery negative cable. If vehicle is **not** equipped with a amplifier, remove the radio receiver. If vehicle is equipped with an amplifier. disconnect wire harness connector at output side of amplifier. Go to Step 4.

(4) Check both the speaker feed (+) circuit and return (-) circuit cavities for the inoperative speaker at the radio receiver wire harness connector for continuity to ground. There should be no continuity. If OK, go to Step 5. If not OK, repair the shorted speaker feed (+) and/or return (-) circuits(s) to the speaker as required.

(5) Disconnect wire harness connector at the inoperative speaker. Check for continuity between the speaker feed (+) circuit cavities of the radio receiver wire harness connector and the speaker wire harness connector. Repeat the check between the speaker return (-) circuit cavities of the radio receiver wire harness connector and the speaker wire harness connector. In each case, there should be continuity. If OK, replace the faulty speaker. If not OK, repair the open speaker feed (+) and/or return (-) circuits(s) as required.

REMOVAL

FRONT DOOR

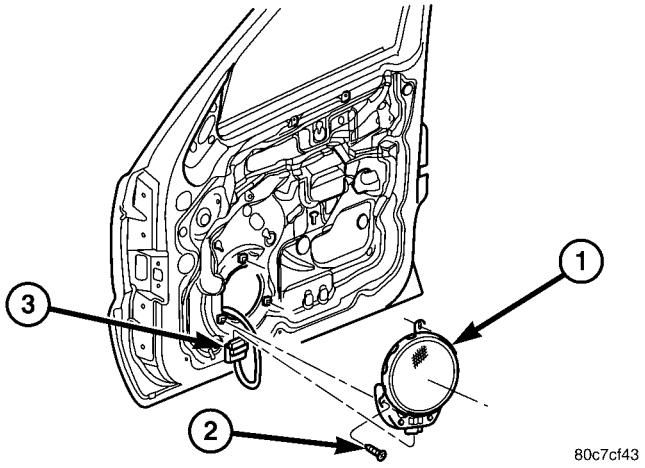

Fig. 27 FRONT DOOR SPEAKER

(1) Disconnect and isolate the battery negative cable.

(2) Remove the front door trim panel (Refer to 23 - BODY/DOOR - FRONT/TRIM PANEL - REMOVAL).

(3) Remove the speaker mounting fasteners (Fig. 27).

(4) Remove the speaker (1) from the door and disconnect the wire harness connector.

INSTRUMENT PANEL

(1) Disconnect and isolate the battery negative cable.

(2) Remove the A-pillar trim (Refer to 23 - BODY/INTERIOR/A-PILLAR TRIM - REMOVAL).

SPEAKER (Continued)

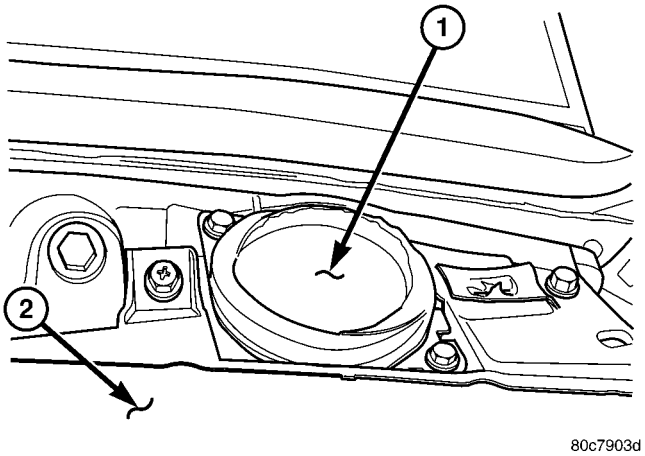

Fig. 28 INSTRUMENT PANEL SPEAKER

(3) Remove instrument panel top cover (Refer to 23 - BODY/INSTRUMENT PANEL/INSTRUMENT PANEL TOP COVER - REMOVAL).

(4) Remove speaker mounting fasteners (Fig. 28).

(5) Remove speaker (1) and disconnect the wire harness connector.

REAR DOOR

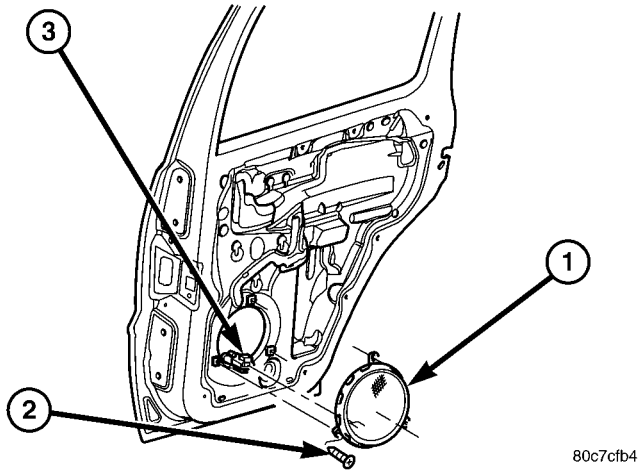

Fig. 29 REAR DOOR SPEAKER

(1) Disconnect and isolate the battery negative cable.

(2) Remove the rear door trim panel (Refer to 23 - BODY/DOORS - REAR/TRIM PANEL - REMOVAL).

(3) Remove the speaker mounting fasteners (Fig. 29).

(4) Remove the speaker (1) from the door and disconnect the wire harness connector (3).

INSTALLATION

FRONT DOOR

(1) Connect the wire harness connector and install the speaker to the door.

(2) Install the speaker mounting screws. Tighten to 2 N·m (20 in. lbs.).

(3) Install the front door trim panel (Refer to 23 - BODY/DOOR - FRONT/TRIM PANEL - INSTALLATION).

(4) Connect the battery negative cable.

INSTRUMENT PANEL

(1) Connect wire harness connector and install speaker.

(2) Install speaker mounting screws. Tighten to 2 N·m (20 in. lbs.).

(3) Install instrument panel top cover (Refer to 23 - BODY/INSTRUMENT PANEL/INSTRUMENT PANEL TOP COVER - INSTALLATION).

(4) Install the A-pillar trim (Refer to 23 - BODY/INTERIOR/A-PILLAR TRIM - INSTALLATION).

(5) Connect the battery negative cable.

REAR DOOR

(1) Connect the wire harness connector and install the speaker to the door.

(2) Install the speaker mounting screws. Tighten to 2 N·m (20 in. lbs.).

(3) Install the rear door trim panel (Refer to 23 - BODY/DOORS - REAR/TRIM PANEL - INSTALLATION).

(4) Connect the battery negative cable.

CHIME/BUZZER

TABLE OF CONTENTS

page

CHIME WARNING SYSTEM
DESCRIPTION 1
OPERATION 1
DIAGNOSIS AND TESTING
CHIME WARNING SYSTEM 5

CHIME WARNING SYSTEM

DESCRIPTION

A chime warning system is standard factory-installed equipment. The chime warning system uses an electromechanical transducer that is soldered onto the electronic circuit board inside of the ElectroMechanical Instrument Cluster (EMIC) to provide audible indications of various vehicle conditions that may require the attention of the vehicle operator or occupants (Fig. 1). The electromechanical transducer is capable of producing both beep tones and chime tones.

The microprocessor-based EMIC utilizes electronic chime request messages received from other modules in the vehicle over the Programmable Communications Interface (PCI) data bus along with hard wired inputs to monitor many sensors and switches throughout the vehicle. In response to those inputs, the circuitry and programming of the EMIC allow it to control the audible outputs that are produced through its on-board transducer.

The EMIC is capable of producing the following audible outputs:

- **Fixed Duration Beep** - A short, sharp, single tactile “beep” tone that is about 150 milliseconds in duration.
- **EVIC Warning Chime** - Two sets of three “beep” tones indicate a warning is being displayed by the Electronic Vehicle Information Center (EVIC) in the overhead console.
- **Single Chime Tone** - A single “bong-like” chime tone.
- **Slow Rate Repetitive Chime** - Repeated chime tones that are issued at a slow rate of about 50 chimes per minute.
- **Fast Rate Repetitive Chime** - Repeated chime tones that are issued at a fast rate of about 180 chimes per minute.

Hard wired circuitry connects the EMIC and the various chime warning system switch and sensor inputs to their modules and to each other through the electrical system of the vehicle. These hard wired circuits are integral to several wire harnesses, which are routed throughout the vehicle and retained by many different methods. These circuits may be connected to each other, to the vehicle electrical system and to the EMIC through the use of a combination of soldered splices, splice block connectors, and many different types of wire harness terminal connectors and insulators. Refer to the appropriate wiring information. The wiring information includes wiring diagrams, proper wire and connector repair procedures, further details on wire harness routing and retention, as well as pin-out and location views for the various wire harness connectors, splices and grounds.

The EMIC chime warning system circuits and components cannot be adjusted or repaired. If the EMIC circuitry or the on-board transducer are damaged or faulty, the EMIC unit must be replaced.

OPERATION

The chime warning system operates on battery voltage received through a fuse in the Junction Block (JB) on a non-switched fused B(+) circuit so that the system may operate regardless of the ignition switch position. The chime warning system also monitors the ignition switch position so that some chime features are functional only with ignition switch in the On position, while others are functional regardless of the ignition switch position.

The chime warning system provides an audible indication to the vehicle operator or occupants under the following conditions:

- **Airbag Indicator Warning** - The ElectroMechanical Instrument Cluster (EMIC) transducer will generate one short chime when the ignition switch is in the On position, and an electronic message is received over the Programmable Communications Interface (PCI) data bus from the Airbag Control Module (ACM) requesting “Airbag” indicator illumination. This warning will only occur following completion of the “Airbag” indicator bulb test, and will only occur once during any ignition cycle.
- **Anti-Lock Brake Indicator Warning** - The EMIC transducer will generate one short chime when the ignition switch is in the On position, and an electronic message is received over the PCI data bus from the Controller Anti-lock Brake (CAB) requesting

CHIME WARNING SYSTEM (Continued)

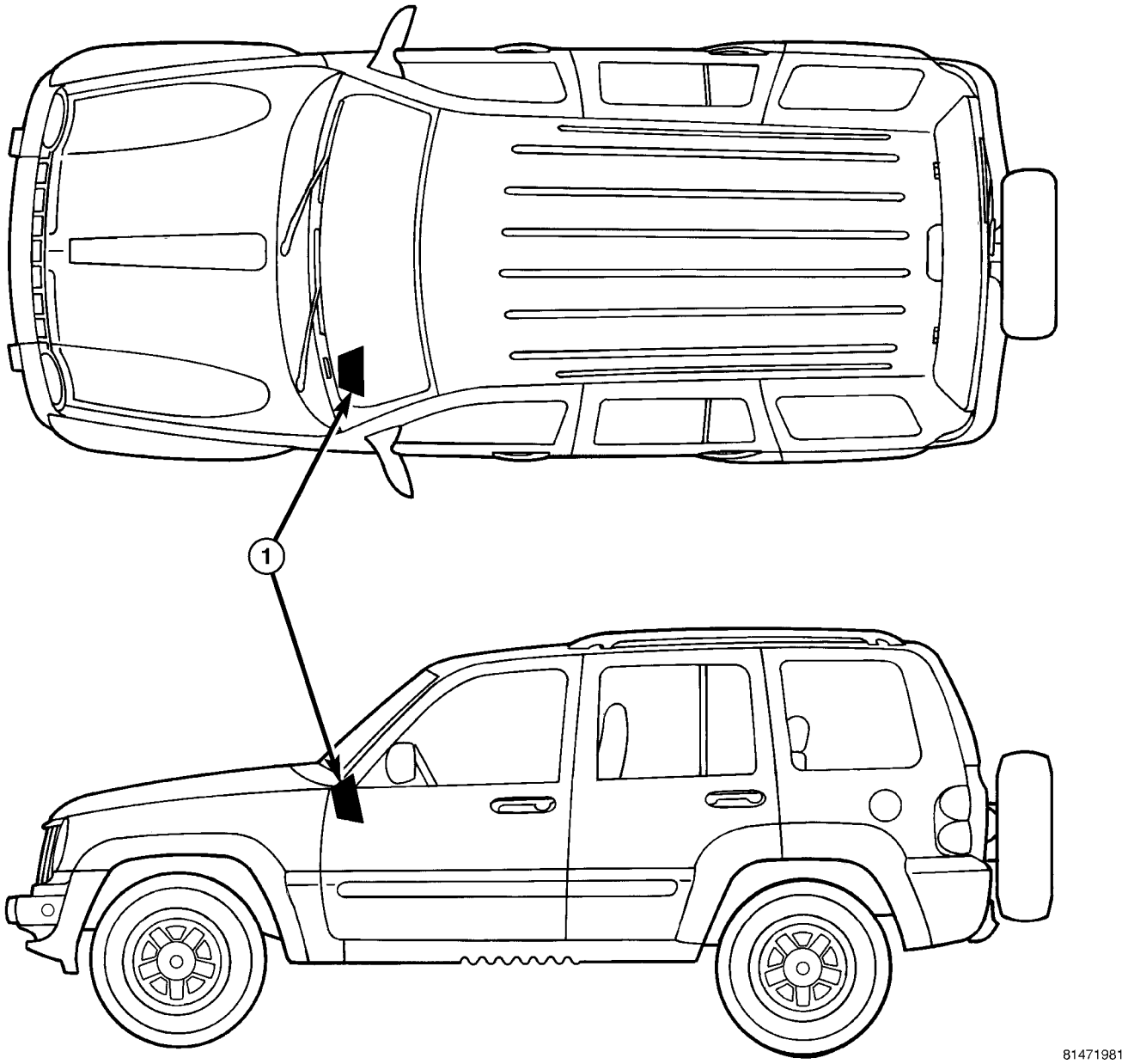

Fig. 1 Chime Warning System

1 - ELECTROMECHANICAL INSTRUMENT CLUSTER

"Antilock Brake System (ABS)" indicator illumination. This warning will only occur following completion of the "ABS" indicator bulb test, and will only occur once during any ignition cycle.

- **Charging Indicator Warning** - Each time the ignition switch is turned to the On position, the EMIC transducer will generate a single chime the first time an electronic message is received over the PCI data bus from the PCM requesting "Charging" indicator illumination. This warning would indicate that the monitored electrical system voltage is either too low or too high.

- **Compass Mini-Trip Computer Global Reset** - The EMIC transducer will generate one short chime when the ignition switch is in the On position, and an electronic message is received over the PCI data bus from the optional Compass Mini-Trip Computer (CMTC) requesting that the CMTC elapsed time, average fuel economy, and/or trip odometer data has been reset. The CMTC monitors hard wired inputs from the U.S./Metric and Reset button switches, and electronic messages received from the Body Control Module (BCM) to determine the proper reset messages to send to the EMIC.

CHIME WARNING SYSTEM (Continued)

• **Door Ajar Indicator Warning** - On vehicles without an Electronic Vehicle Information Center (EVIC), the EMIC transducer will generate one short chime for each of three display sequences when the ignition switch is in the On position, and electronic messages are received over the PCI data bus from the Body Control Module (BCM) indicating that the status of any door ajar input has changed, and from the PCM indicating that the vehicle is moving.

• **Electronic Throttle Control Indicator Warning** - On vehicles equipped with a diesel engine, the EMIC transducer will generate a single chime the first time an electronic message is received over the PCI data bus from the PCM requesting Electronic Throttle Control (ETC) indicator illumination, either solid or flashing. This chime will only occur once during any ignition cycle.

• **Engine Coolant Temperature High Warning** - Each time the ignition switch is turned to the On position, the EMIC transducer will generate chime tones the first time an electronic message is received over the PCI data bus from the PCM indicating that the engine coolant temperature is too high. This chime will sound for five consecutive tones, unless an electronic message is received from the PCM indicating that the engine coolant temperature is not too high, or unless the ignition switch is turned to the Off position before the five tones have completed.

• **Electronic Vehicle Information Center Warning** - On vehicles equipped with an EVIC, the EMIC transducer will generate chimes when an electronic message is received over the PCI data bus from the EVIC indicating that the EVIC is displaying certain warnings.

• **Fasten Seat Belt Indicator Warning** - The EMIC transducer will generate repetitive chimes at a slow rate each time an electronic message is received over the PCI data bus from the ACM requesting “Seatbelt” indicator illumination. This message indicates that the driver side front seat belt is not fastened with the ignition switch in the On position. These chimes will continue to sound for a duration of about six seconds each time the ignition switch is turned to the On position, or until the driver side front seat belt is fastened, whichever occurs first. This audible warning occurs independent of the visual warning provided by the “Seatbelt” indicator. With the “Beltminder” feature enabled, the slow repetitive chimes will also sound while the seatbelt indicator is flashing.

• **Gate Ajar Indicator Warning** - On vehicles without an EVIC, the EMIC transducer will generate one short chime for each of three display sequences when the ignition switch is in the On position, and electronic messages are received over the PCI data bus from the BCM indicating that the status of the tailgate ajar input has changed from closed to not closed, and from the PCM indicating that the vehicle is moving.

• **Glass Ajar Indicator Warning** - On vehicles without an EVIC, the EMIC transducer will generate one short chime for each of two display sequences when the ignition switch is in the On position, and electronic messages are received over the PCI data bus from the BCM indicating that the status of the rear flip-up glass ajar input has changed from closed to not closed, and from the PCM indicating that the vehicle is moving.

• **Head/Park/Fog Lamps-On Warning** - The EMIC transducer will generate repetitive chimes at a fast rate when the ignition switch is in any position except On, and electronic messages are received over the PCI data bus from the BCM indicating that the exterior lamps are On and the driver side front door is opened. The chimes will continue to sound until the exterior lamps are turned Off, the driver side front door is closed, or until the ignition switch is turned to the On position, whichever occurs first.

• **Key-In-Ignition Warning** - The EMIC transducer will generate repetitive chimes at a fast rate when the ignition switch is in any position except On, and electronic messages are received over the PCI data bus from the BCM indicating that the key is in the ignition lock cylinder with the driver side front door opened. These chimes will continue to sound until the key is removed from the ignition lock cylinder, the driver side front door is closed, or the ignition switch is turned to the On position, whichever occurs first.

• **Low Coolant Indicator Warning** - On vehicles equipped with a diesel engine, the EMIC transducer will generate a single chime when the ignition switch is first turned to the On position and a hard wired input from the engine coolant level sensor to the EMIC indicates that the coolant level is low for more than about one-quarter second. Any time after the ignition switch is first turned to the On position, the EMIC uses internal programming to check the status of the engine coolant level sensor inputs about once every second, then adjusts an internal counter up or down based upon the status of this input. When the counter accumulates thirty inputs indicating that the coolant level is low, a single chime is sounded. This strategy is intended to reduce the effect that coolant sloshing within the coolant reservoir can have on reliable chime warning operation. This chime will only occur once during any ignition cycle.

• **Low Fuel Indicator Warning** - Each time the ignition switch is turned to the On position, the EMIC transducer will generate a single chime the first time an electronic message is received over the PCI data bus from the PCM requesting “Low Fuel”

CHIME WARNING SYSTEM (Continued)

indicator illumination. The chime will only occur a second time during the same ignition cycle if another electronic message has been received from the PCM indicating that there is an increase in the fuel level equal to about 3 liters (0.8 gallon), then a subsequent electronic message from the PCM requests "Low Fuel" indicator illumination. This strategy combined with filtering performed by the internal programming of the PCM on the fuel tank sending unit input is intended to reduce the possibility of fuel sloshing within the fuel tank causing multiple low fuel warning chimes during a given ignition cycle. The EMIC will also respond with the low fuel warning chime when electronic fuel level messages are received from the PCM indicating that the hard wired input to the PCM from the fuel tank sending unit is an open circuit (greater than full), or a short circuit (less than empty).

- **Low Oil Pressure Indicator Warning** - Each time the ignition switch is turned to the On position, the EMIC transducer will generate a single chime the first time three sequential sets of electronic messages are received over the PCI data bus from the PCM indicating that the engine oil pressure is too low with the engine running.
- **Low Wash Indicator Warning** - On vehicles without an EVIC, the EMIC transducer will generate one short chime for each of two display sequences when the ignition switch is turned to the On position and a hard wired input from the washer fluid level switch to the EMIC indicates the washer fluid is low for more than about one-quarter second. Any time after the ignition switch is first turned to the On position, the EMIC uses internal programming to check the status of the washer fluid level switch inputs about once every second, then adjusts an internal counter up or down based upon the status of this input. When the counter accumulates thirty inputs indicating that the washer fluid level is low, a single chime is sounded. This strategy is intended to reduce the effect that fluid sloshing within the washer reservoir can have on reliable chime warning operation. This warning will only occur once during any ignition cycle.
- **Overspeed Warning** - The EMIC transducer will generate repetitive chimes at a slow rate when the ignition switch is in the On position, and an electronic message is received over the PCI data bus from the PCM indicating that the vehicle speed is over a pre-programmed speed value. These chimes will continue to sound until the vehicle speed messages are below the pre-programmed speed value, or until the ignition switch is turned to the Off position, whichever occurs first. This feature is only enabled on a BCM that has been programmed with a Middle East Gulf Coast Country (GCC) country code.
- **No Airbag Indicator Message Warning** - The EMIC transducer will generate one short chime and turn on the "Airbag" indicator when the ignition switch is in the On position, and a PCI data bus "Airbag" indicator on or off message is not received from the ACM for six consecutive seconds.
- **No Antilock Brake Indicator Message Warning** - The EMIC transducer will generate one short chime and turn on the "ABS" indicator when the ignition switch is in the On position, and a PCI data bus "ABS" indicator on or off message is not received from the CAB for six consecutive seconds.
- **No Fuel Level Message Warning** - The EMIC transducer will generate one short chime and turn on the "Low Fuel" indicator when the ignition switch is in the On position, and a PCI data bus fuel level message is not received from the PCM for twelve consecutive seconds.
- **Remote Keyless Entry Transmitter Programming** - On vehicles so equipped, the EMIC transducer will generate a single short chime when an electronic message is received over the PCI data bus from the BCM indicating that a Remote Keyless Entry (RKE) transmitter has been successfully programmed by the customer into the RKE module memory.
- **Sentry Key "Customer Learn" Mode Announcement** - On vehicles so equipped, the EMIC transducer will generate one short chime to confirm that an electronic "Customer Learn" message has been received over PCI data bus to indicate that the Sentry Key REmote Entry Module (SKREEM) is prepared for programming additional sentry key transponders. This chime feature is only active on vehicles equipped with the optional Sentry Key system, and sold in a market where "Customer Learn" programming is an allowed feature.
- **Turn Signal On Warning** - The EMIC transducer will generate repetitive chimes at a slow rate to indicate that a turn signal has been active continuously for a distance of about 3.2 kilometers (about two miles). The chime will continue until the turn signal input becomes inactive, until the hazard warning system is turned On, or until the ignition switch is turned to the Off position, whichever occurs first.
- **Water-In-Fuel Indicator Warning** - On vehicles equipped with a diesel engine, each time the ignition switch is turned to the On position, the EMIC transducer will generate a single chime the first time an electronic message is received over the PCI data bus from the PCM requesting "Water-in-Fuel" indicator illumination. This warning will only occur once during any ignition cycle.

The EMIC provides chime service for all available features in the chime warning system. The EMIC relies upon its internal programming, numerous hard

CHIME WARNING SYSTEM (Continued)

wired inputs, and electronic message inputs received from other modules over the PCI data bus network to provide the chime warning system features. The internal programming of the EMIC determines the priority of each chime request input that is received, as well as the rate and duration of each chime that is to be generated.

The hard wired chime warning system inputs to the EMIC, as well as other hard wired circuits for this system may be diagnosed and tested using conventional diagnostic tools and procedures. However, conventional diagnostic methods may not prove conclusive in the diagnosis of the EMIC, the PCI data bus, or the electronic messages received by the EMIC from other modules. The most reliable, efficient, and accurate means to diagnose the EMIC, the PCI data bus, or the electronic message inputs used for the chime warning system requires the use of a diagnostic scan tool. Refer to the appropriate diagnostic information.

DIAGNOSIS AND TESTING

CHIME WARNING SYSTEM

WARNING: To avoid personal injury or death, on vehicles equipped with airbags, disable the supplemental restraint system before attempting any steering wheel, steering column, airbag, occupant classification system, seat belt tensioner, impact sensor, or instrument panel component diagnosis or service. Disconnect and isolate the battery negative (ground) cable, then wait two minutes for the system capacitor to discharge before performing further diagnosis or service. This is the only sure way to disable the supplemental restraint system. Failure to take the proper precautions could result in accidental airbag deployment.

The hard wired chime warning system inputs to the ElectroMechanical Instrument Cluster (EMIC), as well as other hard wired circuits for this system may be diagnosed and tested using conventional diagnostic tools and procedures. Refer to the appropriate wiring information. The wiring information includes wiring diagrams, proper wire and connector repair procedures, details of wire harness routing and retention, connector pin-out information and location views for the various wire harness connectors, splices and grounds.

However, conventional diagnostic methods may not prove conclusive in the diagnosis of the EMIC, the Programmable Communications Interface (PCI) data bus, or the electronic message inputs used by the EMIC to provide chime warning system service. The most reliable, efficient, and accurate means to diagnose the EMIC, the PCI data bus, and the electronic message inputs for the chime warning system requires the use of a diagnostic scan tool. Refer to the appropriate diagnostic information.

ELECTRONIC CONTROL MODULES

TABLE OF CONTENTS

page

ELECTRONIC CONTROL MODULES
STANDARD PROCEDURE - PCM/SKREEM PROGRAMMING 1
ANTILOCK BRAKE MODULE
DESCRIPTION 2
OPERATION 3
REMOVAL 3
INSTALLATION 4
BODY CONTROL MODULE
DESCRIPTION 5
OPERATION 7
DIAGNOSIS AND TESTING BODY CONTROL MODULE 9
REMOVAL 9
INSTALLATION 10
COMMUNICATION
DESCRIPTION 10
OPERATION 10
DATA LINK CONNECTOR
DESCRIPTION 11
OPERATION 12
FRONT CONTROL MODULE
DESCRIPTION 12
REMOVAL 12
INSTALLATION 12
ENGINE CONTROL MODULE-DIESEL ENGINE
DESCRIPTION 13
OPERATION 13
STANDARD PROCEDURE - PCM/ECM/SKIM PROGRAMMING - DIESEL 14
REMOVAL 16
INSTALLATION 16
POWERTRAIN CONTROL MODULE
DESCRIPTION
DESCRIPTION - PCM 16
DESCRIPTION - MODES OF OPERATION . . . 16
DESCRIPTION - 5 VOLT SUPPLIES 19
DESCRIPTION - IGNITION CIRCUIT SENSE . 19
DESCRIPTION - POWER GROUNDS 19
DESCRIPTION - SENSOR RETURN 19
OPERATION
OPERATION - PCM 19
OPERATION - 5 VOLT SUPPLIES 20
OPERATION - IGNITION CIRCUIT SENSE . . . 20
REMOVAL 20
INSTALLATION 21
TRANSMISSION CONTROL MODULE
DESCRIPTION
TRANSMISSION CONTROL MODULE - GASOLINE ENGINES 21
TRANSMISSION CONTROL MODULE - DIESEL ENGINE 21
OPERATION
TRANSMISSION CONTROL MODULE - GASOLINE ENGINES 21
TRANSMISSION CONTROL MODULE - DIESEL ENGINE 24
STANDARD PROCEDURE
TCM QUICK LEARN 26
DRIVE LEARN 26
HEATED SEAT MODULE
DESCRIPTION 28
OPERATION 29
DIAGNOSIS AND TESTING - HEATED SEAT MODULE 29
REMOVAL 31
INSTALLATION 31

ELECTRONIC CONTROL MODULES

STANDARD PROCEDURE - PCM/SKREEM PROGRAMMING

NOTE: Before replacing the Powertrain Control Module (PCM), be certain to check the related component/circuit integrity for failures not detected due to a double fault in the circuit. Most PCM driver/control circuit failures are caused by internal component failures (i.e. relays and solenoids) and shorted circuits (i.e. pull-ups, drivers, and switched circuits). These failures are difficult to detect when a double fault has occurred and only one DTC has been set.

When a Powertrain Control Module (PCM) and the Sentry Key REmote Entry Module (SKREEM) on vehicles equipped with the Sentry Key Immobilizer System (SKIS) are replaced at the same time, perform the following steps in order:

(1) Program the new PCM.

(2) Program the new SKREEM (also sometimes referred to as the Wireless Control Module or WCM).

(3) Replace all ignition keys and program them into the new SKREEM/WCM.

PROGRAMMING THE PCM/SKREEM

The SKIS Secret Key is an ID code that is unique to each SKREEM/WCM. This code is programmed and stored in the SKREEM/WCM, the PCM, and each ignition key transponder chip. When the PCM or SKREEM/WCM is replaced, it is necessary to program the Secret Key into the new module using a diagnostic scan tool. Follow the programming steps outlined in the diagnostic scan tool for "PCM Replaced" or "WCM Replaced" under "Miscellaneous Functions" for the "WCM/Wireless Control Module" menu item as appropriate.

NOTE: Be certain to enter the correct country code for the SKREEM/WCM. If the incorrect country code is programmed into the SKREEM, it cannot be changed and the SKREEM must be replaced.

NOTE: If the PCM and the SKREEM/WCM are replaced at the same time, all vehicle ignition keys will need to be replaced and new keys programmed into the new SKREEM/WCM.

NOTE: Programming the PCM or SKREEM is done using a diagnostic scan tool and a PIN to enter secure access mode. If three attempts are made to enter secure access mode using an incorrect PIN, secure access mode will be locked out for one hour. To exit this lockout mode, turn the ignition to the RUN position for one hour then enter the correct PIN. (Ensure all accessories are turned OFF. Also monitor the battery state and connect a battery charger if necessary).

PROGRAMMING IGNITION KEYS TO THE SKREEM

Each ignition key transponder also has a unique ID code that is assigned at the time the key is manufactured. When a key is programmed into the SKREEM/WCM, the transponder ID code is learned by the module and the transponder acquires the unique Secret Key ID code from the SKREEM/WCM. To program ignition keys into the SKREEM/WCM, follow the programming steps outlined in the diagnostic scan tool for "Program Ignition Keys or Key FOBs" under "Miscellaneous Functions" for the "WCM/Wireless Control Module" menu item.

NOTE: A maximum of eight keys can be learned to each SKREEM. Once a key is learned to a SKREEM, that key has acquired the Secret Key for that SKREEM and cannot be transferred to any other SKREEM or vehicle.

If ignition key programming is unsuccessful, the scan tool will display one of the following error messages:

- **Programming Not Attempted** - The scan tool attempts to read the programmed key status and there are no keys programmed into SKREEM memory.
- **Programming Key Failed (Possible Used Key From Wrong Vehicle)** - SKREEM is unable to program an ignition key transponder due to one of the following:
  - The ignition key transponder is faulty.
  - The ignition key transponder is or has been already programmed to another vehicle.
- **8 Keys Already Learned, Programming Not Done** - The SKREEM transponder ID memory is full.
- **Learned Key In Ignition** - The ID for the ignition key transponder currently in the ignition lock cylinder is already programmed into SKREEM memory.

ANTILOCK BRAKE MODULE

DESCRIPTION

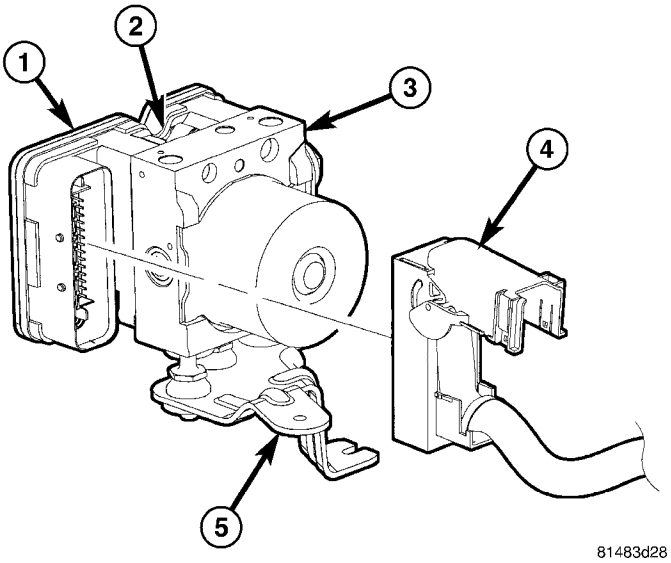

Fig. 1 ABM HARNESS CONNECTOR

1 - ABM MODULE
2 - ABM MODULE MOUNTING SCREWS
3 - ABM UNIT
4 - ELECTRICAL CONNECTOR
5 - MOUNTING BRACKET

The Antilock Brake Module (ABM) (1) is mounted to the Hydraulic Control Unit (HCU) (3) and operates the ABS system (Fig. 1).

ANTILOCK BRAKE MODULE (Continued)

OPERATION

The ABM voltage source is through the ignition switch in the RUN position. The ABM contains dual microprocessors. A logic block in each microprocessor receives identical sensor signals. These signals are processed and compared simultaneously. The ABM contains a self check program that illuminates the ABS warning light when a system fault is detected. Faults are stored in a diagnostic program memory and are accessible with the DRB scan tool. ABS faults remain in memory until cleared, or until after the vehicle is started approximately 50 times. Stored faults are **not** erased if the battery is disconnected.

REMOVAL

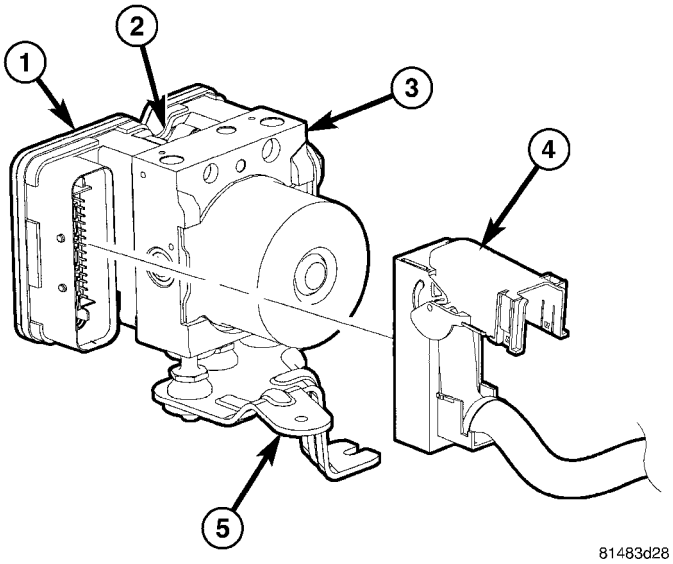

Fig. 2 ABM HARNESS CONNECTOR

1 - ABM MODULE
2 - ABM MODULE MOUNTING SCREWS
3 - ABM UNIT
4 - ELECTRICAL CONNECTOR
5 - MOUNTING BRACKET

(1) Remove the negative battery cable from the battery.

(2) Pull up on the ABM harness connector (4) release (Fig. 2) and remove connector.

(3) Remove the pump connector from the ABM.

(4) Remove the brake lines (1) from the ABM (2).

(5) Remove the ABM (2) mounting nuts (3) (Fig. 3).

(6) Remove the ABM unit from the vehicle.

(7) Remove the ABM module (1) mounting screws (2) from the ABM unit (3) (Fig. 4) (Refer to 5 - BRAKES/HYDRAULIC/MECHANICAL/HCU (HYDRAULIC CONTROL UNIT) - DISASSEMBLY).

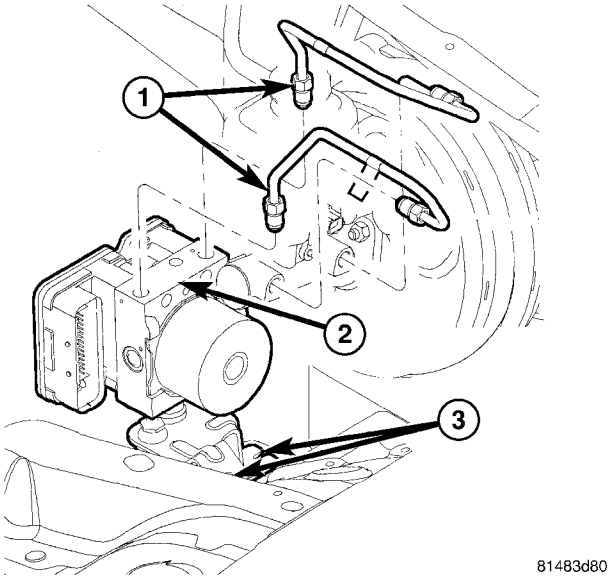

Fig. 3 ABM MOUNTING

1 - BRAKE LINES
2 - ABM UNIT
3 - MOUNTING NUTS

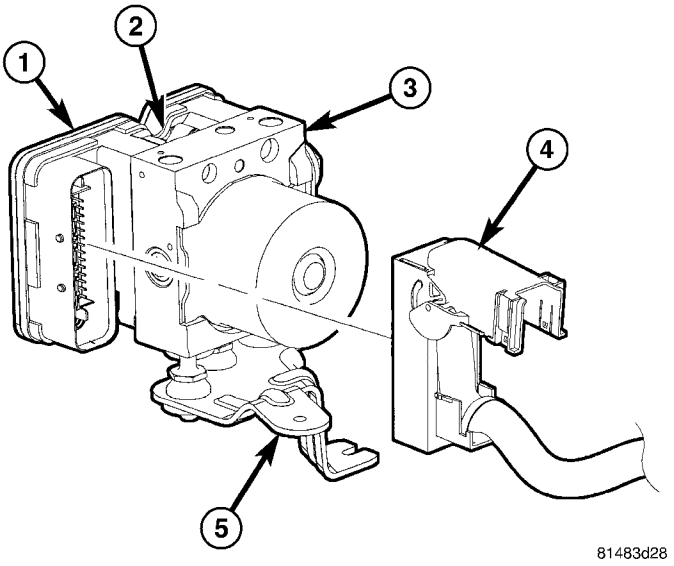

Fig. 4 ABM HARNESS CONNECTOR

1 - ABM MODULE
2 - ABM MODULE MOUNTING SCREWS
3 - ABM UNIT
4 - ELECTRICAL CONNECTOR
5 - MOUNTING BRACKET

ANTILOCK BRAKE MODULE (Continued)

INSTALLATION

NOTE: If the ABM module (1) is being replaced with a new ABM module it must be reprogrammed with the use of a scan tool.

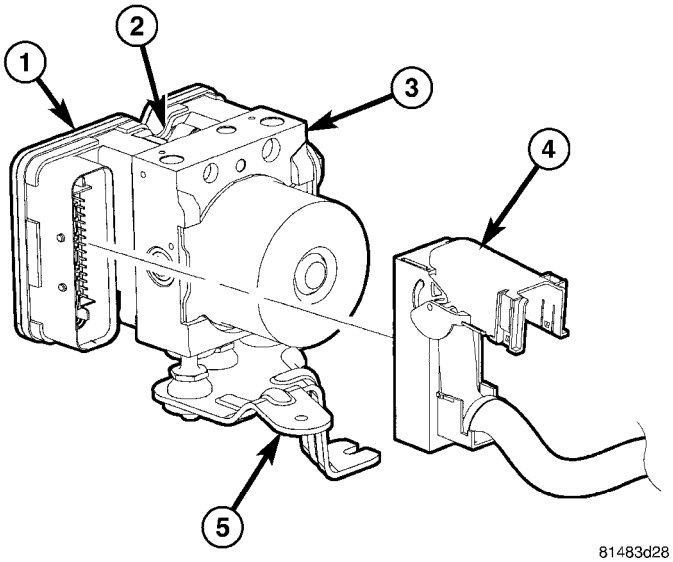

Fig. 5 ABM HARNESS CONNECTOR

1 - ABM MODULE
2 - ABM MODULE MOUNTING SCREWS
3 - ABM UNIT
4 - ELECTRICAL CONNECTOR
5 - MOUNTING BRACKET

(1) Install ABM module (1) to the ABM unit (3) (Fig. 5) (Refer to 5 - BRAKES/HYDRAULIC/MECHANICAL/HCU (HYDRAULIC CONTROL UNIT) - ASSEMBLY).

(2) Install mounting screws (2) (Fig. 5). Tighten to 2 N·m (16 in. lbs.).

(3) Install the ABM unit (2) (Fig. 6) to the vehicle.

(4) Install the ABM mounting bracket nuts (3) (Fig. 6) and tighten to 14.1 N·m (125 in. lbs.).

(5) Install brake lines (1) (Fig. 6) to the ABM (2) and tighten to 20 N·m (180 in. lbs.).

(6) Install the wiring harness connector (4) (Fig. 7) to the ABM and push down on the release to secure the connector.

(7) Install negative battery cable to the battery.

(8) Bleed ABS brake system (Refer to 5 - BRAKES - STANDARD PROCEDURE).

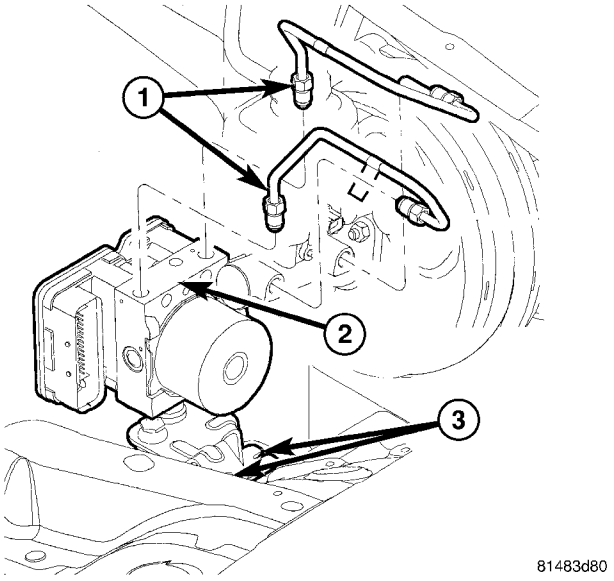

Fig. 6 ABM MOUNTING

1 - BRAKE LINES
2 - ABM UNIT
3 - MOUNTING NUTS

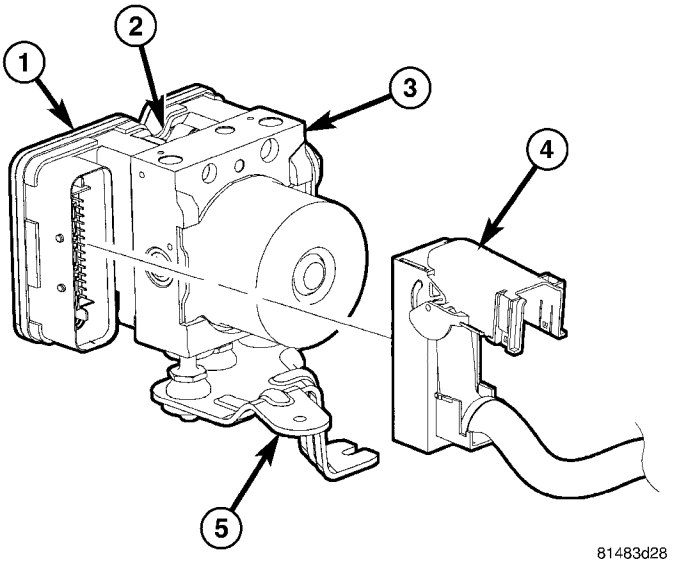

Fig. 7 ABM HARNESS CONNECTOR

1 - ABM MODULE
2 - ABM MODULE MOUNTING SCREWS
3 - ABM UNIT
4 - ELECTRICAL CONNECTOR
5 - MOUNTING BRACKET

BODY CONTROL MODULE

DESCRIPTION

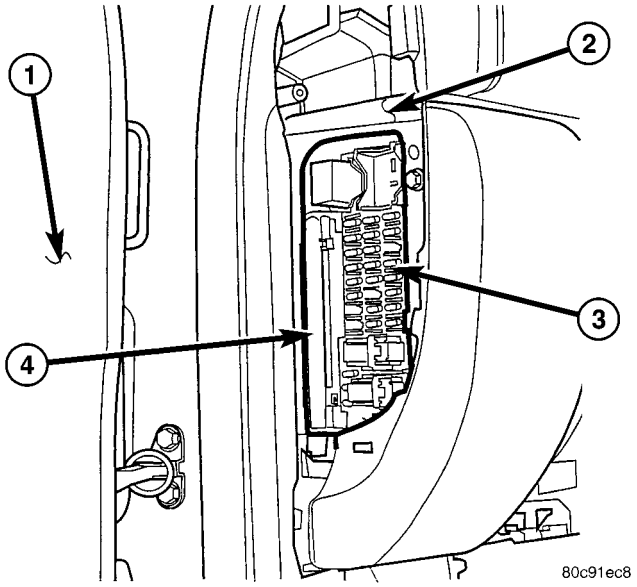

Fig. 8 Body Control Module Location

1 - DRIVER DOOR
2 - INSTRUMENT PANEL END BRACKET
3 - JUNCTION BLOCK
4 - BODY CONTROL MODULE

A Body Control Module (BCM) is concealed behind the driver side end of the instrument panel in the passenger compartment, where it is secured to the fuse panel side of the Junction Block (JB) (Fig. 8) with four screws. The JB is the interface between the body, the instrument panel, and the headlamp and dash wire harnesses. The JB also contains the fuses and relays used for the interior electrical system of the vehicle.

The BCM is enclosed in a molded plastic housing with two integral external connectors that connect it to the vehicle electrical system through two take outs with connectors from the instrument panel wire harness (Fig. 9). The BCM also has an integral interface connector that joins it through a connector receptacle that is integral to the JB housing to the circuitry within the JB. This connector is referred to as the JB-BCM connector. The combined BCM and JB are sometimes referred to as the Junction Block Module (JBM).

The BCM utilizes integrated circuitry and information carried on the Programmable Communications Interface (PCI) data bus along with many hard wired inputs to monitor numerous sensor and switch inputs throughout the vehicle. In response to those inputs, the internal circuitry and programming of the BCM allow it to control and integrate many electronic functions and features of the vehicle through both

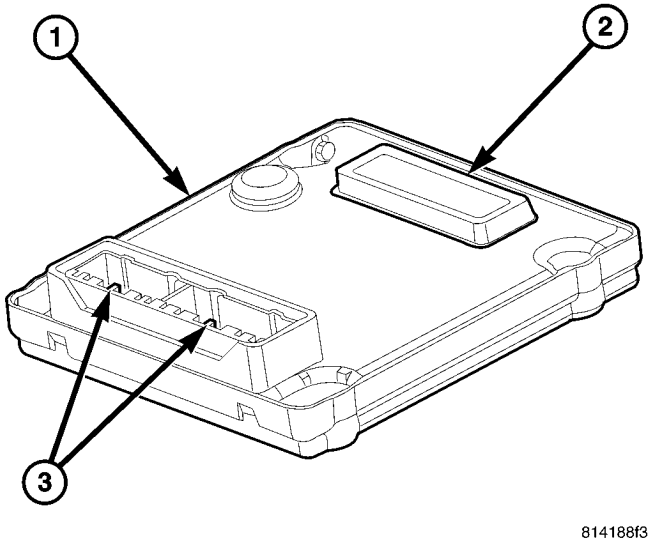

Fig. 9 Body Control Module

1 - BODY CONTROL MODULE
2 - JB-BCM CONNECTOR
3 - CONNECTOR RECEPTACLE (2)

hard wired outputs and the transmission of electronic message outputs to other electronic modules in the vehicle over the PCI data bus.

The electronic functions and features that the BCM supports or controls include the following:

- **A/C Select Switch Status** - The BCM monitors an input from, and transmits the status of the A/C switch in the heater-A/C control.
- **Audio System Cabin Equalization** - The BCM stores the cabin equalization curves for numerous optional speaker architectures for use by the radio. The equalization curve information allows the radio to optimize sound output for the unique combination of cabin and speaker architecture found within the vehicle. The BCM provides this information when requested by the radio over the PCI data bus.
- **Cargo Lamp Disable** - The BCM monitors an input from the cargo lamp switch to provide an interior lighting disable feature.
- **Chimes** - The chime tone transducer is located on the ElectroMechanical Instrument Cluster (EMIC) circuit board, but the EMIC goes to sleep with the ignition switch in the Off position. The BCM provides a wake-up output to the EMIC based upon inputs from the key-in ignition switch or the exterior lighting switch, then sends electronic chime request messages to the EMIC for the headlamps-on warning and key-in ignition warning.
- **Door Lock Inhibit** - The BCM monitors the key-in ignition switch and the driver side front door ajar switch to provide a door lock inhibit feature.

BODY CONTROL MODULE (Continued)

• **Electronic Pinion Factor** - On vehicles without the optional Antilock Brake System (ABS) the BCM provides a source voltage to the rear wheel speed sensor and monitors a returned vehicle speed signal input. The BCM is able to use the vehicle speed signal input to accurately calculate vehicle speed and distance information by applying an electronic pinion factor. This factor is based upon either a pre-programmed tire size or a Tire Revolutions per Mile (TIRE REV/MILE) value that compensates for multiple optional axle ratios and tire diameters. The correct electronic pinion factor **must** be programmed into the BCM using a diagnostic scan tool in order for the vehicle speed and distance information to be accurate. The BCM then transmits the correct vehicle speed information over the PCI data bus for use by the EMIC for control of the speedometer and odometer.

• **Enhanced Accident Response Support** - The BCM monitors an input from the Airbag Control Module (ACM) and, five seconds after a front or side airbag deployment will unlock all doors by activating the power unlock output if the power lock switch input remains inactive for two seconds. The BCM also turns on the interior lighting after an airbag deployment event, five seconds after the vehicle speed is zero. The interior lighting remains illuminated until the ignition switch is turned to the Off position, at which time the interior lighting returns to normal operation and control. These Enhanced Accident Response System (EARS) features are each dependent upon a functional vehicle electrical system following the vehicle impact event.

• **Exterior Lamp Load Shedding** - The BCM provides a battery saver feature which will automatically turn off exterior lamps that remain on after a timed interval.

• **Exterior Lamp Status** - The BCM monitors the status of the park lamp, low beam, high beam or Daytime Running Lamp (DRL - Canada only), front fog lamp (optional), and rear fog lamp (in required markets only) relays.

• **Exterior Lighting Control** - The BCM provides exterior lamp control for standard head and park lamps, as well as Daytime Running Lamps (DRL - Canada only), front fog lamps (optional), and rear fog lamps (in required markets only). This includes support for features including optical horn (also known as flash-to-pass) and headlamp time delay.

• **Flip-Up Glass Control** - The BCM monitors inputs from the tailgate cylinder lock switch, the tailgate handle switch, the Remote Keyless Entry (RKE) system and the rear wiper switch to provide control for the rear flip-up glass actuator.

• **Fog Lamp Control** - The BCM provides fog lamp control for front fog lamps (optional), and rear fog lamps (in required markets only).

• **Front Wiper System Status** - The BCM monitors the status of the front wiper motor park switch.

• **Fuel Economy and Distance to Empty Calculations** - The BCM calculates and transmits the fuel ECOnomy (ECO) and Distance To Empty (DTE) data.

• **Headlamp Time Delay** - The BCM provides a headlamp time delay feature with the ignition switch in the Off position.

• **Heated Rear Glass Control** - The BCM provides control and timer functions for the heated rear glass feature and transmits the system status.

• **Ignition On/Off Timer** - The BCM monitors and transmits the elapsed ignition On timer data and monitors the ignition Off time.

• **Ignition Switch Position Status** - The BCM monitors and transmits the status of the ignition switch.

• **Instrument Panel Dimming** - The BCM monitors and transmits the selected illumination intensity level of the panel lamps dimmer switch.

• **Interior Lamp Load Shedding** - The BCM provides a battery saver feature which will automatically turn off all interior lamps that remain on after a timed interval.

• **Interior Lighting Control** - The BCM monitors inputs from the interior lighting switch, the door ajar switches, the flip-up glass ajar switch, the tailgate ajar switch, the cargo lamp switch, the reading lamp switches, and the RKE system to provide courtesy lamp control. This includes support for timed illuminated entry with theater-style fade-to-off and courtesy illumination defeat features.

• **Intermittent Wipe and Front Wiper System Control** - The BCM monitors inputs from the front wiper and washer switch and the front wiper motor park switch to provide front wiper system control through the wiper on/off and high/low relays. This includes support for adjustable intermittent wipe, mist wipe (also known as pulse wipe), and wipe-after-wash features.

• **Key-In-Ignition Switch Status** - The BCM monitors and transmits the status of the key-in-ignition switch.

• **Panic Mode** - The BCM provides support for the RKE system panic mode feature.

• **Parade Mode** - The BCM provides a parade mode (also known as funeral mode) that allows the interior Vacuum Fluorescent Displays (VFD) to be illuminated at full intensity while driving in daylight with the exterior lamps On.

• **Power Locks** - The BCM monitors inputs from the power lock switches and the RKE system to pro-

BODY CONTROL MODULE (Continued)

vide control of the power lock motors through outputs to the lock, unlock, and driver unlock relays. This includes support for rolling door locks (also known as automatic door locks) and a door lock inhibit mode.

- **Programmable Features** - The BCM provides support for several standard and optional programmable features, including: rolling door locks, headlamp time delay interval, RKE driver-door-only or unlock-all-doors, RKE optical chirp, and RKE audible chirp.
- **Remote Keyless Entry** - The BCM provides support for the RKE system features, including support for the RKE Lock, Unlock (with optional driver-door-only unlock, and unlock-all-doors), rear flip-up glass control, Panic, audible chirp, optical chirp, and illuminated entry modes.
- **Rolling Door Locks** - The BCM provides support for the power lock system rolling door locks feature (also known as automatic door locks).
- **Tailgate and Flip-Up Glass Ajar Status** - The BCM monitors and transmits the status of the tailgate and rear flip-up glass ajar switches.
- **Remote Radio Switch Interface** - The BCM monitors and transmits the status of the optional remote radio switches.
- **Self-Diagnostics** - The BCM provides support for diagnostics through communication with a diagnostic scan tool over the PCI data bus network. Each analog and digital input can be verified, and each output can be actuated through the use of this diagnostic protocol. The BCM also stores Diagnostic Trouble Codes (DTCs) to assist in the troubleshooting of this unit.
- **Vacuum Fluorescent Display Synchronization** - The BCM transmits panel lamp intensity data which allows modules with Vacuum Fluorescent Displays (VFD) to coordinate their illumination intensity.
- **Vehicle Theft Security System** - The BCM monitors inputs from the door ajar switches, the tailgate ajar switch, the flip-up glass ajar switch, the hood ajar switch (in required markets only), and the RKE system to control the features of the optional Vehicle Theft Security System (VTSS).

Hard wired circuitry connects the BCM to the electrical system of the vehicle. These hard wired circuits are integral to several wire harnesses, which are routed throughout the vehicle and retained by many different methods. These circuits may be connected to each other, to the vehicle electrical system and to the BCM through the use of a combination of soldered splices, splice block connectors, and many different types of wire harness terminal connectors and insulators. Refer to the appropriate wiring information. The wiring information includes wiring diagrams, proper wire and connector repair procedures, further details on wire harness routing and retention, as well as pin-out and location views for the various wire harness connectors, splices and grounds.

Many of the electronic features in the vehicle controlled or supported by the BCM are programmable using a customer programming procedure or a diagnostic scan tool. In addition, the BCM software is Flash compatible, which means it can be reprogrammed using Flash reprogramming procedures. However, if any of the BCM hardware is damaged or faulty, the entire BCM unit must be replaced.

OPERATION

The microprocessor-based Body Control Module (BCM) monitors many hard wired switch and sensor inputs as well as those resources it shares with other electronic modules in the vehicle through its communication over the Programmable Communications Interface (PCI) data bus network. The internal programming and all of these inputs allow the BCM microprocessor to determine the tasks it needs to perform and their priorities, as well as both the standard and optional features that it should provide. The BCM programming then performs those tasks and provides those features through both PCI data bus communication with other electronic modules and through hard wired outputs through a number of driver circuits, relays, and actuators. These outputs allow the BCM the ability to control numerous accessory systems in the vehicle.

The BCM operates on battery and ignition voltage inputs received through several fuses in the Junction Block (JB) on a non-switched fused B(+) circuit, through another fuse in the JB on a fused ignition switch output (run-start) circuit, and through a third fuse in the JB on a fused ignition switch output (run-acc) circuit. This arrangement allows the BCM to provide some features regardless of the ignition switch position, while other features will operate only with the ignition switch in the On, Start, and/or Accessory positions. All of the battery voltage circuits are connected to the BCM through the JB/BCM connector.

The BCM receives ground through five separate circuits. Three of these circuits are connected to the BCM through a connector of the instrument panel wire harness on three separate ground circuits, while the other two circuits are connected to the BCM through the JB/BCM connector. Each of these circuits receives a path to ground through the instrument panel wire harness with an eyelet terminal connector that is secured by a nut to a ground stud on the driver side instrument panel end bracket near the JB.

The BCM monitors its own internal circuitry as well as many of its input and output circuits, and

will store a Diagnostic Trouble Code (DTC) in electronic memory for any failure it detects. These DTCs can be retrieved and diagnosed using a diagnostic scan tool. Refer to the appropriate diagnostic information.

INPUT AND OUTPUT CIRCUITS

HARD WIRED INPUTS

The hard wired inputs to the BCM include the following:

- **A/C on/off control**
- **BCM flash enable**
- **Door lock switch mux**
- **Driver door ajar switch sense**
- **Flip-up glass ajar switch sense**
- **Flip-up glass release switch sense**
- **Front fog lamp switch sense**
- **Front wiper park switch sense**
- **Front wiper switch mux**
- **Fused B(+)**
- **Fused ignition switch output (run-acc)**
- **Fused ignition switch output (run-start)**
- **Headlamp switch mux**
- **High beam switch sense**
- **Hood ajar switch sense - with VTSS - in markets where required only**
- **Key-in ignition switch sense**
- **Left rear door ajar switch sense**
- **Lightbar switch sense - Renegade with light bar only**
- **Panel lamps dimmer switch mux**
- **Passenger front door ajar switch sense**
- **Radio control mux - with remote radio switches only**
- **Rear courtesy lamp control**
- **Rear window defogger control**
- **Rear wiper intermittent driver**
- **Rear wiper on driver**
- **RHD input - connected to ground on right-hand drive models only**
- **Right rear door ajar switch sense**
- **Tailgate ajar switch sense**
- **Washer pump driver**
- **Vehicle speed signal**

Refer to the appropriate wiring information for additional details.

HARD WIRED OUTPUTS

The hard wired outputs of the BCM include the following:

- **Accessory delay relay control - power sunroof only**
- **Courtesy lamp driver**
- **Courtesy lamp load shed**
- **Door lock relay control**
- **Door unlock relay control**
- **Driver door unlock relay control**
- **Flip-up glass release motor driver**
- **Front fog lamp relay control**
- **Front wiper high/low relay control**
- **Front wiper on/off relay control**
- **Fused B(+) - lock, unlock and driver unlock relay feed**
- **Hazard lamp control**
- **High beam relay control**
- **Horn relay control**
- **Instrument cluster wake up signal**
- **Low beam relay control**
- **Park lamp relay control**
- **Rear fog lamp relay control - with rear fog lamps in markets where required only**
- **Rear window defogger relay control**
- **Tailgate lock driver**
- **Tailgate unlock driver**
- **Vehicle speed output**
- **Vehicle speed sensor supply - except with Antilock Brake System (ABS)**
- **VTSS indicator driver - with VTSS only**

Refer to the appropriate wiring information for additional details.

GROUNDS

The BCM receives ground through five separate circuits, and also supplies a clean ground path to several switches through the following hard wired circuits:

- **Door lock switch ground**
- **Multifunction switch ground**
- **Radio control mux return**
- **Tailgate switch ground**

Refer to the appropriate wiring information for additional details.

COMMUNICATION

The BCM has the following communication circuits:

- **PCI bus**

Refer to the appropriate wiring information for additional details.

BODY CONTROL MODULE (Continued)

DIAGNOSIS AND TESTING

BODY CONTROL MODULE

WARNING: To avoid personal injury or death, on vehicles equipped with airbags, disable the supplemental restraint system before attempting any steering wheel, steering column, airbag, occupant classification system, seat belt tensioner, impact sensor, or instrument panel component diagnosis or service. Disconnect and isolate the battery negative (ground) cable, then wait two minutes for the system capacitor to discharge before performing further diagnosis or service. This is the only sure way to disable the supplemental restraint system. Failure to take the proper precautions could result in accidental airbag deployment.

The hard wired inputs to and outputs from the Body Control Module (BCM), as well as other hard wired circuits for this module may be diagnosed and tested using conventional diagnostic tools and procedures. Refer to the appropriate wiring information. The wiring information includes wiring diagrams, proper wire and connector repair procedures, details of wire harness routing and retention, connector pinout information and location views for the various wire harness connectors, splices and grounds.

However, conventional diagnostic methods may not prove conclusive in the diagnosis of the BCM, the Programmable Communications Interface (PCI) data bus, or the electronic messages received and transmitted by the BCM over the PCI data bus. The most reliable, efficient, and accurate means to diagnose the BCM, the PCI data bus and the electronic message inputs to and outputs from this module requires the use of a diagnostic scan tool. Refer to the appropriate diagnostic information.

REMOVAL

WARNING: To avoid personal injury or death, on vehicles equipped with airbags, disable the supplemental restraint system before attempting any steering wheel, steering column, airbag, occupant classification system, seat belt tensioner, impact sensor, or instrument panel component diagnosis or service. Disconnect and isolate the battery negative (ground) cable, then wait two minutes for the system capacitor to discharge before performing further diagnosis or service. This is the only sure way to disable the supplemental restraint system. Failure to take the proper precautions could result in accidental airbag deployment.

NOTE: Before replacing a Body Control Module (BCM), use a diagnostic scan tool to retrieve the current settings for the many BCM programmable features including electronic pinion factor (tire size), cabin equalization curve (audio system architecture), country code and Remote Keyless Entry (RKE) system preferences. These settings MUST be programmed into the replacement BCM using the diagnostic scan tool before returning the vehicle to service. A new BCM is shipped in default mode that may prevent proper speedometer indications and the availability of numerous electronic features until it has been properly programmed. Refer to the appropriate diagnostic information.

(1) Disconnect and isolate the negative battery cable.

(2) Remove the Junction Block Module (JBM) from the instrument panel end bracket on the driver side of the vehicle. (Refer to 8 - ELECTRICAL/POWER DISTRIBUTION/JUNCTION BLOCK - REMOVAL).

(3) Remove the four screws that secure the BCM to the Junction Block (JB) (Fig. 10).

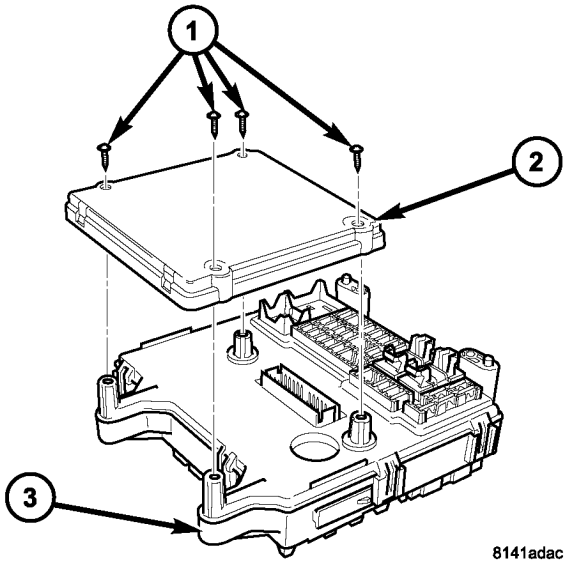

Fig. 10 Body Control Module (BCM) Remove/Install

1 - SCREW (4)
2 - BODY CONTROL MODULE (BCM)
3 - JUNCTION BLOCK (JB)

(4) Remove the BCM from the JB.

BODY CONTROL MODULE (Continued)

INSTALLATION

WARNING: To avoid personal injury or death, on vehicles equipped with airbags, disable the supplemental restraint system before attempting any steering wheel, steering column, airbag, occupant classification system, seat belt tensioner, impact sensor, or instrument panel component diagnosis or service. Disconnect and isolate the battery negative (ground) cable, then wait two minutes for the system capacitor to discharge before performing further diagnosis or service. This is the only sure way to disable the supplemental restraint system. Failure to take the proper precautions could result in accidental airbag deployment.

NOTE: Before replacing a Body Control Module (BCM), use a diagnostic scan tool to retrieve the current settings for the many BCM programmable features including electronic pinion factor (tire size), cabin equalization curve (audio system architecture), country code and Remote Keyless Entry (RKE) system preferences. These settings MUST be programmed into the replacement BCM using the diagnostic scan tool before returning the vehicle to service. A new BCM is shipped in default mode that may prevent proper speedometer indications and the availability of numerous electronic features until it has been properly programmed. Refer to the appropriate diagnostic information.

(1) Position the Body Control Module (BCM) to the Junction Block (JB) and reconnect them at the JB/BCM interface connector (Fig. 10).

(2) Install and tighten the screws that secure the BCM to the JB. Tighten the screws to 2 N·m (20 in. lbs.).

(3) Reinstall the Junction Block Module (JBM) onto the instrument panel end bracket (Refer to 8 - ELECTRICAL/POWER DISTRIBUTION/JUNCTION BLOCK - INSTALLATION).

(4) Reconnect the negative battery cable.

COMMUNICATION

DESCRIPTION

The DaimlerChrysler Programmable Communication Interface (PCI) data bus system is a single wire multiplex system used for vehicle communications on many DaimlerChrysler Corporation vehicles. Multiplexing is a system that enables the transmission of several messages over a single channel or circuit. All DaimlerChrysler vehicles use this principle for communication between various microprocessor-based electronic control modules. The PCI data bus exceeds the Society of Automotive Engineers (SAE) J1850 Standard for Class B Multiplexing.

Many of the electronic control modules in a vehicle require information from the same sensing device. In the past, if information from one sensing device was required by several controllers, a wire from each controller needed to be connected in parallel to that sensor. In addition, each controller utilizing analog sensors required an Analog/Digital (A/D) converter in order to ″read″ these sensor inputs. Multiplexing reduces wire harness complexity, sensor current loads and controller hardware because each sensing device is connected to only one controller, which reads and distributes the sensor information to the other controllers over the data bus. Also, because each controller on the data bus can access the controller sensor inputs to every other controller on the data bus, more function and feature capabilities are possible.

In addition to reducing wire harness complexity, component sensor current loads and controller hardware, multiplexing offers a diagnostic advantage. A multiplex system allows the information flowing between controllers to be monitored using a diagnostic scan tool. The DaimlerChrysler system allows an electronic control module to broadcast message data out onto the bus where all other electronic control modules can ″hear″ the messages that are being sent. When a module hears a message on the data bus that it requires, it relays that message to its microprocessor. Each module ignores the messages on the data bus that are being sent to other electronic control modules.

OPERATION

Data exchange between modules is achieved by serial transmission of encoded data over a single wire broadcast network. The wire colors used for the PCI data bus circuits are yellow with a violet tracer, or violet with a yellow tracer, depending upon the application. The PCI data bus messages are carried over the bus in the form of Variable Pulse Width Modulated (VPWM) signals. The PCI data bus speed is an average 10.4 Kilo-bits per second (Kbps). By comparison, the prior two-wire Chrysler Collision Detection (CCD) data bus system is designed to run at 7.8125 Kbps.

The voltage network used to transmit messages requires biasing and termination. Each module on the PCI data bus system provides its own biasing and termination. Each module (also referred to as a node) terminates the bus through a terminating resistor and a terminating capacitor. There are two types of nodes on the bus. The dominant node terminates the bus through a 1 KW resistor and a 3300 pF capacitor. The Powertrain Control Module (PCM) is

COMMUNICATION (Continued)

the only dominant node for the PCI data bus system. A standard node terminates the bus through an 11 KW resistor and a 330 pF capacitor.

The modules bias the bus when transmitting a message. The PCI bus uses low and high voltage levels to generate signals. Low voltage is around zero volts and the high voltage is about seven and one-half volts. The low and high voltage levels are generated by means of variable-pulse width modulation to form signals of varying length. The Variable Pulse Width Modulation (VPWM) used in PCI bus messaging is a method in which both the state of the bus and the width of the pulse are used to encode bit information. A ″zero″ bit is defined as a short low pulse or a long high pulse. A ″one″ bit is defined as a long low pulse or a short high pulse. A low (passive) state on the bus does not necessarily mean a zero bit. It also depends upon pulse width. If the width is short, it stands for a zero bit. If the width is long, it stands for a one bit. Similarly, a high (active) state does not necessarily mean a one bit. This too depends upon pulse width. If the width is short, it stands for a one bit. If the width is long, it stands for a zero bit.

In the case where there are successive zero or one data bits, both the state of the bus and the width of the pulse are changed alternately. This encoding scheme is used for two reasons. First, this ensures that only one symbol per transition and one transition per symbol exists. On each transition, every transmitting module must decode the symbol on the bus and begin timing of the next symbol. Since timing of the next symbol begins with the last transition detected on the bus, all of the modules are re-synchronized with each symbol. This ensures that there are no accumulated timing errors during PCI data bus communication.

The second reason for this encoding scheme is to guarantee that the zero bit is the dominant bit on the bus. When two modules are transmitting simultaneously on the bus, there must be some form of arbitration to determine which module will gain control. A data collision occurs when two modules are transmitting different messages at the same time. When a module is transmitting on the bus, it is reading the bus at the same time to ensure message integrity. When a collision is detected, the module that transmitted the one bit stops sending messages over the bus until the bus becomes idle.

Each module is capable of transmitting and receiving data simultaneously. The typical PCI bus message has the following four components:

- **Message Header** - One to three bytes in length. The header contains information identifying the message type and length, message priority, target module(s) and sending module.
- **Data Byte(s)** - This is the actual message that is being sent.
- **Cyclic Redundancy Check (CRC) Byte** - This byte is used to detect errors during a message transmission.
- **In-Frame Response (IFR) byte(s)** - If a response is required from the target module(s), it can be sent during this frame. This function is described in greater detail in the following paragraph.

The IFR consists of one or more bytes, which are transmitted during a message. If the sending module requires information to be received immediately, the target module(s) can send data over the bus during the original message. This allows the sending module to receive time-critical information without having to wait for the target module to access the bus. After the IFR is received, the sending module broadcasts an End of Frame (EOF) message and releases control of the bus.

The PCI data bus can be monitored using a diagnostic scan tool. It is possible, however, for the bus to pass all diagnostic scan tool tests and still be faulty if the voltage parameters are all within the specified range and false messages are being sent.

DATA LINK CONNECTOR

DESCRIPTION

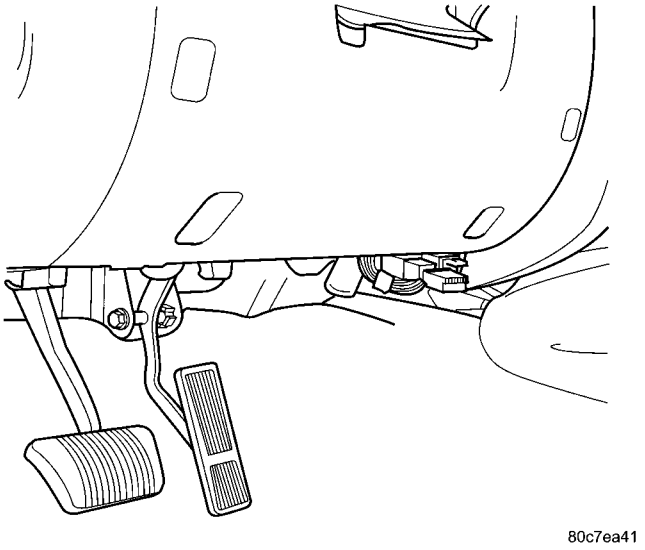

Fig. 11 DATA LINK CONNECTOR LOCATION

The Data Link Connector (DLC) is a 16-way molded plastic connector insulator on a dedicated take out of the instrument panel wire harness. This connector is located at the lower edge of the instrument panel, inboard of the steering column (Fig. 11). The connector insulator is retained by two screws through two integral mounting tabs to the lower instrument panel reinforcement, just below the lower edge of the instrument panel steering column opening cover.

DATA LINK CONNECTOR (Continued)

OPERATION

The Data Link Connector (DLC) is an industry-standard 16-way connector that permits the connection of a diagnostic scan tool to the Programmable Communications Interface (PCI) data bus for interfacing with, configuring, and retrieving Diagnostic Trouble Code (DTC) data from the electronic modules that reside on the data bus network within the vehicle.

FRONT CONTROL MODULE

DESCRIPTION

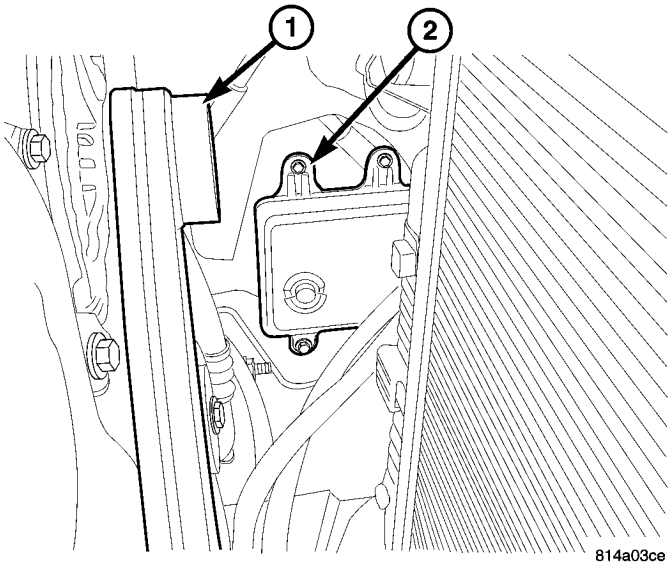

Fig. 12 FRONT CONTROL MODULE

1 - GENERATOR
2 - FCM

The Front Control Module (FCM) (2) (Fig. 12) is located in the engine compartment below the Power Distribution Center (PDC). The FCM's primary function is to define communications between electronic controllers and move data collected from the multiple controllers to the host controller for processing using Controller Area Network (CAN), Programmable Communication Interface (PCI) buss or J1850. The FCM does not contain any drivers, and therefore does not directly operate any vehicle components.

REMOVAL

(1) Disconnect the negative battery cable.
(2) Remove the charge air inlet hose.
(3) Remove the front control module mounting fasteners and disconnect the wiring harness connector (Fig. 13).

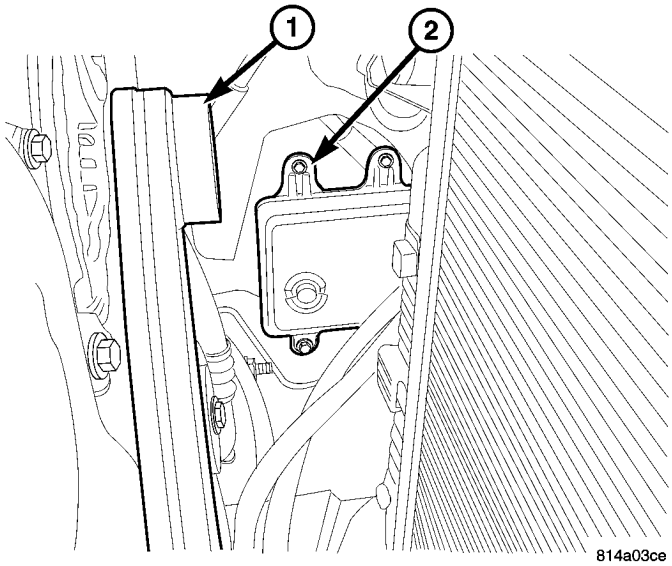

Fig. 13 FRONT CONTROL MODULE

1 - GENERATOR
2 - FCM

INSTALLATION

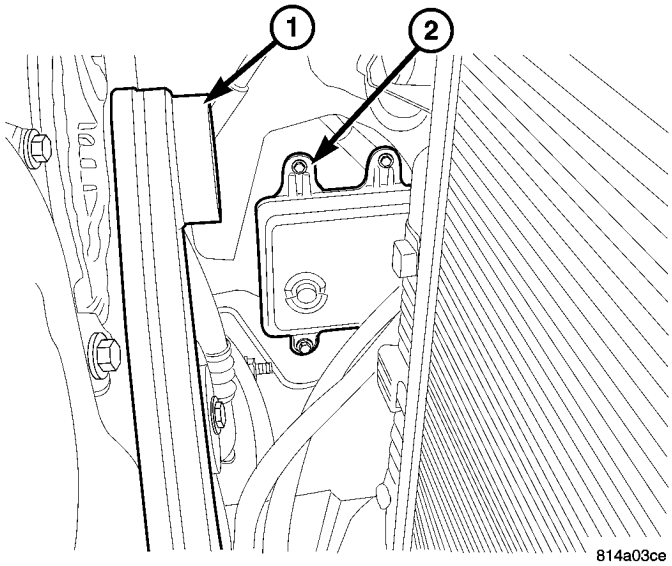

Fig. 14 FRONT CONTROL MODULE

1 - GENERATOR
2 - FCM

(1) Connect the wiring harness to the FCM (2) (Fig. 14) and hand tighten fasteners.
(2) Tighten FCM fasteners to 10.8 N·m (96 in. lbs.).
(3) Install the charge air inlet hose.
(4) Connect the negative battery cable.

ENGINE CONTROL MODULE-DIESEL ENGINE

DESCRIPTION

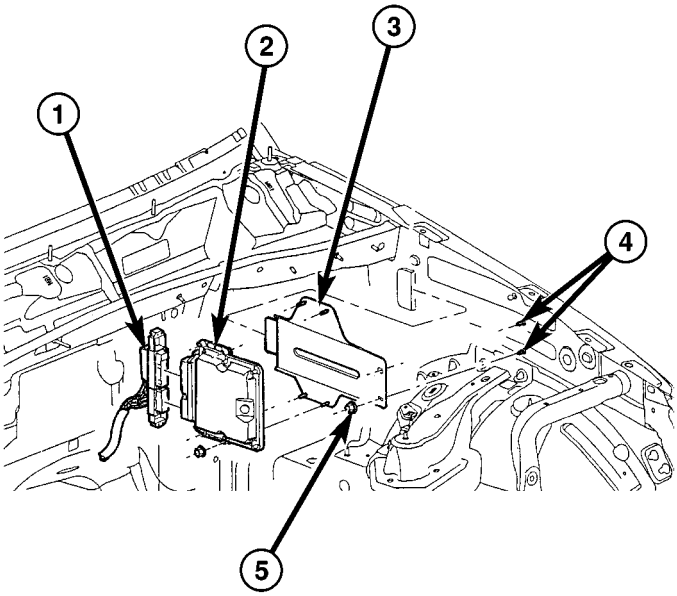

Fig. 15 ENGINE CONTROL MODULE (ECM) REMOVAL/INSTALL

1 - ECM ELECTRICAL CONNECTORS
2 - ENGINE CONTROL MODULE (ECM)
3 - ECM MOUNTING BRACKET
4 - ECM MOUNTING BRACKET MOUNTING STUDS
5 - MOUNTING BRACKET RETAINING NUTS

The ECM is located in the left side of engine compartment attached to the left inner fender behind the battery. The ECM also incorporates the barometric pressure sensor in it's housing (Fig. 15).

OPERATION

The ECM has been programmed to monitor different circuits of the diesel fuel injection system. This monitoring is called on-board diagnostics. Certain criteria must be met for a diagnostic trouble code to be entered into the ECM memory. The criteria may be a range of engine rpm, engine temperature, time or other input signals to the ECM. If all of the criteria for monitoring a system or circuit are met, and a problem is sensed, then a DTC will be stored in the ECM memory. It is possible that a DTC for a monitored circuit may not be entered into the ECM memory, even though a malfunction has occurred. This may happen when the monitoring criteria have not been met. The ECM compares input signal voltages from each input device with specifications (the established high and low limits of the input range) that are programmed into it for that device. If the input voltage is not within the specifications and other trouble code criteria are met, a DTC will be stored in the ECM memory.

ECM OPERATING MODES

As input signals to the ECM change, the ECM adjusts its response to the output devices. For example, the ECM must calculate a different fuel quantity and fuel timing for engine idle condition than it would for a wide open throttle condition. There are several different modes of operation that determine how the ECM responds to the various input signals.

Ignition Switch On (Engine Off)

When the ignition is turned on, the ECM activates the glow plug relay for a time period that is determined by engine coolant temperature, atmospheric temperature and battery voltage.

Engine Start-Up Mode

The ECM uses the engine temperature sensor and the crankshaft position sensor (engine speed) inputs to determine fuel injection quantity.

Normal Driving Modes

Engine idle, warm-up, acceleration, deceleration and wide open throttle modes are controlled based on all of the sensor inputs to the ECM. The ECM uses these sensor inputs to adjust fuel quantity and fuel injector timing.

Limp-In Mode

If there is a fault detected with the accelerator pedal position sensor, the ECM will set the engine speed at 1100 RPM.

Overspeed Detection Mode

If the ECM detects engine RPM that exceeds 5200 RPM, the ECM will set a DTC in memory and illuminate the MIL until the DTC is cleared.

After-Run Mode

The ECM transfers RAM information to ROM and performs an Input/Output state check.

MONITORED CIRCUITS

The ECM is able to monitor and identify most driveability related trouble conditions. Some circuits are directly monitored through ECM feedback circuitry. In addition, the ECM monitors the voltage state of some circuits and compares those states with expected values. Other systems are monitored indirectly when the ECM conducts a rationality test to

identify problems. Although most subsytems of the engine control module are either directly or indirectly monitored, there may be occasions when diagnostic trouble codes are not immediately identified. For a trouble code to set, a specific set of conditions must occur and unless these conditions occur, a DTC will not set.

DIAGNOSTIC TROUBLE CODES

Each diagnostic trouble code (DTC) is diagnosed by following a specific procedure. The diagnostic test procedure contains step-by-step instruction for determining the cause of the DTC as well as no trouble code problems. Refer to the appropriate Diesel Powertrain Diagnostic Manual for more information.

HARD CODE

A DTC that comes back within one cycle of the ignition key is a hard code. This means that the problem is current every time the ECM/SKIM checks that circuit or function. Procedures in this manual verify if the DTC is a hard code at the beginning of each test. When the fault is not a hard code, an intermittent test must be performed. NOTE: If the scan tool displays faults for multiple components (i.e. ECT, VSS, IAT sensors) identify and check the shared circuits for possible problems before continuing (i.e. sensor grounds or 5-volt supply circuits). Refer to the appropriate schematic to identify shared circuits. Refer to the appropriate Diesel Powertrain Diagnostic Manual for more information.

INTERMITTENT CODE

A DTC that is not current every time the ECM/SKIM checks the circuit or function is an intermittent code. Most intermittent DTCs are caused by wiring or connector problems. Problems that come and go like this are the most difficult to diagnose; they must be looked for under specific conditions that cause them. **NOTE: Electromagnetic (radio) interference can cause an intermittent system malfunction.** This interference can interrupt communication between the ignition key transponder and the SKIM. The following checks may assist you in identifying a possible intermittent problem:

- Visually inspect the related wire harness connectors. Look for broken, bent, pushed out, loose fitting or corroded terminals.
- Visually inspect the related wire harness. Look for chafed, pierced or partially broken wire.
- Refer to hotlines or technical service bulletins that may apply.

Refer to the appropriate Diesel Powertrain Diagnostic Manual for more information.

ECM DIAGNOSTIC TROUBLE CODES

IMPORTANT NOTE: Before replacing the ECM for a failed driver, control circuit or ground circuit, be sure to check the related component/circuit integrity for failures not detected due to a double fault in the circuit. Most ECM driver/control circuit failures are caused by internal failures to components (i.e. relays and solenoids) and shorted circuits (i.e. sensor pull-ups, drivers and ground circuits). These faults are difficult to detect when a double fault has occurred and only one DTC has set. If the scan tool displays faults for multiple components (i.e.VSS, ECT, Batt Temp, etc.) identify and check the shared circuits for possible problems before continuing (i.e. sensor grounds or 5-volt supply circuits). Refer to the appropriate wiring diagrams to identify shared circuits. Refer to the appropriate Diesel Powertrain Diagnostic Manual for more information.

STANDARD PROCEDURE - PCM/ECM/SKIM PROGRAMMING - DIESEL

NOTE: Before replacing the PCM/ECM for a failed driver, control circuit or ground circuit, be sure to check the related component/circuit integrity for failures not detected due to a double fault in the circuit. Most PCM/ECM driver/control circuit failures are caused by internal component failures (i.e. relay and solenoids) and shorted circuits (i.e. pull-ups, drivers and switched circuits). These failures are difficult to detect when a double fault has occurred and only one DTC has set.

PCM/SKIM PROGRAMMING

When a PCM (JTEC) and the SKIM are replaced at the same time perform the following steps in order:

(1) Program the new PCM (JTEC)
(2) Program the new SKIM
(3) Replace all ignition keys and program them to the new SKIM.

ECM/SKIM PROGRAMMING

When an ECM (Bosch) and the SKIM are replaced at the same time perform the following steps in order:

(1) Program the new SKIM
(2) Program the new ECM (Bosch)

PROGRAMMING THE ECM (Bosch)

(1) To program the VIN, connect the DRB III® and turn the ignition on.

(2) Select Engine from the main menu. The DRB III® will require the VIN to be entered before continuing.

ENGINE CONTROL MODULE-DIESEL ENGINE (Continued)

(3) Select ENTER to update the VIN. The DRB III® will display the updated VIN.

(4) If the engine is equipped with air conditioning, the ECM A/C function must be enabled. Enable the ECM A/C function as follows:

- Using the DRB III® select ENGINE, MISCELLANEOUS, then ENABLE/DISABLE A/C
- Push 1 to enable A/C. DRB III® screen should display A/C Activated.

PROGRAMMING THE PCM (JTEC)

The SKIS Secret Key is an ID code that is unique to each SKIM. This code is programmed and stored in the SKIM, PCM and transponder chip (ignition keys). When replacing the PCM it is necessary to program the secret key into the new PCM using the DRB III®. Perform the following steps to program the secret key into the PCM.

(1) Turn the ignition switch on (transmission in park/neutral).

(2) Use the DRB III® and select THEFT ALARM, SKIM then MISCELLANEOUS.

(3) Select PCM REPLACED (GAS ENGINE).

(4) Enter secured access mode by entering the vehicle four-digit PIN.

(5) Select ENTER to update PCM VIN.

NOTE: If three attempts are made to enter secure access mode using an incorrect PIN, secured access mode will be locked out for one hour. To exit this lockout mode, turn the ignition to the RUN position for one hour then enter the correct PIN. (Ensure all accessories are turned off. Also monitor the battery state and connect a battery charger if necessary).

(6) Press ENTER to transfer the secret key (the SKIM will send the secret key to the PCM).

(7) Press Page Back to get to the Select System menu and select ENGINE, JTEC (diesel only), MISCELLANEOUS, and SRI MEMORY CHECK.

(8) The DRB III® will ask, Is odometer reading between XX and XX? Select the YES or NO button on the DRB III®. If NO is selected, the DRB III® will read, Enter odometer Reading<From I.P. odometer>. Enter the odometer reading from the Instrument Panel and press ENTER.

PROGRAMMING THE SKIM

(1) Turn the ignition switch on (transmission in park/neutral).

(2) Use the DRB III® and select THEFT ALARM, SKIM then MISCELLANEOUS.

(3) Select PCM REPLACED (GAS ENGINE).

(4) Program the vehicle four-digit PIN into SKIM.

(5) Select COUNTRY CODE and enter the correct country.

NOTE: Be sure to enter the correct country code. If the incorrect country code is programmed into SKIM, the SKIM must be replaced.

(6) Select YES to update VIN (the SKIM will learn the VIN from the PCM).

(7) Press ENTER to transfer the secret key (the PCM will send the secret key to the SKIM).

(8) Program ignition keys to SKIM.

NOTE: If the PCM and the SKIM are replaced at the same time, all vehicle keys will need to be replaced and programmed to the new SKIM.

PROGRAMMING IGNITION KEYS TO THE SKIM

(1) Turn the ignition switch on (transmission in park/neutral).

(2) Use the DRB III® and select THEFT ALARM, SKIM then MISCELLANEOUS.

(3) Select PROGRAM IGNITION KEY'S.

(4) Enter secured access mode by entering the vehicle four-digit PIN.

NOTE: A maximum of eight keys can be learned to each SKIM. Once a key is learned to a SKIM it (the key) cannot be transferred to another vehicle.

If ignition key programming is unsuccessful, the DRB III® will display one of the following messages:

Programming Not Attempted - The DRB III® attempts to read the programmed key status and there are no keys programmed into SKIM memory.

Programming Key Failed (Possible Used Key From Wrong Vehicle) - SKIM is unable to program key due to one of the following:

- faulty ignition key transponder
- ignition key is programmed to another vehicle.

8 Keys Already Learned, Programming Not Done - SKIM transponder ID memory is full.

(5) Obtain ignition keys to be programmed from customer (8 keys maximum).

(6) Using the DRB III®, erase all ignition keys by selecting MISCELLANEOUS and ERASE ALL CURRENT IGN. KEYS.

(7) Program all ignition keys.

Learned Key In Ignition - Ignition key transponder ID is currently programmed in SKIM memory.

ENGINE CONTROL MODULE-DIESEL ENGINE (Continued)

REMOVAL

(1) Disconnect negative battery cable.
(2) Disconnect ECM electrical connectors (Fig. 16).
(3) Remove ECM bracket to inner fender retaining nuts (Fig. 16).
(4) Remove ECM and bracket assembly from vehicle (Fig. 16).

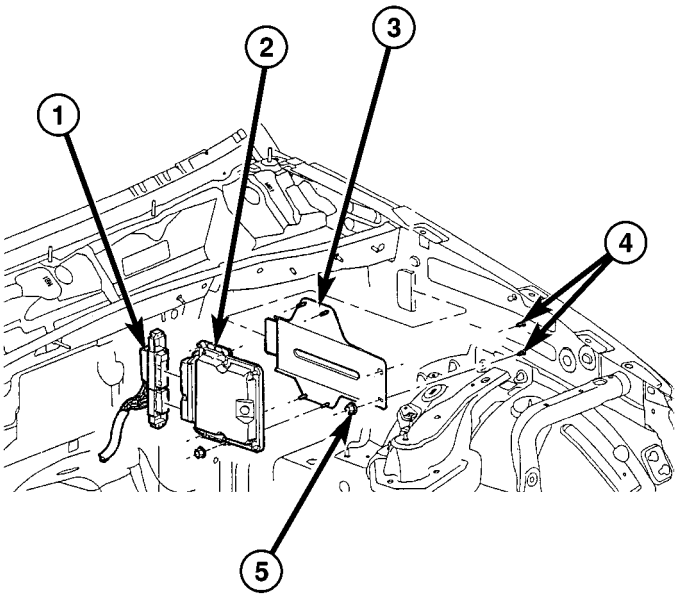

Fig. 16 ENGINE CONTROL MODULE (ECM) REMOVAL/INSTALL

1 - ECM ELECTRICAL CONNECTORS
2 - ENGINE CONTROL MODULE (ECM)
3 - ECM MOUNTING BRACKET
4 - ECM MOUNTING BRACKET MOUNTING STUDS
5 - MOUNTING BRACKET RETAINING NUTS

(5) Separate ECM from bracket.

INSTALLATION

(1) Install ECM on bracket (Fig. 16).
(2) Position ECM and bracket assembly in vehicle (Fig. 16).
(3) Install ECM bracket to inner fender retaining nuts (Fig. 16).
(4) Connect ECM electrical connectors (Fig. 16).
(5) Connect negative battery cable.

POWERTRAIN CONTROL MODULE

DESCRIPTION

DESCRIPTION - PCM

The Powertrain Control Module (PCM) is located in the engine compartment (Fig. 17).

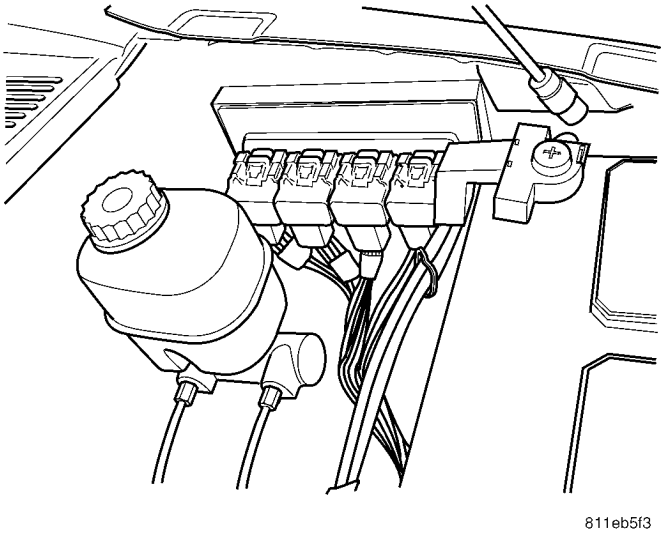

Fig. 17 PCM LOCATION

DESCRIPTION - MODES OF OPERATION

As input signals to the Powertrain Control Module (PCM) change, the PCM adjusts its response to the output devices. For example, the PCM must calculate different injector pulse width and ignition timing for idle than it does for wide open throttle (WOT).

The PCM will operate in two different modes: **Open Loop and Closed Loop**.

During Open Loop modes, the PCM receives input signals and responds only according to preset PCM programming. Input from the oxygen (O2S) sensors is not monitored during Open Loop modes.

During Closed Loop modes, the PCM will monitor the oxygen (O2S) sensors input. This input indicates to the PCM whether or not the calculated injector pulse width results in the ideal air-fuel ratio. This ratio is 14.7 parts air-to-1 part fuel. By monitoring the exhaust oxygen content through the O2S sensor, the PCM can fine tune the injector pulse width. This is done to achieve optimum fuel economy combined with low emission engine performance.

The fuel injection system has the following modes of operation:

- Ignition switch ON
- Engine start-up (crank)
- Engine warm-up

POWERTRAIN CONTROL MODULE (Continued)

- Idle
- Cruise
- Acceleration
- Deceleration
- Wide open throttle (WOT)
- Ignition switch OFF

The ignition switch On, engine start-up (crank), engine warm-up, acceleration, deceleration and wide open throttle modes are Open Loop modes. The idle and cruise modes, (with the engine at operating temperature) are Closed Loop modes.

IGNITION SWITCH (KEY-ON) MODE

This is an Open Loop mode. When the fuel system is activated by the ignition switch, the following actions occur:

- The PCM pre-positions the idle air control (IAC) motor.
- The PCM determines atmospheric air pressure from the MAP sensor input to determine basic fuel strategy.
- The PCM monitors the engine coolant temperature sensor input. The PCM modifies fuel strategy based on this input.
- Intake manifold air temperature sensor input is monitored.
- Throttle position sensor (TPS) is monitored.
- The auto shutdown (ASD) relay is energized by the PCM for approximately three seconds.
- The fuel pump is energized through the fuel pump relay by the PCM. The fuel pump will operate for approximately three seconds unless the engine is operating or the starter motor is engaged.
- The O2S sensor heater element is energized via the ASD or O2S heater relay. The O2S sensor input is not used by the PCM to calibrate air-fuel ratio during this mode of operation.

ENGINE START-UP MODE

This is an Open Loop mode. The following actions occur when the starter motor is engaged.

The PCM receives inputs from:

- Battery voltage
- Engine coolant temperature sensor
- Crankshaft position sensor
- Intake manifold air temperature sensor
- Manifold absolute pressure (MAP) sensor
- Throttle position sensor (TPS)
- Camshaft position sensor signal

The PCM monitors the crankshaft position sensor. If the PCM does not receive a crankshaft position sensor signal within 3 seconds of cranking the engine, it will shut down the fuel injection system.

The fuel pump is activated by the PCM through the fuel pump relay.

Voltage is applied to the fuel injectors with the ASD relay via the PCM. The PCM will then control the injection sequence and injector pulse width by turning the ground circuit to each individual injector on and off.

The PCM determines the proper ignition timing according to input received from the crankshaft position sensor.

ENGINE WARM-UP MODE

This is an Open Loop mode. During engine warm-up, the PCM receives inputs from:

- Battery voltage
- Crankshaft position sensor
- Engine coolant temperature sensor
- Intake manifold air temperature sensor
- Manifold absolute pressure (MAP) sensor
- Throttle position sensor (TPS)
- Camshaft position sensor signal
- Park/neutral switch (gear indicator signal—auto. trans. only)
- Air conditioning select signal (if equipped)
- Air conditioning request signal (if equipped)

Based on these inputs the following occurs:

- Voltage is applied to the fuel injectors with the ASD relay via the PCM. The PCM will then control the injection sequence and injector pulse width by turning the ground circuit to each individual injector on and off.
- The PCM adjusts engine idle speed through the idle air control (IAC) motor and adjusts ignition timing.
- The PCM operates the A/C compressor clutch through the A/C compressor clutch relay. This is done if A/C has been selected by the vehicle operator and specified pressures are met at the high and low–pressure A/C switches. Refer to Heating and Air Conditioning for additional information.
- When engine has reached operating temperature, the PCM will begin monitoring O2S sensor input. The system will then leave the warm-up mode and go into closed loop operation.

IDLE MODE

When the engine is at operating temperature, this is a Closed Loop mode. At idle speed, the PCM receives inputs from:

- Air conditioning select signal (if equipped)
- Air conditioning request signal (if equipped)
- Battery voltage
- Crankshaft position sensor
- Engine coolant temperature sensor
- Intake manifold air temperature sensor
- Manifold absolute pressure (MAP) sensor
- Throttle position sensor (TPS)
- Camshaft position sensor signal

POWERTRAIN CONTROL MODULE (Continued)

- Battery voltage
- Park/neutral switch (gear indicator signal—auto. trans. only)
- Oxygen sensors

Based on these inputs, the following occurs:

- Voltage is applied to the fuel injectors with the ASD relay via the PCM. The PCM will then control injection sequence and injector pulse width by turning the ground circuit to each individual injector on and off.
- The PCM monitors the O2S sensor input and adjusts air-fuel ratio by varying injector pulse width. It also adjusts engine idle speed through the idle air control (IAC) motor.
- The PCM adjusts ignition timing by increasing and decreasing spark advance.
- The PCM operates the A/C compressor clutch through the A/C compressor clutch relay. This is done if A/C has been selected by the vehicle operator and specified pressures are met at the high and low–pressure A/C switches. Refer to Heating and Air Conditioning for additional information.

CRUISE MODE

When the engine is at operating temperature, this is a Closed Loop mode. At cruising speed, the PCM receives inputs from:

- Air conditioning select signal (if equipped)
- Air conditioning request signal (if equipped)
- Battery voltage
- Engine coolant temperature sensor
- Crankshaft position sensor
- Intake manifold air temperature sensor
- Manifold absolute pressure (MAP) sensor
- Throttle position sensor (TPS)
- Camshaft position sensor signal
- Park/neutral switch (gear indicator signal—auto. trans. only)
- Oxygen (O2S) sensors

Based on these inputs, the following occurs:

- Voltage is applied to the fuel injectors with the ASD relay via the PCM. The PCM will then adjust the injector pulse width by turning the ground circuit to each individual injector on and off.
- The PCM monitors the O2S sensor input and adjusts air-fuel ratio. It also adjusts engine idle speed through the idle air control (IAC) motor.
- The PCM adjusts ignition timing by turning the ground path to the coil(s) on and off.
- The PCM operates the A/C compressor clutch through the clutch relay. This happens if A/C has been selected by the vehicle operator and requested by the A/C thermostat.

ACCELERATION MODE

This is an Open Loop mode. The PCM recognizes an abrupt increase in throttle position or MAP pressure as a demand for increased engine output and vehicle acceleration. The PCM increases injector pulse width in response to increased throttle opening.

DECELERATION MODE

When the engine is at operating temperature, this is an Open Loop mode. During hard deceleration, the PCM receives the following inputs.

- Air conditioning select signal (if equipped)
- Air conditioning request signal (if equipped)
- Battery voltage
- Engine coolant temperature sensor
- Crankshaft position sensor
- Intake manifold air temperature sensor
- Manifold absolute pressure (MAP) sensor
- Throttle position sensor (TPS)
- Camshaft position sensor signal
- Park/neutral switch (gear indicator signal—auto. trans. only)
- Vehicle speed

If the vehicle is under hard deceleration with the proper rpm and closed throttle conditions, the PCM will ignore the oxygen sensor input signal. The PCM will enter a fuel cut-off strategy in which it will not supply a ground to the injectors. If a hard deceleration does not exist, the PCM will determine the proper injector pulse width and continue injection.

Based on the above inputs, the PCM will adjust engine idle speed through the idle air control (IAC) motor.

The PCM adjusts ignition timing by turning the ground path to the coil on and off.

WIDE OPEN THROTTLE MODE

This is an Open Loop mode. During wide open throttle operation, the PCM receives the following inputs.

- Battery voltage
- Crankshaft position sensor
- Engine coolant temperature sensor
- Intake manifold air temperature sensor
- Manifold absolute pressure (MAP) sensor
- Throttle position sensor (TPS)
- Camshaft position sensor signal

During wide open throttle conditions, the following occurs:

- Voltage is applied to the fuel injectors with the ASD relay via the PCM. The PCM will then control the injection sequence and injector pulse width by turning the ground circuit to each individual injector on and off. The PCM ignores the oxygen sensor input signal and provides a predetermined amount of addi-

POWERTRAIN CONTROL MODULE (Continued)

tional fuel. This is done by adjusting injector pulse width.

- The PCM adjusts ignition timing by turning the ground path to the coil(s) on and off.

IGNITION SWITCH OFF MODE

When ignition switch is turned to OFF position, the PCM stops operating the injectors, ignition coil, ASD relay and fuel pump relay.

DESCRIPTION - 5 VOLT SUPPLIES

Two different Powertrain Control Module (PCM) five volt supply circuits are used; primary and secondary.

DESCRIPTION - IGNITION CIRCUIT SENSE

This circuit ties the ignition switch to the Powertrain Control Module (PCM).

DESCRIPTION - POWER GROUNDS

The Powertrain Control Module (PCM) has 2 main grounds. Both of these grounds are referred to as power grounds. All of the high-current, noisy, electrical devices are connected to these grounds as well as all of the sensor returns. The sensor return comes into the sensor return circuit, passes through noise suppression, and is then connected to the power ground.

The power ground is used to control ground circuits for the following PCM loads:

- Generator field winding
- Fuel injectors
- Ignition coil(s)
- Certain relays/solenoids
- Certain sensors

DESCRIPTION - SENSOR RETURN

The Sensor Return circuits are internal to the Powertrain Control Module (PCM).

Sensor Return provides a low–noise ground reference for all engine control system sensors. Refer to Power Grounds for more information.

OPERATION

OPERATION - PCM

The PCM operates the fuel system. The PCM is a pre-programmed, triple microprocessor digital computer. It regulates ignition timing, air-fuel ratio, emission control devices, charging system, certain transmission features, speed control, air conditioning compressor clutch engagement and idle speed. The PCM can adapt its programming to meet changing operating conditions.

The PCM receives input signals from various switches and sensors. Based on these inputs, the PCM regulates various engine and vehicle operations through different system components. These components are referred to as Powertrain Control Module (PCM) Outputs. The sensors and switches that provide inputs to the PCM are considered Powertrain Control Module (PCM) Inputs.

The PCM adjusts ignition timing based upon inputs it receives from sensors that react to: engine rpm, manifold absolute pressure, engine coolant temperature, throttle position, transmission gear selection (automatic transmission), vehicle speed, power steering pump pressure, and the brake switch.

The PCM adjusts idle speed based on inputs it receives from sensors that react to: throttle position, vehicle speed, transmission gear selection, engine coolant temperature and from inputs it receives from the air conditioning clutch switch and brake switch.

Based on inputs that it receives, the PCM adjusts ignition coil dwell. The PCM also adjusts the generator charge rate through control of the generator field and provides speed control operation.

NOTE: PCM Inputs:

- A/C request (if equipped with factory A/C)
- A/C select (if equipped with factory A/C)
- A/C pressure transducer
- Auto shutdown (ASD) sense
- Battery temperature
- Battery voltage
- Brake switch
- J1850 bus (+) circuits
- J1850 bus (-) circuits
- Camshaft position sensor signal
- Crankshaft position sensor
- Data link connection for DRB scan tool
- Engine coolant temperature sensor
- Fuel level (through J1850 circuitry)
- Generator (battery voltage) output
- Ignition circuit sense (ignition switch in on/off/crank/run position)
- Intake manifold air temperature sensor
- Knock sensors (2 on 3.7L engine)
- Leak detection pump (switch) sense (if equipped)
- Manifold absolute pressure (MAP) sensor
- Oil pressure
- Oxygen sensors
- Park/neutral switch (auto. trans. only)
- Power ground
- Power steering pressure switch
- Sensor return
- Signal ground
- Speed control multiplexed single wire input
- Throttle position sensor
- Transfer case switch (4WD range position)
- Vehicle speed sensor

POWERTRAIN CONTROL MODULE (Continued)

NOTE: PCM Outputs:

- A/C clutch relay
- Auto shutdown (ASD) relay
- J1850 bus (+/-) circuits for: speedometer, voltmeter, fuel gauge, oil pressure gauge/lamp, engine temp. gauge and speed control warn. lamp
- Clutch pedal position switch override relay
- Data link connection for DRB scan tool
- EGR valve control solenoid (if equipped)
- EVAP canister purge solenoid
- Five volt sensor supply (primary)
- Five volt sensor supply (secondary)
- Fuel injectors
- Fuel pump relay
- Generator field driver (-)
- Generator field driver (+)
- Idle air control (IAC) motor
- Ignition coil(s)
- Leak detection pump (if equipped)
- Malfunction indicator lamp (Check engine lamp). Driven through J1850 circuits.
- Oxygen sensor heater relays
- Oxygen sensors (pulse width modulated)
- Radiator cooling fan relay (pulse width modulated)
- Speed control vacuum solenoid
- Speed control vent solenoid
- Tachometer (if equipped). Driven through J1850 circuits.
- Transmission convertor clutch circuit. Driven through J1850 circuits.

OPERATION - 5 VOLT SUPPLIES

Primary 5–volt supply:

- supplies the required 5 volt power source to the Crankshaft Position (CKP) sensor.
- supplies the required 5 volt power source to the Camshaft Position (CMP) sensor.
- supplies a reference voltage for the Manifold Absolute Pressure (MAP) sensor.
- supplies a reference voltage for the Throttle Position Sensor (TPS) sensor.

Secondary 5–volt supply:

- supplies the required 5 volt power source to the oil pressure sensor.
- supplies the required 5 volt power source for the Vehicle Speed Sensor (VSS) (if equipped).
- supplies the 5 volt power source to the transmission pressure sensor (certain automatic transmissions).

OPERATION - IGNITION CIRCUIT SENSE

The ignition circuit sense input tells the PCM the ignition switch has energized the ignition circuit.

Battery voltage is also supplied to the PCM through the ignition switch when the ignition is in the RUN or START position. This is referred to as the ″ignition sense″ circuit and is used to ″wake up″ the PCM. Voltage on the ignition input can be as low as 6 volts and the PCM will still function. Voltage is supplied to this circuit to power the PCM's 8-volt regulator and to allow the PCM to perform fuel, ignition and emissions control functions.

REMOVAL

USE THE DRB SCAN TOOL TO REPROGRAM THE NEW POWERTRAIN CONTROL MODULE (PCM) WITH THE VEHICLES ORIGINAL IDENTIFICATION NUMBER (VIN) AND THE VEHICLES ORIGINAL MILEAGE. IF THIS STEP IS NOT DONE, A DIAGNOSTIC TROUBLE CODE (DTC) MAY BE SET.

The PCM is located in the engine compartment near the battery (Fig. 18).

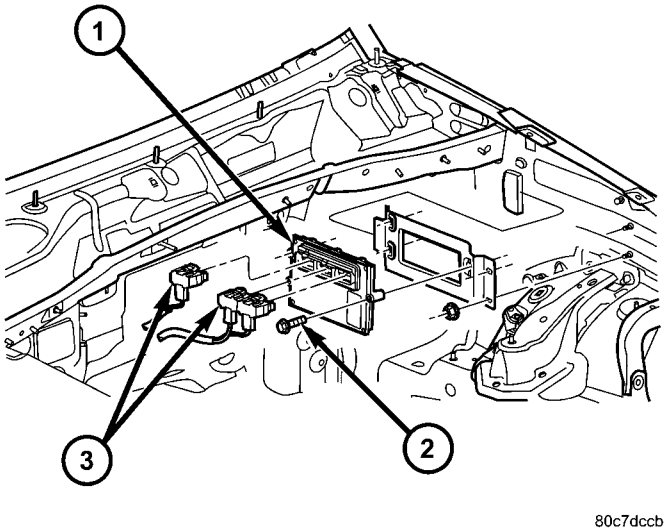

Fig. 18 PCM REMOVE/INSTALL

1 - PCM
2 - MOUNTING BOLTS (3)
3 - 32-WAY CONNECTORS

To avoid possible voltage spike damage to the PCM, ignition key must be off, and negative battery cable must be disconnected before unplugging PCM connectors.

(1) Disconnect negative battery cable at battery.

(2) Remove cover over electrical connectors. Cover snaps onto PCM.

(3) **NGC Modules :** Carefully unplug the four 38-way connectors from PCM. **JTEC Modules :** Carefully unplug the three 32–way connectors from PCM.

(4) Remove three PCM mounting bolts and remove PCM from vehicle.

POWERTRAIN CONTROL MODULE (Continued)

INSTALLATION

USE THE DRB SCAN TOOL TO REPROGRAM THE NEW POWERTRAIN CONTROL MODULE (PCM) WITH THE VEHICLES ORIGINAL IDENTIFICATION NUMBER (VIN) AND THE VEHICLES ORIGINAL MILEAGE. IF THIS STEP IS NOT DONE, A DIAGNOSTIC TROUBLE CODE (DTC) MAY BE SET.

(1) Install PCM and 3 mounting bolts to vehicle.

(2) Tighten bolts. Refer to torque specifications.

(3) Check pin connectors in the PCM and its connectors for corrosion or damage. Also, the pin heights in connectors should all be same. Repair as necessary before installing connectors.

(4) **NGC Modules :** Carefully install the four 38-way connectors into PCM. **JTEC Modules :** Carefully install the three 32–way connectors into PCM.

(5) Install cover over electrical connectors. Cover snaps onto PCM.

(6) Install battery cable.

(7) Use the DRB scan tool to reprogram new PCM with vehicles original Identification Number (VIN) and original vehicle mileage.

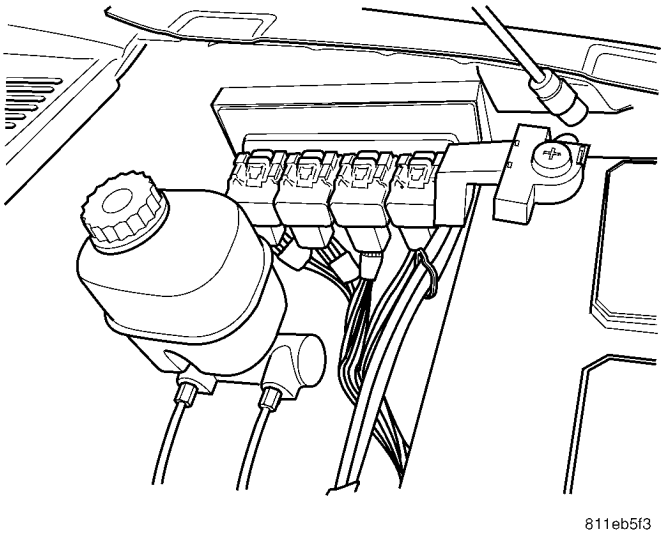

Fig. 19 PCM

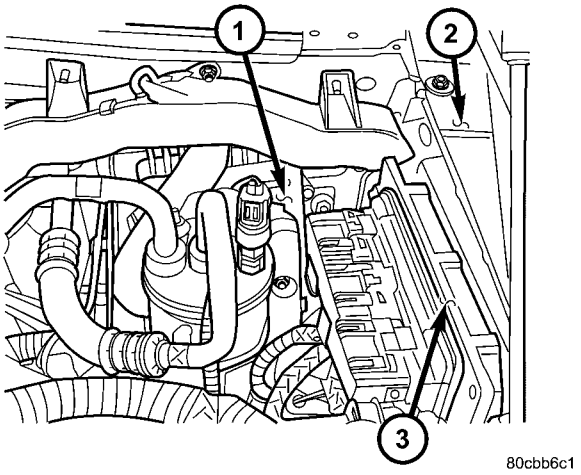

Fig. 20 Transmission Control Module Location

TRANSMISSION CONTROL MODULE

DESCRIPTION

TRANSMISSION CONTROL MODULE - GASOLINE ENGINES

The Transmission Control Module (TCM) is a submodule within the Powertrain Control Module (PCM). The PCM is located on the left inner fender (Fig. 19).

TRANSMISSION CONTROL MODULE - DIESEL ENGINE

The Transmission Control Module (TCM) is located in the engine compartment on the left (driver) side and is mounted to the dash panel (Fig. 20).

OPERATION

TRANSMISSION CONTROL MODULE - GASOLINE ENGINES

The TCM is the controlling unit for all electronic operations of the transmission. The TCM receives information regarding vehicle operation from both direct and indirect inputs, and selects the operational mode of the transmission. Direct inputs are hardwired to, and used specifically by the TCM. Indirect inputs originate from other components/modules, and are shared with the TCM via the PCI bus.

Some examples of **direct inputs** to the TCM are:

- Battery (B+) voltage
- Ignition “ON” voltage
- Transmission Control Relay (Switched B+)
- Throttle Position Sensor
- Crankshaft Position Sensor (CKP)
- Transmission Range Sensor (TRS)
- Pressure Switches (L/R, 2/4, OD)
- Transmission Temperature Sensor (Integral to TRS)
- Input Shaft Speed Sensor
- Output Shaft Speed Sensor

TRANSMISSION CONTROL MODULE (Continued)

Some examples of **indirect inputs** to the TCM are:

- Engine/Body Identification
- Manifold Pressure
- Target Idle
- Torque Reduction Confirmation
- Speed Control ON/OFF Switch
- Engine Coolant Temperature
- Ambient/Battery Temperature
- Brake Switch Status
- DRB® III Communication

Based on the information received from these various inputs, the TCM determines the appropriate shift schedule and shift points, depending on the present operating conditions and driver demand. This is possible through the control of various direct and indirect outputs.

Some examples of TCM **direct outputs** are:

- Transmission Control Relay
- Solenoids (L/R, 2/4, OD and UD)
- Vehicle Speed (to PCM)
- Torque Reduction Request (to PCM)

Some examples of TCM **indirect outputs** are:

- Transmission Temperature (to PCM)
- PRNDL Position (to BCM)

In addition to monitoring inputs and controlling outputs, the TCM has other important responsibilities and functions:

- Storing and maintaining Clutch Volume Indices (CVI)
- Storing and selecting appropriate Shift Schedules
- System self-diagnostics
- Diagnostic capabilities (with DRB® III scan tool)

NOTE: If the TCM has been replaced, the "Quick Learn Procedure" must be performed. (Refer to 8 - ELECTRICAL/ELECTRONIC CONTROL MODULES/ TRANSMISSION CONTROL MODULE - STANDARD PROCEDURE)

CLUTCH VOLUME INDEX (CVI)

An important function of the TCM is to monitor Clutch Volume Index (CVI). CVIs represent the volume of fluid needed to compress a clutch pack.

The TCM monitors gear ratio changes by monitoring the Input and Output Speed Sensors. The Input, or Turbine Speed Sensor sends an electrical signal to the TCM that represents input shaft rpm. The Output Speed Sensor provides the TCM with output shaft speed information.

By comparing the two inputs, the TCM can determine transmission gear position. This is important to the CVI calculation because the TCM determines CVIs by monitoring how long it takes for a gear change to occur (Fig. 21).

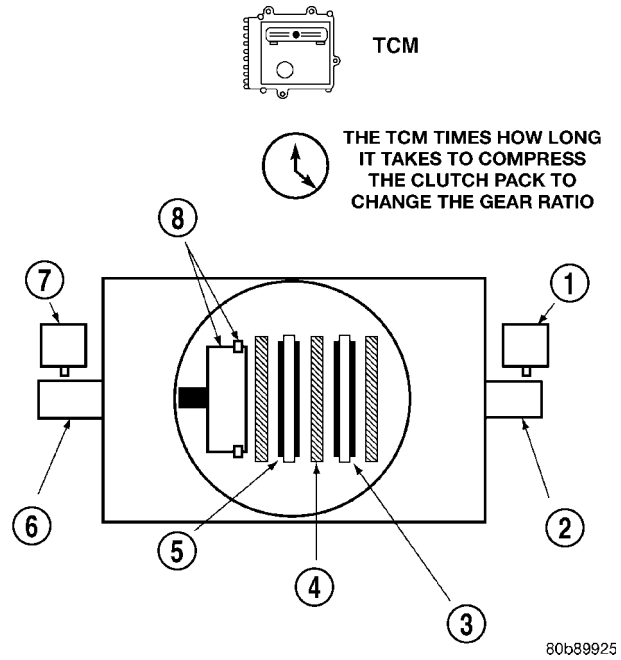

Fig. 21 Example of CVI Calculation

1 - OUTPUT SPEED SENSOR
2 - OUTPUT SHAFT
3 - CLUTCH PACK
4 - SEPARATOR PLATE
5 - FRICTION DISCS
6 - INPUT SHAFT
7 - INPUT SPEED SENSOR
8 - PISTON AND SEAL

Gear ratios can be determined by using the DRB® III Scan Tool and reading the Input/Output Speed Sensor values in the "Monitors" display. Gear ratio can be obtained by dividing the Input Speed Sensor value by the Output Speed Sensor value.

For example, if the input shaft is rotating at 1000 rpm and the output shaft is rotating at 500 rpm, then the TCM can determine that the gear ratio is 2:1. In direct drive (3rd gear), the gear ratio changes to 1:1. The gear ratio changes as clutches are applied and released. By monitoring the length of time it takes for the gear ratio to change following a shift request, the TCM can determine the volume of fluid used to apply or release a friction element.

The volume of transmission fluid needed to apply the friction elements are continuously updated for adaptive controls. As friction material wears, the volume of fluid need to apply the element increases.

TRANSMISSION CONTROL MODULE (Continued)

Certain mechanical problems within the input clutch assembly (broken return springs, out of position snap rings, excessive clutch pack clearance, improper assembly, etc.) can cause inadequate or out-of-range element volumes. Also, defective Input/Output Speed Sensors and wiring can cause these conditions. The following chart identifies the appropriate clutch volumes and when they are monitored/updated:

CLUTCH VOLUMES				
Clutch	When Updated			Proper Clutch Volume
	Shift Sequence	Oil Temperature	Throttle Angle	
L/R	2-1 or 3-1 coast downshift	> 70°	< 5°	35 to 83
2/4	1-2 shift	> 110°	5 - 54°	20 to 77
OD	2-3 shift			48 to 150
UD	4-3 or 4-2 shift		> 5°	24 to 70

SHIFT SCHEDULES

As mentioned earlier, the TCM has programming that allows it to select a variety of shift schedules. Shift schedule selection is dependent on the following:

- Shift lever position
- Throttle position
- Engine load
- Fluid temperature
- Software level

As driving conditions change, the TCM appropriately adjusts the shift schedule. Refer to the following table 42RLE Shift Schedule to determine the appropriate operation expected, depending on driving conditions.

42RLE SHIFT SCHEDULE

Schedule	Condition	Expected Operation
Extreme Cold	Oil temperature at start-up below -16° F	Park, Reverse, Neutral and 2nd gear only (prevents shifting which may fail a clutch with frequent shifts)
Cold	Oil temperature at start-up above -12° F and below 36° F	– Delayed 2-3 upshift (approximately 22-31 mph) – Delayed 3-4 upshift (45-53 mph) – Early 4-3 costdown shift (approximately 30 mph) – Early 3-2 coastdown shift (approximately 17 mph) – High speed 4-2, 3-2, 2-1 kick-down shifts are prevented – No EMCC
Warm	Oil temperature at start-up above 36° F and below 80 degree F	– Normal operation (upshift, kick-downs, and coastdowns) – No EMCC

TRANSMISSION CONTROL MODULE (Continued)

Schedule	Condition	Expected Operation
Hot	Oil temperature at start-up above 80° F	– Normal operation (upshift, kick-downs, and coastdowns) – Full EMCC, no PEMCC except to engage FEMCC (except at closed throttle at speeds above 70-83 mph)
Overheat	Oil temperature above 240° F or engine coolant temperature above 244° F	– Delayed 2-3 upshift (25-32 mph) – Delayed 3-4 upshift (41-48 mph) – 3rd gear FEMCC from 30-48 mph – 3rd gear PEMCC from 27-31 mph
Super Overheat	Oil temperature above 260° F	– All ″Overheat″ shift schedule features apply – 2nd gear PEMCC above 22 mph – Above 22 mph the torque converter will not unlock unless the throttle is closed or if a wide open throttle 2nd PEMCC to 1 kickdown is made

TRANSMISSION CONTROL MODULE - DIESEL ENGINE

The Transmission Control Module (TCM) controls all electronic operations of the transmission. The TCM receives information regarding vehicle operation from both direct and indirect inputs, and selects the operational mode of the transmission. Direct inputs are hard wired to, and used specifically by the TCM. Indirect inputs are shared with the TCM via the vehicle communication bus.

Some examples of **direct inputs** to the TCM are:

- Battery (B+) voltage
- Ignition “ON” voltage
- Transmission Control Relay (Switched B+)
- Throttle Position Sensor
- Crankshaft Position Sensor
- Transmission Range Sensor
- Pressure Switches
- Transmission Temperature Sensor
- Input Shaft Speed Sensor
- Output Shaft Speed Sensor
- Line Pressure Sensor

Some examples of **indirect inputs** to the TCM are:

- Engine/Body Identification
- Manifold Pressure
- Target Idle
- Torque Reduction Confirmation
- Engine Coolant Temperature
- Ambient/Battery Temperature
- Scan Tool Communication

Based on the information received from these various inputs, the TCM determines the appropriate shift schedule and shift points, depending on the present operating conditions and driver demand. This is possible through the control of various direct and indirect outputs.

Some examples of TCM **direct outputs** are:

- Transmission Control Relay
- Solenoids
- Torque Reduction Request

Some examples of TCM **indirect outputs** are:

- Transmission Temperature (to PCM)
- PRNDL Position (to cluster/CCN)

In addition to monitoring inputs and controlling outputs, the TCM has other important responsibilities and functions:

- Storing and maintaining Clutch Volume Indexes (CVI)
- Storing and selecting appropriate Shift Schedules
- System self-diagnostics
- Diagnostic capabilities (with scan tool)

NOTE: If the TCM has been replaced, the “Quick Learn Procedure” must be performed. (Refer to 8 - ELECTRICAL/ELECTRONIC CONTROL MODULES/ TRANSMISSION CONTROL MODULE - STANDARD PROCEDURE)

TRANSMISSION CONTROL MODULE (Continued)

BATTERY FEED

A fused, direct battery feed to the TCM is used for continuous power. This battery voltage is necessary to retain memory in the TCM. When the battery (B+) is disconnected, this memory is lost. When the battery (B+) is restored, this memory loss is detected by the TCM and a Diagnostic Trouble Code (DTC) is set.

CLUTCH VOLUME INDEXES (CVI)

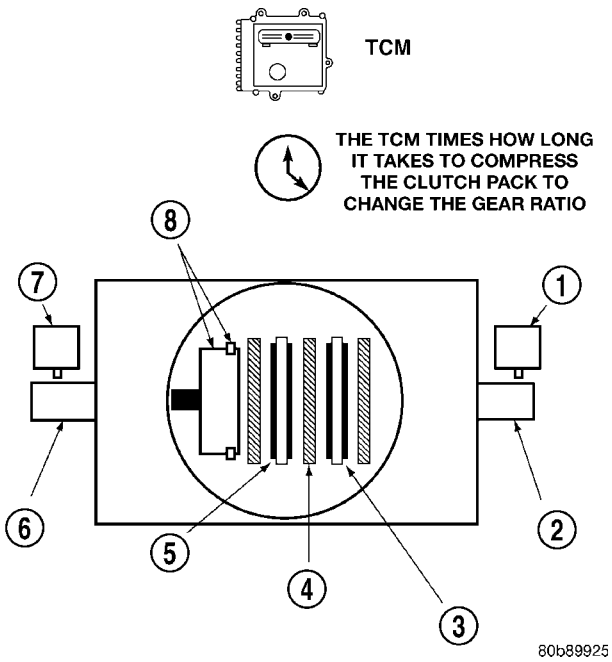

Fig. 22 Example of CVI Calculation

1 - OUTPUT SPEED SENSOR
2 - OUTPUT SHAFT
3 - CLUTCH PACK
4 - SEPARATOR PLATE
5 - FRICTION DISCS
6 - INPUT SHAFT
7 - INPUT SPEED SENSOR
8 - PISTON AND SEAL

An important function of the TCM is to monitor Clutch Volume Indexes (CVI). CVIs represent the volume of fluid needed to compress a clutch pack.

The TCM monitors gear ratio changes by monitoring the Input and Output Speed Sensors. The Input, or Turbine Speed Sensor sends an electrical signal to the TCM that represents input shaft rpm. The Output Speed Sensor provides the TCM with output shaft speed information.

By comparing the two inputs, the TCM can determine transmission gear position. This is important to the CVI calculation because the TCM determines CVIs by monitoring how long it takes for a gear change to occur (Fig. 22).

Gear ratios can be determined by using the Scan Tool and reading the Input/Output Speed Sensor values in the “Monitors” display. Gear ratio can be obtained by dividing the Input Speed Sensor value by the Output Speed Sensor value.

For example, if the input shaft is rotating at 1000 rpm and the output shaft is rotating at 500 rpm, then the TCM can determine that the gear ratio is 2:1. In direct drive (3rd gear), the gear ratio changes to 1:1. The gear ratio changes as clutches are applied and released. By monitoring the length of time it takes for the gear ratio to change following a shift request, the TCM can determine the volume of fluid used to apply or release a friction element.

The volume of transmission fluid needed to apply the friction elements are continuously updated for adaptive controls. As friction material wears, the volume of fluid need to apply the element increases.

Certain mechanical problems within the input clutch assembly can cause inadequate or out-of-range element volumes. Also, defective Input/Output Speed Sensors and wiring can cause these conditions. The following chart identifies the appropriate clutch volumes and when they are monitored/updated:

CLUTCH VOLUMES		
Clutch	**When Updated**	**Proper Clutch Volume**
L/R	2-1 or 3-1 downshift	45 to 134
2C	3-2 kickdown shift	25 to 85
OD	2-3 upshift	30 to 100
4C	3-4 upshift	30 to 85
UD	4-3 kickdown shift	30 to 100

SHIFT SCHEDULES

As mentioned earlier, the TCM has programming that allows it to select a variety of shift schedules. Shift schedule selection is dependent on the following:

- Shift lever position
- Throttle position
- Engine load
- Fluid temperature
- Software level

As driving conditions change, the TCM appropriately adjusts the shift schedule. Refer to the following chart to determine the appropriate operation expected, depending on driving conditions.

TRANSMISSION CONTROL MODULE (Continued)

Schedule	Condition	Expected Operation
Extreme Cold	Oil temperature below -16° F	-Park, Reverse, Neutral and 1st and 3rd gear only in D position, 2nd gear only in Manual 2 or L -No EMCC
Super Cold	Oil temperature between -12° F and 10° F	- Delayed 2-3 upshift - Delayed 3-4 upshift - Early 4-3 coastdown shift - High speed 4-2, 3-2, 2-1 kick-down shifts are prevented -Shifts at high throttle openings willl be early. - No EMCC
Cold	Oil temperature between 10° F and 36° F	-Shift schedule is the same as Super Cold except that the 2-3 upshifts are not delayed.
Warm	Oil temperature between 40° F and 80° F	- Normal operation (upshift, kick-downs, and coastdowns) - No EMCC
Hot	Oil temperature between 80° F and 240° F	- Normal operation (upshift, kick-downs, and coastdowns) - Normal EMCC operation
Overheat	Oil temperature above 240° F or engine coolant temperature above 244° F	- Delayed 2-3 upshift - Delayed 3-4 upshift - 3rd gear FEMCC from 30-48 mph - 3rd gear PEMCC above 35 mph - Above 25 mph the torque converter will not unlock unless the throttle is closed or if a wide open throttle 2nd PEMCC to 1 kickdown is made

STANDARD PROCEDURE

TCM QUICK LEARN

The quick learn procedure requires the use of the scan tool.

This program allows the electronic transmission system to recalibrate itself. This will provide the proper transmission operation. The quick learn procedure should be performed if any of the following procedures are performed:

- Transmission Assembly Replacement
- Transmission Control Module Replacement
- Solenoid Pack Replacement
- Clutch Plate and/or Seal Replacement
- Valve Body Replacement or Recondition

To perform the Quick Learn Procedure, the following conditions must be met:

- The brakes must be applied
- The engine speed must be above 500 rpm
- The throttle angle (TPS) must be less than 3 degrees
- The shift lever position must stay in PARK until prompted to shift to overdrive
- The shift lever position must stay in overdrive after the Shift to Overdrive prompt until the scan tool indicates the procedure is complete.
- The calculated oil temperature must be above 60° and below 200°

DRIVE LEARN

When a transmission is repaired and a Quick Learn procedure has been performed on the Transmission Control Module (TCM), the following Drive

TRANSMISSION CONTROL MODULE (Continued)

Learn procedure can be performed to fine tune any shifts which are particularly objectionable.

NOTE: It is not necessary to perform the complete Drive Learn procedure every time the TCM is Quick Learned. Perform only the portions which target the objectionable shift.

LEARN A SMOOTH 1ST NEUTRAL TO DRIVE SHIFT

Perform this procedure only if the complaint is for a delayed or harsh shift the first time the transmission is put into gear after the vehicle is allowed to set with the engine not running for at least 10 minutes. Use the following steps to have the TCM learn the 1st N-D UD CVI.

NOTE: The transmission oil temperature must be between 80 - 110°F (27 - 43°C).

(1) Start the engine only when the engine and ignition have been off for at least ten (10) minutes.

(2) With the vehicle at a stop and the service brake applied, record the 1st N-D UD CVI while performing a Neutral to Drive shift. The 1st N-D UD CVI accounts for air entrapment in the UD clutch that may occur after the engine has been off for a period of time.

(3) Repeat Step 1 and Step 2 until the recorded 1st N-D UD CVI value stabilizes.

NOTE: It is important that this procedure be performed when the transmission temperature is between 80 - 110°F (27 - 43°C). If this procedure takes too long to complete fully for the allowed transmission oil temperature, the vehicle may be returned to the customer with an explanation that the shift will improve daily during normal vehicle usage. The TCM also learns at higher oil temperatures, but these values (line pressure correction values) are not available for viewing on the scan tool.

LEARN A SMOOTH NEUTRAL TO DRIVE GARAGE SHIFT

Perform this procedure if the complaint is for a delayed or harsh shift when the transmission is put into gear after the vehicle has had its first shift. Use the following steps to have the TCM learn the Norm N-D UD CVI.

NOTE: The transmission oil temperature must be between 80 - 110°F (27 - 43°C) to learn the UD CVI. Additional learning occurs at temperatures as low as 0°F and as high as 200°F. This procedure may be performed at any temperature that experiences poor shift quality. Although the UD CVI may not change, shift quality should improve.

(1) Start the vehicle engine and shift to drive.

(2) Move the vehicle forward to a speed of at least 16 km/h (10 MPH) and come to a stop. This ensures no air is present in the UD hydraulic circuit.

(3) Perform repeated N-D shifts at a stop while pausing in Neutral for at least 2-3 seconds and monitor Norm N-D UD CVI volume until the value stabilizes. The value will change during the N-D shift. This is normal since the UD value is different for the N-D shift then the normal value shown which is used for 4-3 coastdown and kickdowns. Perform repeated shifts in this temperature range until the Norm N-D UD CVI value stabilizes and the N-D shifts become smooth.

LEARN THE 1ST 2-3 SHIFT AFTER A RESTART OR SHIFT TO REVERSE

Use the following steps to have the TCM learn the 1st 2-3 shift OD CVI.

NOTE: The transmission oil temperature must be above 80°F (27°C).

(1) With the vehicle engine running, select reverse gear for over 2 seconds.

(2) Shift the transmission to Drive and accelerate the vehicle from a stop at a steady 15 degree throttle opening and perform a 2-3 shift while noting the 1st 2-3 OD CVI.

(3) Repeat Step 1 and Step 2 until the 1st 2-3 upshift becomes smooth and the 1st 2-3 OD CVI stabilizes.

LEARN A SMOOTH 2-3 AND 3-4 UPSHIFT

NOTE: The transmission oil temperature must be above 110°F (43°C).

Use the following steps to have the TCM learn the OD and 4C CVI's.

(1) Accelerate the vehicle from a stop at a steady 15 degree throttle opening and perform multiple 1-2, 2-3, and 3-4 upshifts. The 2nd 2-3 shift following a restart or shift to reverse will be shown during the shift as a value between the 1st 2-3 OD CVI and the normal OD CVI. Updates to the normal OD CVI will occur after the 2nd shift into 3rd gear, following a restart or shift to reverse.

(2) Repeat Step 1 until the 2-3 and 3-4 shifts become smooth and the OD and 4C CVI become stable.

TRANSMISSION CONTROL MODULE (Continued)

LEARN A SMOOTH 4-3 COASTDOWN AND PART THROTTLE 4-3 KICKDOWN

NOTE: The transmission oil temperature must be above 110°F (43°C).

Use the following steps to have the TCM learn the UD shift volume.

(1) At a vehicle speed between 64-97 km/h (40-60 MPH), perform repeated 4-3 kickdown shifts.

(2) Repeat Step 1 until the UD volume becomes somewhat stable and the shift becomes smooth.

LEARN A SMOOTH 1-2 UPSHIFT AND 3-2 KICKDOWN

Use the following steps to have the TCM learn the 2C shift volume.

NOTE: The transmission oil temperature must be above 110°F (43°C).

(1) With a vehicle speed below 48 km/h (30 MPH) and the transmission in 3rd gear, perform multiple 3-2 kickdowns.

(2) Repeat Step 1 until the 3-2 kickdowns become smooth and the 2C CVI becomes stable.

LEARN A SMOOTH MANUAL 2-1 PULLDOWN SHIFT AS WELL AS A NEUTRAL TO REVERSE SHIFT

NOTE: The transmission oil temperature must be above 110°F (43°C).

Use the following steps to have the TCM learn the LR volume.

(1) With the vehicle speed around 40-48 km/h (25-30 MPH) in Manual 2nd, perform manual pull-downs to Low or 1st gear at closed throttle.

(2) Repeat Step 1 until the LR CVI becomes stable and the manual 2-1 becomes smooth.

LEARN A SMOOTH NEUTRAL TO REVERSE SHIFT

NOTE: The transmission oil temperature must be above 110°F (43°C).

(1) With the vehicle at a stop, perform Neutral to Reverse shifts until the shift is smooth. An unlearned Neutral to Reverse shift may be harsh or exhibit a double bump.

(2) If any of the shifts are still not smooth after the clutch volume stabilizes, an internal transmission problem may be present.

LEARN A SMOOTH 4-5 UPSHIFT

NOTE: The transmission oil temperature must be above 110°F (43°C).

Use the following steps to have the TCM learn the Alt 2C CVI.

(1) Accelerate the vehicle through 88 km/h (55mph) at a steady 10-15 degree throttle opening and perform multiple 4-5 upshifts.

(2) Repeat Step 1 until the 4-5 shift become smooth and theAlt 2C CVI become stable. There is a separate 2C volume used and learned for 4-5 shifts, 2CA. It is independent of the 2C CVI learned on 3-2 kickdowns.

HEATED SEAT MODULE

DESCRIPTION

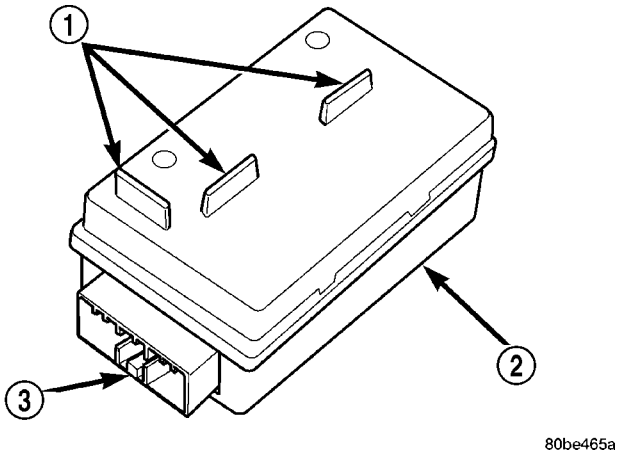

Fig. 23 Heated Seat Module

1 - Mounting Tabs (Not Used On KJ)
2 - Heated Seat Module
3 - Connector Receptacle

The heated seat module is also known as the Seat Heat Interface Module. The heated seat module (Fig. 23) is located under the left front seat cushion, where it is secured to a mounting bracket via two push-pin retainers. The heated seat module has a single connector receptacle that allows the module to be connected to all of the required inputs and outputs through the seat wire harness.

The heated seat module is an electronic microprocessor controlled device designed and programmed to use inputs from the heated seat relay, the two heated seat switches and the two heated seat sensors to operate and control the heated seat elements in both front seats and the two heated seat indicator lamp Light-Emitting Diodes (LEDs) in each heated seat switch. The heated seat module is also programmed to perform self-diagnosis of certain heated seat sys-

HEATED SEAT MODULE (Continued)

tem functions and provide feedback of that diagnosis through the heated seat switch indicator lamps.

The heated seat module cannot be repaired. If the heated seat module is damaged or faulty, the entire module must be replaced.

OPERATION

The heated seat module operates on fused battery current received from a fuse in the junction block. The module is grounded at all times. Inputs to the module include a resistor multiplexed heated seat switch request circuit for each of the two heated seat switches and the heated seat sensor inputs from the seat cushions of each front seat. In response to those inputs, the heated seat module controls battery current to the heated seat elements and sensors, and controls the ground for the heated seat switch indicator lamps (LED's).

When a heated seat switch (Driver or Passenger) is depressed a signal is received by the heated seat module, the module energizes the proper indicator LED (Low or High) in the switch by grounding the indicator lamp circuit to indicate that the heated seat system is operating. At the same time, the heated seat module energizes the selected heated seat sensor circuit and the sensor provides the module with an input indicating the surface temperature of the selected seat cushion.

The Low heat set point is about 36° C (96.8° F), and the High heat set point is about 42° C (107.6° F). If the seat cushion surface temperature input is below the temperature set point for the selected temperature setting, the heated seat module energizes an N-channel Field Effect Transistor (N-FET) within the module which energizes the heated seat elements in the selected seat cushion and back. When the sensor input to the module indicates the correct temperature set point has been achieved, the module de-energizes the N-FET which de-energizes the heated seat elements. The heated seat module will continue to cycle the N-FET as needed to maintain the selected temperature set point.

If the heated seat module detects a heated seat sensor value input that is out of range or a shorted or open heated seat element circuit, it will notify the vehicle operator or the repair technician of this condition by flashing the High and/or Low indicator lamps in the affected heated seat switch. Refer to **Diagnosis and Testing Heated Seat System** in Heated Systems for flashing LED diagnosis and testing procedures. Refer to **Diagnosis and Testing Heated Seat Module** in this section for heated seat module diagnosis and testing procedures. Also refer to the Body Diagnostic Manual for additional diagnosis and testing procedures.

DIAGNOSIS AND TESTING - HEATED SEAT MODULE

If a heated seat fails to heat and one or both of the indicator lamps on a heated seat switch flash, refer to **Heated Seat System Diagnosis and Testing** in Heated Systems for flashing LED failure identification. Refer to **Wiring Diagrams** in for complete heated seat system wiring diagrams.

(1) Remove the heated seat module from its mounting location (Refer to 8 - ELECTRICAL/ELECTRONIC CONTROL MODULES/MEMORY HEATED SEAT/MIRROR MODULE - REMOVAL).

NOTE: ANY RESISTANCE VALUES (OHMS Ω) GIVEN IN THE FOLLOWING TEXT ARE SUPPLIED USING THE AUTOMATIC RANGE GENERATED BY A FLUKE® AUTOMOTIVE METER. IF ANOTHER TYPE OF MEASURING DEVICE IS USED THE VALUES GENERATED MAY NOT BE THE SAME AS THE RESULTS SHOWN HERE, OR MAY HAVE TO BE CONVERTED TO THE RANGE USED HERE.

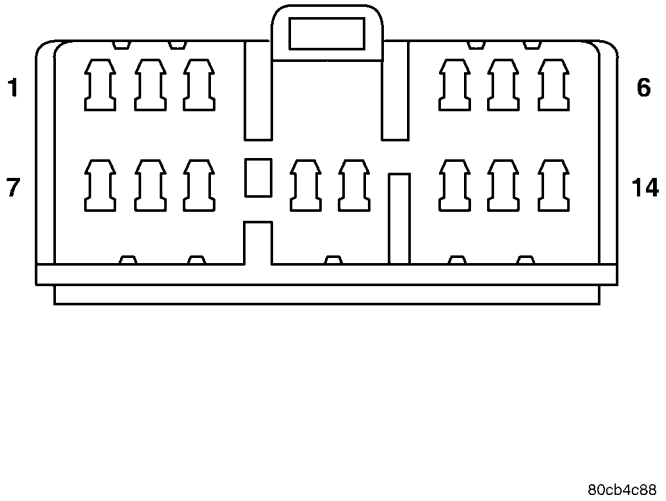

Fig. 24 Heated Seat Module Electrical Connector

RIGHT SEAT HEATER INOPERATIVE

(1) If a heated seat heats but one or both indicator lamps (LED's) on the heated seat switch fail to illuminate, check the driver circuit with the inoperative LED for a short to ground. If OK, replace the heated seat switch. If NOT OK repair the short to ground as required and than replace the heated seat switch.

NOTE: IF THE RIGHT SEAT CUSHION IS ALREADY WARM THE FOLLOWING STEP WILL NOT PROVE CONCLUSIVE.

HEATED SEAT MODULE (Continued)

(2) Back-probe the heated seat module wire harness connector (Fig. 24), do not disconnect. Check cavity #3 for battery voltage when the right heated seat switch is turned "ON", voltage should be present, If OK go to Step 3 If NOT OK, test the right heated seat switch (Refer to 8 - ELECTRICAL/ HEATED SEATS/PASSENGER HEATED SEAT SWITCH - DIAGNOSIS AND TESTING). If the switch tests OK, check for continuity between the switch and control module on the MUX circuit, If OK replace the heated seat control module. If NOT OK, repair the open or shorted MUX circuit as required.

NOTE: BE CERTAIN THE BATTERY IS FULLY CHARGED BEFORE TESTING. FAILURE TO DO SO CAN RESULT IN INCORRECT READINGS.

(3) Back-probe the heated seat module wire harness connector, do not disconnect. Check cavity #10 for battery voltage, while observing the voltmeter depress the right heated seat switch **low** setting twice, voltage should toggle between approx.12v and 8v, If OK go to Step 4. If NOT OK check for continuity between the switch and control module on the low heat driver circuit, If OK replace the heated seat control module.

(4) Back-probe the heated seat module wire harness connector, do not disconnect. Check cavity #11 for battery voltage, while observing the voltmeter depress the right heated seat switch **high** setting twice, voltage should toggle between approx.12v and 8v, If OK go to Step 5. If NOT OK check for continuity between the switch and control module on the high heat driver circuit, If OK replace the heated seat control module.

(5) Back-probe the heated seat module wire harness connector, do not disconnect. Check cavity #2 for approx. 5v, voltage should be present, If OK go to Step 6. If NOT OK replace the heated seat control module.

(6) Back-probe the heated seat module wire harness connector, do not disconnect. Check cavity #7 for a range in voltage from 1.72v (warm seat) – 3.0v (cold seat). It should be within this range, If OK replace the heated seat module. If NOT OK test the Heated Seat Sensor. If NOT OK, replace the right heated seat element and sensor assembly. If the heated seat sensor tests OK, check for continuity between the right heated seat cushion connector and control module connector on the 5v supply circuit, If NOT OK, repair the open or shorted 5v supply circuit as required. If OK check for continuity between the right heated seat cushion connector and control module connector on the temperature sensor input circuit. If NOT OK, repair the open or shorted temperature sensor input circuit as required. If OK replace the heated seat control module.

LEFT SEAT HEATER INOPERATIVE

(1) If a heated seat heats but one or both indicator lamps (LED's) on the heated seat switch fail to illuminate, check the driver circuit with the inoperative LED for a short to ground. If OK, replace the heated seat switch. If NOT OK repair the short to ground as required and than replace the heated seat switch.

NOTE: IF THE LEFT SEAT CUSHION IS ALREADY WARM THE FOLLOWING STEP WILL NOT PROVE CONCLUSIVE.

(2) Back-probe the heated seat module wire harness connector, do not disconnect. Check cavity #5 for battery voltage when the left heated seat switch is turned "ON", voltage should be present, If OK go to Step 3 If NOT OK, test the left heated seat switch (Refer to 8 - ELECTRICAL/HEATED SEATS/ DRIVER HEATED SEAT SWITCH - DIAGNOSIS AND TESTING). If the switch tests OK, check for continuity between the switch and control module on the MUX circuit, If OK replace the heated seat control module. If NOT OK, repair the open or shorted MUX circuit as required.

(3) Back-probe the heated seat module wire harness connector, do not disconnect. Check cavity #12 for battery voltage, while observing the voltmeter depress the left heated seat switch **low** setting twice, voltage should toggle between approx.12v and 8v, If OK go to Step 4. If NOT OK check for continuity between the switch and control module on the low heat driver circuit, If OK replace the heated seat control module.

(4) Back-probe the heated seat module wire harness connector, do not disconnect. Check cavity #14 for battery voltage, while observing the voltmeter depress the left heated seat switch **high** setting twice, voltage should toggle between approx.12v and 8v, If OK go to Step 5. If NOT OK check for continuity between the switch and control module on the high heat driver circuit, If OK replace the heated seat control module.

(5) Back-probe the heated seat module wire harness connector, do not disconnect. Check cavity #2 for approx. 5v, 5 voltage should be present, If OK go to Step 6. If NOT OK replace the heated seat control module.

(6) Back-probe the heated seat module wire harness connector, do not disconnect. Check cavity #8 for a range in voltage from 1.72v (warm seat) – 3.0v (cold seat). It should be within this range, If OK replace the heated seat control module. If NOT OK, test the Heated Seat Sensor. If NOT OK, replace the left heated seat element and sensor assembly. If the heated seat sensor tests OK, check for continuity between the left heated seat cushion connector and control module connector on the 5v supply circuit, If

HEATED SEAT MODULE (Continued)

NOT OK, repair the open or shorted 5v supply circuit as required. If OK check for continuity between the left heated seat cushion connector and control module connector on the temperature sensor input circuit. If NOT OK, repair the open or shorted temperature sensor input circuit as required. If OK replace the heated seat control module.

BOTH SEATS INOPERATIVE

If both seats (driver and passenger) fail to heat and the indicator lamps on the heated seat switches for both seats fail to operate, test the heated seat fuses in the junction block. If the heated seat fuses check OK, go to Step 1.

(1) Back-probe the heated seat module wire harness connector, do not disconnect. Check for continuity between the ground circuit cavity #13 of the heated seat module connector and a good ground. If OK go to Step 2. If NOT OK, repair the open or shorted ground circuit as required.

(2) Back-probe the heated seat module wire harness connector, do not disconnect. Check cavity #4 and #6 for battery voltage, voltage should be present, If OK go to Step 3. If NOT OK repair the open or shorted fused B(+) circuit as required.

(3) Back-probe the heated seat module wire harness connector, do not disconnect. Check cavity #2 for approx. 5v, voltage should be present, replace the heated seat control module with a known good module and verify system operation.

REMOVAL

(1) Working under the front seat cushion (Fig. 25), remove the heated seat module from its mounting bracket by gently prying the module off of the two mounting pushpins.

(2) Disconnect the seat wire harness connector from the connector receptacle on the side of the heated seat module.

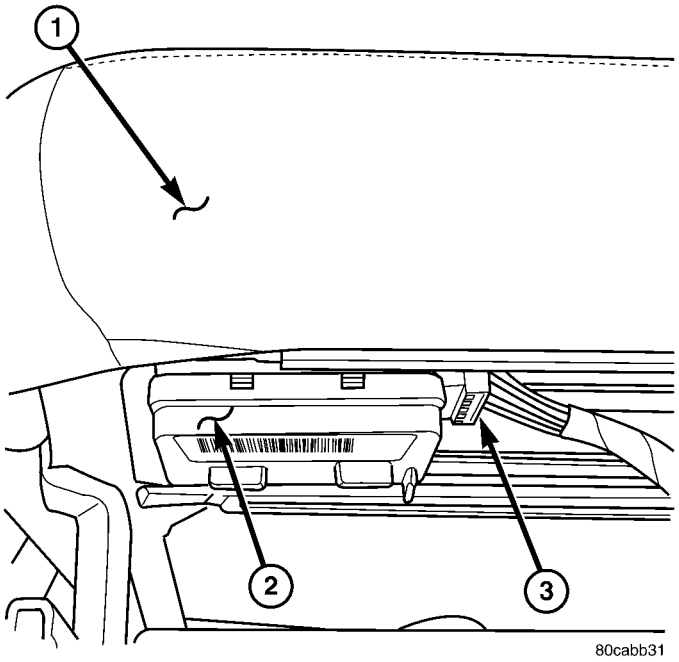

Fig. 25 Heated Seat Module Location

1 - Front Seat Cushion
2 - Heated Seat Module
3 - Electrical Connector

(3) Remove the heated seat module from the vehicle.

INSTALLATION

(1) Connect the seat wire harness connector to the connector receptacle on the side of the heated seat module.

(2) Install the heated seat module on its mounting bracket under the front seat.

(3) Verify heated seat system operation.

ENGINE SYSTEMS

TABLE OF CONTENTS

page

BATTERY SYSTEM 1
CHARGING SYSTEM 22
STARTING SYSTEM 32

BATTERY SYSTEM

TABLE OF CONTENTS

page

BATTERY SYSTEM
DESCRIPTION 1
OPERATION 2
DIAGNOSIS AND TESTING - BATTERY SYSTEM 2
CLEANING 4
INSPECTION 6
SPECIFICATIONS 6
BATTERY
DESCRIPTION 6
OPERATION 7
DIAGNOSIS AND TESTING - BATTERY 8
STANDARD PROCEDURE
STANDARD PROCEDURE - CONVENTIONAL BATTERY CHARGING 9
STANDARD PROCEDURE - SPIRAL PLATE BATTERY CHARGING 10
STANDARD PROCEDURE - BUILT-IN INDICATOR TEST 12
STANDARD PROCEDURE - HYDROMETER TEST 12
STANDARD PROCEDURE - OPEN-CIRCUIT VOLTAGE TEST 13
STANDARD PROCEDURE - IGNITION-OFF DRAW TEST 14
STANDARD PROCEDURE - USING MICRO 420 BATTERY TESTER 16
REMOVAL 17
INSTALLATION 17
BATTERY HOLDDOWN
DESCRIPTION 18
OPERATION 18
REMOVAL 18
INSTALLATION 18
BATTERY CABLES
DESCRIPTION 18
OPERATION 19
DIAGNOSIS AND TESTING - BATTERY CABLES 19
BATTERY TRAY
DESCRIPTION 21
OPERATION 21
REMOVAL 21
INSTALLATION 21

BATTERY SYSTEM

DESCRIPTION

A single 12-volt battery is standard factory-installed equipment on this model. All of the components of the battery system are located within the engine compartment of the vehicle. The battery system for this vehicle covers the following related components, which are covered in further detail later in this section of the service manual:

- **Battery** - The storage battery provides a reliable means of storing a renewable source of electrical energy within the vehicle.
- **Battery Cables** - The battery cables connect the battery terminal posts to the vehicle electrical system.
- **Battery Holddown** - The battery holddown hardware secures the battery in the battery tray in the engine compartment.
- **Battery Tray** - The battery tray provides a secure mounting location in the vehicle for the bat-

tery and an anchor point for the battery holddown hardware.

For battery system maintenance schedules and jump starting procedure, see the owner's manual in the vehicle glove box. Optionally, refer to the Lubrication and Maintenance section of this manual for the recommended battery maintenance schedules and for the proper battery jump starting procedure. While battery charging can be considered a maintenance procedure, the battery charging procedure and related information are located later in this section of the service manual. This was done because the battery must be fully-charged before any battery system diagnosis or testing procedures can be performed.

OPERATION

The battery system is designed to provide a safe, efficient, reliable and mobile means of delivering and storing electrical energy. This electrical energy is required to operate the engine starting system, as well as to operate many of the other vehicle accessory systems for limited durations while the engine and/or the charging system are not operating. The battery system is also designed to provide a reserve of electrical energy to supplement the charging system for short durations while the engine is running and the electrical current demands of the vehicle exceed the output of the charging system. In addition to delivering, and storing electrical energy for the vehicle, the battery system serves as a capacitor and voltage stabilizer for the vehicle electrical system. It absorbs most abnormal or transient voltages caused by the switching of any of the electrical components or circuits in the vehicle.

DIAGNOSIS AND TESTING - BATTERY SYSTEM

The battery, starting, and charging systems in the vehicle operate with one another and must be tested as a complete system. In order for the engine to start and the battery to maintain its charge properly, all of the components that are used in these systems must perform within specifications. It is important that the battery, starting, and charging systems be thoroughly tested and inspected any time a battery needs to be charged or replaced. The cause of abnormal battery discharge, overcharging or early battery failure must be diagnosed and corrected before a battery is replaced and before a vehicle is returned to service. The service information for these systems has been separated within this service manual to make it easier to locate the specific information you are seeking. However, when attempting to diagnose any of these systems, it is important that you keep their interdependency in mind.

The diagnostic procedures used for the battery, starting, and charging systems include the most basic conventional diagnostic methods, to the more sophisticated On-Board Diagnostics (OBD) built into the Powertrain Control Module (PCM). Use of an induction-type milliampere ammeter, a volt/ohmmeter, a battery charger, a carbon pile rheostat (load tester) and a 12-volt test lamp may be required. All OBD-sensed systems are monitored by the PCM. Each monitored circuit is assigned a Diagnostic Trouble Code (DTC). The PCM will store a DTC in electronic memory for any failure it detects. Refer to Charging System for the proper charging system onboard diagnostic test procedures.

MICRO 420 BATTERY TESTER

The Micro 420 automotive battery tester is designed to help the dealership technicians diagnose the cause of a defective battery. Follow the instruction manual supplied with the tester to properly diagnose a vehicle. If the instruction manual is not available refer to the standard procedure in this section, which includes the directions for using the Micro 420 battery tester.

BATTERY SYSTEM (Continued)

BATTERY SYSTEM DIAGNOSIS		
CONDITION	POSSIBLE CAUSES	CORRECTION
THE BATTERY SEEMS WEAK OR DEAD WHEN ATTEMPTING TO START THE ENGINE.	1. The electrical system ignition-off draw is excessive.	1. Refer to the IGNITION-OFF DRAW TEST Standard Procedure for the proper test procedures. Repair the excessive ignition-off draw, as required.
	2. The charging system is faulty.	2. Determine if the charging system is performing to specifications. Refer to Charging System for additional charging system diagnosis and testing procedures. Repair the faulty charging system, as required.
	3. The battery is discharged.	3. Determine the battery state-of-charge using the Micro 420 battery tester. Refer to the Standard Procedures in this section for additional test procedures. Charge the faulty battery, as required.
	4. The battery terminal connections are loose or corroded.	4. Refer to Battery Cables for the proper battery cable diagnosis and testing procedures. Clean and tighten the battery terminal connections, as required.
	5. The battery has an incorrect size or rating for this vehicle.	5. Refer to Battery System Specifications for the proper size and rating. Replace an incorrect battery, as required.
	6. The battery is faulty.	6. Determine the battery cranking capacity using the Micro 420 battery tester. Refer to the Standard Procedures in this section for additional test procedures. Replace the faulty battery, as required.
	7. The starting system is faulty.	7. Determine if the starting system is performing to specifications. Refer to Starting System for the proper starting system diagnosis and testing procedures. Repair the faulty starting system, as required.
	8. The battery is physically damaged.	8. Inspect the battery for loose terminal posts or a cracked and leaking case. Replace the damaged battery, as required.

BATTERY SYSTEM (Continued)

BATTERY SYSTEM DIAGNOSIS		
CONDITION	POSSIBLE CAUSES	CORRECTION
THE BATTERY STATE OF CHARGE CANNOT BE MAINTAINED.	1. The battery has an incorrect size or rating for this vehicle.	1. Refer to Battery System Specifications for the proper specifications. Replace an incorrect battery, as required.
	2. The battery terminal connections are loose or corroded.	2. Refer to Battery Cable for the proper cable diagnosis and testing procedures. Clean and tighten the battery terminal connections, as required.
	3. The electrical system ignition-off draw is excessive.	3. Refer to the IGNITION-OFF DRAW TEST Standard Procedure for the proper test procedures. Repair the faulty electrical system, as required.
	4. The battery is faulty.	4. Test the battery using the Micro 420 battery tester. Refer to Standard Procedures for additional test procedures. Replace the faulty battery, as required.
	5. The starting system is faulty.	5. Determine if the starting system is performing to specifications. Refer to Starting System for the proper starting system diagnosis and testing procedures. Repair the faulty starting system, as required.
	6. The charging system is faulty.	6. Determine if the charging system is performing to specifications. Refer to Charging System for additional charging system diagnosis and testing procedures. Repair the faulty charging system, as required.
	7. Electrical loads exceed the output of the charging system.	7. Inspect the vehicle for aftermarket electrical equipment which might cause excessive electrical loads.
	8. Slow driving or prolonged idling with high-amperage draw systems in use.	8. Advise the vehicle operator, as required.
THE BATTERY WILL NOT ACCEPT A CHARGE.	1. The battery is faulty.	1. Test the battery using the Micro 420 battery tester. Charge or replace the faulty battery, as required.

ABNORMAL BATTERY DISCHARGING

Any of the following conditions can result in abnormal battery discharging:

1. A faulty or incorrect charging system component. Refer to Charging System for additional charging system diagnosis and testing procedures.
2. A faulty or incorrect battery. Use Micro 420 battery tester and refer to Battery System for additional battery diagnosis and testing procedures.
3. A faulty circuit or component causing excessive ignition-off draw.
4. Electrical loads that exceed the output of the charging system. This can be due to equipment installed after manufacture, or repeated short trip use.
5. A faulty or incorrect starting system component. Refer to Starting System for the proper starting system diagnosis and testing procedures.
6. Corroded or loose battery posts and/or terminal clamps.
7. Slow driving speeds (heavy traffic conditions) or prolonged idling, with high-amperage draw systems in use.

CLEANING

The following information details the recommended cleaning procedures for the battery and related com-

BATTERY SYSTEM (Continued)

ponents. In addition to the maintenance schedules found in this service manual and the owner's manual, it is recommended that these procedures be performed any time the battery or related components must be removed for vehicle service.

(1) Clean the battery cable terminal clamps of all corrosion. Remove any corrosion using a wire brush or a post and terminal cleaning tool, and a sodium bicarbonate (baking soda) and warm water cleaning solution (Fig. 1).

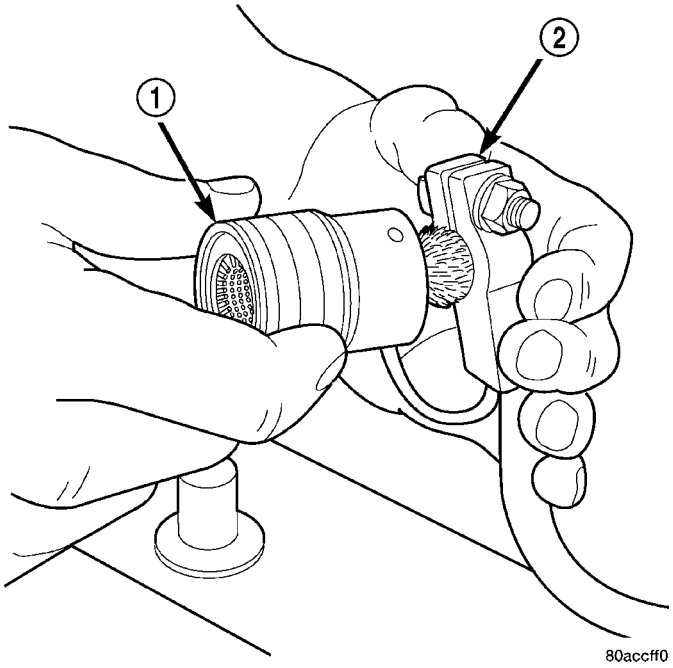

Fig. 1 Clean Battery Cable Terminal Clamp - Typical

1 - TERMINAL BRUSH
2 - BATTERY CABLE

(2) Clean the battery tray and battery hold down hardware of all corrosion. Remove any corrosion using a wire brush and a sodium bicarbonate (baking soda) and warm water cleaning solution. Paint any exposed bare metal.

(3) If the removed battery is to be reinstalled, clean the outside of the battery case and the top cover with a sodium bicarbonate (baking soda) and warm water cleaning solution using a stiff bristle parts cleaning brush to remove any acid film (Fig. 2). Rinse the battery with clean water. Ensure that the cleaning solution does not enter the battery cells through the vent holes. If the battery is being replaced, refer to Battery System Specifications for the factory-installed battery specifications. Confirm that the replacement battery is the correct size and has the correct ratings for the vehicle.

(4) If the vehicle is so equipped, clean the battery thermal guard with a sodium bicarbonate (baking soda) and warm water cleaning solution using a stiff bristle parts cleaning brush to remove any acid film.

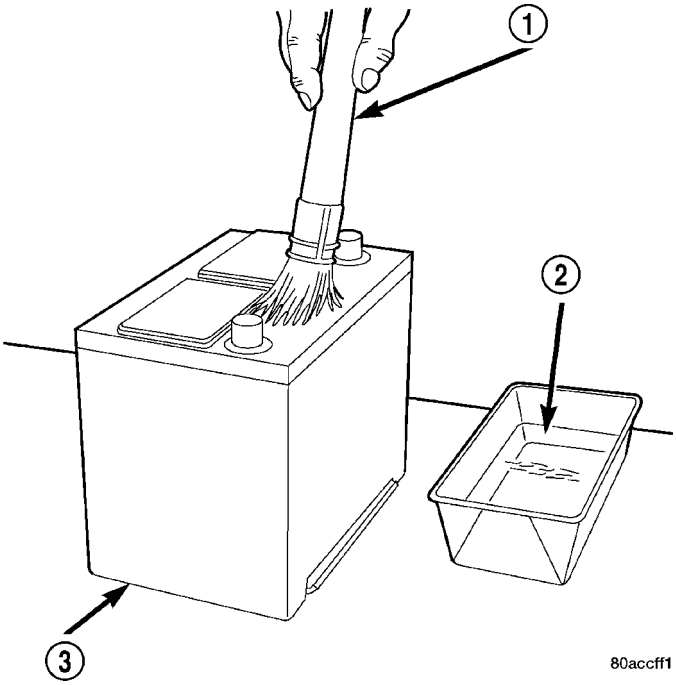

Fig. 2 Clean Battery - Typical

1 - CLEANING BRUSH
2 - WARM WATER AND BAKING SODA SOLUTION
3 - BATTERY

(5) Clean any corrosion from the battery terminal posts with a wire brush or a post and terminal cleaner, and a sodium bicarbonate (baking soda) and warm water cleaning solution (Fig. 3).

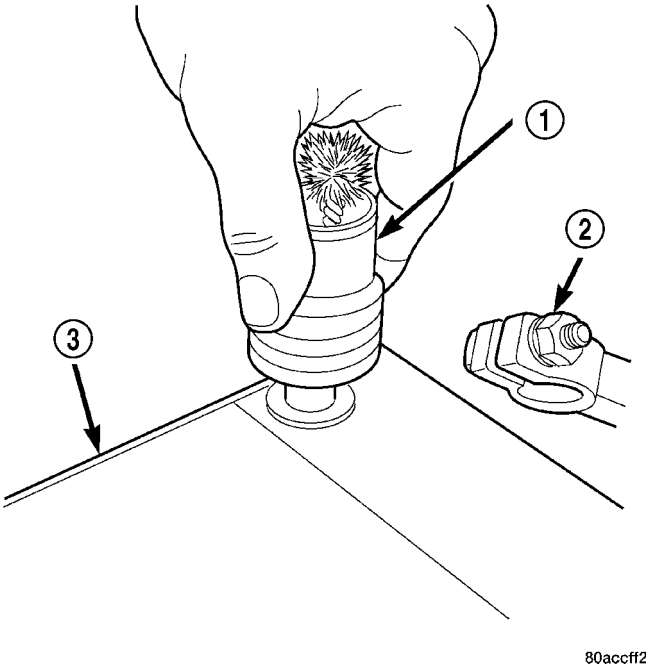

Fig. 3 Clean Battery Terminal Post - Typical

1 - TERMINAL BRUSH
2 - BATTERY CABLE
3 - BATTERY

BATTERY SYSTEM (Continued)

INSPECTION

The following information details the recommended inspection procedures for the battery and related components. In addition to the maintenance schedules found in this service manual and the owner's manual, it is recommended that these procedures be performed any time the battery or related components must be removed for vehicle service.

(1) Inspect the battery cable terminal clamps for damage. Replace any battery cable that has a damaged or deformed terminal clamp.

(2) Inspect the battery tray and battery holddown hardware for damage. Replace any damaged parts.

(3) Slide the thermal guard off of the battery case. Inspect the battery case for cracks or other damage that could result in electrolyte leaks. Also, check the battery terminal posts for looseness. Batteries with damaged cases or loose terminal posts must be replaced.

(4) Inspect the battery thermal guard for tears, cracks, deformation or other damage. Replace any battery thermal guard that has been damaged.

(5) Inspect the battery built-in test indicator sight glass for an indication of the battery condition. If the battery is discharged, charge as required. Refer to Standard Procedures for the proper battery built-in indicator test procedures. Also refer to Standard Procedures for the proper battery charging procedures.

SPECIFICATIONS

The battery Group Size number, the Cold Cranking Amperage (CCA) rating, and the Reserve Capacity (RC) rating or Ampere-Hours (AH) rating can be found on the original equipment battery label. Be certain that a replacement battery has the correct Group Size number, as well as CCA, and RC or AH ratings that equal or exceed the original equipment specification for the vehicle being serviced. Battery sizes and ratings are discussed in more detail below.

- **Group Size** - The outside dimensions and terminal placement of the battery conform to standards established by the Battery Council International (BCI). Each battery is assigned a BCI Group Size number to help identify a correctly-sized replacement.
- **Cold Cranking Amperage** - The Cold Cranking Amperage (CCA) rating specifies how much current (in amperes) the battery can deliver for thirty seconds at -18° C (0° F). Terminal voltage must not fall below 7.2 volts during or after the thirty second discharge period. The CCA required is generally higher as engine displacement increases, depending also upon the starter current draw requirements.
- **Reserve Capacity** - The Reserve Capacity (RC) rating specifies the time (in minutes) it takes for battery terminal voltage to fall below 10.5 volts, at a discharge rate of 25 amperes. RC is determined with the battery fully-charged at 26.7° C (80° F). This rating estimates how long the battery might last after a charging system failure, under minimum electrical load.
- **Ampere-Hours** - The Ampere-Hours (AH) rating specifies the current (in amperes) that a battery can deliver steadily for twenty hours, with the voltage in the battery not falling below 10.5 volts. This rating is also sometimes identified as the twenty-hour discharge rating.

BATTERY CLASSIFICATIONS & RATINGS					
Part Number	BCI Group Size Classification	Cold Cranking Amperage	Reserve Capacity	Ampere - Hours	Load Test Amperage
56041380AA	86	525	100 Minutes	60	250

BATTERY

DESCRIPTION

CONVENTIONAL BATTERY - GASOLINE ENGINES

A conventional large capacity, low-maintenance storage battery (Fig. 4) is standard factory-installed equipment on models equipped with a gasoline engine. Refer to Battery Specifications for the proper specifications of the factory-installed batteries available on this model. Male post type terminals made of a soft lead material protrude from the top of the molded plastic battery case to provide the means for connecting the battery to the vehicle electrical system. The battery positive terminal post is physically larger in diameter than the negative terminal post to ensure proper battery connection. The letters **POS** and **NEG** are also molded into the top of the battery case adjacent to their respective positive and negative terminal posts for identification confirmation. Refer to Battery Cables for more information on the battery cables that connect the battery to the vehicle electrical system.

The battery is made up of six individual cells that are connected in series. Each cell contains positively charged plate groups that are connected with lead straps to the positive terminal post, and negatively charged plate groups that are connected with lead

BATTERY (Continued)

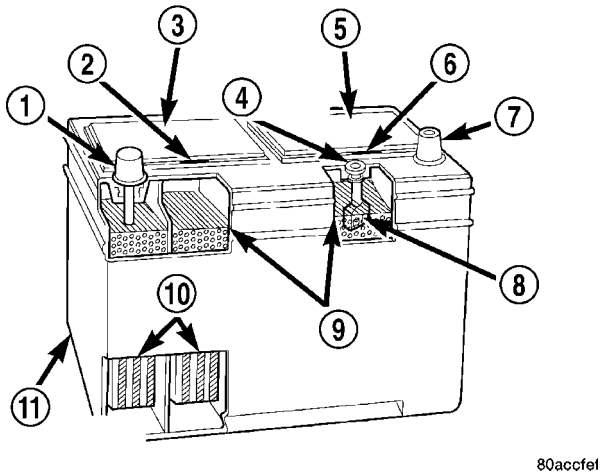

Fig. 4 Low-Maintenance Battery - Typical

1 - POSITIVE POST
2 - VENT
3 - CELL CAP
4 - VENT
5 - CELL CAP
6 - VENT
7 - NEGATIVE POST
8 - GREEN BALL
9 - ELECTROLYTE LEVEL
10 - PLATE GROUPS
11 - LOW-MAINTENANCE BATTERY

straps to the negative terminal post. Each plate consists of a stiff mesh framework or grid coated with lead dioxide (positive plate) or sponge lead (negative plate). Insulators or plate separators made of a non-conductive material are inserted between the positive and negative plates to prevent them from contacting or shorting against one another. These dissimilar metal plates are submerged in a sulfuric acid and water solution called an electrolyte.

The factory-installed battery has a built-in test indicator (hydrometer). The color visible in the sight glass of the indicator will reveal the battery condition. Refer to Standard Procedures for the proper built-in indicator test procedures. **The factory-installed low-maintenance battery has removable battery cell caps.** Distilled water can be added to this battery. The battery is not sealed and has vent holes in the cell caps. The chemical composition of the metal coated plates within the low-maintenance battery reduces battery gassing and water loss, at normal charge and discharge rates. Therefore, the battery should not require additional water in normal service. If the electrolyte level in this battery does become low, water must be added. However, rapid loss of electrolyte can be caused by an overcharging condition. Be certain to diagnose the charging system after replenishing the water in the battery for a low electrolyte condition and before returning the vehicle to service. Refer to Charging System for the proper charging system diagnosis and testing procedures.

SPIRAL PLATE BATTERY - DIESEL ENGINE

Vehicles equipped with a diesel engine utilize a spiral wound plate designed battery with recombination technology. This is a maintenance-free battery that is capable of delivering more power than a conventional battery. This additional power is required by a diesel engine during cold cranking.

Spiral plate technology takes the elements of traditional batteries - lead and sulfuric acid - to the next level. By tightly winding layers of spiral grids and acid-permeated vitreous separators into cells, the manufacturer has developed a battery with more power and service life than conventional batteries the same size. The spiral plate battery is completely, permanently sealed. Through gas recombination, hydrogen and oxygen within the battery are captured during normal charging and reunited to form the water within the electrolyte, eliminating the need to add distilled water. Therefore, these batteries have non-removable battery vent caps. Water **cannot** be added to this battery.

The acid inside an spiral plate battery is bound within the vitreous separators, ending the threat of acid leaks. This feature allows the battery to be installed in any position anywhere in the vehicle.

Spiral plate technology is the process by which the plates holding the active material in the battery are wound tightly in coils instead of hanging flat, like conventional batteries. This design has a lower internal resistance and also increases the active material surface area.

WARNING: NEVER EXCEED 14.4 VOLTS WHEN CHARGING A SPIRAL PLATE BATTERY. PERSONAL INJURY AND/OR BATTERY DAMAGE MAY RESULT.

Due to the maintenance-free design, distilled water cannot be added to this battery. Therefore, if more than 14.4 volts are used during the spiral plate battery charging process, water vapor can be exhausted through the pressure-sensitive battery vents and lost for good. This can permanently damage the spiral plate battery. Never exceed 14.4 volts when charging a spiral plate battery. Personal injury and/or battery damage may result.

Batteries are used to store electrical energy potential in a chemical form. When an electrical load is applied to the battery terminals, an electrochemical reaction occurs within the battery. This reaction causes the battery to discharge electrical current.

OPERATION

The battery is designed to store electrical energy in a chemical form. When an electrical load is applied to

BATTERY (Continued)

the terminals of the battery, an electrochemical reaction occurs. This reaction causes the battery to discharge electrical current from its terminals. As the battery discharges, a gradual chemical change takes place within each cell. The sulfuric acid in the electrolyte combines with the plate materials, causing both plates to slowly change to lead sulfate. At the same time, oxygen from the positive plate material combines with hydrogen from the sulfuric acid, causing the electrolyte to become mainly water. The chemical changes within the battery are caused by the movement of excess or free electrons between the positive and negative plate groups. This movement of electrons produces a flow of electrical current through the load device attached to the battery terminals.

As the plate materials become more similar chemically, and the electrolyte becomes less acid, the voltage potential of each cell is reduced. However, by charging the battery with a voltage higher than that of the battery itself, the battery discharging process is reversed. Charging the battery gradually changes the sulfated lead plates back into sponge lead and lead dioxide, and the water back into sulfuric acid. This action restores the difference in the electron charges deposited on the plates, and the voltage potential of the battery cells. For a battery to remain useful, it must be able to produce high-amperage current over an extended period. A battery must also be able to accept a charge, so that its voltage potential may be restored.

The battery is vented to release excess hydrogen gas that is created when the battery is being charged or discharged. However, even with these vents, hydrogen gas can collect in or around the battery. If hydrogen gas is exposed to flame or sparks, it may ignite. If the electrolyte level is low, the battery may arc internally and explode. If the battery is equipped with removable cell caps, add distilled water whenever the electrolyte level is below the top of the plates. If the battery cell caps cannot be removed, the battery must be replaced if the electrolyte level becomes low.

DIAGNOSIS AND TESTING - BATTERY

The battery must be completely charged and the top, posts and terminal clamps should be properly cleaned and inspected before diagnostic procedures are performed. Refer to Battery System Cleaning for the proper cleaning procedures, and Battery System Inspection for the proper battery inspection procedures. Refer to Standard Procedures for the proper battery charging procedures.

WARNING: IF THE BATTERY SHOWS SIGNS OF FREEZING, LEAKING OR LOOSE POSTS, DO NOT TEST, ASSIST-BOOST, OR CHARGE. THE BATTERY MAY ARC INTERNALLY AND EXPLODE. PERSONAL INJURY AND/OR VEHICLE DAMAGE MAY RESULT.

WARNING: EXPLOSIVE HYDROGEN GAS FORMS IN AND AROUND THE BATTERY. DO NOT SMOKE, USE FLAME, OR CREATE SPARKS NEAR THE BATTERY. PERSONAL INJURY AND/OR VEHICLE DAMAGE MAY RESULT.

WARNING: THE BATTERY CONTAINS SULFURIC ACID, WHICH IS POISONOUS AND CAUSTIC. AVOID CONTACT WITH THE SKIN, EYES, OR CLOTHING. IN THE EVENT OF CONTACT, FLUSH WITH WATER AND CALL A PHYSICIAN IMMEDIATELY. KEEP OUT OF THE REACH OF CHILDREN.

WARNING: IF THE BATTERY IS EQUIPPED WITH REMOVABLE CELL CAPS, BE CERTAIN THAT EACH OF THE CELL CAPS ARE IN PLACE AND TIGHT BEFORE THE BATTERY IS RETURNED TO SERVICE. PERSONAL INJURY AND/OR VEHICLE DAMAGE MAY RESULT FROM LOOSE OR MISSING CELL CAPS.

The condition of a battery is determined by two criteria:

1. **State-Of-Charge** - This can be determined by checking the specific gravity of the battery electrolyte (built-in indicator test or hydrometer test), or by checking the battery voltage (open-circuit voltage test).
2. **Cranking Capacity** - This can be determined by performing a battery load test, which measures the ability of the battery to supply high-amperage current.

First, determine the battery state-of-charge. This can be done numerous ways. The Micro 420 battery tester is recommended. If the battery has a built-in test indicator, perform the built-in indicator test to determine the state-of-charge. If the battery has no built-in test indicator but does have removable cell caps, perform the hydrometer test to determine the state-of-charge. If the battery cell caps are not removable, or a hydrometer is not available, perform the open-circuit voltage test to determine the state-of-charge. Refer to open-circuit voltage test in the Standard Procedures section of this group.

Second, determine the battery cranking capacity by performing a load test. The battery must be charged before proceeding with a load test if:

- Micro 420 tester indicates battery charging is required.
- The battery built-in test indicator has a black or dark color visible.

BATTERY (Continued)

- The temperature corrected specific gravity of the battery electrolyte is less than 1.235.
- The battery open-circuit voltage is less than 12.4 volts.

A battery that will not accept a charge is faulty, and must be replaced. Further testing is not required. A fully-charged battery must be load tested to determine its cranking capacity. A battery that is fully-charged, but does not pass the load test, is faulty and must be replaced.

NOTE: Completely discharged batteries may take several hours to accept a charge. Refer to Standard Procedures for the proper battery charging procedures.

A battery is fully-charged when:

- Micro 420 tester indicates battery is OK.
- A green color is visible in the sight glass of the battery built-in test indicator.
- Three corrected specific gravity tests, taken at one-hour intervals, indicate no increase in the specific gravity of the battery electrolyte.
- Open-circuit voltage of the battery is 12.4 volts or greater.

STANDARD PROCEDURE

STANDARD PROCEDURE - CONVENTIONAL BATTERY CHARGING

Battery charging can be performed fast or slow, it terms of time. **Slow** battery charging is the best means of restoring a battery to full potential. Fast battery charging should only be performed when absolutely necessary due to time restraints. A battery is fully-charged when:

- Micro 420 tester indicates the battery is OK.
- A green color is visible in the sight glass of the battery built-in test indicator.
- Open-circuit voltage of the battery is 12.65 volts or above.

WARNING: NEVER EXCEED TWENTY AMPERES WHEN CHARGING A COLD (-1° C [30° F] OR LOWER) BATTERY. THE BATTERY MAY ARC INTERNALLY AND EXPLODE. PERSONAL INJURY AND/OR VEHICLE DAMAGE MAY RESULT.

CAUTION: Always disconnect and isolate the battery negative cable before charging a battery. Do not exceed sixteen volts while charging a battery. Damage to the vehicle electrical system components may result.

CAUTION: Battery electrolyte will bubble inside the battery case during normal battery charging. Electrolyte boiling or being discharged from the battery vents indicates a battery overcharging condition. Immediately reduce the charging rate or turn off the charger to evaluate the battery condition. Damage to the battery may result from overcharging.

CAUTION: The battery should not be hot to the touch. If the battery feels hot to the touch, turn off the charger and let the battery cool before continuing the charging operation. Damage to the battery may result.

Some battery chargers are equipped with polarity-sensing circuitry. This circuitry protects the battery charger and the battery from being damaged if they are improperly connected. If the battery state-of-charge is too low for the polarity-sensing circuitry to detect, the battery charger will not operate. This makes it appear that the battery will not accept charging current. See the instructions provided by the manufacturer of the battery charger for details on how to bypass the polarity-sensing circuitry.

After the battery has been charged to 12.4 volts or greater, perform a load test to determine the battery cranking capacity. Refer to Standard Procedures for the proper battery load test procedures. If the battery will endure a load test, return the battery to service. If the battery will not endure a load test, it is faulty and must be replaced.

Clean and inspect the battery hold downs, tray, terminals, posts, and top before completing battery service. Refer to Battery System Cleaning for the proper battery system cleaning procedures, and Battery System Inspection for the proper battery system inspection procedures.

CHARGING A COMPLETELY DISCHARGED BATTERY

The following procedure should be used to recharge a completely discharged battery. Unless this procedure is properly followed, a good battery may be needlessly replaced.

(1) Measure the voltage at the battery posts with a voltmeter, accurate to 1/10 (0.10) volt (Fig. 5). If the reading is below ten volts, the battery charging current will be low. It could take some time before the battery accepts a current greater than a few milliamperes. Such low current may not be detectable on the ammeters built into many battery chargers.

(2) Disconnect and isolate the battery negative cable. Connect the battery charger leads. Some battery chargers are equipped with polarity-sensing circuitry. This circuitry protects the battery charger and the battery from being damaged if they are improp-

BATTERY (Continued)

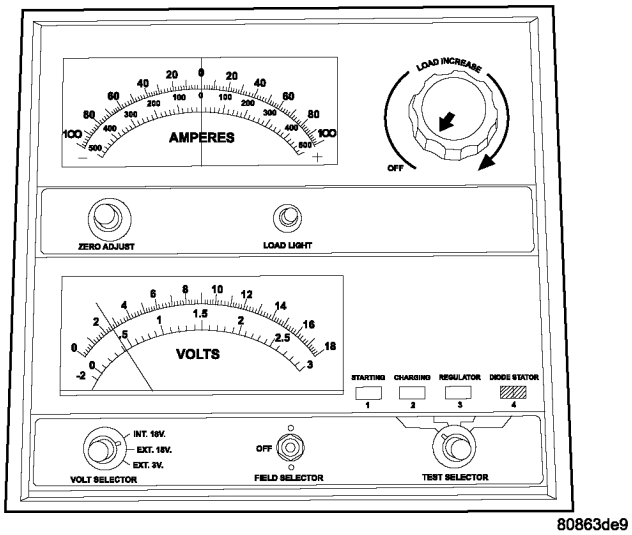

Fig. 5 VOLTMETER ACCURATE TO 1/10 VOLT

erly connected. If the battery state-of-charge is too low for the polarity-sensing circuitry to detect, the battery charger will not operate. This makes it appear that the battery will not accept charging current. See the instructions provided by the manufacturer of the battery charger for details on how to bypass the polarity-sensing circuitry.

(3) Battery chargers vary in the amount of voltage and current they provide. The amount of time required for a battery to accept measurable charging current at various voltages is shown in the Charge Rate Table. If the charging current is still not measurable at the end of the charging time, the battery is faulty and must be replaced. If the charging current is measurable during the charging time, the battery may be good and the charging should be completed in the normal manner.

CHARGE RATE TABLE	
Voltage	Hours
16.0 volts maximum	up to 4 hours
14.0 to 15.9 volts	up to 8 hours
13.9 volts or less	up to 16 hours

CHARGING TIME REQUIRED

The time required to charge a battery will vary, depending upon the following factors:

- **Battery Capacity** - A completely discharged heavy-duty battery requires twice the charging time of a small capacity battery.
- **Temperature** - A longer time will be needed to charge a battery at -18° C (0° F) than at 27° C (80° F). When a fast battery charger is connected to a cold battery, the current accepted by the battery will be very low at first. As the battery warms, it will accept a higher charging current rate (amperage).
- **Charger Capacity** - A battery charger that supplies only five amperes will require a longer charging time. A battery charger that supplies twenty amperes or more will require a shorter charging time.
- **State-Of-Charge** - A completely discharged battery requires more charging time than a partially discharged battery. Electrolyte is nearly pure water in a completely discharged battery. At first, the charging current (amperage) will be low. As the battery charges, the specific gravity of the electrolyte will gradually rise.

The Battery Charging Time Table gives an indication of the time required to charge a typical battery at room temperature based upon the battery state-of-charge and the charger capacity.

BATTERY CHARGING TIME TABLE			
Charging Amperage	5 Amps	10 Amps	20 Amps
Open Circuit Voltage	Hours Charging @ 21° C (70° F)		
12.25 to 12.49	6 hours	3 hours	1.5 hours
12.00 to 12.24	10 hours	5 hours	2.5 hours
10.00 to 11.99	14 hours	7 hours	3.5 hours
Below 10.00	18 hours	9 hours	4.5 hours

STANDARD PROCEDURE - SPIRAL PLATE BATTERY CHARGING

Vehicles equipped with a diesel engine utilize a unique spiral plate battery. This battery has a maximum charging voltage that must not be exceeded in order to restore the battery to its full potential, failure to use the following spiral plate battery charging procedure could result in damage to the battery or personal injury.

Battery charging is the means by which the battery can be restored to its full voltage potential. A battery is fully-charged when:

- Micro 420 battery tester indicates battery is OK.
- Open-circuit voltage of the battery is 12.65 volts or above.
- Battery passes Load Test multiple times.

BATTERY (Continued)

WARNING: IF THE BATTERY SHOWS SIGNS OF FREEZING, LEAKING, LOOSE POSTS OR LOW ELECTROLYTE LEVEL, DO NOT TEST, ASSIST-BOOST, OR CHARGE. THE BATTERY MAY ARC INTERNALLY AND EXPLODE. PERSONAL INJURY AND/OR VEHICLE DAMAGE MAY RESULT.

CAUTION: Always disconnect and isolate the battery negative cable before charging a battery. Charge the battery directly at the battery terminals. Do not exceed 14.4 volts while charging a battery.

CAUTION: The battery should not be hot to the touch. If the battery feels hot to the touch, turn off the charger and let the battery cool before continuing the charging operation. Damage to the battery may result.

After the battery has been charged to 12.6 volts or greater, perform a load test to determine the battery cranking capacity. Refer to Battery Diagnosis and Testing for the proper battery test procedures. If the battery will endure a load test, return the battery to service. If the battery will not pass a load test, it is faulty and must be replaced.

Clean and inspect the battery hold downs, tray, terminals, posts, and top before completing battery service. Refer to Battery System Cleaning for the proper battery system cleaning procedures, and Battery System Inspection for the proper battery system inspection procedures.

CHARGING A COMPLETELY DISCHARGED BATTERY – SPIRAL PLATE BATTERY

The following procedure should be used to recharge a completely discharged battery. Unless this procedure is properly followed, a good battery may be needlessly replaced.

(1) Measure the voltage at the battery posts with a voltmeter, accurate to 1/10 (0.10) volt (Fig. 6). Refer to Battery Removal and Installation for access instructions. If the reading is below ten volts, the battery charging current will be low. It could take several hours before the battery accepts a current greater than a few milliamperes. Such low current may not be detectable on the ammeters built into many battery chargers.

(2) Disconnect and isolate the battery negative cable. Connect the battery charger leads. Some battery chargers are equipped with polarity-sensing circuitry. This circuitry protects the battery charger and the battery from being damaged if they are improperly connected. If the battery state-of-charge is too low for the polarity-sensing circuitry to detect, the battery charger will not operate. This makes it

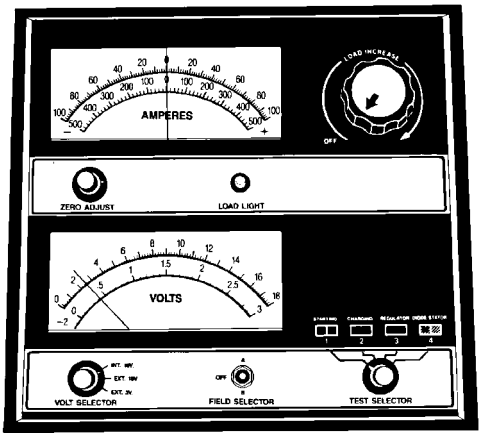

898A-12

Fig. 6 VOLTMETER ACCURATE TO 1/10 VOLT

appear that the battery will not accept charging current. See the instructions provided by the manufacturer of the battery charger for details on how to bypass the polarity-sensing circuitry.

(3) Battery chargers vary in the amount of voltage and current they provide. The amount of time required for a battery to accept measurable charging current at various voltages is shown in the Charge Rate Table. If the charging current is still not measurable at the end of the charging time, the battery is faulty and must be replaced. If the charging current is measurable during the charging time, the battery may be good and the charging should be completed in the normal manner.

SPIRAL-PLATE BATTERY CHARGE RATE TABLE	
Voltage	Minutes
14.4 volts maximum	up to 10 minutes
13.0 to 14 volts	up to 20 minutes
12.9 volts or less	up to 30 minutes

CHARGING TIME REQUIRED

The time required to charge a battery will vary, depending upon the following factors:

- **Battery Capacity** - A completely discharged heavy-duty battery requires twice the charging time of a small capacity battery.
- **Temperature** - A longer time will be needed to charge a battery at -18° C (0° F) than at 27° C (80° F). When a fast battery charger is connected to a cold battery, the current accepted by the battery will be very low at first. As the battery warms, it will accept a higher charging current rate (amperage).
- **Charger Capacity** - A battery charger that supplies only five amperes will require a longer charging time. A battery charger that supplies eight amperes will require a shorter charging time.
- **State-Of-Charge** - A completely discharged battery requires more charging time than a partially

BATTERY (Continued)

discharged battery. Electrolyte is nearly pure water in a completely discharged battery. At first, the charging current (amperage) will be low. As the battery charges, the specific gravity of the electrolyte will gradually rise.

The Battery Charging Time Table gives an indication of the time required to charge a typical battery at room temperature based upon the battery state-of-charge and the charger capacity.

SPIRAL-PLATE BATTERY CHARGING TIME TABLE		
Charging Amperage	5 Amps	8 Amps
Open Circuit Voltage	Hours Charging @ 21° C (70° F)	
12.25 to 12.49	6 hours	3 hours
12.00 to 12.24	10 hours	5 hours
10.00 to 11.99	14 hours	7 hours
Below 10.00	18 hours	9 hours

STANDARD PROCEDURE - BUILT-IN INDICATOR TEST

An indicator (hydrometer) built into the top of the battery case provides visual information for battery testing (Fig. 7). Like a hydrometer, the built-in indicator measures the specific gravity of the battery electrolyte. The specific gravity of the electrolyte reveals the battery state-of-charge; however, it will not reveal the cranking capacity of the battery. A load test must be performed to determine the battery cranking capacity. Refer to Standard Procedures for the proper battery load test procedures.

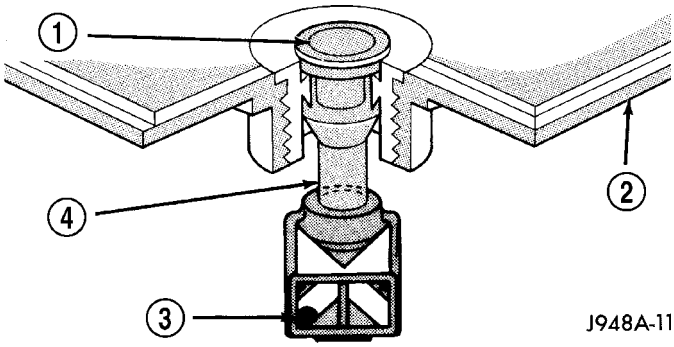

Fig. 7 Built-In Test Indicator

1 - SIGHT GLASS
2 - BATTERY TOP
3 - GREEN BALL
4 - PLASTIC ROD

Before testing, visually inspect the battery for any damage (a cracked case or cover, loose posts, etc.) that would cause the battery to be faulty. In order to obtain correct indications from the built-in indicator, it is important that the battery be level and have a clean sight glass. Additional light may be required to view the indicator. **Do not use open flame as a source of additional light.**

To read the built-in indicator, look into the sight glass and note the color of the indication (Fig. 8). The battery condition that each color indicates is described in the following list:

- **Green** - Indicates 75% to 100% battery state-of-charge. The battery is adequately charged for further testing or return to service. If the starter will not crank for a minimum of fifteen seconds with a fully-charged battery, the battery must be load tested. Refer to Standard Procedures for the proper battery load test procedures.
- **Black or Dark** - Indicates 0% to 75% battery state-of-charge. The battery is inadequately charged and must be charged until a green indication is visible in the sight glass (12.4 volts or more), before the battery is tested further or returned to service. Refer to Standard Procedures for the proper battery charging procedures. Also refer to Diagnosis and Testing for more information on the possible causes of the discharged battery condition.
- **Clear or Bright** - Indicates a low battery electrolyte level. The electrolyte level in the battery is below the built-in indicator. A maintenance-free battery with non-removable cell caps must be replaced if the electrolyte level is low. Water must be added to a low-maintenance battery with removable cell caps before it is charged. Refer to Standard Procedures for the proper battery filling procedures. A low electrolyte level may be caused by an overcharging condition. Refer to Charging System for the proper charging system diagnosis and testing procedures.

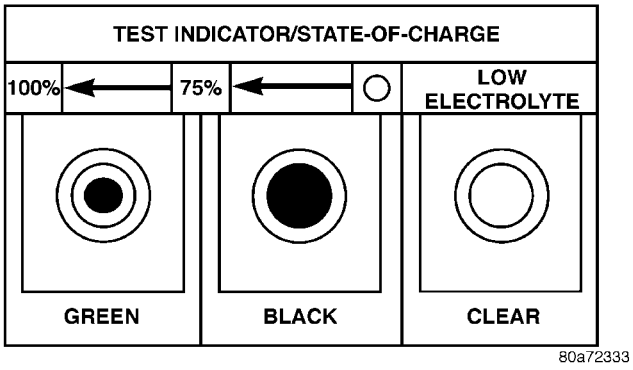

Fig. 8 Built-In Test Indicator Sight Glass

STANDARD PROCEDURE - HYDROMETER TEST

The hydrometer test reveals the battery state-of-charge by measuring the specific gravity of the electrolyte. **This test cannot be performed on maintenance-free batteries with non-removable cell caps.** If the battery has non-removable cell caps,

BATTERY (Continued)

refer to Diagnosis and Testing for alternate methods of determining the battery state-of-charge.

Specific gravity is a comparison of the density of the battery electrolyte to the density of pure water. Pure water has a specific gravity of 1.000, and sulfuric acid has a specific gravity of 1.835. Sulfuric acid makes up approximately 35% of the battery electrolyte by weight, or 24% by volume. In a fully-charged battery the electrolyte will have a temperature-corrected specific gravity of 1.260 to 1.290. However, a specific gravity of 1.235 or above is satisfactory for the battery to be load tested and/or returned to service.

Before testing, visually inspect the battery for any damage (a cracked case or cover, loose posts, etc.) that would cause the battery to be faulty. Then remove the battery cell caps and check the electrolyte level. Add distilled water if the electrolyte level is below the top of the battery plates. Refer to Battery System Cleaning for the proper battery inspection procedures.

See the instructions provided by the manufacturer of the hydrometer for recommendations on the correct use of the hydrometer that you are using. Remove only enough electrolyte from the battery cell so that the float is off the bottom of the hydrometer barrel with pressure on the bulb released. To read the hydrometer correctly, hold it with the top surface of the electrolyte at eye level (Fig. 9).

CAUTION: Exercise care when inserting the tip of the hydrometer into a battery cell to avoid damaging the plate separators. Damaged plate separators can cause early battery failure.

Hydrometer floats are generally calibrated to indicate the specific gravity correctly only at 26.7° C. When testing the specific gravity at any other temperature, a correction factor is required. The correction factor is approximately a specific gravity value of 0.004, which may also be identified as four points of specific gravity. For each 5.5° C above 26.7° C, add four points. For each 5.5° C below 26.7° C, subtract four points. Always correct the specific gravity for temperature variation.

EXAMPLE: A battery is tested at -12.2° C and has a specific gravity of 1.240. Determine the actual specific gravity as follows:

(1) Determine the number of degrees above or below 26.7° C: **26.7° C + -12.2° C = 14.5° C below the 26.7° C specification**

(2) Divide the result from Step 1 by 5.5° C: **14.5° C ÷ 5.5° C = 2.64**

(3) Multiply the result from Step 2 by the temperature correction factor (0.004): **2.64 X 0.004 = 0.01**

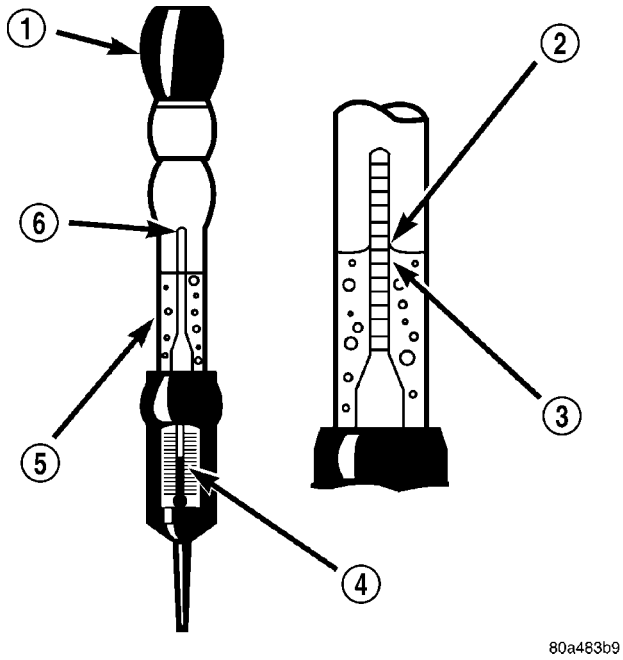

Fig. 9 Hydrometer - Typical

1 - BULB
2 - SURFACE COHESION
3 - SPECIFIC GRAVITY READING
4 - TEMPERATURE READING
5 - HYDROMETER BARREL
6 - FLOAT

(4) The temperature at testing was below 26.7° C; therefore, the temperature correction factor is subtracted: **1.240 - 0.01 = 1.23**

(5) The corrected specific gravity of the battery cell in this example is 1.23.

Test the specific gravity of the electrolyte in each battery cell. If the specific gravity of all cells is above 1.235, but the variation between cells is more than fifty points (0.050), the battery should be replaced. If the specific gravity of one or more cells is less than 1.235, charge the battery at a rate of approximately five amperes. Continue charging the battery until three consecutive specific gravity tests, taken at one-hour intervals, are constant. If the cell specific gravity variation is more than fifty points (0.050) at the end of the charge period, replace the battery.

When the specific gravity of all cells is above 1.235, and the cell variation is less than fifty points (0.050), the battery may be load tested to determine its cranking capacity. Refer to Standard Procedures for the proper battery load test procedures.

STANDARD PROCEDURE - OPEN-CIRCUIT VOLTAGE TEST

A battery open-circuit voltage (no load) test will show the approximate state-of-charge of a battery. This test can be used in place of the hydrometer test

BATTERY (Continued)

when a hydrometer is not available, or for maintenance-free batteries with non-removable cell caps.

Before proceeding with this test, completely charge the battery (Refer to 8 - ELECTRICAL/BATTERY SYSTEM/BATTERY - STANDARD PROCEDURE).

(1) Before measuring the open-circuit voltage, the surface charge must be removed from the battery. Turn on the headlamps for fifteen seconds, then allow up to five minutes for the battery voltage to stabilize.

(2) Disconnect and isolate both battery cables, negative cable first.

(3) Using a voltmeter connected to the battery posts (see the instructions provided by the manufacturer of the voltmeter), measure the open-circuit voltage (Fig. 10).

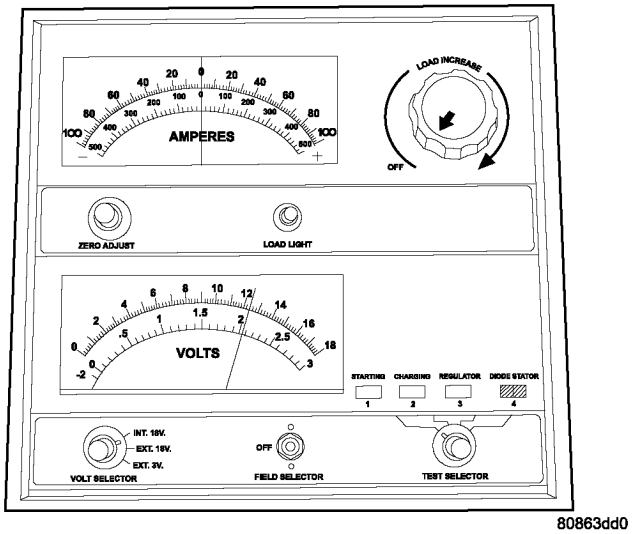

Fig. 10 Testing Open Circuit Voltage

See the Open-Circuit Voltage Table. This voltage reading will indicate the battery state-of-charge, but will not reveal its cranking capacity. If a battery has an open-circuit voltage reading of 12.4 volts or greater, it may be load tested to reveal its cranking capacity (Refer to 8 - ELECTRICAL/BATTERY SYSTEM/BATTERY - STANDARD PROCEDURE).

OPEN CIRCUIT VOLTAGE TABLE	
Open Circuit Voltage	Charge Percentage
11.7 volts or less	0%
12.0 volts	25%
12.2 volts	50%
12.4 volts	75%
12.6 volts or more	100%

STANDARD PROCEDURE - IGNITION-OFF DRAW TEST

The term Ignition-Off Draw (IOD) identifies a normal condition where power is being drained from the battery with the ignition switch in the Off position. A normal vehicle electrical system will draw from five to thirty-five milliamperes (0.005 to 0.035 ampere) with the ignition switch in the Off position, and all non-ignition controlled circuits in proper working order. Up to thirty-five milliamperes are needed to enable the memory functions for the Powertrain Control Module (PCM), digital clock, electronically tuned radio, and other modules which may vary with the vehicle equipment.

A vehicle that has not been operated for approximately twenty days, may discharge the battery to an inadequate level. When a vehicle will not be used for twenty days or more (stored), remove the IOD fuse from the Power Distribution Center (PDC). This will reduce battery discharging.

Excessive IOD can be caused by:

- Electrical items left on.
- Faulty or improperly adjusted switches.
- Faulty or shorted electronic modules and components.
- An internally shorted generator.
- Intermittent shorts in the wiring.

If the IOD is over thirty-five milliamperes, the problem must be found and corrected before replacing a battery. In most cases, the battery can be charged and returned to service after the excessive IOD condition has been corrected.

(1) Verify that all electrical accessories are off. Turn off all lamps, remove the ignition key, and close all doors. If the vehicle is equipped with an illuminated entry system or an electronically tuned radio, allow the electronic timer function of these systems to automatically shut off (time out). This may take up to three minutes. See the Electronic Module Ignition-Off Draw Table for more information.

BATTERY (Continued)

ELECTRONIC MODULE IGNITION-OFF DRAW (IOD) TABLE			
Module	Time Out? (If Yes, Interval And Wake-Up Input)	IOD	IOD After Time Out
Radio	No	1 to 3 milliamperes	N/A
Audio Power Amplifier	No	up to 1 milliampere	N/A
Body Control Module (BCM)	No	4.75 milliamperes (max.)	N/A
Powertrain Control Module (PCM)	No	0.95 milliampere	N/A
ElectroMechanical Instrument Cluster (EMIC)	No	0.44 milliampere	N/A
Combination Flasher	No	0.08 milliampere	N/A
Automatic Transmission Controller (EATX)	Yes, 20 minutes	120 milliampere	0.70 ma

(2) Determine that the underhood lamp is operating properly, then disconnect the lamp wire harness connector or remove the lamp bulb.

(3) Disconnect the battery negative cable.

(4) Set an electronic digital multi-meter to its highest amperage scale. Connect the multi-meter between the disconnected battery negative cable terminal clamp and the battery negative terminal post. Make sure that the doors remain closed so that the illuminated entry system is not activated. The multi-meter amperage reading may remain high for up to three minutes, or may not give any reading at all while set in the highest amperage scale, depending upon the electrical equipment in the vehicle. The multi-meter leads must be securely clamped to the battery negative cable terminal clamp and the battery negative terminal post. If continuity between the battery negative terminal post and the negative cable terminal clamp is lost during any part of the IOD test, the electronic timer function will be activated and all of the tests will have to be repeated.

(5) After about three minutes, the high-amperage IOD reading on the multi-meter should become very low or nonexistent, depending upon the electrical equipment in the vehicle. If the amperage reading remains high, remove and replace each fuse or circuit breaker in the Power Distribution Center (PDC) and then in the Junction Block (JB), one at a time until the amperage reading becomes very low, or nonexistent. Refer to the appropriate wiring information in this service manual for complete PDC and JB fuse, circuit breaker, and circuit identification. This will isolate each circuit and identify the circuit that is the source of the high-amperage IOD. If the amperage reading remains high after removing and replacing each fuse and circuit breaker, disconnect the wire harness from the generator. If the amperage reading now becomes very low or nonexistent, refer to Charging System for the proper charging system diagnosis and testing procedures. After the high-amperage IOD has been corrected, switch the multi-meter to progressively lower amperage scales and, if necessary, repeat the fuse and circuit breaker remove-and-replace process to identify and correct all sources of excessive IOD. It is now safe to select the lowest milliampere scale of the multi-meter to check the low-amperage IOD.

CAUTION: Do not open any doors, or turn on any electrical accessories with the lowest milliampere scale selected, or the multi-meter may be damaged.

(6) Observe the multi-meter reading. The low-amperage IOD should not exceed thirty-five milliamperes (0.035 ampere). If the current draw exceeds thirty-five milliamperes, isolate each circuit using the fuse and circuit breaker remove-and-replace process in Step 5. The multi-meter reading will drop to within the acceptable limit when the source of the excessive current draw is disconnected. Repair this circuit as required; whether a wiring short, incorrect switch adjustment, or a component failure is at fault.

BATTERY (Continued)

STANDARD PROCEDURE - USING MICRO 420 BATTERY TESTER

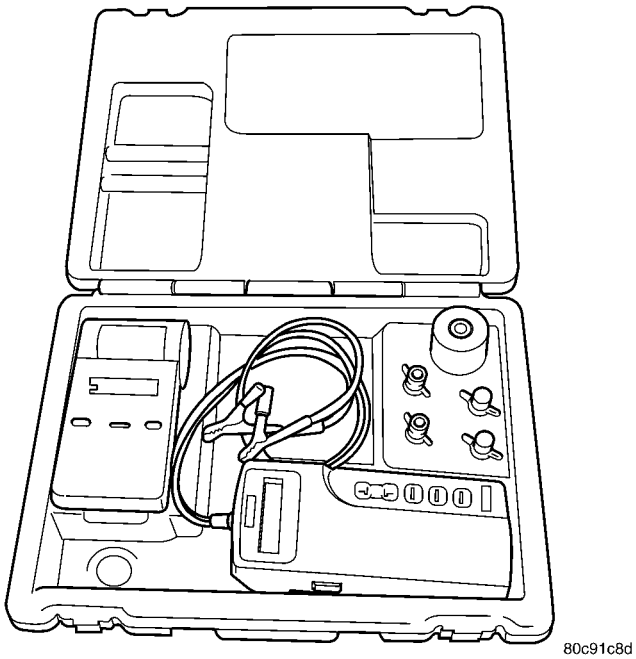

Fig. 11 Micro 420 Battery Tester

Always use the Micro 420 instruction manual that was supplied with the tester as a reference. If the Instruction Manual is not available the following procedure can be used:

WARNING: ALWAYS WEAR APPROPRIATE EYE PROTECTION AND USE EXTREME CAUTION WHEN WORKING WITH BATTERIES.

BATTERY TESTING

(1) If testing the battery OUT-OF-VEHICLE, clean the battery terminals with a wire brush before testing. If the battery is equipped with side post terminals, install and tighten the supplied lead terminal stud adapters. Do not use steel bolts. Failure to properly install the stud adapters, or using stud adapters that are dirty or worn-out may result in false test readings.

(2) If testing the battery IN-THE-VEHICLE, make certain all of the vehicle accessory loads are OFF, including the ignition. **The preferred test position is at the battery terminal**. If the battery is not accessible, you may test using both the positive and negative jumper posts. Select TESTING AT JUMPER POST when connecting to that location.

(3) Connect the tester (Fig. 11) to the battery or jumper posts, the red clamp to positive (+) and the black clamp to negative (–).

(4) Using the ARROW key select **in** or **out** of vehicle testing and press ENTER to make a selection.

(5) If not selected, choose the Cold Cranking Amp (CCA) battery rating. Or select the appropriate battery rating for your area (see menu). The tester will then run its self programmed test of the battery and display the results. Refer to the test result table noted below.

CAUTION: If REPLACE BATTERY is the result of the test, this may mean a poor connection between the vehicle's cables and battery exists. After disconnecting the vehicle's battery cables from the battery, retest the battery using the OUT-OF-VEHICLE test before replacing.

(6) While viewing the battery test result, press the CODE button and the tester will prompt you for the last 4 digits of the VIN. Use the UP/DOWN arrow buttons to scroll to the correct character; then press ENTER to select and move to the next digit. Then press the ENTER button to view the SERVICE CODE. Pressing the CODE button a second time will return you to the test results.

BATTERY TEST RESULTS	
GOOD BATTERY	Return to service
GOOD - RECHARGE	Fully charge battery and return to service
CHARGE & RETEST	Fully charge battery and retest battery
REPLACE BATTERY	Replace the battery and retest complete system
BAD-CELL REPLACE	Replace the battery and retest complete system

NOTE: The SERVICE CODE is required on every warranty claim submitted for battery replacement.

BATTERY (Continued)

REMOVAL

(1) Turn the ignition switch to the Off position. Be certain that all electrical accessories are turned off.

(2) Loosen the battery negative cable terminal clamp pinch-bolt hex nut.

(3) Disconnect the battery negative cable terminal clamp from the battery negative terminal post. If necessary, use a battery terminal puller to remove the terminal clamp from the battery post (Fig. 12).

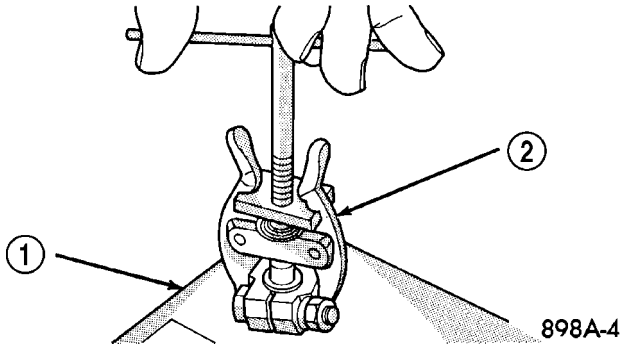

Fig. 12 Remove Battery Cable Terminal Clamp - Typical

1 - BATTERY
2 - BATTERY TERMINAL PULLER

(4) Loosen the battery positive cable terminal clamp pinch-bolt hex nut.

(5) Disconnect the battery positive cable terminal clamp from the battery positive terminal post. If necessary, use a battery terminal puller to remove the terminal clamp from the battery post.

(6) Remove the battery holddowns from the battery. Refer to Battery Holddown for the proper battery holddown removal procedures.

WARNING: WEAR A SUITABLE PAIR OF RUBBER GLOVES (NOT THE HOUSEHOLD TYPE) WHEN REMOVING A BATTERY BY HAND. SAFETY GLASSES SHOULD ALSO BE WORN. IF THE BATTERY IS CRACKED OR LEAKING, THE ELECTROLYTE CAN BURN THE SKIN AND EYES.

(7) Remove the battery and the battery thermal guard from the battery tray as a unit.

(8) Remove the battery thermal guard from the battery case. Refer to Thermal Guard for the proper battery thermal guard removal procedures.

INSTALLATION

(1) Clean and inspect all of the battery system components. Refer to Battery System Cleaning for the proper cleaning procedures, and refer to Battery System Inspection for the proper inspection procedures.

(2) Reinstall the battery thermal guard onto the battery case. Refer to Thermal Guard for the proper battery thermal guard installation procedures.

(3) Position the battery and the battery thermal guard onto the battery tray as a unit. Ensure that the battery positive and negative terminal posts are correctly positioned. The battery cable terminal clamps must reach the correct battery terminal post without stretching the cables (Fig. 13).

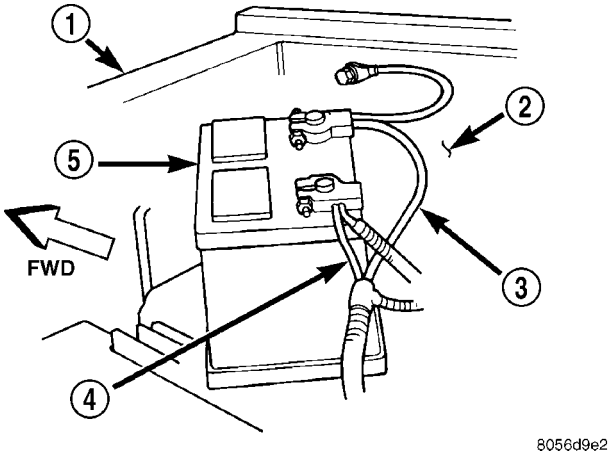

Fig. 13 Battery Cables - Typical

1 - RADIATOR CROSSMEMBER
2 - WHEELHOUSE INNER PANEL
3 - NEGATIVE CABLE
4 - POSITIVE CABLE
5 - BATTERY

(4) Reinstall the battery holddowns onto the battery. Refer to Battery Holddown for the proper installation procedure.

CAUTION: Be certain that the battery cable terminal clamps are connected to the correct battery terminal posts. Reversed battery polarity may damage electrical components of the vehicle.

(5) Clean the battery cable terminal clamps and the battery terminal posts. Refer to Battery System Cleaning for cleaning procedure.

(6) Reconnect the battery positive cable terminal clamp to the battery positive terminal post. Tighten the terminal clamp pinch-bolt hex nut to 75 in. lbs.

(7) Reconnect the battery negative cable terminal clamp to the battery negative terminal post. Tighten the terminal clamp pinch-bolt hex nut to 75 in. lbs.

(8) Apply a thin coating of petroleum jelly or chassis grease to the exposed surfaces of the battery cable terminal clamps and the battery terminal posts.

BATTERY HOLDDOWN

DESCRIPTION

The battery holddown hardware includes a plastic holddown bracket and retaining bolt. The battery holddown bracket meshes with the battery tray to secure the battery to the battery tray.

When installing a battery into the battery tray, it is important that the holddown hardware is properly installed and that the fastener is tightened to the proper specifications. Improper holddown fastener tightness, whether too loose or too tight, can result in damage to the battery, the vehicle, or both. Refer to Battery Holddown for the proper installation procedure, including the proper holddown fastener torque specifications.

OPERATION

The battery holddown secures the battery in the battery tray. This holddown is designed to prevent battery movement during the most extreme vehicle operation conditions. Periodic removal and lubrication of the battery holddown hardware is recommended to prevent hardware seizure at a later date.

CAUTION: Never operate a vehicle without a battery holddown device properly installed. Damage to the vehicle, components and battery could result.

REMOVAL

(1) Turn the ignition switch to the Off position. Be certain that all electrical accessories are turned off.

(2) Loosen the battery negative cable terminal clamp pinch-bolt hex nut.

(3) Disconnect the battery negative cable terminal clamp from the battery negative terminal post. If necessary, use a battery terminal puller to remove the terminal clamp from the battery post.

(4) Remove the battery hold down bracket retaining bolt from the threaded insert in the battery tray assembly.

INSTALLATION

(1) Clean and inspect the battery hold down hardware. Refer to Battery Cleaning for the proper battery system component cleaning procedures, and Battery Inspection for the proper battery system component inspection procedures.

(2) Position the battery hold down bracket onto the battery tray.

(3) Install and tighten the battery hold down bracket retaining bolt. Tighten the bolt to 4 N·m (35 in. lbs.).

(4) Reconnect the battery negative cable terminal clamp to the battery negative terminal post. Tighten the terminal clamp pinch-bolt hex nut to 8.4 N·m (75 in. lbs.).

BATTERY CABLES

DESCRIPTION

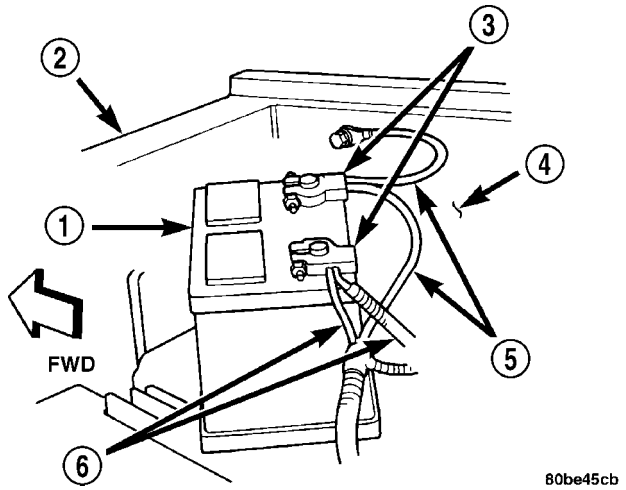

Fig. 14 Battery Cables - Typical

1 - BATTERY
2 - RADIATOR CROSSMEMBER
3 - TERMINAL CLAMPS
4 - FENDER INNER SHIELD
5 - NEGATIVE CABLE
6 - POSITIVE CABLE

The battery cables (Fig. 14) are large gauge, stranded copper wires sheathed within a heavy plastic or synthetic rubber insulating jacket. The wire used in the battery cables combines excellent flexibility and reliability with high electrical current carrying capacity. The battery cables feature a clamping type female battery terminal made of soft lead that is die cast onto one end of the battery cable wire. A square headed pinch-bolt and hex nut are installed at the open end of the female battery terminal clamp. Large eyelet type terminals are crimped onto the opposite end of the battery cable wire and then solder-dipped. The battery positive cable wires have a red insulating jacket to provide visual identification and feature a larger female battery terminal clamp to allow connection to the larger battery positive terminal post. The battery negative cable wires have a black insulating jacket and a smaller female battery terminal clamp.

The battery cables cannot be repaired and, if damaged or faulty they must be replaced. Both the battery positive and negative cables are available for service replacement only as a unit with the battery wire harness, which may include portions of the wiring circuits for the generator and other components on some models. Refer to the appropriate wiring information in this service manual for the location of the proper battery cable wire harness diagrams. The wiring information also includes proper wire and connector repair procedures, further details on wire har-

BATTERY CABLES (Continued)

ness routing and retention, as well as pin-out and location views for the various wire harness connectors, splices and grounds.

OPERATION

The battery cables connect the battery terminal posts to the vehicle electrical system. These cables also provide a path back to the battery for electrical current generated by the charging system for restoring the voltage potential of the battery. The female battery terminal clamps on the ends of the battery cable wires provide a strong and reliable connection of the battery cable to the battery terminal posts. The terminal pinch bolts allow the female terminal clamps to be tightened around the male terminal posts on the top of the battery. The eyelet terminals secured to the opposite ends of the battery cable wires from the female battery terminal clamps provide secure and reliable connection of the battery cables to the vehicle electrical system.

The battery positive cable terminal clamp is die cast onto the ends of two wires. One wire has an eyelet terminal that connects the battery positive cable to the B(+) terminal studs of the Power Distribution Center (PDC), and the other wire has an eyelet terminal that connects the battery positive cable to the B(+) terminal stud of the engine starter motor solenoid. The battery negative cable terminal clamp is also die cast onto the ends of two wires. One wire has an eyelet terminal that connects the battery negative cable to the vehicle powertrain through a stud on the left side of the engine cylinder block. The other wire has an eyelet terminal that connects the battery negative cable to the vehicle body through a ground stud on the left wheel house, near the battery.

DIAGNOSIS AND TESTING - BATTERY CABLES

A voltage drop test will determine if there is excessive resistance in the battery cable terminal connections or the battery cable. If excessive resistance is found in the battery cable connections, the connection point should be disassembled, cleaned of all corrosion or foreign material, then reassembled. Following reassembly, check the voltage drop for the battery cable connection and the battery cable again to confirm repair.

When performing the voltage drop test, it is important to remember that the voltage drop is giving an indication of the resistance between the two points at which the voltmeter probes are attached. **EXAMPLE:** When testing the resistance of the battery positive cable, touch the voltmeter leads to the battery positive cable terminal clamp and to the battery positive cable eyelet terminal at the starter solenoid B(+) terminal stud. If you probe the battery positive terminal post and the battery positive cable eyelet terminal at the starter solenoid B(+) terminal stud, you are reading the combined voltage drop in the battery positive cable terminal clamp-to-terminal post connection and the battery positive cable.

VOLTAGE DROP TEST

The following operation will require a voltmeter accurate to 1/10 (0.10) volt. Before performing this test, be certain that the following procedures are accomplished:

- The battery is fully-charged and load tested. Refer to Standard Procedures for the proper battery charging and load test procedures.
- Fully engage the parking brake.
- If the vehicle is equipped with an automatic transmission, place the gearshift selector lever in the Park position. If the vehicle is equipped with a manual transmission, place the gearshift selector lever in the Neutral position and block the clutch pedal in the fully depressed position.
- Verify that all lamps and accessories are turned off.
- To prevent the engine from starting, remove the Automatic Shut Down (ASD) relay. The ASD relay is located in the Power Distribution Center (PDC), in the engine compartment. See the fuse and relay layout label affixed to the underside of the PDC cover for ASD relay identification and location.

(1) Connect the positive lead of the voltmeter to the battery negative terminal post. Connect the negative lead of the voltmeter to the battery negative cable terminal clamp (Fig. 15). Rotate and hold the ignition switch in the Start position. Observe the voltmeter. If voltage is detected, correct the poor connection between the battery negative cable terminal clamp and the battery negative terminal post.

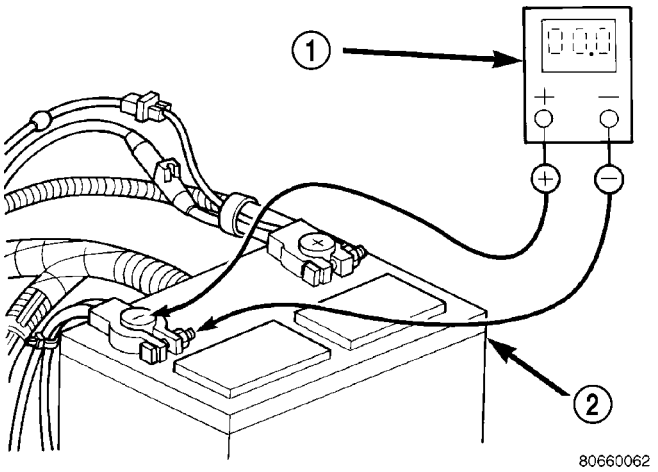

Fig. 15 Test Battery Negative Connection Resistance - Typical

1 - VOLTMETER
2 - BATTERY

BATTERY CABLES (Continued)

(2) Connect the positive lead of the voltmeter to the battery positive terminal post. Connect the negative lead of the voltmeter to the battery positive cable terminal clamp (Fig. 16). Rotate and hold the ignition switch in the Start position. Observe the voltmeter. If voltage is detected, correct the poor connection between the battery positive cable terminal clamp and the battery positive terminal post.

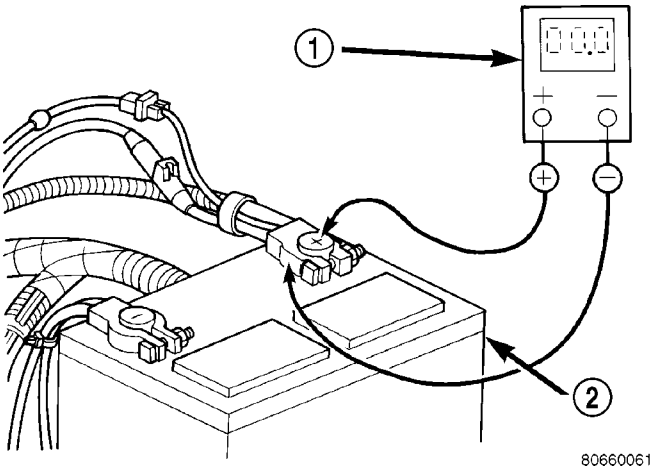

Fig. 16 Test Battery Positive Connection Resistance - Typical

1 - VOLTMETER
2 - BATTERY

(3) Connect the voltmeter to measure between the battery positive cable terminal clamp and the starter solenoid B(+) terminal stud (Fig. 17). Rotate and hold the ignition switch in the Start position. Observe the voltmeter. If the reading is above 0.2 volt, clean and tighten the battery positive cable eyelet terminal connection at the starter solenoid B(+) terminal stud. Repeat the test. If the reading is still above 0.2 volt, replace the faulty battery positive cable.

(4) Connect the voltmeter to measure between the battery negative cable terminal clamp and a good clean ground on the engine block (Fig. 18). Rotate and hold the ignition switch in the Start position. Observe the voltmeter. If the reading is above 0.2 volt, clean and tighten the battery negative cable eyelet terminal connection to the engine block. Repeat the test. If the reading is still above 0.2 volt, replace the faulty battery negative cable.

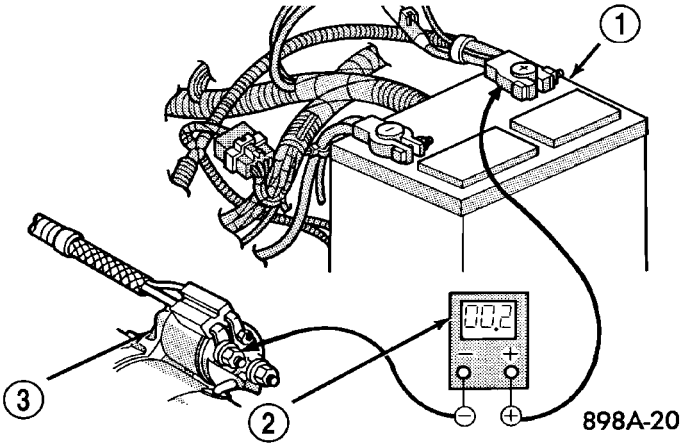

Fig. 17 Test Battery Positive Cable Resistance - Typical

1 - BATTERY
2 - VOLTMETER
3 - STARTER MOTOR

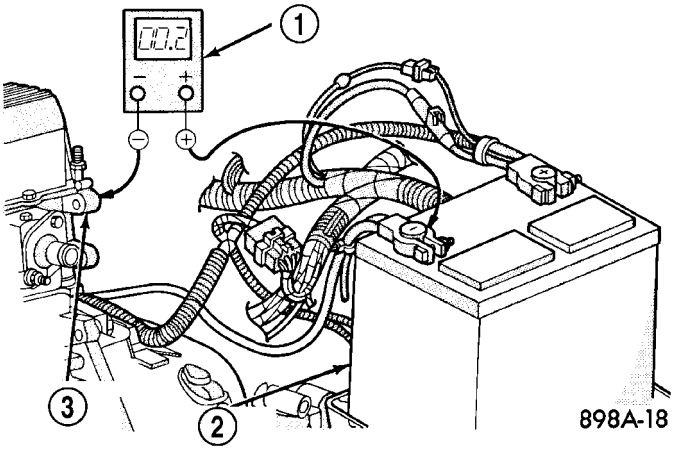

Fig. 18 Test Ground Circuit Resistance - Typical

1 - VOLTMETER
2 - BATTERY
3 - ENGINE GROUND

BATTERY TRAY

DESCRIPTION

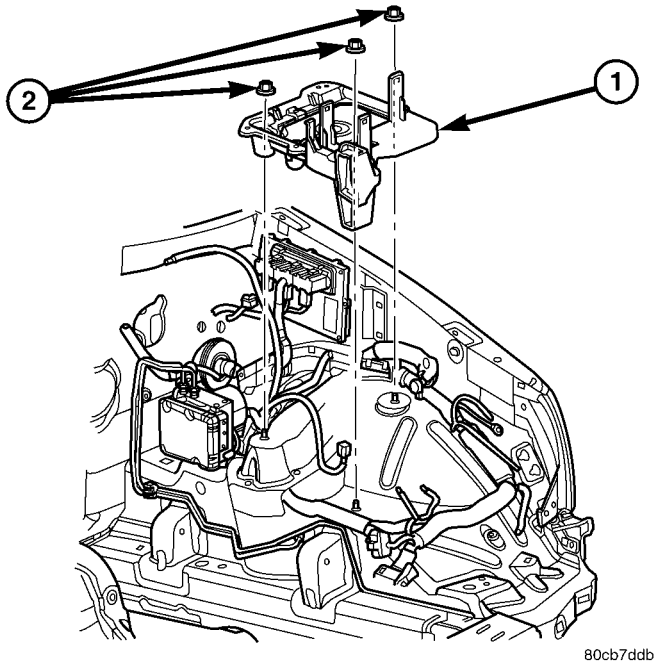

Fig. 19 Battery Tray Location

1 - BATTERY TRAY
2 - BATTERY TRAY RETAINING NUTS

The battery is placed in a molded plastic tray located in the left front corner of the engine compartment (Fig. 19). The battery hold down hardware is contained within the battery tray. Refer to Battery Hold down for more information on hold down hardware.

OPERATION

The battery tray provides a secure mounting location and supports the battery. On some vehicles, the battery tray also provides the anchor point/s for the battery holddown hardware. The battery tray and the battery holddown hardware combine to secure and stabilize the battery in the engine compartment, which prevents battery movement during vehicle operation. Unrestrained battery movement during vehicle operation could result in damage to the vehicle, the battery, or both.

REMOVAL

(1) Remove the battery from the battery tray (Refer to 8 - ELECTRICAL/BATTERY SYSTEM/BATTERY - REMOVAL).

(2) Unlatch and remove the PDC from the battery tray.

(3) Remove the three nuts that secure the battery tray to the weld studs on the front extension of the left front wheelhouse inner panel (Fig. 19).

(4) Remove the battery tray from the vehicle.

INSTALLATION

(1) Clean and inspect the battery tray. (Refer to 8 - ELECTRICAL/BATTERY SYSTEM - CLEANING).

(2) Position the battery tray onto the weld studs on the front extension of the left front wheelhouse inner panel.

(3) Install and tighten the three nuts that secure the battery tray to the weld studs on the front extension of the left front wheelhouse inner panel. Tighten the nuts to 7 N·m (65 in. lbs.).

(4) Install the PDC on the battery tray.

(5) Install the battery onto the battery tray. (Refer to 8 - ELECTRICAL/BATTERY SYSTEM/BATTERY - INSTALLATION).

CHARGING SYSTEM

TABLE OF CONTENTS

page

CHARGING SYSTEM
DESCRIPTION 22
OPERATION 22
DIAGNOSIS AND TESTING - CHARGING SYSTEM 22
SPECIFICATIONS
TORQUE - EXCEPT DIESEL 23
GENERATOR RATINGS - GAS ENGINES . . . 23
SPECIAL TOOLS 24
BATTERY TEMPERATURE SENSOR
DESCRIPTION 24
OPERATION 24
REMOVAL 24
INSTALLATION 24
GENERATOR
DESCRIPTION 25
OPERATION 25
REMOVAL 25
INSTALLATION 26
GENERATOR DECOUPLER PULLEY
DESCRIPTION 26
OPERATION 27
DIAGNOSIS AND TESTING - GENERATOR DECOUPLER 27
REMOVAL 27
INSTALLATION 30
VOLTAGE REGULATOR
DESCRIPTION 31
OPERATION 31

CHARGING SYSTEM

DESCRIPTION

The charging system consists of:

- Generator
- Electronic Voltage Regulator (EVR) circuitry within the Powertrain Control Module (PCM)
- Ignition switch
- Battery (refer to 8, Battery for information)
- Battery temperature sensor
- Generator Lamp (if equipped)
- Check Gauges Lamp (if equipped)
- Wiring harness and connections (refer to 8, Wiring for information)

OPERATION

The charging system is turned on and off with the ignition switch. The system is on when the engine is running and the ASD relay is energized. When the ASD relay is on, voltage is supplied to the ASD relay sense circuit at the PCM. This voltage is connected through the PCM and supplied to one of the generator field terminals (Gen. Source +) at the back of the generator.

The amount of DC current produced by the generator is controlled by the EVR (field control) circuitry contained within the PCM. This circuitry is connected in series with the second rotor field terminal and ground.

A battery temperature sensor, located in the battery tray housing, is used to sense battery temperature. This temperature data, along with data from monitored line voltage, is used by the PCM to vary the battery charging rate. This is done by cycling the ground path to control the strength of the rotor magnetic field. The PCM then compensates and regulates generator current output accordingly.

All vehicles are equipped with On-Board Diagnostics (OBD). All OBD-sensed systems, including EVR (field control) circuitry, are monitored by the PCM. Each monitored circuit is assigned a Diagnostic Trouble Code (DTC). The PCM will store a DTC in electronic memory for certain failures it detects. Refer to Diagnostic Trouble Codes in; Powertrain Control Module; Electronic Control Modules for more DTC information.

The Check Gauges Lamp (if equipped) monitors: **charging system voltage,** engine coolant temperature and engine oil pressure. If an extreme condition is indicated, the lamp will be illuminated. This is done as reminder to check the three gauges. The signal to activate the lamp is sent via the CCD bus circuits. The lamp is located on the instrument panel. Refer to 8, Instrument Cluster for additional information.

DIAGNOSIS AND TESTING - CHARGING SYSTEM

The following procedures may be used to diagnose the charging system if:

- the check gauges lamp (if equipped) is illuminated with the engine running

CHARGING SYSTEM (Continued)

• the voltmeter (if equipped) does not register properly

• an undercharged or overcharged battery condition occurs.

Remember that an undercharged battery is often caused by:

• accessories being left on with the engine not running

• a faulty or improperly adjusted switch that allows a lamp to stay on. Refer to Ignition-Off Draw Test in 8, Battery for more information.

INSPECTION

The Powertrain Control Module (PCM) monitors critical input and output circuits of the charging system, making sure they are operational. A Diagnostic Trouble Code (DTC) is assigned to each input and output circuit monitored by the On-Board Diagnostic (OBD) system. Some charging system circuits are checked continuously, and some are checked only under certain conditions.

Refer to Diagnostic Trouble Codes in; Powertrain Control Module; Electronic Control Modules for more DTC information. This will include a complete list of DTC's including DTC's for the charging system.

To perform a complete test of the charging system, refer to the appropriate Powertrain Diagnostic Procedures service manual and the DRB® scan tool. Perform the following inspections before attaching the scan tool.

(1) Inspect the battery condition. Refer to 8, Battery for procedures.

(2) Inspect condition of battery cable terminals, battery posts, connections at engine block, starter solenoid and relay. They should be clean and tight. Repair as required.

(3) Inspect all fuses in both the fuseblock and Power Distribution Center (PDC) for tightness in receptacles. They should be properly installed and tight. Repair or replace as required.

(4) Inspect generator mounting bolts for tightness. Replace or tighten bolts if required. Refer to the Generator Removal/Installation section of this group for torque specifications.

(5) Inspect generator drive belt condition and tension. Tighten or replace belt as required. Refer to Belt Tension Specifications in 7, Cooling System.

(6) Inspect automatic belt tensioner (if equipped). Refer to 7, Cooling System for information.

(7) Inspect generator electrical connections at generator field, battery output, and ground terminal (if equipped). Also check generator ground wire connection at engine (if equipped). They should all be clean and tight. Repair as required.

SPECIFICATIONS

TORQUE - EXCEPT DIESEL

DESCRIPTION	N-m	Ft. Lbs.	In. Lbs.
Generator Horizontal Mounting Bolts - 3.7L	57	42	-
Generator Vertical Mounting Bolt - 3.7L	40	29	-
Generator Mounting Bolts - 2.4L	57	42	-
B+ Terminal Nut at Top of Generator	13	-	115
Generator Decoupler	110	81	-

GENERATOR RATINGS - GAS ENGINES

TYPE	PART NUMBER	RATED SAE AMPS	ENGINES	MINIMUM TEST AMPS
DENSO	56044530AB	124	2.4L	88
DENSO	56044532AB	136	2.4L	96
DENSO	56041693AA	136	3.7L	96
DENSO	56029914AA	160	3.7L	112

CHARGING SYSTEM (Continued)

SPECIAL TOOLS

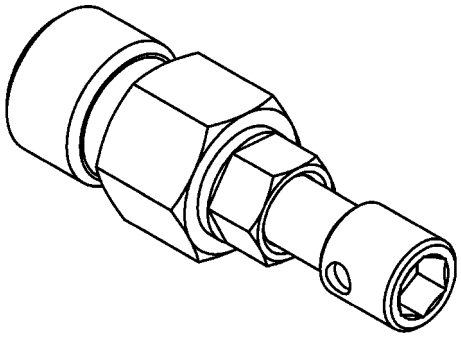

GENERATOR DECOUPLER TOOL #8433

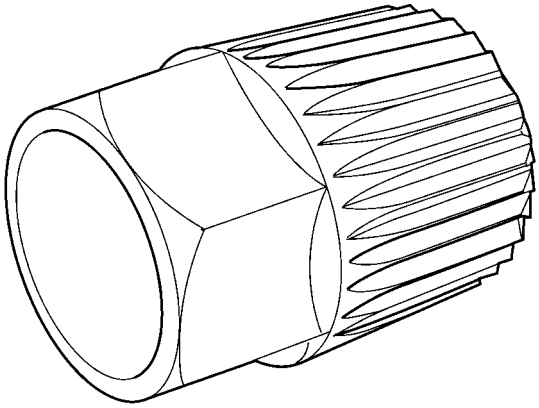

80cb8152

GENERATOR DECOUPLER TOOL #8823

BATTERY TEMPERATURE SENSOR

DESCRIPTION

The Battery Temperature Sensor (BTS) is attached to the battery tray located under the battery.

OPERATION

The BTS is used to determine the battery temperature and control battery charging rate. This temperature data, along with data from monitored line voltage, is used by the PCM to vary the battery charging rate. System voltage will be higher at colder temperatures and is gradually reduced at warmer temperatures.

The PCM sends 5 volts to the sensor and is grounded through the sensor return line. As temperature increases, resistance in the sensor decreases and the detection voltage at the PCM increases.

The BTS is also used for OBD II diagnostics. Certain faults and OBD II monitors are either enabled or disabled, depending upon BTS input (for example, disable purge and enable Leak Detection Pump (LDP) and O2 sensor heater tests). Most OBD II monitors are disabled below 20 degrees F.

REMOVAL

The battery temperature sensor is located under the vehicle battery (Fig. 1) and is attached to a mounting hole on battery tray.

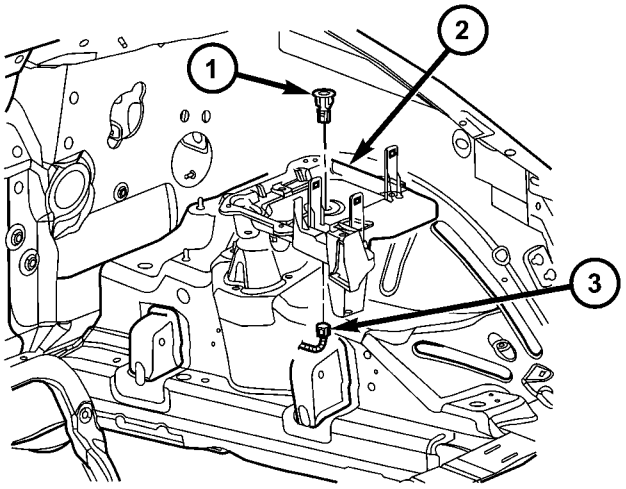

80c7eb91

Fig. 1 BATTERY TEMPERATURE SENSOR

1 - BATTERY TEMPERATURE SENSOR
2 - BATTERY TRAY
3 - ELECTRICAL CONNECTOR

(1) Remove battery. Refer to 8, Battery for procedures.

(2) Disconnect sensor pigtail harness from engine wire harness electrical connector.

(3) Pry sensor straight up from battery tray mounting hole.

INSTALLATION

The battery temperature sensor is located under vehicle battery and is attached to a mounting hole on battery tray.

(1) Feed pigtail harness through hole in top of battery tray and press sensor into top of battery tray.

(2) Connect pigtail harness.

(3) Install battery. Refer to 8, Battery for procedures.

GENERATOR

DESCRIPTION

The generator is belt-driven by the engine using a serpentine type drive belt. It is serviced only as a complete assembly. If the generator fails for any reason, the entire assembly must be replaced.

OPERATION

As the energized rotor begins to rotate within the generator, the spinning magnetic field induces a current into the windings of the stator coil. Once the generator begins producing sufficient current, it also provides the current needed to energize the rotor.

The stator winding connections deliver the induced AC current to 3 positive and 3 negative diodes for rectification. From the diodes, rectified DC current is delivered to the vehicle electrical system through the generator battery terminal.

Although the generators appear the same externally, different generators with different output ratings are used on this vehicle. Be certain that the replacement generator has the same output rating and part number as the original unit. Refer to Specifications and see Generator Ratings for amperage ratings and part numbers.

Noise emitting from the generator may be caused by: worn, loose or defective bearings; a loose or defective drive pulley; incorrect, worn, damaged or misadjusted fan drive belt; loose mounting bolts; a misaligned drive pulley or a defective stator or diode.

REMOVAL

Gasoline Powered Engines

CAUTION: DISCONNECT NEGATIVE CABLE FROM BATTERY BEFORE REMOVING BATTERY OUTPUT WIRE FROM GENERATOR. FAILURE TO DO SO CAN RESULT IN INJURY.

(1) Disconnect and isolate negative battery cable at battery.

CAUTION: Never force a belt over a pulley rim using a screwdriver. The synthetic fiber of the belt can be damaged.

CAUTION: When installing a serpentine accessory drive belt, the belt MUST be routed correctly. The water pump will be rotating in the wrong direction if the belt is installed incorrectly, causing the engine to overheat. Refer to belt routing label in engine compartment, or refer to Belt Schematics in Cooling System.

(2) Remove generator drive belt. Refer to 7, Cooling System for procedures.

(3) Unsnap plastic protective cover (Fig. 2) from B+ mounting stud.

(4) Remove B+ terminal mounting nut (Fig. 2) at top of generator.

(5) Disconnect field wire electrical connector at rear of generator (Fig. 2) by pushing on connector tab.

(6) 2.4L Engine: Remove 2 generator mounting bolts (Fig. 3).

(7) 3.7L Engine: Remove 1 vertical generator mounting bolt and 2 horizontal mounting bolts (Fig. 4).

(8) Remove generator from vehicle.

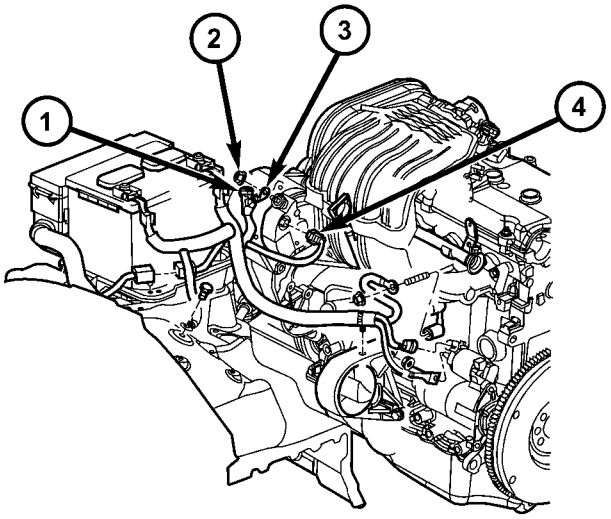

Fig. 2 GENERATOR ELECTRICAL CONNECTORS - TYPICAL

1 - PROTECTIVE CAP
2 - B+ NUT
3 - B+ TERMINAL
4 - FIELD ELECTRICAL CONNECTOR

GENERATOR (Continued)

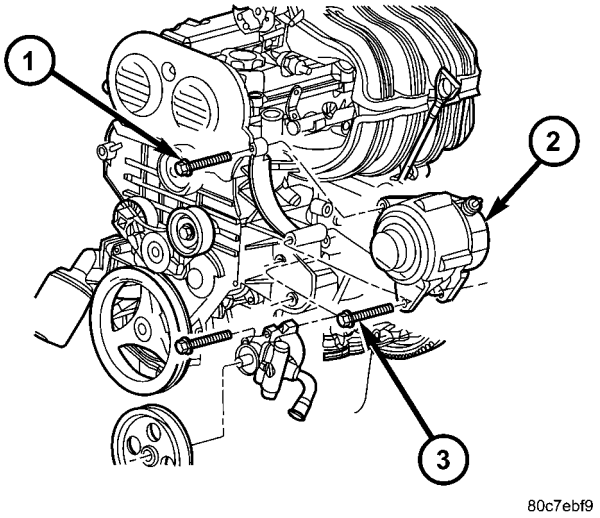

Fig. 3 GENERATOR - 2.4L

1 - UPPER MOUNTING BOLT
2 - GENERTOR
3 - LOWER MOUNTING BOLT

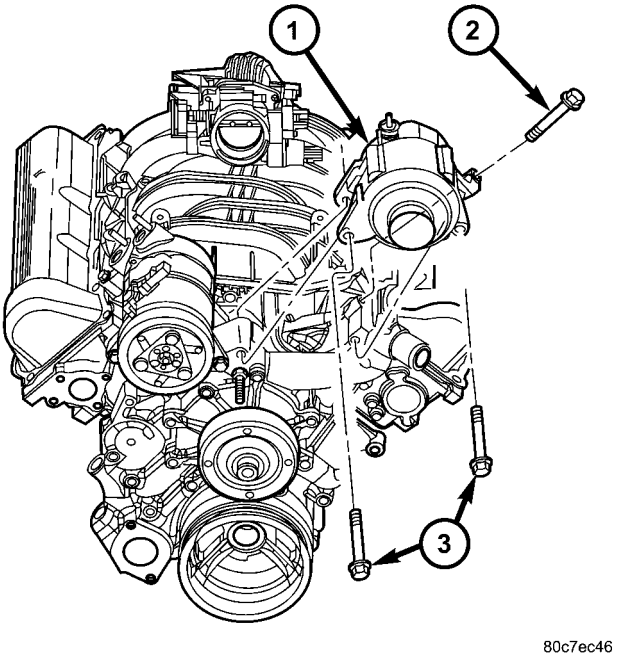

Fig. 4 GENERATOR - 3.7L

1 - GENERATOR
2 - VERTICAL MOUNTING BOLT
3 - HORIZONTAL MOUNTING BOLTS

INSTALLATION

Gasoline Powered Engines

(1) 2.4L Engine: Position generator to engine and install 2 mounting bolts. Refer to torque specifications.

(2) 3.7L Engine: Position generator to engine and install 3 mounting bolts. Tighten 2 horizontal mounting bolts to specified torque. Tighten 1 verticle mounting bolt to specified torque. Refer to torque specifications.

(3) Snap field wire connector into rear of generator.

(4) Install B+ terminal and nut to generator mounting stud. Refer to torque specifications.

(5) Snap plastic protective cover to B+ terminal.

CAUTION: Never force a belt over a pulley rim using a screwdriver. The synthetic fiber of the belt can be damaged.

CAUTION: When installing a serpentine accessory drive belt, the belt MUST be routed correctly. The water pump will be rotating in the wrong direction if the belt is installed incorrectly, causing the engine to overheat. Refer to belt routing label in engine compartment, or refer to Belt Schematics in 7, Cooling System.

(6) Install drive belt Refer to 7, Cooling System for belt routing, belt adjustment and bolt tightening procedures.

(7) Install negative battery cable to battery.

GENERATOR DECOUPLER PULLEY

DESCRIPTION

The generator decoupler is used only with certain engines. The decoupler is used in place of the standard generator drive pulley (Fig. 5).

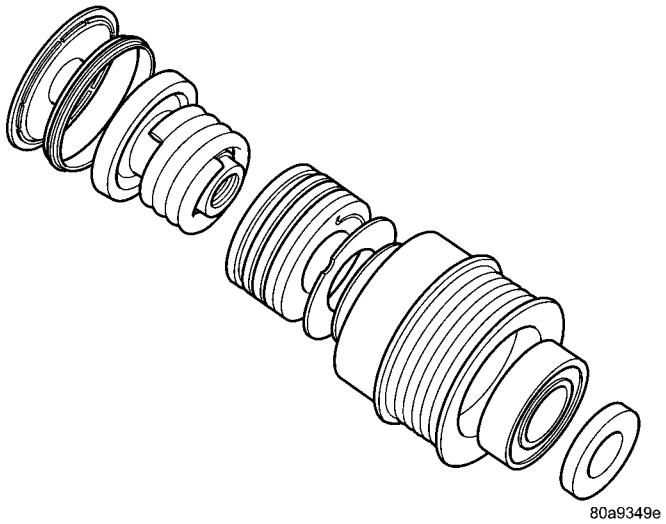

Fig. 5 GENERATOR DECOUPLER PULLEY

GENERATOR DECOUPLER PULLEY (Continued)

OPERATION

The generator decoupler is used only with certain engines. The decoupler (Fig. 5) is a one-way clutch designed to help reduce belt tension fluctuation, vibration, reduce fatigue loads, improve belt life, reduce hubloads on components, and reduce noise. Dry operation is used (no grease or lubricants). The decoupler is not temperature sensitive and also has a low sensitivity to electrical load. The decoupler is a non-serviceable item and is to be replaced as an assembly.

DIAGNOSIS AND TESTING - GENERATOR DECOUPLER

CONDITION	POSSIBLE CAUSES	CORRECTION
Does not drive generator (generator not charging)	Internal failure	Replace decoupler
Noise coming from decoupler	Internal failure	Replace decoupler

REMOVAL

The generator decoupler is used only with certain engines.

Two different type generator decoupler pulleys are used. One can be identified by the use of machined splines (Fig. 6). The other can be identified by a hex opening (Fig. 7) and will not use splines.

Different special tools are required to service each different decoupler. Refer to following procedure.

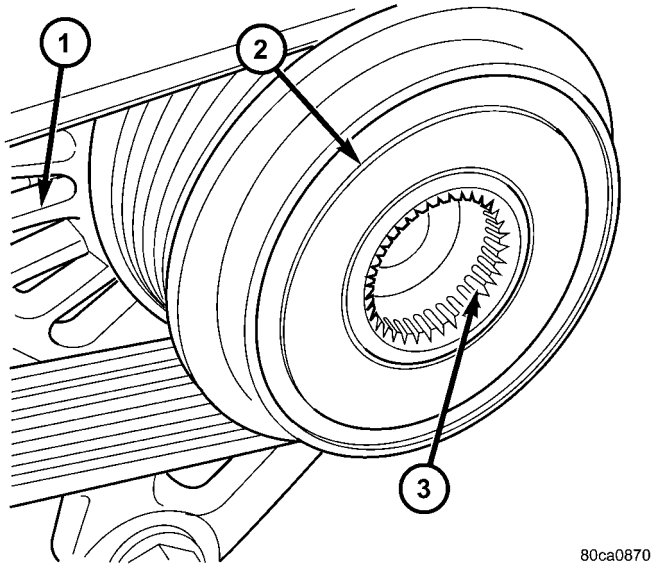

Fig. 6 GENERATOR DECOUPLER PULLEY (INA)

1 - GENERATOR
2 - DECOUPLER (INA)
3 - MACHINED SPLINES

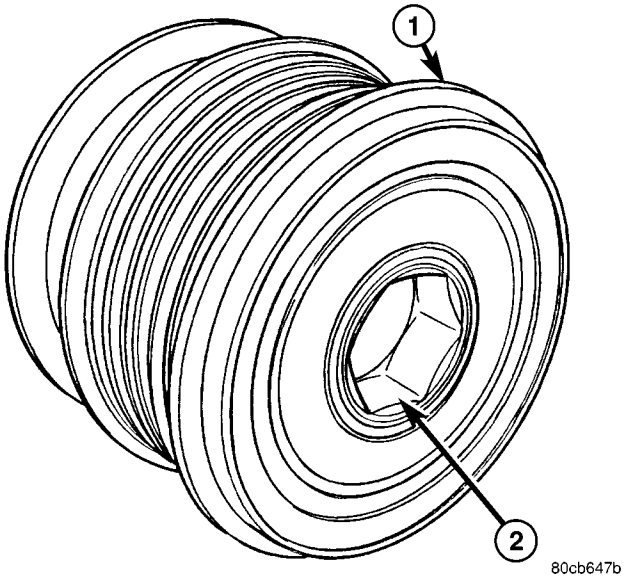

Fig. 7 GENERATOR DECOUPLER PULLEY (LITENS)

1 - DECOUPLER (LITENS)
2 - HEX OPENING

GENERATOR DECOUPLER PULLEY (Continued)

INA Decoupler

(1) Disconnect negative battery cable.

(2) Remove generator and accessory drive belt. Refer to Generator Removal.

(3) Position Special Tool #8823 (VM.1048) into decoupler (Fig. 8).

(4) Determine if end of generator shaft is hex shaped (Fig. 9) or is splined (Fig. 10). If hex is used, insert a 10MM deep socket into tool #8823 (VM.1048) (Fig. 11). If splined, insert a 5/16” 6-point hex driver, or a 10MM 12-point triple square driver into tool #8823 (VM.1048) (Fig. 12).

(5) The generator shaft uses conventional right-hand threads to attach decoupler. To break decoupler loose from generator threads, rotate end of tool clockwise (Fig. 11) or, (Fig. 12).

(6) After breaking loose with tool, unthread decoupler by hand from generator.

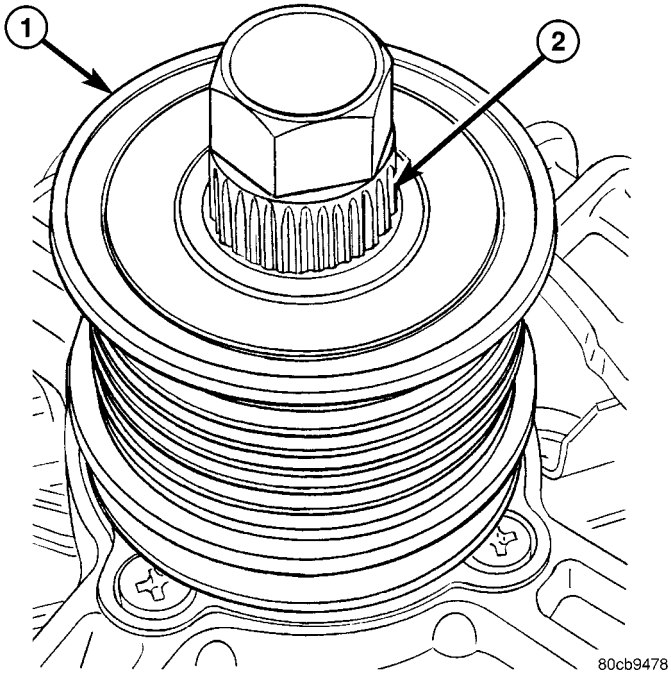

Fig. 8 #8823 TOOL AND INA DECOUPLER

1 - INA DECOUPLER
2 - TOOL #8823 (VM.1048)

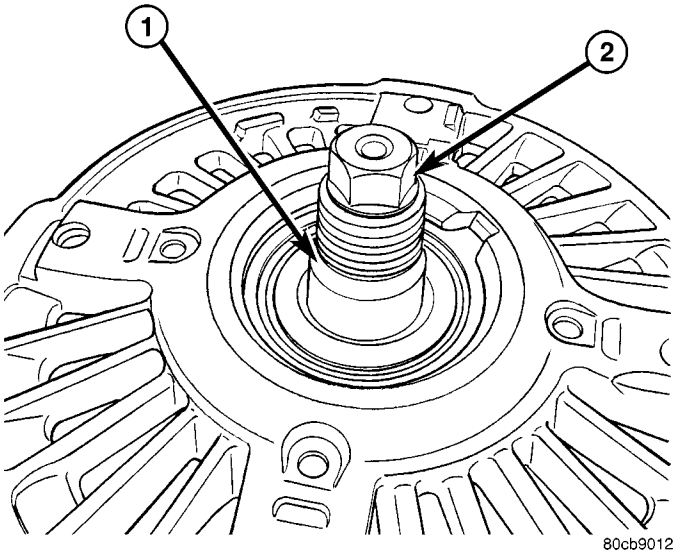

Fig. 9 END OF GENERATOR SHAFT (HEX)

1 - GENERATOR SHAFT
2 - HEX

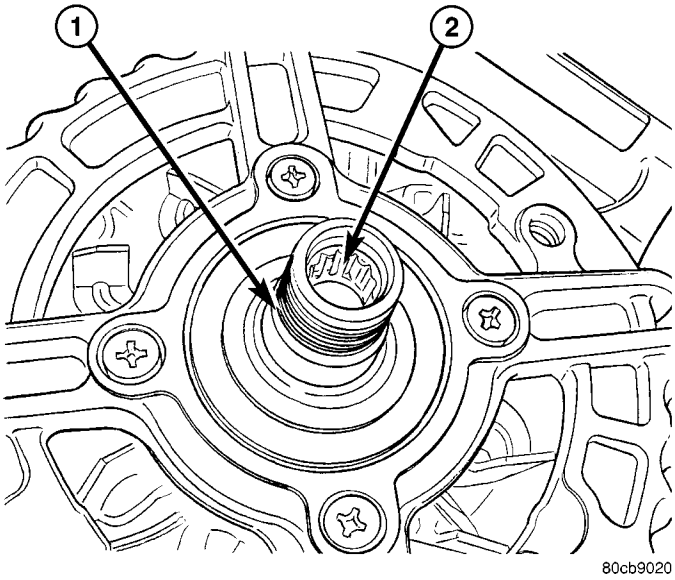

Fig. 10 END OF GENERATOR SHAFT (SPLINED)

1 - GENERATOR SHAFT
2 - SPLINES

GENERATOR DECOUPLER PULLEY (Continued)

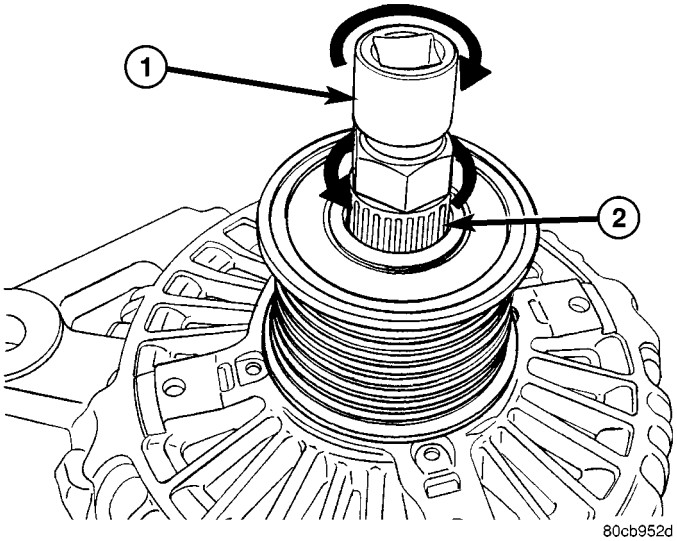

Fig. 11 DECOUPLER REMOVAL (INA-HEX)

1 - DEEP 10 MM SOCKET
2 - TOOL #8823 (VM.1048)

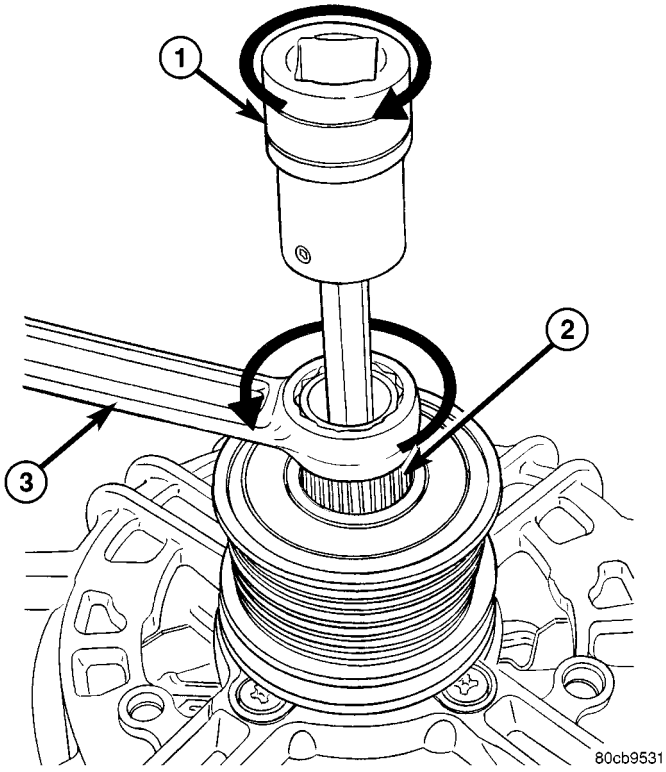

Fig. 12 DECOUPLER REMOVAL (INA-SPLINED)

1 - DRIVER
2 - TOOL #8823 (VM.1048)
3 - 17 MM WRENCH

Litens Decoupler

(1) Disconnect negative battery cable.

(2) Remove generator and accessory drive belt. Refer to Generator Removal.

(3) Position Special Tool #8433 (Fig. 13) into decoupler. Align to hex end of generator shaft.

(4) The generator shaft uses conventional right-hand threads to attach decoupler. To break decoupler loose from generator threads, rotate end of tool clockwise (Fig. 14).

(5) After breaking loose with tool, unthread decoupler by hand from generator.

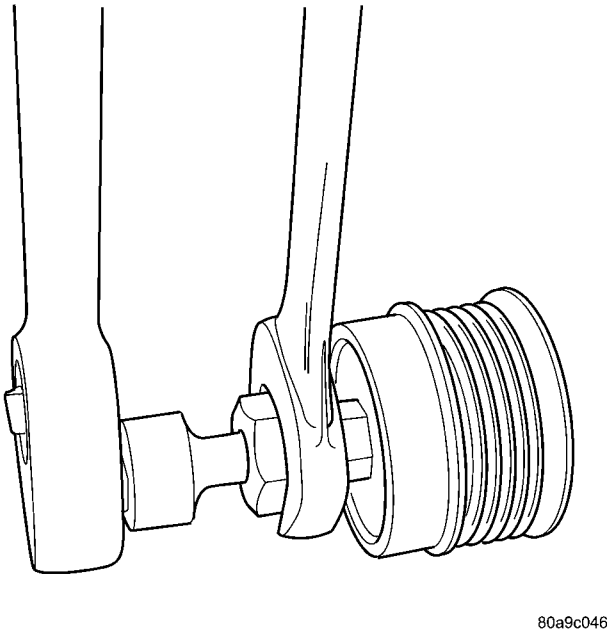

Fig. 13 # 8433 TOOL AND LITENS DECOUPLER

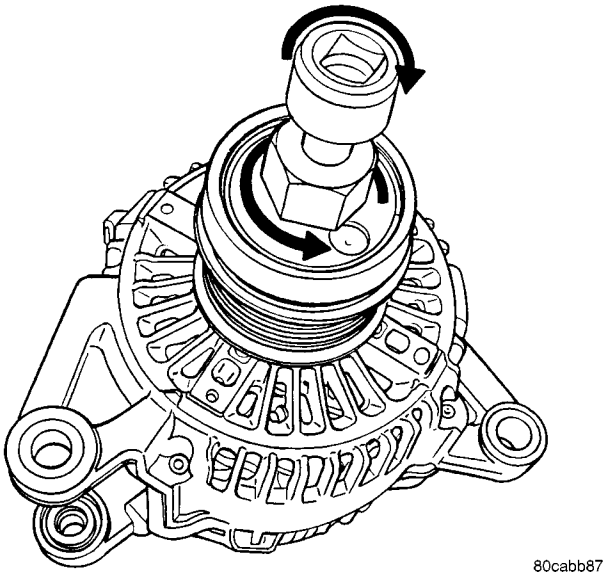

Fig. 14 DECOUPLER REMOVAL (LITENS)

GENERATOR DECOUPLER PULLEY (Continued)

INSTALLATION

INA Decoupler

(1) Thread decoupler pulley onto generator shaft by hand (right-hand threads).

(2) Position Special Tool #8823 (VM.1048) into decoupler (Fig. 8).

(3) Determine if end of generator shaft is hex shaped (Fig. 9) or is splined (Fig. 10). If hex is used, insert a 10MM deep socket into tool #8823 (VM.1048) (Fig. 15). If splined, insert a 5/16" 6-point hex driver, or a 10MM 12-point triple square driver into tool #8823 (VM.1048) (Fig. 16).

(4) **Do not use an adjustable, ratcheting "click type" torque wrench. Most "click type" wrenches will only allow torque to be applied in a clockwise rotation. Use a dial-type or beam-type wrench.** Tighten in counter-clockwise rotation (Fig. 15) or, (Fig. 16). Refer to torque specifications.

(5) Install accessory drive belt, and generator. Refer to Generator Installation.

(6) Connect negative battery cable.

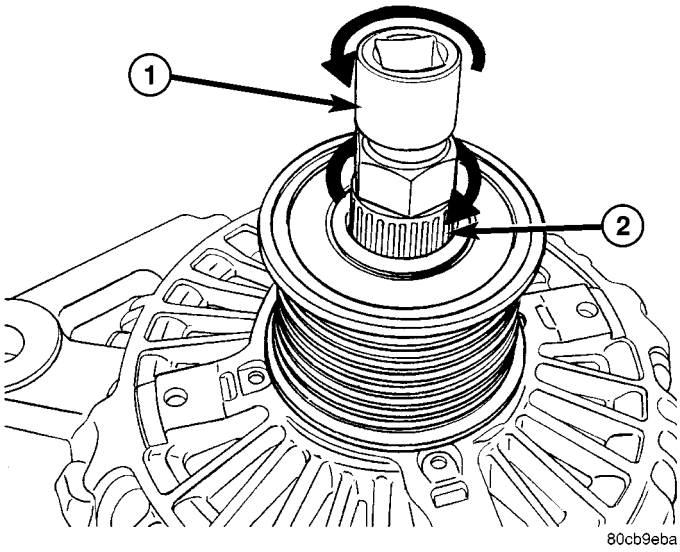

Fig. 15 DECOUPLER INSTALLATION (INA-HEX)

1 - 10MM DEEP SOCKET
2 - TOOL # 8823 (VM.1048)

Litens Decoupler

(1) Thread decoupler pulley onto generator shaft by hand (right-hand threads).

(2) Position Special Tool 8433 (Fig. 13) into decoupler. Align tool to hex end of generator shaft.

(3) **Do not use an adjustable, ratcheting "click type" torque wrench. Most "click type" wrenches will only allow torque to be applied in a clockwise rotation. Use a dial-type or beam-type wrench.** Tighten in counter-clockwise rotation (Fig. 17). Refer to torque specifications.

(4) Install accessory drive belt, and generator. Refer to Generator Installation.

(5) Connect negative battery cable.

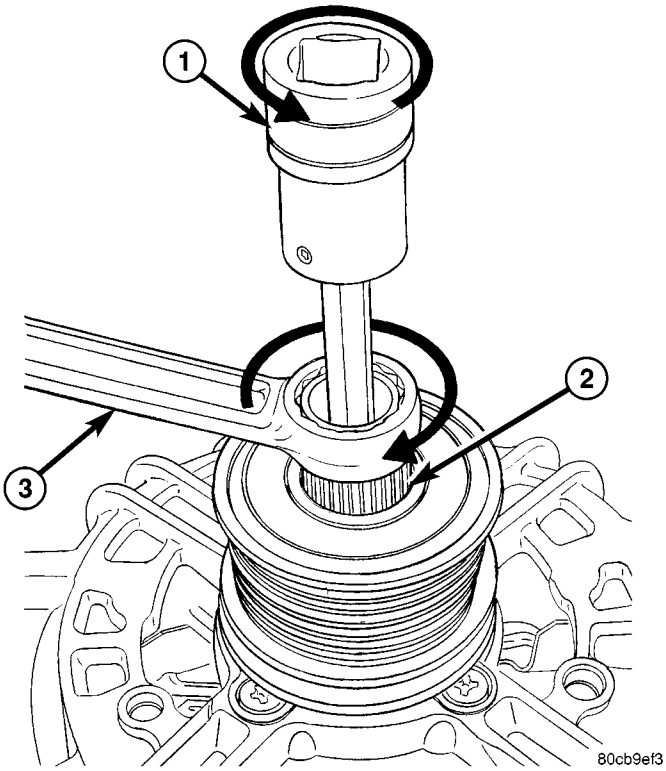

Fig. 16 DECOUPLER INSTALLATION (INA SPLINED)

1 - DRIVER
2 - TOOL # 8823 (VM.1048)
3 - BACKUP WRENCH

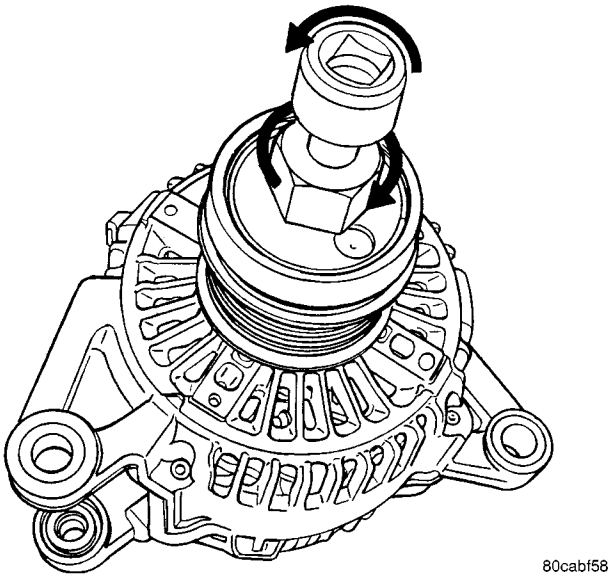

Fig. 17 DECOUPLER INSTALLATION (Litens)

VOLTAGE REGULATOR

DESCRIPTION

The Electronic Voltage Regulator (EVR) is not a separate component. It is actually a voltage regulating circuit located within the Powertrain Control Module (PCM). The EVR is not serviced separately. If replacement is necessary, the PCM must be replaced.

OPERATION

The amount of DC current produced by the generator is controlled by EVR circuitry contained within the Powertrain Control Module (PCM). This circuitry is connected in series with the generators second rotor field terminal and its ground.

Voltage is regulated by cycling the ground path to control the strength of the rotor magnetic field. The EVR circuitry monitors system line voltage (B+) and battery temperature (refer to Battery Temperature Sensor for more information). It then determines a target charging voltage. If sensed battery voltage is 0.5 volts or lower than the target voltage, the PCM grounds the field winding until sensed battery voltage is 0.5 volts above target voltage. A circuit in the PCM cycles the ground side of the generator field up to 100 times per second (100Hz), but has the capability to ground the field control wire 100% of the time (full field) to achieve the target voltage. If the charging rate cannot be monitored (limp-in), a duty cycle of 25% is used by the PCM in order to have some generator output. Also refer to Charging Operation for additional information.

STARTING SYSTEM

TABLE OF CONTENTS

page

STARTING SYSTEM
DESCRIPTION 32
OPERATION 32
DIAGNOSIS AND TESTING - STARTING SYSTEM 33
INSPECTION - STARTING SYSTEM 37
SPECIFICATIONS
TORQUE - GAS POWERED 38
STARTER MOTOR - GAS POWERED 39
STARTER MOTOR
DIAGNOSIS AND TESTING - STARTER MOTOR 39
REMOVAL 40
INSTALLATION 40
STARTER MOTOR RELAY
DESCRIPTION 41
OPERATION 41
DIAGNOSIS AND TESTING - STARTER RELAY . 42
REMOVAL 43
INSTALLATION 43

STARTING SYSTEM

DESCRIPTION

The starting system consists of:

- Starter relay
- Starter motor (including an integral starter solenoid)

Other components to be considered as part of starting system are:

- Battery
- Battery cables
- Ignition switch and key lock cylinder
- Clutch pedal position switch (manual transmission)
- Park/neutral position switch (automatic transmission)
- Wire harnesses and connections.

The Battery, Starting, and Charging systems operate in conjunction with one another, and must be tested as a complete system. For correct operation of starting/charging systems, all components used in these 3 systems must perform within specifications. When attempting to diagnose any of these systems, it is important that you keep their interdependency in mind.

The diagnostic procedures used in each of these groups include the most basic conventional diagnostic methods, to the more sophisticated On-Board Diagnostics (OBD) built into the Powertrain Control Module (PCM). Use of an induction-type milliampere ammeter, volt/ohmmeter, battery charger, carbon pile rheostat (load tester), and 12-volt test lamp may be required.

Certain starting system components are monitored by the PCM and may produce a Diagnostic Trouble Code (DTC).

OPERATION

The starting system components form two separate circuits. A high-amperage feed circuit that feeds the starter motor between 150 and 350 amperes (700 amperes - diesel engine), and a low-amperage control circuit that operates on less than 20 amperes. The high-amperage feed circuit components include the battery, the battery cables, the contact disc portion of the starter solenoid, and the starter motor. The low-amperage control circuit components include the ignition switch, the clutch pedal position switch (manual transmission), the park/neutral position switch (automatic transmission), the starter relay, the electromagnetic windings of the starter solenoid, and the connecting wire harness components.

If the vehicle is equipped with a manual transmission, it has a clutch pedal position switch installed in series between the ignition switch and the coil battery terminal of the starter relay. This normally open switch prevents the starter relay from being energized when the ignition switch is turned to the momentary Start position, unless the clutch pedal is depressed. This feature prevents starter motor operation while the clutch disc and the flywheel are engaged. The starter relay coil ground terminal is always grounded on vehicles with a manual transmission.

If the vehicle is equipped with an automatic transmission, battery voltage is supplied through the low-amperage control circuit to the coil battery terminal of the starter relay when the ignition switch is turned to the momentary Start position. The park/

STARTING SYSTEM (Continued)

neutral position switch is installed in series between the starter relay coil ground terminal and ground. This normally open switch prevents the starter relay from being energized and the starter motor from operating unless the automatic transmission gear selector is in the Neutral or Park positions.

When the starter relay coil is energized, the normally open relay contacts close. The relay contacts connect the relay common feed terminal to the relay normally open terminal. The closed relay contacts energize the starter solenoid coil windings.

The energized solenoid pull-in coil pulls in the solenoid plunger. The solenoid plunger pulls the shift lever in the starter motor. This engages the starter overrunning clutch and pinion gear with the starter ring gear on the manual transmission flywheel or on the automatic transmission torque converter or torque converter drive plate.

As the solenoid plunger reaches the end of its travel, the solenoid contact disc completes the high-amperage starter feed circuit and energizes the solenoid plunger hold-in coil. Current now flows between the solenoid battery terminal and the starter motor, energizing the starter.

Once the engine starts, the overrunning clutch protects the starter motor from damage by allowing the starter pinion gear to spin faster than the pinion shaft. When the driver releases the ignition switch to the On position, the starter relay coil is de-energized. This causes the relay contacts to open. When the relay contacts open, the starter solenoid plunger hold-in coil is de-energized.

When the solenoid plunger hold-in coil is de-energized, the solenoid plunger return spring returns the plunger to its relaxed position. This causes the contact disc to open the starter feed circuit, and the shift lever to disengage the overrunning clutch and pinion gear from the starter ring gear.

DIAGNOSIS AND TESTING - STARTING SYSTEM

The battery, starting, and charging systems operate in conjunction with one another, and must be tested as a complete system. For correct starting/charging system operation, all of the components involved in these 3 systems must perform within specifications.

Starting System Diagnosis		
CONDITION	POSSIBLE CAUSE	CORRECTION
STARTER FAILS TO OPERATE.	1. Battery discharged or faulty.	1. Refer to Battery. Charge or replace battery, if required.
	2. Starting circuit wiring faulty.	2. Refer to 8, Wiring Diagrams. Test and repair starter feed and/or control circuits, if required.
	3. Starter relay faulty.	3. Refer to Starter Relay in Diagnosis and Testing. Replace starter relay if required.
	4. Ignition switch faulty.	4. Refer to Ignition Switch and Key Lock Cylinder. Replace ignition switch if required.
	5. Clutch pedal position switch faulty.	5. Refer to Clutch Pedal Position Switch.
	6. Park/Neutral position switch faulty or misadjusted.	6. Refer to Park/Neutral Position Switch. Replace park/neutral position switch if required.
	7. Starter solenoid faulty.	7. Refer to Starter Motor. Replace starter motor assembly if required.
	8. Starter motor faulty.	8. If all other starting system components and circuits test OK, replace starter motor.
STARTER ENGAGES, FAILS TO TURN ENGINE.	1. Battery discharged or faulty.	1. Refer to Battery. Charge or replace battery if required.
	2. Starting circuit wiring faulty.	2. Refer to 8, Wiring Diagrams. Test and repair starter feed and/or control circuits if required.
	3. Starter motor faulty.	3. If all other starting system components and circuits test OK, replace starter motor assembly.
	4. Engine seized.	4. Refer to Engine Diagnosis in the Diagnosis and Testing section of 9, Engine.

STARTING SYSTEM (Continued)

Starting System Diagnosis		
CONDITION	POSSIBLE CAUSE	CORRECTION
STARTER ENGAGES, SPINS OUT BEFORE ENGINE STARTS.	1. Starter ring gear faulty.	1. Refer to Starter Motor Removal and Installation. Remove starter motor to inspect starter ring gear. Replace starter ring gear if required.
	2. Starter motor faulty.	2. If all other starting system components and circuits test OK, replace starter motor assembly.
STARTER DOES NOT DISENGAGE.	1. Starter motor improperly installed.	1. Refer to Starter Motor Removal and Installation. Tighten starter mounting hardware to correct torque specifications.
	2. Starter relay faulty.	2. Refer to Starter Relay Diagnosis and Testing. Replace starter relay if required.
	3. Ignition switch faulty.	3. Refer to Ignition Switch and Key Lock Cylinder. Replace ignition switch if required.
	4. Starter motor faulty.	4. If all other starting system components and circuits test OK, replace starter motor.

INSPECTION

For complete starter wiring circuit diagrams, refer to 8, Wiring Diagrams. Before removing any unit from starting system for repair or diagnosis, perform the following inspections:

WARNING: ON VEHICLES EQUIPPED WITH AIRBAGS, REFER TO 8, PASSIVE RESTRAINT SYSTEMS, BEFORE ATTEMPTING ANY STEERING WHEEL, STEERING COLUMN, OR INSTRUMENT PANEL COMPONENT DIAGNOSIS OR SERVICE. FAILURE TO TAKE THE PROPER PRECAUTIONS COULD RESULT IN ACCIDENTAL AIRBAG DEPLOYMENT AND POSSIBLE PERSONAL INJURY.

- **Battery** - Visually inspect battery for indications of physical damage and loose or corroded cable connections. Determine state-of-charge and cranking capacity of battery. Charge or replace battery if required. Refer to **Battery** in 8, Battery. **Note: If equipped with diesel engine, a dual battery system may be used, and both batteries must be inspected.**
- **Ignition Switch** - Visually inspect ignition switch for indications of physical damage and loose or corroded wire harness connections. Refer to **Ignition Switch and Key Lock Cylinder.**
- **Clutch Pedal Position Switch** - If equipped with manual transmission, visually inspect clutch pedal position switch for indications of physical damage and loose or corroded wire harness connections. Refer to **Clutch Pedal Position Switch** in 6, Clutch.
- **Park/Neutral Position Switch** - If equipped with automatic transmission, visually inspect park/neutral position switch for indications of physical damage and loose or corroded wire harness connections. Refer to **Park/Neutral Position Switch** in 21, Transmission.
- **Starter Relay** - Visually inspect starter relay for indications of physical damage and loose or corroded wire harness connections.
- **Starter Motor** - Visually inspect starter motor for indications of physical damage and loose or corroded wire harness connections.
- **Starter Solenoid** - Visually inspect starter solenoid for indications of physical damage and loose or corroded wire harness connections.
- **Wiring** - Visually inspect wire harnesses for damage. Repair or replace any faulty wiring, as required. Refer to 8, Wiring Diagrams.

TESTING

COLD CRANKING TEST

For complete starter wiring circuit diagrams, refer to 8, Wiring Diagrams. The battery must be fully-charged and load-tested before proceeding. Refer to **Battery** in 8, Battery.

(1) Connect volt-ampere tester to battery terminals (Fig. 1). See instructions provided by manufacturer of volt-ampere tester being used. **Note: Certain diesel equipped models use dual batteries. If equipped with dual battery system, tester should be connected to battery on left side of vehicle only. Also, tester current reading must be taken from positive battery cable lead that connects to starter motor.**

(2) Fully engage parking brake.

(3) If equipped with manual transmission, place gearshift selector lever in Neutral position and block clutch pedal in fully depressed position. If equipped

STARTING SYSTEM (Continued)

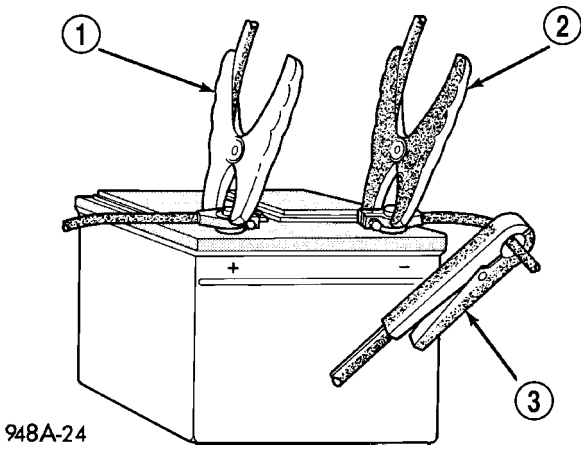

Fig. 1 VOLTS-AMPS TESTER CONNECTIONS - TYPICAL

1 - POSITIVE CLAMP
2 - NEGATIVE CLAMP
3 - INDUCTION AMMETER CLAMP

with automatic transmission, place gearshift selector lever in Park position.

(4) Verify that all lamps and accessories are turned off.

(5) To prevent a gasoline engine from starting, remove Automatic ShutDown (ASD) relay. To prevent a diesel engine from starting, remove Fuel Pump Relay. These relays are located in Power Distribution Center (PDC). Refer to label on PDC cover for relay location.

WARNING: IF EQUIPPED WITH DIESEL ENGINE, ATTEMPT TO START ENGINE A FEW TIMES BEFORE PROCEEDING WITH FOLLOWING STEP.

(6) Rotate and hold ignition switch in Start position. Note cranking voltage and current (amperage) draw readings shown on volt-ampere tester.

(a) If voltage reads below 9.6 volts, refer to **Starter Motor** in Diagnosis and Testing. If starter motor is OK, refer to **Engine Diagnosis** in 9, Engine for further testing of engine. If starter motor is not OK, replace faulty starter motor.

(b) If voltage reads above 9.6 volts and current (amperage) draw reads below specifications, refer to **Feed Circuit Test** in this section.

(c) If voltage reads 12.5 volts or greater and starter motor does not turn, refer to **Control Circuit Testing** in this section.

(d) If voltage reads 12.5 volts or greater and starter motor turns very slowly, refer to **Feed Circuit Test** in this section.

NOTE: A cold engine will increase starter current (amperage) draw reading, and reduce battery voltage reading.

FEED CIRCUIT TEST

The starter feed circuit test (voltage drop method) will determine if there is excessive resistance in high-amperage feed circuit. For complete starter wiring circuit diagrams, refer 8, Wiring Diagrams.

When performing these tests, it is important to remember that voltage drop is giving an indication of resistance between two points at which voltmeter probes are attached.

Example: When testing resistance of positive battery cable, touch voltmeter leads to positive battery cable clamp and cable connector at starter solenoid. If you probe positive battery terminal post and cable connector at starter solenoid, you are reading combined voltage drop in positive battery cable clamp-to-terminal post connection and positive battery cable.

The following operation will require a voltmeter accurate to 1/10 (0.10) volt. Before performing tests, be certain that following procedures are accomplished:

- Battery is fully-charged and load-tested. Refer to **Battery** in 8, Battery.
- Fully engage parking brake.
- If equipped with manual transmission, place gearshift selector lever in Neutral position and block clutch pedal in fully depressed position. If equipped with automatic transmission, place gearshift selector lever in Park position.
- Verify that all lamps and accessories are turned off.
- To prevent a gasoline engine from starting, remove Automatic ShutDown (ASD) relay. To prevent a diesel engine from starting, remove Fuel Pump Relay. These relays are located in Power Distribution Center (PDC). Refer to label on PDC cover for relay location.

STARTING SYSTEM (Continued)

(1) Connect positive lead of voltmeter to negative battery cable terminal post. Connect negative lead of voltmeter to negative battery cable clamp (Fig. 2). Rotate and hold ignition switch in Start position. Observe voltmeter. If voltage is detected, correct poor contact between cable clamp and terminal post. **Note: Certain diesel equipped models use dual batteries. If equipped with dual battery system, procedure must be performed twice, once for each battery.**

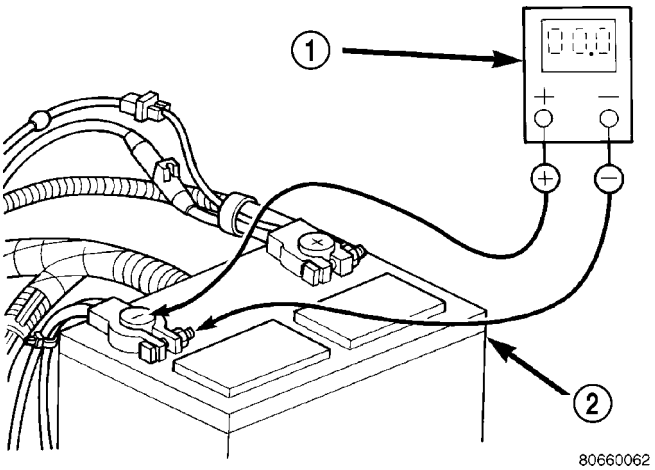

Fig. 2 TEST NEGATIVE BATTERY CABLE CONNECTION RESISTANCE - TYPICAL

1 - VOLTMETER
2 - BATTERY

(2) Connect positive lead of voltmeter to positive battery terminal post. Connect negative lead of voltmeter to battery positive cable clamp (Fig. 3). Rotate and hold ignition switch in Start position. Observe voltmeter. If voltage is detected, correct poor contact between cable clamp and terminal post. **Note: Certain diesel equipped models use dual batteries. If equipped with dual battery system, this procedure must be performed twice, once for each battery.**

(3) Connect voltmeter to measure between battery positive terminal post and starter solenoid battery terminal stud (Fig. 4). Rotate and hold ignition switch in Start position. Observe voltmeter. If reading is above 0.2 volt, clean and tighten battery cable connection at solenoid. Repeat test. If reading is still above 0.2 volt, replace faulty positive battery cable. **Note: Certain diesel equipped models use dual batteries. If equipped with dual battery system, this procedure must be performed on driver side battery only.**

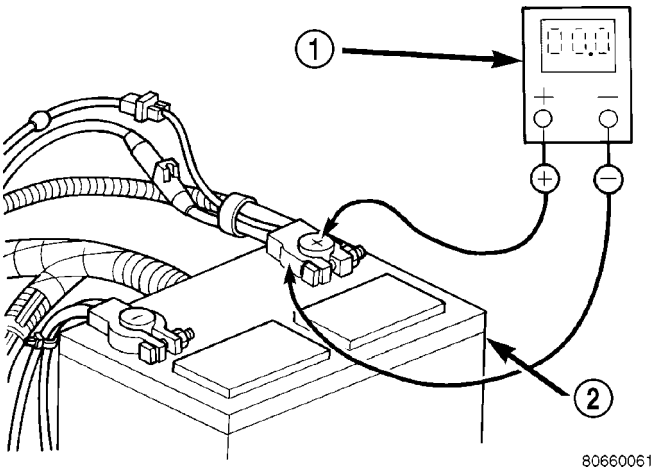

Fig. 3 TEST POSITIVE BATTERY CABLE CONNECTION RESISTANCE - TYPICAL

1 - VOLTMETER
2 - BATTERY

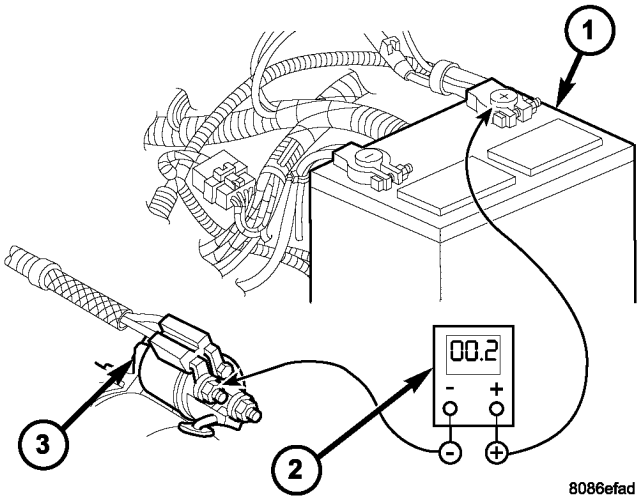

Fig. 4 TEST POSITIVE BATTERY CABLE

1 - BATTERY
2 - VOLTMETER
3 - STARTER MOTOR

STARTING SYSTEM (Continued)

(4) Connect voltmeter to measure between negative battery terminal post and a good clean ground on engine block (Fig. 5). Rotate and hold ignition switch in Start position. Observe voltmeter. If reading is above 0.2 volt, clean and tighten negative battery cable attachment on engine block. Repeat test. If reading is still above 0.2 volt, replace faulty negative battery cable. **Note: Certain diesel equipped models use dual batteries. If equipped with dual battery system, this procedure must be performed twice, once for each battery.**

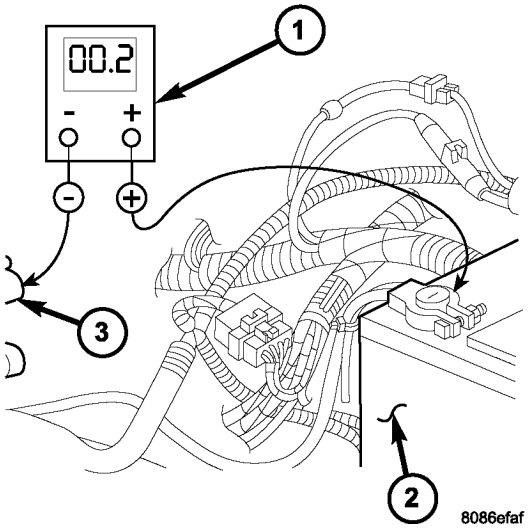

Fig. 5 TEST GROUND CIRCUIT RESISTANCE - TYPICAL

1 - VOLTMETER
2 - BATTERY
3 - ENGINE GROUND

(5) Connect positive lead of voltmeter to starter housing. Connect negative lead of voltmeter to negative battery terminal post (Fig. 6). Rotate and hold ignition switch in Start position. Observe voltmeter. If reading is above 0.2 volt, correct poor starter to engine block ground contact. **Note: Certain diesel equipped models use dual batteries. If equipped with dual battery system, this procedure must be performed on driver side battery only.**

(6) If equipped with dual battery system (certain diesel equipped models), connect positive lead of voltmeter to positive battery cable clamp on battery located on left side of vehicle. Connect negative lead of voltmeter to positive battery terminal post on battery located on right side of vehicle. Rotate and hold ignition switch in Start position. Observe voltmeter. If reading is above 0.2 volt, clean and tighten battery cables at both batteries. Repeat test. If reading is still above 0.2 volt, replace faulty positive battery cable.

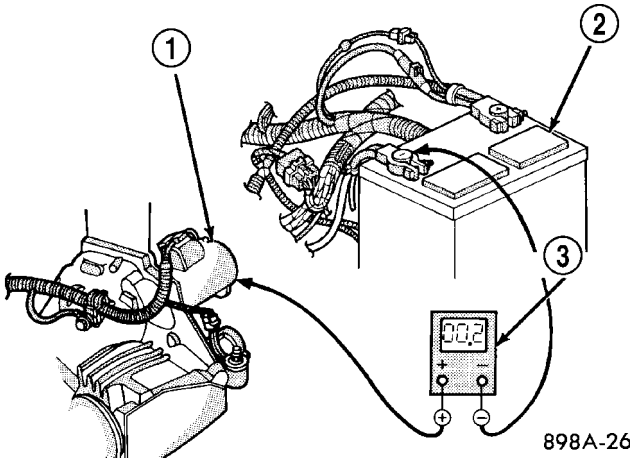

Fig. 6 TEST STARTER GROUND - TYPICAL

1 - STARTER MOTOR
2 - BATTERY
3 - VOLTMETER

If resistance tests detect no feed circuit problems, refer to **Starter Motor** in the Diagnosis and Testing.

CONTROL CIRCUIT TESTING

The starter control circuit components should be tested in the order in which they are listed, as follows:

- **Starter Relay** - Refer to **Starter Relay** Diagnosis and Testing.
- **Starter Solenoid** - Refer to **Starter Motor** Diagnosis and Testing.
- **Ignition Switch** - Refer to **Ignition Switch and Key Lock Cylinder**
- **Clutch Pedal Position Switch** - If equipped with manual transmission, refer to **Clutch Pedal Position Switch** in 6, Clutch.
- **Park/Neutral Position Switch** - If equipped with automatic transmission, refer to **Park/Neutral Position Switch** in 21, Transmission.
- **Wire harnesses and connections** - Refer to 8, Wiring Diagrams.

INSPECTION - STARTING SYSTEM

The following starting system components should be carefully inspected whenever any starting system problem is encountered.

STARTING SYSTEM (Continued)

WARNING: ON VEHICLES EQUIPPED WITH AIRBAGS, DISABLE AIRBAG SYSTEM BEFORE ATTEMPTING ANY STEERING WHEEL, STEERING COLUMN, OR INSTRUMENT PANEL COMPONENT DIAGNOSIS OR SERVICE. DISCONNECT AND ISOLATE BATTERY NEGATIVE (GROUND) CABLE, THEN WAIT TWO MINUTES FOR AIRBAG SYSTEM CAPACITOR TO DISCHARGE BEFORE PERFORMING FURTHER DIAGNOSIS OR SERVICE. THIS IS THE ONLY SURE WAY TO DISABLE AIRBAG SYSTEM. FAILURE TO TAKE PROPER PRECAUTIONS COULD RESULT IN ACCIDENTAL AIRBAG DEPLOYMENT AND POSSIBLE PERSONAL INJURY.

Battery

- Visually inspect battery for indications of physical damage and loose or corroded cable connections. Determine state-of-charge and cranking capacity of battery. Charge or replace battery, if required. Refer to **Battery** for battery cleaning and inspection procedures.

Ignition Switch

- Visually inspect ignition switch for indications of physical damage and loose or corroded wire harness connections. Clean corroded connections as required. Refer to **Wiring Diagrams**. Refer to **Ignition Switch and Key Lock Cylinder** for ignition switch service procedures.

Clutch Pedal Position Switch

- If vehicle is equipped with a manual transmission, visually inspect clutch pedal position switch for indications of physical damage and loose or corroded wire harness connections. Clean corroded connections as required. Refer to **Clutch Hydraulic Linkage** for clutch pedal position switch service procedures.

Park/Neutral Position Switch

- If vehicle is equipped with an automatic transmission, visually inspect park/neutral position switch for indications of physical damage and loose or corroded wire harness connections. Clean corroded connections as required. Refer to **Park/Neutral Position Switch** for park/neutral position switch service procedures.

Starter Relay

- Visually inspect starter relay for indications of physical damage and loose or corroded wire harness connections. Clean corroded connections as required. Refer to **Starter Relay** for starter relay service procedures.

Starter Motor

- Visually inspect starter motor for indications of physical damage and loose or corroded wire harness connections. Clean corroded connections as required. If problem being diagnosed involves improper starter engagement, disengagement or noise complaints, starter motor should be removed. With starter motor removed, inspect starter pinion and ring gears for damaged or missing teeth. Replace faulty components as required. Refer to **Starter Motor** for removal/installation procedures.

Starter Solenoid

- Visually inspect starter solenoid for indications of physical damage and loose or corroded wire harness connections. Clean corroded connections as required. Refer to **Starter Motor** for starter solenoid service procedures.

Wiring

- Visually inspect starting system wire harnesses for indications of physical damage. Repair or replace any faulty wiring, as required. Refer to **Wiring Diagrams** for repair or connector and terminal service procedures.

SPECIFICATIONS

TORQUE - GAS POWERED

DESCRIPTION	N-m	Ft. Lbs.	In. Lbs.
Starter Solenoid Battery Cable Nut	11	-	100
Starter Mounting Bolts - 2.4L	54	40	-
Starter Mounting Bolts -3.7L	54	40	-
Starter Heat Shield Mounting Bolts	6	-	55

STARTING SYSTEM (Continued)

STARTER MOTOR - GAS POWERED

Starter Motor and Solenoid	
Manufacturer	Mitsubishi
Engine Application	2.4L / 3.7L
Power Rating	1.4 Kilowatt (1.9 Horsepower)
Voltage	12 Volts
** Number of Permanent Magnets	6
Number of Brushes	4
Drive Type	Planetary Gear Reduction
Free Running Test Voltage	11.2 Volts
Free Running Test Maximum Amperage Draw	90 Amperes
Free Running Test Minimum Speed	2400 rpm
Solenoid Closing Maximum Voltage Required	7.8 Volts
* Cranking Amperage Draw Test	160 Amperes
*Test at operating temperature. Cold engine, tight (new) engine, or heavy oil will increase starter amperage draw.	
**The starter is equipped with permanent magnets. Never strike the starter case to attempt to loosen a sticking/ stuck armature as permanent magnets may crack or break.	

STARTER MOTOR

DIAGNOSIS AND TESTING - STARTER MOTOR

Correct starter motor operation can be confirmed by performing the following free running bench test. This test can only be performed with starter motor removed from vehicle. Refer to Specifications for starter motor specifications.

(1) Remove starter motor from vehicle. Refer to Starter Motor Removal and Installation.

(2) Mount starter motor securely in a soft-jawed bench vise. The vise jaws should be clamped on the mounting flange of starter motor. Never clamp on starter motor by field frame.

(3) Connect a suitable volt-ampere tester and a 12-volt battery to starter motor in series, and set ammeter to 100 ampere scale. See instructions provided by manufacturer of volt-ampere tester being used.

(4) Install jumper wire from solenoid terminal to solenoid battery terminal. The starter motor should operate. If starter motor fails to operate, replace faulty starter motor assembly.

(5) Adjust carbon pile load of tester to obtain free running test voltage. Refer to Specifications for starter motor free running test voltage specifications.

(6) Note reading on ammeter and compare reading to free running test maximum amperage draw. Refer to Specifications for starter motor free running test maximum amperage draw specifications.

(7) If ammeter reading exceeds maximum amperage draw specification, replace faulty starter motor assembly.

STARTER SOLENOID

This test can only be performed with starter motor removed from vehicle.

(1) Remove starter motor from vehicle. Refer to Starter Motor Removal and Installation.

(2) Disconnect wire from solenoid field coil terminal.

(3) Check for continuity between solenoid terminal and solenoid field coil terminal with a continuity tester (Fig. 7). There should be continuity. If OK, go to Step 4. If not OK, replace faulty starter motor assembly.

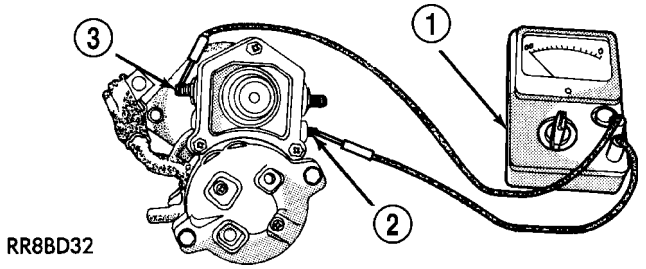

Fig. 7 CONTINUITY BETWEEN SOLENOID AND FIELD COIL TERMINALS - TYPICAL

1 - OHMMETER
2 - SOLENOID TERMINAL
3 - FIELD COIL TERMINAL

STARTER MOTOR (Continued)

(4) Check for continuity between solenoid terminal and solenoid case (Fig. 8). There should be continuity. If not OK, replace faulty starter motor assembly.

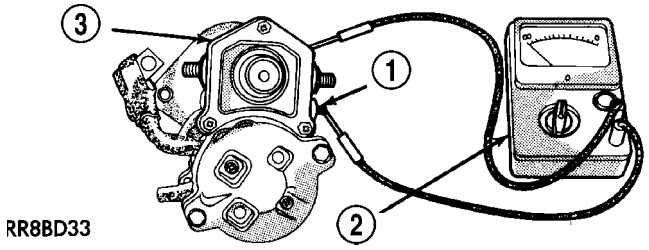

Fig. 8 CONTINUITY BETWEEN SOLENOID TERMINAL AND CASE - TYPICAL

1 - SOLENOID TERMINAL
2 - OHMMETER
3 - SOLENOID

REMOVAL

2.4L 4–Cylinder

(1) Disconnect and isolate negative battery cable.
(2) Raise and support vehicle.
(3) Remove solenoid wire from solenoid terminal (Fig. 11).
(4) Remove battery cable from stud on starter solenoid (Fig. 11).
(5) Remove 2 starter mounting bolts (Fig. 9) and remove starter from vehicle.

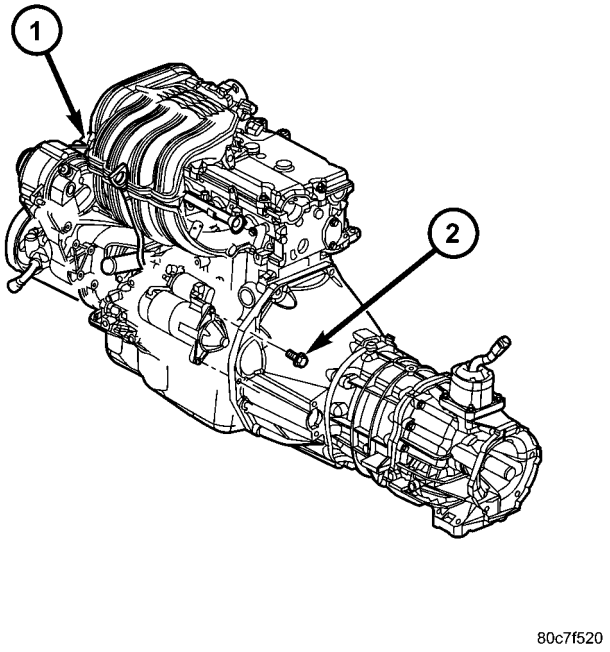

Fig. 9 STARTER - 2.4L

1 - STARTER
2 - MOUNTING BOLTS (2)

3.7L V-6

(1) Disconnect and isolate negative battery cable.
(2) Raise and support vehicle.
(3) Remove 2 flange bolts securing left exhaust downpipe to crossover pipe. Lower pipe slightly to allow front propeller shaft removal.
(4) Remove front propeller shaft.
(5) Remove 2 starter heat shield bolts at side of starter (Fig. 10).
(6) Remove starter heat shield nut at front of starter (Fig. 10).

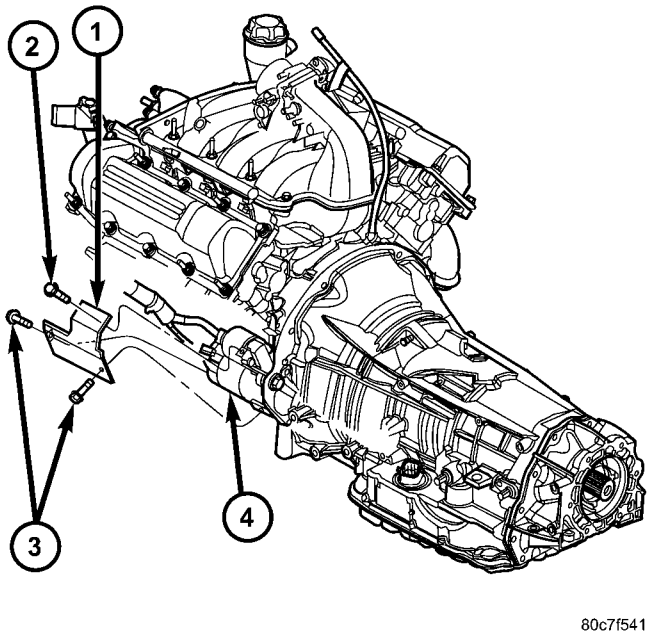

Fig. 10 STARTER HEAT SHIELD - 3.7L

1 - STARTER HEAT SHIELD
2 - HEAT SHIELD BOLTS
3 - HEAT SHIELD BOLTS
4 - STARTER

(7) Remove starter heat shield.
(8) Remove solenoid wire from solenoid terminal (Fig. 11).
(9) Remove battery cable from stud on starter solenoid (Fig. 11).
(10) Remove 2 starter mounting bolts (Fig. 12).
(11) Position front of starter to face rear of vehicle. Rotate starter until solenoid position is located below starter.
(12) Remove starter from vehicle by passing it between exhaust pipe and transmission bellhousing.

INSTALLATION

2.4L 4–Cylinder

(1) Position starter into bellhousing and install 2 bolts. Refer to torque specifications.

STARTER MOTOR (Continued)

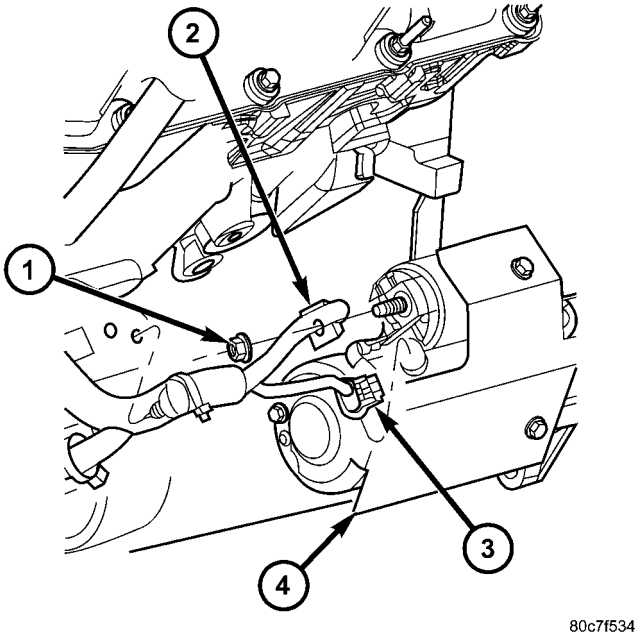

Fig. 11 STARTER ELECTRICAL CONNECTORS - 2.4L/3.7L

1 - BATERY CABLE NUT
2 - BATTERY CABLE
3 - SOLENOID CONNECTOR
4 - HEAT SHIELD

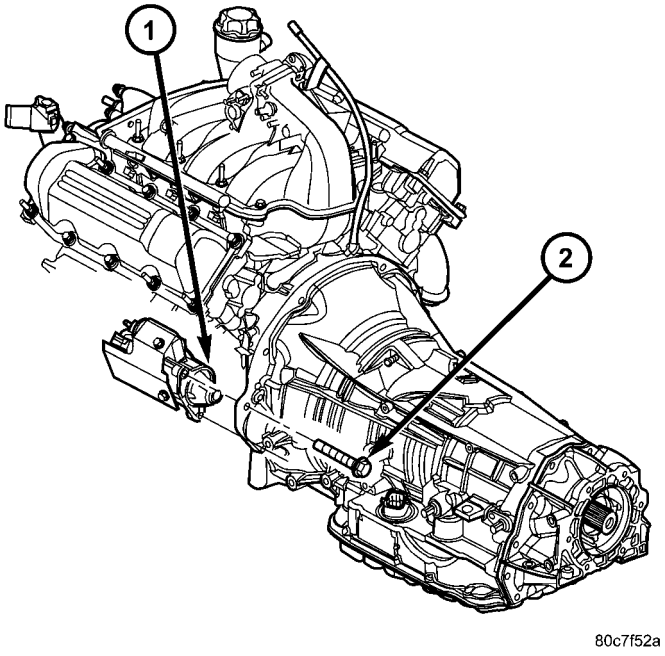

Fig. 12 STARTER - 3.7L

1 - STARTER
2 - MOUNTING BOLTS (2)

(2) Install battery cable and nut to stud on starter solenoid. Refer to torque specifications.

(3) Install solenoid wire connector to solenoid terminal.

(4) Lower vehicle.

(5) Connect negative battery cable.

3.7L V-6

(1) Position front of starter towards rear of vehicle with solenoid position rotated until it is located below starter. Install starter by passing it between exhaust pipe and transmission bellhousing.

(2) Position starter into bellhousing and install 2 bolts. Refer to torque specifications.

(3) Install battery cable and nut to stud on starter solenoid. Refer to torque specifications.

(4) Install solenoid wire connector to solenoid terminal.

(5) Position starter heat shield and install nut at front of starter.

(6) Install 2 starter heat shield bolts at side of starter.

(7) Install front propeller shaft.

(8) Install 2 flange bolts securing left exhaust downpipe to crossover pipe.

(9) Lower vehicle.

(10) Connect negative battery cable.

STARTER MOTOR RELAY

DESCRIPTION

The starter relay is an electromechanical device that switches battery current to the pull-in coil of the starter solenoid when ignition switch is turned to Start position. The starter relay is located in the Power Distribution Center (PDC) in the engine compartment. See PDC cover for relay identification and location.

The starter relay is a International Standards Organization (ISO) relay. Relays conforming to ISO specifications have common physical dimensions, current capacities, terminal patterns, and terminal functions.

The starter relay cannot be repaired or adjusted and, if faulty or damaged, it must be replaced.

OPERATION

The ISO relay consists of an electromagnetic coil, a resistor or diode, and three (two fixed and one movable) electrical contacts. The movable (common feed) relay contact is held against one of the fixed contacts (normally closed) by spring pressure. When electromagnetic coil is energized, it draws the movable contact away from normally closed fixed contact, and holds it against the other (normally open) fixed contact.

STARTER MOTOR RELAY (Continued)

When electromagnetic coil is de-energized, spring pressure returns movable contact to normally closed position. The resistor or diode is connected in parallel with electromagnetic coil within relay, and helps to dissipate voltage spikes produced when coil is de-energized.

DIAGNOSIS AND TESTING - STARTER RELAY

The starter relay is located in the Power Distribution Center (PDC) in engine compartment. Refer to label on PDC cover for relay location.

RELAY TEST

(1) Remove starter relay (Fig. 13) from PDC.

(2) A relay in de-energized position should have continuity between terminals 87A and 30, and no continuity between terminals 87 and 30. If OK, go to Step 3. If not OK, replace faulty relay.

(3) Resistance between terminals 85 and 86 (electromagnet) should be 75 ± 5 ohms. If OK, go to Step 4. If not OK, replace faulty relay.

(4) Connect a battery to terminals 85 and 86. There should now be continuity between terminals 30 and 87, and no continuity between terminals 87A and 30. If OK, perform following Relay Circuit Test. If not OK, replace faulty relay.

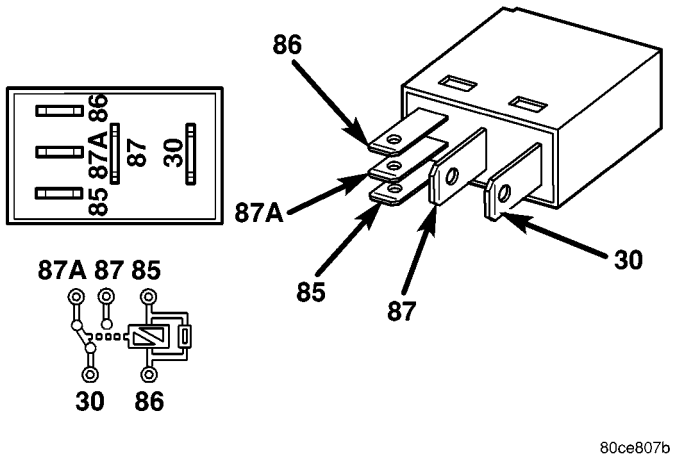

Fig. 13 STARTER RELAY (ISO MICRO RELAY)

30 - COMMON FEED
85 - COIL GROUND
86 - COIL BATTERY
87 - NORMALLY OPEN
87A - NORMALLY CLOSED

RELAY CIRCUIT TEST

(1) The relay common feed terminal cavity (30) is connected to battery voltage and should be hot at all times. If OK, go to Step 2. If not OK, repair open circuit to fused B(+) fuse in PDC as required.

(2) The relay normally closed terminal (87A) is connected to terminal 30 in de-energized position, but is not used for this application. Go to Step 3.

(3) The relay normally open terminal (87) is connected to common feed terminal (30) in energized position. This terminal supplies battery voltage to starter solenoid field coil. There should be continuity between cavity for relay terminal 87 and starter solenoid terminal at all times. If OK, go to Step 4. If not OK, repair open engine starter motor relay output circuit to starter solenoid as required.

(4) The coil battery terminal (86) is connected to electromagnet in relay. It is energized when ignition switch is held in Start position. On vehicles with a manual transmission, the clutch pedal must be blocked in fully depressed position for this test. Check for battery voltage at cavity for relay terminal 86 with ignition switch in Start position, and no voltage when ignition switch is released to On position. If OK, go to Step 5. If not OK with a manual transmission, disconnect clutch pedal position switch wire harness connector and install a jumper wire between two cavities in body half of connector and check for battery voltage again at cavity for relay terminal 86. If now OK, replace faulty clutch pedal position switch. If still not OK with a manual transmission or if not OK with an automatic transmission, check for open or shorted fused ignition switch output (start) circuit to ignition switch and repair as required. If fused ignition switch output (start) circuit is OK, refer to **Ignition Switch and Key Lock Cylinder.**

(5) The coil ground terminal (85) is connected to electromagnet in relay. On vehicles with manual transmission, it is grounded at all times. On vehicles with automatic transmission, it is grounded through park/neutral position switch only when gearshift selector lever is in Park or Neutral positions. Check for continuity to ground at cavity for relay terminal 85. If not OK with a manual transmission, repair open park/neutral position switch sense circuit to ground as required. If not OK with an automatic transmission, check for open or shorted park/neutral position switch sense circuit to park/neutral position switch and repair, as required. If park/neutral position switch sense circuit checks OK, refer to **Park/Neutral Position Switch.**

STARTER MOTOR RELAY (Continued)

REMOVAL

The starter relay is located in the Power Distribution Center (PDC) (Fig. 14). Refer to label on PDC cover for relay location.

(1) Remove PDC cover.

(2) Remove relay from PDC.

(3) Check condition of relay terminals and PDC connector terminals for damage or corrosion. Repair if necessary before installing relay.

(4) Check for pin height (pin height should be the same for all terminals within the PDC connector). Repair if necessary before installing relay.

INSTALLATION

(1) Refer to Power Distribution Center (PDC) cover for starter relay location.

(2) Install relay to PDC.

(3) Install cover to PDC.

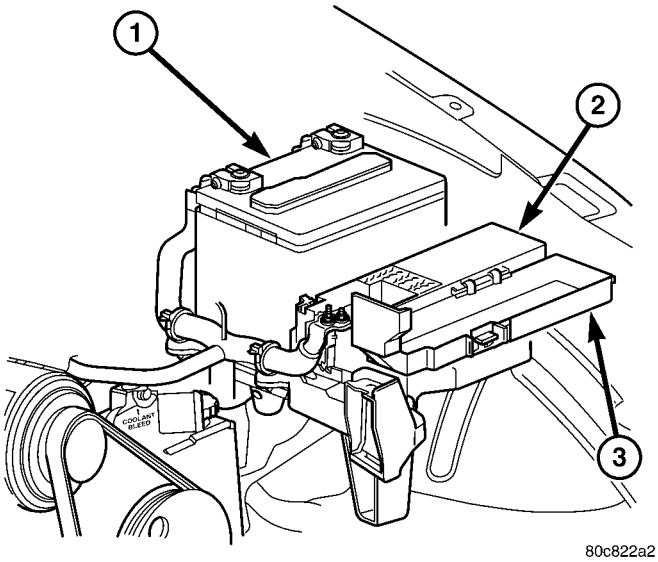

Fig. 14 POWER DISTRIBUTION CENTER (PDC)

1 - BATTERY
2 - PDC
3 - PDC COVER

HEATED SYSTEMS

TABLE OF CONTENTS

page

HEATED GLASS 1
HEATED MIRRORS 7
HEATED SEAT SYSTEM 8

HEATED GLASS

TABLE OF CONTENTS

page

HEATED GLASS
DESCRIPTION 1
OPERATION 2
DIAGNOSIS AND TESTING
ELECTRIC BACKLIGHT (EBL) SYSTEM 2
REAR WINDOW DEFOGGER RELAY
DESCRIPTION 3
OPERATION 3
REMOVAL 4
INSTALLATION 4
REAR WINDOW DEFOGGER SWITCH
DESCRIPTION 4
OPERATION 5
DIAGNOSIS AND TESTING
REAR WINDOW DEFOGGER SWITCH 5
HEATED GLASS
STANDARD PROCEDURE
GRID LINE AND TERMINAL REPAIR 5

HEATED GLASS

DESCRIPTION

CAUTION: Grid lines can be damaged or scraped off with sharp instruments. Care should be taken in cleaning glass or removing foreign materials, decals or stickers. Normal glass cleaning solvents or hot water used with rags or toweling is recommended.

The rear window defogger system, also known as electric backlight (EBL), consists of two vertical bus bars linked by a series of grid lines fired onto the inside surface of the rear window (Fig. 1).

The EBL system is turned On or Off by a switch in the A/C-heater control located at the center of the instrument panel and by a timing circuit integral to the body control module (BCM).

Circuit protection is provided by two cartridge fuses. The fuse located in the junction block (JB) is for the control circuit and the fuse located in the power distribution center (PDC) is for the heated grid circuit.

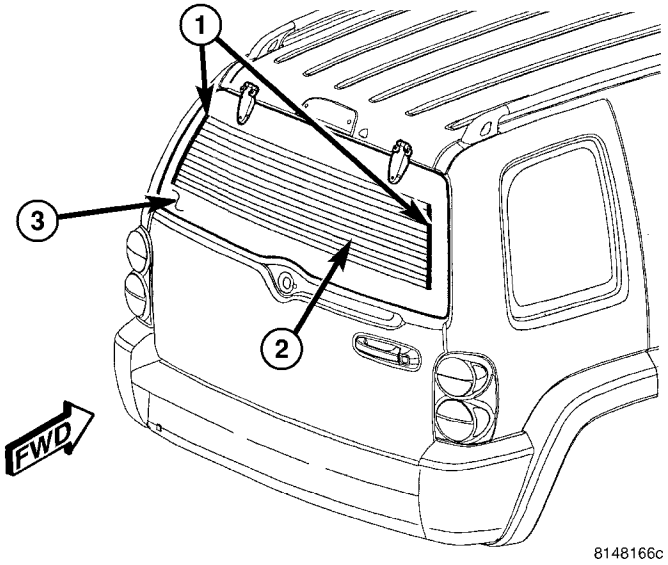

Fig. 1 Rear Window Defogger (EBL) Grid

1 - VERTICAL BUS BARS
2 - GRID LINES
3 - REAR WINDOW GLASS

HEATED GLASS (Continued)

OPERATION

The electric backlight (EBL) system is controlled by a momentary switch (Fig. 2) located in the A/C-heater control on the instrument panel. When the rear window defogger switch is pressed to the On position, the body control module (BCM) energizes the rear window defogger (EBL) relay, which then directs fused battery current through the relay and to the rear defogger grid lines and the heated side view mirrors, when equipped. The grid lines heat the glass to help clear the rear window and side mirror surfaces of fog or frost.

An amber indicator in the rear window defogger switch will illuminate to indicate when the EBL system is turned on. The BCM contains the EBL system control circuitry including the timer logic.

NOTE: The EBL system turns off automatically after ten minutes of initial operation. Each following activation cycle of the EBL system will last five minutes.

The EBL system will be automatically turned off after an initial programmed time interval of about ten minutes. After the initial time interval has expired, if the rear window defogger switch is turned on again during the same ignition cycle, the EBL system will automatically turn off after about five minutes. The EBL system will automatically shut off if the ignition switch is turned to the Off position, or it can be turned off manually by pressing the rear window defogger switch a second time.

Repair of the rear window defogger grid lines, bus bars, terminals or pigtail wires can be accomplished using the Mopar Rear Window Defogger Repair Kit (Part Number 04549275) or equivalent (Refer to 8 - ELECTRICAL/HEATED GLASS/REAR WINDOW DEFOGGER GRID - STANDARD PROCEDURE - GRID LINE AND TERMINAL REPAIR).

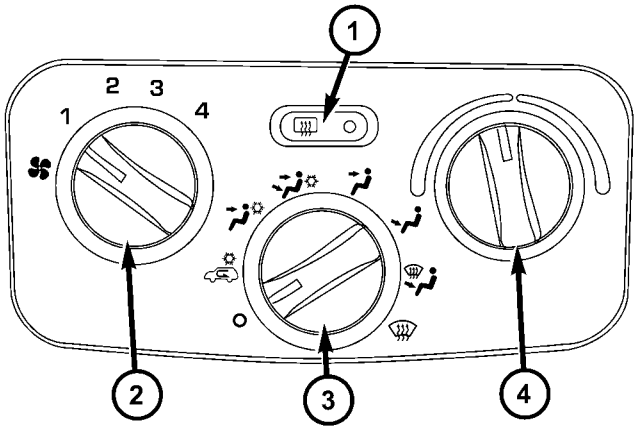

Fig. 2 Rear Window Defogger Switch

1 - REAR WINDOW DEFOGGER SWITCH
2 - BLOWER SPEED CONTROL
3 - MODE SELECT CONTROL
4 - TEMPERATURE SELECT CONTROL

DIAGNOSIS AND TESTING

ELECTRIC BACKLIGHT (EBL) SYSTEM

NOTE: Illumination of the defogger switch indicator lamp does not necessary mean that electrical current is reaching the rear glass heating grid lines.

NOTE: For circuit descriptions and diagrams of the rear window defogger (EBL) system, refer to 8W - WIRING DIAGRAM INFORMATION.

Operation of the electric backlight (EBL) system can be confirmed by the following:

(1) Use a DRBIII® scan tool and check for diagnostic trouble codes (DTCs) related to the body control module (BCM). If no DTCs are found, go to Step 2. If any DTCs are found, repair as required, then proceed to Step 2

(2) Turn the ignition switch to the On position. Set the rear window defogger switch in the On position. The rear window defogger operation can be checked by feeling the surfaces of the rear window glass or outside rear view mirror glass. A distinct difference in temperature between the grid lines and the adjacent clear glass or the mirror glass should be detected within three to four minutes of operation.

(3) If a temperature difference is not detected, use a 12-volt DC voltmeter and contact the rear glass heating grid power feed terminal A with the positive lead, and the ground terminal B with the negative lead (Fig. 3). The voltmeter should read battery voltage. If the voltmeter does not read battery voltage, check the following:

- Confirm that the ignition switch is On.
- Make sure that the rear glass heating grid feed wire and ground wire are connected to the terminals. Confirm that the ground wire has continuity to ground.
- Check the EBL relay and fuse located in the junction block (JB) in the passenger compartment. Check the fuse in the power distribution center (PDC) located in the engine compartment. The relay

HEATED GLASS (Continued)

and fuses must be tight in their receptacles and all electrical connections must be secure. Refer to the appropriate wiring information for diagnosis and testing of the ISO-standard relay.

When the above steps have been completed and the rear glass heating grid is still inoperative, one or more of the following is faulty:

- Rear window defogger switch in the A/C-heater control.
- Rear window defogger timing circuitry in the body control module (BCM).
- Rear window defogger grid lines (all grid lines would have to be broken, or the power feed or the ground wire disconnected, for the entire heating grid to be inoperative).

(4) If the EBL system operation has been verified but the rear window defogger LED indicator does not illuminate, check fuse 29 in the JB. If the fuse is OK, replace the A/C-heater control (Refer to 24 - HEATING & AIR CONDITIONING/CONTROLS/A/C HEATER CONTROL - REMOVAL).

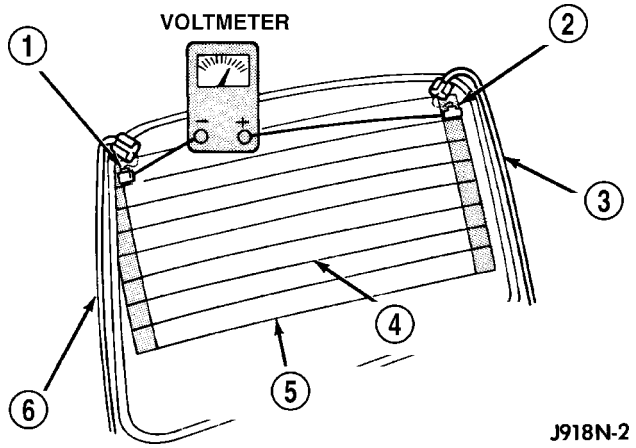

Fig. 3 REAR WINDOW GLASS GRID TEST (typical)

1 - TERMINAL “B”
2 - TERMINAL “A”
3 - FEED WIRE
4 - MID-POINT “C” (TYPICAL)
5 - HEATED REAR WINDOW DEFOGGER GRID
6 - GROUND WIRE

REAR WINDOW DEFOGGER RELAY

DESCRIPTION

The rear window defogger (EBL) relay (Fig. 4) is a International Standards Organization (ISO)-type relay. Relays conforming to the ISO specifications have common physical dimensions, current capacities, terminal functions and patterns. The EBL relay is a electromechanical device that switches battery current through a fuse in the power distribution center (PDC) to the rear window defogger grid and to the outside mirror heating grids, when equipped. The EBL relay is energized when the relay coil is provided a ground path by the control circuitry within the body control module (BCM).

The EBL relay is located in the junction block (JB) in the passenger compartment.

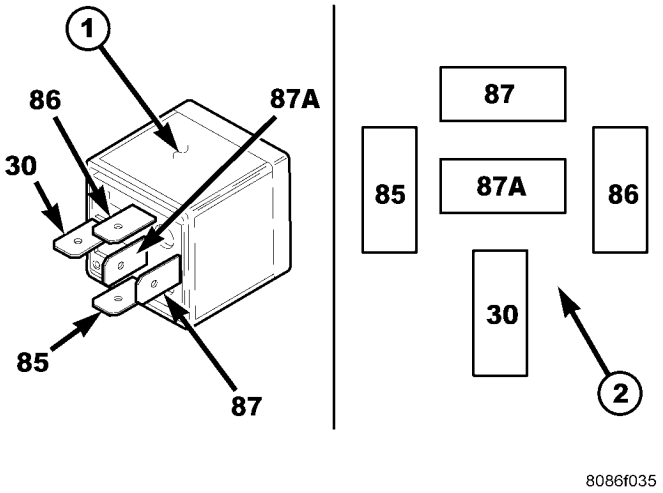

Fig. 4 Rear Window Defogger (EBL) Relay

30 - COMMON FEED
85 - COIL GROUND
86 - COIL BATTERY
87 - NORMALLY OPEN
87A - NORMALLY CLOSED

OPERATION

The ISO-standard rear window defogger (EBL) relay is an electromechanical switch that uses a low current input controlled by the body control module (BCM) to control the high current output to the rear window defogger grid lines The movable, common feed relay contact is held against the fixed, normally closed relay contact by spring pressure. When the electromagnetic relay coil is energized, it draws the movable common feed relay contact away from the fixed, normally closed relay contact and, holds it against the fixed, normally open relay contact. This action allows high current to flow to the rear window defogger grid lines.

When the relay coil is de-energized, spring pressure returns the movable relay contact back against the fixed, normally closed contact point. The resistor or diode is connected in parallel with the relay coil, and helps to dissipate voltage spikes and electromagnetic interference that can be generated as the electromagnetic field of the relay coil collapses.

The EBL relay cannot be repaired and, if faulty or damaged, it must be replaced. Refer to the appropriate wiring information for diagnosis and testing of the ISO-standard relay and for complete rear window defogger (EBL) wiring diagrams.

REAR WINDOW DEFOGGER RELAY (Continued)

REMOVAL

WARNING: On vehicles equipped with airbags, disable the airbag system before attempting any steering wheel, steering column, or instrument panel component diagnosis or service. Disconnect and isolate the battery negative (ground) cable, then wait two minutes for the airbag system capacitor to discharge before performing further diagnosis or service. This is the only sure way to disable the airbag system. Failure to take the proper precautions could result in an accidental airbag deployment and possible personal injury or death.

(1) Disconnect and isolate the negative battery cable.

(2) Remove the cover from the junction block (JB) (Fig. 5) located in the passenger compartment.

NOTE: Refer to the fuse and relay layout map on the inside of the JB cover for EBL relay location.

(3) Remove the EBL relay from the JB.

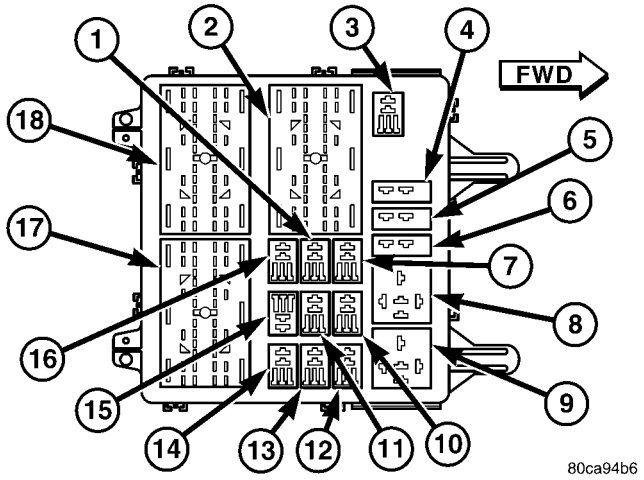

Fig. 5 Junction Block - Inboard Side (LHD Shown - Rotate 180° for RHD)

1 - PASSENGER DOOR UNLOCK RELAY
2 - JB C3 CONNECTOR RECEPTACLE
3 - LOW BEAM RELAY
4 - CIRCUIT BREAKER #1
5 - CIRCUIT BREAKER #2
6 - CIRCUIT BREAKER #3
7 - DOOR LOCK RELAY
8 - REAR WINDOW DEFOGGER RELAY
9 - SPARE
10 - FRONT FOG LAMP RELAY
11 - HORN RELAY
12 - SPARE
13 - SPARE
14 - REAR FOG LAMP RELAY
15 - PARK LAMP RELAY
16 - DRIVER DOOR UNLOCK RELAY
17 - JB C1 CONNECTOR RECEPTACLE
18 - JB C2 CONNECTOR RECEPTACLE

INSTALLATION

NOTE: Refer to the fuse and relay layout map on the inside of the junction block (JB) cover for EBL relay location.

(1) Position the EBL relay into the proper receptacle of the JB.

(2) Align the EBL relay terminals with the terminal cavities in the JB receptacle and push down firmly on the relay until the terminals are fully seated.

(3) Install the cover onto the JB.

(4) Reconnect the negative battery cable.

REAR WINDOW DEFOGGER SWITCH

DESCRIPTION

The switch for the rear window defogger (EBL) system is integrated into the A/C-heater control (Fig. 6), which is located in the center of the instrument panel. When the rear window defogger switch is activated, the A/C-heater control requests the body control module (BCM) to operate the rear window defogger (EBL) relay.

When the EBL relay is activated, current is directed to the rear defogger grid lines and the heated side view mirrors (if equipped). The grid lines heat the glass to help clear the surface of fog or frost.

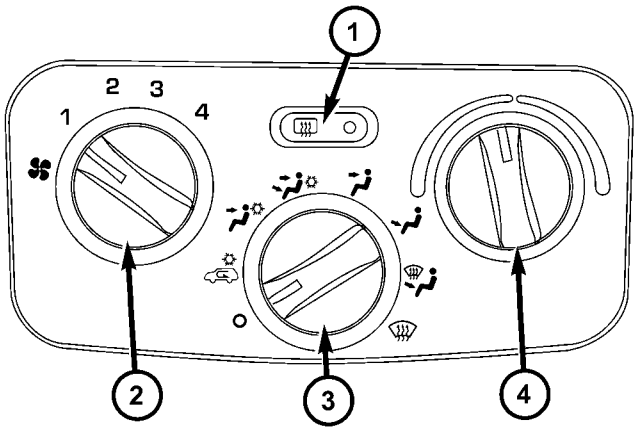

Fig. 6 Rear Window Defogger Switch

1 - REAR WINDOW DEFOGGER SWITCH
2 - BLOWER SPEED CONTROL
3 - MODE SELECT CONTROL
4 - TEMPERATURE SELECT CONTROL

REAR WINDOW DEFOGGER SWITCH (Continued)

OPERATION

An LED indicator will illuminate when the rear window defogger switch is activated. When the switch is activated, it energizes the timing circuit integral to the body control module (BCM), which then activates the rear window defogger (EBL) relay. The EBL relay controls the current flow to the grids of the rear window defogger and to the heated side view mirrors, when equipped.

NOTE: The EBL system turns off automatically after 10 minutes of initial operation. Each following activation cycle of the EBL system will last five minutes.

The EBL system will initially be on for approximately ten minutes or until the rear window defogger switch or the ignition switch is turned off. After the initial time interval has expired, if the defogger switch is turned On again during the same ignition cycle, the EBL system will automatically turn off after about five minutes.

The rear window defogger switch and the rear window defogger LED indicator cannot be repaired and, if faulty or damaged, the A/C-heater control must be replaced (Refer to 24 - HEATING & AIR CONDITIONING/CONTROLS/CONTROL-A/C HEATER - REMOVAL).

DIAGNOSIS AND TESTING

REAR WINDOW DEFOGGER SWITCH

The rear window defogger switch and timer circuit may be tested in the vehicle with or without the DRB III® scan tool.

TESTING WITH SCAN TOOL

Using a DRB III® scan tool, refer to the proper Body Diagnostic Procedures Manual.

TESTING WITHOUT SCAN TOOL

NOTE: For circuit descriptions and diagrams of the rear window defogger (EBL) system, refer to 8W - WIRING DIAGRAM INFORMATION.

(1) Remove the A/C-heater control from the instrument panel.

(2) Using a ohmmeter, check for continuity between the ground circuit cavity of the defogger switch wire harness connector and a good ground. There should be continuity. If OK, go to Step 3. If not OK, repair the open circuit as required.

(3) Check for continuity between the ground circuit terminal and the rear window defogger relay output terminal on the back of the A/C-heater control (Fig. 7). There should be momentary continuity as the defogger switch is pressed, and then no continuity. If OK, (Refer to 8 - ELECTRICAL/HEATED GLASS - DIAGNOSIS AND TESTING). If not OK, replace the faulty A/C-heater control.

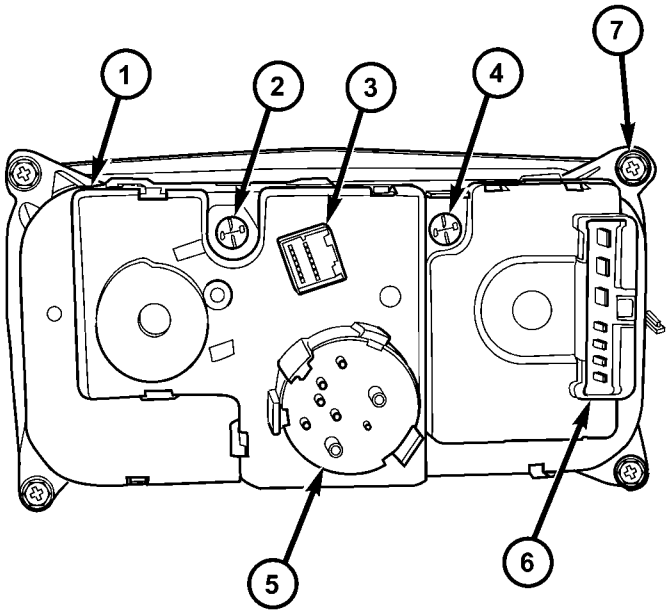

Fig. 7 A/C Heater Control - Rear View

1 - A/C-HEATER CONTROL
2 - ILLUMINATION LAMP
3 - REAR DEFOGGER/BLEND DOOR CONNECTOR
4 - ILLUMINATION LAMP
5 - VACUUM MODE SELECT CONTROL
6 - BLOWER SPEED CONTROL CONNECTOR
7 - MOUNTING SCREW LOCATIONS (4)

HEATED GLASS

STANDARD PROCEDURE

GRID LINE AND TERMINAL REPAIR

WARNING: Materials contained in the Repair Kit (Part Number 04549275) may cause skin or eye irritation. The kit contains epoxy resin and amine type hardener, which are harmful if swallowed. Avoid contact with the skin and eyes. For skin contact, wash the affected areas with soap and water. For contact with the eyes, flush with plenty of water. Do not take internally. If taken internally, induce vomiting and call a physician immediately. Use with adequate ventilation. Do not use near fire or flame. Contains flammable solvents. Keep out of the reach of children. Failure to follow the warnings could result in possible personal injury or death.

HEATED GLASS (Continued)

Repair of the rear glass heating grid lines, bus bars or terminals can be accomplished using the Mopar® Rear Window Defogger Repair Kit (Part Number 04549275) or equivalent.

(1) Mask the repair area with masking tape so that the conductive epoxy can be applied neatly (Fig. 8). Extend the epoxy application onto the grid line or the bus bar on each side of the break.

(2) Follow the instructions in the repair kit for preparing the damaged area.

(3) Remove the package separator clamp and mix the two conductive epoxy components thoroughly within the packaging. Fold the package in half and cut the center corner to dispense the epoxy.

(4) For grid line repairs, mask the area to be repaired with masking tape or use a template.

(5) Apply the epoxy through the slit in the masking tape or template. Overlap both ends of the break by at least 19 millimeters (0.75 inch).

(6) For a terminal replacement, mask the adjacent areas so the epoxy can be extended onto the adjacent grid line as well as the bus bar. Apply a thin layer of epoxy to the area where the terminal was fastened and onto the adjacent grid line.

(7) Apply a thin layer of conductive epoxy to the terminal and place it in the proper location on the bus bar. To prevent the terminal from moving while the epoxy is curing, it must be wedged or clamped.

(8) Carefully remove the masking tape or template.

CAUTION: Do not allow the glass surface to exceed 204° C (400° F) or the glass may fracture.

(9) Allow the epoxy to cure 24 hours at room temperature, or carefully use a heat gun for fifteen minutes. When using a heat gun, hold it approximately 25.4 centimeters (10 inches) from the repair and do not allow the glass surface to exceed 204° C (400° F).

NOTE: Do not attach the wire harness connectors to the terminals until the curing process is complete.

(10) After the conductive epoxy is properly cured, remove the wedge or clamp from the terminal.

(11) Connect the wire harness leads to the grid terminals and verify EBL operation.

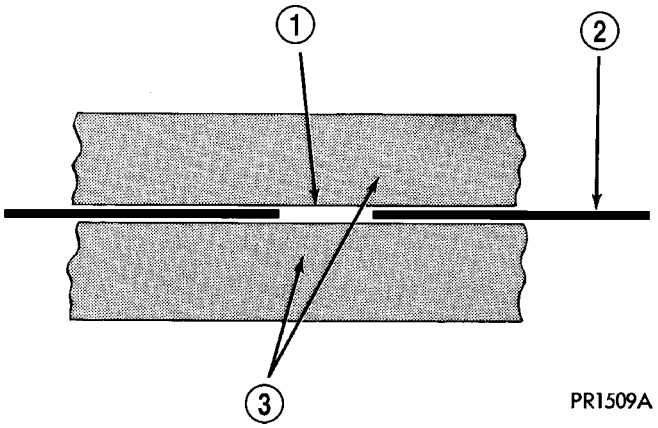

Fig. 8 Grid Line Repair

1 - BREAK
2 - GRID LINE
3 - MASKING TAPE

HEATED MIRRORS

TABLE OF CONTENTS

	page
HEATED MIRRORS	
DESCRIPTION	7
OPERATION	7

HEATED MIRRORS

DESCRIPTION

The optional heated mirror system is controlled by the momentary rear window defogger switch which is integral to the A/C-heater control (Fig. 1). An amber indicator lamp in the switch will illuminate to indicate when the rear window defogger (EBL) system is turned on.

The heated mirror system only operates in concert with the EBL system, and will be automatically shut off after a programmed time interval of about 10 minutes. After the initial time interval has expired, if the defogger switch is turned on again during the same ignition cycle, the heated mirror system will automatically shut off after about 5 minutes.

The heated mirror system will automatically shut off if the ignition switch is turned to the Off position, or it can be shut off manually by pressing the rear window defogger switch a second time.

OPERATION

When the rear window defogger switch is pressed, the rear window defogger (EBL) system becomes activated and an electric heater grid located behind the glass of each of the outside rear view mirrors is energized. When energized, each of these heater grids produce heat to help clear the outside rear view mirrors of ice, snow, or fog.

If the outside mirror heating grids are both inoperative, refer to 8 - ELECTRICAL/HEATED GLASS - DIAGNOSIS AND TESTING in this group. If only one of the outside mirror heating grids is inoperative, refer to 8 - ELECTRICAL/POWER MIRRORS - DIAGNOSIS AND TESTING.

The heating grid behind each outside mirror glass cannot be repaired and, if faulty or damaged, the entire power mirror assembly must be replaced.

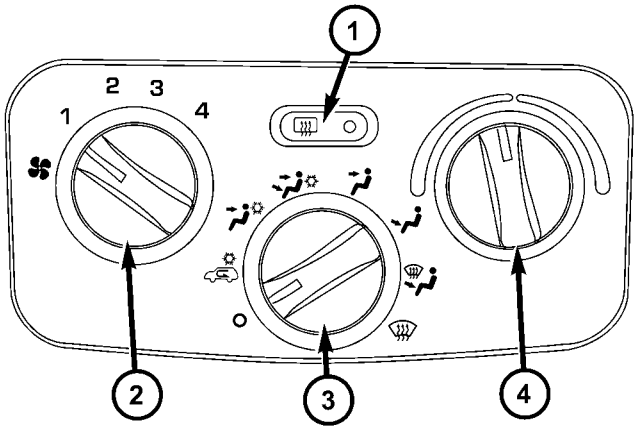

80c62f2e

Fig. 1 Rear Window Defogger Switch

1 - REAR WINDOW DEFOGGER SWITCH
2 - BLOWER SPEED CONTROL
3 - MODE SELECT CONTROL
4 - TEMPERATURE SELECT CONTROL

HEATED SEAT SYSTEM

TABLE OF CONTENTS

page

HEATED SEAT SYSTEM
DESCRIPTION 8
OPERATION 8
DIAGNOSIS AND TESTING - HEATED SEAT SYSTEM 9
DRIVER HEATED SEAT SWITCH
DESCRIPTION 9
OPERATION 9
DIAGNOSIS AND TESTING - DRIVER HEATED SEAT SWITCH 10
REMOVAL 10
INSTALLATION 11
PASSENGER HEATED SEAT SWITCH
DESCRIPTION 11
OPERATION 11
DIAGNOSIS AND TESTING - PASSENGER HEATED SEAT SWITCH 11
REMOVAL 12
INSTALLATION 12
HEATED SEAT ELEMENT
DESCRIPTION 12
OPERATION 12
DIAGNOSIS AND TESTING - HEATED SEAT ELEMENT 12
HEATED SEAT SENSOR
DESCRIPTION 13
OPERATION 13
DIAGNOSIS AND TESTING - HEATED SEAT SENSOR 13
REMOVAL 13

HEATED SEAT SYSTEM

DESCRIPTION

Individually controlled electrically heated front seats are available on models that are also equipped with the optional leather trim package. Vehicles with this option can be visually identified by the two separate heated seat switches mounted on the outboard seat cushion side shields. The heated seat system allows the front seat driver and passenger to select from two different levels of supplemental electrical seat heating, or no seat heating to suit their individual comfort requirements. The heated seat system for this vehicle includes the following major components:

- **Heated Seat Switches** - Two heated seat switches are used per vehicle, including two Light-Emitting Diode (LED) indicator lamps and an incandescent back lighting bulb for each switch. One switch for the driver and one for the passenger front seats. The switches are mounted on the outboard seat cushion side shields.
- **Heated Seat Module** - also referred to as the Seat Heat Interface Module (SHIM), this module contains the solid state electronic control and diagnostic logic circuitry for the heated seat system. One heated seat module is used per vehicle and is mounted under the left front seat cushion. Refer to the Electronic Control Modules section of the service manual for heated seat module information.
- **Heated Seat Elements** - Four heated seat elements are used per vehicle, one for each front seat back and one for each front seat cushion. The elements are integral to the individual front seat and seat back cushions and cannot be removed from the cushions, once installed at the factory.
- **Heated Seat Sensors** - Two heated seat sensors are used per vehicle, one for each front seat. The sensors are integral to the individual front seat heating elements.

Following are general descriptions of the major components in the heated seat system. See the owner's manual in the vehicle glove box for more information on the features, use and operation of the heated seat system. Refer to **Wiring Diagrams** for the location of complete heated seat system wiring diagrams.

OPERATION

The heated seat module receives fused battery current through fuse #29 in the Junction Block (JB) when the ignition switch is in the “ON” position. The heated seat switches receive battery current through fuse #25 in the Junction Block also, when the ignition switch is in the “ON” position. The heated seat module shares a common ground circuit with each of the heated seat elements. The heated seat elements will only operate when the surface temperature of the seat cushion is below the designed temperature set points of the system.

The heated seat system will also be turned off automatically whenever the ignition switch is turned to any position except On. If the ignition switch is turned to the Off position while a heated seat is turned ON, the heated seat will remain Off after the

HEATED SEAT SYSTEM (Continued)

ignition switch is turned back “ON” until a heated seat switch is depressed again.

The heated seat module monitors inputs from the heated seat sensors and the heated seat switches. In response to these inputs the heated seat module uses its internal programming to control outputs to the heated seat elements in both front seats and to control the heated seat LED indicator lamps located in both of the heated seat switches. The heated seat module is also programmed to provide self-diagnostic capability. When the module detects certain failures within the heated seat system, it will provide a visual indication of the failure by flashing the indicator lamps in the affected heated seat switch. The heated seat module will automatically turn off the heated seat elements if it detects a short or open in the heated seat element circuit or a heated seat sensor value that is out of range.

DIAGNOSIS AND TESTING - HEATED SEAT SYSTEM

HEATED SEAT SYSTEM SELF-DIAGNOSIS

The heated seat system is capable of performing some self-diagnostics. The following table depicts the various monitored failures which will be reported to the vehicle operator or technician by flashing the individual heated seat switch Light Emitting Diode (LED) indicator lamps. Refer to the Heated Seat System Self-Diagnosis table for failure identification. The driver side heated seat switch indicator lamps will flash if a failure occurs in the driver side heated seat, and the passenger side heated seat switch indicator lamps will flash for a passenger side heated seat failure. If a monitored heated seat system failure occurs, the switch indicator lamps will flash at a pulse rate of about one-half second on, followed by about one-half second off for a duration of about one minute after the switch for the faulty heated seat is depressed in either the Low or High direction. This process will repeat every time the faulty heated seat switch is actuated until the problem has been corrected.

Heated Seat System Self-Diagnosis		
Monitored Failure	Switch High Indicator Lamp	Switch Low Indicator Lamp
Heated Seat Element Shorted	Flashing	Flashing
Heated Seat Element Open	Flashing	Off
Heated Seat Sensor Value Out of Range	Off	Flashing

If the heated seat system failure is identified by flashing heated seat switch indicator lamps, go to the appropriate diagnosis and testing procedure in this section and confirm the condition, using the step by step procedure. If the monitored failure is confirmed, replace the component. If the monitored failure is not confirmed, replace the heated seat module with a known good unit and retest the system.

HEATED SEAT SYSTEM TESTING

Refer to **Wiring Diagrams** for the location of complete heated seat system wiring diagrams. Before testing the individual components in the heated seat system, perform the following preliminary checks:

- If a single indicator lamp for one heated seat switch does not operate and the heated seat elements do heat, refer to **Diagnosis and Testing the Heated Seat Switch** in this section for the location of heated seat switch diagnosis and testing procedures.
- If both indicator lamps for a heated seat switch operate, but the heated seat elements do not heat, refer to **Diagnosis and Testing the Heated Seat Module** in Electronic Control Modules for the location of heated seat module diagnosis and testing procedures.
- If an indicator lamp on either heated seat switch remains illuminated after the heated seat has been turned Off, refer to **Diagnosis and Testing the Heated Seat Module** in Electronic Control Modules for the location of heated seat module diagnosis and testing procedures. Also refer to the Body Diagnostic Manual for additional diagnosis and testing procedures.

DRIVER HEATED SEAT SWITCH

DESCRIPTION

The heated seat switches are located on the outboard cushion side shield of the driver and passenger front seats. The two, three-position rocker type switches provide a resistor multiplexed signal to the Heated Seat Module through separate hard wired circuits. Each switch has an Off, Low and High setting. Each switch contains two light emitting diodes (LED), one for each High and Low setting to let the occupant know that the seat heater system is on.

The heated seat switches and their LED’s cannot be repaired. If either switch is faulty or damaged the entire switch must be replaced.

OPERATION

There are three positions that can be selected with each of the heated seat switches: Off, Low, and High.

DRIVER HEATED SEAT SWITCH (Continued)

When the front of the switch rocker is fully depressed, the High position is selected and the high position LED indicator illuminates. When the rear of the switch rocker is fully depressed, the Low position is selected and the low position LED indicator illuminates. When the switch rocker is depressed a second time in either direction, Off is selected and both LED indicators are extinguished.

Both switches provide separate resistor multiplexed hard wire inputs to the Heated Seat Module to indicate the selected switch position. The heated seat module monitors the switch inputs and responds to the heated seat switch status messages by controlling the output to the seat heater elements of the selected seat. The Low heat position set point is about 36° C (97° F), and the High heat position set point is about 41° C (105° F).

DIAGNOSIS AND TESTING - DRIVER HEATED SEAT SWITCH

If a heated seat fails to heat and one or both of the indicator lamps on a heated seat switch flash, refer to **Heated Seat System Diagnosis and Testing** in this section for flashing LED failure identification. Refer to **Wiring Diagrams** for complete heated seat system wiring diagrams.

(1) If the problem being diagnosed involves a heated seat switch indicator lamp that remains illuminated after the heated seat has been turned Off, refer to **Diagnosis and Testing the Heated Seat Module** in the Electronic Control Modules section for heated seat module diagnosis and testing procedures. If not, go to Step 2

(2) Remove the heated seat switch (Refer to 8 - ELECTRICAL/HEATED SEATS/DRIVER HEATED SEAT SWITCH - REMOVAL). Check for continuity between the ground circuit cavity #5 of the heated seat switch connector and a good ground. There should be continuity. If OK, go to Step 3. If not OK, repair the open ground circuit as required.

(3) Turn the ignition switch to the ON position. Check for battery voltage at the fused ignition switch output circuit cavity #1 of the heated seat switch connector. If OK, go to Step 4. If not OK, repair the open fused ignition switch output circuit as required.

(4) Check the continuity between pin #1 and pin #3 of the heated seat switch (Fig. 1). If the readings do not correspond to those in the Heated Seat Switch Continuity table below, replace the heated seat switch. If OK, and the heated seat system is still not operating properly refer to **Diagnosis and Testing the Heated Seat Module**.

NOTE: Any resistance values (ohms Ω) given in the following text are supplied using the automatic range generated by a fluke® automotive meter. If another type of measuring device is used, the values generated may not be the same as the results shown here, or may have to be converted to the range used here.

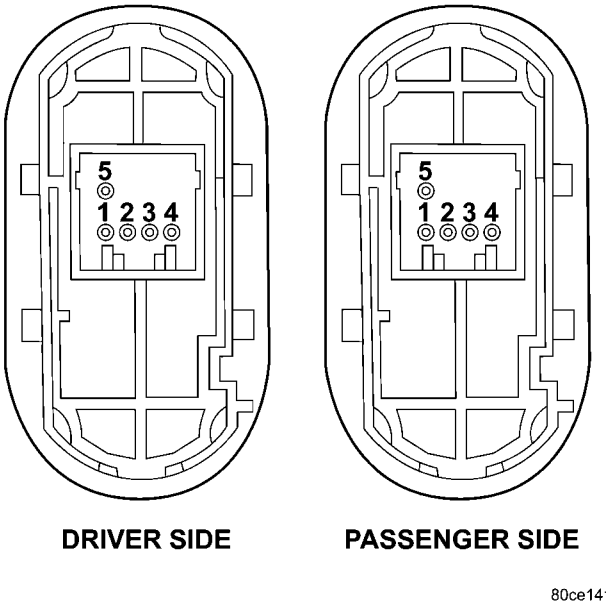

Fig. 1 Rear View of Heated Seat Switches

TESTING HEATED SEAT SWITCH CONTINUITY

CONTINUITY BETWEEN	SWITCH POSITION	OHMS READING +/– 10%
PIN 1 AND 3	OFF	2.2 K (2200) OHMS
PIN 1 AND 3	LO	.415 K (415) OHMS
PIN 1 AND 3	HI	33 OHMS

REMOVAL

(1) Disconnect and isolate the negative battery cable.

(2) Remove the appropriate seat cushion side shield (Refer to 23 - BODY/SEATS/SEAT CUSHION SIDE COVERS - REMOVAL).

(3) Disconnect the heated seat switch electrical connector. Depress the locking tab and pull straight apart.

(4) Working from the underside of the switch, gently rock the switch back and forth out of its mounting location.

DRIVER HEATED SEAT SWITCH (Continued)

INSTALLATION

(1) Gently rock the switch back and forth in to its mounting location.

(2) Connect the heated seat switch electrical connector.

(3) Install the appropriate seat cushion side shield. Refer to the Body section of the service manual for the procedure.

(4) Connect the negative battery cable.

PASSENGER HEATED SEAT SWITCH

DESCRIPTION

The heated seat switches are located on the outboard cushion side shield of the driver and passenger front seats. The two, three-position rocker type switches provide a resistor multiplexed signal to the Heated Seat Module through separate hard wired circuits. Each switch has an Off, Low and High setting. Each switch contains two light emitting diodes (LED), one for each High and Low setting to let the occupant know that the seat heater system is on.

The heated seat switches and their LED's cannot be repaired. If either switch is faulty or damaged the entire switch must be replaced.

OPERATION

There are three positions that can be selected with each of the heated seat switches: Off, Low, and High. When the front of the switch rocker is fully depressed, the High position is selected and the high position LED indicator illuminates. When the rear of the switch rocker is fully depressed, the Low position is selected and the low position LED indicator illuminates. When the switch rocker is depressed a second time in either direction, Off is selected and both LED indicators are extinguished.

Both switches provide separate resistor multiplexed hard wire inputs to the Heated Seat Module to indicate the selected switch position. The heated seat module monitors the switch inputs and responds to the heated seat switch status messages by controlling the output to the seat heater elements of the selected seat. The Low heat position set point is about 36° C (97° F), and the High heat position set point is about 41° C (105° F).

DIAGNOSIS AND TESTING - PASSENGER HEATED SEAT SWITCH

If a heated seat fails to heat and one or both of the indicator lamps on a heated seat switch flash, refer to **Heated Seat System Diagnosis and Testing** in this section for flashing LED failure identification. Refer to **Wiring Diagrams** for complete heated seat system wiring diagrams.

(1) If the problem being diagnosed involves a heated seat switch indicator lamp that remains illuminated after the heated seat has been turned Off, refer to **Diagnosis and Testing the Heated Seat Module** in the Electronic Control Modules section for heated seat module diagnosis and testing procedures. If not, go to Step 2

(2) Remove the heated seat switch (Refer to 8 - ELECTRICAL/HEATED SEATS/DRIVER HEATED SEAT SWITCH - REMOVAL). Check for continuity between the ground circuit cavity #5 of the heated seat switch connector and a good ground. There should be continuity. If OK, go to Step 3. If not OK, repair the open ground circuit as required.

(3) Turn the ignition switch to the ON position. Check for battery voltage at the fused ignition switch output circuit cavity #1 of the heated seat switch connector. If OK, go to Step 4. If not OK, repair the open fused ignition switch output circuit as required.

(4) Check the continuity between pin #1 and pin #3 of the heated seat switch (Fig. 2). If the readings do not correspond to those in the Heated Seat Switch Continuity table below, replace the heated seat switch. If OK, and the heated seat system is still not operating properly refer to **Diagnosis and Testing the Heated Seat Module** .

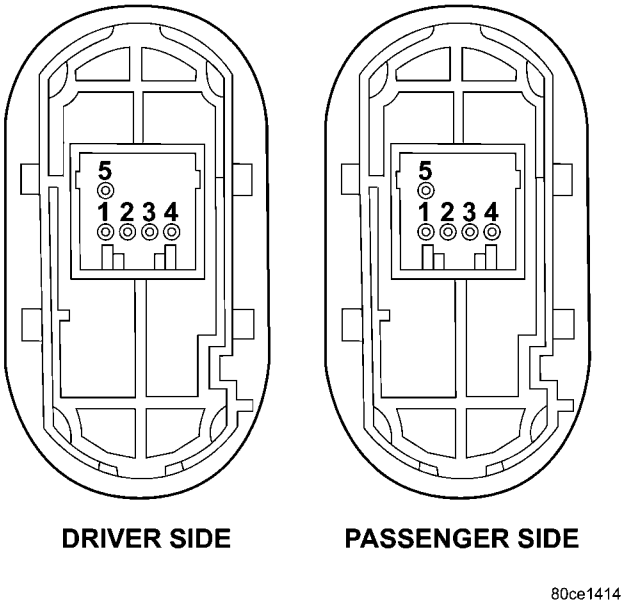

Fig. 2 Heated Seat Switch

PASSENGER HEATED SEAT SWITCH (Continued)

NOTE: Any resistance values (ohms Ω) given in the following text are supplied using the automatic range generated by a fluke® automotive meter. If another type of measuring device is used, the values generated may not be the same as the results shown here, or may have to be converted to the range used here.

TESTING HEATED SEAT SWITCH CONTINUITY

CONTINUITY BETWEEN	SWITCH POSITION	OHMS READING +/– 10%
PIN 1 AND 3	OFF	2.2 K (2200) OHMS
PIN 1 AND 3	LO	.415 K (415) OHMS
PIN 1 AND 3	HI	33 OHMS

REMOVAL

(1) Disconnect and isolate the negative battery cable.

(2) Remove the appropriate seat cushion side shield (Refer to 23 - BODY/SEATS/SEAT CUSHION SIDE COVERS - REMOVAL).

(3) Disconnect the heated seat switch electrical connector. Depress the locking tab and pull straight apart.

(4) Working from the underside of the switch, gently rock the switch back and forth out of its mounting location.

INSTALLATION

(1) Gently rock the switch back and forth in to its mounting location.

(2) Connect the heated seat switch electrical connector.

(3) Install the appropriate seat cushion side shield. Refer to the Body section of the service manual for the procedure.

(4) Connect the negative battery cable.

HEATED SEAT ELEMENT

DESCRIPTION

The heated seat system includes four seat heating elements. Two are located in each front seat, one for the seat cushion and the other for the seat back. All models use two resistor wire heating elements for each seat that are connected in series with the Heated Seat Module (HSM). The temperature sensor is a Negative Temperature Coefficient (NTC) thermistor. One temperature sensor is used for each seat, and it is located on the seat cushion heating element for all models.

The seat heating elements are permanently attached to the seat cushions. The heated seat elements and the temperature sensor cannot be adjusted or repaired and, if faulty or damaged, the seat cushions must be replaced. Refer to the Body section for the seat cushion service procedures.

OPERATION

The heated seat elements resist the flow of electrical current. When battery current is passed through the elements, the energy lost by the resistance of the elements to the current flow is released in the form of heat. When the temperature of the seat cushion cover rises, the resistance of the sensor decreases. The Heated Seat Module supplies a five-volt current to one side of each sensor, and monitors the voltage drop through the sensor on a return circuit. The Heated Seat Module uses this temperature sensor input to monitor the temperature of the seat, and regulates the current flow to the seat heating elements accordingly.

DIAGNOSIS AND TESTING - HEATED SEAT ELEMENT

SEAT CUSHION ELEMENT

NOTE: When checking heated seat elements for continuity, be certain to move the heating element being checked. Moving the element, such as siting in the seat will eliminate the possibility of an intermittent open in the element which would only be evident if the element was in a certain position. Failure to check the element in various positions could result in an incomplete test.

(1) Disconnect and isolate the battery negative cable. Disconnect the green heated seat cushion element wire harness connector from the power seat wire harness. The power seat wire harness connectors for the seat cushion heating elements are secured to a bracket located under the seat cushion frame. Refer to **Wiring** for connector pin information.

(2) Check for continuity between the two heated seat element circuit cavities. There should be continuity. If OK, the elements within the seat assembly test OK, go to Step 3. If not OK, replace the faulty seat heating element and cushion assembly.

(3) Test the seat wire harness between the heated seat module connector and the heated seat wire harness element connector for a shorted or open circuit. If OK, element is OK, proceed with testing the heated seat sensor and module. If not OK, repair the shorted or open seat wire harness as required.

HEATED SEAT ELEMENT (Continued)

SEAT BACK ELEMENT

(1) Disconnect and isolate the battery negative cable. Disconnect the green heated seat back element wire harness connector from the power seat wire harness. The power seat wire harness connectors for the seat cushion heating elements are secured to a bracket located under the seat cushion frame. Refer to **Wiring** for connector pin information.

(2) Check for continuity between the two heated seat element circuit cavities. There should be continuity. If OK, the elements within the seat assembly test OK, go to Step 3. If not OK, replace the faulty seat heating element and cushion assembly.

(3) Test the seat wire harness between the heated seat module connector and the heated seat wire harness element connector for a shorted or open circuit. If OK, element is OK, proceed with testing the heated seat sensor and module. If not OK, repair the shorted or open seat wire harness as required.

HEATED SEAT SENSOR

DESCRIPTION

The heated seat temperature sensor is a Negative Temperature Coefficient (NTC) thermistor. One temperature sensor is used for each seat. This temperature sensor is located in the seat cushion heating element on all models.

The heated seat temperature sensor cannot be repaired or adjusted and must be replaced if defective. The heated seat cushion element must be replaced if the temperature sensor is defective. Refer to the procedure in this section of the service manual.

OPERATION

When the temperature of the seat cushion cover rises, the resistance of the sensor decreases. The heated seat module supplies five-volts to one side of each sensor, and monitors the voltage drop through the sensor on a return circuit. The heated seat module uses this temperature sensor input to monitor the temperature of the seat, and regulates the current flow to the seat heating elements accordingly.

DIAGNOSIS AND TESTING - HEATED SEAT SENSOR

For complete circuit diagrams, refer to **WIRING**.

NOTE: Any resistance values (ohms Ω) given in the following text are supplied using the automatic range generated by a fluke® automotive meter. If another type of measuring device is used the values generated may not be the same as the results shown here, or may have to be converted to the range used here.

(1) Position the driver seat in the full rearward position.

(2) Unclip the heated seat module from the bottom of the drivers seat cushion pan.

(3) Back-probe the heated seat module wire harness connector, do not disconnect. Check cavity (#7 for passenger, #8 for driver seat) for a range in voltage from approx. 1.72 – 3.0 volts. It should be within this range, If OK check the heated seat element. If NOT OK, check for the proper 5 volt supply to the heated seat sensor, from the module. Refer to Wiring for specific information. If 5 volts is not being supplied to the sensor from the module, replace the heated seat module.

(4) Test the seat wire harness between the heated seat module connector and the heated seat wire harness connector for shorted or open circuits. If OK, refer to **Diagnosis and Testing the Heated Seat Module** in Electronic Control Modules, for the proper heated seat module diagnosis and testing procedures. If not OK, repair the shorted or open heated seat wire harness as required.

REMOVAL

(1) For heated seat sensor replacement procedure (Refer to 8 - ELECTRICAL/HEATED SEATS/ HEATED SEAT ELEMENT - REMOVAL).

HORN

TABLE OF CONTENTS

page

HORN SYSTEM
DESCRIPTION 1
OPERATION 1
DIAGNOSIS AND TESTING - HORN SYSTEM . . . 1
HORN
DIAGNOSIS AND TESTING - HORN 2
REMOVAL 2
INSTALLATION 2
HORN RELAY
REMOVAL 2
INSTALLATION 3
HORN SWITCH
DESCRIPTION 3
DIAGNOSIS AND TESTING - HORN SWITCH . . . 3

HORN SYSTEM

DESCRIPTION

The dual-note horn system features dual electromagnetic horn units. The horn system includes the following major components:

- **Horn** - The two horns are located below the Power Distribution Center (PDC).
- **Horn Relay** - The horn relay is located in the Junction Block (JB).
- **Horn Switch** - The horn switch is molded into the driver airbag assembly.

OPERATION

The horn system operates on battery current received through fuse 3 in the Junction Block (JB). The horn system circuit is designed so that the system will remain operational, regardless of the ignition switch position.

DIAGNOSIS AND TESTING - HORN SYSTEM

In most cases, any problem involving continually sounding horns can be quickly alleviated by removing the horn relay from the Junction Block (JB).

WARNING: DISABLE THE AIRBAG SYSTEM BEFORE ATTEMPTING ANY STEERING WHEEL, STEERING COLUMN, SEAT BELT TENSIONER, SIDE AIRBAG, OR INSTRUMENT PANEL COMPONENT DIAGNOSIS OR SERVICE. DISCONNECT AND ISOLATE THE BATTERY NEGATIVE (GROUND) CABLE, THEN WAIT TWO MINUTES FOR THE AIRBAG SYSTEM CAPACITOR TO DISCHARGE BEFORE PERFORMING FURTHER DIAGNOSIS OR SERVICE. THIS IS THE ONLY SURE WAY TO DISABLE THE AIRBAG SYSTEM. FAILURE TO TAKE THE PROPER PRECAUTIONS COULD RESULT IN ACCIDENTAL AIRBAG DEPLOYMENT AND POSSIBLE PERSONAL INJURY.

HORN SYSTEM DIAGNOSIS TABLE

CONDITION	POSSIBLE CAUSES	CORRECTION
BOTH HORNS INOPERATIVE	1. Faulty fuse.	1. Check the fuse in the Junction Block (JB). Replace the fuse and repair the shorted circuit or component, if required.
	2. Faulty horn relay.	2. Refer to horn relay for the proper diagnosis and testing procedures. Replace the horn relay or repair the open horn relay circuit, if required.
	3. Faulty horn switch.	3. Refer to horn switch for the proper diagnosis and testing procedure. Replace the horn switch or repair the open horn switch circuit, if required.
	4. Faulty horns.	4. Refer to horn for the proper diagnosis and testing procedure. Replace the horns or repair the open horn circuit, if required.

HORN SYSTEM (Continued)

CONDITION	POSSIBLE CAUSES	CORRECTION
ONE HORN INOPERATIVE	1. Faulty horn.	1. Refer to horn for the proper diagnosis and testing procedures. Replace the horn or repair the open horn circuit, if required.
HORN SOUNDS CONTINUOUSLY	1. Faulty horn relay.	1. Refer to horn relay for the proper diagnosis and testing procedure. Replace the horn relay or repair the shorted horn relay control circuit, if required.
	2. Faulty horn switch.	2. Refer to horn switch for the proper diagnosis and testing procedure. Replace the horn switch or repair the shorted horn switch circuit, if required.

HORN

DIAGNOSIS AND TESTING - HORN

WARNING: DISABLE THE AIRBAG SYSTEM BEFORE ATTEMPTING ANY STEERING WHEEL, STEERING COLUMN, SEAT BELT TENSIONER, SIDE AIRBAG, OR INSTRUMENT PANEL COMPONENT DIAGNOSIS OR SERVICE. DISCONNECT AND ISOLATE THE BATTERY NEGATIVE (GROUND) CABLE, THEN WAIT TWO MINUTES FOR THE AIRBAG SYSTEM CAPACITOR TO DISCHARGE BEFORE PERFORMING FURTHER DIAGNOSIS OR SERVICE. THIS IS THE ONLY SURE WAY TO DISABLE THE AIRBAG SYSTEM. FAILURE TO TAKE THE PROPER PRECAUTIONS COULD RESULT IN ACCIDENTAL AIRBAG DEPLOYMENT AND POSSIBLE PERSONAL INJURY.

Refer to the appropriate wiring information.

(1) Disconnect the wire harness connector from the horn. Measure the resistance between the horn ground circuit cavity of the wire harness connector and a good ground. There should be no measurable resistance. If OK, go to Step 2. If not OK, replace wiring as necessary.

(2) Check for battery voltage at the horn relay output circuit cavity of the wire harness connector for the horn. There should be zero volts. If OK, go to Step 3. If not OK, check horn relay.

(3) Depress the horn switch. There should now be battery voltage at the horn relay output circuit cavity of the wire harness connector for the horn. If OK, but the horn does not sound, replace the faulty horn. If not OK, check horn relay and horn relay circuit.

REMOVAL

(1) Disconnect and isolate the battery negative cable.

(2) Disconnect the electrical harness connector from the horns.

(3) Remove the mounting bolt (Fig. 1).

(4) Remove the horns.

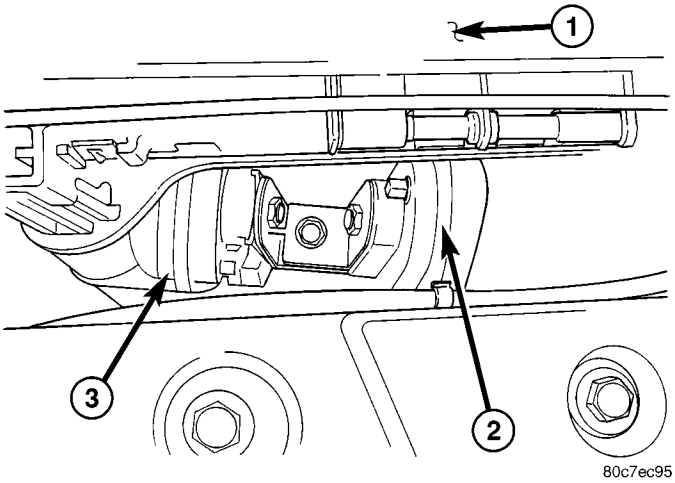

Fig. 1 HORN MOUNTING

1 - POWER DISTRIBUTION CENTER
2 - LOW NOTE HORN
3 - HIGH NOTE HORN

INSTALLATION

(1) Install the horns.

(2) Install the mounting bolt. Tighten bolt to 25 N·m (19 lb. ft.).

(3) Connect the electrical harness connector to the horns

(4) Connect the battery negative cable.

HORN RELAY

REMOVAL

(1) Disconnect and isolate the battery negative cable.

(2) Remove the instrument panel end cap.

(3) Locate and pull the horn relay from the Junction Block (JB).

HORN RELAY (Continued)

INSTALLATION

(1) Locate proper connector, and press relay into position.

(2) Install instrument panel end cap.

(3) Connect battery negative cable.

HORN SWITCH

DESCRIPTION

The horn switch is molded into the driver airbag. The horn switch can not be serviced separately. For service procedures, (Refer to 8 - ELECTRICAL/RESTRAINTS/DRIVER AIRBAG - REMOVAL).

DIAGNOSIS AND TESTING - HORN SWITCH

For complete circuit diagrams, refer to the appropriate wiring information.

WARNING: DISABLE THE AIRBAG SYSTEM BEFORE ATTEMPTING ANY STEERING WHEEL, STEERING COLUMN, SEAT BELT TENSIONER, SIDE AIRBAG, OR INSTRUMENT PANEL COMPONENT DIAGNOSIS OR SERVICE. DISCONNECT AND ISOLATE THE BATTERY NEGATIVE (GROUND) CABLE, THEN WAIT TWO MINUTES FOR THE AIRBAG SYSTEM CAPACITOR TO DISCHARGE BEFORE PERFORMING FURTHER DIAGNOSIS OR SERVICE. THIS IS THE ONLY SURE WAY TO DISABLE THE AIRBAG SYSTEM. FAILURE TO TAKE THE PROPER PRECAUTIONS COULD RESULT IN ACCIDENTAL AIRBAG DEPLOYMENT AND POSSIBLE PERSONAL INJURY.

(1) Disconnect and isolate the battery negative cable.

(2) Remove the steering column opening cover.

(3) Check for continuity between the metal steering column jacket and a good ground. There should be continuity. If OK, go to Step 4. If not OK,(Refer to 19 - STEERING/COLUMN - INSTALLATION) for proper installation of the steering column.

(4) Remove the driver side airbag module from the steering wheel (Refer to 8 - ELECTRICAL/RESTRAINTS/DRIVER AIRBAG - REMOVAL). Disconnect the horn switch wire harness connectors from the driver side airbag module (Fig. 2).

(5) Remove the horn relay from the Junction Block (JB). Check for continuity between the steering column half of the horn switch feed wire harness connector and a good ground. There should be no continuity. If OK, go to Step 6. If not OK, repair the shorted horn relay control circuit to the horn relay in the Junction Block as required.

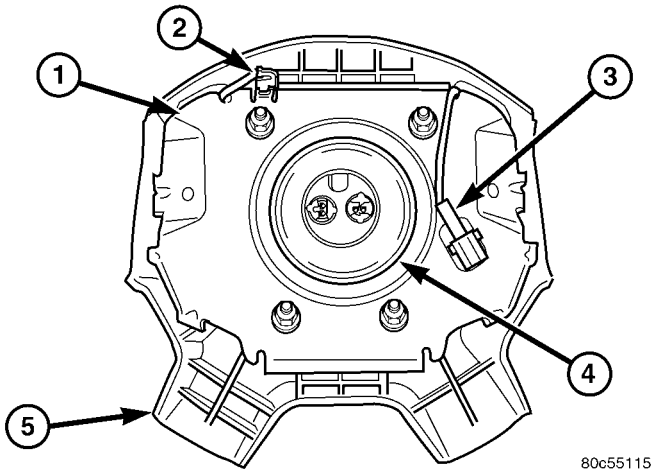

Fig. 2 Driver Airbag Housing

1 - HOUSING
2 - HORN SWITCH GROUND WIRE
3 - HORN SWITCH FEED WIRE
4 - INFLATOR
5 - TRIM COVER

(6) Check for continuity between the steering column half of the horn switch feed wire harness connector and the horn relay control circuit cavity for the horn relay in the Junction Block. There should be continuity. If OK, go to Step 7. If not OK, repair the open horn relay control circuit to the horn relay in the Junction Block as required.

(7) Check for continuity between the horn switch feed wire and the horn switch ground wire on the driver side airbag module. There should be no continuity. If OK, go to Step 8. If not OK, replace the faulty horn switch.

(8) Depress the center of the driver side airbag module trim cover and check for continuity between the horn switch feed wire and the horn switch ground wire on the driver side airbag module. There should now be continuity. If not OK, replace the faulty horn switch (Refer to 8 - ELECTRICAL/RESTRAINTS/DRIVER AIRBAG - REMOVAL).

IGNITION CONTROL

TABLE OF CONTENTS

	page
IGNITION CONTROL	
DESCRIPTION	1
OPERATION	1
SPECIFICATIONS	
SPECIFICATIONS - IGNITION TIMING	2
ENGINE FIRING ORDER - 2.4L 4-CYLINDER	2
ENGINE FIRING ORDER - 3.7L V-6	2
IGNITION COIL RESISTANCE - 2.4L	2
IGNITION COIL RESISTANCE - 3.7L V-6	2
SPARK PLUGS	3
SPARK PLUG CABLE RESISTANCE - 2.4L	3
TORQUE - IGNITION SYSTEM	3
AUTO SHUT DOWN RELAY	
DESCRIPTION - PCM OUTPUT	4
OPERATION	
OPERATION - ASD SENSE - PCM INPUT	4
OPERATION - PCM OUTPUT	4
DIAGNOSIS AND TESTING - ASD AND FUEL PUMP RELAYS	4
REMOVAL	5
INSTALLATION	5
CAMSHAFT POSITION SENSOR	
DESCRIPTION	
2.4L	5
3.7L	6
2.8L TURBODIESEL	6
OPERATION	
2.4L	7
3.7L	7
2.8L TURBODIESEL	7
REMOVAL	
GAS ENGINES	8
2.8L TURBODIESEL	8
INSTALLATION	
GAS ENGINES	9
2.8L TURBODIESEL	10
GLOW PLUG	
DESCRIPTION	10
OPERATION	10
REMOVAL	11
INSTALLATION	11
GLOW PLUG MODULE	
DESCRIPTION	12
OPERATION	12
REMOVAL	13
INSTALLATION	13
IGNITION COIL	
DESCRIPTION	13
OPERATION	13
REMOVAL	14
INSTALLATION	15
KNOCK SENSOR	
DESCRIPTION	15
OPERATION	15
REMOVAL	16
INSTALLATION	16
SPARK PLUG	
DESCRIPTION	16
OPERATION	17
DIAGNOSIS AND TESTING - SPARK PLUG CONDITIONS	17
REMOVAL	19
CLEANING SPARK PLUGS	20
INSTALLATION	20
IGNITION COIL CAPACITOR	
DESCRIPTION	20
OPERATION	20
REMOVAL	20
INSTALLATION	20

IGNITION CONTROL

DESCRIPTION

The ignition system consists of:

- Spark Plugs
- Ignition Coil(s)
- Powertrain Control Module (PCM)
- Crankshaft Position Sensor
- 2 Knock Sensors (3.7L only)
- Camshaft Position Sensor
- The MAP, TPS, IAC and ECT also have an effect on the control of the ignition system.

OPERATION

2.4L

A common ignition coil divided into 2 halves is used. Secondary, high-tension spark plug cables are also used. One half of the coil fires two spark plugs simultaneously (one plug is the cylinder under compression, and the other plug is the cylinder on the exhaust stroke). Coil half number one fires cylinders 1 and 4. Coil half number two fires cylinders 2 and 3. The PCM determines which of the coils to charge and fire at the correct time.

IGNITION CONTROL (Continued)

The Auto Shutdown (ASD) relay provides battery voltage to the ignition coil. The PCM provides a ground contact (circuit) for energizing the coil. When the PCM breaks the contact, the energy in the coil primary transfers to the secondary causing a spark. The PCM will de-energize the ASD relay if it does not receive inputs from either the crankshaft or camshaft position sensors.

A distributor is not used with the 2.4L engine.

3.7L

The 3.7L V6 engine uses a separate ignition coil for each cylinder. The one-piece coil bolts directly to the cylinder head. Rubber boots seal the secondary terminal ends of the coils to the top of all 6 spark plugs. A separate electrical connector is used for each coil.

Because of coil design, spark plug cables (secondary cables) are not used. A distributor is not used with the 3.7L engine.

Two knock sensors (one for each cylinder bank) are used to help control spark knock.

The Auto Shutdown (ASD) relay provides battery voltage to each ignition coil. The Powertrain Control Module (PCM) provides a ground contact (circuit) for energizing each coil. When the PCM breaks the contact, the energy in the coil primary transfers to the secondary causing a spark. The PCM will de-energize the ASD relay if it does not receive inputs from either the crankshaft or camshaft position sensors.

SPECIFICATIONS

SPECIFICATIONS - IGNITION TIMING

Ignition timing is not adjustable on any engine.

ENGINE FIRING ORDER - 2.4L 4-CYLINDER

1 - 3 - 4 - 2. Refer to (Fig. 1).

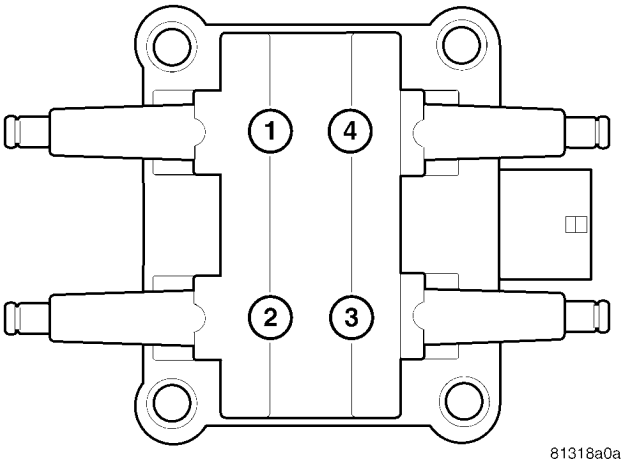

Fig. 1 FIRING ORDER - 2.4L

ENGINE FIRING ORDER - 3.7L V-6

1 - 6 - 5 - 4 - 3 - 2

IGNITION COIL RESISTANCE - 2.4L

Engine	Coil Manufacture	Primary Resistance at 21°C-27°C (70°F-80°F)	Secondary Resistance at 21°C-27°C (70°F-80°F)
2.4L	Toyodenso or Diamond	0.51 to 0.61 Ohms	11,500 to 13,500 Ohms

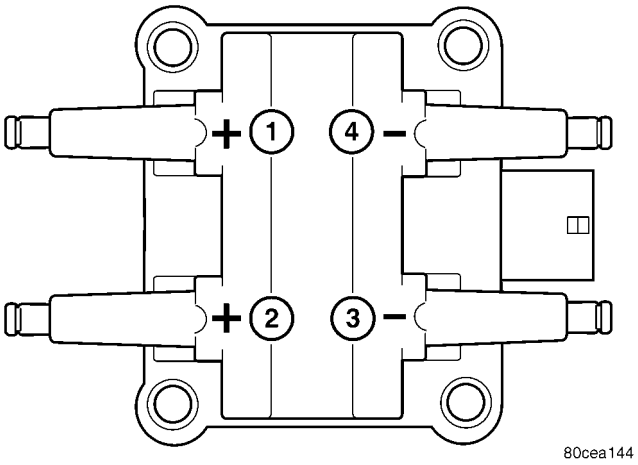

IGNITION COIL - 2.4L

IGNITION COIL RESISTANCE - 3.7L V-6

PRIMARY RESISTANCE 21-27°C (70-80°F)	SECONDARY RESISTANCE 21-27°C (70-80°F)
0.6 - 0.9 Ohms	6,000 - 9,000 Ohms

IGNITION CONTROL (Continued)

SPARK PLUGS

ENGINE	PLUG TYPE	ELECTRODE GAP
2.4L	RE16MC (Champion #)	1.24 to 1.37 mm (0.048 to 0.053 in.)
3.7L V-6	ZFR6F - 11G (NGK #)	1.1 mm (0.042 in.)

SPARK PLUG CABLE RESISTANCE - 2.4L

MINIMUM	MAXIMUM
250 Ohms Per Inch	1000 Ohms Per Inch
3000 Ohms Per Foot	12,000 Ohms Per Foot

TORQUE - IGNITION SYSTEM

DESCRIPTION	N-m	Ft. Lbs.	In. Lbs.
Camshaft Position Sensor-2.4L	23	21	205
Camshaft Position Sensor–3.7L	12	-	106
Crankshaft Position Sensor Bolt-2.4L	12	-	106
Crankshaft Position Sensor Nut/Bolt-3.7L	23	21	205
* Knock Sensor Bolt - 3.7L	* 20	* 15	
Ignition Coil Mounting Bolts - 2.4L	11	-	105
Ignition Coil Mounting Nuts - 3.7L	8	-	70
Ignition Coil Capacitor Nuts- 3.7L	8	-	70
** Spark Plugs - 2.4L	** 15	** 11	-
Spark Plugs - 3.7L	27	20	-
* Do not apply any sealant, thread-locker or adhesive to bolts. Poor sensor performance may result.			
** Torque critical tapered design. Do not exceed 15 ft. lbs.			

AUTO SHUT DOWN RELAY

DESCRIPTION - PCM OUTPUT

The 5–pin, 12–volt, Automatic Shutdown (ASD) relay is located in the Power Distribution Center (PDC). Refer to label on PDC cover for relay location.

OPERATION

OPERATION - ASD SENSE - PCM INPUT

A 12 volt signal at this input indicates to the PCM that the ASD has been activated. The relay is used to connect the oxygen sensor heater elements, oxygen sensor heater relay, ignition coil and fuel injectors to 12 volt + power supply.

This input is used only to sense that the ASD relay is energized. If the Powertrain Control Module (PCM) does not see 12 volts at this input when the ASD should be activated, it will set a Diagnostic Trouble Code (DTC).

OPERATION - PCM OUTPUT

The ASD relay supplies battery voltage (12+ volts) to the fuel injectors and ignition coil(s). With certain emissions packages it also supplies 12–volts to the oxygen sensor heating elements and the oxygen sensor heater relay.

The ground circuit for the coil within the ASD relay is controlled by the Powertrain Control Module (PCM). The PCM operates the ASD relay by switching its ground circuit on and off.

The ASD relay will be shut–down, meaning the 12–volt power supply to the ASD relay will be de-activated by the PCM if the ignition key is left in the ON position. This is if the engine has not been running for approximately 1.8 seconds.

DIAGNOSIS AND TESTING - ASD AND FUEL PUMP RELAYS

The following description of operation and tests apply only to the Automatic Shutdown (ASD) and fuel pump relays. The terminals on the bottom of each relay are numbered. Two different types of relays may be used, (Fig. 2) or (Fig. 3).

- Terminal number 30 is connected to battery voltage. For both the ASD and fuel pump relays, terminal 30 is connected to battery voltage at all times.
- The PCM grounds the coil side of the relay through terminal number 85.
- Terminal number 86 supplies voltage to the coil side of the relay.
- When the PCM de-energizes the ASD and fuel pump relays, terminal number 87A connects to terminal 30. This is the Off position. In the off position, voltage is not supplied to the rest of the circuit. Terminal 87A is the center terminal on the relay.
- When the PCM energizes the ASD and fuel pump relays, terminal 87 connects to terminal 30. This is the On position. Terminal 87 supplies voltage to the rest of the circuit.

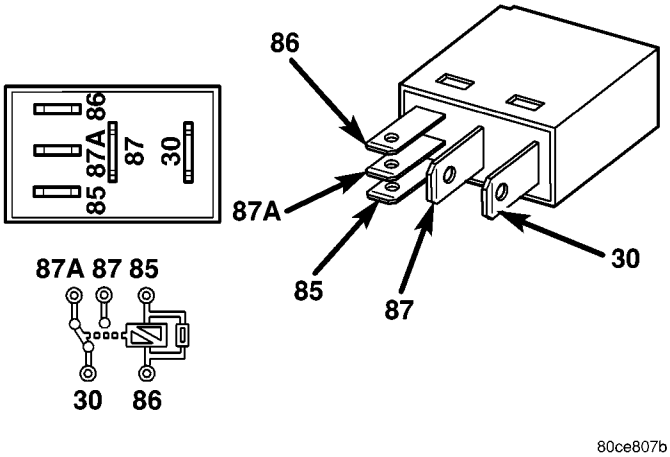

Fig. 2 TYPE 1 RELAY (ISO MICRO RELAY)

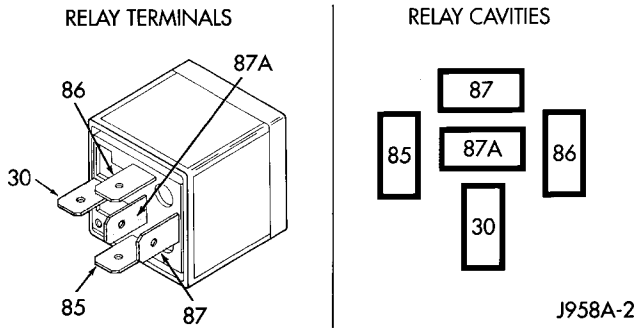

Fig. 3 ASD AND FUEL PUMP RELAY TERMINALS— TYPE 2

TERMINAL LEGEND

NUMBER	IDENTIFICATION
30	COMMON FEED
85	COIL GROUND
86	COIL BATTERY
87	NORMALLY OPEN
87A	NORMALLY CLOSED

The following procedure applies to the ASD and fuel pump relays.

(1) Remove relay from connector before testing.

(2) With the relay removed from the vehicle, use an ohmmeter to check the resistance between terminals 85 and 86. The resistance should be 75 ohms +/- 5 ohms.

(3) Connect the ohmmeter between terminals 30 and 87A. The ohmmeter should show continuity between terminals 30 and 87A.

AUTO SHUT DOWN RELAY (Continued)

(4) Connect the ohmmeter between terminals 87 and 30. The ohmmeter should not show continuity at this time.

(5) Connect one end of a jumper wire (16 gauge or smaller) to relay terminal 85. Connect the other end of the jumper wire to the ground side of a 12 volt power source.

(6) Connect one end of another jumper wire (16 gauge or smaller) to the power side of the 12 volt power source. **Do not attach the other end of the jumper wire to the relay at this time.**

WARNING: DO NOT ALLOW OHMMETER TO CONTACT TERMINALS 85 OR 86 DURING THIS TEST. DAMAGE TO OHMMETER MAY RESULT.

(7) Attach the other end of the jumper wire to relay terminal 86. This activates the relay. The ohmmeter should now show continuity between relay terminals 87 and 30. The ohmmeter should not show continuity between relay terminals 87A and 30.

(8) Disconnect jumper wires.

(9) Replace the relay if it did not pass the continuity and resistance tests. If the relay passed the tests, it operates properly. Check the remainder of the ASD and fuel pump relay circuits. Refer to 8, Wiring Diagrams.

REMOVAL

The ASD relay is located in the Power Distribution Center (PDC) (Fig. 4). Refer to label on PDC cover for relay location.

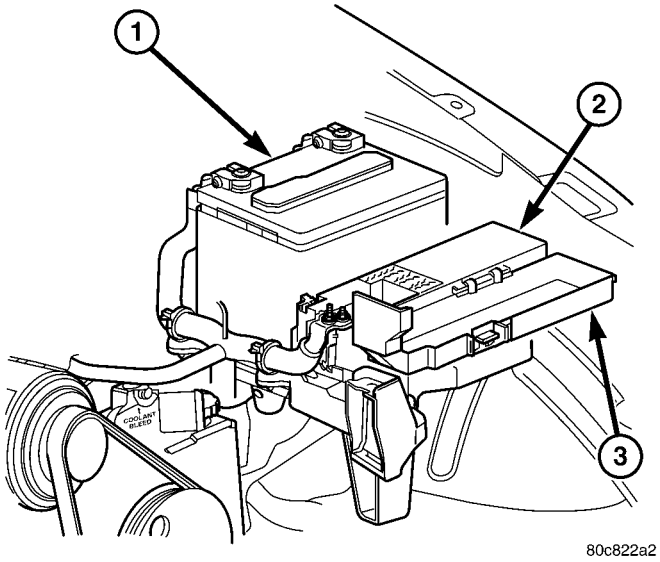

Fig. 4 POWER DISTRIBUTION CENTER (PDC)

1 - BATTERY
2 - PDC
3 - PDC COVER

(1) Remove PDC cover.

(2) Remove relay from PDC.

(3) Check condition of relay terminals and PDC connector terminals for damage or corrosion. Repair if necessary before installing relay.

(4) Check for pin height (pin height should be the same for all terminals within the PDC connector). Repair if necessary before installing relay.

INSTALLATION

The ASD relay is located in the Power Distribution Center (PDC). Refer to label on PDC cover for relay location.

(1) Install relay to PDC.

(2) Install cover to PDC.

CAMSHAFT POSITION SENSOR

DESCRIPTION

2.4L

The Camshaft Position Sensor (CMP) on the 2.4L 4–cylinder engine is bolted to the right-front side of the cylinder head (Fig. 5).

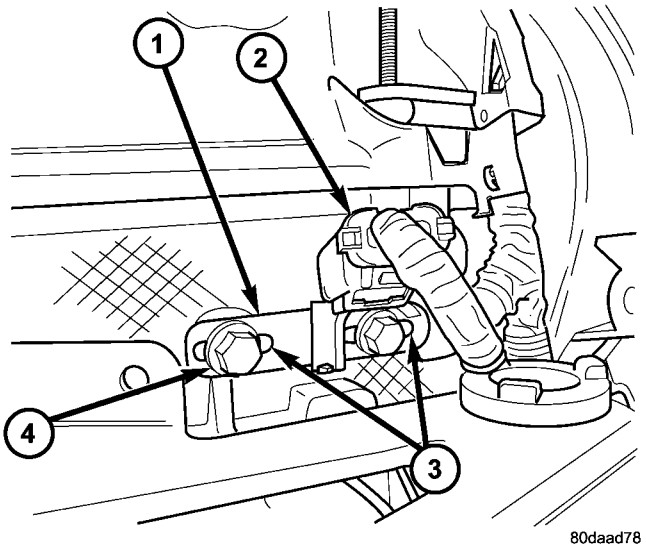

Fig. 5 CMP LOCATION - 2.4L

1 - CMP SENSOR
2 - ELECTRICAL CONNECTOR
3 - SLOTTED HOLES
4 - MOUNTING BOLTS (2)

CAMSHAFT POSITION SENSOR (Continued)

3.7L

The Camshaft Position Sensor (CMP) on the 3.7L 6–cylinder engine is bolted to the right-front side of the right cylinder head (Fig. 6).

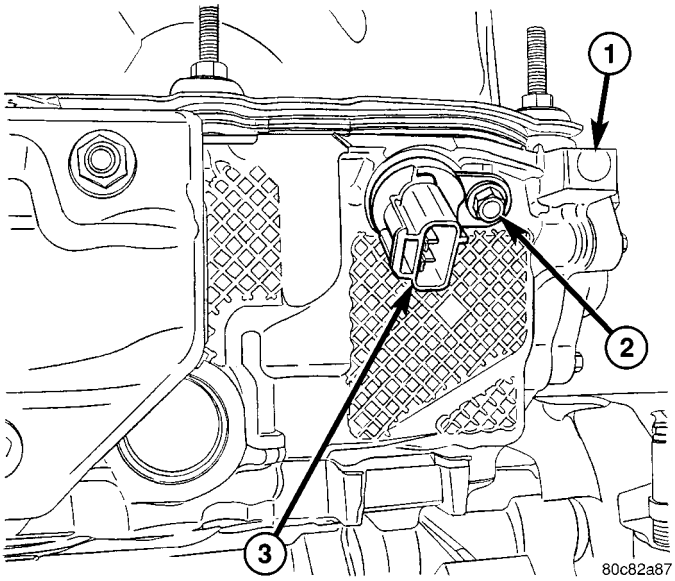

Fig. 6 CAMSHAFT POSITION SENSOR - 3.7L

1 - RIGHT/FRONT OF RIGHT CYLINDER HEAD
2 - CMP MOUNTING BOLT
3 - CMP LOCATION

2.8L TURBODIESEL

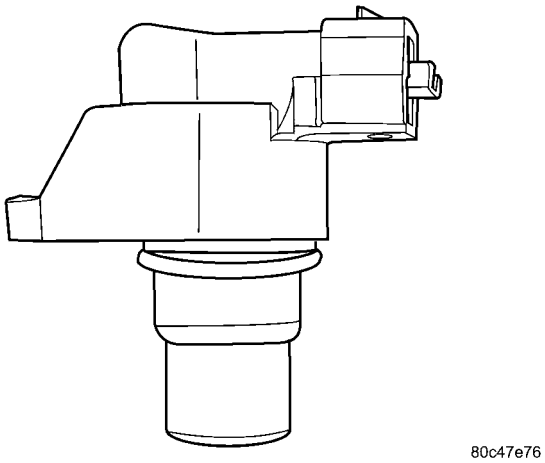

Fig. 7 CAMSHAFT POSITION SENSOR

The camshaft position (CMP) sensor is mounted in the top of cylinder head cover/intake manifold at the rear of the engine (Fig. 7) (Fig. 8) The CMP sensor is a hall effect device that detects a notch on the rear of the exhaust camshaft that allows the ECM to determine the position of cylinder number one. The engine will continue to run if the signal is lost, but will not restart after the vehicle is shut off.

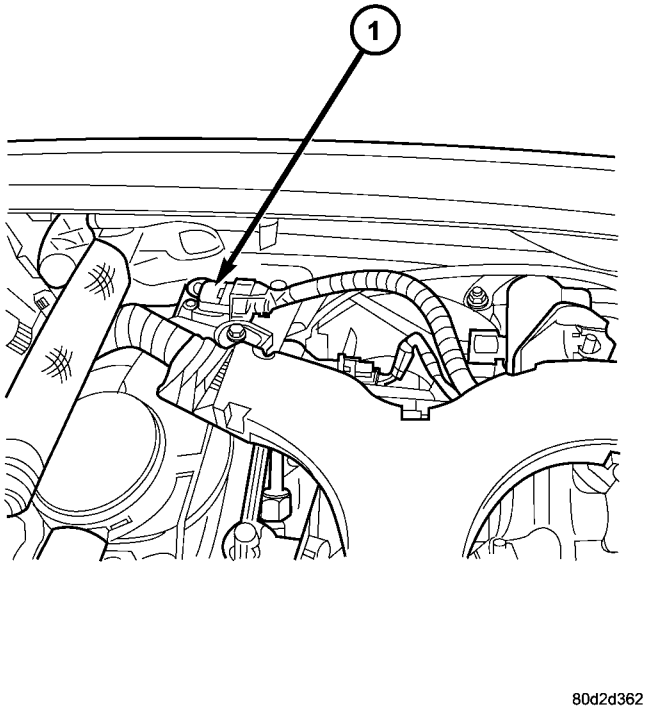

Fig. 8 CAMSHAFT POSITION (CMP) SENSOR

1 - CAMSHAFT POSITION (CMP) SENSOR

CAMSHAFT POSITION SENSOR (Continued)

OPERATION

2.4L

The Camshaft Position Sensor (CMP) sensor contains a hall effect device referred to as a sync signal generator. A rotating target wheel (tonewheel) for the CMP is located behind the exhaust valve-camshaft drive gear (Fig. 9). The target wheel is equipped with a cutout (notch) around 180 degrees of the wheel. The CMP detects this cutout every 180 degrees of camshaft gear rotation. Its signal is used in conjunction with the Crankshaft Position Sensor (CKP) to differentiate between fuel injection and spark events. It is also used to synchronize the fuel injectors with their respective cylinders.

When the leading edge of the target wheel cutout enters the tip of the CMP, the interruption of magnetic field causes the voltage to switch high, resulting in a sync signal of approximately 5 volts.

When the trailing edge of the target wheel cutout leaves the tip of the CMP, the change of the magnetic field causes the sync signal voltage to switch low to 0 volts.

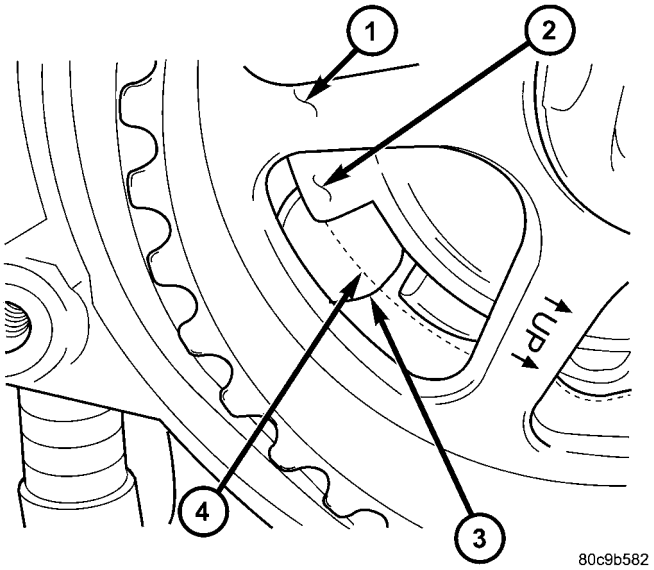

Fig. 9 CMP FACE AT TARGET WHEEL-2.4L

1 - CAMSHAFT DRIVE GEAR
2 - TARGETWHEEL (TONEWHEEL)
3 - FACE OF CMP SENSOR
4 - CUTOUT (NOTCH)

3.7L

The Camshaft Position Sensor (CMP) sensor contains a hall effect device referred to as a sync signal generator. A rotating target wheel (tonewheel) for the CMP is located at the front of the camshaft for the right cylinder head (Fig. 10). This sync signal generator detects notches located on a tonewheel. As the tonewheel rotates, the notches pass through the sync signal generator. The signal from the CMP sensor is used in conjunction with the Crankshaft Position Sensor (CKP) to differentiate between fuel injection and spark events. It is also used to synchronize the fuel injectors with their respective cylinders.

When the leading edge of the tonewheel notch enters the tip of the CMP, the interruption of magnetic field causes the voltage to switch high, resulting in a sync signal of approximately 5 volts.

When the trailing edge of the tonewheel notch leaves then tip of the CMP, the change of the magnetic field causes the sync signal voltage to switch low to 0 volts.

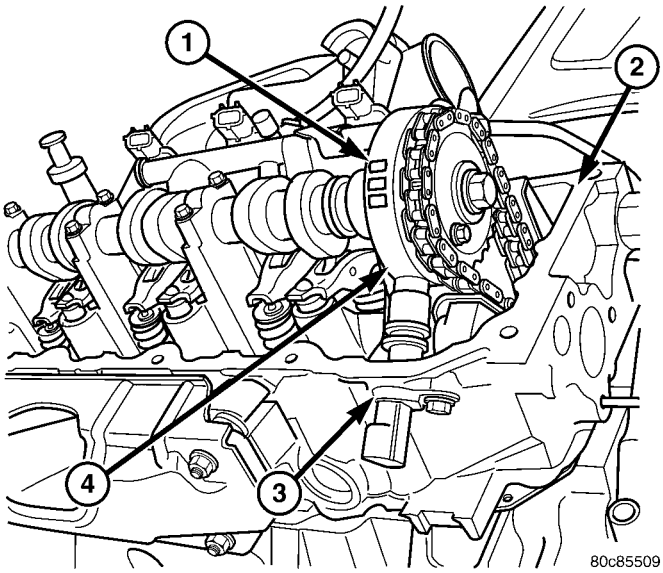

Fig. 10 CAMSHAFT POSITION SENSOR LOCATION - 3.7L

1 - NOTCHES
2 - RIGHT CYLINDER HEAD
3 - CMP
4 - TONEWHEEL (TARGET WHEEL)

2.8L TURBODIESEL

The camshaft position (CMP) sensor is a hall effect switch. A tooth made of a ferromagnetic material is attached to the camshaft. When this tooth passes the CMP sensor an electronic signal is created. This signal is then sent to the engine control module (ECM). This signal is used by the ECM to determine TDC and which cylinder has just entered its compression phase.

CAMSHAFT POSITION SENSOR (Continued)

REMOVAL

GAS ENGINES

2.4L

The Camshaft Position Sensor (CMP) on the 2.4L 4-cylinder engine is bolted to the right-front side of the cylinder head (Fig. 11). Sensor position (depth) is adjustable.

(1) Disconnect electrical connector at CMP sensor.
(2) Remove 2 sensor mounting bolts.
(3) Remove sensor from cylinder head by sliding towards rear of engine.

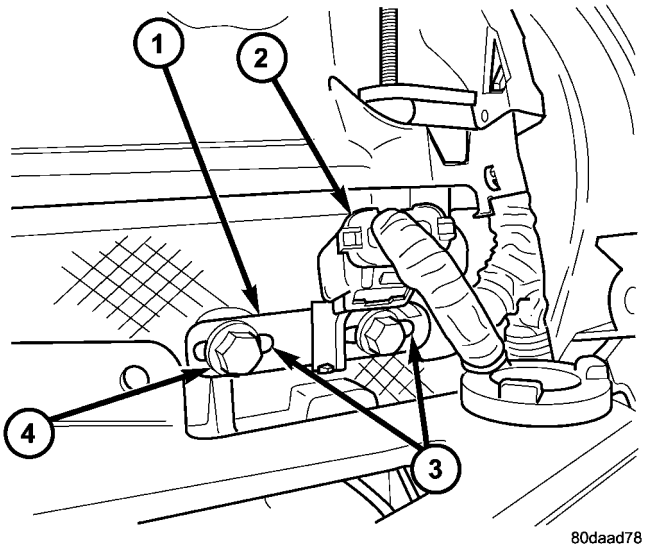

Fig. 11 CMP LOCATION - 2.4L

1 - CMP SENSOR
2 - ELECTRICAL CONNECTOR
3 - SLOTTED HOLES
4 - MOUNTING BOLTS (2)

3.7L

The Camshaft Position Sensor (CMP) on the 3.7L V-6 engine is bolted to the front/top of the right cylinder head (Fig. 12).

(1) Disconnect electrical connector at CMP sensor.
(2) Remove sensor mounting bolt (Fig. 12).
(3) Carefully twist sensor from cylinder head.
(4) Check condition of sensor o-ring.

2.8L TURBODIESEL

(1) Disconnect negative battery cable.
(2) Remove engine cover (Refer to 9 - ENGINE COVER - REMOVAL).
(3) Disconnect CMP sensor electrical connector (Fig. 13).
(4) Remove CMP sensor retaining bolt and remove sensor from cylinder head cover/intake manifold (Fig. 13).

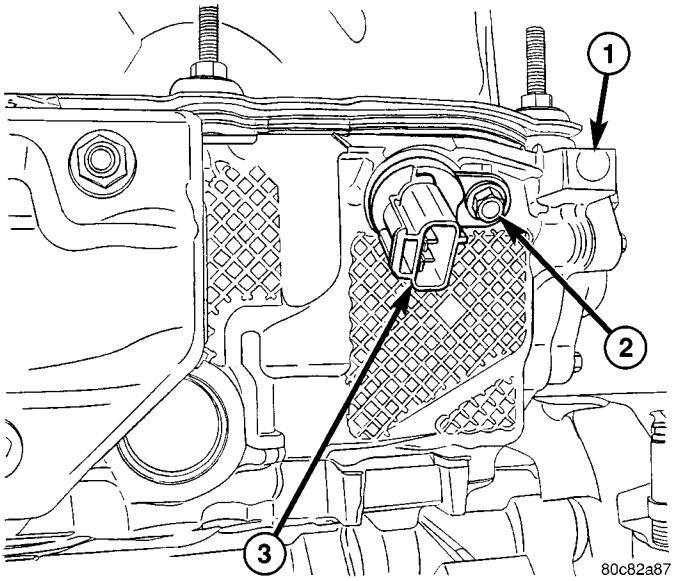

Fig. 12 CAMSHAFT POSITION SENSOR (CMP) - 3.7L

1 - RIGHT/FRONT OF RIGHT CYLINDER HEAD
2 - CMP MOUNTING BOLT
3 - CMP LOCATION

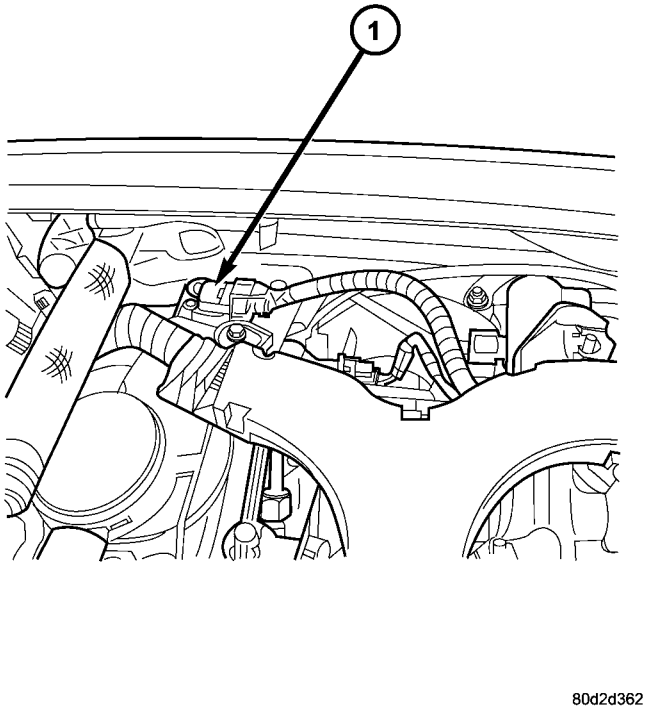

Fig. 13 CAMSHAFT POSITION (CMP) SENSOR

1 - CAMSHAFT POSITION (CMP) SENSOR

CAMSHAFT POSITION SENSOR (Continued)

INSTALLATION

GAS ENGINES

2.4L

The Camshaft Position Sensor (CMP) on the 2.4L 4-cylinder engine is bolted to the right-front side of the cylinder head. **Sensor position (depth) is adjustable.**

(1) Remove plastic, upper timing belt cover (timing gear cover) (Fig. 14) by removing 3 bolts. Before attempting to remove cover, remove electrical connector from Engine Coolant Temperature (ECT) sensor (Fig. 14). This will prevent damage to sensor.

(2) Rotate (bump over) engine until camshaft timing gear and target wheel (tonewheel) are positioned and aligned to face of sensor as shown in (Fig. 15). **If not positioned as shown in (Fig. 15), damage to both sensor and target wheel will occur when attempting to start engine. Face of sensor MUST be behind target wheel while adjusting.**

(3) Position sensor to cylinder head and install 2 sensor mounting bolts finger tight.

(4) **SENSOR AIR GAP: .030”** Set air gap between rear of target wheel and face of sensor to .030”. This can best be accomplished using an L-shaped, wire-type spark plug gapping gauge (Fig. 16). A piece of .030” brass shim stock may also be used.

(5) Gently push sensor forward until it contacts gapping gauge. **Do not push hard on sensor.** Tighten 2 sensor mounting bolts. Refer to torque specifications.

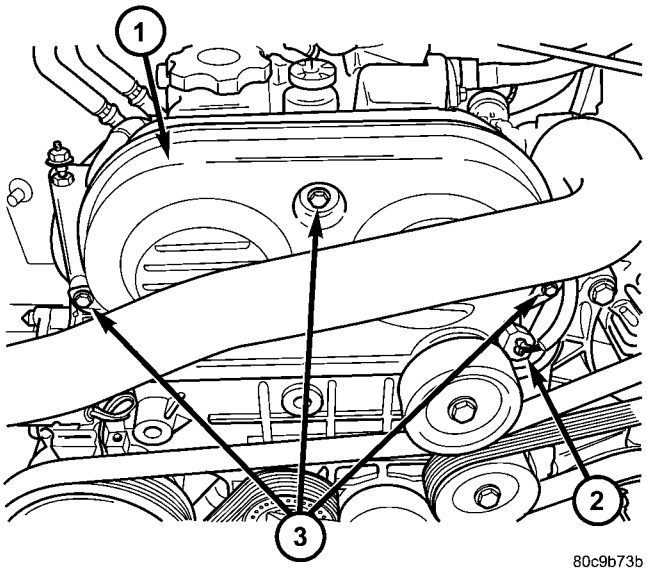

Fig. 14 UPPER TIMING BELT COVER/BOLTS-2.4L

1 - UPPER TIMING BELT COVER
2 - ELECTRICAL CONNECTOR (ECT)
3 - MOUNTING BOLTS (3)

CAUTION: After tightening sensor mounting bolts, recheck air gap and adjust as necessary. Retorque bolts.

(6) Install upper timing belt cover and 3 bolts.
(7) Connect electrical connector to ECT sensor.
(8) Connect electrical connector to CMP sensor.

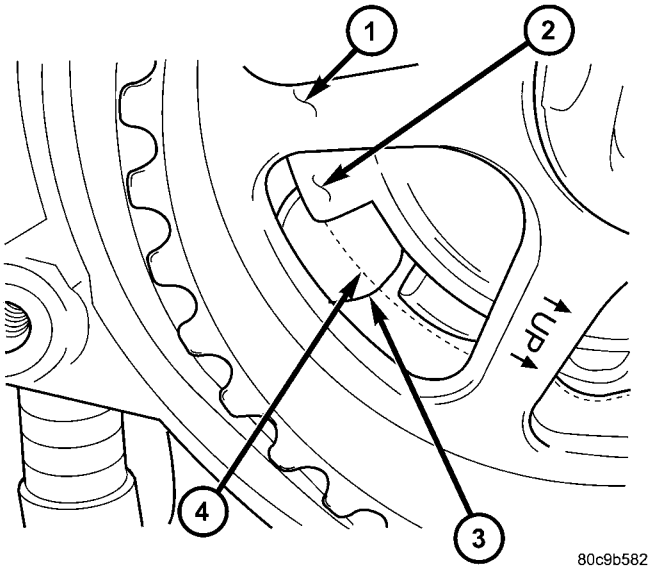

Fig. 15 CMP FACE AT TARGET WHEEL-2.4L

1 - CAMSHAFT DRIVE GEAR
2 - TARGETWHEEL (TONEWHEEL)
3 - FACE OF CMP SENSOR
4 - CUTOUT (NOTCH)

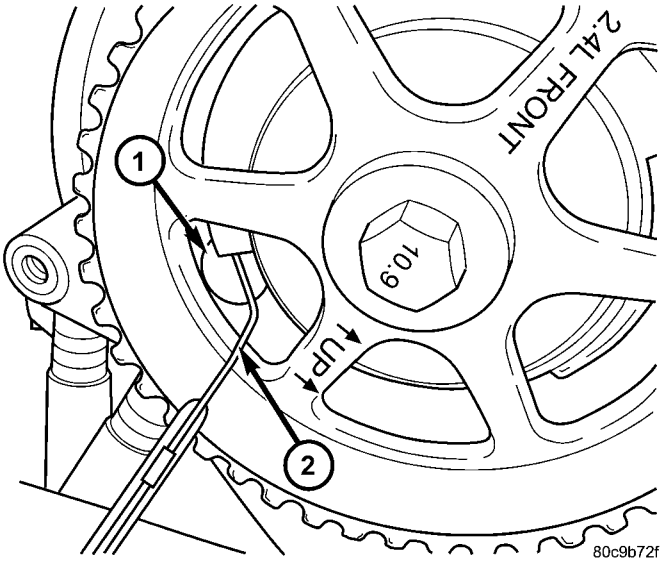

Fig. 16 CMP ADJUSTMENT - 2.4L

1 - FACE OF SENSOR
2 - WIRE GAPPING TOOL

CAMSHAFT POSITION SENSOR (Continued)

3.7L

The Camshaft Position Sensor (CMP) on the 3.7L V-6 engine is bolted to the front/top of the right cylinder head.

(1) Clean out machined hole in cylinder head.

(2) Apply a small amount of engine oil to sensor o-ring.

(3) Install sensor into cylinder head with a slight rocking and twisting action.

CAUTION: Before tightening sensor mounting bolt, be sure sensor is completely flush to cylinder head. If sensor is not flush, damage to sensor mounting tang may result.

(4) Install mounting bolt and tighten. Refer to torque specifications.

(5) Connect electrical connector to sensor.

2.8L TURBODIESEL

(1) Lubricate O-ring on new CMP sensor and install in cylinder head cover/intake manifold (Fig. 13).

(2) Install retaining bolts. Torque to 10.8N·m.

(3) Connect sensor electrical connector.

(4) Install engine cover (Refer to 9 - ENGINE COVER - INSTALLATION).

(5) Connect negative battery cable.

GLOW PLUG

DESCRIPTION

CAUTION: The glow plug system is a 7 volt system. The glow plugs DO NOT tolerate any over voltage. DO NOT test the glow plugs with a 12V jumper as damage will occur to the glow plug.

NOTE: Glow plugs are very sensitive concerning impact load and bending. Any glow plugs that are droped or have fallen must be discarded dispite testing and no damage being visible.

Glow plugs are used to help start a cold or cool engine (Fig. 17). The glow plugs will heat up and glow to heat the combustion chamber of each cylinder. An individual glow plug is used for each cylinder. Each glow plug is threaded into the left side of the cylinder head below the cylinder head cover/intake manifold.

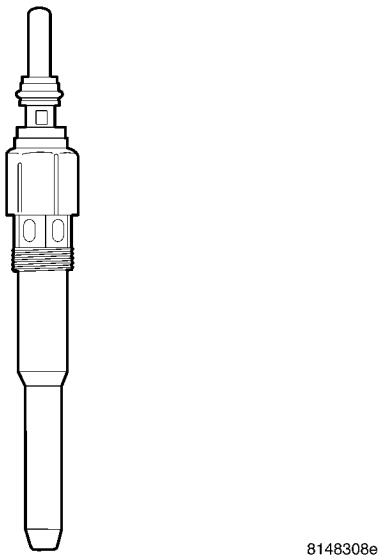

Fig. 17 GSK3 - GLOW PLUG

OPERATION

CAUTION: The glow plug system is a 7 volt system. DO NOT test the glow plugs with a 12V jumper as damage will occur to the glow plug(s).

The ECM monitors various engine sensors. When the ignition key is turned to the ON position, the ECM sends a signal to the glow plug module to turn on, and cycle, the glow plugs for a pre-determined amount of time, plus illuminate the glow plug light in the instrument panel. Once activated, the element inside of the ceramic core of the glow plug begins to glow. Each glow plug draws approximately 5 amps, for a total system amperage of 20 amps at 72°F ambient temperature. If there is a fault with the glow plug system, the ECM will store a fault code.

GLOW PLUG (Continued)

REMOVAL

(1) Disconnect negative battery cable.

(2) Remove generator (Refer to 8 - ELECTRICAL/ CHARGING/GENERATOR - REMOVAL).

(3) Disconnect glow plug electrical connectors (Fig. 19).

NOTE: The intake manifold inlet tube must be removed to remove the cylinder # 3 glow plug (Fig. 18).

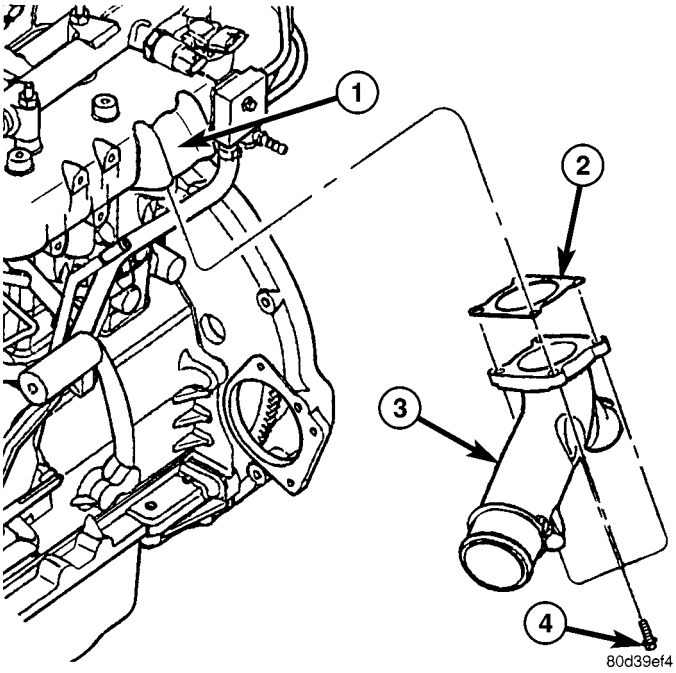

Fig. 18 INTAKE MANIFOLD AIR INLET TUBE

1 - CYLINDER HEAD COVER/INTAKE MANIFOLD
2 - AIR INLET TUBE GASKET
3 - INTAKE MANIFOLD AIR INLET TUBE
4 - RETAINING BOLTS

(4) Remove glow plugs from cylinder head (Fig. 19).

INSTALLATION

(1) Install glow plugs all the way into cylinder head, hand tight, until the thread stops. (Fig. 19).

(2) Tighten glow plugs to 12.5 N·m (110 in.lbs.).

(3) Connect glow plug electrical connectors (Fig. 19).

(4) Install intake manifold air inlet tube (Fig. 18).

(5) Install generator (Refer to 8 - ELECTRICAL/ CHARGING/GENERATOR - INSTALLATION).

(6) Connect negative battery cable.

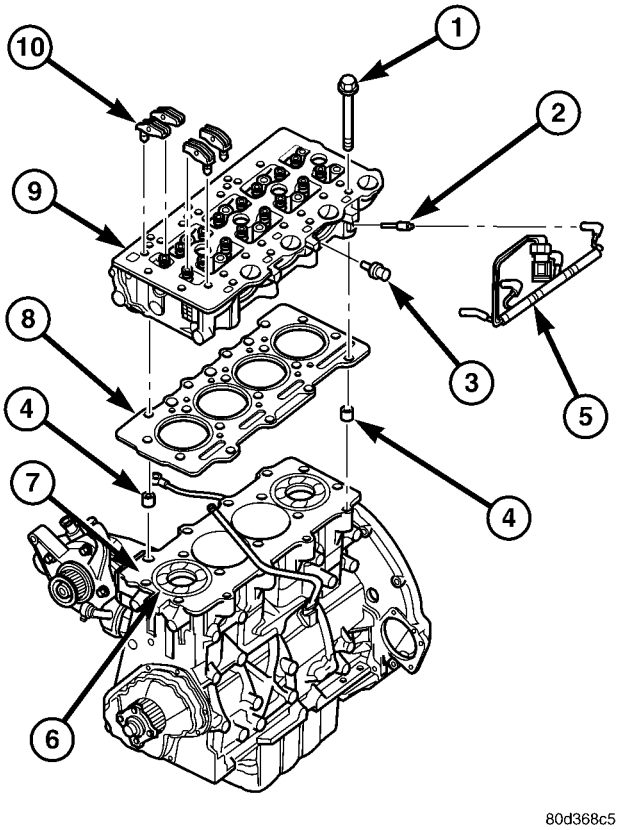

Fig. 19 CYLINDER HEAD ASSEMBLY

1 - CYLINDER HEAD BOLT
2 - GLOW PLUG
3 - COOLANT FITTING
4 - CYLINDER HEAD ALIGNMENT DOWEL
5 - GLOW PLUG HARNESS
6 - CYLINDER LINER
7 - CYLINDER BLOCK
8 - CYLINDER HEAD GASKET
9 - CYLINDER HEAD
10 - ROCKER ARM ASSEMBLIES

GLOW PLUG MODULE

DESCRIPTION

CAUTION: The glow plug system is a 7 volt system. DO NOT ATTEMPT to test the glow plug system with a 12V power source or damage will occur.

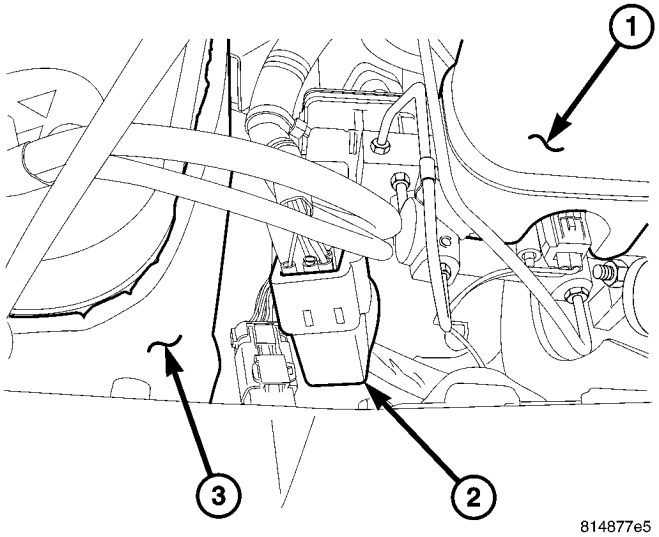

Fig. 20 GLOW PLUG MODULE

1 - MASTER CYLINDER
2 - GLOW PLUG MODULE
3 - BATTERY

The glow plug module is mounted to the inner fender between the battery and the master cylinder in the engine compartment. For an explanation of the glow plug system operation (Refer to 8 - ELECTRICAL/IGNITION CONTROL/GLOW PLUG RELAY - OPERATION) (Fig. 20).

OPERATION

CAUTION: The glow plug system is a 7 volt system. DO NOT ATTEMPT to test the glow plug system with a 12V power source or damage will occur.

When the ignition (key) switch is placed in the ON position, a signal is sent from the sensors to the ECM relaying current engine coolant temperature and ambient air temperature (Fig. 21).

After receiving this signal, the ECM will determine if, when and for how long of a period the glow plugs should be activated. This is done before, during and after the engine is started. Whenever the glow plug module is activated, it will control the 7 volt high amperage circuit for the operation of the four glow plugs.

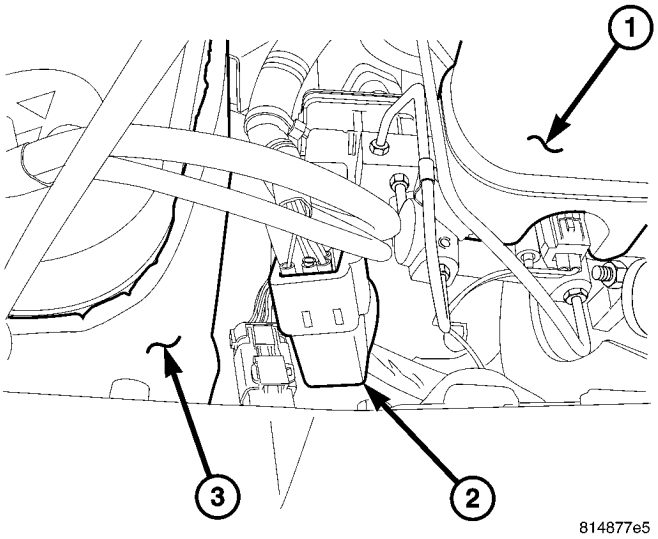

Fig. 21 GLOW PLUG MODULE

1 - MASTER CYLINDER
2 - GLOW PLUG MODULE
3 - BATTERY

The Glow Plug lamp is tied to this circuit. Lamp operation is also controlled by the ECM.

With a cold engine, the glow plug module and glow plugs may be activated for a maximum time of 200 seconds. Refer to the following Glow Plug Control chart for a temperature/time comparison of the glow plug relay operation.

In this chart, Pre-Heat and Post-Heat times are mentioned. Pre-Heat is the amount of time the glow plug control circuit is activated when the ignition (key) is switched ON, without the engine running. Post-Heat is the amount of time the glow plug control circuit is activated after the engine is operated. The Glow Plug lamp will not be activated during the post-heat cycle.

Engine Coolant Temperature ″Key ON″	Wait-To Start Lamp ″ON″ (Seconds)	Pre-Heat Cycle (Glow Plugs On Seconds)	Post-Heat Cycle (Seconds)
-30C	10 SEC.	35 SEC.	200 SEC.
-10C	10 SEC.	23 SEC.	180 SEC.
+10C	1 SEC.	21 SEC.	160 SEC.
+30C	1 SEC.	20 SEC.	140 SEC.
+40C	1 SEC.	19 SEC.	70 SEC.
+70C	1 SEC.	16 SEC.	20 SEC.

GLOW PLUG MODULE (Continued)

REMOVAL

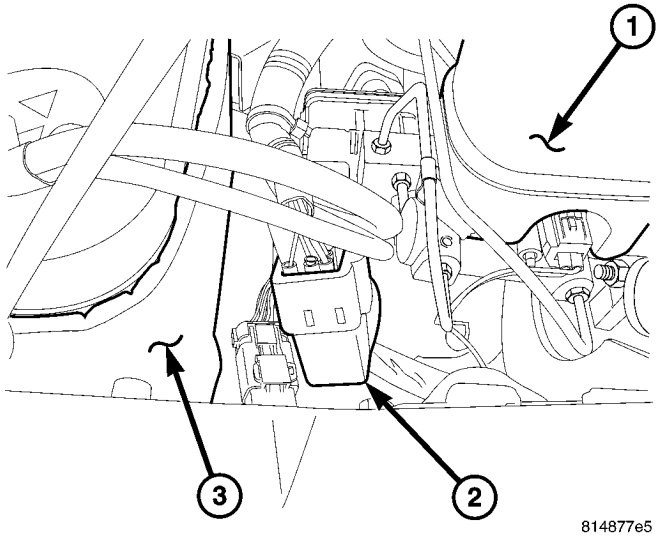

Fig. 22 GLOW PLUG MODULE

1 - MASTER CYLINDER
2 - GLOW PLUG MODULE
3 - BATTERY

(1) Disconnect the negative battery cable.

(2) Disconnect the glow plug wiring harness connector (Fig. 22).

(3) Remove the module from the inner wheel well (Fig. 22).

INSTALLATION

(1) Connect the glow plug wiring harness connector (Fig. 22).

(2) Secure the relay onto the inner fender well (Fig. 22)

(3) Connect the negative battery cable.

IGNITION COIL

DESCRIPTION

2.4L

The coil assembly consists of 2 different coils molded together. The assembly is mounted to the top of the engine (Fig. 23).

3.7L

The 3.7L V-6 engine uses 6 dedicated, and individually fired coil for each spark plug (Fig. 24). Each coil is mounted directly into the cylinder head and onto the top of each spark plug (Fig. 25).

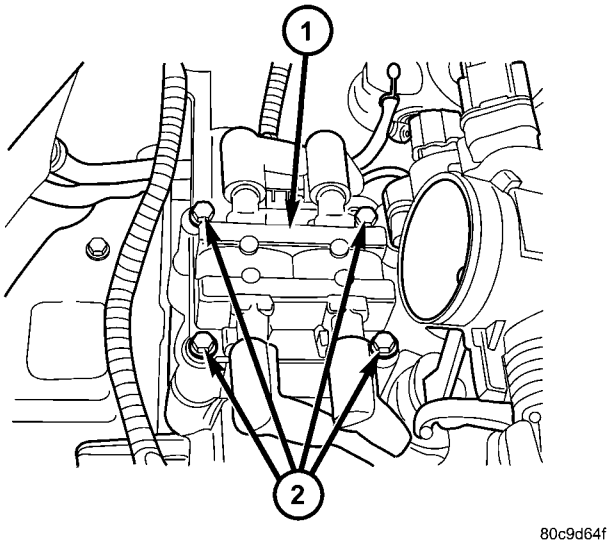

Fig. 23 IGNITION COIL - 2.4L

1 - IGNITION COIL
2 - MOUNTING BOLTS (4)

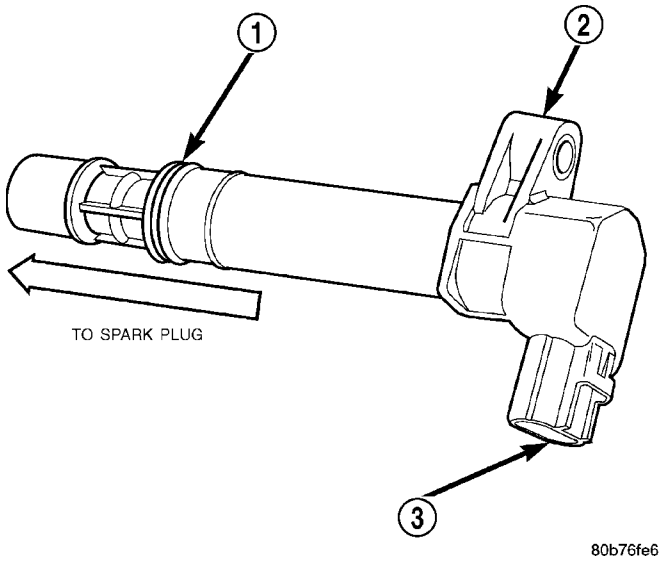

Fig. 24 IGNITION COIL - 3.7L

1 - O-RING
2 - IGNITION COIL
3 - ELECTRICAL CONNECTOR

OPERATION

2.4L

The coil fires two spark plugs simultaneously. One plug is under compression, the other plug fires on the exhaust stroke (lost spark). Coil number one fires cylinders 1 and 4, and coil number two fires cylinders 2 and 3.

The Auto Shutdown (ASD) relay provides battery voltage to the ignition coil. The PCM provides a ground contact (circuit) for energizing the coil(s). The

IGNITION COIL (Continued)

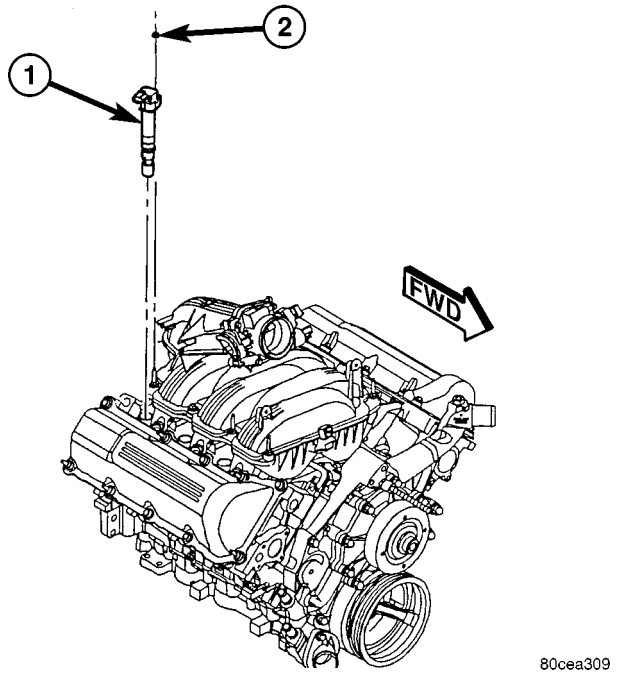

Fig. 25 IGNITION COIL LOCATION - 3.7L

1 - IGNITION COIL
2 - COIL MOUNTING NUT

PCM will de-energize the ASD relay if it does not receive the crankshaft position sensor and camshaft position sensor inputs.

Base ignition timing is not adjustable. By controlling the coil ground circuit, the PCM is able to set the base timing and adjust the ignition timing advance. This is done to meet changing engine operating conditions.

The ignition coil is not oil filled. The windings are embedded in an epoxy compound. This provides heat and vibration resistance that allows the ignition coil to be mounted on the engine.

Spark plug cables (secondary wires or cables) are used with the 2.4L engine.

3.7L

Battery voltage is supplied to the 6 ignition coils from the ASD relay. The Powertrain Control Module (PCM) opens and closes each ignition coil ground circuit at a determined time for ignition coil operation.

Base ignition timing is not adjustable. By controlling the coil ground circuit, the PCM is able to set the base timing and adjust the ignition timing advance. This is done to meet changing engine operating conditions.

The ignition coil is not oil filled. The windings are embedded in an epoxy compound. This provides heat and vibration resistance that allows the ignition coil to be mounted on the engine.

Because of coil design, spark plug cables (secondary cables) are not used with the 3.7L engine.

REMOVAL

2.4L

(1) Disconnect electrical connector at rear of coil.
(2) Remove all secondary cables from coil.
(3) Remove 4 coil mounting bolts (Fig. 26).
(4) Remove coil from vehicle.

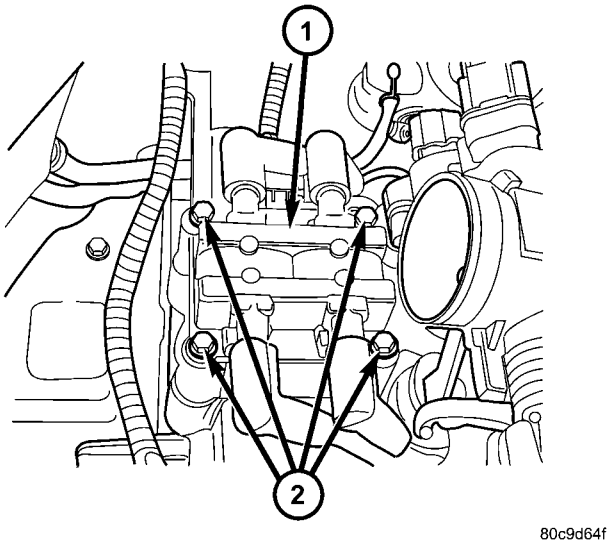

Fig. 26 IGNITION COIL - 2.4L

1 - IGNITION COIL
2 - MOUNTING BOLTS (4)

3.7L

An individual ignition coil is used for each spark plug (Fig. 28). The coil fits into machined holes in the cylinder head. A mounting stud/nut secures each coil to the top of the intake manifold (Fig. 27). The bottom of the coil is equipped with a rubber boot to seal the spark plug to the coil. Inside each rubber boot is a spring. The spring is used for a mechanical contact between the coil and the top of the spark plug. These rubber boots and springs are a permanent part of the coil and are not serviced separately. An o-ring (Fig. 28) is used to seal the coil at the opening into the cylinder head.

(1) Depending on which coil is being removed, the throttle body air intake tube or intake box may need to be removed to gain access to coil.

(2) Disconnect electrical connector from coil by pushing downward on release lock on top of connector and pull connector from coil.

(3) Clean area at base of coil with compressed air before removal.

(4) Remove coil mounting nut from mounting stud (Fig. 27).

IGNITION COIL (Continued)

(5) Carefully pull up coil from cylinder head opening with a slight twisting action.
(6) Remove coil from vehicle.

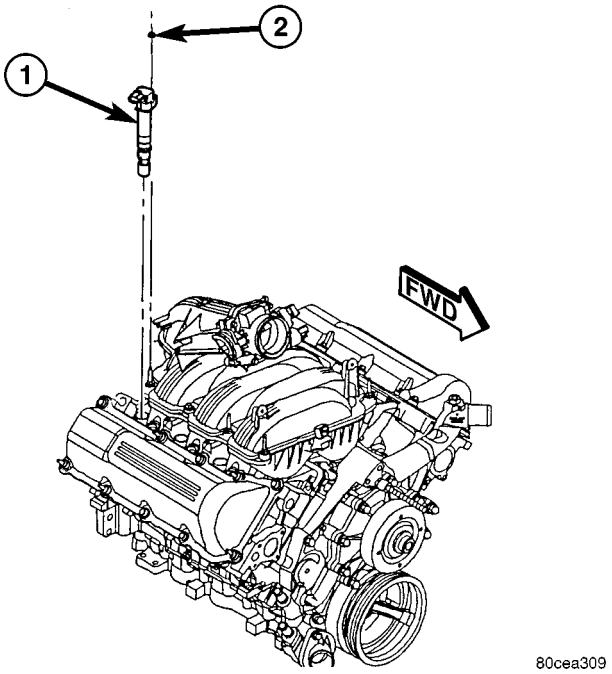

Fig. 27 IGNITION COIL LOCATION - 3.7L

1 - IGNITION COIL
2 - COIL MOUNTING NUT

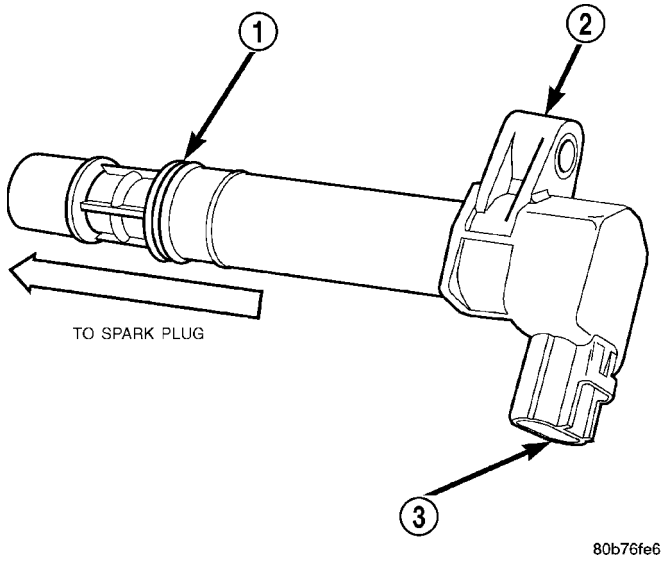

Fig. 28 IGNITION COIL - 3.7L

1 - O-RING
2 - IGNITION COIL
3 - ELECTRICAL CONNECTOR

INSTALLATION

2.4L

(1) Position coil to engine.
(2) Install 4 mounting bolts. Refer to torque specifications.
(3) Install secondary cables.
(4) Install electrical connector at rear of coil.
(5) Install air cleaner tube and housing.

3.7L

(1) Using compressed air, blow out any dirt or contaminants from around top of spark plug.
(2) Check condition of coil o-ring and replace as necessary. To aid in coil installation, apply silicone to coil o-ring.
(3) Position ignition coil into cylinder head opening and push onto spark plug. Do this while guiding coil base over mounting stud.
(4) Install coil mounting stud nut. Refer to torque specifications.
(5) Connect electrical connector to coil by snapping into position.
(6) If necessary, install throttle body air tube or box.

KNOCK SENSOR

DESCRIPTION

The 2 knock sensors are bolted into the cylinder block under the intake manifold. The sensors are used only with the 3.7L engine.

OPERATION

Two knock sensors are used on the 3.7L V-6 engine; one for each cylinder bank. When the knock sensor detects a knock in one of the cylinders on the corresponding bank, it sends an input signal to the Powertrain Control Module (PCM). In response, the PCM retards ignition timing for all cylinders by a scheduled amount.

Knock sensors contain a piezoelectric material which constantly vibrates and sends an input voltage (signal) to the PCM while the engine operates. As the intensity of the crystal's vibration increases, the knock sensor output voltage also increases.

The voltage signal produced by the knock sensor increases with the amplitude of vibration. The PCM receives the knock sensor voltage signal as an input. If the signal rises above a predetermined level, the PCM will store that value in memory and retard ignition timing to reduce engine knock. If the knock sensor voltage exceeds a preset value, the PCM retards ignition timing for all cylinders. It is not a selective cylinder retard.

The PCM ignores knock sensor input during engine idle conditions. Once the engine speed exceeds a specified value, knock retard is allowed.

KNOCK SENSOR (Continued)

Knock retard uses its own short term and long term memory program.

Long term memory stores previous detonation information in its battery-backed RAM. The maximum authority that long term memory has over timing retard can be calibrated.

Short term memory is allowed to retard timing up to a preset amount under all operating conditions (as long as rpm is above the minimum rpm) except at Wide Open Throttle (WOT). The PCM, using short term memory, can respond quickly to retard timing when engine knock is detected. Short term memory is lost any time the ignition key is turned off.

NOTE: Over or under tightening the sensor mounting bolts will affect knock sensor performance, possibly causing improper spark control. Always use the specified torque when installing the knock sensors.

REMOVAL

The 2 knock sensors are bolted into the cylinder block under the intake manifold (Fig. 29).

NOTE: The left sensor is identified by an identification tag (LEFT). It is also identified by a larger bolt head. The Powertrain Control Module (PCM) must have and know the correct sensor left/right positions. Do not mix the sensor locations.

(1) Disconnect knock sensor dual pigtail harness from engine wiring harness. this connection is made near rear of left valve cover (Fig. 29).

(2) Remove intake manifold. Refer to Engine section.

(3) Remove sensor mounting bolts (Fig. 29). Note foam strip on bolt threads. This foam is used only to retain the bolts to sensors for plant assembly. It is not used as a sealant. Do not apply any adhesive, sealant or thread locking compound to these bolts.

(4) Remove sensors from engine.

INSTALLATION

NOTE: The left sensor is identified by an identification tag (LEFT). It is also identified by a larger bolt head. The Powertrain Control Module (PCM) must have and know the correct sensor left/right positions. Do not mix the sensor locations.

(1) Thoroughly clean knock sensor mounting holes.

(2) Install sensors into cylinder block.

NOTE: Over or under tightening the sensor mounting bolts will affect knock sensor performance, possibly causing improper spark control. Always use the specified torque when installing the knock sensors. The torque for the knock senor bolt is relatively light for an 8mm bolt.

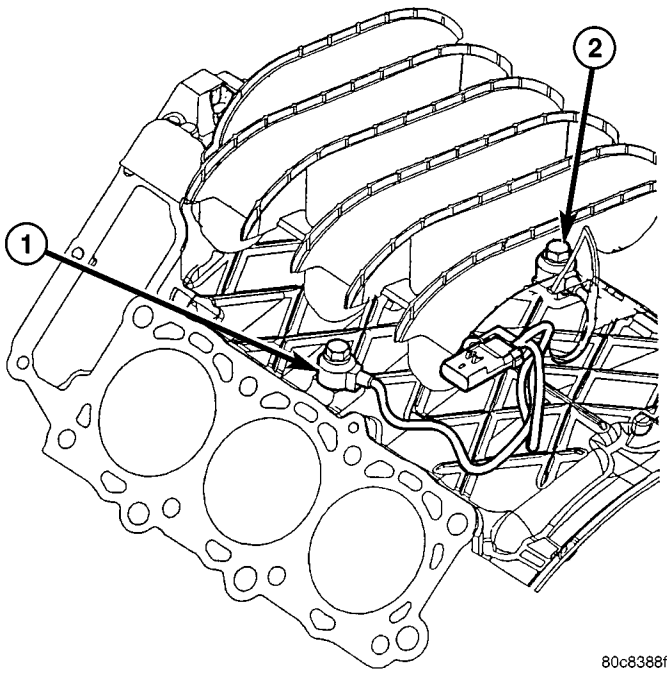

Fig. 29 KNOCK SENSOR LOCATION

1 - KNOCK SENSORS (2)
2 - MOUNTING BOLTS

NOTE: Note foam strip on bolt threads. This foam is used only to retain the bolts to sensors for plant assembly. It is not used as a sealant. Do not apply any adhesive, sealant or thread locking compound to these bolts.

(3) Install and tighten mounting bolts. Refer to torque specification.

(4) Install intake manifold. Refer to Engine section.

(5) Connect knock sensor wiring harness to engine harness at rear of intake manifold.

SPARK PLUG

DESCRIPTION

Resistor type spark plugs are used.

Spark plug resistance values range from 6,000 to 20,000 ohms (when checked with at least a 1000 volt spark plug tester). **Do not use an ohmmeter to check the resistance values of the spark plugs. Inaccurate readings will result.**

SPARK PLUG (Continued)

OPERATION

To prevent possible pre-ignition and/or mechanical engine damage, the correct type/heat range/number spark plug must be used.

Always use the recommended torque when tightening spark plugs. This is especially true when plugs are equipped with tapered seats. Incorrect torque can distort the spark plug and change plug gap. It can also pull the plug threads and do possible damage to both the spark plug and the cylinder head.

Remove the spark plugs and examine them for burned electrodes and fouled, cracked or broken porcelain insulators. Keep plugs arranged in the order in which they were removed from the engine. A single plug displaying an abnormal condition indicates that a problem exists in the corresponding cylinder. Replace spark plugs at the intervals recommended in the Lubrication and Maintenance section.

Spark plugs that have low mileage may be cleaned and reused if not otherwise defective, carbon or oil fouled. Also refer to Spark Plug Conditions.

CAUTION: Never use a motorized wire wheel brush to clean the spark plugs. Metallic deposits will remain on the spark plug insulator and will cause plug misfire.

DIAGNOSIS AND TESTING - SPARK PLUG CONDITIONS

NORMAL OPERATING

The few deposits present on the spark plug will probably be light tan or slightly gray in color. This is evident with most grades of commercial gasoline (Fig. 30). There will not be evidence of electrode burning. Gap growth will not average more than approximately 0.025 mm (.001 in) per 3200 km (2000 miles) of operation. Spark plugs that have normal wear can usually be cleaned, have the electrodes filed, have the gap set and then be installed.

Some fuel refiners in several areas of the United States have introduced a manganese additive (MMT) for unleaded fuel. During combustion, fuel with MMT causes the entire tip of the spark plug to be coated with a rust colored deposit. This rust color can be misdiagnosed as being caused by coolant in the combustion chamber. Spark plug performance may be affected by MMT deposits.

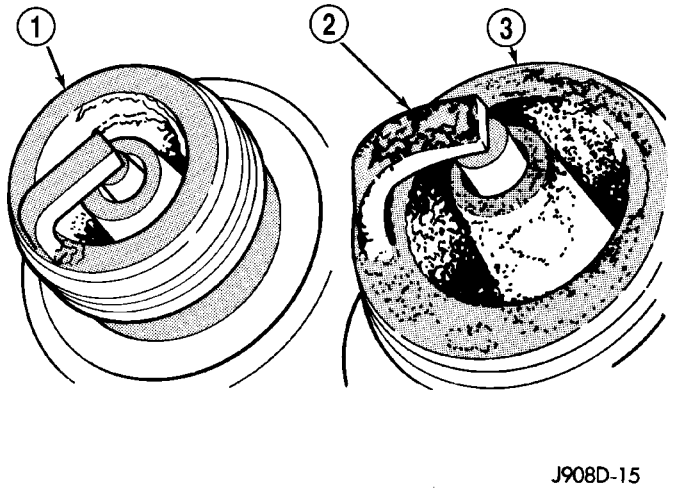

Fig. 30 Normal Operation and Cold (Carbon) Fouling

1 - NORMAL
2 - DRY BLACK DEPOSITS
3 - COLD (CARBON) FOULING

COLD FOULING/CARBON FOULING

Cold fouling is sometimes referred to as carbon fouling. The deposits that cause cold fouling are basically carbon (Fig. 30). A dry, black deposit on one or two plugs in a set may be caused by sticking valves or defective spark plug cables. Cold (carbon) fouling of the entire set of spark plugs may be caused by a clogged air cleaner element or repeated short operating times (short trips).

WET FOULING OR GAS FOULING

A spark plug coated with excessive wet fuel or oil is wet fouled. In older engines, worn piston rings, leaking valve guide seals or excessive cylinder wear can cause wet fouling. In new or recently overhauled engines, wet fouling may occur before break-in (normal oil control) is achieved. This condition can usually be resolved by cleaning and reinstalling the fouled plugs.

SPARK PLUG (Continued)

OIL OR ASH ENCRUSTED

If one or more spark plugs are oil or oil ash encrusted (Fig. 31), evaluate engine condition for the cause of oil entry into that particular combustion chamber.

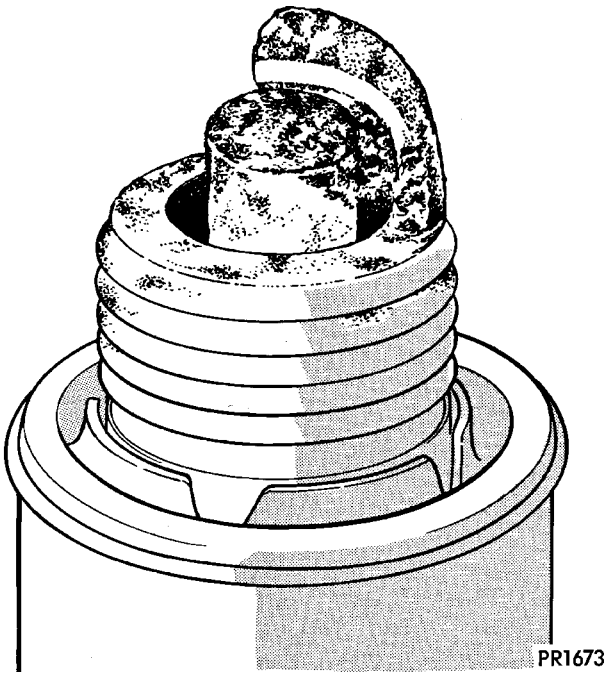

Fig. 31 Oil or Ash Encrusted

ELECTRODE GAP BRIDGING

Electrode gap bridging may be traced to loose deposits in the combustion chamber. These deposits accumulate on the spark plugs during continuous stop-and-go driving. When the engine is suddenly subjected to a high torque load, deposits partially liquefy and bridge the gap between electrodes (Fig. 32). This short circuits the electrodes. Spark plugs with electrode gap bridging can be cleaned using standard procedures.

SCAVENGER DEPOSITS

Fuel scavenger deposits may be either white or yellow (Fig. 33). They may appear to be harmful, but this is a normal condition caused by chemical additives in certain fuels. These additives are designed to change the chemical nature of deposits and decrease spark plug misfire tendencies. Notice that accumulation on the ground electrode and shell area may be heavy, but the deposits are easily removed. Spark plugs with scavenger deposits can be considered normal in condition and can be cleaned using standard procedures.

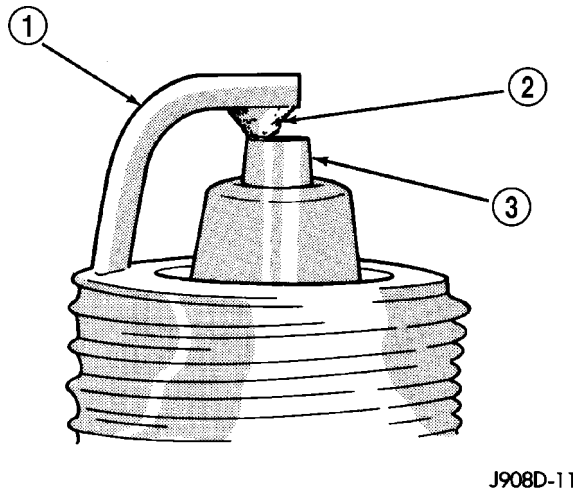

Fig. 32 Electrode Gap Bridging

1 - GROUND ELECTRODE
2 - DEPOSITS
3 - CENTER ELECTRODE

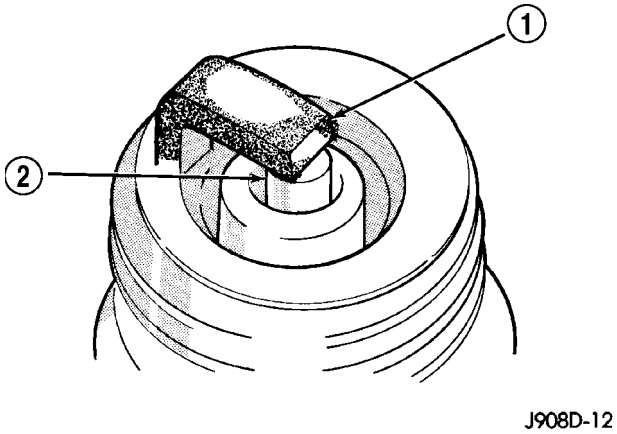

Fig. 33 Scavenger Deposits

1 - GROUND ELECTRODE COVERED WITH WHITE OR YELLOW DEPOSITS
2 - CENTER ELECTRODE

SPARK PLUG (Continued)

CHIPPED ELECTRODE INSULATOR

A chipped electrode insulator usually results from bending the center electrode while adjusting the spark plug electrode gap. Under certain conditions, severe detonation can also separate the insulator from the center electrode (Fig. 34). Spark plugs with this condition must be replaced.

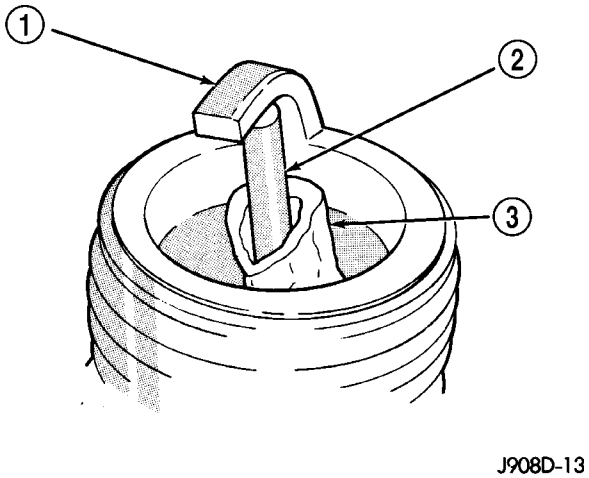

Fig. 34 Chipped Electrode Insulator

1 - GROUND ELECTRODE
2 - CENTER ELECTRODE
3 - CHIPPED INSULATOR

PREIGNITION DAMAGE

Preignition damage is usually caused by excessive combustion chamber temperature. The center electrode dissolves first and the ground electrode dissolves somewhat latter (Fig. 35). Insulators appear relatively deposit free. Determine if the spark plug has the correct heat range rating for the engine. Determine if ignition timing is over advanced or if other operating conditions are causing engine overheating. (The heat range rating refers to the operating temperature of a particular type spark plug. Spark plugs are designed to operate within specific temperature ranges. This depends upon the thickness and length of the center electrodes porcelain insulator.)

SPARK PLUG OVERHEATING

Overheating is indicated by a white or gray center electrode insulator that also appears blistered (Fig. 36). The increase in electrode gap will be considerably in excess of 0.001 inch per 2000 miles of operation. This suggests that a plug with a cooler heat range rating should be used. Over advanced ignition timing, detonation and cooling system malfunctions can also cause spark plug overheating.

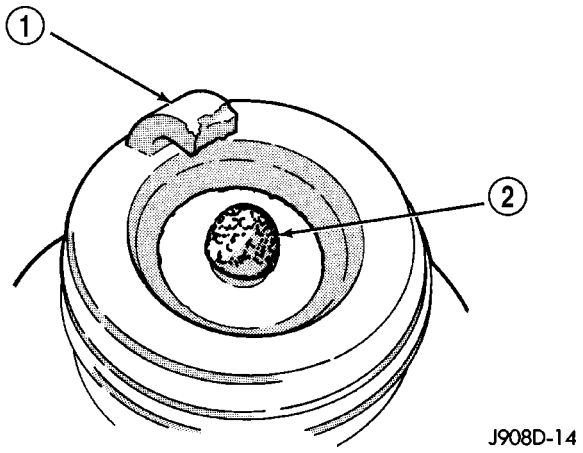

Fig. 35 Preignition Damage

1 - GROUND ELECTRODE STARTING TO DISSOLVE
2 - CENTER ELECTRODE DISSOLVED

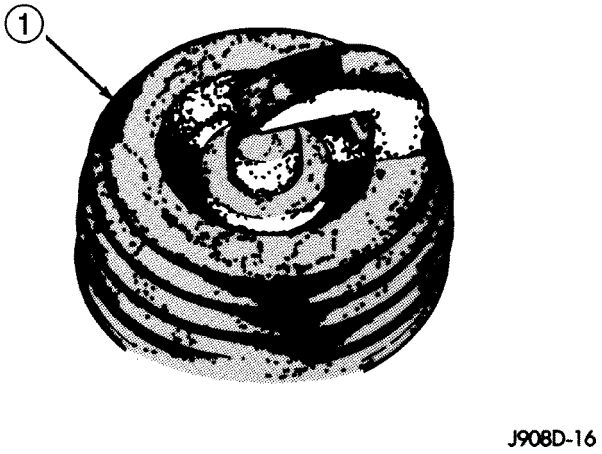

Fig. 36 Spark Plug Overheating

1 - BLISTERED WHITE OR GRAY COLORED INSULATOR

REMOVAL

2.4L

If spark plug for #2 or #3 cylinder is being removed, throttle body must be removed. Refer to Throttle Body Removal.

(1) Remove air cleaner tube and housing.

(2) Twist secondary cable at cylinder head to break loose at spark plug. Remove cable from plug.

(3) Prior to removing spark plug, spray compressed air into cylinder head opening. This will help prevent foreign material from entering combustion chamber.

(4) Remove spark plug from cylinder head using a quality socket with a rubber or foam insert.

(5) Inspect spark plug condition. Refer to Spark Plug Conditions.

SPARK PLUG (Continued)

3.7L

Each individual spark plug is located under each ignition coil. Each individual ignition coil must be removed to gain access to each spark plug. Refer to Ignition Coil Removal/Installation.

(1) Prior to removing ignition coil, spray compressed air around coil base at cylinder head.

(2) Prior to removing spark plug, spray compressed air into cylinder head opening. This will help prevent foreign material from entering combustion chamber.

(3) Remove spark plug from cylinder head using a quality socket with a rubber or foam insert. Also check condition of ignition coil o-ring and replace as necessary.

(4) Inspect spark plug condition. Refer to Spark Plug Conditions.

CLEANING SPARK PLUGS

The plugs may be cleaned using commercially available spark plug cleaning equipment. After cleaning, file the center electrode flat with a small point file or jewelers file before adjusting gap.

CAUTION: Never use a motorized wire wheel brush to clean the spark plugs. Metallic deposits will remain on the spark plug insulator and will cause plug misfire.

INSTALLATION

2.4L

CAUTION: Spark plug tightening on the 2.4L is torque critical. The plugs are equipped with tapered seats. Do not exceed 15 ft. lbs. torque.

Special care should be taken when installing spark plugs into the cylinder head spark plug wells. Be sure the plugs do not drop into the plug wells as electrodes can be damaged.

Always tighten spark plugs to the specified torque. Over tightening can cause distortion resulting in a change in the spark plug gap or a cracked porcelain insulator.

(1) Start the spark plug into the cylinder head by hand to avoid cross threading.

(2) Tighten spark plugs. Refer to torque specifications.

(3) Install throttle body. Refer to Throttle Body Installation.

(4) Install air cleaner tube and housing.

3.7L

Special care should be taken when installing spark plugs into the cylinder head spark plug wells. Be sure the plugs do not drop into the plug wells as electrodes can be damaged.

Always tighten spark plugs to the specified torque. Over tightening can cause distortion resulting in a change in the spark plug gap or a cracked porcelain insulator.

(1) Start the spark plug into the cylinder head by hand to avoid cross threading.

(2) Tighten spark plugs. Refer to torque specifications.

(3) Before installing coil(s), check condition of coil o-ring and replace as necessary. To aid in coil installation, apply silicone to coil o-ring.

(4) Install ignition coil(s). Refer to Ignition Coil Removal/Installation.

IGNITION COIL CAPACITOR

DESCRIPTION

One coil capacitor is used. It is located in the engine compartment and attached (clipped) to a wiring trough near the brake power booster.

OPERATION

The coil capacitor(s) help dampen the amount of conducted electrical noise to the camshaft position sensor, crankshaft position sensor, and throttle position sensor. This noise is generated on the 12V supply wire to the ignition coils and fuel injectors.

REMOVAL

The coil capacitor is located in the engine compartment and is attached (clipped) to a wiring harness trough near the brake power booster (graphic not available).

(1) Unclip capacitor from wiring harness trough.

(2) Disconnect electrical connector at capacitor.

INSTALLATION

(1) Connect electrical connector to coil capacitor.

(2) Position capacitor into v-clip on wiring harness trough.

INSTRUMENT CLUSTER

TABLE OF CONTENTS

page

INSTRUMENT CLUSTER
DESCRIPTION 2
OPERATION 5
DIAGNOSIS AND TESTING
INSTRUMENT CLUSTER 8
REMOVAL 9
DISASSEMBLY 10
ASSEMBLY 11
INSTALLATION 11
ABS INDICATOR
DESCRIPTION 12
OPERATION 12
AIRBAG INDICATOR
DESCRIPTION 13
OPERATION 13
BRAKE/PARK BRAKE INDICATOR
DESCRIPTION 14
OPERATION 14
CHARGING INDICATOR
DESCRIPTION 15
OPERATION 15
COOLANT LOW INDICATOR
DESCRIPTION 16
OPERATION 16
CRUISE INDICATOR
DESCRIPTION 17
OPERATION 17
DOOR AJAR INDICATOR
DESCRIPTION 17
OPERATION 18
ENGINE TEMPERATURE GAUGE
DESCRIPTION 18
OPERATION 18
ETC INDICATOR
DESCRIPTION 19
OPERATION 19
FRONT FOG LAMP INDICATOR
DESCRIPTION 20
OPERATION 20
FUEL GAUGE
DESCRIPTION 21
OPERATION 21
GATE AJAR INDICATOR
DESCRIPTION 22
OPERATION 22
GLASS AJAR INDICATOR
DESCRIPTION 23
OPERATION 23

page

HIGH BEAM INDICATOR
DESCRIPTION 24
OPERATION 24
LIGHT BAR LAMP INDICATOR
DESCRIPTION 24
OPERATION 25
LOW FUEL INDICATOR
DESCRIPTION 25
OPERATION 25
LOW OIL PRESSURE INDICATOR
DESCRIPTION 26
OPERATION 26
MALFUNCTION INDICATOR LAMP (MIL)
DESCRIPTION 27
OPERATION 27
ODOMETER
DESCRIPTION 28
OPERATION 28
OVERDRIVE OFF INDICATOR
DESCRIPTION 29
OPERATION 29
REAR FOG LAMP INDICATOR
DESCRIPTION 30
OPERATION 30
SEATBELT INDICATOR
DESCRIPTION 31
OPERATION 31
STANDARD PROCEDURE - ENHANCED
SEATBELT REMINDER PROGRAMMING 32
SECURITY INDICATOR
DESCRIPTION 32
OPERATION 32
SHIFT INDICATOR (TRANSFER CASE)
DESCRIPTION
PART TIME INDICATOR 33
FULL TIME INDICATOR 33
FOUR LOW MODE INDICATOR 34
OPERATION
PART TIME INDICATOR 34
FULL TIME INDICATOR 34
FOUR LOW MODE INDICATOR 35
SPEEDOMETER
DESCRIPTION 36
OPERATION 36
TACHOMETER
DESCRIPTION 37
OPERATION 37
TIRE PRESSURE MONITOR INDICATOR
DESCRIPTION 38

OPERATION 38
TRANS TEMP INDICATOR
DESCRIPTION 38
OPERATION 39
TURN SIGNAL INDICATOR
DESCRIPTION 39
OPERATION 39
WAIT-TO-START INDICATOR
DESCRIPTION 40
OPERATION 40
WASHER FLUID INDICATOR
DESCRIPTION 41
OPERATION 41
WATER-IN-FUEL INDICATOR
DESCRIPTION 41
OPERATION 42

INSTRUMENT CLUSTER

DESCRIPTION

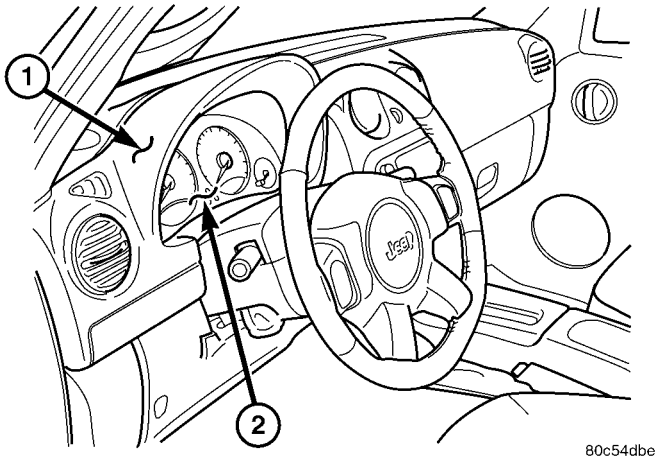

Fig. 1 Instrument Cluster

1 - INSTRUMENT PANEL
2 - INSTRUMENT CLUSTER

The instrument cluster for this model is an ElectroMechanical Instrument Cluster (EMIC) that is located in the instrument panel above the steering column opening, directly in front of the driver (Fig. 1). The remainder of the EMIC, including the mounts and the electrical connections, are concealed within the instrument panel behind the cluster bezel. Besides analog gauges and indicators, the EMIC module incorporates a blue-green digital Vacuum Fluorescent Display (VFD) unit for displaying odometer/trip odometer information, some warning or reminder indications and certain diagnostic information.

The EMIC gauges and indicators are visible through a dedicated opening in the cluster bezel on the instrument panel and are protected by a clear plastic cluster lens that is integral to a cluster lens, hood and mask unit (Fig. 2). Just behind the cluster lens is the cluster hood and an integral cluster mask, which are constructed of molded black plastic. Two cluster masks are used; a base black version is used on base models, while a premium black version features a chrome trim ring around the perimeter of each gauge opening and is used on premium models.

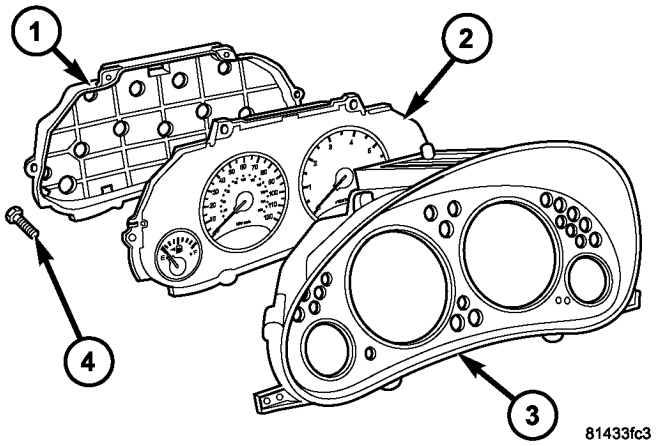

Fig. 2 Instrument Cluster Components

1 - REAR COVER
2 - CLUSTER HOUSING
3 - LENS, HOOD & MASK
4 - SCREW (6)

The cluster hood serves as a visor and shields the face of the cluster from ambient light and reflections to reduce glare, while the cluster mask serves to separate and define the individual gauges and indicators of the EMIC. A black plastic odometer/trip odometer switch button protrudes through dedicated holes in the cluster mask and the cluster lens near the lower edge of the cluster just to the right of the tachometer. The molded plastic EMIC lens, hood and mask unit has three integral mounting tabs, one on each of the lower outboard corners of the unit and one on the upper surface of the hood near the center. These mounting tabs are used to secure the EMIC to the molded plastic instrument panel cluster carrier with two screws at the top, and one screw at each outboard tab.

The rear of the cluster housing and the EMIC electronic circuitry are protected by a molded plastic rear cover, which is secured to the cluster lens, hood and mask unit with six screws. The rear cover includes clearance holes for service access to each of the nine incandescent bulb and bulb holder units installed on the cluster circuit board for general illumination lighting and for the cluster connector receptacle. The single connector receptacle on the back of the cluster electronic circuit board connects the EMIC to the

INSTRUMENT CLUSTER (Continued)

vehicle electrical system through a single dedicated take out and connector of the instrument panel wire harness.

Sandwiched between the rear cover and the lens, hood and mask unit is the cluster housing. The molded plastic cluster housing serves as the carrier for the cluster circuit board and circuitry, the cluster connector receptacle, the gauges, a Light Emitting Diode (LED) for each cluster indicator, the VFD unit, an audible tone transducer, the cluster overlay, the gauge pointers, the odometer/trip odometer switch and the switch button.

Behind the cluster lens, hood, and mask unit on the face of the cluster housing is the cluster overlay. The cluster overlay is a laminated plastic unit. The dark, visible, outer surface of the overlay is marked with all of the gauge dial faces and graduations, but this layer is also translucent. The darkness of this outer layer prevents the cluster from appearing cluttered or busy by concealing the cluster indicators that are not illuminated, while the translucence of this layer allows those indicators and icons that are illuminated to be readily visible. The underlying layer of the overlay is opaque and allows light from the various indicators and the incandescent illumination lamps behind it to be visible through the outer layer of the overlay only through predetermined stencil-like cutouts. A rectangular opening in the overlay at the base of the tachometer dial face has a smoked clear lens through which the illuminated VFD unit can be viewed.

Numerous versions of the EMIC module are offered on this model, in both base and premium trim. These versions accommodate all of the variations of optional equipment and regulatory requirements for the various markets in which the vehicle will be offered. The microprocessor-based EMIC utilizes integrated circuitry and information carried on the Programmable Communication Interface (PCI) data bus along with several hard wired analog and multiplexed inputs to monitor sensors and switches throughout the vehicle. In response to those inputs, the internal circuitry and programming of the EMIC allow it to control and integrate many electronic functions and features of the vehicle through both hard wired outputs and the transmission of electronic message outputs to other electronic modules in the vehicle over the PCI data bus. (Refer to 8 - ELECTRICAL/ELECTRONIC CONTROL MODULES/COMMUNICATION - DESCRIPTION - PCI BUS).

Besides typical instrument cluster gauge and indicator support, the electronic functions and features that the EMIC supports or controls include the following:

- **Audible Warnings** - The EMIC electronic circuit board is equipped with an audible tone transducer and programming that allows it to provide various audible alerts to the vehicle operator, including chime tones and beep tones. (Refer to 8 - ELECTRICAL/CHIME WARNING SYSTEM - DESCRIPTION).
- **Panel Lamps Dimming Control** - The EMIC provides a hard wired 12-volt Pulse-Width Modulated (PWM) output that synchronizes the dimming level of all panel lamps dimmer controlled lamps with that of the cluster illumination lighting.

The EMIC houses four analog gauges, one odometer/trip odometer VFD unit and has provisions for up to twenty-five indicators (Fig. 3). Some of the EMIC indicators are automatically configured when the EMIC is connected to the vehicle electrical system for compatibility with certain optional equipment or equipment required for regulatory purposes in certain markets. While each EMIC may have provisions for indicators to support every available option, the configurable indicators will not be functional in a vehicle that does not have the equipment that an indicator supports.

The EMIC includes the following analog gauges:

- **Engine Temperature Gauge**
- **Fuel Gauge**
- **Speedometer**
- **Tachometer**

The EMIC includes provisions for the following indicators (Fig. 3):

- **Airbag Indicator**
- **Antilock Brake System (ABS) Indicator**
- **Brake Indicator**
- **Charging Indicator**
- **Coolant Low Indicator (with Diesel Engine only)**
- **Cruise Indicator (in Odometer VFD)**
- **Electronic Throttle Control (ETC) Indicator (with Diesel Engine only)**
- **Four-Wheel Drive Full Time Indicator (with Selec-Trac Transfer Case only)**
- **Four-Wheel Drive Low Mode Indicator (with Four-Wheel Drive only)**
- **Four-Wheel Drive Part Time Indicator (with Four-Wheel Drive only)**
- **Front Fog Lamp Indicator**
- **High Beam Indicator**
- **Light Bar Lamp Indicator (with Light Bar only)**
- **Low Fuel Indicator**
- **Low Oil Pressure Indicator**
- **Malfunction Indicator Lamp (MIL)**
- **Overdrive-Off Indicator (with Automatic Transmission only)**

INSTRUMENT CLUSTER (Continued)

- **Rear Fog Lamp Indicator (with Rear Fog Lamps only)**
- **Seatbelt Indicator**
- **Security Indicator**
- **Tire Pressure Monitor Indicator**
- **Transmission Overtemp Indicator (with Automatic Transmission only)**
- **Turn Signal (Right and Left) Indicators**
- **Wait-To-Start Indicator (with Diesel Engine only)**
- **Water-In-Fuel Indicator (with Diesel Engine only)**

Each indicator in the EMIC, except the Cruise indicator located within the odometer/trip odometer VFD unit, is illuminated by a dedicated Light Emitting Diode (LED) that is soldered onto the EMIC electronic circuit board. The LED units are not available for service replacement and, if damaged or faulty, the entire EMIC must be replaced. Cluster illumination is accomplished by dimmable incandescent back lighting, which illuminates the gauges for visibility when the exterior lighting is turned on. Each of the incandescent bulbs is secured by an integral bulb holder to the electronic circuit board from the back of the cluster housing.

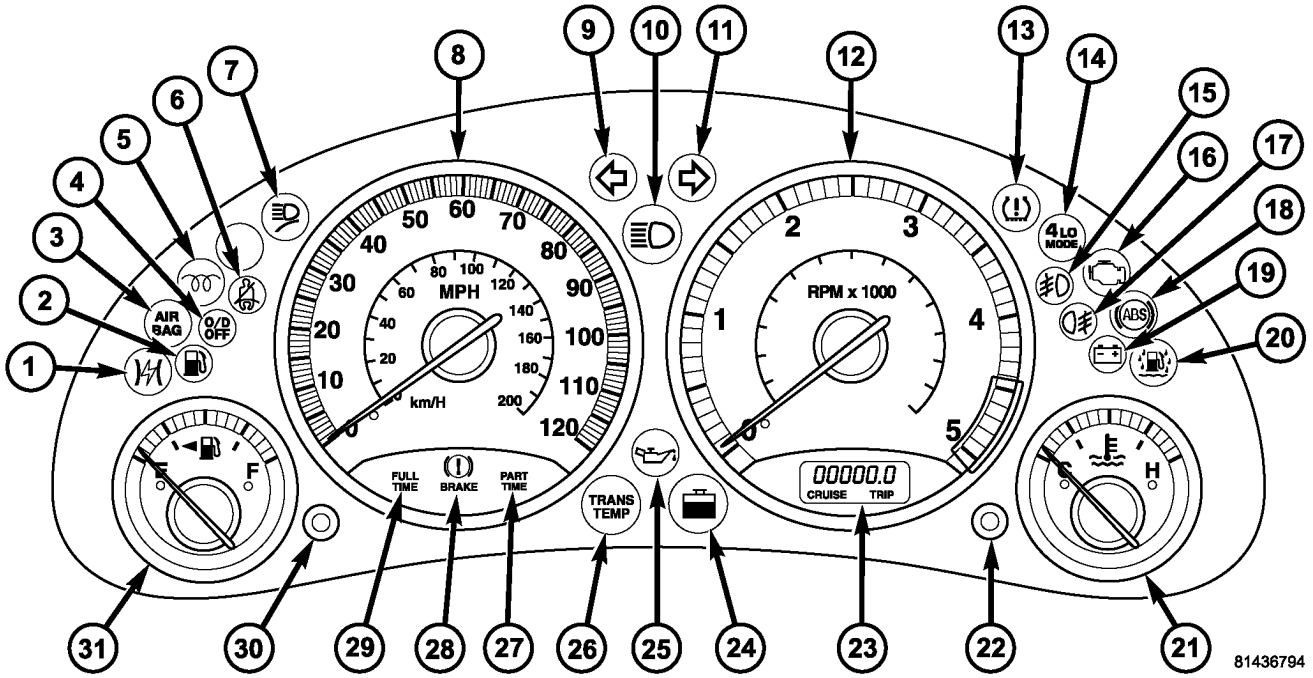

Fig. 3 Gauges & Indicators

1 - ETC INDICATOR
2 - LOW FUEL INDICATOR
3 - AIRBAG INDICATOR
4 - OVERDRIVE-OFF INDICATOR
5 - WAIT-TO-START INDICATOR
6 - SEATBELT INDICATOR
7 - LIGHT BAR LAMP INDICATOR
8 - SPEEDOMETER
9 - LEFT TURN INDICATOR
10 - HIGH BEAM INDICATOR
11 - RIGHT TURN INDICATOR
12 - TACHOMETER
13 - TIRE PRESSURE MONITOR INDICATOR
14 - 4WD LOW MODE INDICATOR
15 - FRONT FOG LAMP INDICATOR
16 - MALFUNCTION INDICATOR LAMP (MIL)
17 - REAR FOG LAMP INDICATOR
18 - ABS INDICATOR
19 - CHARGING INDICATOR
20 - WATER-IN-FUEL INDICATOR
21 - ENGINE TEMPERATURE GAUGE
22 - ODOMETER/TRIP ODOMETER SWITCH BUTTON
23 - ODOMETER/TRIP ODOMETER DISPLAY (INCLUDES CRUISE INDICATOR)
24 - COOLANT LOW INDICATOR
25 - LOW OIL PRESSURE INDICATOR
26 - TRANSMISSION OVERTEMP INDICATOR
27 - PART TIME 4WD INDICATOR
28 - BRAKE INDICATOR
29 - FULL TIME 4WD INDICATOR
30 - SECURITY INDICATOR
31 - FUEL GAUGE

INSTRUMENT CLUSTER (Continued)

Hard wired circuitry connects the EMIC to the electrical system of the vehicle. These hard wired circuits are integral to several wire harnesses, which are routed throughout the vehicle and retained by many different methods. These circuits may be connected to each other, to the vehicle electrical system and to the EMIC through the use of a combination of soldered splices, splice block connectors, and many different types of wire harness terminal connectors and insulators. Refer to the appropriate wiring information. The wiring information includes wiring diagrams, proper wire and connector repair procedures, further details on wire harness routing and retention, as well as pin-out and location views for the various wire harness connectors, splices and grounds.

The EMIC module for this model is serviced only as a complete unit. The EMIC module cannot be adjusted or repaired. If a gauge, an LED indicator, the VFD unit, the electronic circuit board, the circuit board hardware, the cluster overlay, or the EMIC housing are damaged or faulty, the entire EMIC module must be replaced. The cluster lens, hood and mask unit and the incandescent general illumination lamp bulbs with holders are available for individual service replacement.

OPERATION

The ElectroMechanical Instrument Cluster (EMIC) is designed to allow the vehicle operator to monitor the conditions of many of the vehicle components and operating systems. The gauges and indicators in the EMIC provide valuable information about the various standard and optional powertrains, fuel and emissions systems, cooling systems, lighting systems, safety systems and many other convenience items. The EMIC is installed in the instrument panel so that all of these monitors can be easily viewed by the vehicle operator when driving, while still allowing relative ease of access for service.

The microprocessor-based EMIC hardware and software uses various inputs to control the gauges and indicators visible on the face of the cluster. Some of these inputs are hard wired, but most are in the form of electronic messages that are transmitted by other electronic modules over the Programmable Communication Interface (PCI) data bus. (Refer to 8 - ELECTRICAL/ELECTRONIC CONTROL MODULES/COMMUNICATION - OPERATION).

The EMIC microprocessor smooths the input data using algorithms to provide gauge readings that are accurate, stable and responsive to operating conditions. These algorithms are designed to provide gauge readings during normal operation that are consistent with customer expectations. However, when abnormal conditions exist such as high coolant temperature, the algorithm can drive the gauge pointer to an extreme position and the microprocessor can sound a chime through the on-board audible tone transducer to provide distinct visual and audible indications of a problem to the vehicle operator. The EMIC may also produce audible warnings for other electronic modules in the vehicle based upon electronic tone request messages received over the PCI data bus. Each audible warning is intended to provide the vehicle operator with an audible alert to supplement a visual indication.

The EMIC circuitry operates on battery current received through a fused B(+) fuse on a non-switched fused B(+) circuit, and on battery current received through a fused ignition switch output (run-start) fuse on a fused ignition switch output (run-start) circuit. This arrangement allows the EMIC to provide some features regardless of the ignition switch position, while other features will operate only with the ignition switch in the On or Start positions. The EMIC receives a ground input from the Body Control Module (BCM) as a wake-up signal in order to provide the ignition-off features. The EMIC circuitry is grounded through a ground circuit and take out of the instrument panel wire harness with an eyelet terminal connector that is secured by a nut to a ground stud located on the left instrument panel end bracket.

The EMIC also has a self-diagnostic actuator test capability, which will test each of the PCI bus message-controlled functions of the cluster by lighting the appropriate indicators (except the airbag indicator), positioning the gauge needles at several predetermined calibration points across the gauge faces, and stepping the display of the odometer Vacuum-Fluorescent Display (VFD) unit sequentially from all ones through all nines. (Refer to 8 - ELECTRICAL/ INSTRUMENT CLUSTER - DIAGNOSIS AND TESTING).

GAUGES

All gauges receive battery current through the EMIC circuitry when the ignition switch is in the On or Start positions. With the ignition switch in the Off position battery current is not supplied to any gauges, and the EMIC circuitry is programmed to move all of the gauge needles back to the low end of their respective scales. Therefore, the gauges do not accurately indicate any vehicle condition unless the ignition switch is in the On or Start positions.

All of the EMIC gauges are air core magnetic units. Two fixed electromagnetic coils are located within each gauge. These coils are wrapped at right angles to each other around a movable permanent magnet. The movable magnet is suspended within the coils on one end of a pivot shaft, while the gauge needle is attached to the other end of the shaft. One

of the coils has a fixed current flowing through it to maintain a constant magnetic field strength. Current flow through the second coil changes, which causes changes in its magnetic field strength. The current flowing through the second coil is changed by the EMIC circuitry in response to messages received over the PCI data bus. The gauge needle moves as the movable permanent magnet aligns itself to the changing magnetic fields created around it by the electromagnets.

The gauges are diagnosed using the EMIC self-diagnostic actuator test. (Refer to 8 - ELECTRICAL/ INSTRUMENT CLUSTER - DIAGNOSIS AND TESTING). Proper testing of the PCI data bus and the electronic data bus message inputs to the EMIC that control each gauge require the use of a diagnostic scan tool. Refer to the appropriate diagnostic information. Specific operation details for each gauge may be found elsewhere in this service information.

VACUUM-FLUORESCENT DISPLAY

The Vacuum-Fluorescent Display (VFD) unit is soldered to the EMIC electronic circuit board. With the ignition switch in the Off or Accessory positions, the odometer display is activated when the driver door is opened (Rental Car mode) and is deactivated when the driver door is closed. Otherwise, the display unit is active when the ignition switch is in the On or Start positions, and inactive when the ignition switch is in the Off or Accessory positions.

The illumination intensity of the VFD unit is controlled by the EMIC circuitry based upon electronic dimming level messages received from the BCM over the PCI data bus, and is synchronized with the illumination intensity of other VFD units in the vehicle. The BCM provides dimming level messages based upon internal programming and inputs it receives from the circuitry of the multi-function switch on the steering column based upon the settings of the control knob and control ring on the left (lighting) control stalk that have been selected by the vehicle operator.

The EMIC VFD unit has several display capabilities including odometer, trip odometer, some warning or reminder indications, and various diagnostic information when certain fault conditions exist. On models equipped with the optional Electronic Vehicle Information Center (EVIC), most of the odometer VFD unit warning and reminder indications are suppressed so as not to duplicate indications that are provided by the EVIC. The odometer VFD warning and reminder messages include:

- **"door"** - indicating a door is ajar (on vehicles without the optional EVIC only).
- **"gate"** - indicating the tailgate is ajar (on vehicles without the optional EVIC only).
- **"glass"** - indicating the tailgate glass is ajar (on vehicles without the optional EVIC only).
- **"lowash"** - indicating that the washer fluid level is low (on vehicles without the optional EVIC only).
- **"no bus"** - indicating there is no PCI data bus communication detected.

An odometer/trip odometer switch on the EMIC circuit board is used to control some of the display modes. This switch is actuated manually by depressing the odometer/trip odometer switch button that extends through the lower edge of the cluster lens, just right of the tachometer. Actuating this switch momentarily with the ignition switch in the On position will toggle the VFD between the odometer and trip odometer modes. Depressing the switch button for about two seconds while the VFD is in the trip odometer mode will reset the trip odometer value to zero.

Holding this switch depressed while turning the ignition switch from the Off position to the On position will initiate the EMIC self-diagnostic actuator test. The VFD will also display the cluster software version level near the completion of the EMIC self-diagnostic actuator test. Refer to the instrument cluster diagnosis and testing service information for additional details on this cluster function. The EMIC microprocessor remembers which display mode is active when the ignition switch is turned to the Off position, and returns the VFD display to that mode when the ignition switch is turned On again.

The VFD unit is diagnosed using the EMIC self-diagnostic actuator test. (Refer to 8 - ELECTRICAL/ INSTRUMENT CLUSTER - DIAGNOSIS AND TESTING). Proper testing of the PCI data bus and the electronic data bus message inputs to the EMIC that control some of the VFD functions requires the use of a diagnostic scan tool. Refer to the appropriate diagnostic information. Specific operation details for the odometer, the trip odometer, and the various warning and reminder indicator functions of the VFD unit may be found elsewhere in this service information.

INDICATORS

Indicators are located in various positions within the EMIC and are all connected to the EMIC electronic circuit board. The turn signal indicators, security indicator, washer fluid indicator, and coolant low indicator (diesel engine only) operate based upon hard wired inputs to the EMIC. The brake indicator is controlled by PCI data bus messages from the Controller Antilock Brake (CAB) as well as by hard wired park brake switch and brake fluid level switch inputs to the EMIC. The Malfunction Indicator Lamp (MIL) is normally controlled by PCI data bus mes-

INSTRUMENT CLUSTER (Continued)

sages from the Powertrain Control Module (PCM); however, if the EMIC loses PCI data bus communication, the EMIC circuitry will automatically turn the MIL on until PCI data bus communication is restored. The EMIC uses PCI data bus messages from the Body Control Module (BCM), the Electronic Vehicle Information Center (EVIC), the PCM, the Airbag Control Module (ACM), and the CAB to control all of the remaining indicators.

The various EMIC indicators are controlled by different strategies; some receive fused ignition switch output from the EMIC circuitry and have a switched ground, others are grounded through the EMIC circuitry and have a switched battery feed, while still others are completely controlled by the EMIC microprocessor based upon various hard wired and electronic message inputs. Some indicators are illuminated at a fixed intensity, while the illumination intensity of others is synchronized with that of the EMIC general illumination lamps.

In addition, certain indicators in this instrument cluster are automatically configured or self-configured. This feature allows the configurable indicators to be enabled by the EMIC circuitry for compatibility with certain optional equipment. The ABS indicator, airbag indicator, and Tire Pressure Monitor (TPM) indicator are automatically configured by PCI data bus messages received by the EMIC from the CAB, ACM or EVIC after the EMIC is installed in the vehicle. Once these configuration settings are learned by the EMIC, a diagnostic scan tool must be used to remove these settings from the EMIC non-volatile memory. The automatically configured or self-configured indicators remain latent in each EMIC at all times and will be active only when the EMIC receives the appropriate PCI message inputs for the optional system or equipment.

The hard wired indicator inputs are diagnosed using conventional diagnostic methods. However, the EMIC circuitry and PCI bus message controlled indicators are diagnosed using the EMIC self-diagnostic actuator test. (Refer to 8 - ELECTRICAL/INSTRUMENT CLUSTER - DIAGNOSIS AND TESTING). Proper testing of the PCI data bus and the electronic message inputs to the EMIC that control an indicator requires the use of a diagnostic scan tool. Refer to the appropriate diagnostic information. Specific details of the operation for each indicator may be found elsewhere in this service information.

CLUSTER ILLUMINATION

The EMIC has several illumination lamps that provide cluster back lighting whenever the exterior lighting is turned On. The illumination intensity of these lamps is adjusted when the interior lighting control ring on the left control stalk of the multi-function switch is rotated (down to dim, up to brighten) to one of six available minor detent positions. The Body Control Module (BCM) monitors a resistor multiplexed input from the multi-function switch on a panel lamps dimmer switch mux circuit. In response to that input, the BCM provides a control output to energize the park lamp relay and transmits an electronic dimming level message to the EMIC over the Programmable Communications Interface (PCI) data bus based upon internal programming.

The EMIC receives the electronic dimming level message from the BCM, and a battery current input from the energized park lamp relay on the hard wired fused park lamp relay output. Based upon the dimming level message, the EMIC then converts the battery current input to the appropriate 12-volt Pulse Width Modulated (PWM) output. This PWM output is used to illuminate the cluster illumination lamps and the VFD unit on the EMIC circuit board, and provides a PWM output on the hard wired fused panel lamps dimmer switch signal circuit to control and synchronize the illumination intensity of other incandescent illumination lamps in the vehicle. The cluster illumination lamps are grounded at all times.

The BCM also transmits electronic dimming level messages over the PCI data bus to other electronic modules in the vehicle to control and synchronize the illumination intensity of their VFD units to that of the EMIC VFD unit. In addition, the control ring on the left (lighting) control stalk of the multi-function switch has a Parade Mode position to provide a parade or funeral mode. The BCM monitors the request for this mode from the multi-function switch, then transmits an electronic dimming level message to illuminate all VFD units in the vehicle at full (daytime) intensity for easier visibility when driving in daylight with the exterior lighting turned On.

The hard wired multi-function switch and panel lamps dimmer inputs to and outputs from the EMIC may be diagnosed using conventional diagnostic methods. However, proper testing of the PWM output of the EMIC and the electronic dimming level messages sent by the BCM over the PCI data bus requires the use of a diagnostic scan tool. Refer to the appropriate diagnostic information.

INSTRUMENT CLUSTER (Continued)

INPUT AND OUTPUT CIRCUITS

HARD WIRED INPUTS

The hard wired inputs to the EMIC include the following:

- **BCM Wake Up Input**
- **Fused B(+) - Ignition-Off Draw**
- **Fused Ignition Switch Output (Run-Start)**
- **Fused Park Lamp Relay Output**
- **Left Turn Signal**
- **Low Coolant Fluid Level Sense - with Diesel Engine**
- **Low Washer Fluid Sense**
- **Park Brake Switch Sense**
- **Red Brake Warning Indicator Driver**
- **Right Turn Signal**
- **VTSS Indicator Driver**

Refer to the appropriate wiring information for additional details.

HARD WIRED OUTPUTS

The hard wired outputs of the EMIC include the following:

- **Fused Panel Lamps Dimmer Switch Signal**

Refer to the appropriate wiring information for additional details.

GROUNDS

The EMIC receives a ground path through the following hard wired circuits:

- **Power Ground**

Refer to the appropriate wiring information for additional details.

COMMUNICATION

The EMIC has provisions for the following communication circuits:

- **PCI Data Bus**

Refer to the appropriate wiring information for additional details.

DIAGNOSIS AND TESTING

INSTRUMENT CLUSTER

If the instrument cluster general illumination lighting is inoperative, refer to CLUSTER ILLUMINATION DIAGNOSIS.

If all of the instrument cluster gauges and indicators are inoperative, be certain to check the instrument cluster fused B(+) fuse and the instrument cluster fused B(+) and ground circuits for shorts or opens. Refer to the appropriate wiring information. The wiring information includes wiring diagrams, proper wire and connector repair procedures, details of wire harness routing and retention, connector pinout information and location views for the various wire harness connectors, splices and grounds.

If an individual hard wired gauge or indicator is inoperative, refer to the diagnosis and testing service information for that specific gauge or indicator. If an individual Programmable Communications Interface (PCI) data bus message-controlled gauge or indicator is inoperative, perform the Actuator Test as follows:

ACTUATOR TEST

WARNING: To avoid personal injury or death, on vehicles equipped with airbags, disable the supplemental restraint system before attempting any steering wheel, steering column, airbag, occupant classification system, seat belt tensioner, impact sensor, or instrument panel component diagnosis or service. Disconnect and isolate the battery negative (ground) cable, then wait two minutes for the system capacitor to discharge before performing further diagnosis or service. This is the only sure way to disable the supplemental restraint system. Failure to take the proper precautions could result in accidental airbag deployment.

NOTE: The practice of exchanging (swapping) instrument clusters and other electronic modules in this vehicle with those removed from another vehicle must always be avoided. If the instrument cluster has been replaced, certain indicators in this instrument cluster will be automatically configured when the cluster is connected to the electrical system of the vehicle. This feature allows those indicators to be activated for compatibility with certain optional equipment. Some other indicators may require manual intervention to obtain proper configuration for the equipment in the specific vehicle. If the problem being diagnosed involves erroneous illumination of the ABS indicator, the airbag indicator, the Electronic Throttle Control (ETC) indicator, the Part Time indicator, the Full Time indicator or the Tire Pressure Monitor indicator when the vehicle does not have the appropriate equipment, a diagnostic scan tool must be used to manually enable or disable the correct indicator(s). Refer to the appropriate diagnostic information.

The instrument cluster actuator test will put the instrument cluster into its self-diagnostic mode. In this mode the instrument cluster can perform a self-diagnostic test that will confirm that the instrument cluster circuitry, the gauges, the PCI data bus message controlled indicators, and the chime tone transducer are capable of operating as designed. During the actuator test the instrument cluster circuitry will sound the audible tone transducer, position each of

INSTRUMENT CLUSTER (Continued)

the gauge needles at various calibration points, illuminate each of the segments in the Vacuum-Fluorescent Display (VFD) unit, and turn all of the PCI data bus message-controlled indicators on and off again.

Successful completion of the actuator test will confirm that the instrument cluster is operational. However, there may still be a problem with the PCI data bus, the Powertrain Control Module (PCM), the Airbag Control Module (ACM), the Body Control Module (BCM), the Electronic Vehicle Information Center (EVIC), the Sentry Key REmote Entry Module (SKREEM), or the inputs to one of these electronic control modules. Use a diagnostic scan tool to diagnose these components. Refer to the appropriate diagnostic information.

(1) Begin the test with the ignition switch in the Off position.

(2) Depress the odometer/trip odometer switch button.

(3) While still holding the odometer/trip odometer switch button depressed, turn the ignition switch to the On position, but do not start the engine.

(4) Release the odometer/trip odometer switch button.

(5) The instrument cluster will automatically begin the actuator test sequence, as follows:

(a) The cluster will turn on, then off again each of the PCI data bus message controlled indicators to confirm the functionality of the indicator and the cluster control circuitry:

(b) The cluster will sweep the needles for each of the gauges to several calibration points in sequence to confirm the functionality of the gauge and the cluster control circuitry:

(c) The cluster will sequentially step the odometer/trip odometer VFD unit display from all ones (111111) through all nines (999999) to confirm the functionality of all VFD unit segments and their control circuitry, then display the software version number.

(d) The cluster will generate five (5) chime tones to confirm the functionality of the audible tone transducer and the control circuitry.

(6) The actuator test is now completed. The instrument cluster will automatically exit the self-diagnostic mode and return to normal operation at the completion of the test, if the ignition switch is turned to the Off position during the test, or if an engine rpm message indicating that the engine is running is received from the PCM over the PCI data bus during the test.

(7) Go back to Step 1 to repeat the test, if required.

CLUSTER ILLUMINATION DIAGNOSIS

WARNING: To avoid personal injury or death, on vehicles equipped with airbags, disable the supplemental restraint system before attempting any steering wheel, steering column, airbag, occupant classification system, seat belt tensioner, impact sensor, or instrument panel component diagnosis or service. Disconnect and isolate the battery negative (ground) cable, then wait two minutes for the system capacitor to discharge before performing further diagnosis or service. This is the only sure way to disable the supplemental restraint system. Failure to take the proper precautions could result in accidental airbag deployment.

If the problem being diagnosed is a single inoperative illumination lamp, be certain that the bulb and bulb holder unit are properly installed in the instrument cluster electronic circuit board. If no installation problems are found, replace the faulty bulb and bulb holder unit. If all of the cluster illumination lamps are inoperative, the most reliable, efficient, and accurate means to diagnose the cluster illumination function of the instrument cluster requires the use of a diagnostic scan tool. Refer to the appropriate diagnostic information.

REMOVAL

WARNING: To avoid personal injury or death, on vehicles equipped with airbags, disable the supplemental restraint system before attempting any steering wheel, steering column, airbag, occupant classification system, seat belt tensioner, impact sensor, or instrument panel component diagnosis or service. Disconnect and isolate the battery negative (ground) cable, then wait two minutes for the system capacitor to discharge before performing further diagnosis or service. This is the only sure way to disable the supplemental restraint system. Failure to take the proper precautions could result in accidental airbag deployment.

(1) Disconnect and isolate the battery negative cable.

(2) Remove the cluster bezel from the instrument panel. (Refer to 23 - BODY/INSTRUMENT PANEL/CLUSTER BEZEL - REMOVAL).

(3) Remove the four screws that secure the instrument cluster to the instrument panel structural support (Fig. 4).

INSTRUMENT CLUSTER (Continued)

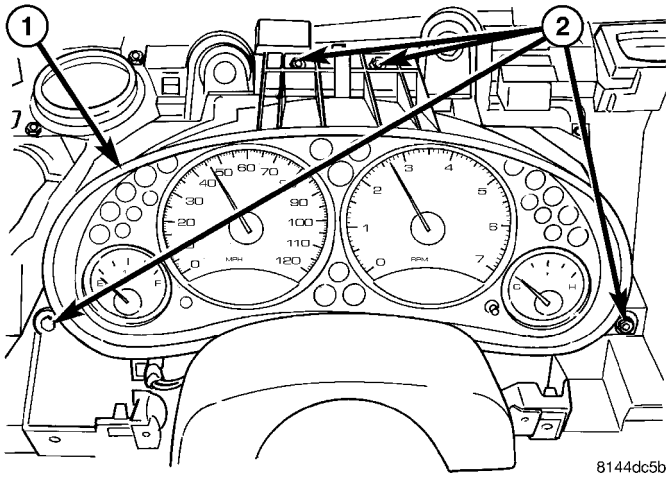

Fig. 4 Instrument Cluster Remove/Install

1 - INSTRUMENT CLUSTER
2 - SCREW (4)

(4) Pull the instrument cluster rearward far enough to access and disconnect the instrument panel wire harness connector from the connector receptacle on the back of the cluster housing.

(5) Remove the instrument cluster from the instrument panel.

DISASSEMBLY

WARNING: To avoid personal injury or death, on vehicles equipped with airbags, disable the supplemental restraint system before attempting any steering wheel, steering column, airbag, occupant classification system, seat belt tensioner, impact sensor, or instrument panel component diagnosis or service. Disconnect and isolate the battery negative (ground) cable, then wait two minutes for the system capacitor to discharge before performing further diagnosis or service. This is the only sure way to disable the supplemental restraint system. Failure to take the proper precautions could result in accidental airbag deployment.

NOTE: The incandescent instrument cluster illumination lamp bulbs (including the integral bulb holders), and the cluster lens, hood and mask unit are the only components of the instrument cluster used in this vehicle that are serviced separately. Following are the procedures for disassembling these components from the instrument cluster.

CLUSTER BULB

NOTE: This procedure applies to each of the incandescent cluster illumination lamp and bulb holder units.

(1) Disconnect and isolate the battery negative cable.

(2) Remove the instrument cluster from the instrument panel. (Refer to 8 - ELECTRICAL/INSTRUMENT CLUSTER - REMOVAL).

(3) Rotate the bulb holder counterclockwise about sixty degrees on the instrument cluster circuit board (Fig. 5).

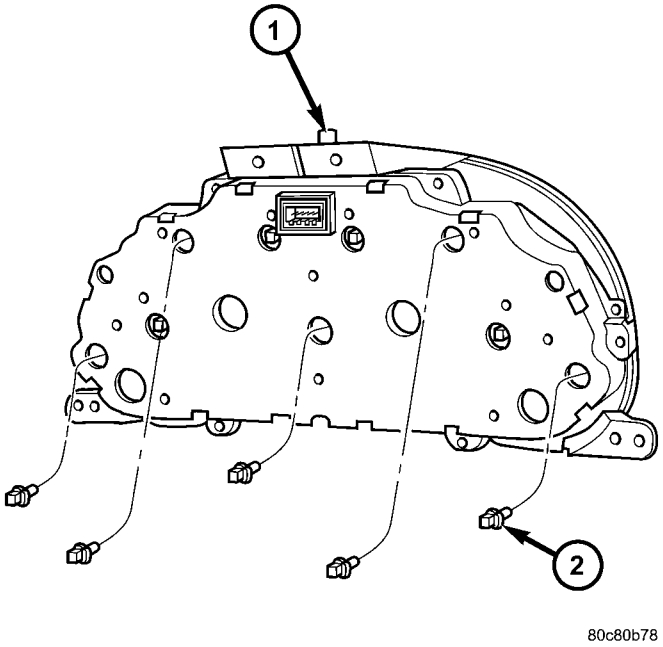

Fig. 5 Cluster Bulb Remove/Install

1 - INSTRUMENT CLUSTER
2 - BULB & HOLDER (9)

(4) Pull the bulb and bulb holder straight out of the circuit board.

CLUSTER LENS, HOOD, AND MASK

(1) Disconnect and isolate the battery negative cable.

(2) Remove the instrument cluster from the instrument panel. (Refer to 8 - ELECTRICAL/INSTRUMENT CLUSTER - REMOVAL).

(3) From the back of the instrument cluster, remove the six screws that secure the rear cover and the lens, hood, and mask unit to the cluster housing (Fig. 6).

(4) Remove the lens, hood, and mask unit from the face of the instrument cluster.

INSTRUMENT CLUSTER (Continued)

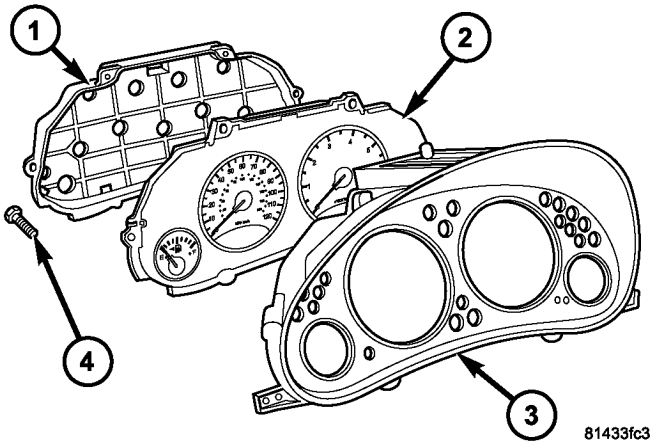

Fig. 6 Instrument Cluster Components

1 - REAR COVER
2 - CLUSTER HOUSING
3 - LENS, HOOD & MASK
4 - SCREW (6)

ASSEMBLY

WARNING: To avoid personal injury or death, on vehicles equipped with airbags, disable the supplemental restraint system before attempting any steering wheel, steering column, airbag, occupant classification system, seat belt tensioner, impact sensor, or instrument panel component diagnosis or service. Disconnect and isolate the battery negative (ground) cable, then wait two minutes for the system capacitor to discharge before performing further diagnosis or service. This is the only sure way to disable the supplemental restraint system. Failure to take the proper precautions could result in accidental airbag deployment.

NOTE: The incandescent instrument cluster illumination lamp bulbs (including the integral bulb holders), and the cluster lens, hood and mask unit are the only components of the instrument cluster used in this vehicle that are serviced separately. Following are the procedures for disassembling these components from the instrument cluster.

CLUSTER BULB

CAUTION: Always use the correct bulb size and type for replacement. An incorrect bulb size or type may overheat and cause damage to the instrument cluster, the electronic circuit board and/or the gauges.

NOTE: This procedure applies to each of the incandescent cluster illumination lamp and bulb holder units.

(1) Align the bulb holder and bulb with the keyed opening in the circuit board of the instrument cluster (Fig. 5).

(2) Insert the bulb holder and bulb straight into the circuit board until the bulb holder is firmly seated.

(3) Rotate the bulb holder clockwise about thirty degrees on the circuit board to lock it into place.

(4) Reinstall the instrument cluster onto the instrument panel. (Refer to 8 - ELECTRICAL/INSTRUMENT CLUSTER - INSTALLATION).

(5) Reconnect the battery negative cable.

CLUSTER LENS, HOOD, AND MASK

(1) Position the cluster lens, hood, and mask unit over the face of the instrument cluster (Fig. 6). Be certain that the odometer/trip odometer switch button is inserted through the proper clearance holes in the mask and the lens.

(2) From the back of the instrument cluster, install and tighten the six screws that secure the rear cover and the lens, hood, and mask unit to the cluster housing. Tighten the screws to 1 N·m (10 in. lbs.).

(3) Reinstall the instrument cluster onto the instrument panel. (Refer to 8 - ELECTRICAL/INSTRUMENT CLUSTER - INSTALLATION).

(4) Reconnect the battery negative cable.

INSTALLATION

WARNING: To avoid personal injury or death, on vehicles equipped with airbags, disable the supplemental restraint system before attempting any steering wheel, steering column, airbag, occupant classification system, seat belt tensioner, impact sensor, or instrument panel component diagnosis or service. Disconnect and isolate the battery negative (ground) cable, then wait two minutes for the system capacitor to discharge before performing further diagnosis or service. This is the only sure way to disable the supplemental restraint system. Failure to take the proper precautions could result in accidental airbag deployment.

(1) Position the instrument cluster close enough to the instrument panel to reconnect the instrument panel wire harness connector to the connector receptacle on the back of the cluster housing.

(2) Position the instrument cluster into the instrument panel.

(3) Install and tighten the four screws that secure the instrument cluster to the instrument panel (Fig. 4). Tighten the screws to 2 N·m (17 in. lbs.).

INSTRUMENT CLUSTER (Continued)

(4) Reinstall the cluster bezel onto the instrument panel. (Refer to 23 - BODY/INSTRUMENT PANEL/ CLUSTER BEZEL - INSTALLATION).

(5) Reconnect the battery negative cable.

NOTE: If the instrument cluster has been replaced, certain indicators in this instrument cluster will be automatically configured when the cluster is connected to the electrical system of the vehicle. This feature allows those indicators to be activated for compatibility with certain optional equipment. Some other indicators may require manual intervention to obtain proper configuration for the equipment in the specific vehicle. If a problem is noted involving erroneous illumination of the ABS indicator, the airbag indicator, the electronic throttle control indicator, the Part Time indicator or the Full Time indicator when the vehicle does not have the appropriate equipment, a diagnostic scan tool must be used to manually enable or disable the correct indicator(s). Refer to the appropriate diagnostic information.

ABS INDICATOR

DESCRIPTION

Fig. 7 ABS Indicator

An Antilock Brake System (ABS) indicator is standard equipment on all instrument clusters (Fig. 7). However, the instrument cluster is programmed to automatically enable this indicator only on vehicles equipped with the optional antilock brake system. This indicator is located above the engine temperature gauge and to the right of the tachometer in the instrument cluster.

The ABS indicator consists of a stencil-like cutout of the International Control and Display Symbol icon for “Failure of Anti-lock Braking System” in the opaque layer of the instrument cluster overlay. The dark outer layer of the overlay prevents the indicator from being clearly visible when it is not illuminated. An amber Light Emitting Diode (LED) behind the cutout in the opaque layer of the overlay causes the icon to appear in amber through the translucent outer layer of the overlay when the indicator is illuminated from behind by the LED, which is soldered onto the instrument cluster electronic circuit board. The ABS indicator is serviced as a unit with the instrument cluster.

OPERATION

The ABS indicator gives an indication to the vehicle operator when the ABS system is faulty or inoperative. This indicator is controlled by a transistor on the instrument cluster circuit board based upon cluster programming and electronic messages received by the cluster from the Controller Antilock Brake (CAB) over the Programmable Communications Interface (PCI) data bus.

The ABS indicator Light Emitting Diode (LED) is completely controlled by the instrument cluster logic circuit, and that logic will only allow this indicator to operate when the instrument cluster receives a battery current input on the fused ignition switch output (run-start) circuit. Therefore, the LED will always be off when the ignition switch is in any position except On or Start. The LED only illuminates when it is provided a path to ground by the instrument cluster transistor. The instrument cluster will turn on the ABS indicator for the following reasons:

- **Bulb Test** - Each time the ignition switch is turned to the On position the ABS indicator is illuminated by the cluster for about three seconds as a bulb test.
- **ABS Lamp-On Message** - Each time the cluster receives a lamp-on message from the CAB, the ABS indicator will be illuminated. The indicator remains illuminated until the cluster receives a lamp-off message from the CAB, or until the ignition switch is turned to the Off position, whichever occurs first.
- **Communication Error** - If the cluster receives no lamp-on or lamp-off messages from the CAB for six consecutive seconds, the ABS indicator is illuminated. The indicator remains illuminated until the cluster receives a valid message from the CAB, or until the ignition switch is turned to the Off position, whichever occurs first.
- **Actuator Test** - Each time the instrument cluster is put through the actuator test, the ABS indicator will be turned on, then off again during the bulb check portion of the test to confirm the functionality of the LED and the cluster control circuitry.
- **ABS Diagnostic Test** - The ABS indicator is blinked on and off by lamp-on and lamp-off messages from the CAB during the performance of the ABS diagnostic tests.

The CAB continually monitors the ABS circuits and sensors to decide whether the system is in good operating condition. The CAB then sends the proper lamp-on or lamp-off messages to the instrument cluster. If the CAB sends a lamp-on message after the bulb test, it indicates that the CAB has detected a system malfunction and/or that the ABS system has become inoperative. The CAB will store a Diagnostic Trouble Code (DTC) for any malfunction it detects.

ABS INDICATOR (Continued)

Each time the ABS indicator fails to light due to an open or short in the cluster ABS indicator circuit, the cluster sends a message notifying the CAB of the condition, then the instrument cluster and the CAB will each store a DTC.

For proper diagnosis of the antilock brake system, the CAB, the PCI data bus, or the electronic message inputs to the instrument cluster that control the ABS indicator, a diagnostic scan tool is required. Refer to the appropriate diagnostic information.

AIRBAG INDICATOR

DESCRIPTION

AIR
BAG

Fig. 8 Airbag Indicator

An airbag indicator is standard equipment on all instrument clusters (Fig. 8). However, the instrument cluster is programmed to automatically enable this indicator only on vehicles equipped with the airbag system, which is not available in some markets. The indicator is located above the fuel gauge and to the left of the speedometer in the instrument cluster.

The airbag indicator consists of a stencil-like cutout of the text “AIR BAG” in the opaque layer of the instrument cluster overlay. The dark outer layer of the overlay prevents the indicator from being clearly visible when it is not illuminated. A red Light Emitting Diode (LED) behind the cutout in the opaque layer of the overlay causes the “AIR BAG” text to appear in red through the translucent outer layer of the overlay when the indicator is illuminated from behind by the LED, which is soldered onto the instrument cluster electronic circuit board. The airbag indicator is serviced as a unit with the instrument cluster.

OPERATION

The airbag indicator gives an indication to the vehicle operator when the airbag system is faulty or inoperative. The airbag indicator is controlled by a transistor on the instrument cluster circuit board based upon cluster programming and electronic messages received by the cluster from the Airbag Control Module (ACM) over the Programmable Communications Interface (PCI) data bus.

The airbag indicator Light Emitting Diode (LED) is completely controlled by the instrument cluster logic circuit, and that logic will only allow this indicator to operate when the instrument cluster receives a battery current input on the fused ignition switch output (run-start) circuit. Therefore, the LED will always be off when the ignition switch is in any position except On or Start. The LED only illuminates when it is provided a path to ground by the instrument cluster transistor. The instrument cluster will turn on the airbag indicator for the following reasons:

- **Bulb Test** - Each time the ignition switch is turned to the On position the airbag indicator is illuminated for about six seconds. The entire bulb test is a function of the ACM.
- **ACM Lamp-On Message** - Each time the cluster receives a lamp-on message from the ACM, the airbag indicator will be illuminated. The indicator remains illuminated for about twelve seconds or until the cluster receives a lamp-off message from the ACM, whichever is longer.
- **Communication Error** - If the cluster receives no airbag messages for six consecutive seconds, the airbag indicator is illuminated. The indicator remains illuminated until the cluster receives a single lamp-off message from the ACM.
- **Actuator Test** - Each time the cluster is put through the actuator test, the airbag indicator will be turned on, then off again during the bulb check portion of the test to confirm the functionality of the LED and the cluster control circuitry. The actuator test illumination of the airbag indicator is a function of the instrument cluster.

The ACM continually monitors the airbag system circuits and sensors to decide whether the system is in good operating condition. The ACM then sends the proper lamp-on or lamp-off messages to the instrument cluster. If the ACM sends a lamp-on message after the bulb test, it indicates that the ACM has detected a system malfunction and/or that the airbags and seat belt tensioners may not deploy when required, or may deploy when not required. The ACM will store a Diagnostic Trouble Code (DTC) for any malfunction it detects. Each time the airbag indicator fails to illuminate due to an open or short in the cluster airbag indicator circuit, the cluster sends a message notifying the ACM of the condition, then the instrument cluster and the ACM will each store a DTC.

For proper diagnosis of the airbag system, the ACM, the PCI data bus, or the electronic message inputs to the instrument cluster that control the airbag indicator, a diagnostic scan tool is required. Refer to the appropriate diagnostic information.

BRAKE/PARK BRAKE INDICATOR

DESCRIPTION

Fig. 9 Brake Indicator

A brake indicator is standard equipment on all instrument clusters (Fig. 9). This indicator is located near the lower edge of the speedometer gauge dial face in the instrument cluster.

The brake indicator consists of stencil-like cutouts of the text “BRAKE” and the International Control and Display Symbol icon for “Brake Failure” in the opaque layer of the instrument cluster overlay. The dark outer layer of the overlay prevents the indicator from being clearly visible when it is not illuminated. A red Light Emitting Diode (LED) behind the cutout in the opaque layer of the overlay causes the “BRAKE” text and the icon to appear in red through the translucent outer layer of the overlay when the indicator is illuminated from behind by the LED, which is soldered onto the instrument cluster electronic circuit board. The brake indicator is serviced as a unit with the instrument cluster.

OPERATION

The brake indicator gives an indication to the vehicle operator when the parking brake is applied, when there are certain brake hydraulic system malfunctions as indicated by a low brake hydraulic fluid level condition, or when the brake fluid level switch is disconnected. On models equipped with an optional Antilock Brake System (ABS), the brake indicator can also give an indication when certain faults are detected in the ABS. This indicator is controlled by a transistor on the instrument cluster circuit board based upon cluster programming, electronic messages received by the cluster from the Controller Antilock Brake (CAB) over the Programmable Communications Interface (PCI) data bus (ABS only), and hard wired inputs from the park brake switch and the brake fluid level switch.

The brake indicator Light Emitting Diode (LED) is completely controlled by the instrument cluster logic circuit, and that logic will only allow this indicator to operate when the instrument cluster receives a battery current input on the fused ignition switch output (run-start) circuit. Therefore, the LED will always be off when the ignition switch is in any position except On or Start. The LED only illuminates when it is provided a path to ground by the instrument cluster transistor. The instrument cluster will turn on the brake indicator for the following reasons:

- **Bulb Test** - Each time the ignition switch is turned to the On position the brake indicator is illuminated by the instrument cluster for about three seconds as a bulb test.
- **Brake Lamp-On Message** - Each time the cluster receives a lamp-on message from the CAB, the brake indicator will be illuminated. The indicator remains illuminated until the cluster receives a lamp-off message from the CAB, or until the ignition switch is turned to the Off position, whichever occurs first.
- **Park Brake Switch Input** - Each time the cluster detects ground on the park brake switch sense circuit (park brake switch closed = park brake applied or not fully released) while the ignition switch is in the On position, the brake indicator is illuminated. The indicator remains illuminated until the park brake switch sense input to the cluster is an open circuit (park brake switch open = park brake fully released), or until the ignition switch is turned to the Off position, whichever occurs first.
- **Brake Fluid Level Switch Input** - Each time the cluster detects ground on the red brake warning indicator driver circuit (brake fluid level switch closed = brake hydraulic system fluid level low) while the ignition switch is in the On position, the brake indicator is illuminated. The indicator remains illuminated until the status of the red brake warning indicator driver input to the cluster is off (brake fluid level switch off = brake hydraulic system fluid level is not low), or until the ignition switch is turned to the Off position, whichever occurs first.
- **Brake Fluid Level Switch Input Fault** - The brake fluid level switch also features a 1 kilohm diagnostic resistor connected in parallel between the switch input and output to provide the cluster with verification that the red brake warning indicator driver circuit is not open. If the cluster does not see a proper input on the red brake warning indicator driver circuit while the ignition switch is in the On position, it will turn on the brake indicator. The indicator remains illuminated until the red brake warning indicator driver circuit fault is resolved, or until the ignition switch is turned to the Off position, whichever occurs first.
- **Actuator Test** - Each time the instrument cluster is put through the actuator test, the brake indicator will be turned on, then off again during the bulb check portion of the test to confirm the functionality of the LED and the cluster control circuitry.

The park brake switch on the park brake pedal mechanism provides a hard wired ground input to the instrument cluster circuitry through the park brake switch sense circuit whenever the park brake

BRAKE/PARK BRAKE INDICATOR (Continued)

is applied or not fully released. The brake fluid level switch on the brake master cylinder reservoir provides a hard wired ground input to the instrument cluster circuitry through the red brake warning indicator driver circuit whenever the fluid level in the reservoir becomes low. On models equipped with the optional ABS system, the CAB continually monitors the ABS system circuits and sensors to decide whether the system is in good operating condition. The CAB then sends the proper lamp-on or lamp-off messages to the instrument cluster. If the CAB sends a lamp-on message after the bulb test, it indicates that the CAB has detected a brake hydraulic system malfunction and/or that the ABS system has become inoperative. The CAB will store a Diagnostic Trouble Code (DTC) for any malfunction it detects.

For further diagnosis of the brake indicator or the instrument cluster circuitry that controls the LED, (Refer to 8 - ELECTRICAL/INSTRUMENT CLUSTER - DIAGNOSIS AND TESTING). The park brake switch input to the instrument cluster may be diagnosed using conventional diagnostic tools and methods. Refer to the appropriate wiring information. For proper diagnosis of the brake fluid level switch, the ABS, the CAB, the PCI data bus, or the electronic message inputs to the instrument cluster that control the brake indicator, a diagnostic scan tool is required. Refer to the appropriate diagnostic information.

CHARGING INDICATOR

DESCRIPTION

Fig. 10 Charging Indicator

A charging indicator is standard equipment on all instrument clusters (Fig. 10). This indicator is located above the engine temperature gauge and to the right of the tachometer in the instrument cluster.

The charging indicator consists of a stencil-like cutout of the International Control and Display Symbol icon for “Battery Charging Condition” in the opaque layer of the instrument cluster overlay. The dark outer layer of the overlay prevents the indicator from being clearly visible when it is not illuminated. A red Light Emitting Diode (LED) behind the cutout in the opaque layer of the overlay causes the icon to appear in red through the translucent outer layer of the overlay when the indicator is illuminated from behind by the LED, which is soldered onto the instrument cluster electronic circuit board. The charging indicator is serviced as a unit with the instrument cluster.

OPERATION

The charging indicator gives an indication to the vehicle operator when the electrical system voltage is too low or too high. This indicator is controlled by a transistor on the instrument cluster circuit board based upon cluster programming and electronic messages received by the cluster from the Powertrain Control Module (PCM) over the Programmable Communications Interface (PCI) data bus.

The charging indicator Light Emitting Diode (LED) is completely controlled by the instrument cluster logic circuit, and that logic will only allow this indicator to operate when the instrument cluster receives a battery current input on the fused ignition switch output (run-start) circuit. Therefore, the LED will always be off when the ignition switch is in any position except On or Start. The LED only illuminates when it is provided a path to ground by the instrument cluster transistor. The instrument cluster will turn on the charging indicator for the following reasons:

- **Bulb Test** - Each time the ignition switch is turned to the On position the charging indicator is illuminated by the instrument cluster for about three seconds as a bulb test.
- **Charge Fail Message** - Each time the cluster receives a charge fail message from the PCM (system voltage is nine volts or lower), the charging indicator will be illuminated. The indicator remains illuminated until the cluster receives a message from the PCM indicating there is no charge fail condition (system voltage is twelve volts or higher, but lower than sixteen volts), or until the ignition switch is turned to the Off position, whichever occurs first.
- **Voltage High Message** - Each time the cluster receives a message from the PCM indicating a voltage high condition (system voltage is sixteen volts or higher), the charging indicator will be illuminated. The indicator remains illuminated until the cluster receives a message from the PCM indicating there is no voltage high condition (system voltage is lower than sixteen volts, but higher than nine volts), or until the ignition switch is turned to the Off position, whichever occurs first.
- **Actuator Test** - Each time the cluster is put through the actuator test, the charging indicator will be turned on, then off again during the bulb check portion of the test to confirm the functionality of the LED and the cluster control circuitry.

The PCM continually monitors the electrical system voltage to control the generator output. The PCM then sends the proper system voltage messages to the instrument cluster. If the instrument cluster turns on the indicator after the bulb test, it may indicate that the charging system requires service. For further diagnosis of the charging indicator or the

CHARGING INDICATOR (Continued)

instrument cluster circuitry that controls the indicator, (Refer to 8 - ELECTRICAL/INSTRUMENT CLUSTER - DIAGNOSIS AND TESTING).

For proper diagnosis of the charging system, the PCI data bus, or the electronic message inputs to the instrument cluster that control the charging indicator, a diagnostic scan tool is required. Refer to the appropriate diagnostic information.

COOLANT LOW INDICATOR

DESCRIPTION

Fig. 11 Coolant Low Indicator

A coolant low indicator is only found in the instrument clusters of vehicles equipped with an optional diesel engine (Fig. 11). This indicator is located near the lower edge of the instrument cluster, between the tachometer and the speedometer.

The coolant low indicator consists of a stencil-like cutout of the International Control and Display Symbol icon for “Low Engine Coolant” in the opaque layer of the instrument cluster overlay. The dark outer layer of the overlay prevents the indicator from being clearly visible when it is not illuminated. An amber Light Emitting Diode (LED) behind the cutout in the opaque layer of the overlay causes the icon to appear in amber through the translucent outer layer of the overlay when the indicator is illuminated from behind by the LED, which is soldered onto the instrument cluster electronic circuit board. The coolant low indicator is serviced as a unit with the instrument cluster.

OPERATION

The coolant low indicator gives an indication to the vehicle operator when the diesel engine coolant level is low. This indicator is controlled by a transistor on the instrument cluster circuit board based upon cluster programming and a hard wired input received by the cluster from the engine coolant level switch.

The coolant low indicator Light Emitting Diode (LED) is completely controlled by the instrument cluster logic circuit, and that logic will only allow this indicator to operate when the instrument cluster receives a battery current input on the fused ignition switch output (run-start) circuit. Therefore, the LED will always be off when the ignition switch is in any position except On or Start. The LED only illuminates when it is provided a path to ground by the instrument cluster transistor. The instrument cluster will turn on the coolant low indicator for the following reasons:

- **Bulb Test** - Each time the ignition switch is turned to the On position the coolant low indicator is illuminated for about three seconds as a bulb test.
- **Engine Coolant Level Switch Input** - Each time the cluster detects ground on the low coolant fluid level sense circuit (engine coolant level switch closed = engine coolant level low) while the ignition switch is in the On position, the cluster applies an algorithm to ensure that the input is correct and not the result of coolant sloshing in the coolant bottle. The cluster tests the status of the circuit about seven milliseconds after ignition On, and about once every second thereafter, then uses an internal counter to count up or down. When the counter accumulates thirty ground inputs on the circuit, the coolant low indicator will be illuminated. The indicator remains illuminated until the low coolant fluid level sense input to the cluster is an open circuit (engine coolant level switch open = engine coolant level full), or until the ignition switch is turned to the Off position, whichever occurs first.
- **Engine Coolant Level Switch Input Fault** - The engine coolant level switch also features a 3.3 kilohm diagnostic resistor connected in parallel between the switch input and output to provide the cluster with verification that the low coolant fluid level sense circuit is not open or shorted. If the cluster does not see a proper input on the low coolant fluid level sense circuit, it will suspend coolant low indicator operation. The indicator operation remains suspended until the low coolant fluid level sense circuit fault is resolved.
- **Actuator Test** - Each time the cluster is put through the actuator test, the coolant low indicator will be turned on, then off again during the bulb check portion of the test to confirm the functionality of the LED and the cluster control circuitry.

The engine coolant level switch on the coolant bottle provides a hard wired ground input to the instrument cluster circuitry through the low coolant fluid level sense circuit whenever the level of the coolant in the bottle is low. For further diagnosis of the coolant low indicator or the instrument cluster circuitry that controls the LED, (Refer to 8 - ELECTRICAL/INSTRUMENT CLUSTER - DIAGNOSIS AND TESTING).

For proper diagnosis of the engine coolant level switch input to the instrument cluster that controls the coolant low indicator, a diagnostic scan tool is required. Refer to the appropriate diagnostic information.

CRUISE INDICATOR

DESCRIPTION

CRUISE

Fig. 12 Cruise Indicator

A cruise indicator is standard equipment on all instrument clusters (Fig. 12). However, on vehicles not equipped with the optional speed control system, this indicator is electronically disabled. This indicator is located within the odometer/trip odometer Vacuum Fluorescent Display (VFD) unit.

The cruise indicator consists of the text “CRUISE” in the lower portion of the odometer VFD unit. The odometer VFD is soldered onto the instrument cluster electronic circuit board, and is visible through a window with a smoked clear lens located on the lower edge of the tachometer gauge dial face of the cluster overlay. The dark lens over the VFD prevents the indicator from being clearly visible when it is not illuminated. The “CRUISE” text appears in a blue-green color and at the same lighting level as the odometer/trip odometer information when it is illuminated by the instrument cluster electronic circuit board. The cruise indicator is serviced as a unit with the VFD in the instrument cluster.

OPERATION

The cruise indicator gives an indication to the vehicle operator when the speed control system is turned On, regardless of whether the speed control is engaged. This indicator is controlled by the instrument cluster circuit board based upon cluster programming and electronic messages received by the cluster from the Powertrain Control Module (PCM) over the Programmable Communications Interface (PCI) data bus.

The cruise indicator is completely controlled by the instrument cluster logic circuit, and that logic will only allow this indicator to operate when the instrument cluster receives a battery current input on the fused ignition switch output (run-start) circuit. Therefore, the indicator will always be off when the ignition switch is in any position except On or Start. The indicator only illuminates when it is switched to ground by the instrument cluster logic circuit. The instrument cluster will turn on the cruise indicator for the following reasons:

- **Cruise Lamp-On Message** - Each time the cluster receives a cruise lamp-on message from the PCM indicating the speed control system has been turned On, the cruise indicator is illuminated. The indicator remains illuminated until the cluster receives a cruise lamp-off message from the PCM or until the ignition switch is turned to the Off position, whichever occurs first.
- **Actuator Test** - Each time the cluster is put through the actuator test, the cruise indicator will be turned on, then off again during the VFD portion of the test in order to confirm the functionality of the VFD and the cluster control circuitry.

The PCM continually monitors the speed control switches to determine the appropriate outputs to the speed control servo. The PCM then sends the proper cruise indicator lamp-on and lamp-off messages to the instrument cluster. For further diagnosis of the cruise indicator or the instrument cluster circuitry that controls the indicator, (Refer to 8 - ELECTRICAL/INSTRUMENT CLUSTER - DIAGNOSIS AND TESTING).

For proper diagnosis of the speed control system, the PCM, the PCI data bus, or the electronic message inputs to the instrument cluster that control the cruise indicator, a diagnostic scan tool is required. Refer to the appropriate diagnostic information.

DOOR AJAR INDICATOR

DESCRIPTION

door

Fig. 13 Door Ajar Indicator

A door ajar indicator is standard equipment on all instrument clusters (Fig. 13). This indicator is located within the odometer/trip odometer Vacuum Fluorescent Display (VFD) unit. However, on models equipped with the optional Electronic Vehicle Information Center (EVIC) the door ajar indicator in the odometer VFD is electronically suppressed so as not to duplicate indications that are provided by the EVIC.

The door ajar indicator consists of the text “door”, which appears in place of the odometer/trip odometer information in the odometer VFD unit. The odometer VFD is soldered onto the cluster electronic circuit board, and is visible through a window with a smoked clear lens located on the lower edge of the tachometer gauge dial face of the cluster overlay. The dark lens over the VFD prevents the indicator from being clearly visible when it is not illuminated. The “door” text appears in the same blue-green color and at the same lighting level as the odometer/trip odometer information when it is illuminated by the instrument cluster electronic circuit board. The door ajar indicator is serviced as a unit with the VFD in the instrument cluster.

DOOR AJAR INDICATOR (Continued)

OPERATION

The door ajar indicator gives an indication to the vehicle operator that one or more of the passenger compartment doors may be open or not completely latched. This indicator is controlled by the instrument cluster logic circuit based upon cluster programming and electronic messages received by the cluster from the Body Control Module (BCM) over the Programmable Communications Interface (PCI) data bus.

The door ajar indicator function of the Vacuum Fluorescent Display (VFD) is completely controlled by the instrument cluster logic circuit, and that logic will only allow this indicator to operate when the instrument cluster receives a battery current input on the fused ignition switch output (run-start) circuit. Therefore, the VFD door ajar indication will always be off when the ignition switch is in any position except On or Start. The instrument cluster will turn on the door ajar indicator for the following reasons:

- **Door Ajar Lamp-On Message** - Each time the cluster receives a door ajar lamp-on message from the BCM indicating that a door is open or not completely latched, the door ajar indicator will be illuminated. If the ignition switch is in the On position and the vehicle is not moving when the door ajar lamp-on message is received, the VFD will repeatedly and sequentially cycle the door ajar indication in two second intervals with the odometer/trip odometer information and any other active warnings including: gate ajar, glass ajar, and low washer fluid. If the vehicle is moving, or once the cluster of a non-moving vehicle receives an electronic vehicle speed message from the Powertrain Control Module (PCM) indicating a speed greater than zero, the warning sequence will consist of three complete display cycles with an audible single chime tone accompanying each cycle, then revert to only the visual door ajar indication and odometer/trip odometer display cycling until the door ajar switch is cycled. The door ajar indicator will also be extinguished when the cluster receives a door ajar lamp-off message from the BCM, or if the ignition switch is turned to the Off position, whichever occurs first.

The BCM continually monitors the door ajar switches to determine the status of the doors. The BCM then sends the proper door ajar lamp-on and lamp-off messages to the instrument cluster. For further diagnosis of the door ajar indicator or the instrument cluster circuitry that controls the indicator, (Refer to 8 - ELECTRICAL/INSTRUMENT CLUSTER - DIAGNOSIS AND TESTING).

For proper diagnosis of the door ajar switches and circuits, the BCM, the PCI data bus, or the electronic message inputs to the instrument cluster that control the door ajar indicator, a diagnostic scan tool is required. Refer to the appropriate diagnostic information.

ENGINE TEMPERATURE GAUGE

DESCRIPTION

Fig. 14 Engine Coolant Temperature Icon

An engine coolant temperature gauge is standard equipment on all instrument clusters. This gauge is located in the lower right corner of the instrument cluster, to the right of the tachometer. This gauge consists of a movable gauge needle or pointer controlled by the instrument cluster circuitry and a fixed 90 degree scale on the cluster overlay that reads left-to-right from “C” (or Cold) to “H” (or Hot) for all engines. An International Control and Display Symbol icon for “Engine Coolant Temperature” is located on the cluster overlay, in the center of the gauge directly above the hub of the gauge needle (Fig. 14).

The engine coolant temperature gauge text and graphics are white against a black field, while the major and minor scale increments are black against a silver field, except for a pair of red zone increments at the far right (Hot) end of the gauge scale. All text, graphics and increments are clearly visible within the instrument cluster in daylight. When illuminated from behind by the panel lamps dimmer controlled cluster illumination lighting with the exterior lamps turned On, the white text and graphics and the major black increments appear blue-green, while the major red increments still appear red. The minor increments are not illuminated. The red gauge needle is internally illuminated.

Gauge illumination is provided by replaceable incandescent bulb and bulb holder units located on the instrument cluster electronic circuit board. The engine coolant temperature gauge is serviced as a unit with the instrument cluster.

OPERATION

The engine coolant temperature gauge gives an indication to the vehicle operator of the engine coolant temperature. This gauge is controlled by the instrument cluster circuit board based upon cluster programming and electronic messages received by the cluster from the Powertrain Control Module (PCM) over the Programmable Communications Interface (PCI) data bus.

ENGINE TEMPERATURE GAUGE (Continued)

The engine coolant temperature gauge is an air core magnetic unit that receives battery current on the instrument cluster electronic circuit board through the fused ignition switch output (run-start) circuit whenever the ignition switch is in the On or Start positions. The cluster is programmed to move the gauge needle back to the low end of the scale after the ignition switch is turned to the Off position. The instrument cluster circuitry controls the gauge needle position and provides the following features:

- **Engine Temperature Normal Message** - Each time the cluster receives a message from the PCM indicating the engine coolant temperature is within the normal operating range [up to about 124° C (255° F) for gasoline engines, or about 110° C (230° F) for diesel engines], the gauge needle is moved to the actual relative temperature position on the gauge scale.
- **Engine Temperature High Message** - Each time the cluster receives a message from the PCM indicating the engine coolant temperature is high [above about 127° C (260° F) for gasoline engines, or 112° C (233° F) for diesel engines], the gauge needle is moved into the center of the red warning zone on the gauge scale.
- **Engine Temperature Critical Message** - Each time the cluster receives a message from the PCM indicating the engine coolant temperature is critical [above about 132° C (269° F) for gasoline engines, or 115° C (239° F) for diesel engines], the gauge needle is moved to the high end of the red warning zone on the gauge scale.
- **Actuator Test** - Each time the cluster is put through the actuator test, the engine coolant temperature gauge needle will be swept to several gauge calibration points on the gauge scale in a prescribed sequence in order to confirm the functionality of the gauge and the cluster control circuitry.

The PCM continually monitors the engine coolant temperature sensor to determine the engine operating temperature. The PCM then sends the proper engine coolant temperature messages to the instrument cluster. For further diagnosis of the engine coolant temperature gauge or the instrument cluster circuitry that controls the gauge, (Refer to 8 - ELECTRICAL/INSTRUMENT CLUSTER - DIAGNOSIS AND TESTING). If the instrument cluster moves the engine coolant temperature gauge needle to indicate a high or critical engine temperature, it may indicate that the engine or the engine cooling system requires service.

For proper diagnosis of the engine coolant temperature sensor, the PCM, the PCI data bus, or the electronic message inputs to the instrument cluster that control the engine coolant temperature gauge, a diagnostic scan tool is required. Refer to the appropriate diagnostic information.

ETC INDICATOR

DESCRIPTION

Fig. 15 Electronic Throttle Control Indicator

An Electronic Throttle Control (ETC) indicator is standard equipment on all instrument clusters (Fig. 15). However, on vehicles not equipped with the optional diesel engine, this indicator is electronically disabled. This indicator is located above the fuel gauge and to the left of the speedometer in the instrument cluster.

The ETC indicator consists of a stencil-like cutout of the International Control and Display Symbol icon for “Electronic Throttle Control” in the opaque layer of the instrument cluster overlay. The dark outer layer of the overlay prevents the indicator from being clearly visible when it is not illuminated. A red Light Emitting Diode (LED) behind the cutout in the opaque layer of the overlay causes the icon to appear in red through the translucent outer layer of the overlay when the indicator is illuminated from behind by the LED, which is soldered onto the instrument cluster electronic circuit board. The ETC indicator is serviced as a unit with the instrument cluster.

OPERATION

The Electronic Throttle Control (ETC) indicator gives an indication to the vehicle operator when the ETC system is faulty or inoperative. The ETC indicator is controlled by a transistor on the instrument cluster circuit board based upon cluster programming and electronic messages received by the cluster from the Powertrain Control Module (PCM) over the Programmable Communications Interface (PCI) data bus.

The ETC indicator Light Emitting Diode (LED) is completely controlled by the instrument cluster logic circuit, and that logic will only allow this indicator to operate when the instrument cluster receives a battery current input on the fused ignition switch output (run-start) circuit. Therefore, the LED will always be off when the ignition switch is in any position except On or Start. The LED only illuminates when it is provided a path to ground by the instrument cluster transistor. The instrument cluster will turn on the ETC indicator for the following reasons:

ETC INDICATOR (Continued)

- **Bulb Test** - Each time the ignition switch is turned to the On position the ETC indicator is illuminated for about fifteen seconds. The entire bulb test is a function of the PCM.
- **ETC Lamp-On Message** - Each time the cluster receives a lamp-on message from the PCM, the ETC indicator will be illuminated. The indicator can be flashed on and off, or illuminated solid, as dictated by the PCM message. The indicator remains illuminated solid or continues to flash for about twelve seconds or until the cluster receives a lamp-off message from the PCM, whichever is longer. If the indicator is illuminated solid with the engine running the vehicle will usually remain drivable. If the indicator is flashing with the engine running the vehicle may require towing. A flashing indicator means the ETC system requires immediate service.
- **Communication Error** - If the cluster receives no lamp-on or lamp-off message from the PCM for twenty consecutive seconds, the MIL is illuminated by the instrument cluster. The indicator remains controlled and illuminated by the cluster until a valid lamp-on or lamp-off message is received from the PCM.
- **Actuator Test** - Each time the cluster is put through the actuator test, the ETC indicator will be turned on, then off again during the bulb check portion of the test to confirm the functionality of the LED and the cluster control circuitry. The actuator test illumination of the ETC indicator is a function of the PCM.

The PCM continually monitors the ETC system circuits and sensors to decide whether the system is in good operating condition. The PCM then sends the proper lamp-on or lamp-off messages to the instrument cluster. If the PCM sends a lamp-on message after the bulb test, it indicates that the PCM has detected an ETC system malfunction and/or that the ETC system is inoperative. The PCM will store a Diagnostic Trouble Code (DTC) for any malfunction it detects. Each time the ETC indicator fails to illuminate due to an open or short in the cluster ETC indicator circuit, the cluster sends a message notifying the PCM of the condition, then the instrument cluster and the PCM will each store a DTC.

For proper diagnosis of the ETC system, the PCM, the PCI data bus, or the electronic message inputs to the instrument cluster that control the ETC indicator, a diagnostic scan tool is required. Refer to the appropriate diagnostic information.

FRONT FOG LAMP INDICATOR

DESCRIPTION

Fig. 16 Front Fog Lamp Indicator

A front fog lamp indicator is standard equipment on all instrument clusters (Fig. 16). However, on vehicles not equipped with the optional front fog lamps, this indicator is electronically disabled. This indicator is located above the engine temperature gauge and to the right of the tachometer in the instrument cluster.

The front fog lamp indicator consists of a stencil-like cutout of the International Control and Display Symbol icon for “Front Fog Light” in the opaque layer of the instrument cluster overlay. The dark outer layer of the overlay prevents the indicator from being clearly visible when it is not illuminated. A green Light Emitting Diode (LED) behind the cutout in the opaque layer of the overlay causes the icon to appear in green through the translucent outer layer of the overlay when the indicator is illuminated from behind by the LED, which is soldered onto the instrument cluster electronic circuit board.

When the exterior lighting is turned On, the illumination intensity of the front fog lamp indicator is dimmable, which is adjusted along with the cluster illumination lighting using the panel lamps dimmer control ring on the left control stalk of the multi-function switch. The front fog lamp indicator is serviced as a unit with the instrument cluster.

OPERATION

The front fog lamp indicator gives an indication to the vehicle operator whenever the front fog lamps are illuminated. This indicator is controlled by a transistor on the instrument cluster circuit board based upon cluster programming and electronic messages received by the cluster from the Body Control Module (BCM) over the Programmable Communications Interface (PCI) data bus.

The front fog lamp indicator Light Emitting Diode (LED) is completely controlled by the instrument cluster logic circuit, and that logic will allow this indicator to operate whenever the instrument cluster receives a battery current input on the fused B(+) circuit. Therefore, the LED can be illuminated regardless of the ignition switch position. The LED only illuminates when it is provided a path to ground by the instrument cluster transistor. The instrument cluster will turn on the front fog lamp indicator for the following reasons:

- **Front Fog Lamp-On Message** - Each time the cluster receives a front fog lamp-on message from the

FRONT FOG LAMP INDICATOR (Continued)

BCM indicating the front fog lamps are turned On, the front fog lamp indicator will be illuminated. The indicator remains illuminated until the cluster receives a front fog lamp-off message from the BCM.

- **Actuator Test** - Each time the cluster is put through the actuator test, the front fog lamp indicator will be turned on, then off again during the bulb check portion of the test to confirm the functionality of the LED and the cluster control circuitry.

The BCM continually monitors the exterior lighting (multi-function) switch to determine the appropriate outputs to the front fog lamp relay. The BCM then sends the proper front fog lamp indicator lamp-on and lamp-off messages to the instrument cluster. For further diagnosis of the front fog lamp indicator or the instrument cluster circuitry that controls the indicator, (Refer to 8 - ELECTRICAL/INSTRUMENT CLUSTER - DIAGNOSIS AND TESTING).

For proper diagnosis of the front fog lamp system, the BCM, the PCI data bus, or the electronic message inputs to the instrument cluster that control the front fog lamp indicator, a diagnostic scan tool is required. Refer to the appropriate diagnostic information.

FUEL GAUGE

DESCRIPTION

Fig. 17 Fuel Gauge Icon

A fuel gauge is standard equipment on all instrument clusters. This gauge is located in the lower left corner of the instrument cluster, to the left of the speedometer. This gauge consists of a movable gauge needle or pointer controlled by the instrument cluster circuitry and a fixed 90 degree scale on the cluster overlay that reads left-to-right from “E” (or Empty) to “F” (or Full). An International Control and Display Symbol icon for “Fuel” is located on the cluster overlay, in the center of the gauge directly above the hub of the gauge needle (Fig. 17). An arrowhead pointed to the left side of the vehicle is imprinted on the cluster overlay next to the “Fuel” icon in the fuel gauge to provide the driver with a reminder as to the location of the fuel filler access.

The fuel gauge text and graphics are white against a black field, while the major and minor scale increments are black against a silver field, except for a pair of red zone increments at the far left (Empty) end of the gauge scale. All text, graphics and increments are clearly visible within the instrument cluster in daylight. When illuminated from behind by the panel lamps dimmer controlled cluster illumination lighting with the exterior lamps turned On, the white text and graphics and the major black increments appear blue-green, while the major red increments still appear red. The minor increments are not illuminated. The red gauge needle is internally illuminated.

Gauge illumination is provided by replaceable incandescent bulb and bulb holder units located on the instrument cluster electronic circuit board. The fuel gauge is serviced as a unit with the instrument cluster.

OPERATION

The fuel gauge gives an indication to the vehicle operator of the level of fuel in the fuel tank. This gauge is controlled by the instrument cluster circuit board based upon cluster programming and electronic messages received by the cluster from the Powertrain Control Module (PCM) over the Programmable Communications Interface (PCI) data bus.

The fuel gauge is an air core magnetic unit that receives battery current on the instrument cluster electronic circuit board through the fused ignition switch output (run-start) circuit whenever the ignition switch is in the On or Start positions. The cluster is programmed to move the gauge needle back to the low end of the scale after the ignition switch is turned to the Off position. The instrument cluster circuitry controls the gauge needle position and provides the following features:

- **Percent Tank Full Message** - Each time the cluster receives a message from the PCM indicating the percent tank full, the cluster moves the gauge needle to the proper relative position on the gauge scale. The PCM applies an algorithm to the input from the fuel tank sending unit to dampen gauge needle movement against the negative effect that fuel sloshing within the fuel tank can have on accurate inputs to the PCM.
- **Less Than 15 Percent Tank Full Message** - Each time the cluster receives messages from the PCM indicating the percent tank full is less than 15, the gauge needle is moved to below the one-eighth position (red zone) on the gauge scale and the low fuel indicator is illuminated. The low fuel indicator remains illuminated until the cluster receives messages from the PCM indicating that the percent tank full is greater than 15 (one-eighth), or until the ignition switch is turned to the Off position, whichever occurs first.
- **Less Than Empty Percent Tank Full Message** - Each time the cluster receives a message from the PCM indicating the percent tank full is less than empty, the gauge needle is moved to the far left (low)

FUEL GAUGE (Continued)

end of the gauge scale and the low fuel indicator is illuminated immediately. This message would indicate that the fuel tank sending unit input to the PCM is a short circuit.

- **More Than Full Percent Tank Full Message** - Each time the cluster receives a message from the PCM indicating the percent tank full is more than full, the gauge needle is moved to the far left (low) end of the gauge scale and the low fuel indicator is illuminated immediately. This message would indicate that the fuel tank sending unit input to the PCM is an open circuit.
- **Actuator Test** - Each time the cluster is put through the actuator test, the fuel gauge needle will be swept to several calibration points on the gauge scale in a prescribed sequence in order to confirm the functionality of the gauge and the cluster control circuitry.

The PCM continually monitors the fuel tank sending unit input to determine the level of fuel in the fuel tank. The PCM then applies an algorithm to the input and sends the proper percent tank full messages to the instrument cluster. For further diagnosis of the fuel gauge or the instrument cluster circuitry that controls the gauge, (Refer to 8 - ELECTRICAL/ INSTRUMENT CLUSTER - DIAGNOSIS AND TESTING).

For proper diagnosis of the fuel tank sending unit, the PCM, the PCI data bus, or the electronic message inputs to the instrument cluster that control the fuel gauge, a diagnostic scan tool is required. Refer to the appropriate diagnostic information.

GATE AJAR INDICATOR

DESCRIPTION

Fig. 18 Gate Ajar Indicator

A gate ajar indicator is standard equipment on all instrument clusters (Fig. 18). This indicator is located within the odometer/trip odometer Vacuum Fluorescent Display (VFD) unit. However, on models equipped with the optional Electronic Vehicle Information Center (EVIC) the gate ajar indicator in the odometer VFD is electronically suppressed so as not to duplicate indications that are provided by the EVIC.

The gate ajar indicator consists of the text “GATE”, which appears in place of the odometer/trip odometer information in the odometer VFD unit. The odometer VFD is soldered onto the cluster electronic circuit board and is visible through a window with a smoked clear lens located on the lower edge of the tachometer gauge dial face of the cluster overlay. The dark lens over the VFD prevents the indicator from being clearly visible when it is not illuminated. The “GATE” text appears in the same blue-green color and at the same lighting level as the odometer/trip odometer information when it is illuminated by the instrument cluster electronic circuit board. The gate ajar indicator is serviced as a unit with the VFD in the instrument cluster.

OPERATION

The gate ajar indicator gives an indication to the vehicle operator that the rear tailgate may be open or not completely latched. This indicator is controlled by the instrument cluster logic circuit based upon cluster programming and electronic messages received by the cluster from the Body Control Module (BCM) over the Programmable Communications Interface (PCI) data bus.

The gate ajar indicator function of the Vacuum Fluorescent Display (VFD) is completely controlled by the instrument cluster logic circuit, and that logic will only allow this indicator to operate when the instrument cluster receives a battery current input on the fused ignition switch output (run-start) circuit. Therefore, the VFD gate ajar indication will always be off when the ignition switch is in any position except On or Start. The instrument cluster will turn on the gate ajar indicator for the following reasons:

- **Gate Ajar Lamp-On Message** - Each time the cluster receives a gate ajar lamp-on message from the BCM indicating that the rear tailgate is open or not completely latched, the gate ajar indicator will be illuminated. If the ignition switch is in the On position and the vehicle is not moving when the gate ajar lamp-on message is received, the VFD will repeatedly and sequentially cycle the gate ajar indication in two second intervals with the odometer/trip odometer information and any other active warnings including: door ajar, glass ajar, and low washer fluid. If the vehicle is moving, or once the cluster of a non-moving vehicle receives an electronic vehicle speed message from the Powertrain Control Module (PCM) indicating a speed greater than zero, the warning sequence will consist of three complete display cycles with an audible single chime tone accompanying each cycle, then revert to only the visual gate ajar indication and odometer/trip odometer display cycling until the tailgate ajar switch is cycled. The gate ajar indicator will also be extinguished when the cluster receives a gate ajar lamp-off message from the BCM, or if the ignition switch is turned to the Off position, whichever occurs first.

GATE AJAR INDICATOR (Continued)

The BCM continually monitors the tailgate ajar switch to determine the status of the rear tailgate. The BCM then sends the proper gate ajar lamp-on and lamp-off messages to the instrument cluster. For further diagnosis of the gate ajar indicator or the instrument cluster circuitry that controls the indicator, (Refer to 8 - ELECTRICAL/INSTRUMENT CLUSTER - DIAGNOSIS AND TESTING).

For proper diagnosis of the tailgate ajar switch and circuit, the BCM, the PCI data bus, or the electronic message inputs to the instrument cluster that control the gate ajar indicator, a diagnostic scan tool is required. Refer to the appropriate diagnostic information.

GLASS AJAR INDICATOR

DESCRIPTION

GLASS

Fig. 19 Glass Ajar Indicator

A glass ajar indicator is standard equipment on all instrument clusters (Fig. 19). This indicator is located within the odometer/trip odometer Vacuum Fluorescent Display (VFD) unit. However, on models equipped with the optional Electronic Vehicle Information Center (EVIC) the glass ajar indicator in the odometer VFD is electronically suppressed so as not to duplicate indications that are provided by the EVIC.

The glass ajar indicator consists of the text “GLASS”, which appears in place of the odometer/trip odometer information in the odometer VFD unit. The odometer VFD is soldered onto the cluster electronic circuit board and is visible through a window with a smoked clear lens located on the lower edge of the tachometer gauge dial face of the cluster overlay. The dark lens over the VFD prevents the indicator from being clearly visible when it is not illuminated. The “GLASS” text appears in the same blue-green color and at the same lighting level as the odometer/trip odometer information when it is illuminated by the instrument cluster electronic circuit board. The glass ajar indicator is serviced as a unit with the VFD in the instrument cluster.

OPERATION

The glass ajar indicator gives an indication to the vehicle operator that the rear flip-up glass may be open or not completely latched. This indicator is controlled by the instrument cluster logic circuit based upon cluster programming and electronic messages received by the cluster from the Body Control Module (BCM) over the Programmable Communications Interface (PCI) data bus.

The glass ajar indicator function of the Vacuum Fluorescent Display (VFD) is completely controlled by the instrument cluster logic circuit, and that logic will only allow this indicator to operate when the instrument cluster receives a battery current input on the fused ignition switch output (run-start) circuit. Therefore, the VFD glass ajar indication will always be off when the ignition switch is in any position except On or Start. The instrument cluster will turn on the glass ajar indicator for the following reasons:

- **Glass Ajar Lamp-On Message** - Each time the cluster receives a glass ajar lamp-on message from the BCM indicating that the rear flip-up glass is open or not completely latched, the glass ajar indicator will be illuminated. If the ignition switch is in the On position and the vehicle is not moving when the glass ajar lamp-on message is received, the VFD will repeatedly and sequentially cycle its glass ajar indication in two second intervals with the odometer/trip odometer information and any other active warnings including: door ajar, gate ajar, and low washer fluid. If the vehicle is moving, or once the cluster of a non-moving vehicle receives an electronic vehicle speed message from the Powertrain Control Module (PCM) indicating a speed greater than zero, the warning sequence will consist of three complete display cycles with an audible single chime tone accompanying each of the first two cycles, then revert to only the visual glass ajar indication and odometer/trip odometer display cycling until the glass ajar switch is cycled. The glass ajar indicator will also be extinguished when the cluster receives a glass ajar lamp-off message from the BCM, or if the ignition switch is turned to the Off position, whichever occurs first.

The BCM continually monitors the flip-up glass ajar switch to determine the status of the rear flip-up glass. The BCM then sends the proper glass ajar lamp-on and lamp-off messages to the instrument cluster. For further diagnosis of the glass ajar indicator or the instrument cluster circuitry that controls the indicator, (Refer to 8 - ELECTRICAL/INSTRUMENT CLUSTER - DIAGNOSIS AND TESTING).

For proper diagnosis of the glass ajar switch and circuit, the BCM, the PCI data bus, or the electronic message inputs to the instrument cluster that control the glass ajar indicator, a diagnostic scan tool is required. Refer to the appropriate diagnostic information.

HIGH BEAM INDICATOR

DESCRIPTION

Fig. 20 High Beam Indicator

A high beam indicator is standard equipment on all instrument clusters (Fig. 20). This indicator is located near the upper edge of the instrument cluster, between the tachometer and the speedometer.

The high beam indicator consists of a stencil-like cutout of the International Control and Display Symbol icon for “High Beam” in the opaque layer of the instrument cluster overlay. The dark outer layer of the overlay prevents the indicator from being clearly visible when it is not illuminated. A blue Light Emitting Diode (LED) behind the cutout in the opaque layer of the overlay causes the icon to appear in blue through the translucent outer layer of the overlay when the indicator is illuminated from behind by the LED, which is soldered onto the instrument cluster electronic circuit board. The high beam indicator is serviced as a unit with the instrument cluster.

OPERATION

The high beam indicator gives an indication to the vehicle operator whenever the headlamp high beams are illuminated. In certain markets where required, the high beam indicator also gives an indication when the optional light bar lamps are illuminated. This indicator is controlled by a transistor on the instrument cluster circuit board based upon cluster programming and electronic messages received by the cluster from the Body Control Module (BCM) over the Programmable Communications Interface (PCI) data bus.

The high beam indicator Light Emitting Diode (LED) is completely controlled by the instrument cluster logic circuit, and that logic will allow this indicator to operate whenever the instrument cluster receives a battery current input on the fused B(+) circuit. Therefore, the LED can be illuminated regardless of the ignition switch position. The LED only illuminates when it is provided a path to ground by the instrument cluster transistor. The instrument cluster will turn on the high beam indicator for the following reasons:

- **High Beam Headlamps-On Message** - Each time the cluster receives a high beam headlamps-on message from the BCM indicating the headlamp high beams are turned On, the high beam indicator will be illuminated. The indicator remains illuminated until the cluster receives a high beam headlamps-off message from the BCM.
- **Light Bar Lamps-On Message** - This function of the high beam indicator applies only to vehicles equipped with the optional light bar lamps and manufactured for certain markets where it is required. Each time the cluster receives a light bar lamps-on message from the BCM indicating the light bar lamps are turned On, the high beam indicator will be illuminated. The indicator remains illuminated until the cluster receives a light bar lamps-off message from the BCM.
- **Actuator Test** - Each time the cluster is put through the actuator test, the high beam indicator will be turned on, then off again during the bulb check portion of the test to confirm the functionality of the LED and the cluster control circuitry.

The BCM continually monitors the exterior lighting (multi-function) switch and the optional light bar lamp switch to determine the appropriate outputs to the headlamp low beam, headlamp high beam, and light bar lamp relays. The BCM then sends the proper high beam indicator and light bar lamp-on and lamp-off messages to the instrument cluster. For further diagnosis of the high beam indicator or the instrument cluster circuitry that controls the indicator, (Refer to 8 - ELECTRICAL/INSTRUMENT CLUSTER - DIAGNOSIS AND TESTING).

For proper diagnosis of the headlamp system, the light bar lamp system, the BCM, the PCI data bus, or the electronic message inputs to the instrument cluster that control the high beam indicator, a diagnostic scan tool is required. Refer to the appropriate diagnostic information.

LIGHT BAR LAMP INDICATOR

DESCRIPTION

Fig. 21 Light Bar Indicator

A light bar lamp indicator is standard equipment on all instrument clusters, but is only functional on vehicles equipped with the optional roof-mounted light bar (Fig. 21). This indicator is located above the fuel gauge and to the left of the speedometer in the instrument cluster.

The light bar lamp indicator consists of a stencil-like cutout of an icon in the opaque layer of the instrument cluster overlay. This icon is similar in appearance to the International Control and Display Symbol icon for “High Beam”, but has an additional curved line beneath it to represent the forward roofline of the vehicle. The dark outer layer of the overlay prevents the indicator from being clearly visible

LIGHT BAR LAMP INDICATOR (Continued)

when the it is not illuminated. An amber or blue Light Emitting Diode (LED) behind the cutout in the opaque layer of the overlay causes the icon to appear in amber or blue through the translucent outer layer of the overlay when the indicator is illuminated from behind by the LED, which is soldered onto the instrument cluster electronic circuit board. The color of the LED used is determined by the requirements of the market for which the vehicle is manufactured.

When the exterior lighting is turned On, the illumination intensity of the light bar lamp indicator is dimmable, which is adjusted along with the cluster illumination lighting using the panel lamps dimmer control ring on the left control stalk of the multi-function switch. The light bar lamp indicator is serviced as a unit with the instrument cluster.

OPERATION

The light bar lamp indicator gives an indication to the vehicle operator whenever the light bar lamps are illuminated. In certain markets where required, the high beam indicator also gives an indication when the optional light bar lamps are illuminated. This indicator is controlled by a transistor on the instrument cluster circuit board based upon cluster programming and electronic messages received by the cluster from the Body Control Module (BCM) over the Programmable Communications Interface (PCI) data bus.

The light bar lamp indicator Light Emitting Diode (LED) is completely controlled by the instrument cluster logic circuit, and that logic will allow this indicator to operate whenever the instrument cluster receives a battery current input on the fused B(+) circuit. Therefore, the LED can be illuminated regardless of the ignition switch position. The LED only illuminates when it is provided a path to ground by the instrument cluster transistor. The instrument cluster will turn on the light bar lamp indicator for the following reasons:

- **Light Bar Lamps-On Message** - Each time the cluster receives a light bar lamps-on message from the BCM indicating the light bar lamps are turned On, the light bar lamp indicator will be illuminated. The indicator remains illuminated until the cluster receives a light bar lamps-off message from the BCM.
- **Actuator Test** - Each time the cluster is put through the actuator test, the light bar lamp indicator will be turned on, then off again during the bulb check portion of the test to confirm the functionality of the LED and the cluster control circuitry.

The BCM continually monitors the light bar lamp switch to determine the apropriate outputs to the light bar lamp relay. The BCM then sends the proper light bar lamp-on and lamp-off messages to the instrument cluster. For further diagnosis of the light bar lamp indicator or the instrument cluster circuitry that controls the indicator, (Refer to 8 - ELECTRICAL/INSTRUMENT CLUSTER - DIAGNOSIS AND TESTING).

For proper diagnosis of the light bar lamp system, the BCM, the PCI data bus, or the electronic message inputs to the instrument cluster that control the light bar lamp indicator, a diagnostic scan tool is required. Refer to the appropriate diagnostic information.

LOW FUEL INDICATOR

DESCRIPTION

Fig. 22 Low Fuel Indicator

A low fuel indicator is standard equipment on all instrument clusters (Fig. 22). This indicator is located above the fuel gauge and to the left of the speedometer in the instrument cluster.

The low fuel indicator consists of a stencil-like cutout of the International Control and Display Symbol icon for “Fuel” in the opaque layer of the instrument cluster overlay. The dark outer layer of the overlay prevents the indicator from being clearly visible when it is not illuminated. An amber Light Emitting Diode (LED) behind the cutout in the opaque layer of the overlay causes the icon to appear in amber through the translucent outer layer of the overlay when the indicator is illuminated from behind by the LED, which is soldered onto the instrument cluster electronic circuit board. The low fuel indicator is serviced as a unit with the instrument cluster.

OPERATION

The low fuel indicator gives an indication to the vehicle operator when the level of fuel in the fuel tank becomes low. This indicator is controlled by a transistor on the instrument cluster circuit board based upon cluster programming and electronic messages received by the cluster from the Powertrain Control Module (PCM) over the Programmable Communications Interface (PCI) data bus.

The low fuel indicator Light Emitting Diode (LED) is completely controlled by the instrument cluster logic circuit, and that logic will only allow this indicator to operate when the instrument cluster receives a battery current input on the fused ignition switch output (run-start) circuit. Therefore, the LED will always be off when the ignition switch is in any position except On or Start. The LED only illuminates when it is provided a path to ground by the instrument cluster transistor. The instrument cluster will

LOW FUEL INDICATOR (Continued)

turn on the low fuel indicator for the following reasons:

- **Bulb Test** - Each time the ignition switch is turned to the On position the low fuel indicator is illuminated for about three seconds as a bulb test.
- **Less Than 15 Percent Tank Full Message** - Each time the cluster receives messages from the PCM indicating that the percent tank full is less than 15, the low fuel indicator is illuminated. The indicator remains illuminated until the cluster receives messages from the PCM indicating that the percent tank full has increased to greater than 15. The PCM applies an algorithm to the input from the fuel tank sending unit to dampen the illumination of the low fuel indicator against the negative effect that fuel sloshing within the fuel tank can have on accurate inputs to the PCM.
- **Less Than Empty Percent Tank Full Message** - Each time the cluster receives a message from the PCM indicating the percent tank full is less than empty, the low fuel indicator is illuminated immediately. This message would indicate that the fuel tank sending unit input to the PCM is a short circuit.
- **More Than Full Percent Tank Full Message** - Each time the cluster receives a message from the PCM indicating the percent tank full is more than full, the low fuel indicator is illuminated immediately. This message would indicate that the fuel tank sending unit input to the PCM is an open circuit.
- **Communication Error** - If the cluster fails to receive a percent tank full message for more than about twelve seconds, the cluster control circuitry will illuminate the low fuel indicator until a new percent tank full message is received, or until the ignition switch is turned to the Off position, whichever occurs first.
- **Actuator Test** - Each time the cluster is put through the actuator test, the low fuel indicator will be turned on, then off again during the bulb check portion of the test to confirm the functionality of the LED and the cluster control circuitry.

The PCM continually monitors the fuel tank sending unit input to determine the level of fuel in the fuel tank. The PCM then applies an algorithm to the input and sends the proper percent tank full messages to the instrument cluster. For further diagnosis of the low fuel indicator or the instrument cluster circuitry that controls the LED, (Refer to 8 - ELECTRICAL/INSTRUMENT CLUSTER - DIAGNOSIS AND TESTING).

For proper diagnosis of the fuel tank sending unit, the PCM, the PCI data bus, or the electronic message inputs to the instrument cluster that control the low fuel indicator, a diagnostic scan tool is required. Refer to the appropriate diagnostic information.

LOW OIL PRESSURE INDICATOR

DESCRIPTION

Fig. 23 Low Oil Pressure Indicator

A low oil pressure indicator is standard equipment on all instrument clusters (Fig. 23). This indicator is located near the lower edge of the instrument cluster, between the tachometer and the speedometer.

The low oil pressure indicator consists of a stencil-like cutout of the International Control and Display Symbol icon for “Engine Oil” in the opaque layer of the instrument cluster overlay. The dark outer layer of the overlay prevents the indicator from being clearly visible when it is not illuminated. A red Light Emitting Diode (LED) behind the cutout in the opaque layer of the overlay causes the icon to appear in red through the translucent outer layer of the overlay when the indicator is illuminated from behind by the LED, which is soldered onto the instrument cluster electronic circuit board. The low oil pressure indicator is serviced as a unit with the instrument cluster.

OPERATION

The low oil pressure indicator gives an indication to the vehicle operator when the engine oil pressure is low. This indicator is controlled by a transistor on the instrument cluster electronic circuit board based upon cluster programming and electronic messages received by the cluster from the Powertrain Control Module (PCM) over the Programmable Communications Interface (PCI) data bus.

The low oil pressure indicator Light Emitting Diode (LED) is completely controlled by the instrument cluster logic circuit, and that logic will only allow this indicator to operate when the instrument cluster receives a battery current input on the fused ignition switch output (run-start) circuit. Therefore, the LED will always be off when the ignition switch is in any position except On or Start. The LED only illuminates when it is provided a path to ground by the instrument cluster transistor. The instrument cluster will turn on the low oil pressure indicator for the following reasons:

- **Bulb Test** - Each time the ignition switch is turned to the On position the low oil pressure indicator is illuminated as a bulb test. The indicator will remain illuminated until the engine is started (engine speed is greater than 450 rpm), or until the ignition switch is turned to the Off position, whichever occurs first.

LOW OIL PRESSURE INDICATOR (Continued)

- **Engine Oil Pressure Low Message** - Once the engine has been started (engine speed has been greater than 450 rpm), each time the cluster receives three consecutive messages from the PCM indicating that the engine oil pressure is about 4 kPa or lower (about 0.6 psi or lower), the low oil pressure indicator is illuminated. The indicator remains illuminated until the cluster receives a single message from the PCM indicating that the engine oil pressure is about 76 kPa or higher (about 11 psi or higher), or until the ignition switch is turned to the Off position, whichever occurs first. Once the cluster monitors an engine speed of greater than 450 rpm, the cluster logic will ignore engine speed in determining low oil pressure indicator operation for the remainder of the current ignition cycle.
- **Actuator Test** - Each time the cluster is put through the actuator test, the low oil pressure indicator will be turned on, then off again during the bulb check portion of the test to confirm the functionality of the LED and the cluster control circuitry.

The PCM continually monitors the engine oil pressure sensor to determine the engine oil pressure. The PCM then sends the proper engine oil pressure messages to the instrument cluster. If the instrument cluster turns on the indicator after the bulb test, it may indicate that the engine or the engine oiling system requires service. For further diagnosis of the low oil pressure indicator or the instrument cluster circuitry that controls the LED, (Refer to 8 - ELECTRICAL/INSTRUMENT CLUSTER - DIAGNOSIS AND TESTING).

For proper diagnosis of the engine oil pressure sensor, the PCM, the PCI data bus, or the electronic message inputs to the instrument cluster that control the low oil pressure indicator, a diagnostic scan tool is required. Refer to the appropriate diagnostic information.

MALFUNCTION INDICATOR LAMP (MIL)

DESCRIPTION

Fig. 24 Malfunction Indicator Lamp (MIL)

A Malfunction Indicator Lamp (MIL) is standard equipment on all instrument clusters (Fig. 24). This indicator is located above the coolant temperature gauge and to the right of the tachometer in the instrument cluster.

The MIL consists of a stencil-like cutout of the International Control and Display Symbol icon for "Engine" in the opaque layer of the instrument cluster overlay. The dark outer layer of the overlay prevents the indicator from being clearly visible when it is not illuminated. An amber Light Emitting Diode (LED) behind the cutout in the opaque layer of the overlay causes the icon to appear in amber through the translucent outer layer of the overlay when the indicator is illuminated from behind by the LED, which is soldered onto the instrument cluster electronic circuit board. The MIL is serviced as a unit with the instrument cluster.

OPERATION

The Malfunction Indicator Lamp (MIL) gives an indication to the vehicle operator when the Powertrain Control Module (PCM) has recorded a Diagnostic Trouble Code (DTC) for an On-Board Diagnostics II (OBDII) emissions-related circuit or component malfunction. The MIL is controlled by a transistor on the instrument cluster circuit board based upon cluster programming and electronic messages received by the cluster from the PCM over the Programmable Communications Interface (PCI) data bus.

The MIL Light Emitting Diode (LED) is completely controlled by the instrument cluster logic circuit, and that logic will only allow this indicator to operate when the instrument cluster receives a battery current input on the fused ignition switch output (run-start) circuit. Therefore, the LED will always be off when the ignition switch is in any position except On or Start. The LED only illuminates when it is provided a path to ground by the instrument cluster transistor. The instrument cluster will turn on the MIL for the following reasons:

- **Bulb Test** - Each time the ignition switch is turned to the On position the MIL is illuminated for about seven seconds as a bulb test.
- **MIL Lamp-On Message** - Each time the cluster receives a MIL lamp-on message from the PCM, the indicator will be illuminated. The indicator can be flashed on and off, or illuminated solid, as dictated by the PCM message. For some DTC's, if a problem does not recur, the PCM will send a lamp-off message automatically. Other DTC's may require that a fault be repaired and the PCM be reset before a lamp-off message will be sent. For more information on the PCM and the DTC set and reset parameters, (Refer to 25 - EMISSIONS CONTROL - OPERATION).
- **Communication Error** - If the cluster receives no lamp-on or lamp-off message from the PCM for twenty consecutive seconds, the MIL is illuminated by the instrument cluster. The indicator remains controlled and illuminated by the cluster until a valid lamp-on or lamp-off message is received from the PCM.

MALFUNCTION INDICATOR LAMP (MIL) (Continued)

- **Actuator Test** - Each time the cluster is put through the actuator test, the MIL will be turned on, then off again during the bulb check portion of the test to confirm the functionality of the LED and the cluster control circuitry.

The PCM continually monitors the fuel and emissions system circuits and sensors to decide whether the system is in good operating condition. The PCM then sends the proper lamp-on or lamp-off messages to the instrument cluster. If the instrument cluster turns on the MIL after the bulb test, it may indicate that a malfunction has occurred or that the fuel and emissions systems require service. For further diagnosis of the MIL or the instrument cluster circuitry that controls the LED, (Refer to 8 - ELECTRICAL/ INSTRUMENT CLUSTER - DIAGNOSIS AND TESTING).

For proper diagnosis of the fuel and emissions systems, the PCM, the PCI data bus, or the electronic message inputs to the instrument cluster that control the MIL, a diagnostic scan tool is required. Refer to the appropriate diagnostic information.

ODOMETER

DESCRIPTION

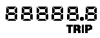

Fig. 25 Odometer Display

An odometer and trip odometer are standard equipment in all instrument clusters (Fig. 25). The odometer and trip odometer information are displayed in a common electronic, blue-green Vacuum Fluorescent Display (VFD). The VFD unit is soldered onto the cluster electronic circuit board and is visible through a window with a smoked clear lens located in the lower edge of the tachometer gauge dial face of the cluster overlay. The dark lens over the VFD prevents it from being clearly visible when it is not illuminated.

The odometer and trip odometer information are not displayed simultaneously. The trip odometer reset switch on the instrument cluster circuit board toggles the display between odometer and trip odometer modes by depressing the odometer/trip odometer switch button that extends through the lower edge of the cluster lens, just right of the odometer VFD. When the trip odometer information is displayed, the word “TRIP” is also illuminated near the bottom of the VFD in a blue-green color and at the same lighting level as the trip odometer information.

The odometer and trip odometer distance information is stored in the instrument cluster memory. This information can be increased when the proper inputs are provided to the instrument cluster, but the information cannot be decreased. The odometer can display values up to 864,004 kilometers (536,870 miles). The odometer latches at these values, and will not roll over to zero. The trip odometer can display values up to 9,999.9 kilometers (9,999.9 miles) before it rolls over to zero.

The odometer display does not have a decimal point and will not show values less than a full unit (kilometer or mile), while the trip odometer display does have a decimal point and will show tenths of a unit (kilometer or mile). The unit of measure for the odometer and trip odometer is selected at the time that it is manufactured, and cannot be changed. If the instrument cluster has a kilometers-per-hour primary speedometer scale, the odometer/trip odometer registers kilometers; and if the cluster features a miles-per-hour primary speedometer scale, the odometer/trip odometer registers miles.

The odometer/trip odometer has a “Rental Car” mode, which will illuminate the odometer information in the VFD whenever the driver side front door is opened with the ignition switch in the Off or Accessory positions. During daylight hours (exterior lamps are Off) the VFD is illuminated at full brightness for clear visibility. At night (exterior lamps are On) the VFD lighting level is adjusted with the other cluster illumination lamps using the panel lamps dimmer control ring on the left control stalk of the multi-function switch. However, a “Parade” mode position of the panel lamps dimmer control ring allows the VFD to be illuminated at full brightness if the exterior lamps are turned On during daylight hours.

The odometer/trip odometer VFD, the trip odometer switch, and the trip odometer switch button are serviced as a unit with the instrument cluster.

OPERATION

The odometer and trip odometer give an indication to the vehicle operator of the distance the vehicle has traveled. This indicator is controlled by the instrument cluster circuitry based upon cluster programming and electronic messages received by the cluster from the Powertrain Control Module (PCM) over the Programmable Communications Interface (PCI) data bus.

The odometer and trip odometer information is displayed by the instrument cluster Vacuum Fluorescent Display (VFD). The VFD will display the odometer information whenever the driver side front door is opened with the ignition switch in the Off or Accessory positions, and will display the last previously selected odometer or trip odometer information when the ignition switch is turned to the On or Start

ODOMETER (Continued)

positions. The instrument cluster circuitry controls the VFD and provides the following features:

- **Odometer/Trip Odometer Display Toggling** - Actuating the trip odometer reset switch button momentarily with the VFD illuminated will toggle the display between the odometer and trip odometer information. Each time the VFD is illuminated with the ignition switch in the On or Start positions, the display will automatically return to the last mode previously selected (odometer or trip odometer).
- **Trip Odometer Reset** - When the trip odometer reset switch button is pressed and held for longer than about two seconds with the ignition switch in the On or Start positions, the trip odometer will be reset to 0.0 kilometers (miles). The VFD must be displaying the trip odometer information in order for the trip odometer information to be reset.
- **Communication Error** - If the cluster fails to receive a distance message during normal operation, it will hold and display the last data received until the ignition switch is turned to the Off position. If the cluster does not receive a distance message within one second after the ignition switch is turned to the On position, it will display the last distance message stored in the cluster memory. If the cluster is unable to display distance information due to an error internal to the cluster, the VFD will display "error."
- **Actuator Test** - Each time the cluster is put through the actuator test, the VFD will step sequentially through a display of "111111" through "999999", then display the cluster software version number to confirm the functionality of each of the VFD segments and the cluster control circuitry.

The PCM continually monitors the vehicle speed pulse information received from the Body Control Module (BCM), then sends the proper distance messages to the instrument cluster. For further diagnosis of the odometer/trip odometer or the instrument cluster circuitry that controls these functions, (Refer to 8 - ELECTRICAL/INSTRUMENT CLUSTER - DIAGNOSIS AND TESTING).

For proper diagnosis of the vehicle speed sensor, the BCM, the PCM, the PCI data bus, or the electronic message inputs to the instrument cluster that control the odometer/trip odometer, a diagnostic scan tool is required. Refer to the appropriate diagnostic information.

OVERDRIVE OFF INDICATOR

DESCRIPTION

Fig. 26 Overdrive Off Indicator

An overdrive off indicator is standard equipment on all instrument clusters (Fig. 26). However, on vehicles not equipped with the optional overdrive automatic transmission, this indicator is electronically disabled. This indicator is located above the fuel gauge and to the left of the speedometer in the instrument cluster.

The overdrive off indicator consists of a stencil-like cutout of the text "O/D OFF" in the opaque layer of the instrument cluster overlay. The dark outer layer of the overlay prevents the text from being clearly visible when the indicator is not illuminated. An amber Light Emitting Diode (LED) behind the cutout in the opaque layer of the overlay causes the "O/D OFF" text to appear in amber through the translucent outer layer of the overlay when the indicator is illuminated from behind by the LED, which is soldered onto the instrument cluster electronic circuit board.

When the exterior lighting is turned On, the illumination intensity of the overdrive off indicator is dimmable, which is adjusted along with the cluster illumination lighting using the panel lamps dimmer control ring on the left control stalk of the multifunction switch. The overdrive off indicator is serviced as a unit with the instrument cluster.

OPERATION

The overdrive off indicator gives an indication to the vehicle operator when the Off position of the overdrive off switch has been selected, disabling the electronically controlled overdrive feature of the automatic transmission. This indicator is controlled by a transistor on the instrument cluster circuit board based upon cluster programming and electronic messages received by the cluster from the Powertrain Control Module (PCM) over the Programmable Communications Interface (PCI) data bus.

The overdrive off indicator Light Emitting Diode (LED) is completely controlled by the instrument cluster logic circuit, and that logic will only allow this indicator to operate when the instrument cluster receives a battery current input on the fused ignition switch output (run-start) circuit. Therefore, the LED will always be off when the ignition switch is in any position except On or Start. The LED only illuminates when it is provided a path to ground by the instrument cluster transistor. The instrument cluster will turn on the overdrive off indicator for the following reasons:

- **Overdrive Off Lamp-On Message** - Each time the cluster receives an overdrive off lamp-on message from the PCM indicating that the Off position of the overdrive off switch has been selected, the overdrive off indicator will be illuminated. The indicator remains illuminated until the cluster receives an

OVERDRIVE OFF INDICATOR (Continued)

overdrive off lamp-off message from the PCM, or until the ignition switch is turned to the Off position, whichever occurs first.

- **Actuator Test** - Each time the cluster is put through the actuator test, the overdrive off indicator will be turned on, then off again during the bulb check portion of the test to confirm the functionality of the LED and the cluster control circuitry.

The PCM continually monitors the overdrive off switch to determine the appropriate outputs to the automatic transmission. The PCM then sends the proper overdrive off lamp-on and lamp-off messages to the instrument cluster. For further diagnosis of the overdrive off indicator or the instrument cluster circuitry that controls the indicator, (Refer to 8 - ELECTRICAL/INSTRUMENT CLUSTER - DIAGNOSIS AND TESTING).

For proper diagnosis of the overdrive control system, the PCM, the PCI data bus, or the electronic message inputs to the instrument cluster that control the overdrive off indicator, a diagnostic scan tool is required. Refer to the appropriate diagnostic information.

REAR FOG LAMP INDICATOR

DESCRIPTION

Fig. 27 Rear Fog Lamp Indicator

A rear fog lamp indicator is standard equipment on all instrument clusters (Fig. 27). However, on vehicles not equipped with the optional rear fog lamps, which are available only in certain markets where they are required, this indicator is electronically disabled. This indicator is located above the coolant temperature gauge and to the right of the tachometer in the instrument cluster.

The rear fog lamp indicator consists of a stencil-like cutout of the International Control and Display Symbol icon for “Rear Fog Light” in the opaque layer of the instrument cluster overlay. The dark outer layer of the overlay prevents the indicator from being clearly visible when it is not illuminated. An amber Light Emitting Diode (LED) behind the cutout in the opaque layer of the overlay causes the icon to appear in amber through the translucent outer layer of the overlay when the indicator is illuminated from behind by the LED, which is soldered onto the instrument cluster electronic circuit board.

When the exterior lighting is turned On, the illumination intensity of the rear fog lamp indicator is dimmable, which is adjusted along with the cluster illumination lighting using the panel lamps dimmer control ring on the left control stalk of the multi-function switch. The rear fog lamp indicator is serviced as a unit with the instrument cluster.

OPERATION

The rear fog lamp indicator gives an indication to the vehicle operator whenever the rear fog lamps are illuminated. This indicator is controlled by a transistor on the instrument cluster circuit board based upon cluster programming and electronic messages received by the cluster from the Body Control Module (BCM) over the Programmable Communications Interface (PCI) data bus.

The rear fog lamp indicator Light Emitting Diode (LED) is completely controlled by the instrument cluster logic circuit, and that logic will allow this indicator to operate whenever the instrument cluster receives a battery current input on the fused B(+) circuit. Therefore, the LED can be illuminated regardless of the ignition switch position. The LED only illuminates when it is provided a path to ground by the instrument cluster transistor. The instrument cluster will turn on the rear fog lamp indicator for the following reasons:

- **Rear Fog Lamp-On Message** - Each time the cluster receives a rear fog lamp-on message from the BCM indicating the rear fog lamps are turned On, the rear fog lamp indicator will be illuminated. The indicator remains illuminated until the cluster receives a rear fog lamp-off message from the BCM.
- **Actuator Test** - Each time the cluster is put through the actuator test, the rear fog lamp indicator will be turned on, then off again during the bulb check portion of the test to confirm the functionality of the LED and the cluster control circuitry.

The BCM continually monitors the exterior lighting (multi-function) switch to determine the appropriate outputs to the rear fog lamp relay. The BCM then sends the proper rear fog lamp indicator lamp-on and lamp-off messages to the instrument cluster. For further diagnosis of the rear fog lamp indicator or the instrument cluster circuitry that controls the indicator, (Refer to 8 - ELECTRICAL/INSTRUMENT CLUSTER - DIAGNOSIS AND TESTING).

For proper diagnosis of the rear fog lamp system, the BCM, the PCI data bus, or the electronic message inputs to the instrument cluster that control the rear fog lamp indicator, a diagnostic scan tool is required. Refer to the appropriate diagnostic information.

SEATBELT INDICATOR

DESCRIPTION

Fig. 28 Seatbelt Indicator

A seatbelt indicator is standard equipment on all instrument clusters (Fig. 28). This indicator is located above the fuel gauge and to the left of the speedometer in the instrument cluster.

The seatbelt indicator consists of a stencil-like cutout of the International Control and Display Symbol icon for “Seat Belt” in the opaque layer of the instrument cluster overlay. The dark outer layer of the overlay prevents the indicator from being clearly visible when it is not illuminated. A red Light Emitting Diode (LED) behind the cutout in the opaque layer of the overlay causes the icon to appear in red through the translucent outer layer of the overlay when the indicator is illuminated from behind by the LED, which is soldered onto the instrument cluster electronic circuit board. The seatbelt indicator is serviced as a unit with the instrument cluster.

OPERATION

The seatbelt indicator gives an indication to the vehicle operator of the status of the driver side front seatbelt. This indicator is controlled by a transistor on the instrument cluster circuit board based upon cluster programming. On models equipped with airbags the indicator is also controlled by electronic messages received by the cluster from the Airbag Control Module (ACM) over the Programmable Communications Interface (PCI) data bus.

The seatbelt indicator also includes a programmable enhanced seatbelt reminder or “beltminder” feature that is enabled when the vehicle is shipped from the factory. This beltminder feature can be disabled and enabled by the customer using a specific programming event sequence, or by the dealer using a diagnostic scan tool.

The seatbelt indicator Light Emitting Diode (LED) is completely controlled by the instrument cluster logic circuit, and that logic will only allow this indicator to operate when the instrument cluster receives a battery current input on the fused ignition switch output (run-start) circuit. Therefore, the LED will always be off when the ignition switch is in any position except On or Start. The LED only illuminates when it is provided a path to ground by the instrument cluster transistor. The instrument cluster will turn on the seatbelt indicator for the following reasons:

- **Seatbelt Reminder Function** - Each time the cluster receives a battery current input on the fused ignition switch output (run-start) circuit, the indicator will be illuminated as a seatbelt reminder for about seven seconds, or until the ignition switch is turned to the Off position, whichever occurs first. This reminder function will occur regardless of the status of the electronic seat belt lamp-on or lamp-off messages received by the cluster from the ACM.
- **Seat Belt Lamp-On Message - Beltminder Active** - On models equipped with airbags, following the seatbelt reminder function, each time the cluster receives a seat belt lamp-on message from the ACM indicating that the driver side front seat belt is not fastened with the ignition switch in the Start or On positions, the indicator will be illuminated. In addition, if the driver side front seat belt remains unbuckled about sixty seconds after the conclusion of the seatbelt reminder function with the vehicle speed greater than about 13 kilometers-per-hour (8 miles-per-hour), the seatbelt indicator will begin to cycle between flashing on and off for five seconds, then lighting solid for three seconds. The seatbelt indicator will continue to cycle between flashing and solid illumination for twelve complete cycles, until the cluster receives a seat belt lamp-off message, or until the ignition switch is turned to the Off position, whichever occurs first.
- **Seat Belt Lamp-On Message - Beltminder Inactive** - On models equipped with airbags, following the seatbelt reminder function, each time the cluster receives a seat belt lamp-on message from the ACM indicating that the driver side front seat belt is not fastened with the ignition switch in the Start or On positions, the indicator will be illuminated. The seatbelt indicator remains illuminated until the cluster receives a seat belt lamp-off message, or until the ignition switch is turned to the Off position, whichever occurs first.
- **Actuator Test** - Each time the cluster is put through the actuator test, the seatbelt indicator will be turned on, then off again during the bulb check portion of the test to confirm the functionality of the LED and the cluster control circuitry.

The ACM continually monitors the status of the driver side front seat belt switch to determine the appropriate airbag system response to a vehicle frontal impact. The ACM then sends the proper seatbelt indicator lamp-on and lamp-off messages to the instrument cluster based upon the status of the seat belt switch input. For further diagnosis of the seatbelt indicator or the instrument cluster circuitry that controls the indicator, (Refer to 8 - ELECTRICAL/INSTRUMENT CLUSTER - DIAGNOSIS AND TESTING).

SEATBELT INDICATOR (Continued)

For proper diagnosis of the seatbelt switch, the ACM, the PCI data bus, or the electronic message inputs to the instrument cluster that control the seatbelt indicator, a diagnostic scan tool is required. Refer to the appropriate diagnostic information.

STANDARD PROCEDURE - ENHANCED SEATBELT REMINDER PROGRAMMING

The seatbelt indicator also includes a programmable enhanced seatbelt reminder or “beltminder” feature that is enabled when the vehicle is shipped from the factory. This beltminder feature provides extended and modified visual seatbelt indicator and audible chime warning responses to an unbuckled driver side front seat belt. The beltminder feature may be disabled or enabled by the customer using the programming sequence that follows, or by the dealer using a diagnostic scan tool.

CUSTOMER PROGRAMMING SEQUENCE

NOTE: The following sequence of events must occur within sixty (60) seconds of the ignition switch being placed in the On position in order for the programming to be completed successfully.

(1) With the ignition switch in any position except On or Start, buckle the driver side front seat belt.

(2) Turn the ignition switch to the On position and wait for the seatbelt indicator reminder function to conclude (about seven seconds).

(3) Unbuckle and buckle the driver side front seat belt three or more times, ending with the belt buckled.

(4) Turn the ignition switch to any position except On or Start to toggle the beltminder feature from its current setting (from active to inactive, or from inactive to active). A single chime tone will provide an audible confirmation that the programming sequence has been successfully completed.

SECURITY INDICATOR

DESCRIPTION

Fig. 29 Security Indicator

A security indicator is standard equipment on all instrument clusters (Fig. 29). However, on vehicles not equipped with the optional Vehicle Theft Alarm (VTA) or the optional Sentry Key Immobilizer System (SKIS), this indicator is electronically disabled. This indicator is located near the lower edge of the instrument cluster below the speedometer and to the right of the fuel gauge.

The security indicator consists of a small round cutout in the opaque layer of the instrument cluster overlay. The dark outer layer of the overlay prevents the indicator from being clearly visible when it is not illuminated. A red Light Emitting Diode (LED) behind the cutout in the opaque layer of the overlay causes the indicator to appear in red through the translucent outer layer of the overlay when it is illuminated from behind by the LED, which is soldered onto the instrument cluster electronic circuit board. The security indicator is serviced as a unit with the instrument cluster.

OPERATION

The security indicator gives an indication to the vehicle operator when the Vehicle Theft Alarm (VTA) is arming or is armed. This indicator is controlled on the instrument cluster circuit board by a hard wired input to the cluster from the Body Control Module (BCM) on the VTSS indicator driver circuit.

On models equipped with the Sentry Key Immobilizer System (SKIS), the security indicator also gives an indication to the vehicle operator of the status of the SKIS. The SKIS function of this indicator is controlled by the BCM based upon BCM programming and electronic messages received by the BCM from the Sentry Key REmote Entry Module (SKREEM) over the Programmable Communications Interface (PCI) data bus.

The security indicator Light Emitting Diode (LED) receives battery current on the instrument cluster electronic circuit board through a fused B(+) circuit at all times. Therefore, the LED can be illuminated regardless of the ignition switch position. The LED only illuminates when it is provided a path to ground by the BCM. The BCM will turn on the security indicator for the following reasons:

- **Bulb Test** - Only on vehicles equipped with the SKIS, each time the ignition switch is turned to the On position the SKREEM sends an electronic message to the BCM to illuminate the security indicator for about three seconds as a bulb test. The entire bulb test is a function of the SKREEM.
- **VTA Indication** - During the sixteen second VTA pre-arming function, the BCM will flash the security indicator on and off repeatedly at a steady, fast rate to indicate that the VTA is in the process of arming. Following successful VTA arming, the BCM flashes the security indicator on and off continuously at a slower rate to indicate that the VTA is armed. The security indicator continues flashing at the slower rate until the VTA is disarmed.
- **SKIS Lamp-On Message** - Each time the BCM receives a SKIS lamp-on message from the SKREEM,

SECURITY INDICATOR (Continued)

the security indicator will be illuminated. The indicator can be flashed on and off, or illuminated solid, as dictated by the SKREEM message. The indicator remains illuminated solid or continues to flash until the BCM receives a SKIS lamp-off message from the SKREEM, or until the ignition switch is turned to the Off position, whichever occurs first.

- **Communication Error** - Only on vehicles equipped with the SKIS, if the BCM receives no SKIS lamp-on or lamp-off messages from the SKREEM for twenty consecutive seconds, the security indicator is illuminated by the BCM. The indicator remains controlled and illuminated by the BCM until a valid SKIS lamp-on or lamp-off message is received from the SKREEM.
- **Actuator Test** - Only on vehicles equipped with the SKIS, each time the instrument cluster is put through the actuator test, the security indicator will be turned on, then off again during the bulb check portion of the test to confirm the functionality of the LED and the indicator control circuitry.

The BCM circuitry controls the security indicator through the VTSS indicator driver circuit whenever the ignition switch is in the Off position and the VTA is arming, armed, or triggered. On vehicles equipped with the SKIS, the SKREEM performs a self-test each time the ignition switch is turned to the On position to decide whether the SKIS is in good operating condition and whether a valid key is present in the ignition lock cylinder. The SKREEM then sends the proper lamp-on or lamp-off messages to the BCM. If the BCM flashes the security indicator upon ignition On, or turns on the security indicator solid after the bulb test, it indicates that a SKIS malfunction has occurred or that the SKIS is inoperative.

The VTSS indicator driver circuit between the BCM and the instrument cluster can be diagnosed using conventional diagnostic tools and methods. However, for proper diagnosis of the VTA, the SKIS, the SKREEM, the BCM, the PCI data bus, or the electronic message and hard wired inputs to the BCM that control the security indicator, a diagnostic scan tool is required. Refer to the appropriate diagnostic information.

SHIFT INDICATOR (TRANSFER CASE)

DESCRIPTION

PART TIME INDICATOR

A part time indicator is standard equipment on all instrument clusters (Fig. 30). However, on vehicles not equipped with an optional four-wheel drive system, this indicator is electronically disabled. This indicator is located near the lower edge of the speedometer gauge dial face in the instrument cluster.

PART
TIME

Fig. 30 Part Time Indicator

The part time indicator consists of a stencil-like cutout of the text “PART TIME” in the opaque layer of the instrument cluster overlay. The dark outer layer of the overlay prevents the indicator from being clearly visible when it is not illuminated. An amber Light Emitting Diode (LED) behind the cutout in the opaque layer of the overlay causes the “PART TIME” text to appear in amber through the translucent outer layer of the overlay when the indicator is illuminated from behind by the LED, which is soldered onto the instrument cluster electronic circuit board.

When the exterior lighting is turned On, the illumination intensity of the part time indicator is dimmable, which is adjusted along with the cluster illumination lighting using the panel lamps dimmer control ring on the left control stalk of the multifunction switch. The part time indicator is serviced as a unit with the instrument cluster.

FULL TIME INDICATOR

FULL
TIME

Fig. 31 Full Time Indicator

A full time indicator is standard equipment on all instrument clusters (Fig. 31). However, on vehicles not equipped with the optional Selec-Trac four-wheel drive system, this indicator is electronically disabled. This indicator is located near the lower edge of the speedometer gauge dial face in the instrument cluster.

The full time indicator consists of a stencil-like cutout of the text “FULL TIME” in the opaque layer of the instrument cluster overlay. The dark outer layer of the overlay prevents the indicator from being clearly visible when it is not illuminated. A green Light Emitting Diode (LED) behind the cutout in the opaque layer of the cluster overlay causes the “FULL TIME” text to appear in green through the translucent outer layer of the overlay when the indicator is illuminated from behind by the LED, which is soldered onto the instrument cluster electronic circuit board.

When the exterior lighting is turned On, the illumination intensity of the full time indicator is dimmable, which is adjusted along with the cluster illumination lighting using the panel lamps dimmer control ring on the left control stalk of the multi-

SHIFT INDICATOR (TRANSFER CASE) (Continued)

function switch. The full time indicator is serviced as a unit with the instrument cluster.

FOUR LOW MODE INDICATOR

Fig. 32 Four Low Mode Indicator

A four low mode indicator is standard equipment on all instrument clusters (Fig. 32). However, on vehicles not equipped with the optional four-wheel drive system, this indicator is electronically disabled. This indicator is located above the coolant temperature gauge and to the right of the tachometer in the instrument cluster.

The four low mode indicator consists of a stencil-like cutout of the words “4 LO MODE” in the opaque layer of the instrument cluster overlay. The dark outer layer of the overlay prevents the indicator from being clearly visible when it is not illuminated. An amber Light Emitting Diode (LED) behind the cutout in the opaque layer of the overlay causes the “4 LO MODE” text to appear in amber through the translucent outer layer of the overlay when the indicator is illuminated from behind by the LED, which is soldered onto the instrument cluster electronic circuit board.

When the exterior lighting is turned On, the illumination intensity of the four low mode indicator is dimmable, which is adjusted along with the cluster illumination lighting using the panel lamps dimmer control ring on the left control stalk of the multi-function switch. The four low mode indicator is serviced as a unit with the instrument cluster.

OPERATION

PART TIME INDICATOR

The part time indicator gives an indication to the vehicle operator whenever a part time operating mode of the four-wheel drive transfer case is selected. On vehicles equipped with the Command-Trac four-wheel drive system, the part time indicator lights when the transfer case is engaged in the “4H” or “4L” positions. On vehicles equipped with the Selec-Trac four-wheel drive system, the part time indicator lights when the transfer case is engaged in the “4 X 4 Part Time” position. This indicator is controlled by a transistor on the instrument cluster circuit board based upon cluster programming and electronic messages received by the cluster from the Powertrain Control Module (PCM) over the Programmable Communications Interface (PCI) data bus.

The instrument cluster must be electronically configured for the type of transfer case in the vehicle using a diagnostic scan tool in order to provide proper operation of the part time indicator. The part time indicator Light Emitting Diode (LED) is completely controlled by the instrument cluster logic circuit, and that logic will only allow this indicator to operate when the instrument cluster receives a battery current input on the fused ignition switch output (run-start) circuit. Therefore, the LED will always be off when the ignition switch is in any position except On or Start. The LED only illuminates when it is provided a path to ground by the instrument cluster transistor. The instrument cluster will turn on the part time indicator for the following reasons:

- **Part Time Lamp-On Message** - Each time the cluster receives a part time lamp-on message from the PCM indicating that a part time position of the four-wheel drive transfer case has been selected, the part time indicator will be illuminated. The indicator remains illuminated until the cluster receives a part time lamp-off message from the PCM or until the ignition switch is turned to the Off position, whichever occurs first.
- **Actuator Test** - Each time the cluster is put through the actuator test, the part time indicator will be turned on, then off again during the bulb check portion of the test to confirm the functionality of the LED and the cluster control circuitry.

The PCM continually monitors the transfer case switch to determine the driveline operating mode. The PCM then sends the proper part time lamp-on and lamp-off messages to the instrument cluster. For further diagnosis of the part time indicator or the instrument cluster circuitry that controls the indicator, (Refer to 8 - ELECTRICAL/INSTRUMENT CLUSTER - DIAGNOSIS AND TESTING).

For proper diagnosis of the transfer case switch, the PCM, the PCI data bus, or the electronic message inputs to the instrument cluster that control the part time indicator, a diagnostic scan tool is required. Refer to the appropriate diagnostic information.

FULL TIME INDICATOR

The full time indicator gives an indication to the vehicle operator whenever a full time operating mode of the four-wheel drive transfer case is selected. On vehicles equipped with the Selec-Trac four-wheel drive system, the full time indicator lights when the transfer case is engaged in the “4 X 4 Full Time” position. This indicator is controlled by a transistor on the instrument cluster circuit board based upon cluster programming and electronic messages received by the cluster from the Powertrain Control

SHIFT INDICATOR (TRANSFER CASE) (Continued)

Module (PCM) over the Programmable Communications Interface (PCI) data bus.

The instrument cluster must be electronically configured for the type of transfer case in the vehicle using a diagnostic scan tool in order to provide proper operation of the full time indicator. The full time indicator Light Emitting Diode (LED) is completely controlled by the instrument cluster logic circuit, and that logic will only allow this indicator to operate when the instrument cluster receives a battery current input on the fused ignition switch output (run-start) circuit. Therefore, the LED will always be off when the ignition switch is in any position except On or Start. The LED only illuminates when it is provided a path to ground by the instrument cluster transistor. The instrument cluster will turn on the full time indicator for the following reasons:

- **Full Time Lamp-On Message** - Each time the cluster receives a full time lamp-on message from the PCM indicating that a full time position of the four-wheel drive transfer case has been selected, the full time indicator will be illuminated. The indicator remains illuminated until the cluster receives a full time lamp-off message from the PCM or until the ignition switch is turned to the Off position, whichever occurs first.
- **Actuator Test** - Each time the cluster is put through the actuator test, the full time indicator will be turned on, then off again during the bulb check portion of the test to confirm the functionality of the LED and the cluster control circuitry.

The PCM continually monitors the transfer case switch to determine the driveline operating mode. The PCM then sends the proper full time lamp-on and lamp-off messages to the instrument cluster. For further diagnosis of the full time indicator or the instrument cluster circuitry that controls the indicator, (Refer to 8 - ELECTRICAL/INSTRUMENT CLUSTER - DIAGNOSIS AND TESTING).

For proper diagnosis of the transfer case switch, the PCM, the PCI data bus, or the electronic message inputs to the instrument cluster that control the full time indicator, a diagnostic scan tool is required. Refer to the appropriate diagnostic information.

FOUR LOW MODE INDICATOR

The four low mode indicator gives an indication to the vehicle operator that a “Low” operating mode of the four-wheel drive transfer case is selected. On vehicles equipped with the Command-Trac four-wheel drive system, the four low mode indicator lights when the transfer case is engaged in the “4L” position. On vehicles equipped with the Selec-Trac four-wheel drive system, the four low mode indicator lights when the transfer case is engaged in the “4 Lo” position.

This indicator is controlled by a transistor on the instrument cluster circuit board based upon the cluster programming and electronic messages received by the cluster from the Powertrain Control Module (PCM) over the Programmable Communications Interface (PCI) data bus. The instrument cluster must be electronically configured for the type of transfer case in the vehicle using a diagnostic scan tool in order to provide proper operation of the four low mode indicator.

The four low mode indicator Light Emitting Diode (LED) is completely controlled by the instrument cluster logic circuit, and that logic will only allow this indicator to operate when the instrument cluster receives a battery current input on the fused ignition switch output (run-start) circuit. Therefore, the LED will always be off when the ignition switch is in any position except On or Start. The LED only illuminates when it is provided a path to ground by the instrument cluster transistor. The instrument cluster will turn on the four low mode indicator for the following reasons:

- **Four Low Mode Lamp-On Message** - Each time the cluster receives a four low mode lamp-on message from the PCM indicating that a low range position of the four-wheel drive transfer case has been selected, the four low mode indicator will be illuminated. The indicator remains illuminated until the cluster receives a four low mode lamp-off message from the PCM or until the ignition switch is turned to the Off position, whichever occurs first.
- **Actuator Test** - Each time the cluster is put through the actuator test, the four low mode indicator will be turned on, then off again during the bulb check portion of the test to confirm the functionality of the LED and the cluster control circuitry.

The PCM continually monitors the transfer case switch to determine the driveline operating mode. The PCM then sends the proper four low mode lamp-on and lamp-off messages to the instrument cluster. For further diagnosis of the four low mode indicator or the instrument cluster circuitry that controls the indicator, (Refer to 8 - ELECTRICAL/INSTRUMENT CLUSTER - DIAGNOSIS AND TESTING).

For proper diagnosis of the transfer case switch, the PCM, the PCI data bus, or the electronic message inputs to the instrument cluster that control the four low mode indicator, a diagnostic scan tool is required. Refer to the appropriate diagnostic information.

SPEEDOMETER

DESCRIPTION

MPH km/h

Fig. 33 Speedometer Text

A speedometer is standard equipment on all instrument clusters. The speedometer is located next to the tachometer, just to the left of center in the instrument cluster. The speedometer consists of a movable gauge needle or pointer controlled by the instrument cluster circuitry, and a fixed 255 degree primary scale on the gauge dial face that reads left-to-right either from “0” to “120” mph, or from “0” to “240” km/h, depending upon the market for which the vehicle is manufactured.

Most versions also have a secondary inner scale on the gauge dial face that provides the equivalent opposite measurement units from the primary scale. Text appearing on the cluster overlay just above the hub of the speedometer needle abbreviates the unit of measure for the primary scale (i.e.: MPH or km/h), while the text for the unit of measure for the secondary scale (i.e.: MPH or km/h) is located adjacent to the low end of that scale (Fig. 33).

The speedometer primary scale text is white against a black field, while the major and minor primary scale increments are black against a silver field. If equipped, the secondary scale text and increments are light gray against a black field. All text and increments are clearly visible within the instrument cluster in daylight. When illuminated from behind by the panel lamps dimmer controlled cluster illumination lighting with the exterior lamps turned On, all primary scale text and major increments appear blue-green. The primary scale minor increments and the secondary scale are not illuminated. The red gauge needle is internally illuminated.

Gauge illumination is provided by replaceable incandescent bulb and bulb holder units located on the instrument cluster electronic circuit board. The speedometer is serviced as a unit with the instrument cluster.

OPERATION

The speedometer gives an indication to the vehicle operator of the vehicle road speed. This gauge is controlled by the instrument cluster circuit board based upon cluster programming and electronic messages received by the cluster from the Powertrain Control Module (PCM) over the Programmable Communications Interface (PCI) data bus.

The speedometer is an air core magnetic unit that receives battery current on the instrument cluster electronic circuit board through the fused ignition switch output (run-start) circuit whenever the ignition switch is in the On or Start positions. The cluster is programmed to move the gauge needle back to the low end of the scale after the ignition switch is turned to the Off position. The instrument cluster circuitry controls the gauge needle position and provides the following features:

- **Vehicle Speed Message** - Each time the cluster receives a vehicle speed message from the PCM it will calculate the correct vehicle speed reading and position the gauge needle at that relative speed position on the gauge scale. The cluster will receive a new vehicle speed message and reposition the gauge pointer accordingly about every 86 milliseconds. The gauge needle will continually be repositioned at the relative vehicle speed position on the gauge scale until the until the vehicle stops moving, or until the ignition switch is turned to the Off position, whichever occurs first.
- **Communication Error** - If the cluster fails to receive a speedometer message, it will hold the gauge needle at the last indication for about six seconds, or until the ignition switch is turned to the Off position, whichever occurs first. After six seconds, the gauge needle will return to the left end of the gauge scale.
- **Actuator Test** - Each time the cluster is put through the actuator test, the speedometer needle will be swept to several calibration points on the gauge scale in a prescribed sequence in order to confirm the functionality of the gauge and the cluster control circuitry.

The PCM continually monitors the vehicle speed information received from the Body Control Module (BCM) to determine the vehicle road speed. The PCM then sends the proper vehicle speed messages to the instrument cluster. For further diagnosis of the speedometer or the instrument cluster circuitry that controls the gauge, (Refer to 8 - ELECTRICAL/INSTRUMENT CLUSTER - DIAGNOSIS AND TESTING).

For proper diagnosis of the BCM, the PCM, the PCI data bus, or the electronic message inputs to the instrument cluster that control the speedometer, a diagnostic scan tool is required. Refer to the appropriate diagnostic information.

TACHOMETER

DESCRIPTION

RPM X 1000

Fig. 34 Tachometer Text

A tachometer is standard equipment on all instrument clusters. The tachometer is located next to the speedometer, just to the right of center in the instrument cluster. The tachometer consists of a movable gauge needle or pointer controlled by the instrument cluster circuitry and a fixed 255 degree scale on the gauge dial face that reads left-to-right from “0” to “7” for gasoline engines. On vehicles with a diesel engine, the scale reads from “0” to “5”. The text “RPM X 1000” imprinted on the cluster overlay directly above the hub of the tachometer needle identifies that each number on the tachometer scale is to be multiplied by 1000 rpm (Fig. 34).

The tachometer text is white against a black field, while the major and minor scale increments are black against a silver field. A light gray inner secondary scale provides a balanced appearance between the tachometer and speedometer, but is purely cosmetic. All text and increments are clearly visible within the instrument cluster in daylight. The gasoline engine tachometer has red increments designating the engine red line beginning at 5800 rpm, while the red increments for the diesel engine tachometer begin at 4000 rpm. When illuminated from behind by the panel lamps dimmer controlled cluster illumination lighting with the exterior lamps turned On, all text and major increments appear blue-green, while the red major increments still appear red. The minor increments and the secondary scale are not illuminated. The red gauge needle is internally illuminated.

Gauge illumination is provided by replaceable incandescent bulb and bulb holder units located on the instrument cluster electronic circuit board. The tachometer is serviced as a unit with the instrument cluster.

OPERATION

The tachometer gives an indication to the vehicle operator of the engine speed. This gauge is controlled by the instrument cluster circuit board based upon cluster programming and electronic messages received by the cluster from the Powertrain Control Module (PCM) over the Programmable Communications Interface (PCI) data bus.

The tachometer is an air core magnetic unit that receives battery current on the instrument cluster electronic circuit board through the fused ignition switch output (run-start) circuit whenever the ignition switch is in the On or Start positions. The cluster is programmed to move the gauge needle back to the low end of the scale after the ignition switch is turned to the Off position. The instrument cluster circuitry controls the gauge needle position and provides the following features:

- **Engine Speed Message** - Each time the cluster receives an engine speed message from the PCM it will calculate the correct engine speed reading and position the gauge needle at that relative speed position on the gauge scale. The cluster will receive a new engine speed message and reposition the gauge pointer accordingly about every 86 milliseconds. The gauge needle will continually be repositioned at the relative engine speed position on the gauge scale until the engine stops running, or until the ignition switch is turned to the Off position, whichever occurs first.
- **Communication Error** - If the cluster fails to receive an engine speed message, it will hold the gauge needle at the last indication for about six seconds, or until the ignition switch is turned to the Off position, whichever occurs first. After six seconds, the gauge needle will return to the left end of the gauge scale.
- **Actuator Test** - Each time the cluster is put through the actuator test, the tachometer needle will be swept to several calibration points on the gauge scale in a prescribed sequence in order to confirm the functionality of the gauge and the cluster control circuitry.

The PCM continually monitors the crankshaft position sensor to determine the engine speed. The PCM then sends the proper engine speed messages to the instrument cluster. For further diagnosis of the tachometer or the instrument cluster circuitry that controls the gauge, (Refer to 8 - ELECTRICAL/INSTRUMENT CLUSTER - DIAGNOSIS AND TESTING).

For proper diagnosis of the crankshaft position sensor, the PCM, the PCI data bus, or the electronic message inputs to the instrument cluster that control the tachometer, a diagnostic scan tool is required. Refer to the appropriate diagnostic information.

TIRE PRESSURE MONITOR INDICATOR

DESCRIPTION

Fig. 35 Tire Pressure Monitor Indicator

A Tire Pressure Monitor (TPM) indicator is standard equipment on all instrument clusters (Fig. 35). However, on vehicles not equipped with the optional TPM, this indicator is electronically disabled. This indicator is located above the coolant temperature gauge and to the right of the tachometer in the instrument cluster.

The TPM indicator consists of a stencil-like cutout of an icon that represents a cross-section of a tire with a centered exclamation point in the opaque layer of the instrument cluster overlay. The dark outer layer of the overlay prevents the indicator from being clearly visible when it is not illuminated. An amber Light Emitting Diode (LED) behind the cutout in the opaque layer of the overlay causes the icon to appear in amber through the translucent outer layer of the overlay when the indicator is illuminated from behind by the LED, which is soldered onto the instrument cluster electronic circuit board. The TPM indicator is serviced as a unit with the instrument cluster.

OPERATION

The Tire Pressure Monitor (TPM) indicator gives an indication to the vehicle operator of the status of the TPM system. This indicator is controlled by a transistor on the instrument cluster circuit board based upon cluster programming and electronic messages received by the cluster from the Sentry Key REmote Entry Module (SKREEM) over the Programmable Communications Interface (PCI) data bus.

The TPM indicator Light Emitting Diode (LED) is completely controlled by the instrument cluster logic circuit, and that logic will only allow this indicator to operate when the instrument cluster receives a battery current input on the fused ignition switch output (run-start) circuit. Therefore, the LED will always be off when the ignition switch is in any position except On or Start. The LED only illuminates when it is provide a path to ground by the instrument cluster transistor. The instrument cluster will turn on the TPM indicator for the following reasons:

- **Bulb Test** - Each time the ignition switch is turned to the On position, the SKREEM sends a TPM lamp-on message to the cluster to illuminate the TPM indicator for about three seconds as a bulb test.
- **TPM Lamp-On Message** - Each time the cluster receives a TPM lamp-on message from the SKREEM, the TPM indicator will be illuminated. The indicator remains illuminated until the cluster receives a TPM lamp-off message from the SKREEM or until the ignition switch is turned to the Off position, whichever occurs first.
- **Communication Error** - If the cluster receives no TPM lamp-on or lamp-off messages from the SKREEM for six consecutive seconds, the TPM indicator is illuminated by the instrument cluster. The indicator remains controlled and illuminated by the cluster until a valid TPM lamp-on or lamp-off message is received from the SKREEM.
- **Actuator Test** - Each time the cluster is put through the actuator test, the TPM indicator will be turned on, then off again during the bulb check portion of the test to confirm the functionality of the LED and the cluster control circuitry.

The SKREEM performs a self-test each time the ignition switch is turned to the On position to decide whether the TPM system is in good operating condition and whether the tire inflation pressures are too high or too low. The SKREEM then sends the proper TPM lamp-on or lamp-off messages to the instrument cluster. For further diagnosis of the TPM indicator or the instrument cluster circuitry that controls the indicator, (Refer to 8 - ELECTRICAL/INSTRUMENT CLUSTER - DIAGNOSIS AND TESTING). If the instrument cluster turns on the TPM indicator after the bulb test, it indicates that the inflation pressure of a tire is too low or that a malfunction has occurred and the TPM system is inoperative.

For proper diagnosis of the SKREEM, the PCI data bus, or the electronic message inputs to the instrument cluster that control the TPM indicator, a diagnostic scan tool is required. Refer to the appropriate diagnostic information.

TRANS TEMP INDICATOR

DESCRIPTION

Fig. 36 Transmission Overtemp Indicator

A transmission over-temperature indicator is standard equipment on all instrument clusters. However, on vehicles not equipped with an optional automatic transmission, this indicator is electronically disabled (Fig. 36). This indicator is located near the lower

TRANS TEMP INDICATOR (Continued)

edge of the instrument cluster, between the tachometer and the speedometer.

The transmission over-temperature indicator consists of a stencil-like cutout of the text “TRANS TEMP” in the opaque layer of the instrument cluster overlay. The dark outer layer of the overlay prevents the indicator from being clearly visible when it is not illuminated. An amber Light Emitting Diode (LED) behind the cutout in the opaque layer of the overlay causes the “TRANS TEMP” text to appear in amber through the translucent outer layer of the overlay when the indicator is illuminated from behind by the LED, which is soldered onto the instrument cluster electronic circuit board. The transmission over-temperature indicator is serviced as a unit with the instrument cluster.

OPERATION

The transmission over-temperature indicator gives an indication to the vehicle operator when the transmission fluid temperature is excessive, which may lead to accelerated transmission component wear or failure. This indicator is controlled by a transistor on the instrument cluster circuit board based upon cluster programming and electronic messages received by the cluster from the Powertrain Control Module (PCM) over the Programmable Communications Interface (PCI) data bus.

The transmission over-temperature indicator Light Emitting Diode (LED) is completely controlled by the instrument cluster logic circuit, and that logic will only allow this indicator to operate when the instrument cluster receives a battery current input on the fused ignition switch output (run-start) circuit. Therefore, the LED will always be off when the ignition switch is in any position except On or Start. The LED only illuminates when it is provided a path to ground by the instrument cluster transistor. The instrument cluster will turn on the transmission over-temperature indicator for the following reasons:

- **Bulb Test** - Each time the ignition switch is turned to the On position the transmission over-temperature indicator is illuminated for about three seconds as a bulb test.
- **Trans Over-Temp Lamp-On Message** - Each time the cluster receives a trans over-temp lamp-on message from the PCM indicating that the transmission fluid temperature is 135° C (275° F) or higher, the indicator will be illuminated. The indicator remains illuminated until the cluster receives a trans over-temp lamp-off message from the PCM, or until the ignition switch is turned to the Off position, whichever occurs first.
- **Actuator Test** - Each time the cluster is put through the actuator test, the transmission over-temperature indicator will be turned on, then off again during the bulb check portion of the test to confirm the functionality of the LED and the cluster control circuitry.

The PCM continually monitors the transmission temperature sensor to determine the transmission operating condition. The PCM then sends the proper transmission temperature messages to the instrument cluster. If the instrument cluster turns on the transmission over-temperature indicator due to a high transmission oil temperature condition, it may indicate that the transmission and/or the transmission cooling system are being overloaded or that they require service. For further diagnosis of the transmission over-temperature indicator or the instrument cluster circuitry that controls the indicator, (Refer to 8 - ELECTRICAL/INSTRUMENT CLUSTER - DIAGNOSIS AND TESTING).

For proper diagnosis of the transmission temperature sensor, the PCM, the PCI data bus, or the electronic message inputs to the instrument cluster that control the transmission over-temperature indicator, a diagnostic scan tool is required. Refer to the appropriate diagnostic information.

TURN SIGNAL INDICATOR

DESCRIPTION

Fig. 37 Turn Signal Indicators

Two turn signal indicators, one right and one left, are standard equipment on all instrument clusters (Fig. 37). These indicators are located near the upper edge of the instrument cluster, between the speedometer and the tachometer.

Each turn signal indicator consists of a stencil-like cutout of the International Control and Display Symbol icon for “Turn Warning” in the opaque layer of the instrument cluster overlay. The dark outer layer of the overlay prevents these icons from being clearly visible when they are not illuminated. A green Light-Emitting Diode (LED) behind each cutout in the opaque layer of the cluster overlay causes the icon to appear in green through the translucent outer layer of the overlay when the indicator is illuminated from behind by the LED, which is soldered onto the instrument cluster electronic circuit board. The turn signal indicators are serviced as a unit with the instrument cluster.

OPERATION

The turn signal indicators give an indication to the vehicle operator that the turn signals (left or right

TURN SIGNAL INDICATOR (Continued)

indicator flashing) or hazard warning signals (both left and right indicators flashing) have been selected and are operating. These indicators are controlled by two individual hard wired inputs from the combination flasher circuitry within the hazard switch to the instrument cluster electronic circuit board.

Each turn signal indicator Light Emitting Diode (LED) is grounded on the instrument cluster electronic circuit board at all times. Therefore, these indicators can be illuminated regardless of the ignition switch position. Each LED will only illuminate when it is provided battery current by the combination flasher circuitry of the hazard switch. The turn signal indicators are connected in parallel with the other turn signal circuits. This arrangement allows the turn signal indicators to remain functional, regardless of the condition of the other circuits in the turn signal and hazard warning systems.

The combination flasher outputs of the hazard switch to the instrument cluster turn signal indicator inputs can be diagnosed using conventional diagnostic tools and methods. Refer to the appropriate wiring information. For further diagnosis or more information on the combination flasher and hazard switch operation, (Refer to 8 - ELECTRICAL/LAMPS/LIGHTING - EXTERIOR/HAZARD SWITCH - DESCRIPTION).

WAIT-TO-START INDICATOR

DESCRIPTION

Fig. 38 Wait-To-Start Indicator

A wait-to-start indicator is only found in the instrument clusters of vehicles equipped with an optional diesel engine (Fig. 38). This indicator is located above the fuel gauge and to the left of the speedometer in the instrument cluster.

The wait-to-start indicator consists of a stencil-like cutout of the International Control and Display Symbol icon for “Diesel Preheat” in the opaque layer of the instrument cluster overlay. The dark outer layer of the overlay prevents the indicator from being clearly visible when it is not illuminated. An amber Light Emitting Diode (LED) behind the cutout in the opaque layer of the overlay causes the icon to appear in amber through the translucent outer layer of the overlay when the indicator is illuminated from behind by the LED, which is soldered onto the instrument cluster electronic circuit board. The wait-to-start indicator is serviced as a unit with the instrument cluster.

OPERATION

The wait-to-start indicator gives an indication to the vehicle operator when the diesel engine glow plugs are energized in their pre-heat operating mode. This indicator is controlled by a transistor on the instrument cluster circuit board based upon cluster programming and electronic messages received by the cluster from the Powertrain Control Module (PCM) over the Programmable Communications Interface (PCI) data bus.

The wait-to-start indicator Light Emitting Diode (LED) is completely controlled by the instrument cluster logic circuit, and that logic will only allow this indicator to operate when the instrument cluster receives a battery current input on the fused ignition switch output (run-start) circuit. Therefore, the LED will always be off when the ignition switch is in any position except On or Start. The LED only illuminates when it is provided a path to ground by the instrument cluster transistor. The instrument cluster will turn on the wait-to-start indicator for the following reasons:

- **Wait-To-Start Lamp-On Message** - Each time the cluster receives a wait-to-start lamp-on message from the PCM indicating that the glow plugs are heating and are too cool for efficient and reliable engine starting, the wait-to-start indicator will be illuminated. The indicator remains illuminated until the cluster receives a wait-to-start lamp-off message or until the ignition switch is turned to the Off position, whichever occurs first.
- **Actuator Test** - Each time the cluster is put through the actuator test, the wait-to-start indicator will be turned on, then off again during the bulb check portion of the test to confirm the functionality of the LED and the cluster control circuitry.

The PCM continually monitors the ambient air temperature and the glow plug pre-heater circuits to determine how long the glow plugs should be energized in their pre-heat operating mode. The PCM then sends the proper wait-to-start lamp-on and lamp-off messages to the instrument cluster. For further diagnosis of the wait-to-start indicator or the instrument cluster circuitry that controls the indicator, (Refer to 8 - ELECTRICAL/INSTRUMENT CLUSTER - DIAGNOSIS AND TESTING).

For proper diagnosis of the glow plug pre-heater control circuits, the PCM, the PCI data bus, or the electronic message inputs to the instrument cluster that control the wait-to-start indicator, a diagnostic scan tool is required. Refer to the appropriate diagnostic information.

WASHER FLUID INDICATOR

DESCRIPTION

LOWASH

Fig. 39 Washer Fluid Indicator

A washer fluid indicator is standard equipment on all instrument clusters (Fig. 39). This indicator is located within the odometer/trip odometer Vacuum Fluorescent Display (VFD) unit. However, on models equipped with the optional Electronic Vehicle Information Center (EVIC) the washer fluid indicator in the odometer VFD is electronically suppressed so as not to duplicate indications that are provided by the EVIC.

The washer fluid indicator consists of the text "LOWASH", which appears in place of the odometer/trip odometer information in the odometer VFD unit. The odometer VFD is soldered onto the cluster electronic circuit board and is visible through a window with a smoked clear lens located on the lower edge of the tachometer gauge dial face of the cluster overlay. The dark lens over the VFD prevents the indicator from being clearly visible when it is not illuminated. The "LOWASH" text appears in the same blue-green color and at the same lighting level as the odometer/trip odometer information when it is illuminated by the instrument cluster electronic circuit board. The washer fluid indicator is serviced as a unit with the instrument cluster.

OPERATION

The washer fluid indicator gives an indication to the vehicle operator that the fluid level in the washer reservoir is low. This indicator is controlled by the instrument cluster logic circuit based upon cluster programming and a hard wired input received by the cluster from the washer fluid level switch mounted on the washer reservoir.

The washer fluid indicator function of the Vacuum Fluorescent Display (VFD) is completely controlled by the instrument cluster logic circuit, and that logic will only allow this indicator to operate when the instrument cluster receives a battery current input on the fused ignition switch output (run-start) circuit. Therefore, the VFD washer fluid indication will always be off when the ignition switch is in any position except On or Start. The instrument cluster will turn on the washer fluid indicator for the following reasons:

- **Washer Fluid Level Switch Input** - Each time the cluster detects ground on the low washer fluid sense circuit (washer fluid level switch closed = washer fluid level low) the cluster applies an algorithm to ensure that the input is correct and not the result of fluid sloshing in the washer reservoir. The cluster tests the status of the circuit about seven milliseconds after the ignition switch is turned to the On position, and about once every second thereafter, then uses an internal counter to count up or down. When the counter accumulates thirty ground inputs on the circuit, the washer fluid indicator will be illuminated. If the vehicle is not moving when the washer fluid level switch input counter reaches thirty, the VFD will repeatedly and sequentially cycle its low washer fluid indication in two second intervals with the odometer/trip odometer information and any other active warnings including: door ajar, gate ajar, and glass ajar. If the vehicle is moving, or once the cluster of a non-moving vehicle receives an electronic vehicle speed message from the Powertrain Control Module (PCM) indicating a speed greater than zero, the warning sequence will consist of fifteen complete display cycles with an audible single chime tone accompanying each of the first two cycles, then revert to only the odometer/trip odometer display. Once the washer fluid indicator warning has completed, the washer fluid indicator is extinguished and will not repeat until the ignition switch is cycled.

The instrument cluster continually monitors the washer fluid level switch in the washer reservoir to determine the status of the washer fluid level. For further diagnosis of the washer fluid indicator or the instrument cluster circuitry that controls the indicator, (Refer to 8 - ELECTRICAL/INSTRUMENT CLUSTER - DIAGNOSIS AND TESTING).

The washer fluid level switch and circuits can be diagnosed using conventional diagnostic tools and methods. Refer to the appropriate wiring information. The washer fluid level switch also features a 3.3 kilohm diagnostic resistor connected in parallel between the switch input and output to provide the cluster with verification that the low washer fluid sense circuit is not open or shorted. This input can be monitored using a diagnostic scan tool. Refer to the appropriate diagnostic information.

WATER-IN-FUEL INDICATOR

DESCRIPTION

Fig. 40 Water-In-Fuel Indicator

A water-in-fuel indicator is only found in the instrument clusters of vehicles equipped with an optional diesel engine (Fig. 40). This indicator is

WATER-IN-FUEL INDICATOR (Continued)

located above the coolant temperature gauge and to the right of the tachometer in the instrument cluster.

The water-in-fuel indicator consists of a stencil-like cutout of the International Control and Display Symbol icon for “Water In Fuel” in the opaque layer of the instrument cluster overlay. The dark outer layer of the overlay prevents the indicator from being clearly visible when it is not illuminated. A red Light Emitting Diode (LED) behind the cutout in the opaque layer of the overlay causes the icon to appear in red through the translucent outer layer of the overlay when the indicator is illuminated from behind by the LED, which is soldered onto the instrument cluster electronic circuit board. The water-in-fuel indicator is serviced as a unit with the instrument cluster.

OPERATION

The water-in-fuel indicator gives an indication to the vehicle operator when there is excessive water in the fuel system. This indicator is controlled by a transistor on the instrument cluster electronic circuit board based upon cluster programming and electronic messages received by the cluster from the Powertrain Control Module (PCM) over the Programmable Communications Interface (PCI) data bus.

The water-in-fuel indicator Light Emitting Diode (LED) is completely controlled by the instrument cluster logic circuit, and that logic will only allow this indicator to operate when the instrument cluster receives a battery current input on the fused ignition switch output (run-start) circuit. Therefore, the LED will always be off when the ignition switch is in any position except On or Start. The LED only illuminates when it is provided a path to ground by the instrument cluster transistor. The instrument cluster will turn on the water-in-fuel indicator for the following reasons:

- **Bulb Test** - Each time the ignition switch is turned to the On position the water-in-fuel indicator is illuminated for about three seconds as a bulb test.
- **Water-In-Fuel Lamp-On Message** - Each time the cluster receives a water-in-fuel lamp-on message from the PCM indicating there is excessive water in the diesel fuel system, the water-in-fuel indicator will be illuminated. The indicator remains illuminated until the cluster receives a water-in-fuel lamp-off message, or until the ignition switch is turned to the Off position, whichever occurs first.
- **Actuator Test** - Each time the cluster is put through the actuator test, the water-in-fuel indicator will be turned on, then off again during the bulb check portion of the test to confirm the functionality of the LED and the cluster control circuitry.

The PCM continually monitors the water-in-fuel sensor to determine whether there is excessive water in the diesel fuel. The PCM then sends the proper water-in-fuel lamp-on and lamp-off messages to the instrument cluster. For further diagnosis of the water-in-fuel indicator or the instrument cluster circuitry that controls the indicator, (Refer to 8 - ELECTRICAL/INSTRUMENT CLUSTER - DIAGNOSIS AND TESTING).

For proper diagnosis of the water-in-fuel-sensor, the PCM, the PCI data bus, or the electronic message inputs to the instrument cluster that control the water-in-fuel indicator, a diagnostic scan tool is required. Refer to the appropriate diagnostic information.

LAMPS

TABLE OF CONTENTS

page

LAMPS/LIGHTING - EXTERIOR 1

LAMPS/LIGHTING - INTERIOR 73

LAMPS/LIGHTING - EXTERIOR

TABLE OF CONTENTS

page

LAMPS/LIGHTING - EXTERIOR
DESCRIPTION 3
OPERATION 6
WARNINGS - LAMPS/LIGHTING - EXTERIOR . . . 8
DIAGNOSIS AND TESTING
LAMPS/LIGHTING - EXTERIOR 9
SPECIFICATIONS
LAMPS/LIGHTING - EXTERIOR 18
BACKUP LAMP SWITCH
DESCRIPTION 19
OPERATION 19
DIAGNOSIS AND TESTING
BACKUP LAMP SWITCH 19
BRAKE LAMP SWITCH
DESCRIPTION 19
OPERATION 20
DIAGNOSIS AND TESTING
BRAKE LAMP SWITCH 20
REMOVAL 21
INSTALLATION 21
LAMP-HIGH MOUNTED STOP
REMOVAL
BULB 22
LAMP 22
INSTALLATION
BULB 22
LAMP 23
COMBINATION FLASHER
DESCRIPTION 23
OPERATION 23
DAYTIME RUNNING LAMP RELAY
DESCRIPTION 23
OPERATION 24
REMOVAL 24
INSTALLATION 25

page

FOG LAMP RELAY
DESCRIPTION
FRONT 25
REAR 25
OPERATION
FRONT 26
REAR 26
FRONT FOG LAMP
REMOVAL
BULB - GRILLE MOUNTED 27
BULB - FASCIA MOUNTED 27
LAMP - GRILLE MOUNTED 28
LAMP - FASCIA MOUNTED 28
INSTALLATION
BULB - GRILLE MOUNTED 29
BULB - FASCIA MOUNTED 29
LAMP - GRILLE MOUNTED 29
LAMP - FASCIA MOUNTED 30
ADJUSTMENTS
FRONT FOG LAMP UNIT 30
FRONT POSITION LAMP
REMOVAL - BULB 31
INSTALLATION - BULB 32
HAZARD SWITCH
DESCRIPTION 32
OPERATION 33
REMOVAL 33
INSTALLATION 34
HEADLAMP HIGH BEAM RELAY
DESCRIPTION 34
OPERATION 34
REMOVAL 35
INSTALLATION 36
HEADLAMP LEVELING MOTOR
DESCRIPTION 36
OPERATION 36
REMOVAL 37

INSTALLATION 37
HEADLAMP LEVELING SWITCH
DESCRIPTION 38
OPERATION 38
DIAGNOSIS AND TESTING
HEADLAMP LEVELING SWITCH 38
REMOVAL 39
INSTALLATION 39
HEADLAMP LOW BEAM RELAY
DESCRIPTION 40
OPERATION 40
HEADLAMP UNIT
REMOVAL
LAMP 40
BULB - NORTH AMERICA 41
BULB - EXPORT 42
INSTALLATION
LAMP 43
BULB - NORTH AMERICA 43
BULB - EXPORT 43
ADJUSTMENTS
HEADLAMP UNIT 44
LICENSE PLATE LAMP
REMOVAL
BULB - NORTH AMERICA 45
BULB - EXPORT 45
LAMP - NORTH AMERICA 46
LAMP - EXPORT 46
INSTALLATION
BULB - NORTH AMERICA 47
BULB - EXPORT 47
LAMP - NORTH AMERICA 47
LAMP - EXPORT 47
LAMP BAR
REMOVAL
BULB 47
LAMP 48
COVER 48
REINFORCEMENT 48
INSTALLATION
BULB 49
LAMP 50
COVER 50
REINFORCEMENT 50
ADJUSTMENTS
LIGHT BAR LAMP 51
LAMP BAR SWITCH
DESCRIPTION 51
OPERATION 52
REMOVAL 52
INSTALLATION 53
MARKER LAMP
REMOVAL
BULB 53
LAMP 53
INSTALLATION
BULB 54
LAMP 54
MULTI-FUNCTION SWITCH
DESCRIPTION 55
OPERATION 56
DIAGNOSIS AND TESTING
MULTI-FUNCTION SWITCH 59
REMOVAL 61
INSTALLATION 61
PARK BRAKE SWITCH
DESCRIPTION 62
OPERATION 62
DIAGNOSIS AND TESTING
PARK BRAKE SWITCH 62
REMOVAL 63
INSTALLATION 63
PARK LAMP RELAY
DESCRIPTION 64
OPERATION 64
PARK/TURN SIGNAL LAMP
REMOVAL
BULB 65
LAMP 65
INSTALLATION
BULB 66
LAMP 66
REAR LAMP UNIT
REMOVAL
BULB 66
LAMP 66
INSTALLATION
BULB 67
LAMP 67
REPEATER LAMP
REMOVAL
BULB 67
LAMP 67
INSTALLATION
BULB 68
LAMP 68
TRAILER TOW CONNECTOR
REMOVAL 68
INSTALLATION 69
TRAILER TOW RELAY
DESCRIPTION 69
OPERATION 69
REMOVAL 70
INSTALLATION 71
TRAILER TOW WIRING
DESCRIPTION 71
TURN SIGNAL CANCEL CAM
DESCRIPTION 72
OPERATION 72

LAMPS/LIGHTING - EXTERIOR

DESCRIPTION

The exterior lighting system for this model includes the following exterior lamp units (Fig. 1):

- **Center High Mounted Stop Lamp** - A standard equipment Center High Mounted Stop Lamp (CHMSL) is centered on the rear edge of the roof panel above the flip-up glass opening at the rear of the vehicle.
- **Front Fog Lamps** - Two optional front fog lamps are available on this model, grille opening panel mounted fog lamp units with an adjustable reflector that are secured behind a dedicated opening on each side of the grille panel below and inboard of the headlamps; or, free standing fascia mounted lamps with an adjustable mounting bracket that are secured to the upper horizontal surface of the front fascia below and inboard of the headlamps.
- **Front Park Lamps** - A standard equipment front park lamp unit is mounted high at each outboard end of the front fascia.
- **Front Position Lamps** - A front position lamp is integral to each headlamp unit in certain markets where they are required.
- **Front Side Marker Lamps/Reflectors** - A front side marker lamp unit is mounted low on each outward facing outboard end of the front fascia. In certain markets where the side repeater lamp is required, the bulb and socket is deleted from the front side marker lamp and only the lamp housing with its reflective lens is used.
- **Headlamps** - Standard equipment round headlamp units with a fixed lens and an adjustable reflector are secured to the grille opening panel at each side of the front grille. In certain markets where required, a headlamp leveling actuator motor and/or a front position lamp is/are integral to each headlamp.
- **License Plate Lamps** - Vehicles with a license plate tub integral to the left side of the rear fascia have a single rear license plate lamp unit mounted to the underside of the upper horizontal wall of the fascia tub formation. Vehicles with a license plate bracket secured to the spare tire carrier have two rear license plate lamps mounted to the underside of the upper horizontal wall of the tub formation in the bracket.
- **Light Bar Lamps** - Vehicles equipped with this option have a light bar mounted to the roof panel just rearward of the upper windshield opening header. Depending upon the market the vehicle is manufactured for, the light bar incorporates either two or four individually adjustable, forward-facing, auxiliary lamp units.
- **Rear Lamp Units** - A standard equipment rear lamp unit is mounted to the rear of each quarter panel on either side of the tailgate opening.
- **Side Repeater Lamps** - A side repeater lamp is mounted to each front fender just behind the front wheel in certain markets where they are required.
- **Rear Reflectors** - In certain markets where they are required, two rectangular, red reflectors are located on the rear bumper fascia, one just inboard and below each rear lamp unit.

These exterior lighting lamp units and their controls are combined to provide the following exterior lighting features:

- **Auxiliary (Off-Road) Lamps** - On vehicles equipped with the light bar lamp option, the auxiliary (off-road) light bar lamps include the clear bulbs, reflectors and clear lenses of each of the two or four adjustable lamps integral to the light bar.
- **Backup Lamps** - The backup (or reverse) lamps include a clear bulb, a reflector and a clear lens that are integral to each rear lamp unit.
- **Brake Lamps** - The brake (or stop) lamps include a clear bulb, a reflector and a red lens that are integral to each rear lamp unit and the CHMSL.
- **Daytime Running Lamps** - Vehicles manufactured for sale in Canada have Daytime Running Lamps (DRL) that illuminate the high beam filament of each headlamp bulb at a reduced intensity while driving with the exterior lighting turned Off.
- **Front Fog Lamps** - Both optional front fog lamps include the clear bulb, the reflector and the clear lens of each adjustable front fog lamp unit.
- **Hazard Warning Lamps** - The hazard warning lamps include the bulbs, reflectors and lenses of each lamp in the right and left, front and rear turn signal circuits.
- **Headlamps** - The headlamps include a single, dual filament halogen bulb, an adjustable reflector and a clear lens integral to each headlamp unit.
- **Optical Horn** - Also known as flash-to-pass, the beam selection function of the multi-function switch control stalk has a momentary intermediate position that allows the headlamp high beams to be flashed momentarily, without changing the headlamp beam selection.
- **Rear Fog Lamps** - Rear fog lamps are available only in certain markets where they are required equipment. The rear fog lamps include a clear bulb, a reflector and a red lens that are integral to each rear lamp unit.
- **Park Lamps** - The front park lamps include either the clear bulbs, the reflectors and the amber lenses of the front park lamp units or the clear position lamp bulb integral to each headlamp unit. On vehicles not equipped with repeater lamp units, the front park lamps also include the front side marker

LAMPS/LIGHTING - EXTERIOR (Continued)

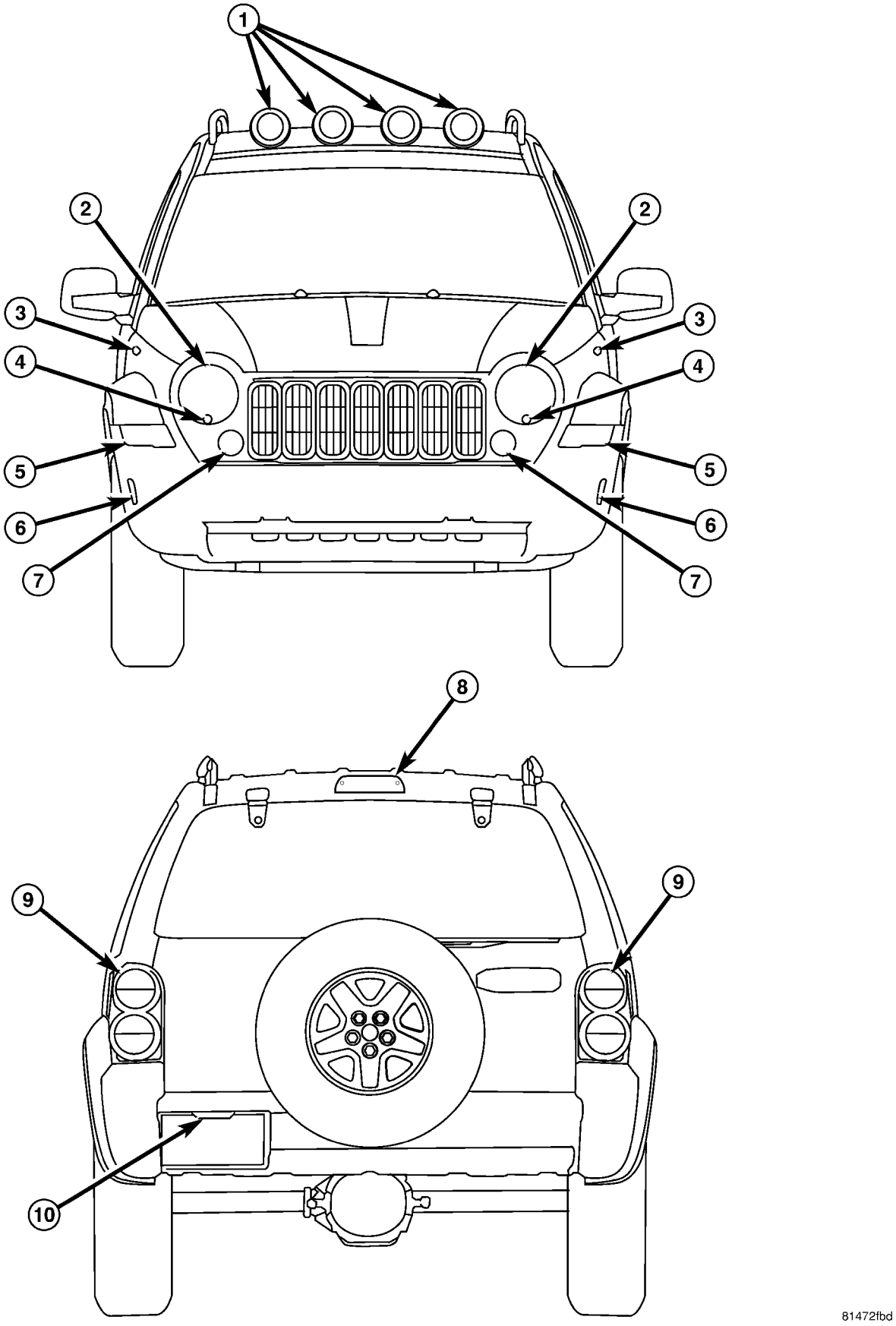

Fig. 1 Exterior Lamps

LAMPS/LIGHTING - EXTERIOR (Continued)

1 - LIGHT BAR LAMP (2 OR 4)
2 - HEADLAMP UNIT (2)
3 - REPEATER LAMP UNIT (2)
4 - FRONT POSITION LAMP (2)
5 - FRONT PARK/TURN LAMP UNIT (2)
6 - FRONT SIDE MARKER LAMP UNIT (2)
7 - FRONT FOG LAMP (2)
8 - CENTER HIGH MOUNTED STOP LAMP UNIT
9 - REAR LAMP UNIT
10 - LICENSE PLATE LAMP UNIT

lamps. The rear park lamps include a clear bulb, a reflector and a red lens integral to each rear lamp unit as well as the clear bulb and lens of the license plate lamp unit or units.

• **Turn Signal Lamps** - The front turn signal lamps include a clear bulb, a reflector, and an amber lens that are integral to each front park lamp unit and the front side marker lamps. In certain markets where required, the repeater lamps on each front fender replace the front side marker lamps in the front turn signal circuits. The rear turn signal lamps include an amber bulb, a reflector and a clear lens that are integral to each rear lamp unit.

Other components of the exterior lighting system for this model include:

• **Backup Lamp Switch** - Vehicles equipped with a manual transmission have a plunger-type backup lamp switch located on the transmission housing. A Transmission Range Sensor (TRS) integral to the solenoid pack on the valve body of the optional electronic automatic transmission performs the backup lamp switch function on models that are so equipped.

• **Body Control Module** - The Body Control Module (BCM) is located on the Junction Block (JB) under the driver side outboard end of the instrument panel. (Refer to 8 - ELECTRICAL/ELECTRONIC CONTROL MODULES/BODY CONTROL MODULE - DESCRIPTION).

• **Brake Lamp Switch** - A plunger-type brake lamp switch is located on the steering column support bracket under the instrument panel and actuated by the brake pedal arm.

• **Combination Flasher** - An electronic combination turn signal and hazard warning flasher is integral to the hazard warning switch in the center of the instrument panel.

• **Daytime Running Lamp Relay** - Vehicles manufactured for sale in Canada use a solid state Daytime Running Lamps (DRL) relay installed in the Junction Block (JB) instead of the conventional high beam relay.

• **Front Fog Lamp Relay** - Vehicles equipped with the optional front fog lamps have a front fog lamp relay located in the Junction Block (JB).

• **Hazard Switch** - The hazard switch is located near the center of the instrument panel and includes the electronic combination flasher circuitry for the hazard warning system and the turn signal system.

• **Headlamp Leveling Motor** - A headlamp leveling actuator motor is located on the back of each headlamp housing of vehicles manufactured for certain markets where the headlamp leveling feature is required.

• **Headlamp Leveling Switch** - A thumbwheel actuated headlamp leveling switch is mounted in the driver side instrument panel bezel of vehicles manufactured for certain markets where the headlamp leveling feature is required.

• **High Beam Relay** - A high beam relay is located in the Junction Block (JB) of all vehicles except those that are manufactured for sale in Canada. Canadian vehicles have a solid state Daytime Running Lamps (DRL) relay in the JB instead of the high beam relay.

• **Light Bar Lamp Switch** - A rocker actuated light bar lamp switch is mounted in the driver side instrument panel bezel of vehicles equipped with the optional light bar lamps.

• **Low Beam Relay** - A low beam relay is located in the Junction Block (JB) of all vehicles.

• **Multi-Function Switch** - The multi-function switch is located on the steering column, just below the steering wheel. The multi-function switch includes a left (lighting) control stalk and a right (wiper) control stalk. The left control stalk is dedicated to providing almost all of the driver controls for both the exterior and interior lighting systems.

• **Park Brake Switch** - A park brake switch is located on the park brake lever mechanism on the floor panel transmission tunnel between the two front seats.

• **Park Lamp Relay** - A park lamp relay is located in the Junction Block (JB) of all vehicles.

• **Rear Fog Lamp Relay** - Vehicles manufactured for certain markets where rear fog lamps are required equipment have a rear fog lamp relay located in the Junction Block (JB).

• **Trailer Tow Connector** - Vehicles equipped with a factory-installed trailer towing package have a heavy duty 7-way trailer tow connector installed in a bracket on the trailer hitch receiver.

• **Trailer Tow Relays** - Vehicles equipped with a factory-installed trailer towing package have a connector bank containing four relays located behind the right quarter trim panel. The four relays are used to supply fused ignition switch output (run), brake lamps, right turn signal, and left turn signal outputs to a trailer through the trailer tow wiring and connectors. Refer to the appropriate wiring information.

• **Trailer Tow Wiring Adapter** - Vehicles equipped with a factory-installed trailer towing package have a wiring adapter provided that adapts the

LAMPS/LIGHTING - EXTERIOR (Continued)

factory-installed heavy duty 7-way trailer tow connector to a conventional 4-way light duty connector.

Hard wired circuitry connects the exterior lighting system components to the electrical system of the vehicle. These hard wired circuits are integral to several wire harnesses, which are routed throughout the vehicle and retained by many different methods. These circuits may be connected to each other, to the vehicle electrical system and to the exterior lighting components through the use of a combination of soldered splices, splice block connectors, and many different types of wire harness terminal connectors and insulators. Refer to the appropriate wiring information. The wiring information includes wiring diagrams, proper wire and connector repair procedures, further details on wire harness routing and retention, as well as pin-out and location views for the various wire harness connectors, splices and grounds.

OPERATION

Following are paragraphs that briefly describe the operation of each of the major exterior lighting systems. The hard wired circuits and components of the exterior lighting systems may be diagnosed and tested using conventional diagnostic tools and procedures. Refer to the appropriate wiring information.

However, conventional diagnostic methods may not prove conclusive in the diagnosis of the Body Control Module (BCM), the ElectroMechanical Instrument Cluster (EMIC), the Powertrain Control Module (PCM) or the Programmable Communications Interface (PCI) data bus. The most reliable, efficient, and accurate means to diagnose the BCM, the EMIC, the PCM, the PCI data bus or the electronic bus message inputs and outputs related to the various exterior lighting systems requires the use of a diagnostic scan tool. Refer to the appropriate diagnostic information.

BACKUP LAMPS

The backup (or reverse) lamps have a path to ground at all times through a takeout and eyelet terminal of the rear lighting wire harness that is secured by a ground screw to the base of the right D-pillar behind the quarter trim panel. The backup lamps receive battery voltage from a fused ignition switch output (run) fuse on the back-up lamp feed circuit only when the backup lamp switch (manual transmission) or the Transmission Range Sensor (TRS - electronic automatic transmission) is closed by the gearshift mechanism within the transmission.

BRAKE LAMPS

The brake (or stop) lamps have a path to ground at all times through the rear lighting harness and a takeout and eyelet terminal of the rear body wire harness that is secured by a ground screw at the base of the right D-pillar behind the quarter trim panel. The Center High Mounted Stop Lamp (CHMSL) has a path to ground at all times through a takeout and eyelet terminal of the rear body wire harness that is secured by a ground screw at the base of the driver side (left or right) D-pillar behind the quarter trim panel. The brake lamps and CHMSL receive battery voltage from a fuse in the Junction Block (JB) on the brake lamp switch output circuit when the brake lamp switch is closed by the brake pedal arm.

DAYTIME RUNNING LAMPS

Vehicles manufactured for sale in Canada illuminate the high beam filament at a reduced intensity when the engine is running and the exterior lamps are turned off. This feature is enabled by the Body Control Module (BCM) and a solid state Daytime Running Lamps (DRL) relay, which is installed in the Junction Block (JB). The high beam relay is omitted from the JB on vehicles equipped with DRL.

When the BCM monitors an engine speed signal of greater than 450 rpm and the status of the exterior lighting switch input is Off, the BCM duty cycles the DRL relay to produce illumination of the headlamp high beam filaments at a reduced intensity. The BCM also provides normal headlamp high beam operation through the DRL relay on vehicles so equipped. When the DRL relay is energized, it provides battery voltage from a fused B(+) fuse in the JB to the headlamp high beam filament through the DRL relay output circuit.

FRONT FOG LAMPS

Vehicles equipped with optional front fog lamps have a premium Body Control Module (BCM), a front fog lamp relay installed in the Junction Block (JB), a front fog lamp switch integral to the left control stalk of the multi-function switch, and the ElectroMechanical Instrument Cluster (EMIC). The front fog lamps have a path to ground at all times through their connection to the front fascia wire harness from two take outs with eyelet terminals that are secured by ground screws to the left inner fender shield in the engine compartment.

The BCM controls front fog lamp operation by monitoring the exterior lighting switch input from the multi-function switch, then energizing or de-energizing the front fog lamp relay control coil. The BCM also sends the appropriate electronic message to the EMIC over the Programmable Communications Interface (PCI) data bus to control operation of the front fog lamp indicator.

When the front fog lamp relay is energized, it provides battery voltage from a fused B(+) fuse in the JB to the front fog lamps through the front fog lamp

LAMPS/LIGHTING - EXTERIOR (Continued)

relay output circuit. The BCM provides a battery saver (load shedding) feature for the front fog lamps, which will turn these lamps off if they are left on for more than about eight minutes with the ignition switch in the Off position. In certain markets where required, the front fog lamps are also turned off by the BCM whenever the headlamp high beams are selected. Each front fog lamp includes an integral adjustment screw to be used for static aiming of the fog lamp beams.

HAZARD WARNING LAMPS

With the hazard switch in the On position, the hazard warning system is activated causing the hazard switch button, the right and left turn signal indicators, and the right and left turn signal lamps begin to flash on and off. When the hazard warning system is activated, the circuitry within the hazard switch and electronic combination flasher unit will repeatedly energize and de-energize two internal relays that switch battery voltage from a fused B(+) fuse in the Junction Block (JB) to the turn signal indicators, and the turn signal lamps through the right and left turn signal circuits.

The flashing of the hazard switch button illumination lamp is performed internally by the hazard switch and combination flasher unit circuit board. The hazard warning lamps can also be energized by the Body Control Module (BCM) through a hazard lamp control circuit input to the hazard switch and combination flasher unit.

HEADLAMPS

The headlamp system includes the Body Control Module (BCM), a low beam relay installed in the Junction Block (JB), a high beam relay installed in the JB (except Canada), a solid state Daytime Running Lamps (DRL) relay installed in the JB (Canada only), the exterior lighting switches integral to the left (lighting) control stalk of the multi-function switch, and the ElectroMechanical Instrument Cluster (EMIC). The headlamps have a path to ground at all times through the grille opening reinforcement wire harness and two take outs with eyelet terminals of the headlamp and dash wire harness that are secured by ground screws to the left inner fender shield in the engine compartment.

The BCM controls headlamp operation by monitoring the exterior lighting switch inputs from the multi-function switch, then energizing or de-energizing the low beam relay, the high beam relay or the solid state circuitry of the DRL relay. It also sends electronic messages to the EMIC over the Programmable Communications Interface (PCI) data bus to control operation of the high beam indicator. When each respective relay is energized, it provides battery voltage from a fuse in the Power Distribution Center (PDC) through a relay (low beam, high beam, or DRL) output circuit.

The BCM also provides a battery saver (load shedding) feature for the headlamps, which will turn these lamps off if they are left on for more than about eight minutes with the ignition switch in the Off position; and, a headlamp delay feature with optional delay intervals that can be programmed using a diagnostic scan tool. Each headlamp includes an integral reflector adjustment screw to be used for static aiming of the headlamp beams.

HEADLAMP LEVELING

In certain markets where required, a headlamp leveling system is provided on the vehicle. The headlamp leveling system includes unique headlamp units equipped with a headlamp leveling actuator motor, and a rotary thumbwheel actuated headlamp leveling switch on the instrument panel. The headlamp leveling system allows the headlamp beams to be adjusted to one of four vertical positions to compensate for changes in inclination caused by the loading of the vehicle suspension.

The leveling motors are mechanically connected through an integral pushrod to the adjustable headlamp reflector. The headlamp leveling switch is a resistor multiplexed unit that provides one of four voltage outputs to the headlamp leveling motors. The headlamp leveling motors will move the headlamps to the selected position based upon the voltage input received from the switch. The headlamp leveling motors and switch have a path to ground at all times. The headlamp leveling components operate on battery voltage received through the fused park lamp relay output circuit so that the system will only operate when the exterior lighting is turned on.

LIGHT BAR LAMPS

The optional light bar (auxiliary off-road) lamps system the Body Control Module (BCM), the light bar switch on the instrument panel, and the ElectroMechanical Instrument Cluster. For all North American markets, the light bar switch receives battery voltage on a fused ignition switch output (run-start) circuit, which enables the switch to energize the lamps whenever the ignition switch is in the On or Start positions. For markets outside of North America, the light bar switch receives battery voltage from the park lamp relay in the Junction Block (JB) on the park lamp relay output circuit, and monitors an input from the low beam driver output circuit of the low beam relay in the JB, which enables the switch to energize the light bar lamps only with the park lamps On and the low beam headlamps Off.

LAMPS/LIGHTING - EXTERIOR (Continued)

The light bar lamps have a path to ground at all times through a take out and eyelet terminal of the instrument panel wire harness that is secured by a nut to a ground stud on the left instrument panel end bracket (left-hand drive) or the center of the instrument panel support structure (right-hand drive). The light bar switch controls light bar lamp operation by providing battery voltage from a fused B(+) fuse in the Power Distribution Center (PDC) to the lamps on the lightbar switch output circuit. When the lightbar switch output circuit is energized, the light bar switch also provides an input to the BCM on the lightbar switch sense circuit. The BCM then provides the appropriate electronic messages to the EMIC over the Programmable Communications Interface (PCI) data bus to control operation of the light bar indicator, the high beam indicator, or both indicators as required by the market for which the vehicle was manufactured.

PARK LAMPS

The park lamps system includes the Body Control Module (BCM), a park lamp relay installed in the Junction Block (JB), and the exterior lighting switch integral to the left (lighting) control stalk of the multi-function switch. The front park lamp and side marker lamp or, if equipped, the front position lamp bulbs each have a path to ground at all times through two take outs with eyelet terminals of the headlamp and dash wire harness that are secured by ground screws to the left inner fender shield in the engine compartment. The rear park and license plate lamps have a path to ground at all times through a take out and eyelet terminal of the rear body harness that is secured by a ground screw to the base of the right D-pillar behind the quarter trim panel.

The BCM controls park lamp operation by monitoring the exterior lighting switch input from the multi-function switch, then energizing or de-energizing the park lamp relay. When the park lamp relay is energized, it provides battery voltage from a fuse in the Power Distribution Center (PDC) through a park lamp relay output circuit to the appropriate lamp bulbs. On vehicles manufactured for North American markets only, the BCM also provides a battery saver (load shedding) feature for the park lamps, which will turn these lamps off if they are left on for more than about eight minutes with the ignition switch in the Off position.

REAR FOG LAMPS

Rear fog lamps are installed on vehicles manufactured for certain markets where they are required. The rear fog lamp system includes a premium Body Control Module (BCM), a rear fog lamp relay installed in the Junction Block (JB), and a rear fog lamp switch integral to the left (lighting) control stalk of the multi-function switch. The rear fog lamps operate in concert with the front fog lamps. The rear fog lamps have a path to ground at all times through a take out and eyelet terminal of the rear body wire harness that is secured by a ground screw to the base of the right D-pillar behind the quarter trim panel.

The BCM controls rear fog lamp operation by monitoring the exterior lighting switch input from the multi-function switch, then energizing or de-energizing the rear fog lamp relay control coil and sending the appropriate electronic messages to the instrument cluster over the Programmable Communications Interface (PCI) data bus to control rear fog lamp indicator operation. When the rear fog lamp relay is energized, it provides battery voltage from a fused B(+) fuse in the JB to the rear fog lamps through the rear fog lamp relay output circuit. The BCM also provides a battery saver (load shedding) feature for the rear fog lamps, which will turn these lamps off if they are left on for more than about eight minutes with the ignition switch in the Off position.

TURN SIGNAL LAMPS

When the left control stalk of the multi-function switch is moved up (right turn) or down (left turn), the turn signal system is activated causing the selected right or left turn signal indicators and turn signal lamps to flash on and off. When the turn signal system is activated, the circuitry within the turn signal switch and the hazard switch/electronic combination flasher unit will repeatedly energize and de-energize one of two internal relays that switch battery voltage from a fused ignition switch output (run) fuse in the Junction Block (JB) to the appropriate turn signal indicator and turn signal lamps.

The ElectroMechanical Instrument Cluster (EMIC) chime tone transducer will generate an audible turn signal cancel warning each time the vehicle is driven for a distance of about 3.2 kilometers (about two miles) with a turn signal indicator flashing. The EMIC uses Programmable Communications Interface (PCI) data bus distance messages from the Powertrain Control Module (PCM) and a hard wired input from the turn signal switch circuitry or the multi-function switch to determine when to sound the turn signal cancel warning.

WARNINGS - LAMPS/LIGHTING - EXTERIOR

WARNING:: To avoid personal injury or death, eye protection should be used when servicing any glass components.

LAMPS/LIGHTING - EXTERIOR (Continued)

CAUTION: Do not contaminate the glass of halogen bulbs with fingerprints or allow contact with other possibly oily surfaces. Reduced bulb life will result.

CAUTION: Do not use bulbs with higher candle power than indicated in the Bulb Application table (Refer to 8 - ELECTRICAL/LAMPS/LIGHTING - EXTERIOR - SPECIFICATIONS). In addition, do not use fuses, circuit breakers or relays having greater amperage value than indicated on the fuse panel or in the Owner's Manual. Damage to lamps, lenses, wiring and other related electrical components can result.

DIAGNOSIS AND TESTING

LAMPS/LIGHTING - EXTERIOR

WARNING: To avoid personal injury or death, on vehicles equipped with airbags, disable the supplemental restraint system before attempting any steering wheel, steering column, airbag, occupant classification system, seat belt tensioner, impact sensor, or instrument panel component diagnosis or service. Disconnect and isolate the battery negative (ground) cable, then wait two minutes for the system capacitor to discharge before performing further diagnosis or service. This is the only sure way to disable the supplemental restraint system. Failure to take the proper precautions could result in accidental airbag deployment.

NOTE: When diagnosing the exterior lighting circuits, remember that high generator output can burn out bulbs rapidly and repeatedly; and, that dim or flickering bulbs can be caused by low generator output or poor battery condition. If one of these symptoms is a problem on the vehicle, be certain to diagnose the battery and charging system, then repair as necessary.

NOTE: A good ground is necessary for proper lighting operation. If a lighting problem is being diagnosed that involves multiple symptoms, systems, or components, the problem can often be traced to a loose, corroded, or open ground.

The hard wired exterior lamp and lighting circuits may be diagnosed and tested using conventional diagnostic tools and procedures. Refer to the appropriate wiring information. The wiring information includes wiring diagrams, proper wire and connector repair procedures, details of wire harness routing and retention, connector pin-out information and location views for the various wire harness connectors, splices and grounds.

However, conventional diagnostic methods may not prove conclusive in the diagnosis of the Body Control Module (BCM), the ElectroMechanical Instrument Cluster (EMIC), the Powertrain Control Module (PCM), the Programmable Communications Interface (PCI) data bus, or the electronic message inputs used to provide exterior lamp and lighting service or many of the electronic features of the exterior lamp and lighting systems. The most reliable, efficient, and accurate means to diagnose the BCM, the EMIC, the PCM, the PCI data bus, and the electronic message inputs used for control of the exterior lamps and lighting system requires the use of a diagnostic scan tool. Refer to the appropriate diagnostic information.

LAMPS/LIGHTING - EXTERIOR (Continued)

BACKUP LAMPS

CONDITION	POSSIBLE CAUSES	CORRECTION
BACKUP LAMP DOES NOT ILLUMINATE	1. Faulty or missing fuse.	1. Test and replace backup lamp fuse as required.
	2. Faulty or missing bulb.	2. Test and replace backup lamp bulb as required.
	3. Faulty ground circuit.	3. Test and repair backup lamp ground circuit as required.
	4. Faulty supply circuit.	4. Test and repair open back-up lamp supply circuit as required.
	5. Faulty switch.	5. Test and replace backup lamp switch (manual transmission) or transmission range sensor (automatic transmission) as required.
BACKUP LAMP DOES NOT EXTINGUISH	1. Faulty supply circuit.	1. Test and repair shorted back-up lamp supply circuit as required.
	2. Faulty switch.	2. Test and replace backup lamp switch (manual transmission) or transmission range sensor (automatic transmission) as required.

BRAKE LAMPS

CONDITION	POSSIBLE CAUSES	CORRECTION
BRAKE LAMP DOES NOT ILLUMINATE	1. Faulty or missing fuse.	1. Test and replace brake lamp fuse as required.
	2. Faulty or missing bulb.	2. Test and replace brake lamp bulb as required.
	3. Faulty ground circuit.	3. Test and repair brake lamp ground circuit as required.
	4. Faulty supply circuit.	4. Test and repair open brake lamp switch output circuit as required.
	5. Faulty switch.	5. Test and replace brake lamp switch as required.
BRAKE LAMP DOES NOT EXTINGUISH	1. Faulty supply circuit.	1. Test and repair shorted brake lamp switch output circuit as required.
	2. Faulty switch.	2. Test and replace brake lamp switch as required.

LAMPS/LIGHTING - EXTERIOR (Continued)

DAYTIME RUNNING LAMPS

NOTE: Before performing the following tests, determine whether the headlamp low and high beams operate. If the headlamp high and low beams are also inoperative, diagnose and repair that problem before attempting to repair the Daytime Running Lamps.

CONDITION	POSSIBLE CAUSES	CORRECTION
DAYTIME RUNNING LAMPS WILL NOT ILLUMINATE	1. High beam relay installed.	1. Vehicles with DRL should have a solid state DRL relay, but no high beam relay. If vehicle has DRL relay installed, remove the high beam relay as required.
	2. Faulty or missing DRL relay.	2. Replace DRL relay with a known good unit and check operation. Replace DRL relay as required.
	3. Incorrect BCM programming.	3. Use a diagnostic scan tool to check and program correct country code into BCM as required.
	4. Faulty BCM inputs or outputs.	4. Use a diagnostic scan tool to test the BCM inputs or outputs. Refer to the appropriate diagnostic information.

FRONT FOG LAMPS

CONDITION	POSSIBLE CAUSES	CORRECTION
ONE FRONT FOG LAMP DOES NOT ILLUMINATE	1. Faulty or missing bulb.	1. Test and replace front fog lamp bulb as required.
	2. Faulty ground circuit.	2. Test and repair front fog lamp ground circuit as required.
	3. Faulty supply circuit.	3. Test and repair open front fog lamp relay output circuit as required.
BOTH FRONT FOG LAMPS DO NOT ILLUMINATE	1. Faulty or missing fuse.	1. Test and replace front fog lamp fuse as required.
	2. Faulty control circuit.	2. Test and repair open front fog lamp relay control circuit as required.
	3. Faulty or missing relay.	3. Test and replace front fog lamp relay as required.
	4. Faulty ground circuit.	4. Test and repair front fog lamp ground circuit as required.
	5. Faulty supply circuit.	5. Test and repair open front fog lamp relay output circuit as required.
	6. Faulty switch.	6. Test and replace multi-function switch as required.
	7. Faulty BCM inputs or outputs.	7. Use a diagnostic scan tool to test the BCM inputs and outputs. Refer to the appropriate diagnostic information.

LAMPS/LIGHTING - EXTERIOR (Continued)

CONDITION	POSSIBLE CAUSES	CORRECTION
FRONT FOG LAMPS DO NOT EXTINGUISH	1. Faulty supply circuit.	1. Test and repair shorted front fog lamp relay output circuit as required.
	2. Faulty control circuit.	2. Test and repair shorted front fog lamp relay control circuit as required.
	3. Faulty relay.	3. Test and replace front fog lamp relay as required.
	4. Faulty switch.	4. Test and replace multi-function switch as required.
	5. Faulty BCM inputs or outputs.	5. Use a diagnostic scan tool to test the BCM inputs and outputs. Refer to the appropriate diagnostic information.

HAZARD WARNING LAMPS

NOTE: Before performing the following tests, confirm whether the left and right turn signals operate satisfactorily. If the turn signals are inoperative or operate improperly, diagnose and repair that problem before attempting to repair the Hazard Warning Lamps.

CONDITION	POSSIBLE CAUSES	CORRECTION
HAZARD WARNING LAMPS DO NOT FLASH	1. Faulty or missing fuse.	1. Test and replace hazard warning fuse as required.
	2. Faulty ground circuit.	2. Test and repair hazard switch ground circuit as required.
	3. Faulty supply circuit.	3. Test and repair open hazard switch fused B(+) circuit as required.
	4. Faulty switch/flasher.	4. Test and replace hazard switch/ combination flasher unit as required.
HAZARD WARNING LAMPS DO NOT STOP FLASHING	1. Faulty switch/flasher.	1. Test and replace hazard switch/ combination flasher unit as required.

HEADLAMPS

CONDITION	POSSIBLE CAUSES	CORRECTION
ONE HEADLAMP DOES NOT ILLUMINATE	1. Faulty or missing fuse.	1. Test and replace headlamp fuse as required.
	2. Faulty or missing bulb.	2. Test and replace headlamp bulb as required.
	3. Faulty ground circuit.	3. Test and repair open headlamp ground circuit as required.
	4. Faulty supply circuit.	4. Test and repair open headlamp low beam, high beam, or DRL relay output circuit as required.

LAMPS/LIGHTING - EXTERIOR (Continued)

CONDITION	POSSIBLE CAUSES	CORRECTION
BOTH LOW OR HIGH BEAM HEADLAMPS DO NOT ILLUMINATE	1. Faulty or missing relay.	1. Test and replace low beam, high beam, or DRL relay as required. (Note: Vehicles with a DRL relay do not use a high beam relay. The DRL relay cannot be tested. Replace DRL relay with a known good unit and check operation. Replace DRL relay as required.)
	2. Faulty control circuit.	2. Test and repair open low beam or high beam relay control circuit as required.
	3. Faulty switch.	3. Test and replace multi-function switch as required.
	4. Faulty BCM inputs or outputs.	4. Use a diagnostic scan tool to test the BCM inputs and outputs. Refer to the appropriate diagnostic information.
HEADLAMPS DO NOT EXTINGUISH	1. Faulty supply circuit.	1. Test and repair shorted headlamp low beam, high beam, or DRL relay output circuit as required.
	2. Faulty control circuit.	2. Test and repair shorted low beam or high beam relay control circuit as required.
	3. Faulty relay.	3. Test and replace low beam, high beam, or DRL relay as required. (Note: Vehicles with a DRL relay do not use a high beam relay. The DRL relay cannot be tested. Replace DRL relay with a known good unit and check operation. Replace DRL relay as required.)
	4. Faulty switch.	4. Test and replace multi-function switch as required.
	5. Faulty BCM inputs or outputs.	5. Use a diagnostic scan tool to test the BCM inputs and outputs. Refer to the appropriate diagnostic information.
HEADLAMPS WILL NOT SWITCH FROM HIGH TO LOW BEAMS, OR FROM LOW TO HIGH BEAMS	1. Faulty relay.	1. Test and replace low beam, high beam, or DRL relay as required. (Note: Vehicles with a DRL relay do not use a high beam relay. The DRL relay cannot be tested. Replace DRL relay with a known good unit and check operation. Replace DRL relay as required.)
	2. Faulty switch.	2. Test and replace multi-function switch as required.
	3. Faulty BCM inputs or outputs.	3. Use a diagnostic scan tool to test the BCM inputs and outputs. Refer to the appropriate diagnostic information.

LAMPS/LIGHTING - EXTERIOR (Continued)

HEADLAMP LEVELING

NOTE: Before performing the following tests, confirm whether the park lamps operate properly. If the park lamps are inoperative, diagnose and repair that problem before attempting to repair the Headlamp Leveling System.

CONDITION	POSSIBLE CAUSES	CORRECTION
ONE LEVELING MOTOR IS INOPERATIVE	1. Faulty ground circuit.	1. Test and repair open leveling motor ground circuit as required.
	2. Faulty supply circuit.	2. Test and repair open leveling motor feed circuit as required.
	3. Faulty signal circuit.	3. Test and repair open headlamp adjust signal circuit as required.
	4. Faulty motor.	4. Test and replace headlamp leveling motor as required.
BOTH LEVELING MOTORS ARE INOPERATIVE	1. Faulty switch ground circuit.	1. Test and repair open leveling switch ground circuit as required.
	2. Faulty motor ground circuit.	2. Test and repair open leveling motor ground circuit as required.
	3. Faulty switch supply circuit.	3. Test and repair open leveling switch feed circuit as required.
	4. Faulty motor feed circuit.	4. Test and repair open leveling motor feed circuit as required.
	5. Faulty signal circuit.	5. Test and repair open or shorted leveling motor signal circuit as required.
	6. Faulty switch.	6. Test and replace leveling switch as required.
	7. Faulty motors.	7. Test and replace leveling motors as required.

LIGHT BAR LAMPS

NOTE: Before performing the following tests on vehicles manufactured for markets outside of North America, confirm whether both the park lamps and the low beam headlamps operate satisfactorily. If the park lamps or low beam headlamps are inoperative or operate improperly, diagnose and repair that problem before attempting to repair the light bar lamps.

CONDITION	POSSIBLE CAUSES	CORRECTION
ONE LIGHT BAR LAMP DOES NOT ILLUMINATE	1. Faulty or missing bulb.	1. Test and replace off road lamp bulb as required.
	2. Faulty ground circuit	2. Test and repair open off road lamp ground circuit as required.
	3. Faulty supply circuit.	Test and repair open lightbar switch output circuit as required.

LAMPS/LIGHTING - EXTERIOR (Continued)

CONDITION	POSSIBLE CAUSES	CORRECTION
NO LIGHT BAR LAMPS ILLUMINATE	1. Faulty or missing fuse.	1. Test and replace light bar lamp fuse as required.
	2. Faulty switch feed circuit.	2. Test and repair open fused B(+) circuit to light bar switch as required.
	3. Faulty ground circuit.	3. Test and repair open off road lamp ground circuit as required.
	4. Faulty supply circuit.	4. Test and repair open lightbar switch output circuit as required.
	5. Faulty switch ground circuit.	5. Test and repair open light bar switch ground circuit as required.
	6. Faulty switch supply circuit.	6. Test and repair open fused ignition switch output (run-start) circuit (North America) or park lamp relay output circuit (except North America) as required.
	7 Faulty switch.	7. Test and replace light bar lamp switch as required.
LIGHT BAR LAMPS DO NOT EXTINGUISH	1. Faulty supply circuit.	1. Test and repair shorted lightbar switch output circuit as required.
	2. Faulty switch.	2. Test and replace light bar lamp switch as required.
INOPERATIVE OR INCORRECT LIGHT BAR INDICATIONS IN INSTRUMENT CLUSTER	1. Faulty switch sense circuit.	1. Test and repair open/shorted lightbar switch sense circuit as required.
	2. Incorrect BCM programming.	2. Use a diagnostic scan tool to check and program correct country code into BCM as required.
	3. Faulty BCM inputs or outputs.	3. Use a diagnostic scan tool to test the BCM inputs or outputs. Refer to the appropriate diagnostic information.

LAMPS/LIGHTING - EXTERIOR (Continued)

PARK LAMPS

CONDITION	POSSIBLE CAUSES	CORRECTION
ONE OR SEVERAL, BUT NOT ALL LAMPS IN PARK LAMP CIRCUIT DO NOT ILLUMINATE	1. Faulty or missing fuse.	1. Test and replace park lamp fuse as required.
	2. Faulty or missing bulb.	2. Test and replace park lamp bulb as required.
	3. Faulty ground circuit.	3. Test and repair open park lamp ground circuit as required.
	4. Faulty supply circuit.	4. Test and repair open park lamp relay output circuit as required.
NO PARK LAMPS ILLUMINATE	1. Faulty or missing relay.	1. Test and replace park lamp relay as required.
	2. Faulty control circuit.	2. Test and repair open park lamp relay control circuit as required.
	3. Faulty switch.	3. Test and replace multi-function switch as required.
	4. Faulty BCM inputs or outputs.	4. Use a diagnostic scan tool to test the BCM inputs and outputs. Refer to the appropriate diagnostic information.
PARK LAMPS DO NOT EXTINGUISH	1. Faulty supply circuit.	1. Test and repair shorted park lamp relay output circuit as required.
	2. Faulty control circuit.	2. Test and repair shorted park lamp relay control circuit as required.
	3. Faulty relay.	3. Test and replace park lamp relay as required.
	4. Faulty switch.	4. Test and replace multi-function switch as required.
	5. Faulty BCM inputs or outputs.	5. Use a diagnostic scan tool to test the BCM inputs and outputs. Refer to the appropriate diagnostic information.

LAMPS/LIGHTING - EXTERIOR (Continued)

REAR FOG LAMPS

CONDITION	POSSIBLE CAUSES	CORRECTION
ONE REAR FOG LAMP DOES NOT ILLUMINATE	1. Faulty or missing bulb.	1. Test and replace rear fog lamp bulb as required.
	2. Faulty ground circuit.	2. Test and repair open rear fog lamp ground circuit as required.
	3. Faulty supply circuit.	3. Test and repair open rear fog lamp relay output circuit as required.
BOTH REAR FOG LAMPS DO NOT ILLUMINATE	1. Faulty or missing fuse.	1. Test and replace rear fog lamp fuse as required.
	2. Faulty ground circuit.	2. Test and repair open rear fog lamp ground circuit as required.
	3. Faulty supply circuit.	3. Test and repair open rear fog lamp relay output circuit as required.
	4. Faulty control circuit.	4. Test and repair open rear fog lamp relay control circuit as required.
	5. Faulty or missing relay.	5. Test and replace rear fog lamp relay as required.
	6. Faulty switch.	6. Test and replace multi-function switch as required.
	7. Incorrect BCM programming.	7. Use a diagnostic scan tool to check and program correct country code into BCM as required.
	8. Faulty BCM inputs or outputs.	8. Use a diagnostic scan tool to test the BCM inputs or outputs. Refer to the appropriate diagnostic information.
REAR FOG LAMPS DO NOT EXTINGUISH	1. Faulty supply circuit.	1. Test and repair shorted rear fog lamp relay output circuit as required.
	2. Faulty control circuit.	2. Test and repair shorted rear fog lamp relay control circuit as required.
	3. Faulty relay.	3. Test and replace rear fog lamp relay as required.
	4. Faulty switch.	4. Test and replace multi-function switch as required.
	5. Faulty BCM inputs or outputs.	5. Use a diagnostic scan tool to test the BCM inputs or outputs. Refer to the appropriate diagnostic information.

LAMPS/LIGHTING - EXTERIOR (Continued)

TURN SIGNAL LAMPS

CONDITION	POSSIBLE CAUSES	CORRECTION
ONE TURN SIGNAL LAMP DOES NOT ILLUMINATE	1. Faulty or missing bulb.	1. Test and replace turn signal bulb as required.
	2. Faulty ground circuit.	2. Test and repair open ground circuit as required.
	3. Faulty supply circuit.	3. Test and repair open right or left turn signal circuit as required.
ALL RIGHT SIDE AND/OR ALL LEFT SIDE TURN SIGNAL LAMPS DO NOT FLASH	1. Faulty sense circuit.	1. Test and repair open right or left turn switch sense circuit as required.
	2. Faulty signal circuit.	2. Test and repair open right or left turn signal circuit as required.
	3. Faulty switch.	3. Test and replace multi-function switch as required.
	4. Faulty flasher.	4. Replace hazard switch/combination flasher with a known good unit and check operation. Replace hazard switch/ combination flasher unit as required.
ALL RIGHT SIDE OR ALL LEFT SIDE TURN SIGNALS FLASH TOO RAPIDLY (MORE THAN 100 FLASHES PER MINUTE)	1. Faulty or missing bulb.	1. Test and replace faulty bulb as required.
	2. Faulty ground circuit.	2. Test and repair open ground circuit as required.
	3. Faulty signal circuit	3. Test and repair open right or left turn signal circuit as required.
	4. Faulty flasher.	4. Replace hazard switch/combination flasher with a known good unit and check operation. Replace hazard switch/ combination flasher unit as required.

SPECIFICATIONS

LAMPS/LIGHTING - EXTERIOR

BULB APPLICATION TABLE	
LAMP	BULB
BACKUP	3157 P27/7W
BRAKE	3157 P27/7W
CENTER HIGH MOUNTED STOP	921/W16W
FRONT FOG (FASCIA MOUNTED)	H3/55W
FRONT FOG (GRILLE MOUNTED)	9145/H10
FRONT PARK/TURN	3157 P27/7W
FRONT POSITION	W5W
FRONT SIDE MARKER	168

BULB APPLICATION TABLE	
LAMP	BULB
HEADLAMP (NORTH AMERICA)	9007QL
HEADLAMP (EXCEPT NORTH AMERICA)	H-4 W0W6
LICENSE (NORTH AMERICA)	168
LICENSE (EXCEPT NORTH AMERICA)	W5W
LIGHT BAR (OFF ROAD)	9006LL
REAR FOG	3157 P27/7W
REAR PARK/TAIL	3157 P27/7W
REAR TURN	3757A PY27/7W
SIDE REPEATER	W5W

BACKUP LAMP SWITCH

DESCRIPTION

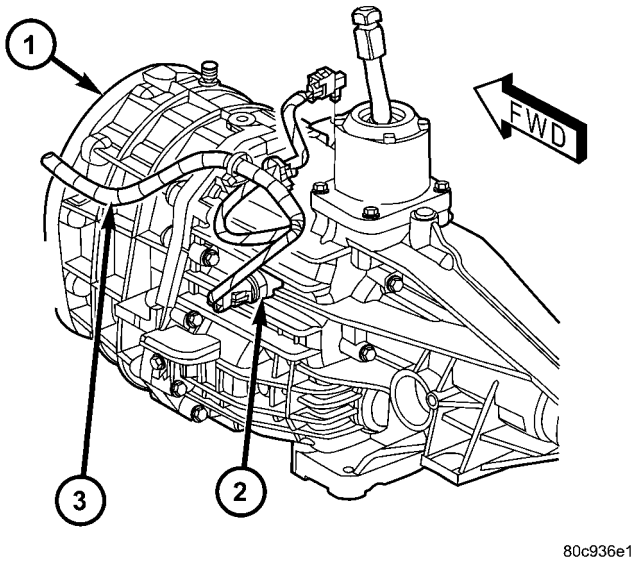

Fig. 2 Backup Lamp Switch - Typical

1 - MANUAL TRANSMISSION
2 - BACKUP LAMP SWITCH
3 - ENGINE WIRE HARNESS

Vehicles equipped with a manual transmission have a normally open, spring-loaded plunger type backup lamp switch (Fig. 2). Vehicles with an optional electronic automatic transmission have a Transmission Range Sensor (TRS) that is used to perform several functions, including that of the backup lamp switch. The TRS is described in further detail elsewhere in this service information.

The backup lamp switch is located in a threaded hole on the side of the manual transmission housing. The switch has a threaded body and a hex formation near the plunger end of the switch. An integral connector receptacle at the end of the switch opposite the plunger connects the switch to the vehicle electrical system through a take out and connector of the engine wire harness. When installed, only the switch connector and the hex formation are visible on the outside of the transmission housing. The backup lamp switch cannot be adjusted or repaired and, if faulty or damaged, the entire switch unit must be replaced.

OPERATION

The backup lamp switch controls the flow of battery voltage to the backup lamp bulbs through an output on the back-up lamp feed circuit. The switch plunger is mechanically actuated by the gearshift mechanism within the transmission, which will depress the switch plunger and close the switch contacts whenever the reverse gear has been selected. The switch receives battery voltage through a fuse in the Junction Block (JB) whenever the ignition switch is in the On position. The backup lamp switch and circuits can be tested using conventional diagnostic tools and methods.

DIAGNOSIS AND TESTING

BACKUP LAMP SWITCH

(1) Disconnect and isolate the battery negative cable.

(2) Raise and support the vehicle.

(3) Locate and disconnect the wire harness connector for the backup lamp switch.

(4) Check for continuity between the two terminal pins in the backup lamp switch connector.

(a) With the gear selector lever in the Reverse position, there should be continuity.

(b) With the gear selector lever in any position other than Reverse, there should be no continuity.

(5) If the switch fails either of these two continuity tests, replace the faulty backup lamp switch.

BRAKE LAMP SWITCH

DESCRIPTION

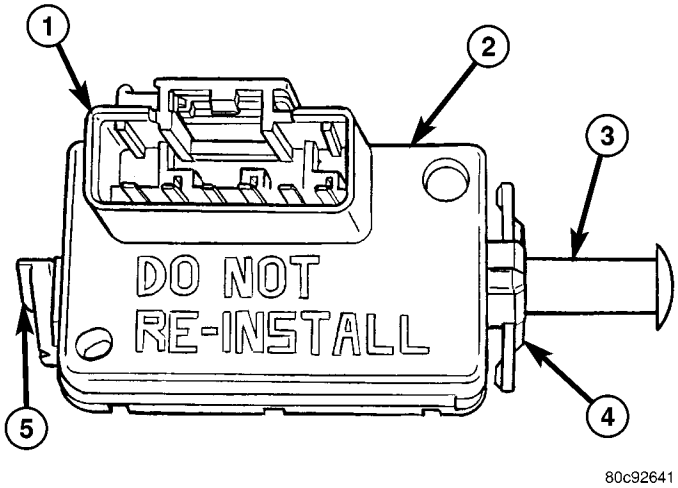

Fig. 3 Brake Lamp Switch

1 - CONNECTOR RECEPTACLE
2 - BRAKE LAMP SWITCH
3 - PLUNGER
4 - COLLAR
5 - LEVER

The brake lamp switch is a three circuit, spring-loaded plunger actuated switch that is secured to the steering column support bracket under the instrument panel on the driver side of the vehicle (Fig. 3). The molded plastic switch housing has an integral

BRAKE LAMP SWITCH (Continued)

connector receptacle containing six terminal pins and featuring a Connector Position Assurance (CPA) lock. The switch is connected to the vehicle electrical system through a dedicated take out of the instrument panel wire harness.

The switch plunger extends through a mounting collar on one end of the switch housing. The plunger has a one time telescoping self-adjustment feature that is activated after the switch is installed by moving an adjustment release lever on the opposite end of the switch housing clockwise, until it locks into a position that is parallel to the connector receptacle.

An installed brake lamp switch cannot be readjusted or repaired. If the switch is damaged, faulty, or removed from its mounting position for any reason, it must be replaced with a new unit.

OPERATION

The brake lamp switch controls three independent circuits. These circuits are described as follows:

- **Brake Lamp Switch Circuit** - A normally open brake lamp switch circuit receives a battery voltage input, and supplies this battery voltage to the brake lamps and the Controller Antilock Brake (CAB) on a brake lamp switch output circuit only when the brake pedal is depressed (brake lamp switch plunger released).
- **Brake Lamp Switch Signal Circuit** - A normally closed brake lamp switch signal circuit receives a direct path to ground, and supplies this ground input to the Powertrain Control Module (PCM) on a brake lamp switch sense circuit only when the brake pedal is released (brake lamp switch plunger is depressed).
- **Speed Control Circuit** - A normally closed speed control circuit receives a battery voltage input from the Powertrain Control Module on a speed control supply circuit, and supplies this battery voltage to the speed control servo solenoids (dump, vacuum, and vent) on a speed control brake switch output circuit only when the speed control system is turned On and the brake pedal is released (brake lamp switch plunger is depressed).

The components of the self-adjusting brake switch plunger consist of a two-piece telescoping plunger, a split plunger locking collar, and a release wedge. The release lever has a shaft with a wedge that spreads the plunger locking collar to an open or released position. After the switch is installed and the brake pedal is released, the plunger telescopes to the correct adjustment position. When the release lever is moved to the release position, the wedge is disengaged from the locking collar causing the collar to apply a clamping pressure to the two plunger halves, fixing the plunger length.

The brake lamp switch can be diagnosed using conventional diagnostic tools and methods.

DIAGNOSIS AND TESTING

BRAKE LAMP SWITCH

WARNING: To avoid personal injury or death, on vehicles equipped with airbags, disable the supplemental restraint system before attempting any steering wheel, steering column, airbag, occupant classification system, seat belt tensioner, impact sensor, or instrument panel component diagnosis or service. Disconnect and isolate the battery negative (ground) cable, then wait two minutes for the system capacitor to discharge before performing further diagnosis or service. This is the only sure way to disable the supplemental restraint system. Failure to take the proper precautions could result in accidental airbag deployment.

(1) Disconnect and isolate the battery negative cable.

CAUTION: Do not remove the brake lamp switch from the mounting bracket. The self-adjusting switch plunger is a one time only feature. If the switch is removed from the mounting bracket, it MUST be replaced with a new switch.

(2) Disconnect the wire harness connector from the brake lamp switch.

(3) Using an ohmmeter, perform the continuity tests at the terminal pins in the brake lamp switch connector receptacle (Fig. 4) as shown in the Brake Lamp Switch Tests table.

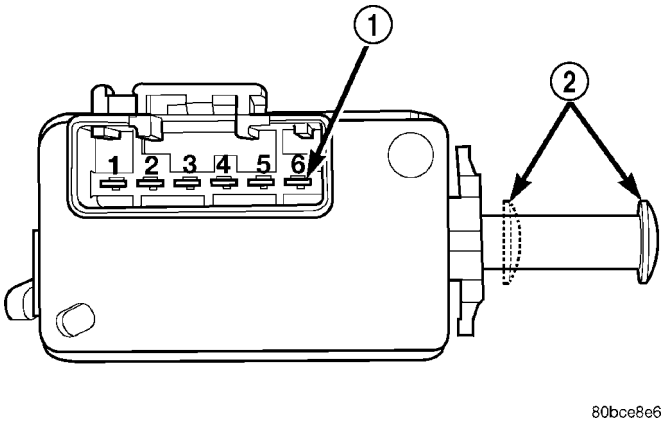

Fig. 4 Brake Lamp Switch Terminal Identification

1 - TERMINAL PINS
2 - PLUNGER TEST POSITIONS

BRAKE LAMP SWITCH (Continued)

BRAKE LAMP SWITCH TESTS	
PLUNGER POSITION	CONTINUITY BETWEEN
Released (Extended)	Pins 1 & 2
Compressed (Depressed)	Pins 3 & 4, 5 & 6

(4) If the switch fails any of the continuity tests, replace the faulty brake lamp switch as required.

REMOVAL

WARNING: To avoid personal injury or death, on vehicles equipped with airbags, disable the supplemental restraint system before attempting any steering wheel, steering column, airbag, occupant classification system, seat belt tensioner, impact sensor, or instrument panel component diagnosis or service. Disconnect and isolate the battery negative (ground) cable, then wait two minutes for the system capacitor to discharge before performing further diagnosis or service. This is the only sure way to disable the supplemental restraint system. Failure to take the proper precautions could result in accidental airbag deployment.

(1) Disconnect and isolate the battery negative cable.

(2) Locate the brake lamp switch near the support bracket on the lower steering column (Fig. 5).

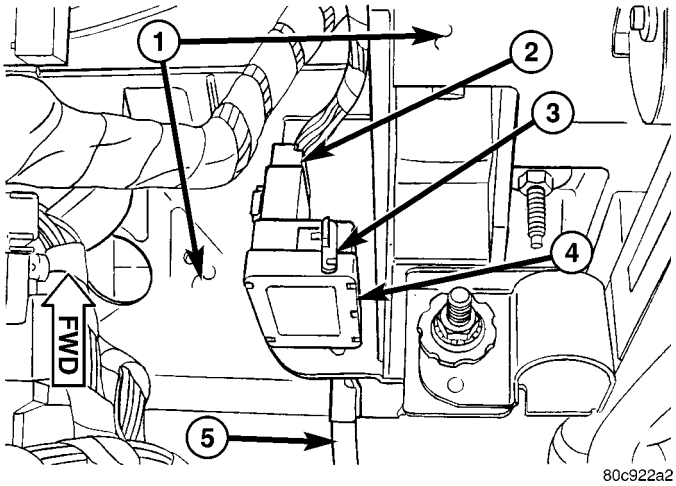

Fig. 5 Brake Lamp Switch Remove/Install

1 - STEERING COLUMN SUPPORT
2 - WIRE HARNESS CONNECTOR
3 - LEVER
4 - BRAKE LAMP SWITCH
5 - BRAKE PEDAL ARM

(3) Disconnect the wire harness connector from the brake lamp switch.

(4) Rotate the brake lamp switch housing counterclockwise about 30 degrees to align the tabs on the switch locking collar with the keyed mounting hole in the switch mounting bracket.

(5) Pull the switch straight back from the keyed hole to remove it from the bracket.

CAUTION: The brake lamp switch self-adjusting switch plunger is a one time only feature. If the switch is removed from the mounting bracket, it MUST be replaced with a new switch.

(6) Discard the removed brake lamp switch.

INSTALLATION

WARNING: To avoid personal injury or death, on vehicles equipped with airbags, disable the supplemental restraint system before attempting any steering wheel, steering column, airbag, occupant classification system, seat belt tensioner, impact sensor, or instrument panel component diagnosis or service. Disconnect and isolate the battery negative (ground) cable, then wait two minutes for the system capacitor to discharge before performing further diagnosis or service. This is the only sure way to disable the supplemental restraint system. Failure to take the proper precautions could result in accidental airbag deployment.

CAUTION: The brake lamp switch self-adjusting switch plunger is a one time only feature. If the switch is removed from the mounting bracket, it MUST be replaced with a new switch.

(1) Depress and hold the brake pedal in the depressed position.

(2) Align the tabs on the brake lamp switch locking collar with the keyed hole in the switch mounting bracket (Fig. 5).

(3) Insert the tabs on the brake lamp switch locking collar through the keyed hole in the switch mounting bracket until the switch housing is firmly seated against the bracket.

(4) Rotate the switch clockwise about 30 degrees to engage the tabs on the locking collar with the switch mounting bracket.

(5) Release the brake pedal.

CAUTION: Do not release or pull up on the brake pedal before the switch plunger adjustment has been completed.

(6) Release the brake pedal, but do not pull it upward.

(7) Rotate the plunger adjustment release lever clockwise until it locks into place. The lever should be parallel to the brake lamp switch connector receptacle. This action will set the switch plunger length

BRAKE LAMP SWITCH (Continued)

to a final adjustment position and cannot be undone. If not performed properly the first time, a new brake lamp switch **must** be installed.

(8) Reconnect the wire harness connector to the brake lamp switch.

(9) Reconnect the battery negative cable.

LAMP-HIGH MOUNTED STOP

REMOVAL

BULB

(1) Disconnect and isolate the battery negative cable.

(2) Remove the two screws that secure the Center High Mounted Stop Lamp (CHMSL) to the roof panel.

(3) Pull the CHMSL lens and housing away from the header panel far enough to access the lamp wiring and bulb socket on the back of the lamp (Fig. 6).

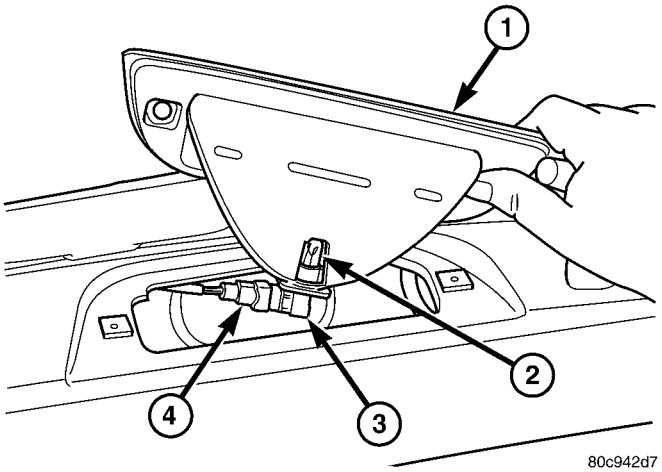

Fig. 6 Center High Mounted Stop Lamp Bulb Remove/Install

1 - CHMSL UNIT
2 - BULB
3 - SOCKET
4 - BODY WIRE HARNESS CONNECTOR

(4) Firmly grasp the socket on the back of the lamp housing and rotate it counterclockwise about 30 degrees to unlock it.

(5) Pull the socket and bulb straight out from the keyed opening in the housing.

(6) Pull the base of the bulb straight out of the socket.

LAMP

(1) Disconnect and isolate the battery negative cable.

(2) Remove the two screws that secure the Center High Mounted Stop Lamp (CHMSL) to the rear of the roof panel (Fig. 7).

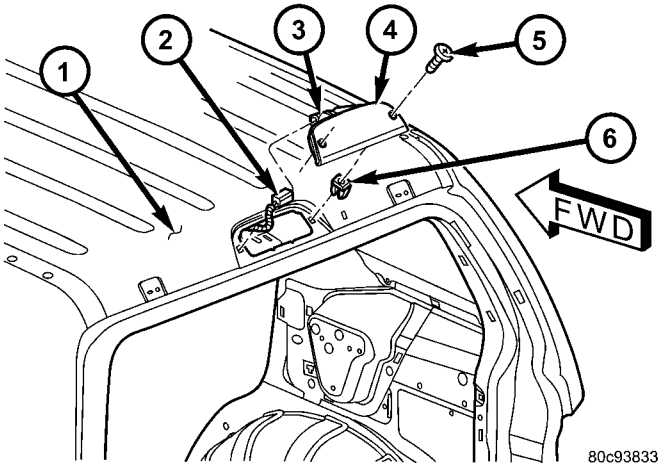

Fig. 7 Center High Mounted Stop Lamp Remove/ Install

1 - ROOF PANEL
2 - BODY WIRE HARNESS CONNECTOR
3 - BULB SOCKET
4 - CHMSL
5 - SCREW (2)
6 - PLASTIC NUT (2)

(3) Pull the CHMSL away from the roof panel far enough to access and disconnect the wire harness connector from the lamp socket.

(4) Remove the CHMSL from the roof panel.

INSTALLATION

BULB

CAUTION: Always use the correct bulb size and type for replacement. An incorrect bulb size or type may overheat and cause damage to the lamp, the socket and/or the lamp wiring.

(1) Align the base of the bulb with the socket.

(2) Push the bulb straight into the socket until the base is firmly seated.

(3) Align the socket and bulb with the keyed opening on the back of CHMSL housing (Fig. 6).

(4) Insert the socket and bulb into the housing until the socket is firmly seated.

(5) Rotate the socket clockwise about 30 degrees to lock it into place.

(6) Position the CHMSL into the opening in the rear roof panel.

(7) Install and tighten the two screws that secure the CHMSL to the roof panel. Tighten the screws to 2 N·m (21 in. lbs.).

(8) Reconnect the battery negative cable.

LAMP-HIGH MOUNTED STOP (Continued)

LAMP

(1) Check to be certain that the two plastic nuts are properly positioned and in good condition on each side of the roof panel opening for the Center High Mounted Stop Lamp (CHMSL) (Fig. 7).

(2) Position the CHMSL near the roof panel opening.

(3) Reconnect the wire harness connector to the CHMSL socket.

(4) Install and tighten the two screws that secure the CHMSL to the roof panel. Tighten the screws to 2 N·m (21 in. lbs.).

(5) Reconnect the battery negative cable.

COMBINATION FLASHER

DESCRIPTION

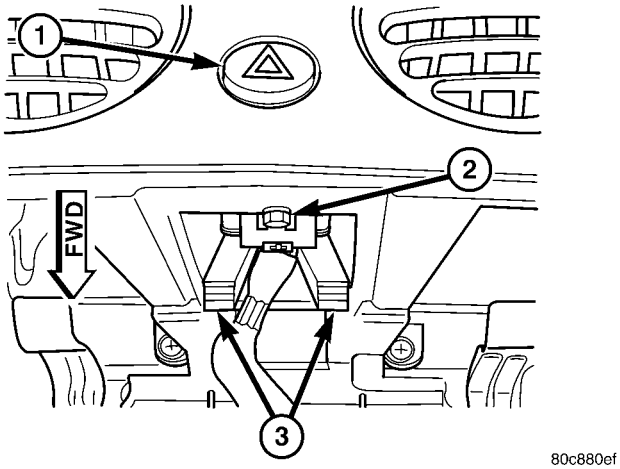

Fig. 8 Hazard Switch

1 - HAZARD SWITCH BUTTON
2 - SCREW (1)
3 - MOUNTING BRACKET TABS

The combination flasher is integral to the hazard switch unit located behind the hazard switch button near the center of the instrument panel (Fig. 8). The combination flasher is a smart relay that functions as both the turn signal system and the hazard warning system flasher. The combination flasher contains active electronic Integrated Circuitry (IC) elements.

This flasher is designed to handle the current flow requirements of the factory-installed lighting. If supplemental lighting is added to the turn signal lamp circuits, such as when towing a trailer with lights, the combination flasher will automatically try to compensate to keep the flash rate the same.

The combination flasher cannot be repaired or adjusted and, if faulty or damaged, the hazard switch unit must be replaced.

OPERATION

The combination flasher has the following inputs and outputs: fused B(+), fused ignition switch output, right turn signal sense, left turn signal sense, and one output each for the right and left turn signal circuits. The combination flasher also receives an internal input through the hazard switch and, on vehicles equipped with the optional Vehicle Theft Security System (VTSS), receives an input from the Body Control Module (BCM) in order to flash the turn signal lamps as an optical alert feature of that system.

Battery voltage is supplied to the flasher on a fused B(+) circuit so that the flasher can perform the hazard warning flasher function, regardless of the ignition switch position. The flasher also receives battery voltage on a separate fused ignition switch output (run-start) circuit to perform the turn signal flasher function.

The Integrated Circuit (IC) within the combination flasher contains the logic that controls the flasher operation and the flash rate. The IC receives separate sense ground inputs from the multi-function switch for the right and left turn signals, and from the hazard switch contacts or the BCM for the hazard warning signals. A special design feature of the combination flasher allows it to ″sense″ that a turn signal circuit or bulb is not operating, and provide the driver an indication of the condition by flashing the remaining bulbs in the affected circuit at a higher rate (120 flashes-per-minute or higher).

Because of the active electronic elements within the combination flasher, it cannot be tested with conventional automotive electrical test equipment. If the combination flasher is believed to be faulty, test the turn signal and hazard warning systems before replacing the flasher. If no problems are found, replace the hazard warning switch with a known good unit to confirm system operation.

DAYTIME RUNNING LAMP RELAY

DESCRIPTION

The Daytime Running Lamp (DRL) relay (Fig. 9) is a solid state relay that is used only on vehicles manufactured for sale in Canada. The DRL relay is installed in the Junction Block (JB) on the driver side outboard end of the instrument panel. Vehicles equipped with this relay **do not** have a headlamp high beam relay installed in the JB.

The DRL relay features a die cast aluminum housing that serves to contain the solid state circuitry of the relay as well as to perform as a heat sink. Potting material fills the base of the housing to enclose and protect the circuitry.

DAYTIME RUNNING LAMP RELAY (Continued)

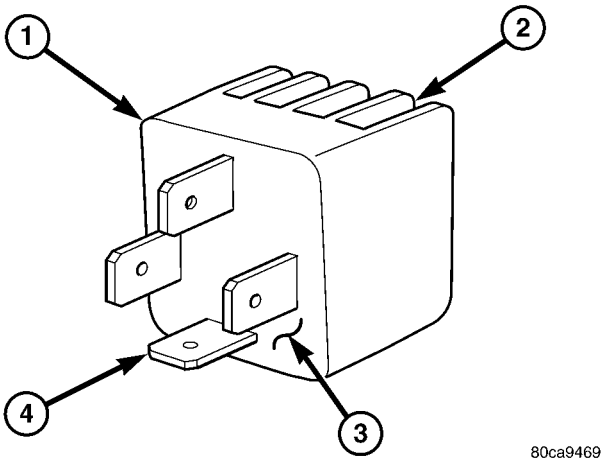

Fig. 9 Daytime Running Lamp Relay

1 - DRL RELAY
2 - HEAT SINK
3 - POTTING MATERIAL
4 - TERMINAL (4)

Four male spade terminals exit the base of the relay housing through the potting material to connect the relay to the vehicle electrical system. These terminals are laid out in a footprint that is similar to that of a conventional International Standards Organization (ISO) relay; however, a standard ISO relay must never be installed in place of the DRL relay.

The DRL relay cannot be adjusted or repaired and, if faulty or damaged, it must be replaced with a new unit.

OPERATION

The Daytime Running Lamps (DRL) relay is a solid state relay that controls the flow of battery voltage to the high beam filaments of both headlamp bulbs based upon a duty cycle control input received from the Body Control Module (BCM) of vehicles equipped with the DRL feature. By cycling the DRL relay output, the BCM controls the illumination intensity of the high beam filaments. The DRL relay is connected to the vehicle electrical system through a receptacle in the Junction Block (JB). The inputs and outputs of the DRL relay include:

- **Battery Voltage Input** - The DRL relay receives battery voltage on a fused B(+) circuit from a fused B(+) fuse in the Power Distribution Center (PDC).
- **Ground Input** - The DRL relay receives a path to ground through a splice block with an eyelet terminal that is secured by a nut to a ground stud on the driver side instrument panel end bracket near the JB.
- **Control Input** - The DRL relay control input is received from the BCM and/or the momentary optical horn (flash-to-pass) output of the multi-function switch through a high beam relay control circuit.
- **Control Output** - The DRL relay supplies Pulse Width Modulated (PWM) battery voltage to the headlamp high beam filaments through the high beam relay output circuit.

Because of active electronic elements within the DRL relay, it cannot be diagnosed or tested using conventional diagnostic tools and procedures. If the DRL relay is believed to be faulty, test and repair the headlamp system as necessary. If no problem is found in the headlamp system, replace the DRL relay with a known good unit to confirm system operation.

The DRL relay cannot be repaired and, if faulty or damaged, it must be replaced. Refer to the appropriate wiring information for diagnosis and testing of the DRL relay and for complete exterior lighting wiring diagrams.

REMOVAL

WARNING: To avoid personal injury or death, on vehicles equipped with airbags, disable the supplemental restraint system before attempting any steering wheel, steering column, airbag, occupant classification system, seat belt tensioner, impact sensor, or instrument panel component diagnosis or service. Disconnect and isolate the battery negative (ground) cable, then wait two minutes for the system capacitor to discharge before performing further diagnosis or service. This is the only sure way to disable the supplemental restraint system. Failure to take the proper precautions could result in accidental airbag deployment.

NOTE: The DRL relay is installed in the Junction Block (JB) on the driver side outboard end of the instrument panel. Vehicles equipped with this relay MUST NOT have a headlamp high beam relay installed in the JB. Also, although the terminals of the DRL relay are laid out in a footprint that is similar to that of a conventional International Standards Organization (ISO) relay, a standard ISO relay MUST NEVER be installed in the place of the DRL relay.

(1) Disconnect and isolate the battery negative cable.

(2) Remove the trim from the driver side end of the instrument panel. (Refer to 23 - BODY/INSTRUMENT PANEL/INSTRUMENT PANEL END CAP - REMOVAL).

(3) Remove the Daytime Running Lamp (DRL) relay by grasping it firmly and pulling it straight out from the receptacle in the JB (Fig. 10).

DAYTIME RUNNING LAMP RELAY (Continued)

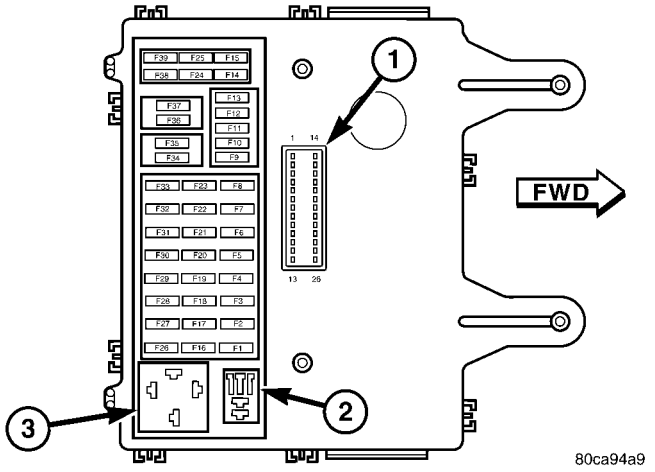

Fig. 10 Junction Block - Outboard Side (RHD Shown - Rotate 180° for LHD)

1 - JB/BCM CONNECTOR
2 - HIGH BEAM RELAY (RECEPTACLE MUST BE EMPTY WITH DRL RELAY INSTALLED)
3 - DRL RELAY (RECEPTACLE MUST BE EMPTY WITH HIGH BEAM RELAY INSTALLED)

INSTALLATION

WARNING: To avoid personal injury or death, on vehicles equipped with airbags, disable the supplemental restraint system before attempting any steering wheel, steering column, airbag, occupant classification system, seat belt tensioner, impact sensor, or instrument panel component diagnosis or service. Disconnect and isolate the battery negative (ground) cable, then wait two minutes for the system capacitor to discharge before performing further diagnosis or service. This is the only sure way to disable the supplemental restraint system. Failure to take the proper precautions could result in accidental airbag deployment.

NOTE: The DRL relay is installed in the Junction Block (JB) on the driver side outboard end of the instrument panel. Vehicles equipped with this relay MUST NOT have a headlamp high beam relay installed in the JB. Also, although the terminals of the DRL relay are laid out in a footprint that is similar to that of a conventional International Standards Organization (ISO) relay, a standard ISO relay MUST NEVER be installed in the place of the DRL relay.

(1) Position the Daytime Running Lamp (DRL) relay to the proper receptacle in the JB (Fig. 10).

(2) Align the DRL relay terminals with the cavities in the JB receptacle.

(3) Push firmly and evenly on the top of the DRL relay until the relay base is fully seated in the JB receptacle.

(4) Reinstall the trim onto the driver side outboard end of the instrument panel. (Refer to 23 - BODY/INSTRUMENT PANEL/INSTRUMENT PANEL END CAP - INSTALLATION).

(5) Reconnect the battery negative cable.

FOG LAMP RELAY

DESCRIPTION

FRONT

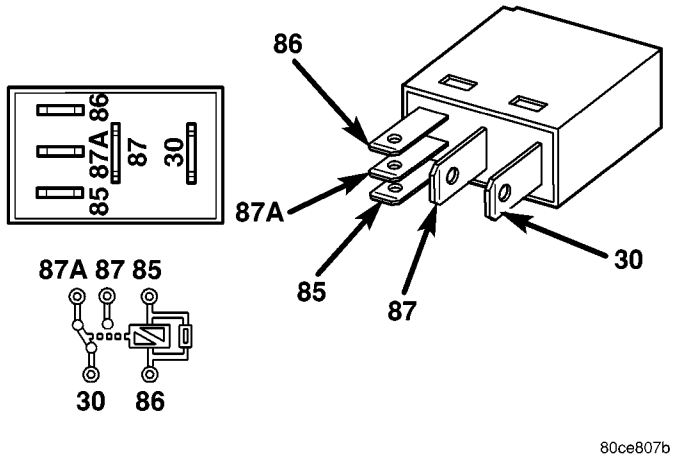

Fig. 11 ISO Micro Relay

30 - COMMON FEED
85 - COIL GROUND
86 - COIL BATTERY
87 - NORMALLY OPEN
87A - NORMALLY CLOSED

The front fog lamp relay is a conventional International Standards Organization (ISO) micro relay (Fig. 11). Relays conforming to the ISO specifications have common physical dimensions, current capacities, terminal patterns, and terminal functions. This relay is contained within a small, rectangular, molded plastic housing and is connected to all of the required inputs and outputs through five integral male spade-type terminals that extend from the relay base plate.

The front fog lamp relay is located in the Junction Block (JB) on the driver side outboard end bracket of the instrument panel. Refer to Junction Block in the wiring section of this service information for specific relay cavity assignment information. The front fog lamp relay cannot be adjusted or repaired and, if faulty or damaged, the unit must be replaced.

REAR

The rear fog lamp relay is a conventional International Standards Organization (ISO) micro relay (Fig. 12). Relays conforming to the ISO specifications have

FOG LAMP RELAY (Continued)

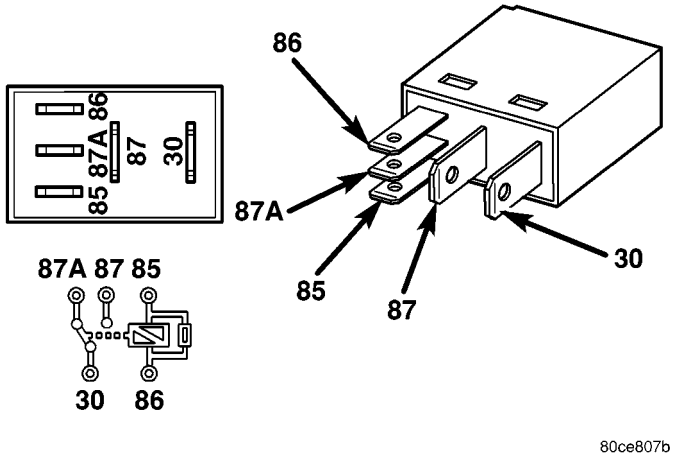

Fig. 12 ISO Micro Relay

30 - COMMON FEED
85 - COIL GROUND
86 - COIL BATTERY
87 - NORMALLY OPEN
87A - NORMALLY CLOSED

common physical dimensions, current capacities, terminal patterns, and terminal functions. This relay is contained within a small, rectangular, molded plastic housing and is connected to all of the required inputs and outputs through five integral male spade-type terminals that extend from the relay base plate.

The rear fog lamp relay is located in the Junction Block (JB) on the driver side outboard end bracket of the instrument panel. Refer to Junction Block in the wiring section of this service information for specific relay cavity assignment information. The rear fog lamp relay cannot be adjusted or repaired and, if faulty or damaged, the unit must be replaced.

OPERATION

FRONT

The front fog lamp relay is an electromechanical switch that uses a low current input from the Body Control Module (BCM) to control a high current output to the front fog lamps. Within the relay are an electromagnetic coil, a movable contact and two fixed contact points. A resistor is connected in parallel with the coil, and helps to dissipate voltage spikes and electromagnetic interference that can be generated as the field of the relay coil collapses.

The movable common supply contact point is held against the fixed normally closed contact point by spring pressure. When the relay coil is energized, an electromagnetic field is produced by the coil windings. This field draws the movable contact point away from the normally closed contact, and holds it against the normally open contact. When the relay coil is de-energized, spring pressure returns the movable contact back against the normally closed contact.

The inputs and outputs of the front fog lamp relay include:

- **Common Supply Terminal (30)** - The common feed terminal is connected to a fused B(+) circuit at all times.
- **Coil Ground Terminal (85)** - The coil ground terminal is connected to a control output of the premium Body Control Module (BCM) through a front fog lamp relay control circuit. The BCM controls front fog lamp operation by controlling a ground path through this circuit.
- **Coil Battery Terminal (86)** - The coil battery terminal is connected to a fused B(+) circuit at all times.
- **Normally Open Terminal (87)** - The normally open terminal is connected to the front fog lamps through a front fog lamp relay output circuit and provides battery voltage to the front fog lamps whenever the relay is energized.
- **Normally Closed Terminal (87A)** - The normally closed terminal is not connected in this application, but will have battery voltage present whenever the relay is de-energized.

The front fog lamp relay can be diagnosed using conventional diagnostic tools and methods. Refer to the appropriate wiring information.

REAR

The rear fog lamp relay is an electromechanical switch that uses a low current input from the Body Control Module (BCM) to control a high current output to the rear fog lamps. Within the relay are an electromagnetic coil, a movable contact and two fixed contact points. A resistor is connected in parallel with the coil, and helps to dissipate voltage spikes and electromagnetic interference that can be generated as the field of the relay coil collapses.

The movable common supply contact point is held against the fixed normally closed contact point by spring pressure. When the relay coil is energized, an electromagnetic field is produced by the coil windings. This field draws the movable contact point away from the normally closed contact, and holds it against the normally open contact. When the relay coil is de-energized, spring pressure returns the movable contact back against the normally closed contact.

The inputs and outputs of the rear fog lamp relay include:

- **Common Supply Terminal (30)** - The common feed terminal is connected to a fused B(+) circuit at all times.

FOG LAMP RELAY (Continued)

- **Coil Ground Terminal (85)** - The coil ground terminal is connected to a control output of the premium BCM through a rear fog lamp relay control circuit. The BCM controls rear fog lamp operation by controlling a ground path through this circuit.
- **Coil Battery Terminal (86)** - The coil battery terminal is connected to a fused B(+) circuit at all times.
- **Normally Open Terminal (87)** - The normally open terminal is connected to the rear fog lamps through a rear fog lamp relay output circuit and provides battery voltage to the rear fog lamps whenever the relay is energized.
- **Normally Closed Terminal (87A)** - The normally closed terminal is not connected in this application, but will have battery voltage present whenever the relay is de-energized.

The rear fog lamp relay can be diagnosed using conventional diagnostic tools and methods. Refer to the appropriate wiring information.

FRONT FOG LAMP

REMOVAL

BULB - GRILLE MOUNTED

CAUTION: Do not contaminate the bulb glass by touching it with your fingers or by allowing it to contact other oily surfaces. Shortened bulb life will result.

(1) Disconnect and isolate the battery negative cable.

(2) Remove the front fog lamp from the grille opening reinforcement, but do not disconnect the wire harness connector from the socket on the back of the lamp housing (Fig. 13). (Refer to 8 - ELECTRICAL/ LAMPS/LIGHTING - EXTERIOR/FRONT FOG LAMP - REMOVAL).

(3) Firmly grasp the socket on the back of the housing and rotate it counterclockwise about 30 degrees to unlock it.

(4) Pull the socket and bulb straight out from the keyed opening in the housing.

(5) Pull the base of the bulb straight out of the socket.

BULB - FASCIA MOUNTED

CAUTION: Do not contaminate the bulb glass by touching it with your fingers or by allowing it to contact other oily surfaces. Shortened bulb life will result.

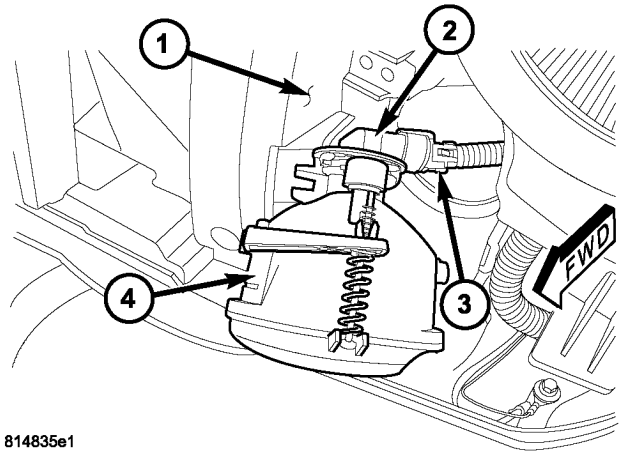

Fig. 13 Grille Mounted Fog Lamp Bulb

1 - REINFORCEMENT
2 - SOCKET
3 - CONNECTOR
4 - HOUSING

(1) Disconnect and isolate the battery negative cable.

(2) Remove the three screws that secure the front fog lamp bezel and lens to the back of the lamp housing (Fig. 14).

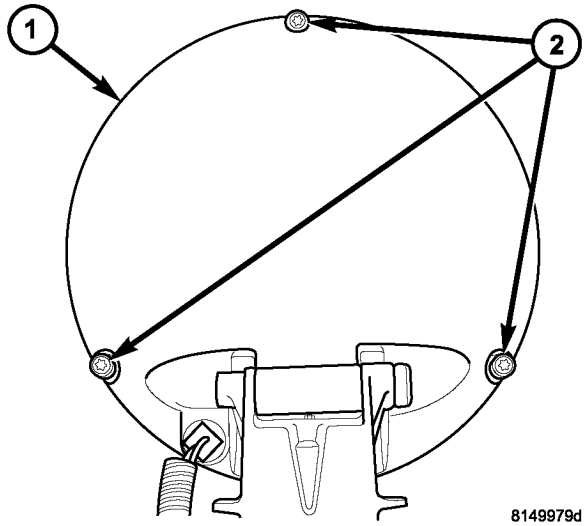

Fig. 14 Fog Lamp Lens/Bezel Screws

1 - HOUSING
2 - SCREW (3)

(3) Pull the bezel and lens away from the front of the lamp housing far enough to access and disconnect the fog lamp wiring connector from the bulb pigtail wire (Fig. 15).

FRONT FOG LAMP (Continued)

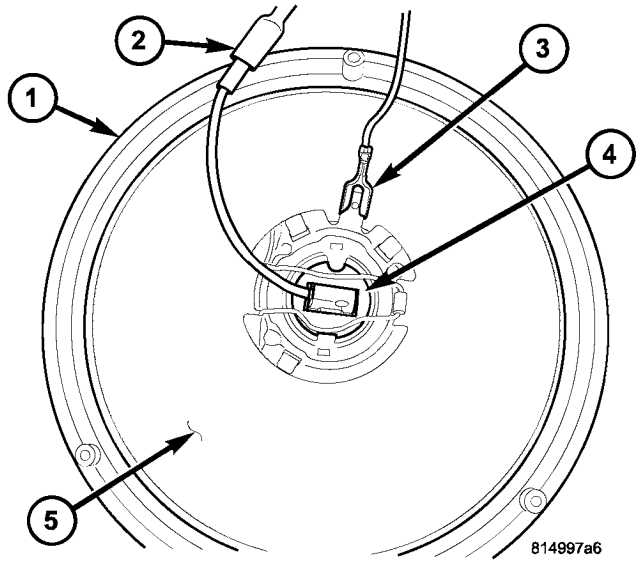

Fig. 15 Fog Lamp Bulb Connections

1 - BEZEL
2 - CONNECTOR
3 - GROUND TERMINAL
4 - BULB
5 - LENS REFLECTOR

(4) Pinch together the two hooked ends of the bulb retainer clip and disengage them from the slots in the mounting flange on the back of the lens reflector (Fig. 16).

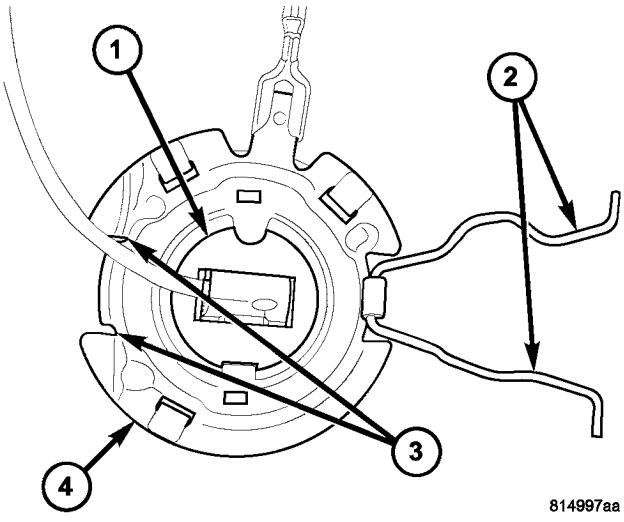

Fig. 16 Fog Lamp Bulb Retainer

1 - BULB FLANGE
2 - RETAINER CLIP
3 - SLOT (2)
4 - MOUNTING FLANGE

(5) Pivot the retainer clip up off of the bulb flange and out of the way.

(6) Pull the bulb straight out of the mounting flange on the back of the lens reflector.

LAMP - GRILLE MOUNTED

(1) Disconnect and isolate the battery negative cable.

(2) Remove the grille panel from the front of the grille opening reinforcement. (Refer to 23 - BODY/EXTERIOR/GRILLE - REMOVAL).

(3) Remove the screw that secures the fog lamp adjuster bracket to the grille opening reinforcement (Fig. 17).

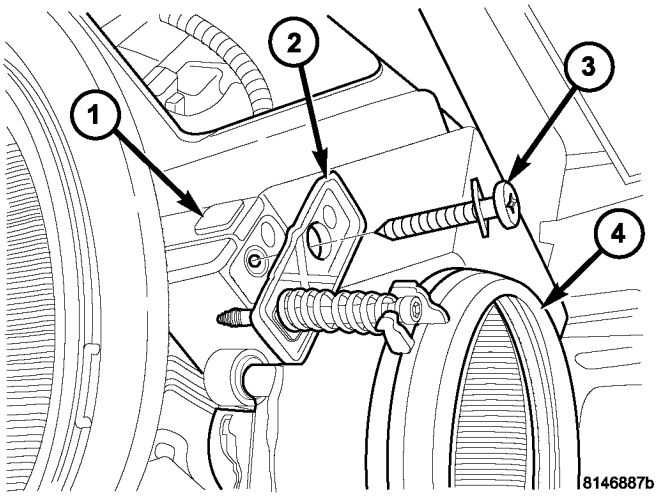

Fig. 17 Grille Mounted Fog Lamp

1 - REINFORCEMENT
2 - BRACKET
3 - SCREW
4 - LAMP

(4) Insert a trim stick or another suitable wide flat-bladed tool, between either side of the lamp and the side of the lamp seat in the grille opening reinforcement.

(5) Carefully pry the pivot pin on either side of the lamp out of its receptacle in the stanchion within the seat of the reinforcement.

(6) Pull the lamp out from the seat far enough to access and disconnect the wire harness connector from the bulb socket on the back of the lamp housing.

(7) Remove the lamp from the vehicle.

LAMP - FASCIA MOUNTED

(1) Disconnect and isolate the battery negative cable.

(2) Remove the grille panel from the front of the grille opening reinforcement. (Refer to 23 - BODY/EXTERIOR/GRILLE - REMOVAL).

FRONT FOG LAMP (Continued)

(3) Disconnect the front fog lamp pigtail wire from the connector on the grille opening reinforcement.

(4) Remove the screw from the mounting bracket that secures the fog lamp to the bracket on the top of the front bumper fascia (Fig. 18).

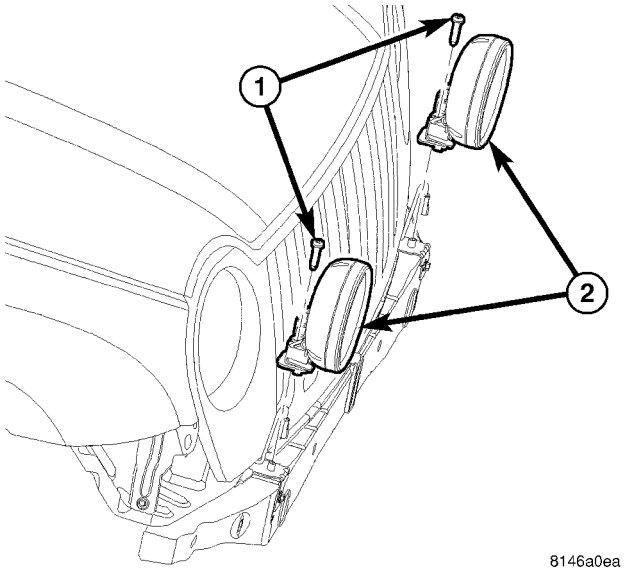

Fig. 18 Fog Lamp Remove/Install

1 - SCREW
2 - LAMP

(5) Remove the lamp from the top of the fascia.

INSTALLATION

BULB - GRILLE MOUNTED

CAUTION: Always use the correct bulb size and type for replacement. An incorrect bulb size or type may overheat and cause damage to the lamp, the socket and/or the lamp wiring.

CAUTION: Do not contaminate the bulb glass by touching it with your fingers or by allowing it to contact other oily surfaces. Shortened bulb life will result.

(1) Align the base of the bulb with the front fog lamp socket (Fig. 13).

(2) Push the bulb straight into the socket until the base is firmly seated.

(3) Align the socket and bulb with the keyed opening on the back of the front fog lamp housing.

(4) Insert the socket and bulb into the housing until the socket is firmly seated.

(5) Rotate the socket clockwise about 30 degrees to lock it into place. The socket connector receptacle should be pointed horizontally.

(6) Reinstall the fog lamp into the grille opening reinforcement. (Refer to 8 - ELECTRICAL/LAMPS/LIGHTING - EXTERIOR/FRONT FOG LAMP - INSTALLATION).

(7) Reconnect the battery negative cable.

BULB - FASCIA MOUNTED

CAUTION: Always use the correct bulb size and type for replacement. An incorrect bulb size or type may overheat and cause damage to the lamp, the socket and/or the lamp wiring.

CAUTION: Do not contaminate the bulb glass by touching it with your fingers or by allowing it to contact other oily surfaces. Shortened bulb life will result.

(1) Align the fog lamp bulb flange with the mounting flange on the back of the lens reflector (Fig. 16).

(2) Insert the bulb straight into the opening in the mounting flange until the bulb flange is firmly seated.

(3) Pivot the bulb retainer clip up and over the bulb flange.

(4) Pinch together the two hooked ends of the retainer clip and engage them into the slots in the mounting flange to lock the bulb into place.

(5) Reconnect the bulb pigtail wire to the fog lamp wiring connector (Fig. 15).

(6) Align and install the lens and bezel into the front fog lamp housing. Be certain not to pinch the lamp wiring between the housing and the bezel.

(7) Install and tighten the three screws that secure the bezel and lens to the back of the lamp housing (Fig. 14). Tighten the screws to 2 N·m (17 in. lbs.).

(8) Reconnect the battery negative cable.

LAMP - GRILLE MOUNTED

(1) Position the front fog lamp to the seat in the grille opening reinforcement (Fig. 17).

(2) Reconnect the wire harness connector to the bulb socket on the back of the lamp housing.

(3) Engage the pivot pin on either side of the lamp into its receptacle in the stanchion within the lamp seat of the grille opening reinforcement.

(4) Insert a trim stick or another suitable wide flat-bladed tool, between the opposite side of the lamp and the side of the lamp seat.

(5) Carefully pry between the side of the lamp and the seat far enough for the loose pivot pin to be snapped into place within its stanchion.

(6) Install and tighten the screw that secures the fog lamp adjuster bracket to the grille opening reinforcement. Tighten the screw to 3 N·m (30 in. lbs.).

FRONT FOG LAMP (Continued)

(7) Reinstall the grille panel onto the front of the grille opening reinforcement. (Refer to 23 - BODY/EXTERIOR/GRILLE - INSTALLATION).

(8) Reconnect the battery negative cable.

(9) Confirm proper front fog lamp alignment. (Refer to 8 - ELECTRICAL/LAMPS/LIGHTING - EXTERIOR/FRONT FOG LAMP UNIT - ADJUSTMENTS).

LAMP - FASCIA MOUNTED

(1) Position the front fog lamp to the bracket on the top of the front bumper fascia (Fig. 18).

(2) Install and tighten the screw into the mounting bracket that secures the lamp to the fascia. Tighten the screw to 20 N·m (15 ft. lbs.).

(3) Reconnect the lamp pigtail wire to the connector on the grille opening reinforcement.

(4) Reinstall the grille panel onto the front of the grille opening reinforcement. (Refer to 23 - BODY/EXTERIOR/GRILLE - INSTALLATION).

(5) Reconnect the battery negative cable.

(6) Confirm proper front fog lamp alignment. (Refer to 8 - ELECTRICAL/LAMPS/LIGHTING - EXTERIOR/FRONT FOG LAMP UNIT - ADJUSTMENTS).

ADJUSTMENTS

FRONT FOG LAMP UNIT

VEHICLE PREPARATION FOR FOG LAMP ALIGNMENT

(1) Repair or replace any faulty or damaged components that could hinder proper lamp alignment.

(2) Verify proper tire inflation.

(3) Clean the front fog lamp lenses.

(4) Verify that the cargo area is not heavily loaded.

(5) The fuel tank should be Full. Add 2.94 kilograms (6.5 pounds) of weight over the fuel tank for each estimated gallon of missing fuel.

FOG LAMP ALIGNMENT SCREEN PREPARATION

Prepare an alignment screen as illustrated.

(1) Position the vehicle on a level surface perpendicular to a flat wall 7.62 meters (25 feet) away from the front of the front fog lamp lens (Fig. 19). If necessary, tape a line on the floor 7.62 meters (25 feet) away from and parallel to the wall.

(2) Measure up on the wall 1.27 meters (5 feet) from the floor and tape a vertical line on the align-

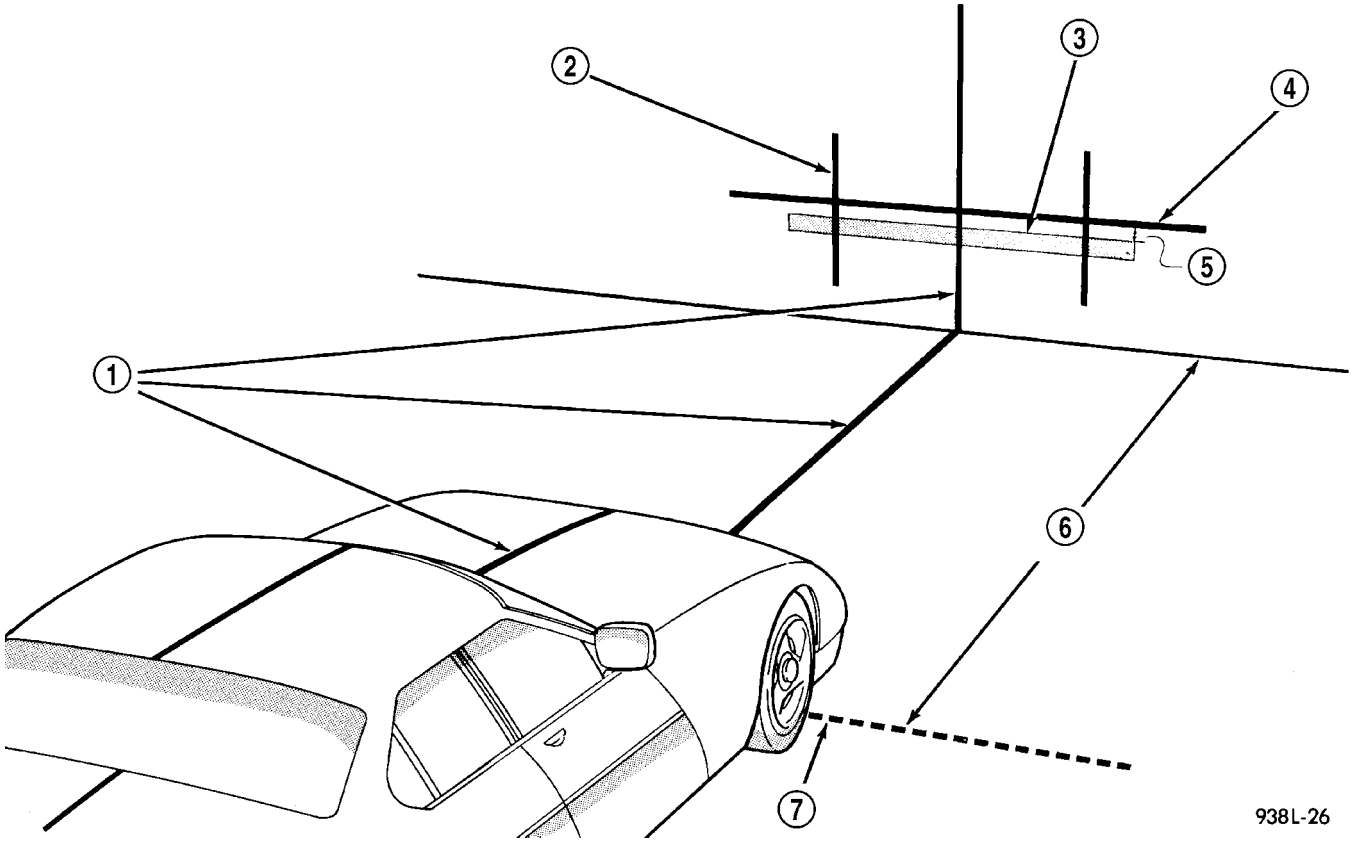

Fig. 19 Front Fog Lamp Alignment - Typical

1 - VEHICLE CENTERLINE
2 - CENTER OF VEHICLE TO CENTER OF FOG LAMP LENS
3 - HIGH-INTENSITY AREA
4 - FLOOR TO CENTER OF FOG LAMP LENS
5 - 100 MILLIMETERS (4 INCHES)
6 - 7.62 METERS (25 FEET)
7 - FRONT OF FOG LAMP

FRONT FOG LAMP (Continued)

ment screen at the centerline of the vehicle. Sight along the centerline of the vehicle (from the rear of the vehicle forward) to verify the accuracy of the centerline placement.

(3) Rock the vehicle from side-to-side three times to allow the suspension to stabilize, then jounce the front suspension three times by pushing downward on the front bumper and releasing. Measure the distance from the center of the front fog lamp lens to the floor. Transfer this measurement to the alignment screen and tape a horizontal line on the wall at this mark. This line will be used for up-and-down adjustment reference.

(4) Measure the distance from the centerline of the vehicle to the center of each front fog lamp being aligned. Transfer these measurements to the alignment screen and tape a vertical line this distance to each side of the vehicle centerline. These lines will be used for left/right reference.

FOG LAMP ADJUSTMENT

A properly aligned front fog lamp will project a pattern on the alignment screen 100 millimeters (4 inches) below the fog lamp centerline and straight ahead of the lamp.

NOTE: On vehicles with grille-mounted fog lamps the grille must be removed to access the front fog lamp adjusting screws. (Refer to 23 - BODY/EXTERIOR/GRILLE - REMOVAL).

(1) Turn the front fog lamp adjusting screws to adjust the beam height as required (Fig. 20) or (Fig. 21).

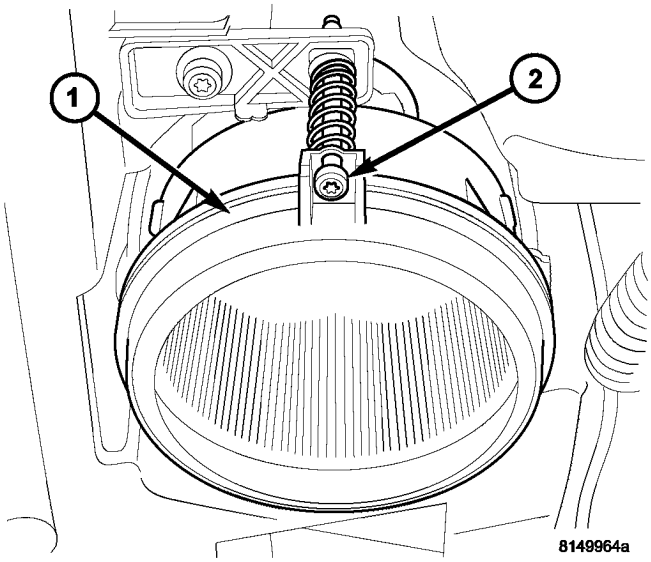

Fig. 20 Front Fog Lamp Adjusting Screw - Grille-Mounted

1 - FRONT FOG LAMP
2 - ADJUSTING SCREW

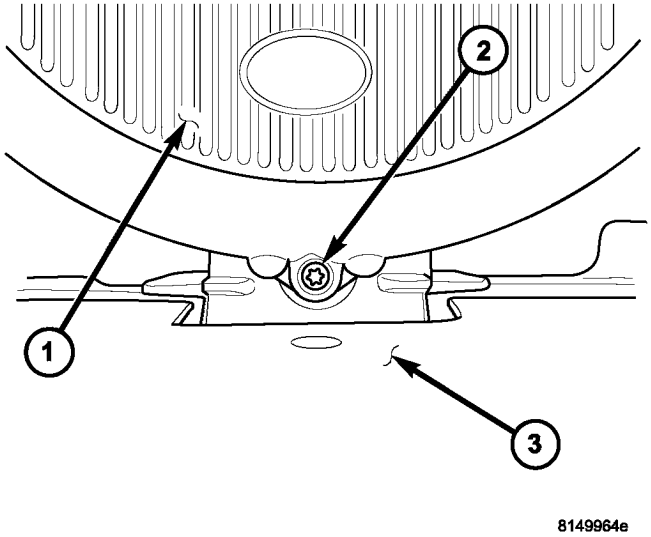

Fig. 21 Front Fog Lamp Adjusting Screw - Fascia-Mounted

1 - FRONT FOG LAMP
2 - ADJUSTING SCREW
3 - FRONT BUMPER FASCIA

FRONT POSITION LAMP

REMOVAL - BULB

NOTE: The front position lamps are integral to the headlamps on vehicles manufactured for certain markets where these lamps are required.

(1) Disconnect and isolate the battery negative cable.

(2) Remove the headlamp from the front grille opening reinforcement. (Refer to 8 - ELECTRICAL/LAMPS/LIGHTING - EXTERIOR/HEADLAMP UNIT - REMOVAL).

(3) Firmly grasp the front position lamp socket near the bottom of the headlamp unit housing and rotate it counterclockwise about 30 degrees to unlock it (Fig. 22).

(4) Pull the socket and bulb straight out from the keyed opening in the housing.

(5) Pull the base of the bulb straight out of the socket.

FRONT POSITION LAMP (Continued)

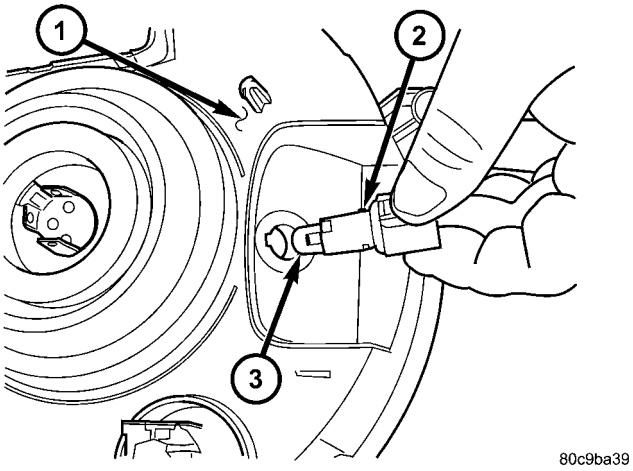

Fig. 22 Front Position Lamp Bulb Remove/Install

1 - HEADLAMP HOUSING
2 - SOCKET
3 - BULB

INSTALLATION - BULB

CAUTION: Always use the correct bulb size and type for replacement. An incorrect bulb size or type may overheat and cause damage to the lamp, the socket and/or the lamp wiring.

NOTE: The front position lamps are integral to the headlamp units on vehicles manufactured for certain markets where these lamps are required.

(1) Align the base of the bulb with the position lamp bulb socket.

(2) Push the bulb straight into the socket until the base is firmly seated.

(3) Align the socket and bulb with the keyed opening on the bottom of the headlamp housing (Fig. 22).

(4) Insert the socket and bulb into the housing until the socket is firmly seated.

(5) Rotate the socket clockwise about 30 degrees to lock it into place.

(6) Reinstall the headlamp unit onto the grille opening reinforcement. (Refer to 8 - ELECTRICAL/LAMPS/LIGHTING - EXTERIOR/HEADLAMP UNIT - INSTALLATION).

(7) Reconnect the battery negative cable.

(8) Confirm proper headlamp unit alignment. (Refer to 8 - ELECTRICAL/LAMPS/LIGHTING - EXTERIOR/HEADLAMP UNIT - ADJUSTMENTS).

HAZARD SWITCH

DESCRIPTION

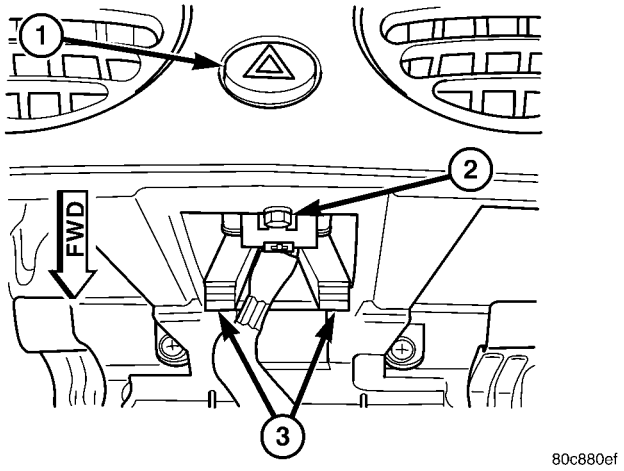

Fig. 23 Hazard Switch

1 - HAZARD SWITCH BUTTON
2 - SCREW (1)
3 - MOUNTING BRACKET TABS

The hazard switch is integral to the hazard switch module, which is secured near the center of instrument panel just above the radio (Fig. 23). Only the hazard switch button is visible through a dedicated, beveled, circular opening in the instrument panel between the two center panel outlets of the heat and air conditioning system. A red, stencil-like International Control and Display Symbol icon for “Hazard Warning” identifies the hazard switch button. The remainder of the hazard switch module is concealed behind the instrument panel.

All of the circuitry and components of the hazard switch module are contained within a molded black plastic housing. On the opposite end of the housing from the switch button is an integral connector receptacle and a stamped steel mounting bracket. The mounting bracket includes two latch feature tabs that extend downward to support the back of the housing. These tabs engage the edge of the mounting hole provided for the switch in the instrument panel above the radio opening. The switch module housing also has an integral short, dowel-like alignment pin on each side just behind the switch button that is engaged in integral ramp formations in the instrument panel two align and support the face of the module. Finally, a single screw through the top of the radio opening securely fastens the switch module to the instrument panel.

The switch module is connected to the vehicle electrical system through a single dedicated take out and connector of the instrument panel wire harness. Within the hazard switch module is the hazard

HAZARD SWITCH (Continued)

switch circuitry, which includes a circuit board with both the hazard switch and the electronic combination flasher circuitry. The circuitry of the combination flasher performs both the hazard flasher and the turn signal flasher functions.

The hazard switch module cannot be adjusted or repaired and, if faulty or damaged, it must be replaced as a unit.

OPERATION

The hazard switch button is slightly recessed in the instrument panel when the switch is in the Off position, and latches at a position that is flush with the outer surface of the instrument panel when in the On position. The hazard switch module circuit board includes miniature relays that produce audible clicking to emulate the sound of a conventional flasher whenever the turn signals or the hazard warning system are activated.

The hazard switch module receives battery voltage on a fused B(+) circuit from a fuse in the Junction Block (JB) at all times for operation of the hazard warning, and on a fused ignition switch output (run) circuit from another fuse in the JB whenever the ignition switch is in the On position for operation of the turn signals. The module receives a path to ground through a splice block secured by a nut to a ground stud on the driver side instrument panel end bracket near the JB.

Inputs to and outputs from the hazard switch module include:

- **Panel Lamps Dimmer Input** - A non-serviceable incandescent bulb soldered onto the hazard switch module provides illumination of the switch button when the exterior lighting is turned On through the fused panel lamps dimmer switch signal circuit. This bulb flashes on and off at full intensity whenever the hazard switch button is activated, regardless of the status of the exterior lighting.
- **Hazard Switch Input** - The combination flasher receives an internal ground input from the hazard switch to request hazard flasher operation.
- **Multi-Function Switch Input** - The combination flasher receives separate ground inputs from the multi-function switch on right and left turn switch sense circuits to request turn signal flasher operation.
- **Body Control Module Input** - The Body Control Module (BCM) can request hazard flasher operation by providing a ground path to the combination flasher through a hazard lamp control circuit.
- **Turn Signal Output** - The combination flasher responds to the flasher inputs by energizing and de-energizing two miniature relays on the module circuit board. These relays control the switch output through the right and left turn signal circuits. One relay controls the right lamps, while the other controls the left.

Because of active electronic elements within the hazard switch module, it cannot be tested using conventional diagnostic tools or procedures. If a problem is noted with turn signal or hazard warning system operation, test and confirm the turn signal and hazard warning lighting circuits are in good condition before replacing the hazard switch module.

REMOVAL

WARNING: To avoid personal injury or death, on vehicles equipped with airbags, disable the supplemental restraint system before attempting any steering wheel, steering column, airbag, occupant classification system, seat belt tensioner, impact sensor, or instrument panel component diagnosis or service. Disconnect and isolate the battery negative (ground) cable, then wait two minutes for the system capacitor to discharge before performing further diagnosis or service. This is the only sure way to disable the supplemental restraint system. Failure to take the proper precautions could result in accidental airbag deployment.

(1) Disconnect and isolate the battery negative cable.

(2) Remove the radio from the instrument panel. (Refer to 8 - ELECTRICAL/AUDIO/RADIO - REMOVAL).

(3) Remove the screw at the top of the instrument panel radio opening that secures the hazard switch to the instrument panel (Fig. 24).

(4) Reach through the radio opening to access the two latch tabs of the stamped metal hazard switch mounting bracket.

(5) Pull rearward and downward on the latch tabs of the switch mounting bracket far enough to disengage them from the instrument panel trim.

(6) Push the hazard switch button through the button opening far enough to disengage the alignment pins on each side of the switch housing from the saddle-like ramp formations on the back of the instrument panel trim.

(7) Pull the switch down into the radio opening far enough to access and disconnect the instrument panel wire harness connector from the back of the switch.

(8) Remove the hazard switch through the instrument panel radio opening.

HAZARD SWITCH (Continued)

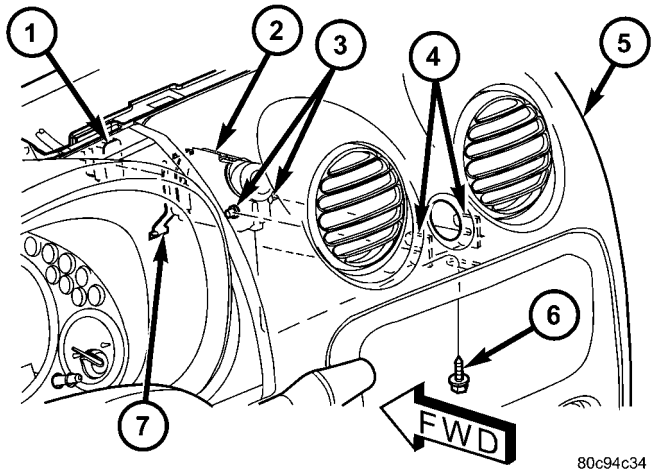

Fig. 24 Hazard Switch Remove/Install

1 - WIRE HARNESS CONNECTOR
2 - HAZARD SWITCH
3 - ALIGNMENT PIN (2)
4 - STANCHION (2)
5 - INSTRUMENT PANEL
6 - SCREW (1)
7 - MOUNTING BRACKET LATCH TAB (2)

INSTALLATION

WARNING: To avoid personal injury or death, on vehicles equipped with airbags, disable the supplemental restraint system before attempting any steering wheel, steering column, airbag, occupant classification system, seat belt tensioner, impact sensor, or instrument panel component diagnosis or service. Disconnect and isolate the battery negative (ground) cable, then wait two minutes for the system capacitor to discharge before performing further diagnosis or service. This is the only sure way to disable the supplemental restraint system. Failure to take the proper precautions could result in accidental airbag deployment.

(1) Position the hazard switch module into the instrument panel radio opening.

(2) Reconnect the instrument panel wire harness connector to the back of the switch housing.

(3) Reach through the instrument panel radio opening to position the hazard switch for installation.

(4) Guide the hazard switch button through the button opening of the instrument panel, which will engage the alignment pins on each side of the switch housing into the saddle-like ramp formations on the back of the instrument panel trim.

(5) Press upward on the back of the hazard switch until the latch tabs of the mounting bracket are both engaged with the instrument panel trim (Fig. 24).

(6) Install and tighten the screw that secures the switch to the top of the instrument panel radio opening. Tighten the screw to 2 N·m (17 in. lbs.).

(7) Reinstall the radio into the instrument panel. (Refer to 8 - ELECTRICAL/AUDIO/RADIO - INSTALLATION).

(8) Reconnect the battery negative cable.

HEADLAMP HIGH BEAM RELAY

DESCRIPTION

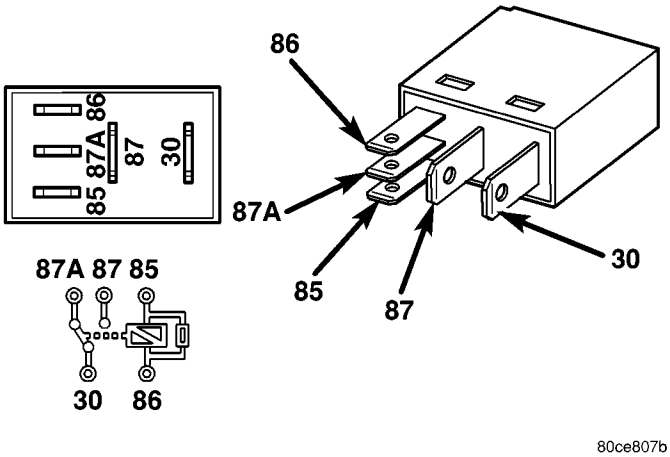

Fig. 25 ISO Micro Relay

30 - COMMON FEED
85 - COIL GROUND
86 - COIL BATTERY
87 - NORMALLY OPEN
87A - NORMALLY CLOSED

The headlamp high beam relay is a conventional International Standards Organization (ISO) micro relay (Fig. 25). Relays conforming to the ISO specifications have common physical dimensions, current capacities, terminal patterns, and terminal functions. This relay is contained within a small, rectangular, molded plastic housing and is connected to all of the required inputs and outputs through five integral male spade-type terminals that extend from the relay base plate.

The headlamp high beam relay is located in the Junction Block (JB). This relay is omitted from vehicles manufactured for sale in Canada, which have a Daytime Running Lamp (DRL) solid state relay installed in the JB that also performs the high beam relay function.

The headlamp high beam relay cannot be adjusted or repaired and, if faulty or damaged, it must be replaced with a new unit.

OPERATION

The headlamp high beam relay is an electromechanical switch that uses a low current input from

HEADLAMP HIGH BEAM RELAY (Continued)

the Body Control Module (BCM) to control a high current output to the headlamp high beam filaments. Within the relay are an electromagnetic coil, a movable contact and two fixed contact points. A resistor is connected in parallel with the coil, and helps to dissipate voltage spikes and electromagnetic interference that can be generated as the field of the relay coil collapses.

The movable common supply contact point is held against the fixed normally closed contact point by spring pressure. When the relay coil is energized, an electromagnetic field is produced by the coil windings. This field draws the movable contact point away from the normally closed contact, and holds it against the normally open contact. When the relay coil is de-energized, spring pressure returns the movable contact back against the normally closed contact.

The inputs and outputs of the headlamp high beam relay include:

- **Common Supply Terminal (30)** - The common feed terminal is connected to a fused B(+) circuit at all times.
- **Coil Ground Terminal (85)** - The common feed terminal is connected to a fused B(+) circuit at all times.
- **Coil Battery Terminal (86)** - The coil battery terminal is connected to a control output of the Body Control Module (BCM) and to the momentary optical horn (flash-to-pass) output of the multi-function switch through a high beam relay control circuit. The BCM and/or the multi-function switch controls headlamp high beam operation by controlling a ground path through this circuit.
- **Normally Open Terminal (87)** - The normally open terminal is connected to the headlamp high beam filaments through the high beam relay output circuit and provides battery voltage to the headlamp high beams whenever the relay is energized.
- **Normally Closed Terminal (87A)** - The normally closed terminal is not connected in this application, but will have battery voltage present whenever the relay is de-energized.

The headlamp high beam relay can be diagnosed using conventional diagnostic tools and methods. Refer to the appropriate wiring information.

REMOVAL

WARNING: To avoid personal injury or death, on vehicles equipped with airbags, disable the supplemental restraint system before attempting any steering wheel, steering column, airbag, occupant classification system, seat belt tensioner, impact sensor, or instrument panel component diagnosis or service. Disconnect and isolate the battery negative (ground) cable, then wait two minutes for the system capacitor to discharge before performing further diagnosis or service. This is the only sure way to disable the supplemental restraint system. Failure to take the proper precautions could result in accidental airbag deployment.

NOTE: The headlamp high beam relay is installed in the Junction Block (JB) on the driver side outboard end of the instrument panel. Vehicles equipped with a Daytime Running Lamps (DRL) relay MUST NOT have a headlamp high beam relay installed in the JB.

(1) Disconnect and isolate the battery negative cable.

(2) Remove the trim from the driver side end of the instrument panel. (Refer to 23 - BODY/INSTRUMENT PANEL/INSTRUMENT PANEL END CAP - REMOVAL).

(3) Remove the high beam relay by grasping it firmly and pulling it straight out from the receptacle in the JB (Fig. 26).

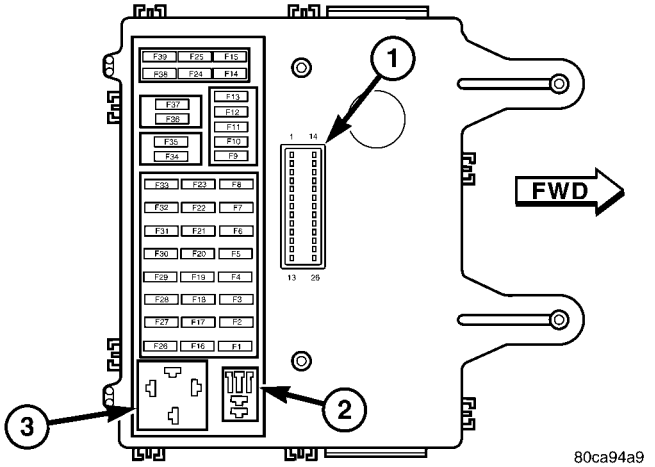

Fig. 26 Junction Block - Outboard Side (RHD Shown - Rotate 180° for LHD)

1 - JB/BCM CONNECTOR
2 - HIGH BEAM RELAY (RECEPTACLE MUST BE EMPTY WITH DRL RELAY INSTALLED)
3 - DRL RELAY (RECEPTACLE MUST BE EMPTY WITH HIGH BEAM RELAY INSTALLED)

HEADLAMP HIGH BEAM RELAY (Continued)

INSTALLATION

WARNING: To avoid personal injury or death, on vehicles equipped with airbags, disable the supplemental restraint system before attempting any steering wheel, steering column, airbag, occupant classification system, seat belt tensioner, impact sensor, or instrument panel component diagnosis or service. Disconnect and isolate the battery negative (ground) cable, then wait two minutes for the system capacitor to discharge before performing further diagnosis or service. This is the only sure way to disable the supplemental restraint system. Failure to take the proper precautions could result in accidental airbag deployment.

NOTE: The headlamp high beam relay is installed in the Junction Block (JB) on the driver side outboard end of the instrument panel. Vehicles equipped with a Daytime Running Lamps (DRL) relay MUST NOT have a headlamp high beam relay installed in the JB.

(1) Position the headlamp high beam relay to the proper receptacle in the JB (Fig. 26).

(2) Align the high beam relay terminals with the cavities in the JB receptacle.

(3) Push firmly and evenly on the top of the high beam relay until the relay base is fully seated in the JB receptacle.

(4) Reinstall the trim onto the driver side outboard end of the instrument panel. (Refer to 23 - BODY/INSTRUMENT PANEL/INSTRUMENT PANEL END CAP - INSTALLATION).

(5) Reconnect the battery negative cable.

HEADLAMP LEVELING MOTOR

DESCRIPTION

The headlamp leveling motor is located on the rear inboard side of each headlamp unit on models equipped with the headlamp leveling system, which is available only in certain markets where required (Fig. 27). The motor is encased within a molded plastic housing and is secured by an integral wedge-type mounting boss to a keyed flange on the back of the headlamp unit housing. A rubber seal around the circumference of the mounting boss seals the motor to the headlamp.

The outside of the motor housing features an integral molded connector on its rearward surface, a hex-headed adjusting screw extends from the top of the housing, and a plastic pushrod with a ball formation on its free end extends from the motor mounting boss. Within the motor housing is a 12-volt Direct Current (DC) servo motor, an electronic controller board that includes the motor logic circuits, and an integral screw-drive transmission. The headlamp leveling motor is connected to the vehicle electrical system through a dedicated take out and connector of the front fascia wire harness.

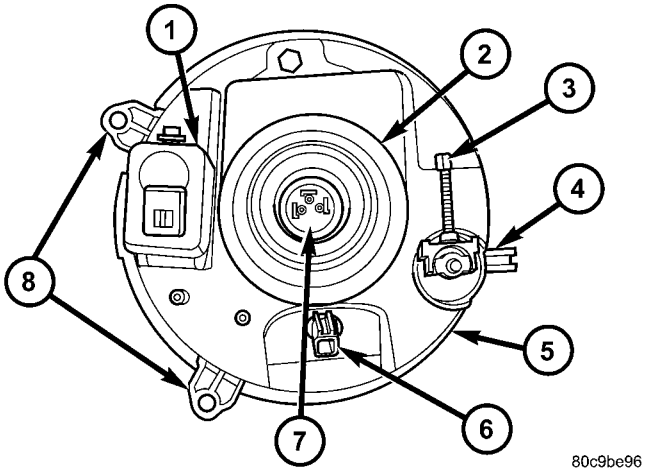

Fig. 27 Headlamp Unit - With Leveling

1 - LEVELING MOTOR (IF EQUIPPED)
2 - BOOT SEAL
3 - ADJUSTING SCREW
4 - LOCATOR TAB
5 - HOUSING
6 - FRONT POSITION LAMP SOCKET & BULB
7 - HEADLAMP BULB
8 - MOUNTING TAB (2)

The headlamp leveling motor cannot be repaired and, if faulty or damaged, the unit must be replaced.

OPERATION

The controller board and logic circuitry of the headlamp leveling motor control motor operation based upon a voltage signal input received from the resistor multiplexed headlamp leveling switch on the instrument panel. When the motor is energized it will extend or retract the motor pushrod through the integral screw-drive transmission. The ball on the end of the pushrod is snapped into a socket on the back of the reflector within the headlamp unit housing, which will cause the reflector to move as the pushrod is extended or retracted, changing the angle at which the light is projected from the headlamps.

The headlamp leveling motors and switch have a path to ground at all times. The headlamp leveling components operate on battery voltage received through the fused park lamp relay output circuit so that the system will only operate when the exterior lighting is turned On.

Because of active electronic elements within the headlamp leveling motor, it cannot be tested using conventional diagnostic tools and procedures. If the headlamp leveling system is believed to be faulty, the

HEADLAMP LEVELING MOTOR (Continued)

headlamp leveling circuits and the leveling switch must be tested before considering motor replacement.

REMOVAL

NOTE: Headlamp leveling motors are integral to the headlamp unit only on vehicles manufactured for certain markets where headlamp leveling is required.

(1) Disconnect and isolate the battery negative cable.

(2) Remove the headlamp bulb from the headlamp housing. (Refer to 8 - ELECTRICAL/LAMPS/LIGHTING - EXTERIOR/HEADLAMP BULB - REMOVAL).

(3) Rotate the headlamp leveling motor on the back of the headlamp housing counterclockwise about 30 degrees to unlock it (Fig. 28).

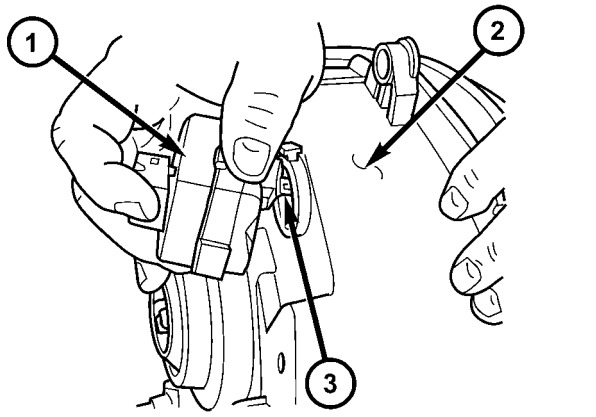

Fig. 28 Headlamp Leveling Motor Remove/Install

1 - LEVELING MOTOR
2 - HEADLAMP HOUSING
3 - PUSHROD

(4) Firmly grasp the motor with one hand while stabilizing the headlamp unit housing with the other hand.

(5) Firmly, steadily, and forcefully pull the headlamp leveling motor straight away from the back of the headlamp housing to unsnap the ball on the end of the motor pushrod from the socket on the headlamp reflector (Fig. 29).

(6) Remove the headlamp leveling motor and pushrod from the back of the headlamp unit housing.

INSTALLATION

NOTE: Headlamp leveling motors are integral to the headlamp unit only on vehicles manufactured for certain markets where headlamp leveling is required.

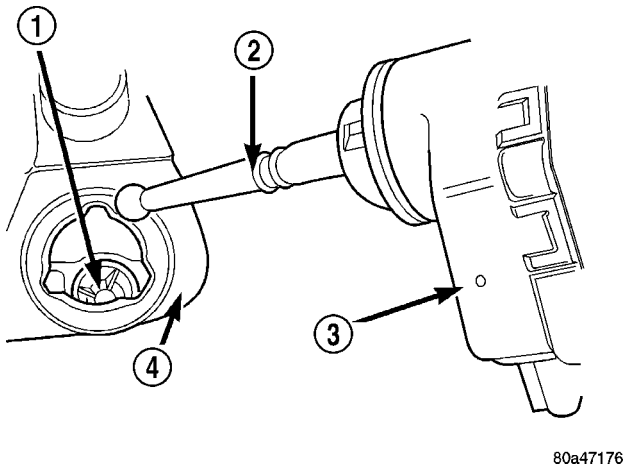

Fig. 29 Leveling Motor Pushrod - Typical

1 - REFLECTOR PUSHROD SOCKET
2 - PUSHROD
3 - LEVELING MOTOR
4 - HEADLAMP HOUSING

(1) Position the headlamp leveling motor and pushrod to the keyed mounting hole on the back of the headlamp unit housing.

(2) Insert two fingers through the bulb mounting hole in the center of the headlamp reflector and pull the reflector upwards toward the headlamp leveling motor.

(3) Align the ball on the end of the leveling motor pushrod with the socket on the headlamp reflector (Fig. 29).

(4) While continuing to pull the reflector toward the motor, firmly, steadily and forcefully push the headlamp leveling motor straight into the back of the headlamp housing far enough to snap the ball on the end of the motor pushrod into the socket on the headlamp reflector.

(5) After the pushrod is engaged to the reflector, remove your fingers from the headlamp reflector and thoroughly clean any fingerprints from the reflector.

(6) Push the mounting flange of the headlamp leveling motor into the keyed mounting hole on the back of the headlamp unit housing until the motor is firmly seated (Fig. 28).

(7) Rotate the headlamp leveling motor clockwise about 30 degrees to lock it into place.

(8) Reinstall the headlamp bulb into the headlamp housing. (Refer to 8 - ELECTRICAL/LAMPS/LIGHTING - EXTERIOR/HEADLAMP BULB - INSTALLATION).

(9) Reconnect the battery negative cable.

HEADLAMP LEVELING SWITCH

DESCRIPTION

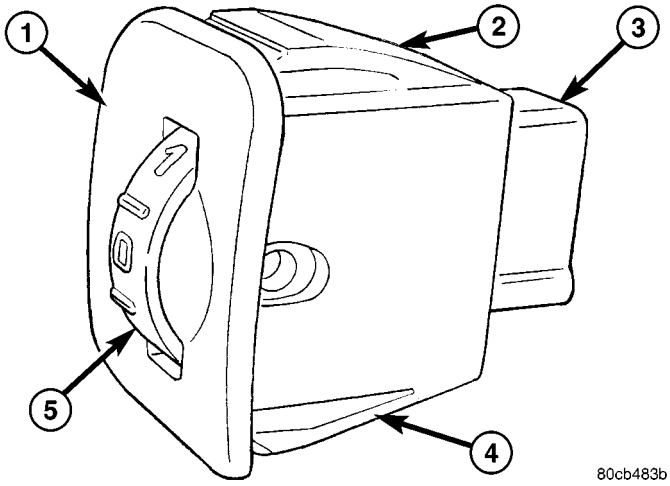

Fig. 30 Headlamp Leveling Switch

1 - SWITCH
2 - UPPER LATCH FEATURE (1)
3 - CONNECTOR RECEPTACLE
4 - LOWER LATCH FEATURE (2)
5 - THUMBWHEEL

The headlamp leveling switch (Fig. 30) is used only on vehicles manufactured for certain markets where the headlamp leveling system is required. The headlamp leveling switch is mounted in the driver side inboard trim bezel on the instrument panel. Only the switch bezel and thumbwheel are visible on the outer surface of the instrument panel trim bezel. The black plastic switch thumbwheel is marked with white numbers “0,” “1,” “2,” and “3,” each of which indicates one of the four switch detent positions. Each higher number represents a lower aiming position of the headlamp beam relative to the road surface.

The black, molded plastic switch housing encloses the switch thumbwheel mechanism and the leveling switch circuitry including the switch contacts and a series resistor configuration. A connector receptacle is integral to the back of the switch housing, while a single integral latch feature on the top of the housing and two latch features on the bottom of the housing secure the switch in the instrument panel trim bezel. The switch is connected to the vehicle electrical system through a dedicated take out and connector of the instrument panel wire harness.

The headlamp leveling switch cannot be adjusted or repaired and, if faulty or damaged, the unit must be replaced.

OPERATION

The headlamp leveling switch receives battery voltage on a fused park lamp relay output circuit from a fuse in the Junction Block (JB) whenever the park lamps relay is energized (the park lamps are turned On). The switch receives a path to ground through a splice block in the instrument panel wire harness secured by a nut to a ground stud on the driver side instrument panel end bracket near the JB.

The only output from the switch is a voltage signal that it provides to the headlamp leveling motors on a headlamp adjust signal circuit. Each switch position selects a different tap on a series resistor within the switch to provide a different voltage signal to the leveling motors. The higher the switch position number, the higher the output voltage level.

The headlamp leveling switch can be tested using conventional diagnostic tools and methods.

DIAGNOSIS AND TESTING

HEADLAMP LEVELING SWITCH

WARNING: To avoid personal injury or death, on vehicles equipped with airbags, disable the supplemental restraint system before attempting any steering wheel, steering column, airbag, occupant classification system, seat belt tensioner, impact sensor, or instrument panel component diagnosis or service. Disconnect and isolate the battery negative (ground) cable, then wait two minutes for the system capacitor to discharge before performing further diagnosis or service. This is the only sure way to disable the supplemental restraint system. Failure to take the proper precautions could result in accidental airbag deployment.

(1) Disconnect and isolate the battery negative cable.

(2) Disconnect the instrument panel wire harness connector from the headlamp leveling switch.

(3) Using an ohmmeter, perform the resistance tests at the terminal pins in the headlamp leveling switch connector receptacle (Fig. 31) as shown in the Headlamp Leveling Switch Tests table.

HEADLAMP LEVELING SWITCH TESTS	
SWITCH POSITION	RESISTANCE (OHMS) BETWEEN PINS 1 & 3
0	0.5 ± 0.5
1	301 ± 1
2	595 ± 1
3	739 ± 1

HEADLAMP LEVELING SWITCH (Continued)

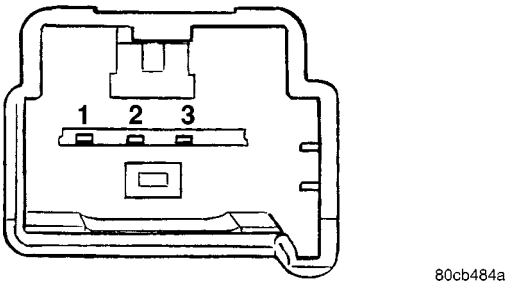

Fig. 31 Headlamp Leveling Switch Connector Receptacle

(4) If the switch fails any of the resistance tests, replace the faulty headlamp leveling switch as required.

REMOVAL

WARNING: To avoid personal injury or death, on vehicles equipped with airbags, disable the supplemental restraint system before attempting any steering wheel, steering column, airbag, occupant classification system, seat belt tensioner, impact sensor, or instrument panel component diagnosis or service. Disconnect and isolate the battery negative (ground) cable, then wait two minutes for the system capacitor to discharge before performing further diagnosis or service. This is the only sure way to disable the supplemental restraint system. Failure to take the proper precautions could result in accidental airbag deployment.

NOTE: A headlamp leveling switch is used only on vehicles manufactured for certain markets where headlamp leveling is required.

(1) Disconnect and isolate the battery negative cable.

(2) Remove the driver side inboard bezel from the instrument panel. (Refer to 23 - BODY/INSTRUMENT PANEL/INSTRUMENT PANEL DRIVER SIDE BEZEL - REMOVAL).

(3) Disconnect the instrument panel wire harness connector from the headlamp leveling switch connector receptacle (Fig. 32).

(4) From the back of the trim bezel, depress the two lower latch features on the switch housing and rock the bottom of the switch out through the face of the bezel.

(5) From the back of the trim bezel, depress the upper latch feature on the switch housing and push the switch out through the face of the bezel.

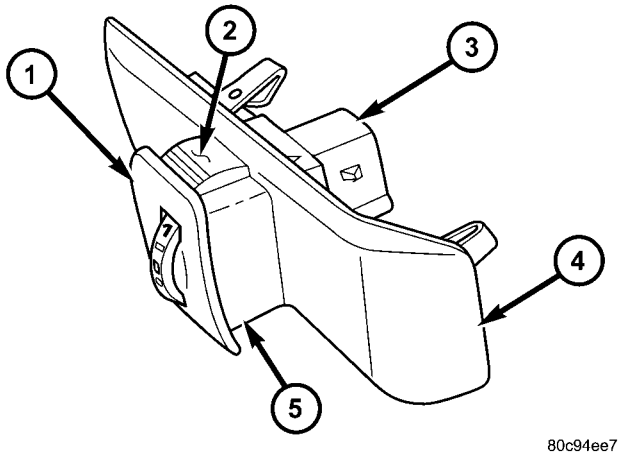

Fig. 32 Headlamp Leveling Switch Remove/Install

1 - HEADLAMP LEVELING SWITCH
2 - UPPER LATCH TAB
3 - RECEPTACLE
4 - DRIVER SIDE INBOARD BEZEL
5 - LOWER LATCH TAB (2)

INSTALLATION

WARNING: To avoid personal injury or death, on vehicles equipped with airbags, disable the supplemental restraint system before attempting any steering wheel, steering column, airbag, occupant classification system, seat belt tensioner, impact sensor, or instrument panel component diagnosis or service. Disconnect and isolate the battery negative (ground) cable, then wait two minutes for the system capacitor to discharge before performing further diagnosis or service. This is the only sure way to disable the supplemental restraint system. Failure to take the proper precautions could result in accidental airbag deployment.

NOTE: A headlamp leveling switch is used only on vehicles manufactured for certain markets where headlamp leveling is required.

(1) From the face of the driver side inboard bezel, align the headlamp leveling switch housing to the mounting hole in the bezel (Fig. 32).

(2) Push the switch into the mounting hole until it is fully seated and each of the latch features is fully engaged.

(3) Position the switch and bezel unit to the instrument panel.

(4) Reconnect the instrument panel wire harness connector to the switch connector receptacle.

(5) Reinstall the trim bezel and switch unit onto the instrument panel. (Refer to 23 - BODY/INSTRUMENT PANEL/INSTRUMENT PANEL DRIVER SIDE BEZEL - INSTALLATION).

(6) Reconnect the battery negative cable.

HEADLAMP LOW BEAM RELAY

DESCRIPTION

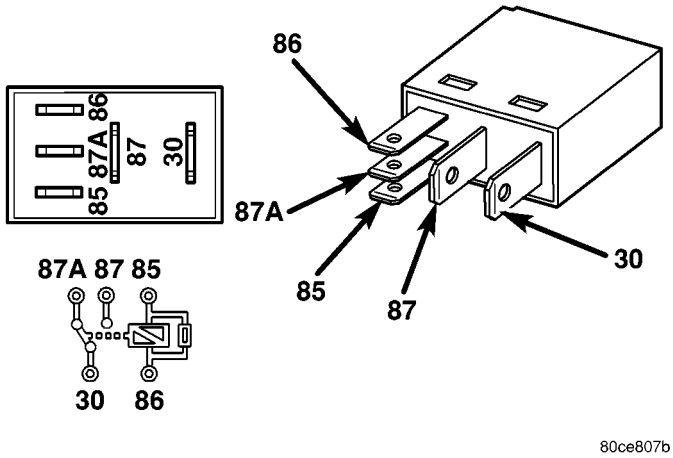

Fig. 33 ISO Micro Relay

30 - COMMON FEED
85 - COIL GROUND
86 - COIL BATTERY
87 - NORMALLY OPEN
87A - NORMALLY CLOSED

The headlamp low beam relay is a conventional International Standards Organization (ISO) micro relay (Fig. 33). Relays conforming to the ISO specifications have common physical dimensions, current capacities, terminal patterns, and terminal functions. This relay is contained within a small, rectangular, molded plastic housing and is connected to all of the required inputs and outputs through five integral male spade-type terminals that extend from the relay base plate.

The headlamp low beam relay is located in the Junction Block (JB) on the driver side instrument panel end bracket. The headlamp low beam relay cannot be adjusted or repaired and, if faulty or damaged, it must be replaced with a new unit.

OPERATION

The headlamp low beam relay is an electromechanical switch that uses a low current input from the Body Control Module (BCM) to control a high current output to the headlamp low beam filaments. Within the relay are an electromagnetic coil, a movable contact and two fixed contact points. A resistor is connected in parallel with the coil, and helps to dissipate voltage spikes and electromagnetic interference that can be generated as the field of the relay coil collapses.

The movable common supply contact point is held against the fixed normally closed contact point by spring pressure. When the relay coil is energized, an electromagnetic field is produced by the coil windings. This field draws the movable contact point away from the normally closed contact, and holds it against the normally open contact. When the relay coil is de-energized, spring pressure returns the movable contact back against the normally closed contact.

The inputs and outputs of the headlamp low beam relay include:

- **Common Supply Terminal (30)** - The common feed terminal is connected to a fused B(+) circuit at all times.
- **Coil Ground Terminal (85)** - The common feed terminal is connected to a fused B(+) circuit at all times.
- **Coil Battery Terminal (86)** - The coil battery terminal is connected to a control output of the Body Control Module (BCM) through a low beam relay control circuit. The BCM controls headlamp low beam operation by controlling a ground path through this circuit.
- **Normally Open Terminal (87)** - The normally open terminal is connected to the headlamp low beam filaments through the low beam relay output circuit and provides battery voltage to the headlamp low beams whenever the relay is energized.
- **Normally Closed Terminal (87A)** - The normally closed terminal is not connected in this application, but will have battery voltage present whenever the relay is de-energized.

The headlamp low beam relay can be diagnosed using conventional diagnostic tools and methods. Refer to the appropriate wiring information.

HEADLAMP UNIT

REMOVAL

LAMP

(1) Disconnect and isolate the battery negative cable.

(2) Remove the grille panel from the grille opening reinforcement. (Refer to 23 - BODY/EXTERIOR/GRILLE - REMOVAL).

(3) Remove the two screws that secure the mounting tabs on the inboard side of the headlamp unit housing to the grille opening reinforcement (Fig. 34).

(4) Pull the inboard side of the headlamp unit away from the grille opening reinforcement far enough to disengage the locator tab on the outboard side of the unit (Fig. 35) or (Fig. 36) from the engagement slot in the outboard edge of the reinforcement.

(5) Pull the headlamp unit away from the grille opening reinforcement far enough to disconnect the wire harness connectors from the headlamp bulb

HEADLAMP UNIT (Continued)

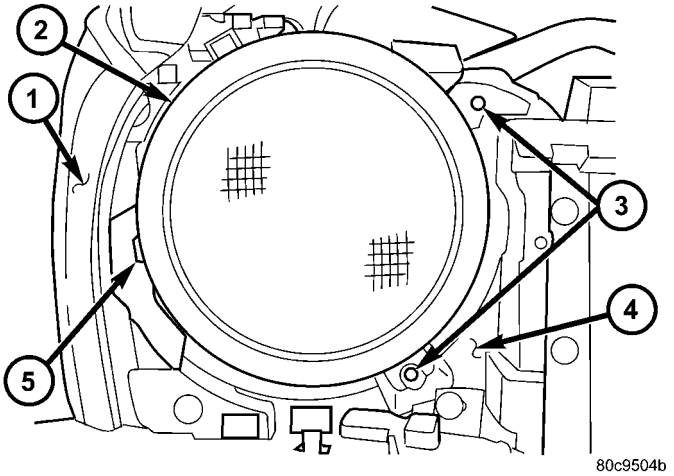

Fig. 34 Headlamp Unit Remove/Install

1 - FENDER PANEL
2 - HEADLAMP UNIT
3 - MOUNTING TAB (2)
4 - MOUNTING PANEL
5 - LOCATOR TAB

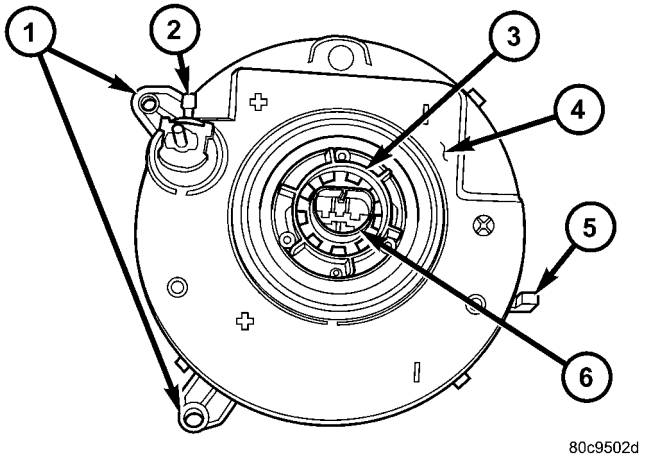

Fig. 35 Headlamp Unit - North America

1 - MOUNTING TAB (2)
2 - ADJUSTING SCREW
3 - LOCK RING
4 - HOUSING
5 - LOCATOR TAB
6 - SOCKET & BULB

socket (North America), the headlamp bulb base (Export), the front position lamp socket (if equipped), and the headlamp leveling motor (if equipped).

(6) Remove the headlamp from the grille opening reinforcement.

BULB - NORTH AMERICA

(1) Disconnect and isolate the battery negative cable.

(2) Reach behind the headlamp unit from the engine compartment side of the upper radiator cross-

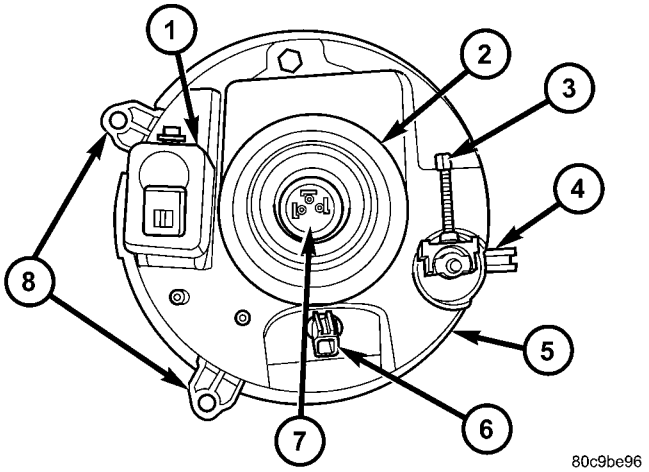

Fig. 36 Headlamp Unit - Export

1 - LEVELING MOTOR (IF EQUIPPED)
2 - BOOT SEAL
3 - ADJUSTING SCREW
4 - LOCATOR TAB
5 - HOUSING
6 - FRONT POSITION LAMP SOCKET & BULB
7 - HEADLAMP BULB
8 - MOUNTING TAB (2)

member to access the headlamp bulb lock ring (Fig. 37).

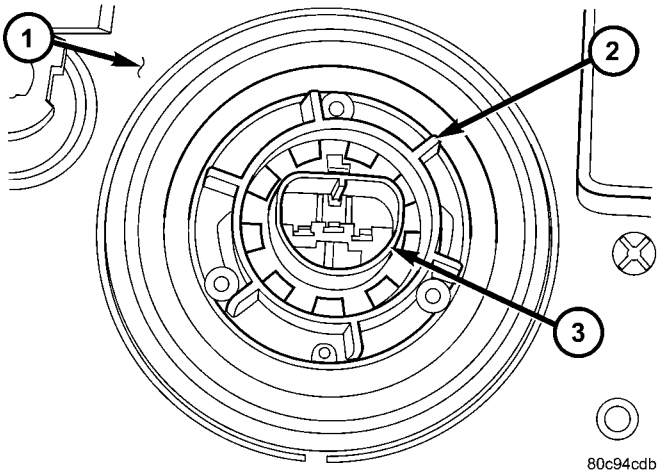

Fig. 37 Headlamp Bulb Lock Ring

1 - HEADLAMP UNIT HOUSING
2 - LOCK RING
3 - SOCKET & BULB

(3) Firmly grasp the lock ring on the back of the headlamp unit housing.

(4) Rotate the lock ring on the back of the headlamp housing counterclockwise about 30 degrees to unlock it.

HEADLAMP UNIT (Continued)

CAUTION: Do not contaminate the bulb glass by touching it with your fingers or by allowing it to contact other oily surfaces. Shortened bulb life will result.

(5) Pull the lock ring, socket, and bulb straight out of the keyed opening in the headlamp housing and up from behind the upper radiator crossmember (Fig. 38).

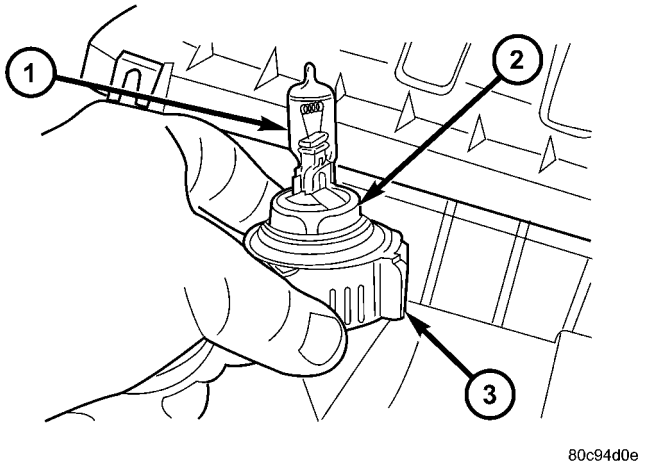

Fig. 38 Headlamp Bulb Remove/Install

1 - HEADLAMP BULB
2 - SOCKET
3 - LOCK RING

(6) Disconnect the grille opening reinforcement wire harness connector from the headlamp bulb socket connector receptacle.

(7) Remove the bulb and socket unit from the lock ring.

BULB - EXPORT

(1) Disconnect and isolate the battery negative cable.

(2) Remove the headlamp unit from the grille opening reinforcement. (Refer to 8 - ELECTRICAL/ LAMPS/LIGHTING - EXTERIOR/HEADLAMP UNIT - REMOVAL).

(3) Firmly grasp the tab of the headlamp boot seal on the back of the headlamp unit housing (Fig. 39).

(4) Pull the tab away from the back of the headlamp unit housing to remove the boot seal from the housing and the bulb base.

(5) Pinch the two hooked ends of the wire headlamp bulb retainer clip together and disengage them from the flange of the reflector (Fig. 40).

(6) Pivot the headlamp bulb retainer clip up off of the bulb flange and out of the way.

CAUTION: Do not contaminate the bulb glass by touching it with your fingers or by allowing it to contact other oily surfaces. Shortened bulb life will result.

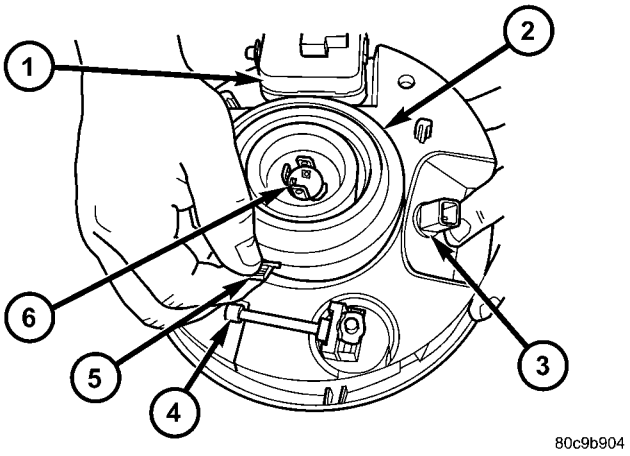

Fig. 39 Headlamp Bulb Boot Seal Remove

1 - LEVELING MOTOR (IF EQUIPPED)
2 - BOOT SEAL
3 - FRONT POSITION LAMP
4 - ADJUSTING SCREW
5 - TAB
6 - BULB BASE

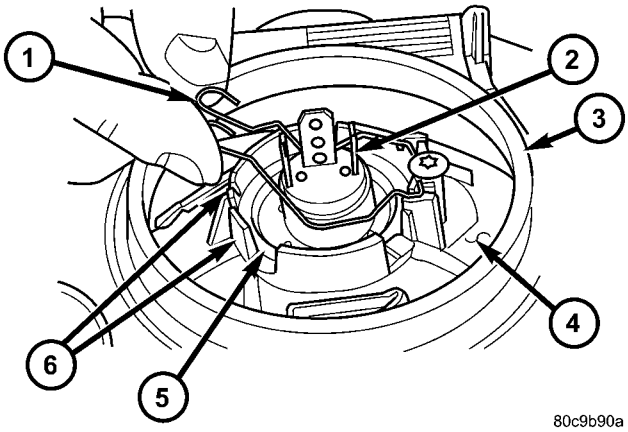

Fig. 40 Headlamp Bulb Retainer Clip Engage/ Disengage

1 - RETAINER CLIP
2 - BULB BASE
3 - HEADLAMP HOUSING
4 - REFLECTOR
5 - BULB FLANGE
6 - RETAINER SLOTS

(7) Pull the bulb straight out of the keyed opening in the headlamp reflector (Fig. 41).

HEADLAMP UNIT (Continued)

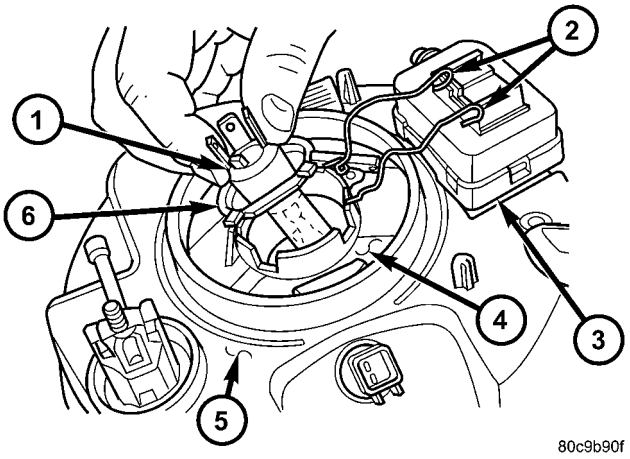

Fig. 41 Headlamp Bulb Remove/Install

1 - BULB BASE
2 - RETAINER CLIP
3 - LEVELING MOTOR (IF EQUIPPED)
4 - REFLECTOR
5 - HEADLAMP HOUSING
6 - BULB FLANGE

INSTALLATION

LAMP

(1) Position the headlamp unit to the grille opening reinforcement.

(2) Reconnect the wire harness connectors to the headlamp bulb socket (North America), the headlamp bulb base (Export), the front position lamp socket (if equipped), and the headlamp leveling motor (if equipped) (Fig. 35) or (Fig. 36).

(3) Engage the locator tab on the outboard side of the headlamp unit into the engagement slot in the outboard edge of the grille opening reinforcement.

(4) Align the two mounting tabs on the inboard side of the headlamp unit housing to the mounting holes in the grille opening reinforcement (Fig. 34).

(5) Install and tighten the two screws that secure the mounting tabs on the inboard side of the headlamp housing to the grille opening reinforcement. Tighten the screws to 3 N·m (30 in. lbs.).

(6) Reinstall the grille panel onto the grille opening reinforcement. (Refer to 23 - BODY/EXTERIOR/GRILLE - INSTALLATION).

(7) Reconnect the battery negative cable.

(8) Confirm proper headlamp unit alignment. (Refer to 8 - ELECTRICAL/LAMPS/LIGHTING - EXTERIOR/HEADLAMP UNIT - ADJUSTMENTS).

BULB - NORTH AMERICA

CAUTION: Always use the correct bulb size and type for replacement. An incorrect bulb size or type may overheat and cause damage to the lamp, the socket and/or the lamp wiring.

CAUTION: Do not contaminate the bulb glass by touching it with your fingers or by allowing it to contact other oily surfaces. Shortened bulb life will result.

(1) Position the headlamp bulb and socket into the lock ring (Fig. 38).

(2) Reconnect the grille opening reinforcement wire harness connector to the headlamp bulb socket connector receptacle.

(3) Position the lock ring, socket, and bulb down behind the upper radiator crossmember and align them with the keyed opening on the back of the headlamp unit housing.

(4) Push the socket and bulb unit straight into the headlamp housing until they are firmly seated.

(5) Position the lock ring over the socket and engage it with the flange on the back of the headlamp housing (Fig. 37).

(6) Rotate the lock ring on the back of the headlamp housing clockwise about 30 degrees to lock it into place.

(7) Reconnect the battery negative cable.

BULB - EXPORT

CAUTION: Always use the correct bulb size and type for replacement. An incorrect bulb size or type may overheat and cause damage to the lamp, the socket and/or the lamp wiring.

CAUTION: Do not contaminate the bulb glass by touching it with your fingers or by allowing it to contact other oily surfaces. Shortened bulb life will result.

(1) Position the bulb into the keyed opening in the headlamp reflector (Fig. 41).

(2) Pivot the headlamp bulb retainer clip back over the bulb flange.

(3) Pinch the two hooked ends of the wire headlamp bulb retainer clip together and engage them into the slots in the flange of the reflector (Fig. 40).

(4) Position the center opening of the boot seal over the base of the headlamp bulb and pull it downward until the seal is fully engaged over the bulb base (Fig. 39).

(5) Position the outer circumference of the boot seal over the flange on the back of the headlamp unit housing and pull it downward until the seal is fully engaged over the flange.

(6) Reinstall the headlamp unit onto the grille opening reinforcement. (Refer to 8 - ELECTRICAL/

HEADLAMP UNIT (Continued)

LAMPS/LIGHTING - EXTERIOR/HEADLAMP UNIT - INSTALLATION).

(7) Reconnect the battery negative cable.

(8) Confirm proper headlamp unit alignment. (Refer to 8 - ELECTRICAL/LAMPS/LIGHTING - EXTERIOR/HEADLAMP UNIT - ADJUSTMENTS).

ADJUSTMENTS

HEADLAMP UNIT

VEHICLE PREPARATION FOR HEADLAMP ALIGNMENT

(1) Verify headlamp dimmer (multi-function) switch and high beam indicator operation.

(2) If the vehicle is equipped with headlamp leveling, be certain that the headlamp leveling switch is in the “0” position.

(3) Repair or replace any faulty or damaged components that could hinder proper lamp alignment.

(4) Verify proper tire inflation.

(5) Clean headlamp lenses.

(6) Verify that cargo area is not heavily loaded.

(7) The fuel tank should be Full. Add 2.94 kilograms (6.5 pounds) of weight over the fuel tank for each estimated gallon of missing fuel.

HEADLAMP ALIGNMENT SCREEN PREPARATION

Prepare an alignment screen as illustrated.

(1) Position the vehicle on a level surface perpendicular to a flat wall 7.62 meters (25 feet) away from the front of the headlamp lens for North American vehicles, or 10.0 meters (32.81 feet) away from the front of the headlamp lens for Export vehicles (Fig. 42). If necessary, tape a line on the floor at the appropriate distance away from and parallel to the wall.

(2) Measure up on the wall 1.27 meters (5 feet) from the floor and tape a vertical line on the alignment screen at the centerline of the vehicle. Sight along the centerline of the vehicle (from the rear of the vehicle forward) to verify the accuracy of the centerline placement.

(3) Rock the vehicle from side-to-side three times to allow the suspension to stabilize, then jounce the front suspension three times by pushing downward on the front bumper and releasing. Measure the distance from the center of the headlamp lens to the floor. Transfer this measurement to the alignment

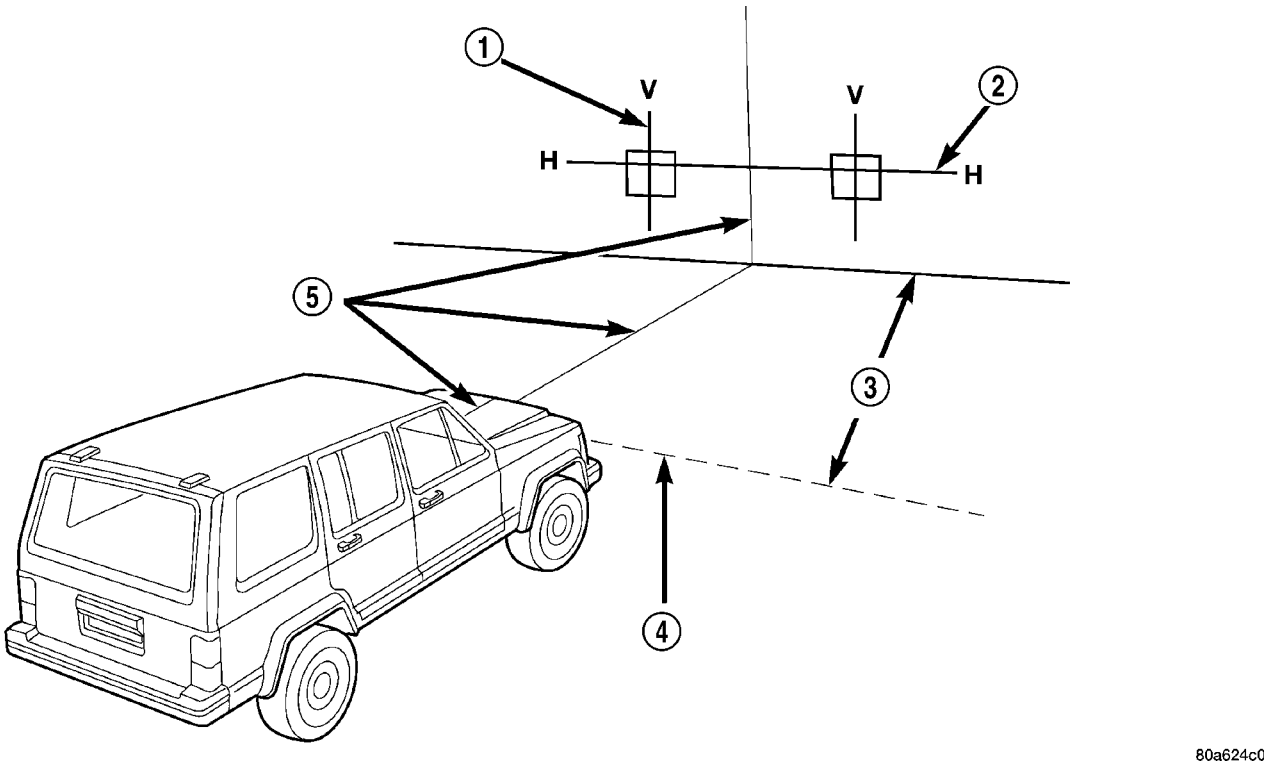

Fig. 42 Headlamp Alignment Screen - Typical

1 - CENTER OF VEHICLE TO CENTER OF HEADLAMP LENS
2 - FLOOR TO CENTER OF HEADLAMP LENS
3 - 7.62 METERS (25 FEET) NORTH AMERICA/10.0 METERS (32.81 FEET) REST-OF-WORLD
4 - FRONT OF HEADLAMP
5 - VEHICLE CENTERLINE

HEADLAMP UNIT (Continued)

screen and tape a horizontal line on the wall at this mark. This line will be used for up-and-down adjustment reference.

(4) Measure the distance from the centerline of the vehicle to the center of each headlamp being aligned. Transfer these measurements to the alignment screen and tape a vertical line this distance to each side of the vehicle centerline. These lines will be used for left/right reference.

HEADLAMP ADJUSTMENT

NOTE: A properly aligned headlamp will project a pattern on the alignment screen from just below horizontal to 75 millimeters (3 inches) below the headlamp centerline for vehicles in North America, or from just below horizontal to 125 millimeters (5 inches) below the headlamp horizontal centerline for vehicles in Export.

(1) Vehicles for all markets except Japan should have the headlamp low beams selected with the dimmer (multi-function) switch during the adjustment procedure. Vehicles for the Japanese market should have the headlamp high beams selected.

(2) Cover the lens of the headlamp that is not being adjusted.

(3) Turn the adjusting screw (Fig. 43) until the top edge of the beam intensity pattern is positioned from just below horizontal to 75 millimeters (3 inches) below the headlamp horizontal centerline for vehicles in North America, or from just below horizontal to 125 millimeters (5 inches) below the headlamp horizontal centerline for Export vehicles.

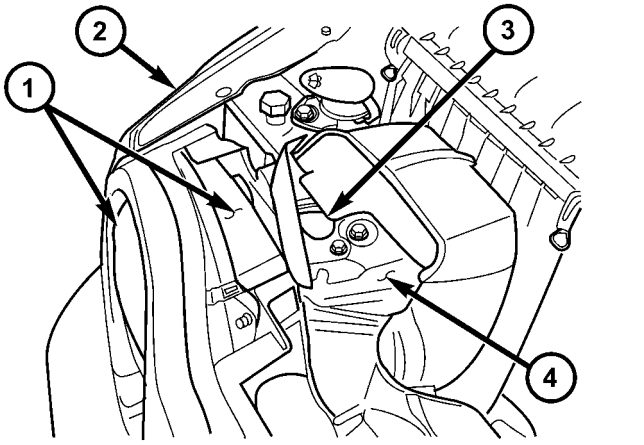

Fig. 43 Headlamp Adjusting Screw

1 - HEADLAMP UNIT
2 - FENDER PANEL
3 - ADJUSTING SCREW ACCESS HOLE
4 - UPPER RADIATOR CROSSMEMBER

(4) Repeat the adjustment procedure for the opposite headlamp.

LICENSE PLATE LAMP

REMOVAL

BULB - NORTH AMERICA

(1) Disconnect and isolate the battery negative cable.

(2) Reach through the opening in the rear bumper fascia between the license plate and the lamp to access the socket on the back of the license plate lamp unit housing (Fig. 44).

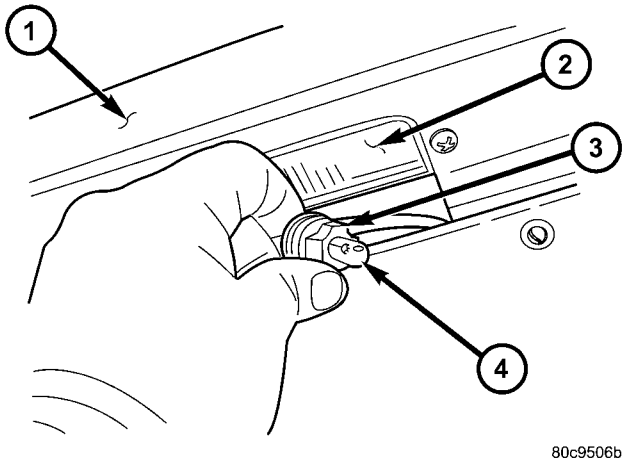

Fig. 44 License Plate Lamp Bulb Remove/Install - North America

1 - REAR BUMPER FASCIA
2 - LICENSE PLATE LAMP
3 - SOCKET
4 - BULB

(3) Firmly grasp and pull the socket and bulb straight out of the opening in the back of the license plate lamp housing.

(4) Pull the bulb straight out of the socket.

BULB - EXPORT

(1) Disconnect and isolate the battery negative cable.

(2) Unsnap and lift up the bottom of the license mounting plate far enough to access and remove the two screws that secure the license plate bracket to the special lug nuts on the spare tire (Fig. 45).

(3) Swing the license plate bracket away from the spare tire far enough to access the license plate lamp bulb sockets.

(4) Firmly grasp the socket on the top of the license plate lamp unit housing for the bulb that is being removed (Fig. 46).

LICENSE PLATE LAMP (Continued)

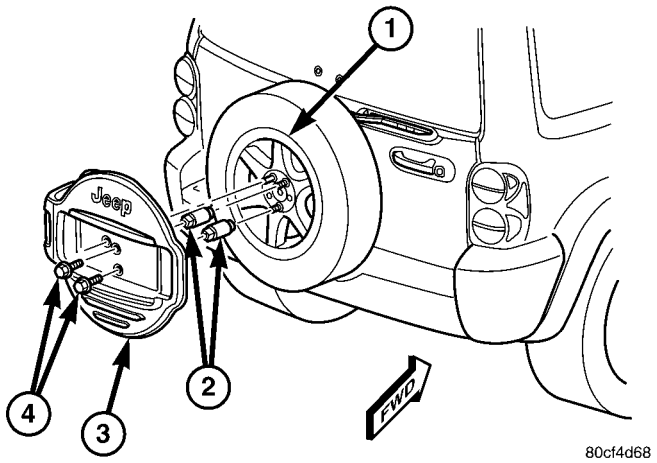

Fig. 45 License Plate Bracket - Export

1 - SPARE TIRE
2 - SPECIAL LUG NUT (2)
3 - LICENSE PLATE BRACKET
4 - SCREW (2)

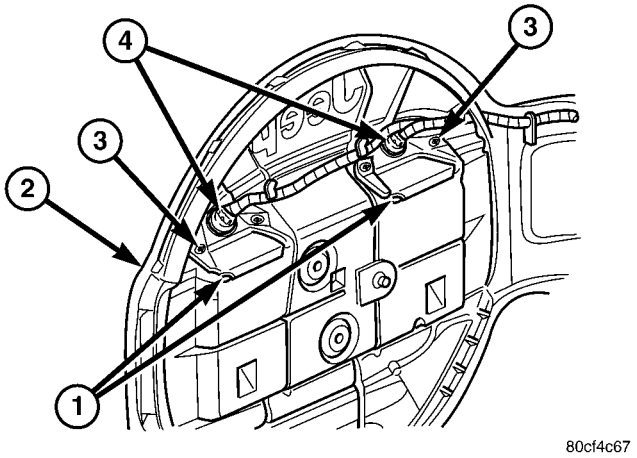

Fig. 46 License Plate Lamp Bulb Remove/Install - Export

1 - LAMP UNIT (2)
2 - LICENSE PLATE BRACKET
3 - SCREW (4)
4 - BULB & SOCKET (2)

(5) Rotate the socket counterclockwise about 30 degrees to unlock it.

(6) Pull the socket and bulb straight out from the keyed opening in the top of the lamp housing.

(7) Pull the base of the bulb straight out of the socket.

LAMP - NORTH AMERICA

(1) Disconnect and isolate the battery negative cable.

(2) Remove the two screws that secure the license plate lamp unit to the rear bumper fascia (Fig. 47).

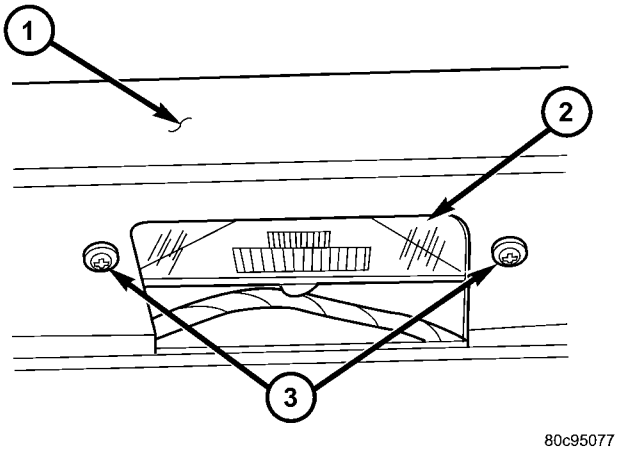

Fig. 47 License Plate Lamp Unit Remove/Install

1 - REAR BUMPER FASCIA
2 - LICENSE PLATE LAMP UNIT
3 - SCREW (2)

(3) Lower the lamp from the mounting hole in the fascia far enough to access and disconnect the lamp pigtail wire connector.

(4) Remove the license plate lamp unit from the vehicle.

LAMP - EXPORT

(1) Disconnect and isolate the battery negative cable.

(2) Remove the bulb and socket from the license plate lamp unit that is being removed. (Refer to 8 - ELECTRICAL/LAMPS/LIGHTING - EXTERIOR/LICENSE PLATE LAMP BULB - REMOVAL - REST-OF-WORLD).

(3) Remove the two screws that secure the lamp unit to the back of the license plate bracket (Fig. 48).

(4) Remove the lamp unit from the back of the license plate bracket.

LICENSE PLATE LAMP (Continued)

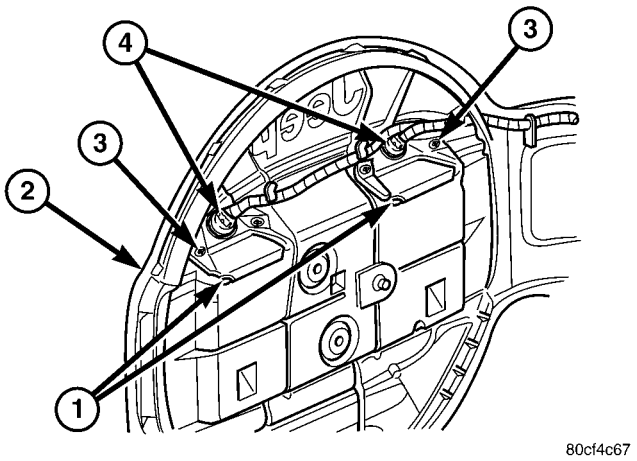

Fig. 48 License Plate Lamp Remove/Install - Export

1 - LAMP UNIT (2)
2 - LICENSE PLATE BRACKET
3 - SCREW (4)
4 - BULB & SOCKET (2)

INSTALLATION

BULB - NORTH AMERICA

CAUTION: Always use the correct bulb size and type for replacement. An incorrect bulb size or type may overheat and cause damage to the lamp, the socket and/or the lamp wiring.

(1) Align the base of the bulb with the license plate lamp socket.

(2) Push the bulb straight into the socket until the base is firmly seated.

(3) Reach through the opening in the rear bumper fascia between the license plate and the lamp to align the socket and bulb with the opening on the back of the lamp housing (Fig. 44).

(4) Insert the socket and bulb straight into the housing until the socket is firmly seated.

(5) Reconnect the battery negative cable.

BULB - EXPORT

CAUTION: Always use the correct bulb size and type for replacement. An incorrect bulb size or type may overheat and cause damage to the lamp, the socket and/or the lamp wiring.

(1) Align the base of the bulb with the license plate lamp socket.

(2) Push the bulb straight into the socket until the base is firmly seated.

(3) Align the socket and bulb with the keyed opening on the top of the license plate lamp housing (Fig. 46).

(4) Insert the socket and bulb into the housing until the socket is firmly seated.

(5) Rotate the socket clockwise about 30 degrees to lock it into place.

(6) Swing the license plate bracket back against the spare tire (Fig. 45).

(7) Lift up the bottom of the license mounting plate far enough to install and tighten the two screws that secure the license plate bracket to the special lug nuts on the spare tire. Tighten the screws to 28 N·m (21 ft. lbs.).

(8) Lower the bottom of the license mounting plate and snap it into place on the license plate bracket.

(9) Reconnect the battery negative cable.

LAMP - NORTH AMERICA

(1) Position the license plate lamp unit to the rear bumper fascia.

(2) Reconnect the lamp socket pigtail wire connector.

(3) Position the lamp unit into the mounting hole in the rear bumper fascia (Fig. 47).

(4) Install and tighten the two screws that secure lamp unit to the fascia. Tighten the screws to 2 N·m (20 in. lbs.).

(5) Reconnect the battery negative cable.

LAMP - EXPORT

(1) Position the license plate lamp unit onto the back of the license plate bracket (Fig. 48).

(2) Install and tighten the two screws that secure the lamp unit to the back of the license plate bracket. Tighten the screws to 2 N·m (20 in. lbs.).

(3) Reinstall the bulb and socket into the lamp unit. (Refer to 8 - ELECTRICAL/LAMPS/LIGHTING - EXTERIOR/LICENSE PLATE LAMP BULB - INSTALLATION - REST-OF-WORLD).

(4) Reconnect the battery negative cable.

LAMP BAR

REMOVAL

BULB

CAUTION: Do not contaminate the bulb glass by touching it with your fingers or by allowing it to contact other oily surfaces. Shortened bulb life will result.

LAMP BAR (Continued)

NOTE: The optional light bar includes either two or four lamps, depending upon the requirements in the market for which the vehicle is manufactured. Each lamp contains a single bulb. The service procedures for each of these bulbs is the same.

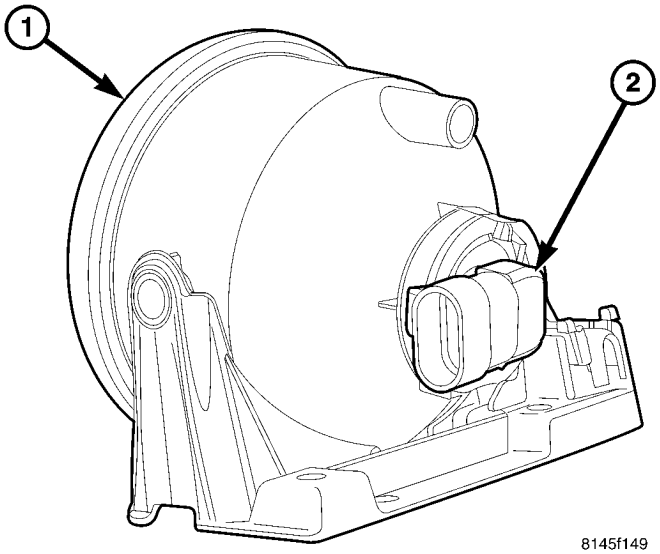

Fig. 49 Light Bar Lamp Bulb Remove/Install

1 - LAMP
2 - SOCKET

(1) Disconnect and isolate the battery negative cable.

(2) Remove the cover from the light bar lamps and reinforcement. (Refer to 8 - ELECTRICAL/LAMPS/LIGHTING - EXTERIOR/LIGHT BAR LAMP COVER - REMOVAL).

(3) Disconnect the wire harness connector from the light bar lamp socket (Fig. 49).

(4) Firmly grasp the socket on the back of the lamp housing and rotate it counterclockwise about 30 degrees to unlock it.

(5) Pull the socket and bulb straight out from the keyed opening in the housing.

(6) Pull the base of the bulb straight out of the socket.

LAMP

(1) Disconnect and isolate the battery negative cable.

(2) Remove the cover from the light bar lamps. (Refer to 8 - ELECTRICAL/LAMPS/LIGHTING - EXTERIOR/LIGHT BAR LAMP COVER - REMOVAL).

(3) Disconnect the light bar wire harness connector from the socket on the back of the lamp (Fig. 50).

(4) Remove the two screws that secure the rear of the lamp bracket to the reinforcement.

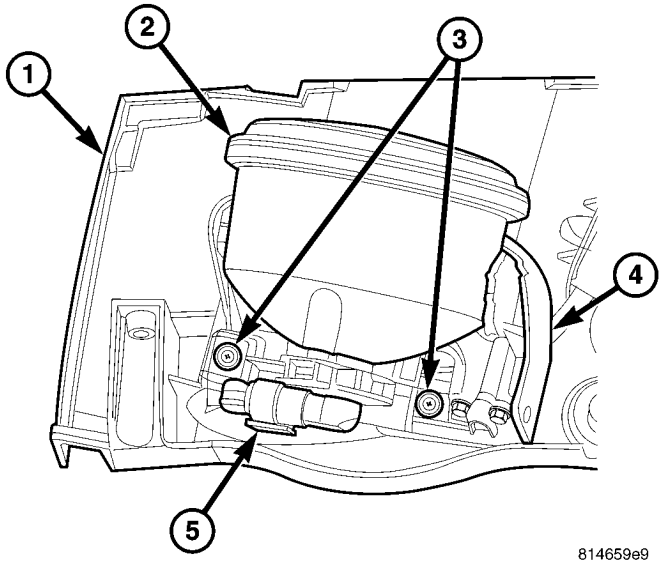

Fig. 50 Light Bar Lamp Remove/Install

1 - REINFORCEMENT
2 - LAMP
3 - SCREW (2)
4 - BRACKET
5 - CONNECTOR

NOTE: There is a hook on the forward edge of the lamp bracket secured under a tab that is integral to the reinforcement. The rear of the lamp must be lifted upward by the lamp socket/connector in order to disengage the hook from under the tab.

(5) Lift the lamp socket/connector on the rear of the lamp upward far enough to disengage the hook on the front edge of the lamp bracket from under the integral tab of the reinforcement (Fig. 51).

(6) Slide the lamp and bracket unit rearward and remove it from the reinforcement.

COVER

(1) Remove the four screws that secure the cover to the rear edge of the light bar reinforcement on the roof panel (Fig. 52).

(2) Lift the rear edge of the cover upward and then slide it forward far enough to disengage the front edge of the cover from under the front edge of the light bar reinforcement.

(3) Remove the light bar cover from the roof panel.

REINFORCEMENT

(1) Disconnect and isolate the battery negative cable.

(2) Remove the cover from the light bar lamps. (Refer to 8 - ELECTRICAL/LAMPS/LIGHTING - EXTERIOR/LIGHT BAR LAMP COVER - REMOVAL).

LAMP BAR (Continued)

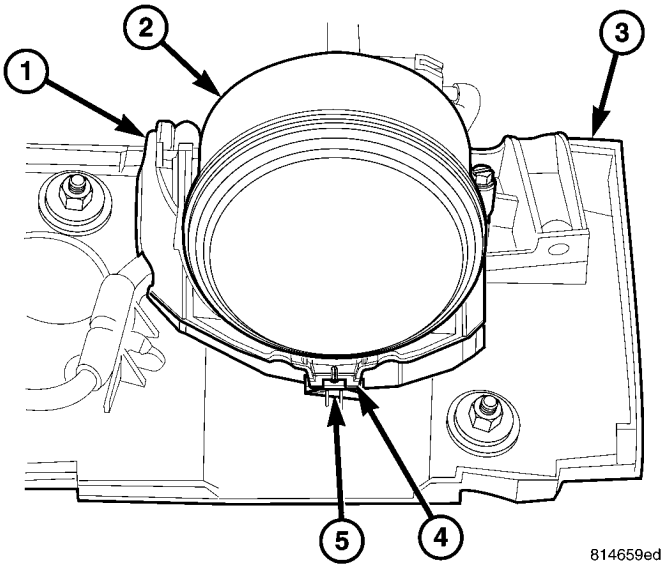

Fig. 51 Light Bar Lamp Tab

1 - BRACKET
2 - LAMP
3 - REINFORCEMENT
4 - HOOK
5 - TAB

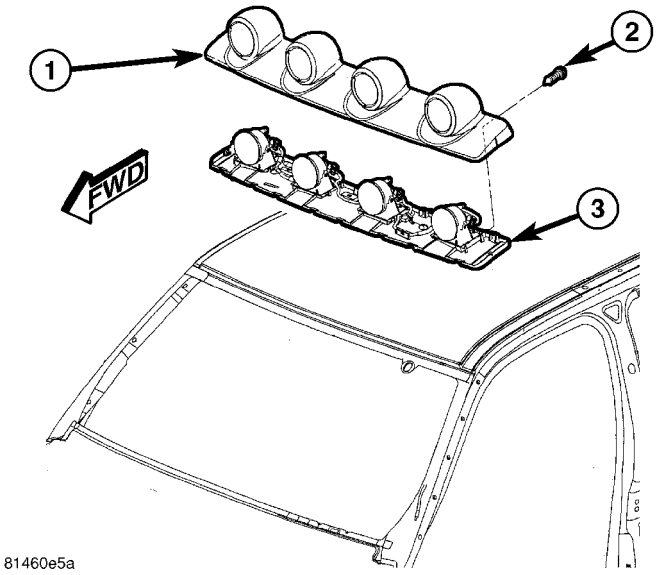

Fig. 52 Light Bar Lamp Cover Remove/Install

1 - COVER
2 - SCREW (4)
3 - LIGHT BAR

(3) Disconnect the jumper harness connector from the light bar reinforcement harness connector (Fig. 53).

(4) Remove the four nuts that secure the reinforcement to the rivet studs on the roof panel.

CAUTION: Four strips of double-faced adhesive tape serve to protect the roof panel and supplement the hard fasteners that secure the light bar reinforcement. Any residual tape and adhesive must be removed carefully to prevent damage to roof panel. Following removal, the roof panel and the bottom of the reinforcement must be thoroughly cleaned with isopropyl alcohol or another suitable solvent.

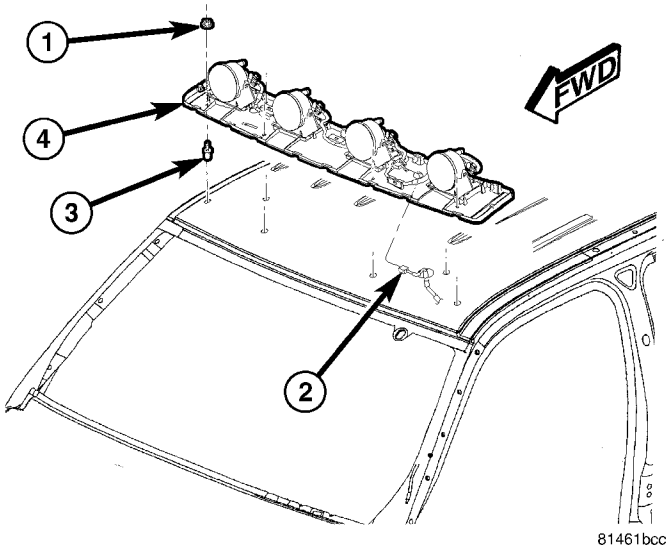

Fig. 53 Light Bar Reinforcement Remove/Install

1 - NUT & WASHER (4)
2 - JUMPER WIRE CONNECTOR
3 - RIVET STUD (4)
4 - LIGHT BAR REINFORCEMENT

(5) While lifting the light bar reinforcement upward from the roof panel, carefully feed the jumper wire and connector through the clearance hole in the reinforcement.

(6) Remove the reinforcement from the vehicle.

INSTALLATION

BULB

CAUTION: Always use the correct bulb size and type for replacement. An incorrect bulb size or type may overheat and cause damage to the lamp, the socket and/or the lamp wiring.

CAUTION: Do not contaminate the bulb glass by touching it with your fingers or by allowing it to contact other oily surfaces. Shortened bulb life will result.

LAMP BAR (Continued)

NOTE: The optional light bar includes either two or four lamps, depending upon the requirements in the market for which the vehicle is manufactured. Each lamp contains a single bulb. The service procedures for each of these bulbs is the same.

(1) Align the base of the bulb with the light bar lamp socket (Fig. 49).
(2) Push the bulb straight into the socket until the base is firmly seated.
(3) Align the socket and bulb with the keyed opening on the back of the light bar lamp housing.
(4) Insert the socket and bulb into the housing until the socket is firmly seated.
(5) Rotate the socket clockwise about 30 degrees to lock it into place.
(6) Reconnect the wire harness connector to the socket.
(7) Reinstall the cover over the light bar lamps and reinforcement. (Refer to 8 - ELECTRICAL/ LAMPS/LIGHTING - EXTERIOR/LIGHT BAR LAMP COVER - INSTALLATION).
(8) Reconnect the battery negative cable.

LAMP

(1) Position the lamp and bracket unit onto the light bar reinforcement (Fig. 51).

NOTE: There is a hook on the forward edge of the lamp bracket that must be secured under a tab that is integral to the reinforcement. The rear of the lamp must be lifted upward by the lamp socket/connector in order to engage the hook under the tab.

(2) Lift the lamp socket/connector on the rear of the lamp upward far enough to engage the hook on the front edge of the lamp bracket under the integral tab of the reinforcement.
(3) Slide the lamp and bracket forward and seat.
(4) Install and tighten the two screws that secure the rear of the lamp bracket to the reinforcement (Fig. 50). Tighten the screws to 2 N·m (17 in. lbs.).
(5) Reconnect the light bar wire harness connector to the socket on the back of the lamp.
(6) Reconnect the battery negative cable.
(7) Confirm proper lamp alignment. (Refer to 8 - ELECTRICAL/LAMPS/LIGHTING - EXTERIOR/ LIGHT BAR LAMP - ADJUSTMENTS).
(8) Reinstall the cover over the light bar lamps and reinforcement. (Refer to 8 - ELECTRICAL/ LAMPS/LIGHTING - EXTERIOR/LIGHT BAR LAMP COVER - INSTALLATION).

COVER

(1) Position the front edge of the light bar cover on the roof panel just ahead of the front edge of the light bar reinforcement (Fig. 52).
(2) Slide the cover rearward to engage the front edge of the cover under the forward edge of the reinforcement, then lower the rear edge of the cover into position.
(3) Install and tighten the four screws that secure the rear edge of the cover to the reinforcement. Tighten the screws to 2 N·m (17 in. lbs.).

REINFORCEMENT

CAUTION: Four strips of double-faced adhesive tape serve to protect the roof panel and supplement the hard fasteners that secure the light bar reinforcement. Any residual tape and adhesive must be removed carefully to prevent damage to roof panel. Following removal, the roof panel and the bottom of the reinforcement must be thoroughly cleaned with isopropyl alcohol or another suitable solvent. The mounting surfaces must be clean and dry before installation.

(1) Install four new strips of double-faced adhesive tape to the base of an existing reinforcement being reinstalled.
(2) Remove the release paper from the adhesive strips on the base of the new or existing reinforcement.
(3) With the aid of an assistant, carefully feed the jumper wire and connector through the clearance hole in the reinforcement while positioning the unit over the rivet studs on the roof panel (Fig. 53).
(4) Using hand pressure, press the reinforcement down firmly and evenly over each of the tape strips to be certain they are firmly secured to the roof panel.
(5) Install and tighten the four nuts that secure the reinforcement to the rivet studs on the roof panel. Tighten the nuts to 6 N·m (50 in. lbs.).
(6) Reconnect the jumper harness connector to the light bar reinforcement harness connector.
(7) Reconnect the battery negative cable.
(8) Confirm proper lamp alignment. (Refer to 8 - ELECTRICAL/LAMPS/LIGHTING - EXTERIOR/ LIGHT BAR LAMP - ADJUSTMENTS).
(9) Reinstall the cover over the light bar lamps and reinforcement. (Refer to 8 - ELECTRICAL/ LAMPS/LIGHTING - EXTERIOR/LIGHT BAR LAMP COVER - INSTALLATION).

LAMP BAR (Continued)

ADJUSTMENTS

LIGHT BAR LAMP

VEHICLE PREPARATION FOR LIGHT BAR LAMP ALIGNMENT

(1) Repair or replace any faulty or damaged components that could hinder proper lamp alignment.
(2) Verify proper tire inflation.
(3) Clean light bar lamp lenses.
(4) Verify that cargo area is not heavily loaded.
(5) The fuel tank should be Full. Add 2.94 kilograms (6.5 pounds) of weight over the fuel tank for each estimated gallon of missing fuel.

LIGHT BAR LAMP ALIGNMENT SCREEN PREPARATION

(1) Position the vehicle on a level surface perpendicular to a flat wall 7.62 meters (25 feet) away from the front of the headlamp lens. If necessary, tape a line on the floor at the appropriate distance away from and parallel to the wall.
(2) Measure up on the wall 2.36 meters (93 inches) from the floor and tape a horizontal line on the alignment screen that is approximately as long as the vehicle is wide. This line will be used for the light bar lamp up-and-down (vertical) adjustment reference.

LIGHT BAR LAMP ADJUSTMENT

NOTE: Only the vertical aim of the light bar lamp beams is adjustable.

(1) Rock the vehicle from side-to-side three times to allow the suspension to stabilize, then jounce the front suspension three times by pushing downward on the front bumper and releasing.
(2) Turn the adjusting screw on the back of the light bar lamp (Fig. 54) until the beam intensity pattern is centered on the up-and-down (vertical) adjustment reference tape on the alignment screen.
(3) Repeat the adjustment procedure for each lamp as required.

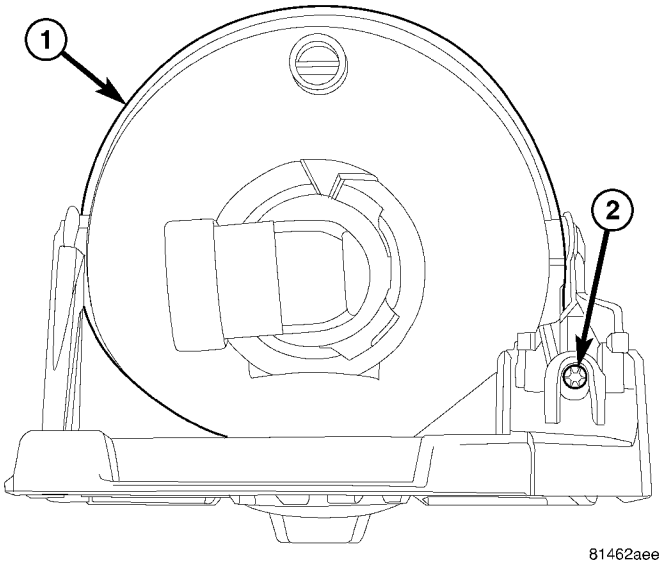

Fig. 54 Light Bar Lamp Adjustment Screw

1 - LIGHT BAR LAMP (REAR)
2 - ADJUSTMENT SCREW

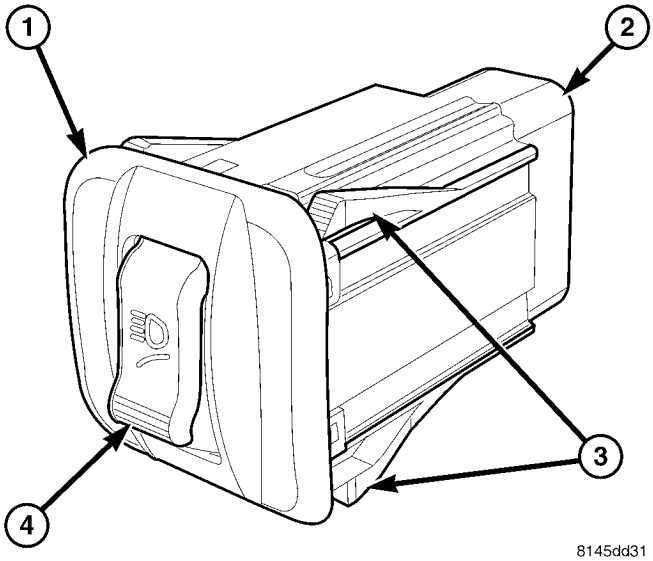

Fig. 55 Light Bar Lamp Switch

1 - SWITCH
2 - CONNECTOR RECEPTACLE
3 - LATCH (4)
4 - ROCKER

LAMP BAR SWITCH

DESCRIPTION

The light bar lamp switch (Fig. 55) is used only on vehicles equipped with the optional light bar and off road lamps. The light bar lamp switch is mounted in the driver side outboard trim bezel on the instrument panel. Only the switch bezel and rocker are visible on the outer surface of the instrument panel trim bezel. The black plastic switch rocker is marked with an icon that is similar in appearance to the International Control and Display Symbol icon for “High Beam”, but has an additional curved line beneath it to represent the forward roofline of the vehicle. The icon is illuminated when the exterior lighting is turned On.

The black, molded plastic switch housing encloses the momentary switch rocker mechanism and the switch circuitry including an integral relay and

LAMP BAR SWITCH (Continued)

active electronic elements. A connector receptacle is integral to the back of the switch housing, while a two integral latch features on the top and bottom of the housing secure the switch in the instrument panel trim bezel. The switch is connected to the vehicle electrical system through a dedicated take out and connector of the instrument panel wire harness.

The light bar lamp switch cannot be adjusted or repaired and, if faulty or damaged, the unit must be replaced.

OPERATION

In vehicles manufactured for North American markets, the light bar lamp switch operates on battery voltage received on a fused ignition switch output (run-start) circuit from a fuse in the Junction Block (JB) whenever the ignition switch is in the On or Start positions. In vehicles manufactured for export markets, the switch operates on battery voltage received from the park lamp relay in the JB on a park lamp relay output circuit whenever the park lamp relay is energized. The switch receives a path to ground through a splice block in the instrument panel wire harness secured by a nut to a ground stud on the driver side instrument panel end bracket near the JB.

The switch also receives battery voltage on a fused B(+) circuit that the relay within the switch controls to energize and de-energize the light bar lamps through an output on the lightbar switch output circuit. A panel lamps driver input is used to illuminate the icon on the switch rocker when the exterior lighting is turned On. In certain markets where it is required, the switch also receives a logic input on a low beam driver circuit, which allows the switch to disallow the light bar lamps from operating unless the park lamps are turned On and the low beam headlamps are turned Off.

Another output from the switch is a voltage signal that it provides to the Body Control Module (BCM) on a lightbar switch sense circuit. The BCM sends electronic messages over the Programmable Communications Interface (PCI) data bus to the instrument cluster based upon this input to control illumination of the light bar lamp indicator and/or the high beam indicator as required by the market for which the vehicle was manufactured.

Because of active electronic elements within the light bar lamp switch, it cannot be tested using conventional diagnostic tools or procedures. If a problem is noted with the light bar lamp system operation, test and confirm the input and output circuits of the switch are in good condition before replacing the switch.

REMOVAL

WARNING: To avoid personal injury or death, on vehicles equipped with airbags, disable the supplemental restraint system before attempting any steering wheel, steering column, airbag, occupant classification system, seat belt tensioner, impact sensor, or instrument panel component diagnosis or service. Disconnect and isolate the battery negative (ground) cable, then wait two minutes for the system capacitor to discharge before performing further diagnosis or service. This is the only sure way to disable the supplemental restraint system. Failure to take the proper precautions could result in accidental airbag deployment.

NOTE: A light bar lamp switch is used only on vehicles equipped with the optional light bar and auxiliary off-road lamps.

(1) Disconnect negative battery cable.

(2) Remove the driver side outboard bezel from the instrument panel (Fig. 56). (Refer to 23 - BODY/INSTRUMENT PANEL/INSTRUMENT PANEL DRIVER SIDE BEZEL - REMOVAL).

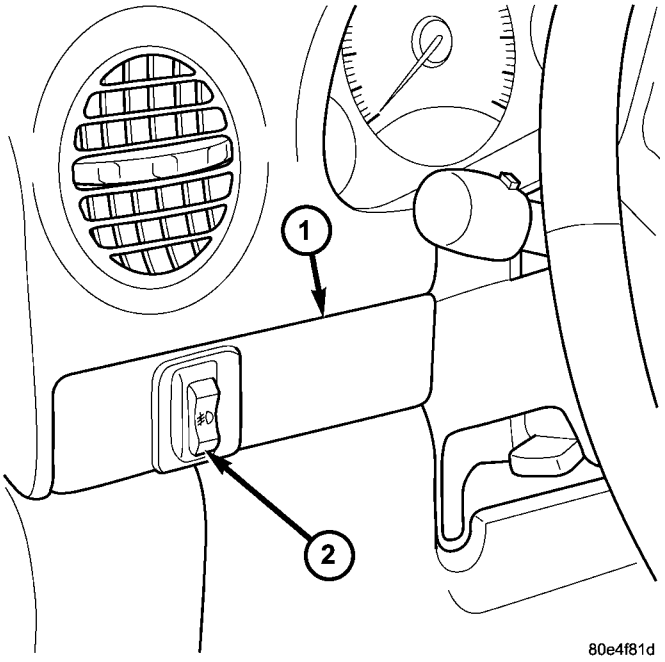

Fig. 56 Light Bar Lamp Switch

1 - BEZEL
2 - SWITCH

(3) Disconnect the instrument panel wire harness connector from the light bar lamp switch connector receptacle.

(4) From the back of the trim bezel, depress the two lower latch features on the switch housing and

LAMP BAR SWITCH (Continued)

rock the bottom of the switch out through the face of the bezel.

(5) From the back of the trim bezel, depress the two upper latch features on the switch housing and push the switch out through the face of the bezel.

INSTALLATION

WARNING: To avoid personal injury or death, on vehicles equipped with airbags, disable the supplemental restraint system before attempting any steering wheel, steering column, airbag, occupant classification system, seat belt tensioner, impact sensor, or instrument panel component diagnosis or service. Disconnect and isolate the battery negative (ground) cable, then wait two minutes for the system capacitor to discharge before performing further diagnosis or service. This is the only sure way to disable the supplemental restraint system. Failure to take the proper precautions could result in accidental airbag deployment.

NOTE: A light bar lamp switch is used only on vehicles equipped with the optional light bar and auxiliary off-road lamps.

(1) From the face of the driver side outboard bezel, align the light bar lamp switch housing to the mounting hole in the bezel (Fig. 56).

(2) Push the switch into the mounting hole until it is fully seated and each of the latch features is fully engaged.

(3) Reconnect the instrument panel wire harness connector to the switch connector receptacle.

(4) Reinstall the trim bezel and switch unit onto the instrument panel. (Refer to 23 - BODY/INSTRUMENT PANEL/INSTRUMENT PANEL DRIVER SIDE BEZEL - INSTALLATION).

(5) Reconnect the battery negative cable.

MARKER LAMP

REMOVAL

BULB

NOTE: The following procedure applies only to vehicles manufactured for the North American market. Vehicles manufactured for export markets do not have a bulb, socket or wiring provided to illuminate the front side marker lamp. The front side marker lamp housing and lens are present, but serve only as a reflector on export vehicles.

(1) Turn the front wheels full lock toward the same side of the vehicle as the lamp being serviced.

(2) Disconnect and isolate the battery negative cable.

(3) Remove the four fasteners securing the front of the adjacent right or left front fender wheel liner to the lower edge of the front bumper fascia and the outboard surface of the frame rail ahead of the front wheel.

(4) Reach between the front of the wheel liner and the lower fascia to access the back of the front side marker lamp unit housing (Fig. 57).

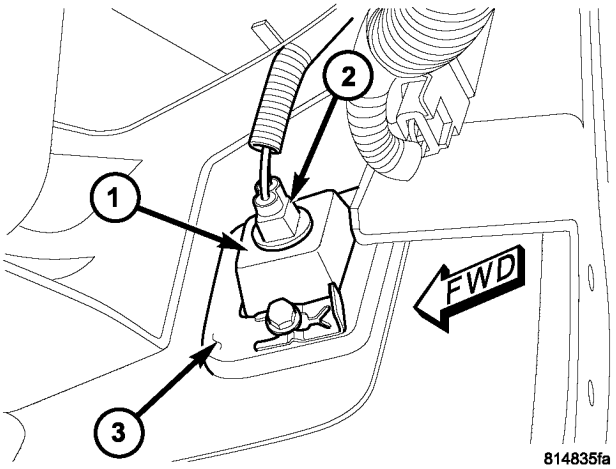

Fig. 57 Front Side Marker Lamp Bulb

1 - HOUSING
2 - SOCKET
3 - FASCIA

(5) Firmly grasp the front side marker bulb socket on the back of the lamp housing and rotate it counterclockwise about 30 degrees to unlock it.

(6) Pull the socket and bulb straight out from the keyed opening in the housing.

(7) Pull the base of the bulb straight out of the socket.

LAMP

NOTE: Vehicles manufactured for export markets do not have a bulb, socket or wiring provided to illuminate the front side marker lamp. The front side marker lamp housing and lens are present, but serve only as a reflector on export vehicles.

(1) Turn the front wheels full lock toward the same side of the vehicle as the lamp being serviced.

(2) Disconnect and isolate the battery negative cable.

MARKER LAMP (Continued)

(3) Remove the four fasteners securing the front of the adjacent right or left front fender wheel liner to the lower edge of the front bumper fascia and the outboard surface of the frame rail ahead of the front wheel.

(4) Reach between the front of the wheel liner and the lower fascia to access the back of the front side marker lamp unit housing (Fig. 58).

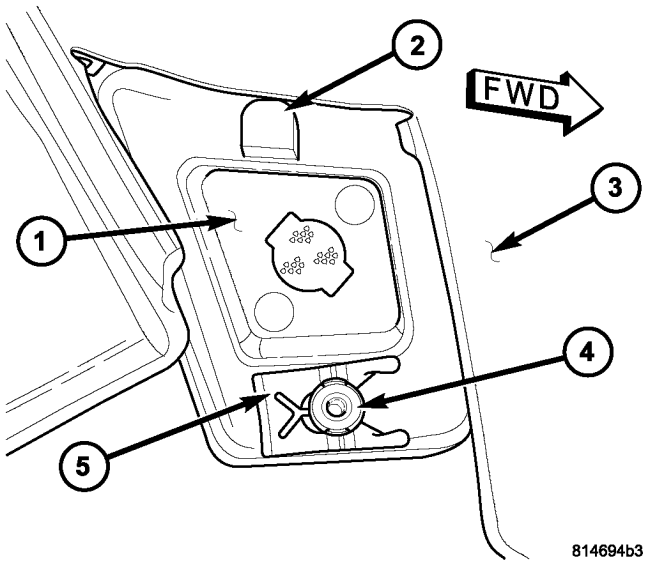

Fig. 58 Front Side Marker Lamp

1 - LAMP
2 - TAB
3 - FASCIA
4 - PIN
5 - CLIP

(5) If the vehicle is so equipped, firmly grasp the front side marker bulb socket on the back of the lamp housing and rotate it counterclockwise about 30 degrees to unlock it.

(6) If the vehicle is so equipped, pull the socket and bulb straight out from the keyed opening in the housing.

(7) Slide the retaining clip off of the pin integral to the lower end of the lamp housing that secures the lamp to the fascia.

(8) Push the lower end of the lamp out through the outside of the fascia far enough to disengage the tab at the top of the lamp from the notch at the top of the lamp mounting hole.

(9) Remove the lamp from the outside of the fascia.

INSTALLATION

BULB

NOTE: The following procedure applies only to vehicles manufactured for the North American market. Vehicles manufactured for export markets do not have a bulb, socket or wiring provided to illuminate the front side marker lamp. The front side marker lamp housing and lens are present, but serve only as a reflector on export vehicles.

(1) Align the base of the bulb with the front side marker bulb socket (Fig. 57).

(2) Push the bulb straight into the socket until the base is firmly seated.

(3) Reach between the front of the adjacent right or left front fender wheel liner and the lower bumper fascia to access the back of the lamp housing.

(4) Align the socket and bulb with the keyed opening on the back of the housing.

(5) Insert the socket and bulb into the housing until the socket is firmly seated.

(6) Rotate the socket clockwise about 30 degrees to lock it into place.

(7) Reinstall the four fasteners securing the front of the wheel liner to the lower edge of the fascia and the outboard surface of the frame rail ahead of the front wheel.

(8) Reconnect the battery negative cable.

LAMP

NOTE: Vehicles manufactured for export markets do not have a bulb, socket or wiring provided to illuminate the front side marker lamp. The front side marker lamp housing and lens are present, but serve only as a reflector on export vehicles.

(1) Position the front side marker lamp unit to the lamp mounting hole on the outside of the fascia.

(2) Engage the tab at the top of the lamp into the notch at the top of the mounting hole then push the pin on the lower end of the lamp through the round hole at the base of the mounting hole (Fig. 58).

(3) Reach between the front of the adjacent right or left front fender wheel liner and the lower bumper fascia to access the back of the lamp housing.

(4) Slide the retaining clip onto the pin on the lower end of the lamp housing to secure the lamp to the fascia.

(5) If the vehicle is so equipped, align the socket and bulb with the keyed opening on the back of the housing.

(6) If the vehicle is so equipped, insert the socket and bulb into the housing until the socket is firmly seated.

MARKER LAMP (Continued)

(7) If the vehicle is so equipped, rotate the socket clockwise about 30 degrees to lock it into place.

(8) Reinstall the four fasteners securing the front of the wheel liner to the lower edge of the fascia and the outboard surface of the frame rail ahead of the front wheel.

(9) Reconnect the battery negative cable.

MULTI-FUNCTION SWITCH

DESCRIPTION

The multi-function switch is located on the steering column, just below the steering wheel (Fig. 59). The only visible components of the multi-function switch are the right and left control stalks. One stalk extends through the steering column shrouds on each side of the steering column. The remainder of the switch including its mounting provisions, its electrical connection, and the turn signal cancel actuator (5) are concealed beneath the shrouds.

The switch housing and controls are constructed of molded black plastic. A saddle-like formation in the center of the lower switch housing straddles the steering column tube just below the column lock housing, and two locating posts integral to the lower surface of the switch housing engage two holes in the forward-facing side of the lock housing. Also several integral ledge-like locating tabs on the switch housing are supported and located by several mating points on the column lock housing. When the steering column shrouds are installed on the column, mounting tabs on the switch housing and the clockspring are clamped to the lock housing by the same two screws that secure the column shrouds to the column and each other.

There are several versions of the multi-function switch to support both optional equipment and regulatory equipment that is required only in certain markets. Each multi-function switch control stalk has both white nomenclature and International Control and Display Symbol graphics applied to it, which clearly identify its many functions. Each control stalk has a control knob on its end with a flattened face to allow it to be easily rotated. On vehicles equipped with optional front fog lamps, the knob on the end of left control stalk can also be pulled outward to select those lamps.

Each control stalk also features a knurled control ring located just below the control knob. The left control stalk is dedicated to providing driver controls for the interior and exterior lighting systems, while the right control stalk is dedicated to providing driver controls for the front and rear wiper systems.

Two integral connector receptacles on the multi-function switch housing connect the switch to the vehicle electrical system through two dedicated take outs and connectors of the instrument panel wire harness. The left connector receptacle contains nine terminal pins for the lighting control circuits of the switch, while the right connector receptacle contains

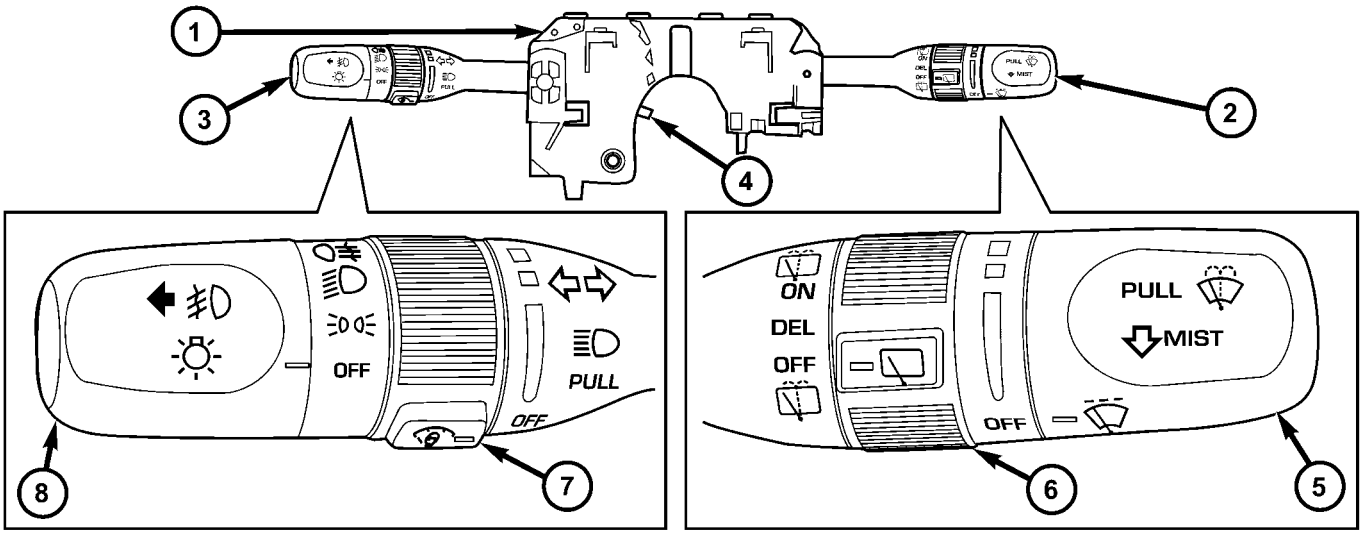

80c950a7

Fig. 59 Multi-Function Switch

1 - MULTI-FUNCTION SWITCH
2 - RIGHT (WIPER) CONTROL STALK
3 - LEFT (LIGHTING) CONTROL STALK
4 - TURN SIGNAL CANCEL ACTUATOR
5 - RIGHT (WIPER) CONTROL KNOB
6 - RIGHT (WIPER) CONTROL RING
7 - LEFT (LIGHTING) CONTROL RING
8 - LEFT (LIGHTING) CONTROL KNOB

MULTI-FUNCTION SWITCH (Continued)

six terminal pins for the wiper control circuits of the switch.

The multi-function switch cannot be adjusted or repaired. If any function of the switch is faulty, or if the switch is damaged, the entire switch must be replaced as a unit.

LEFT CONTROL STALK

The left (lighting) control stalk of the multi-function switch supports the following functions and features:

- **Front Fog Lamps** - For vehicles so equipped, the left multi-function switch control knob provides detent switching for the optional front fog lamps.
- **Headlamps** - The left multi-function switch control knob provides detent switching for the headlamps.
- **Headlamp Beam Selection** - The left multi-function switch control stalk provides detent switching for selection of the headlamp high or low beams.
- **Headlamp Optical Horn** - The left multi-function switch control stalk includes momentary switching of the headlamp high beam circuits to provide an optical horn feature (sometimes referred to as flash-to-pass), which allows the vehicle operator to momentarily flash the headlamp high beams as an optical signalling device.
- **Interior Lamps Defeat** - The left multi-function switch control ring provides detent switching to defeat the illumination of all interior courtesy lamps when a door, the rear flip-up glass, or the tailgate are opened.
- **Interior Lamps On** - The left multi-function switch control ring provides detent switching to simultaneously illuminate all interior courtesy lamps.
- **Panel Lamps Dimming** - The left multi-function switch control ring provides simultaneous adjustable control of the illumination intensity of all instrument panel lighting at one of six available illumination intensity levels.
- **Parade Mode** - The left multi-function switch control ring provides detent switching for a parade mode that maximizes the illumination intensity of all instrument panel lighting for visibility when driving in daylight with the exterior lamps turned on.
- **Park Lamps** - The left multi-function switch control knob provides detent switching for the park lamps.
- **Rear Fog Lamps** - For vehicles so equipped, the left multi-function switch control knob provides detent switching for the optional rear fog lamps. Rear fog lamps are optional only for vehicles manufactured for certain markets, where they are required.
- **Turn Signal Control** - The left multi-function switch control stalk provides both momentary non-detent switching and detent switching with automatic cancellation for both the left and right turn signal lamps.

RIGHT CONTROL STALK

The right (wiper) control stalk of the multi-function switch supports the following functions and features:

- **Continuous Front Wipe Modes** - The right multi-function switch control knob provides two continuous front wipe switch positions, low speed or high speed.
- **Continuous Rear Wipe Mode** - The right multi-function switch control ring provides one continuous rear wipe switch position.
- **Front Washer Mode** - The right multi-function switch control stalk provides front washer system operation.
- **Front Wipe-After-Wash Mode** - The right multi-function switch control stalk provides a wipe-after-wash mode.
- **Front Wiper Mist Mode** - The right multi-function switch control stalk provides a front wiper system mist mode.
- **Intermittent Front Wipe Mode** - The right multi-function switch control knob provides an intermittent front wipe mode with five delay interval positions.
- **Intermittent Rear Wipe Mode** - The right multi-function switch control ring provides one fixed interval intermittent rear wipe mode switch position.
- **Rear Washer Mode** - The right multi-function switch control ring provides rear washer system operation.

OPERATION

The multi-function switch uses a combination of resistor multiplexed and conventionally switched outputs to control the many functions and features it provides. The switch receives battery voltage on a fused ignition switch output (run-acc) circuit from a fuse in the Junction Block (JB) whenever the ignition switch is in the On or Accessory positions. The switch receives a path to ground at all times through a ground stud on the driver side instrument panel end bracket near the Junction Block (JB).

The multi-function switch can be diagnosed using conventional diagnostic tools and methods. However, proper testing of the multiplexed inputs to the Body Control Module (BCM) requires the use of a diagnostic scan tool. Refer to the appropriate diagnostic information.

Following are brief descriptions of how each of the two multi-function switch control stalks operate to control the functions and features they provide.

MULTI-FUNCTION SWITCH (Continued)

LEFT CONTROL STALK

The left (lighting) control stalk of the multi-function switch operates as follows:

- **Front Fog Lamps** - For vehicles so equipped, the control knob on the end of the multi-function switch left (lighting) control stalk is pulled outward to activate the optional front fog lamps. The control knob is mechanically keyed so that it cannot be pulled outward unless it is first rotated to turn On the exterior lighting. The multi-function switch provides a resistor multiplexed output to the Body Control Module (BCM) on a fog lamp switch sense circuit, and the BCM responds by energizing or de-energizing the front fog lamp relay in the Junction Block (JB).
- **Headlamps** - The control knob on the end of the multi-function switch left (lighting) control stalk is rotated forward to its second detent position to activate the headlamps. The multi-function switch provides a resistor multiplexed output to the Body Control Module (BCM) on a headlamp switch sense circuit, and the BCM responds by energizing or de-energizing the selected low or high beam relay (Daytime Running Lamp relay in Canadian vehicles) in the Junction Block (JB).
- **Headlamp Beam Selection** - The left (lighting) control stalk of the multi-function switch is pulled towards the steering wheel past a detent to actuate the integral beam select switch circuitry. Each time the control stalk is activated in this manner, the opposite headlamp beam from what is currently selected will be energized. The multi-function switch provides a ground output to the Body Control Module (BCM) on a high beam switch sense circuit, and the BCM responds by energizing or de-energizing the selected low or high beam relay (Daytime Running Lamp relay in Canadian vehicles) in the Junction Block (JB).
- **Headlamp Optical Horn** - The left (lighting) control stalk of the multi-function switch is pulled towards the steering wheel to just before a detent, to momentarily activate the headlamp optical horn feature. The high beams will remain illuminated until the control stalk is released. The multi-function switch provides a ground output on a high beam relay control circuit to energize the headlamp high beam relay (Daytime Running Lamp relay in Canadian vehicles) in the Junction Block (JB).
- **Interior Lamps Defeat** - The control ring on the multi-function switch left (lighting) control stalk is rotated to a full rearward (clockwise) detent to defeat the illumination of all interior courtesy lamps. The multi-function switch provides a resistor multiplexed output to the Body Control Module (BCM) on a panel lamps dimmer switch circuit, and the BCM responds by de-energizing its internal courtesy lamp driver circuit.
- **Interior Lamps On** - The control ring on the multi-function switch left (lighting) control stalk is rotated to a full forward detent to illuminate all interior courtesy lamps. The multi-function switch provides a resistor multiplexed output to the Body Control Module (BCM) on a panel lamps dimmer switch circuit, and the BCM responds by energizing its internal courtesy lamp driver circuit.
- **Panel Lamps Dimming** - The control ring on the multi-function switch left (lighting) control stalk is rotated to one of six minor intermediate detents to simultaneously select the desired illumination intensity of all adjustable instrument panel and instrument cluster lighting. The control ring is rotated rearward to dim, or forward to brighten. The multi-function switch provides a resistor multiplexed output to the Body Control Module (BCM) on a panel lamps dimmer switch circuit, and the BCM responds by sending an electronic panel lamps dimming level message to the ElectroMechanical Instrument Cluster (EMIC) over the Programmable Communications Interface (PCI) data bus. The EMIC electronic circuitry then provides the proper PWM output to the cluster illumination lamps and the Vacuum Florescent Display (VFD) on the EMIC circuit board, and provides a matching Pulse Width Modulation (PWM) output on the hard wired fused panel lamps dimmer switch signal circuit.
- **Parade Mode** - The control ring on the multi-function switch left (lighting) control stalk is rotated to an intermediate detent that is one detent rearward from the full forward detent to select the Parade mode. The multi-function switch provides a resistor multiplexed output to the Body Control Module (BCM) on a panel lamps dimmer switch circuit, and the BCM responds by sending an electronic panel lamps dimming level message to the ElectroMechanical Instrument Cluster (EMIC) over the Programmable Communications Interface (PCI) data bus. The EMIC electronic circuitry then provides the proper PWM output to the cluster illumination lamps and the VFD on the EMIC circuit board, and provides a matching PWM output on the hard wired fused panel lamps dimmer switch signal circuit to illuminate all lamps at full (daylight) intensity with the exterior lamps turned On.
- **Park Lamps** - The control knob on the end of the multi-function switch left (lighting) control stalk is rotated forward to its first detent from the Off position to activate the park lamps. The multi-function switch provides a resistor multiplexed output to the Body Control Module (BCM) on a headlamp switch sense circuit, and the BCM responds by ener-

MULTI-FUNCTION SWITCH (Continued)

gizing or de-energizing the park lamp relay in the Junction Block (JB).

• **Rear Fog Lamps** - For vehicles so equipped, the control knob on the end of the multi-function switch left (lighting) control stalk is rotated forward to its third detent position to activate the rear fog lamps. The multi-function switch provides a resistor multiplexed output to the Body Control Module (BCM) on a headlamp switch sense circuit, and the BCM responds by energizing or de-energizing the rear fog lamp relay in the Junction Block (JB). Rear fog lamps are optional only for vehicles manufactured for markets, where they are required.

• **Turn Signal Control** - The left (lighting) control stalk of the multi-function switch is moved upward to activate the right turn signal circuitry, and downward to activate the left turn signal circuitry. The turn signal switch has a detent position in each direction that provides turn signals with automatic cancellation, and an intermediate, momentary position in each direction that provides turn signals only until the left multi-function switch control stalk is released. When the control stalk is moved to a turn signal switch detent position, the cancel actuator extends toward the center of the steering column. A turn signal cancel cam is integral to the clockspring and rotates with the steering wheel. The cam lobe contacts the cancel actuator when it is extended from the multi-function switch. When the steering wheel is rotated during a turning maneuver, the turn signal cancel cam lobe will contact the turn signal cancel actuator. The cancel actuator latches against the cancel cam rotation in the direction opposite that which is signaled. If the left turn signal detent is selected, the lobe of the cancel cam will ratchet past the cancel actuator when the steering wheel is rotated to the left, but will unlatch the cancel actuator as the steering wheel rotates to the right and returns to center, which will cancel the turn signal event and release the control stalk from the detent so it returns to the neutral Off position. When a turn signal is activated, the multi-function switch provides a ground output on a right or left turn switch sense circuit to the combination flasher circuitry within the hazard switch, and the combination flasher flashes the turn signal lamps.

RIGHT CONTROL STALK

The right (wiper) control stalk of the multi-function switch operates as follows:

• **Continuous Front Wipe Modes** - The control knob on the end of the multi-function switch right (wiper) control stalk is rotated to an intermediate detent that is one detent rearward from the full forward detent to select the low speed continuous front wiper mode, or to its full forward detent to select the high speed continuous front wiper mode. The multi-function switch provides a resistor multiplexed output to the Body Control Module (BCM) on a front wiper switch circuit, and the BCM responds by energizing the wiper on/off relay in the Power Distribution Center (PDC) for the front low speed continuous wipe mode, or the wiper on/off relay and the wiper high/low relay in the PDC for the front high speed continuous wipe mode as required.

• **Continuous Rear Wipe Mode** - The control ring on the multi-function switch right (wiper) control stalk is rotated to the most forward detent to select the continuous rear wiper mode. The multi-function switch provides a battery voltage output to the rear wiper motor on a rear wiper on driver circuit to signal the rear wiper motor to operate in the continuous wipe mode.

• **Front Washer Mode** - The right (wiper) control stalk of the multi-function switch is pulled towards the steering wheel to momentarily activate the washer pump in the front washer mode. The washer pump will continue to operate in the front washer mode until the control stalk is released. The multi-function switch provides a ground output on a washer pump sense circuit, and battery voltage on a washer pump driver circuit to energize the washer pump in the front washer mode.

• **Front Wiper Mist Mode** - The right (wiper) control stalk of the multi-function switch is pushed towards the floor to momentarily activate the front wiper motor in the mist mode. The front wiper motor will continue to operate in the mist mode until the control stalk is released. The multi-function switch provides a resistor multiplexed output to the Body Control Module (BCM) on a front wiper switch circuit, and the BCM responds by energizing the wiper on/off relay in the Power Distribution Center (PDC) to operate the front wiper motor momentarily at low speed to provide the front wiper mist mode.

• **Intermittent Front Wipe Mode** - The control knob on the end of the multi-function switch right (wiper) control stalk is rotated to one of five minor intermediate detents to select the desired intermittent front wipe delay interval. The control knob is rotated rearward to increase the delay, or forward to decrease the delay. The multi-function switch provides a resistor multiplexed output to the Body Control Module (BCM) on a front wiper switch circuit, and the BCM responds by energizing the wiper on/off relay in the Power Distribution Center (PDC) to operate the front wiper motor at the selected delay intervals.

• **Intermittent Rear Wipe Mode** - The control ring on the multi-function switch right (wiper) control stalk is rotated to the center detent to select the intermittent rear wiper mode. The multi-function

MULTI-FUNCTION SWITCH (Continued)

switch provides a battery voltage output to the rear wiper motor on a rear wiper intermittent driver circuit to signal the rear wiper motor to operate in the intermittent wipe mode.

- **Rear Washer Mode** - The control ring on the multi-function switch right (wiper) control stalk is rotated to either the full forward or full rearward momentary positions to activate the washer pump in the rear washer mode. The washer pump will continue to operate in the rear washer mode until the control ring is released. The multi-function switch provides a ground output on a washer pump driver circuit, and battery voltage on a washer pump sense circuit to energize the washer pump in the rear washer mode.

DIAGNOSIS AND TESTING

MULTI-FUNCTION SWITCH

WARNING: To avoid personal injury or death, on vehicles equipped with airbags, disable the supplemental restraint system before attempting any steering wheel, steering column, airbag, occupant classification system, seat belt tensioner, impact sensor, or instrument panel component diagnosis or service. Disconnect and isolate the battery negative (ground) cable, then wait two minutes for the system capacitor to discharge before performing further diagnosis or service. This is the only sure way to disable the supplemental restraint system. Failure to take the proper precautions could result in accidental airbag deployment.

(1) Remove the multi-function switch from the steering column. (Refer to 8 - ELECTRICAL/LAMPS/LIGHTING - EXTERIOR/MULTI-FUNCTION SWITCH - REMOVAL).

(2) Disconnect the appropriate wire harness connector from the back of the multi-function switch.

(3) Using an ohmmeter, perform the continuity and resistance tests at the terminals (Fig. 60) in the multi-function switch connector as shown in the Multi-Function Switch Tests table.

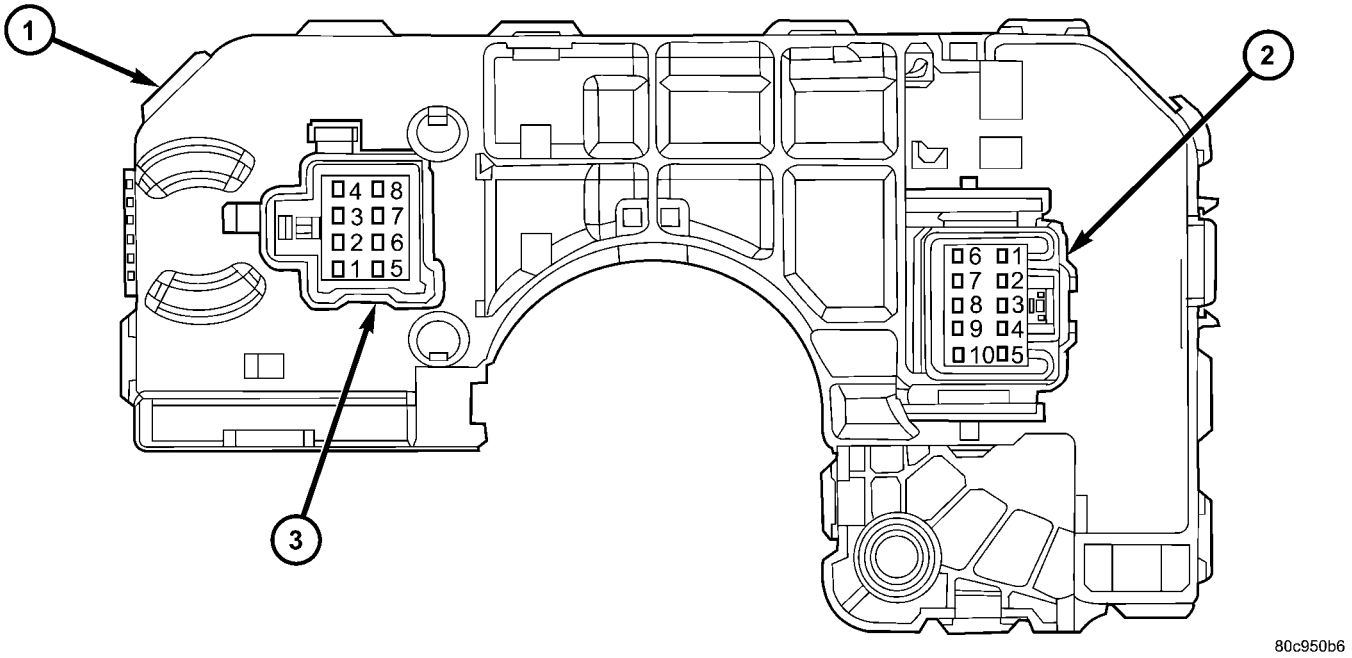

Fig. 60 Multi-Function Switch Connector Receptacle Pin-Out

1 - MULTI-FUNCTION SWITCH
2 - C-1 (LIGHTING) CONNECTOR RECEPTACLE
3 - C-2 (WIPER) CONNECTOR RECEPTACLE

MULTI-FUNCTION SWITCH (Continued)

MULTI-FUNCTION SWITCH TESTS		
EXTERIOR LIGHTING FUNCTIONS		
SWITCH POSITION	**CONNECTOR C-1 PINS**	**RESISTANCE (OHMS) ±10%**
Off	4 & 5	3781
Park Lamps On	4 & 5	911
Headlamp Low Beams On	4 & 5	349
Rear Fog Lamps On	4 & 5	75
Headlamp High Beams On	8 & 9	0 - 1
Front Fog Lamps On	2 & 4	0 - 1
Optical Horn (Flash-to-Pass) On	7 & 8	0 - 1
Turn Signal Neutral	6 & 8, 8 & 10	Infinite (Open)
Turn Signal Left	6 & 8	0 - 1
Turn Signal Right	8 & 10	0 - 1
INTERIOR LIGHTING FUNCTIONS		
SWITCH POSITION	**CONNECTOR C-1 PINS**	**RESISTANCE (OHMS) ±10%**
Off (Courtesy Disable)	1 & 4	63
Dimming 1	1 & 4	200
Dimming 2	1 & 4	557
Dimming 3	1 & 4	914
Dimming 4	1 & 4	1271
Dimming 5	1 & 4	1628
Dimming 6	1 & 4	1985
Parade Mode On	1 & 4	3565
Courtesy On	1 & 4	7885
FRONT WIPER FUNCTIONS		
SWITCH POSITION	**CONNECTOR C-1 & C-2 PINS**	**RESISTANCE (OHMS) ±10%**
Front Wiper Off	C-1 Pin 4 & C-2 Pin 4	4587
Delay 1	C-1 Pin 4 & C-2 Pin 4	1267
Delay 2	C-1 Pin 4 & C-2 Pin 4	792
Delay 3	C-1 Pin 4 & C-2 Pin 4	531
Delay 4	C-1 Pin 4 & C-2 Pin 4	369
Delay 5	C-1 Pin 4 & C-2 Pin 4	262
Front Wiper Low	C-1 Pin 4 & C-2 Pin 4	125
Front Wiper High	C-1 Pin 4 & C-2 Pin 4	38
Front Wiper Mist	C-1 Pin 4 & C-2 Pin 4	125
Front Washer On	C-2 Pins 5 & 7	0 - 1
REAR WIPER FUNCTIONS		
SWITCH POSITION	**CONNECTOR C-2 PINS**	**RESISTANCE (OHMS) ±10%**
Rear Wiper Off	1 & 5, 2 & 5	Infinite (Open)
Rear Wiper Intermittent	2 & 5	0 - 1
Rear Wiper On	1 & 5	0 - 1
Rear Washer On	2 & 5, 3 & 5	0 - 1

MULTI-FUNCTION SWITCH (Continued)

(4) If the switch fails any of the tests, replace the faulty multi-function switch as required.

REMOVAL

WARNING: To avoid personal injury or death, on vehicles equipped with airbags, disable the supplemental restraint system before attempting any steering wheel, steering column, airbag, occupant classification system, seat belt tensioner, impact sensor, or instrument panel component diagnosis or service. Disconnect and isolate the battery negative (ground) cable, then wait two minutes for the system capacitor to discharge before performing further diagnosis or service. This is the only sure way to disable the supplemental restraint system. Failure to take the proper precautions could result in accidental airbag deployment.

(1) Disconnect and isolate the battery negative cable.

(2) If the vehicle is equipped with the optional tilt steering column, move the tilt steering column to the fully lowered position and leave the tilt release lever in the released (down) position.

(3) From below the steering column, remove the two screws that secure the lower column shroud to the upper shroud (Fig. 61).

(4) Using hand pressure, press inward on both sides of the upper shroud above the parting line of the lower shroud to release the snap features that secure the two shroud halves to each other.

(5) Remove both shroud halves from the steering column.

(6) Disconnect the two wire harness connectors from the back of the multi-function switch housing.

(7) Remove the multi-function switch from the steering column lock housing by carefully rocking the switch and pulling the switch housing upward far enough to disengage its alignment posts and locator tabs from the lock housing.

INSTALLATION

WARNING: To avoid personal injury or death, on vehicles equipped with airbags, disable the supplemental restraint system before attempting any steering wheel, steering column, airbag, occupant classification system, seat belt tensioner, impact sensor, or instrument panel component diagnosis or service. Disconnect and isolate the battery negative (ground) cable, then wait two minutes for the system capacitor to discharge before performing further diagnosis or service. This is the only sure way to disable the supplemental restraint system. Failure to take the proper precautions could result in accidental airbag deployment.

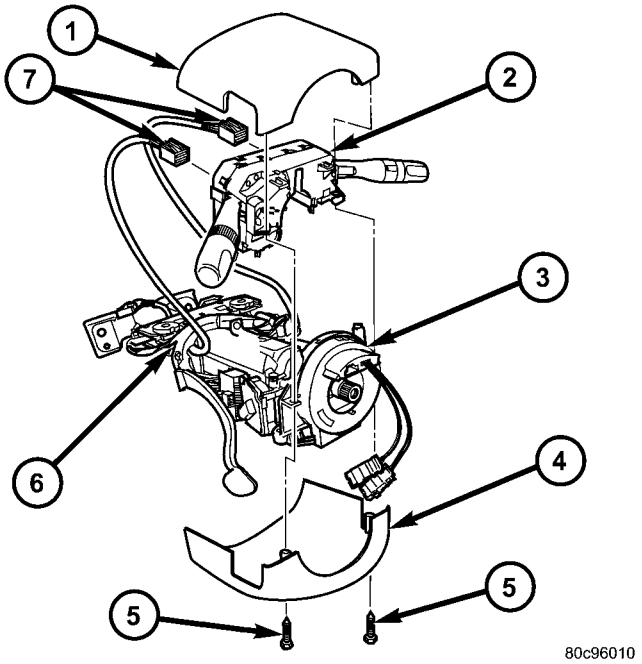

Fig. 61 Multi-Function Switch Remove/Install

1 - UPPER SHROUD
2 - MULTI-FUNCTION SWITCH
3 - CLOCKSPRING
4 - LOWER SHROUD
5 - SCREW (2)
6 - STEERING COLUMN
7 - WIRE HARNESS CONNECTOR (2)

CAUTION: Before attempting to install the multi-function switch, be certain that the left control stalk is in the neutral turn signal position and the turn signal cancel actuator is in the retracted (neutral) position.

(1) Position the multi-function switch to the steering column.

(2) Reconnect the two wire harness connectors to the connector receptacles on the back of the switch housing (Fig. 61).

(3) Position the multi-function switch onto the steering column lock housing. Be certain that the switch alignment posts and locator tabs are fully seated on the lock housing.

(4) Position the upper and lower shroud halves onto the steering column.

(5) Align the snap features on the lower shroud with the receptacles in the upper shroud and apply hand pressure to snap them together.

(6) Install and tighten the two screws that secure the lower shroud to the upper shroud. Tighten the screws to 2 N·m (20 in. lbs.).

MULTI-FUNCTION SWITCH (Continued)

(7) If the vehicle is equipped with the optional tilt steering column, move the tilt steering column back to the fully raised position and move the tilt release lever into the locked (up) position.

(8) Reconnect the battery negative cable.

PARK BRAKE SWITCH

DESCRIPTION

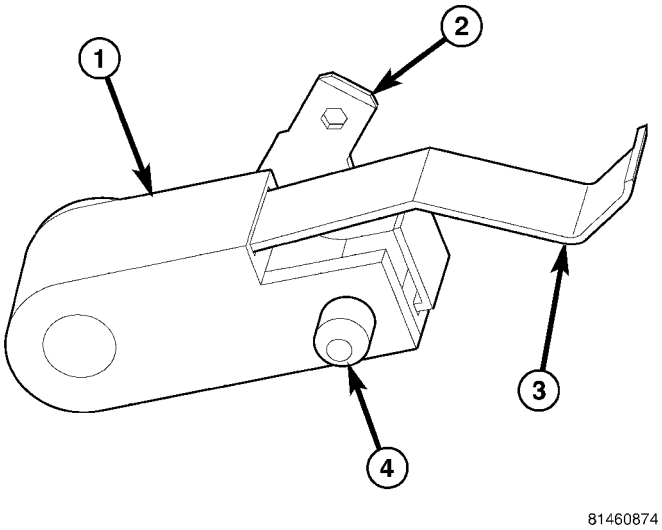

Fig. 62 Park Brake Switch

1 - SWITCH
2 - TERMINAL
3 - CONTACT
4 - TAB

The park brake switch (Fig. 62) is located on the park brake lever mechanism on the floor panel transmission tunnel below the center floor console. This switch includes a spade-type output terminal that connects the switch to the vehicle electrical system through a dedicated take out and connector of the body wire harness. The output terminal is integral to the stationary contact within a molded plastic insulator. A locating tab on the insulator engages a slot in the park brake lever mechanism for positive switch location. External to the insulator is a movable leaf contact with an integral grounding lug on one end and an integral actuating lever and follower on the opposite end. The switch is secured to and grounded by a single screw to the park brake lever mechanism. The park brake switch cannot be adjusted or repaired and, if faulty or damaged, it must be replaced.

OPERATION

The park brake switch is a normally closed, mechanically actuated leaf contact switch that is operated by the park brake lever mechanism. The switch is grounded through its mounting to the park brake lever mechanism and provides a ground input to the ElectroMechanical Instrument Cluster (EMIC) on a park brake switch sense circuit whenever the park brake is applied, and opens this circuit whenever the park brake is released. The park brake switch sense input to the EMIC is used for control of the brake indicator and may also be used as a logic input for other electronic features in the vehicle.

The park brake switch can be diagnosed using conventional diagnostic tools and methods. However, proper testing of the EMIC processing of the park brake switch sense input requires the use of a diagnostic scan tool. Refer to the appropriate diagnostic information.

DIAGNOSIS AND TESTING

PARK BRAKE SWITCH

WARNING: To avoid personal injury or death, on vehicles equipped with airbags, disable the supplemental restraint system before attempting any steering wheel, steering column, airbag, occupant classification system, seat belt tensioner, impact sensor, or instrument panel component diagnosis or service. Disconnect and isolate the battery negative (ground) cable, then wait two minutes for the system capacitor to discharge before performing further diagnosis or service. This is the only sure way to disable the supplemental restraint system. Failure to take the proper precautions could result in accidental airbag deployment.

NOTE: If the brake indicator stays on with the ignition switch in the On position and the park brake released, or comes on while driving, the brake system must be diagnosed and repaired prior to performing the following tests. (Refer to 5 - BRAKES - DIAGNOSIS AND TESTING). If no brake system problem is found, the following procedures will help to locate a shorted or open park brake switch sense circuit, or a faulty park brake switch.

INDICATOR ILLUMINATES DURING BULB TEST, BUT DOES NOT WHEN PARK BRAKE APPLIED

(1) Disconnect and isolate the battery negative cable. Disconnect the body wire harness connector for the park brake switch from the switch terminal. Apply the parking brake. Check for continuity between the park brake switch terminal and a good ground. There should be continuity. If OK, go to Step 2. If not OK, replace the faulty park brake switch.

PARK BRAKE SWITCH (Continued)

(2) Disconnect the instrument panel wire harness connector for the instrument cluster from the cluster connector receptacle. Check for continuity between the park brake switch sense circuit cavities of the body wire harness connector for the park brake switch and the instrument panel wire harness connector for the instrument cluster. There should be continuity. If not OK, repair the open park brake switch sense circuit between the park brake switch and the instrument cluster as required.

INDICATOR REMAINS ILLUMINATED - BRAKE SYSTEM CHECKS OK

(1) Disconnect and isolate the battery negative cable. Disconnect the body wire harness connector for the park brake switch from the switch terminal. Check for continuity between the terminal of the park brake switch and a good ground. There should be no continuity with the park brake released, and continuity with the park brake applied. If OK, go to Step 2. If not OK, replace the faulty park brake switch.

(2) Disconnect the instrument panel wire harness connector for the instrument cluster from the cluster connector receptacle. Check for continuity between the park brake switch sense circuit cavity of the body wire harness connector for the park brake switch and a good ground. There should be no continuity. If not OK, repair the shorted park brake switch sense circuit between the park brake switch and the instrument cluster as required.

REMOVAL

WARNING: To avoid personal injury or death, on vehicles equipped with airbags, disable the supplemental restraint system before attempting any steering wheel, steering column, airbag, occupant classification system, seat belt tensioner, impact sensor, or instrument panel component diagnosis or service. Disconnect and isolate the battery negative (ground) cable, then wait two minutes for the system capacitor to discharge before performing further diagnosis or service. This is the only sure way to disable the supplemental restraint system. Failure to take the proper precautions could result in accidental airbag deployment.

(1) Disconnect and isolate the battery negative cable.

(2) Remove the console from the floor panel transmission tunnel. (Refer to 23 - BODY/INTERIOR/FLOOR CONSOLE - REMOVAL).

(3) Apply the parking brake mechanism (Fig. 63).

(4) Disconnect the body wire harness connector from the terminal of the park brake switch located on the left side of the park brake lever mechanism.

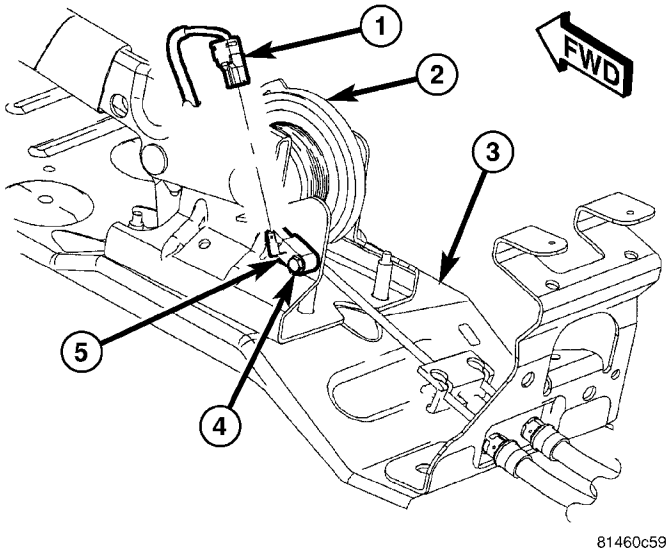

Fig. 63 Park Brake Switch Remove/Install

1 - CONNECTOR
2 - MECHANISM
3 - SLED
4 - SCREW
5 - SWITCH

(5) Remove the screw that secures the park brake switch to the park brake lever mechanism.

(6) Remove the switch from the park brake lever mechanism.

INSTALLATION

WARNING: To avoid personal injury or death, on vehicles equipped with airbags, disable the supplemental restraint system before attempting any steering wheel, steering column, airbag, occupant classification system, seat belt tensioner, impact sensor, or instrument panel component diagnosis or service. Disconnect and isolate the battery negative (ground) cable, then wait two minutes for the system capacitor to discharge before performing further diagnosis or service. This is the only sure way to disable the supplemental restraint system. Failure to take the proper precautions could result in accidental airbag deployment.

(1) Position park brake switch onto the left side of the park brake lever mechanism (Fig. 63). Be certain to engage the locating pin on the back of the switch insulator into the locating slot in the lever mechanism bracket.

(2) Install and tighten the screw that secures the park brake switch to the park brake lever mechanism. Tighten the screw to 3 N·m (24 in. lbs.).

(3) Reconnect the body wire harness connector to the terminal of the park brake switch.

PARK BRAKE SWITCH (Continued)

(4) Reinstall the console onto the floor panel transmission tunnel. (Refer to 23 - BODY/INTERIOR/ FLOOR CONSOLE - INSTALLATION).

(5) Reconnect the battery negative cable.

(6) Turn the ignition switch to the On position and check for proper brake indicator operation with the parking brake applied, then release the parking brake and check that the brake indicator extinguishes.

PARK LAMP RELAY

DESCRIPTION

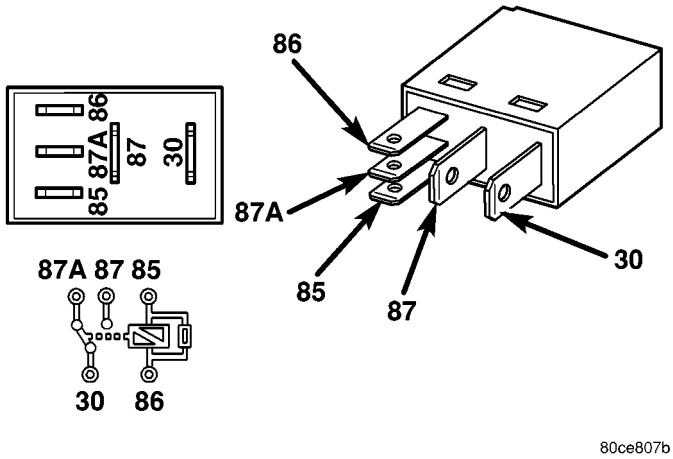

Fig. 64 ISO Micro Relay

30 - COMMON FEED
85 - COIL GROUND
86 - COIL BATTERY
87 - NORMALLY OPEN
87A - NORMALLY CLOSED

The park lamp relay is a conventional International Standards Organization (ISO) micro relay (Fig. 64). Relays conforming to the ISO specifications have common physical dimensions, current capacities, terminal patterns, and terminal functions. This relay is contained within a small, rectangular, molded plastic housing and is connected to all of the required inputs and outputs through five integral male spade-type terminals that extend from the relay base plate.

The park lamp relay is located in the Junction Block (JB) on the driver side outboard end bracket of the instrument panel. Refer to Junction Block in the wiring section of this service information for specific relay cavity assignment information. The park lamp relay cannot be adjusted or repaired and, if faulty or damaged, the unit must be replaced.

OPERATION

The park lamp relay is an electromechanical switch that uses a low current input from the Body Control Module (BCM) to control a high current output to the park lamps. Within the relay are an electromagnetic coil, a movable contact and two fixed contact points. A resistor is connected in parallel with the coil, and helps to dissipate voltage spikes and electromagnetic interference that can be generated as the field of the relay coil collapses.

The movable common supply contact point is held against the fixed normally closed contact point by spring pressure. When the relay coil is energized, an electromagnetic field is produced by the coil windings. This field draws the movable contact away from the normally closed contact, and holds it against the normally open contact. When the relay coil is de-energized, spring pressure returns the movable contact back against the normally closed contact.

The inputs and outputs of the park lamp relay include:

- **Common Supply Terminal (30)** - The common feed terminal is connected to the park lamps through the park lamp relay output circuit. This terminal provides ground to the park lamps when the relay is de-energized, and battery voltage to the park lamps whenever the relay is energized.
- **Coil Ground Terminal (85)** - The coil ground terminal is connected to a control output of the BCM through a park lamp relay control circuit. The BCM controls park lamp operation by controlling a ground path through this circuit.
- **Coil Battery Terminal (86)** - The coil battery terminal is connected to a fused B(+) circuit at all times.
- **Normally Open Terminal (87)** - The normally open terminal is connected to a fused B(+) circuit at all times.
- **Normally Closed Terminal (87A)** - The normally closed terminal is connected to ground at all times through a ground stud on the driver side instrument panel end bracket near the Junction Block (JB).

The park lamp relay can be diagnosed using conventional diagnostic tools and methods. Refer to the appropriate wiring information.

PARK/TURN SIGNAL LAMP

REMOVAL

BULB

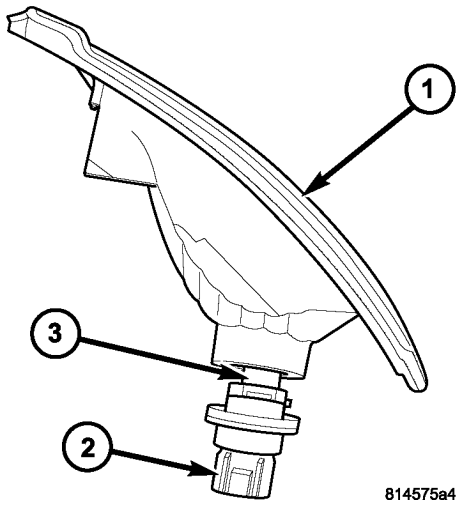

Fig. 65 Front Park/Turn Signal Lamp Bulb Remove/ Install

1 - LAMP
2 - SOCKET
3 - BULB

(1) Disconnect and isolate the battery negative cable.

(2) Remove the front park/turn signal lamp unit from the front fascia. (Refer to 8 - ELECTRICAL/ LAMPS/LIGHTING - EXTERIOR/PARK/TURN SIGNAL LAMP UNIT - REMOVAL).

(3) Firmly grasp the park/turn signal bulb socket on the back of the front lamp unit housing and rotate it counterclockwise about 30 degrees to unlock it (Fig. 65).

(4) Pull the socket and bulb straight out from the keyed opening in the housing.

(5) Pull the base of the bulb straight out of the socket.

LAMP

(1) Disconnect and isolate the battery negative cable.

(2) Remove the screw that secures the inboard side of the front park/turn signal lamp unit to the front bumper fascia (Fig. 66).

(3) Pull the inboard side of the lamp away from the fascia far enough to disengage the tab that secures the outboard side of the lamp from the slot in the front bumper fascia (Fig. 67).

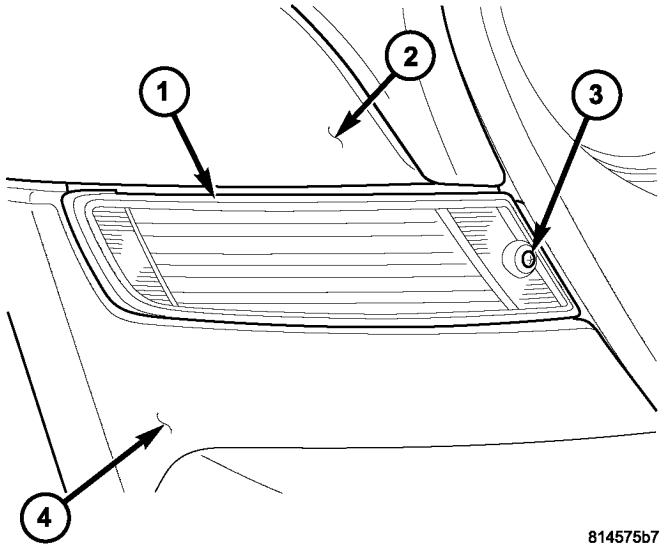

Fig. 66 Front Park/Turn Signal Lamp Unit Remove/ Install

1 - LAMP
2 - FENDER FLARE
3 - SCREW
4 - FASCIA

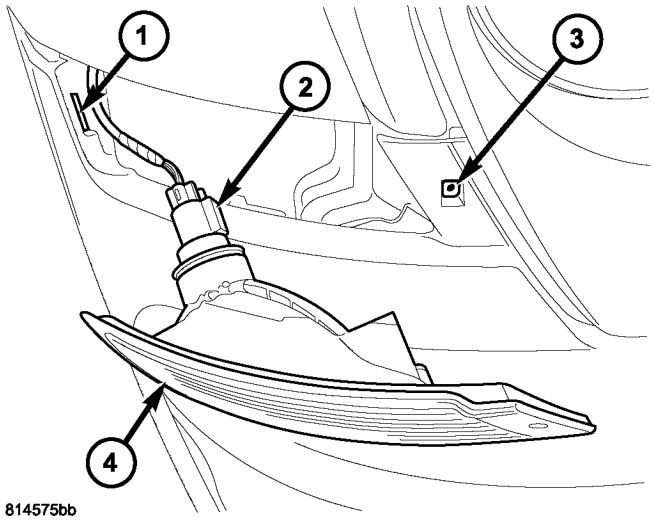

Fig. 67 Front Park/Turn Signal Lamp Connection

1 - SLOT
2 - CONNECTOR
3 - PLASTIC NUT
4 - LAMP

(4) Disengage the lock feature and disconnect the wire harness connector from the lamp socket.

(5) Remove the front park/turn signal lamp unit from the vehicle.

PARK/TURN SIGNAL LAMP (Continued)

INSTALLATION

BULB

CAUTION: Always use the correct bulb size and type for replacement. An incorrect bulb size or type may overheat and cause damage to the lamp, the socket and/or the lamp wiring.

(1) Align the base of the bulb with the park/turn signal bulb socket (Fig. 65).

(2) Push the bulb straight into the socket until the base is firmly seated.

(3) Align the socket and bulb with the keyed opening on the back of the front park/turn signal lamp unit housing.

(4) Insert the socket and bulb into the housing until the socket is firmly seated.

(5) Rotate the socket clockwise about 30 degrees to lock it into place.

(6) Reinstall the front park/turn signal lamp unit onto the front fascia. (Refer to 8 - ELECTRICAL/LAMPS/LIGHTING - EXTERIOR/PARK/TURN SIGNAL LAMP UNIT - INSTALLATION).

(7) Reconnect the battery negative cable.

LAMP

(1) Check to be certain that the plastic nut is in good condition and properly installed in the inboard side of the front park/turn signal lamp mounting hole in the front bumper fascia (Fig. 67).

(2) Position the lamp unit near the mounting hole in the fascia.

(3) Reconnect the wire harness connector to the lamp socket and engage the lock feature.

(4) Align and engage the tab on the outboard side of the lamp housing with the slot in the fascia mounting hole.

(5) Position the inboard side of the lamp into the fascia mounting hole (Fig. 66).

(6) Install and tighten the screw that secures the inboard side of the lamp to the fascia. Tighten the screw to 2 N·m (20 in. lbs.).

(7) Reconnect the battery negative cable.

REAR LAMP UNIT

REMOVAL

BULB

NOTE: The rear lamp unit may contain up to four bulbs, depending upon the market for which the vehicle was manufactured. The service procedures for each bulb are the same, only the bulb sizes and types may differ.

(1) Disconnect and isolate the battery negative cable.

(2) Remove the rear lamp unit from the end of the quarter panel. (Refer to 8 - ELECTRICAL/LAMPS/LIGHTING - EXTERIOR/REAR LAMP UNIT - REMOVAL).

(3) Firmly grasp the socket on the socket plate on the back of the rear lamp unit housing for the bulb that is being removed and rotate it counterclockwise about 30 degrees to unlock it (Fig. 68).

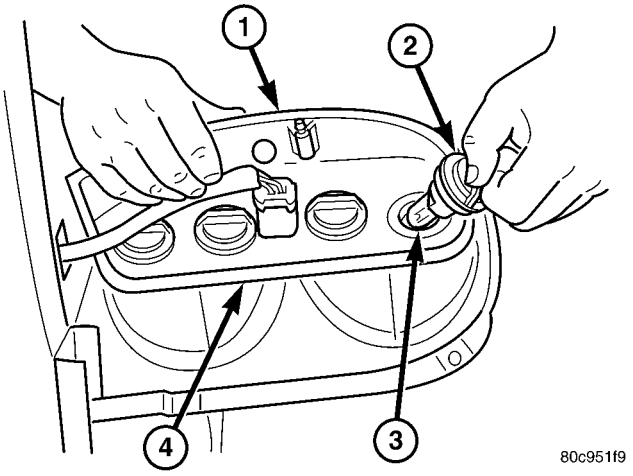

Fig. 68 Rear Lamp Bulb Remove/Install

1 - REAR LAMP HOUSING
2 - SOCKET/BULB HOLDER
3 - BULB
4 - SOCKET PLATE

(4) Pull the socket and bulb straight out of the keyed opening in the socket plate.

(5) Pull the base of the bulb straight out of the rear lamp socket.

LAMP

(1) Disconnect and isolate the battery negative cable.

(2) Open the tailgate to access and remove the two screws that secure the rear lamp unit to the two plastic nuts in the side jamb of the tailgate opening (Fig. 69).

(3) Pull the outboard side of the rear lamp unit rearward far enough to unsnap the two ball studs on the outboard side of the lamp housing from the two plastic grommets in the quarter panel.

(4) Disconnect the wire harness connector from the lamp socket plate connector.

(5) Remove the lamp from the quarter panel.

(6) Remove the two plastic grommets from the quarter panel and discard.

REAR LAMP UNIT (Continued)

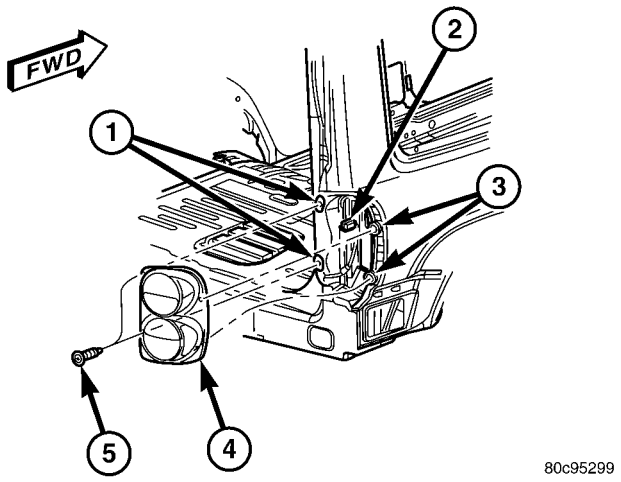

Fig. 69 Rear Lamp Unit Remove/Install

1 - PLASTIC NUT (2)
2 - WIRE HARNESS CONNECTOR
3 - PLASTIC GROMMET (2)
4 - REAR LAMP UNIT
5 - SCREW (2)

INSTALLATION

BULB

CAUTION: Always use the correct bulb size and type for replacement. An incorrect bulb size or type may overheat and cause damage to the lamp, the socket and/or the lamp wiring.

NOTE: The rear lamp unit may contain up to four bulbs, depending upon the market for which the vehicle was manufactured. The service procedures for each bulb are the same, only the bulb sizes and types may differ.

(1) Align the base of the bulb with the rear lamp socket.

(2) Push the bulb straight into the socket until the base is firmly seated.

(3) Align the socket and bulb with the keyed opening in the socket plate on the back of the rear lamp unit housing (Fig. 68).

(4) Insert the socket and bulb straight into the socket plate until the socket is firmly seated.

(5) Rotate the socket clockwise about 30 degrees to lock it into place.

(6) Reinstall the rear lamp unit onto the end of the quarter panel. (Refer to 8 - ELECTRICAL/LAMPS/LIGHTING - EXTERIOR/REAR LAMP UNIT - INSTALLATION).

(7) Reconnect the battery negative cable.

LAMP

(1) Install two new plastic grommets into the quarter panel (Fig. 69).

(2) Position the rear lamp unit to the quarter panel.

(3) Reconnect the wire harness connector to the lamp socket plate connector.

(4) Align the two ball studs on the outboard side of the rear lamp housing with the two plastic grommets in the quarter panel.

(5) Using hand pressure, push firmly and evenly on the outboard side of the lamp until the two ball studs snap into the plastic grommets.

(6) Install and tighten the two screws that secure the inboard side of the lamp housing to the plastic nuts in the side jamb of the tailgate opening. Tighten the screws to 2 N·m (20 in. lbs.).

(7) Reconnect the battery negative cable.

REPEATER LAMP

REMOVAL

BULB

NOTE: Side repeater lamps are used only on vehicles manufactured for certain markets where these lamps are required.

(1) Disconnect and isolate the battery negative cable.

(2) Remove the repeater lamp unit from the front fender panel. (Refer to 8 - ELECTRICAL/LAMPS/LIGHTING - EXTERIOR/REPEATER LAMP UNIT - REMOVAL).

(3) Rotate the repeater lamp socket in the lamp lens counterclockwise about 30 degrees to unlock it (Fig. 70).

(4) Pull the socket and bulb straight out of the keyed opening in the lamp lens.

(5) Pull the base of the bulb straight out of the lamp socket.

LAMP

NOTE: Side repeater lamps are used only on vehicles manufactured for certain markets where these lamps are required.

(1) Disconnect and isolate the battery negative cable.

(2) Using a trim stick or another suitable wide flat-bladed tool, carefully pry at the clearance notch in the lower edge of the repeater lamp lens to disen-

REPEATER LAMP (Continued)

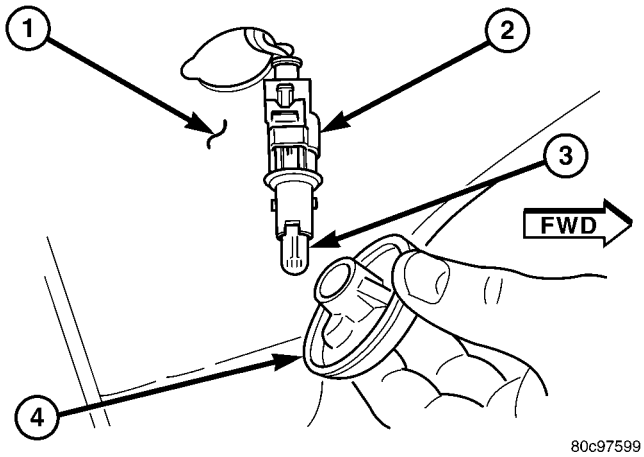

Fig. 70 Repeater Lamp Bulb Remove/Install

1 - FRONT FENDER
2 - SOCKET
3 - BULB
4 - LENS

gage the snap features of the lens from the mounting hole in the front fender panel (Fig. 71).

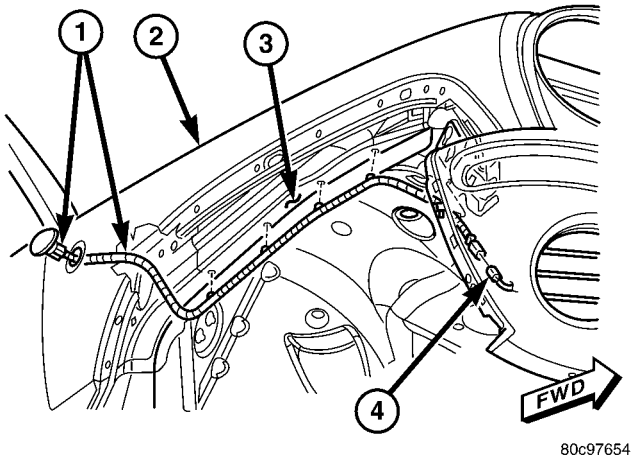

Fig. 71 Repeater Lamp Unit Remove/Install

1 - REPEATER LAMP UNIT
2 - FRONT FENDER PANEL
3 - INNER FENDER
4 - FRONT FASCIA WIRE HARNESS

(3) Pull the lamp unit out from the front fender panel far enough to access and disconnect the wire harness connector from the lamp socket.

(4) Remove the lamp unit from the front fender panel.

INSTALLATION

BULB

CAUTION: Always use the correct bulb size and type for replacement. An incorrect bulb size or type may overheat and cause damage to the lamp, the socket and/or the lamp wiring.

NOTE: Side repeater lamps are used only on vehicles manufactured for certain markets where these lamps are required.

(1) Align the base of the bulb with the repeater lamp socket.

(2) Push the bulb straight into the socket until the base is firmly seated.

(3) Align the socket and bulb with the keyed opening on the back of the repeater lamp lens (Fig. 70).

(4) Insert the socket and bulb straight into the lens until the socket is firmly seated

(5) Rotate the socket clockwise in the lens about 30 degrees to lock it into place.

(6) Reinstall the repeater lamp unit onto the front fender panel. (Refer to 8 - ELECTRICAL/LAMPS/LIGHTING - EXTERIOR/REPEATER LAMP UNIT - INSTALLATION).

(7) Reconnect the battery negative cable.

LAMP

NOTE: Side repeater lamps are used only on vehicles manufactured for certain markets where these lamps are required.

(1) Position the repeater lamp unit to the front fender panel (Fig. 71).

(2) Reconnect the wire harness connector to the lamp socket.

(3) Position the lamp unit into the mounting hole in the front fender panel. Be certain that the clearance notch on the edge of the lamp lens is oriented towards the bottom.

(4) Using hand pressure, press on the lamp lens firmly and evenly until the snap features of the lamp are fully engaged in the mounting hole of the front fender panel.

(5) Reconnect the battery negative cable.

TRAILER TOW CONNECTOR

REMOVAL

(1) Disconnect and isolate the battery negative cable.

TRAILER TOW CONNECTOR (Continued)

(2) Remove the four screws that secure the trailer tow connector to the bracket on the trailer hitch receiver (Fig. 72).

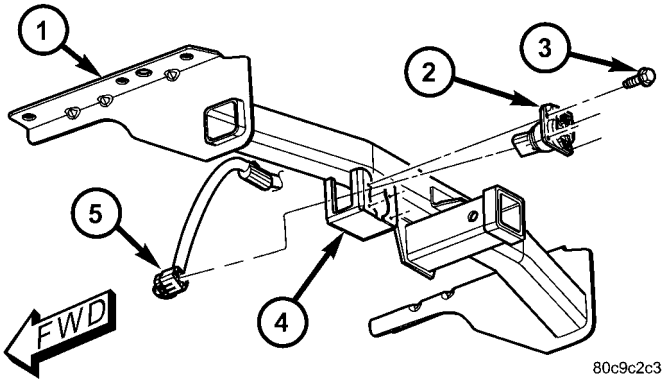

Fig. 72 Trailer Tow Connector Remove/Install

1 - HITCH RECEIVER
2 - 7-WAY TRAILER TOW CONNECTOR
3 - SCREW (4)
4 - BRACKET
5 - WIRE HARNESS CONNECTOR

(3) Pull the trailer tow connector rearward from the hitch receiver bracket far enough to access and disconnect the rear body wire harness connector.

(4) Remove the trailer tow connector from the trailer hitch receiver.

INSTALLATION

(1) Position the trailer tow connector to the trailer hitch receiver (Fig. 72).

(2) Reconnect the rear body wire harness connector to the trailer tow connector.

(3) Position the trailer tow connector into the bracket on the trailer hitch receiver.

(4) Install and tighten the four screws that secure the trailer tow connector to the hitch receiver bracket. Tighten the screws to 4 N·m (35 in. lbs.).

(5) Reconnect the battery negative cable.

TRAILER TOW RELAY

DESCRIPTION

Vehicles equipped with an optional factory-installed trailer towing package have four trailer tow relays (Fig. 73). The trailer tow relays are conventional International Standards Organization (ISO) micro relays. Relays conforming to the ISO specifications have common physical dimensions, current capacities, terminal patterns, and terminal functions. Each relay is contained within a small, rectangular, molded plastic housing and is connected to all of the required inputs and outputs through five integral male spade-type terminals that extend from the relay base plate.

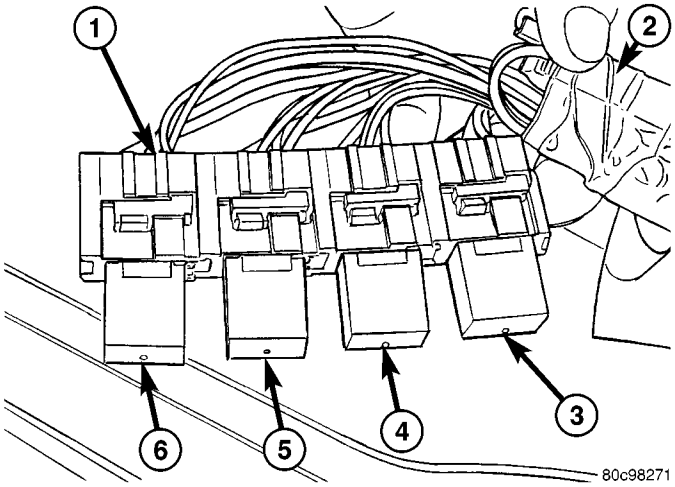

Fig. 73 Trailer Tow Relays

1 - RELAY CONNECTOR BANK
2 - REAR BODY WIRE HARNESS
3 - LEFT TURN RELAY
4 - RIGHT TURN RELAY
5 - BRAKE LAMP RELAY
6 - FUSED IGNITION SWITCH OUTPUT (RUN) RELAY

The trailer tow relays include one each for brake lamps, right turn lamps, left turn lamps and a fused ignition switch output (run) circuit which are provided for the trailer through the rear body wiring and connectors. The relays are located in a connector bank above the right rear wheelhouse and behind the quarter trim panel. The connector bank and relays are wrapped within a foam rubber isolator envelope for sound deadening and anti-rattle protection.

Refer to Trailer Tow in the wiring information for specific relay cavity assignment information. A trailer tow relay cannot be adjusted or repaired and, if faulty or damaged, the unit must be replaced.

OPERATION

The trailer tow relays are electromechanical switches that each use a low current input from the circuit that they isolate to control a high current output to the trailer brake and turn signal lamps, and a trailer accessory circuit. Within each relay are an electromagnetic coil, a movable contact and two fixed contact points. A resistor is connected in parallel with the coil, and helps to dissipate voltage spikes and electromagnetic interference that can be generated as the field of the relay coil collapses.

The movable common supply contact point is held against the fixed normally closed contact point by spring pressure. When the relay coil is energized, an electromagnetic field is produced by the coil windings. This field draws the movable contact away from the normally closed contact, and holds it against the normally open contact. When the relay coil is de-en-

TRAILER TOW RELAY (Continued)

ergized, spring pressure returns the movable contact back against the normally closed contact.

The inputs and outputs of the trailer tow relays include:

- **Common Supply Terminal (30)** - The common feed terminal is connected to the circuit connected to the normally open terminal (87) when the relay is energized, or to the circuit connected to the normally closed terminal (87A) when the relay is de-energized.
- **Coil Ground Terminal (85)** - The coil ground terminal is connected to a ground circuit at all times.
- **Coil Battery Terminal (86)** - The coil battery terminal is connected to the circuit that controls the relay output. When battery voltage is applied to this terminal, the relay is energized.
- **Normally Open Terminal (87)** - The normally open terminal is connected to the circuit connected to the common supply terminal (30) whenever the relay is energized.
- **Normally Closed Terminal (87A)** - The normally closed terminal is connected to the circuit connected to the common supply terminal (30) whenever the relay is de-energized.

The trailer tow relays can be diagnosed using conventional diagnostic tools and methods. Refer to the appropriate wiring information.

REMOVAL

WARNING: To avoid personal injury or death, on vehicles equipped with airbags, disable the supplemental restraint system before attempting any steering wheel, steering column, airbag, occupant classification system, seat belt tensioner, impact sensor, or instrument panel component diagnosis or service. Disconnect and isolate the battery negative (ground) cable, then wait two minutes for the system capacitor to discharge before performing further diagnosis or service. This is the only sure way to disable the supplemental restraint system. Failure to take the proper precautions could result in accidental airbag deployment.

CAUTION: Be certain any removed trailer tow relay is replaced with the same relay size and type that was removed.

NOTE: The trailer tow relay bank contains four relays. The service procedures for each relay are the same.

(1) Disconnect and isolate the battery negative cable.

(2) Remove the trim from the right side quarter inner panel. (Refer to 23 - BODY/INTERIOR/QUARTER TRIM PANEL - REMOVAL).

(3) Reach through the access hole in the quarter inner panel behind the right rear wheelhouse to locate and retrieve the trailer tow relay connector bank, which is wrapped within a foam rubber envelope and placed on the top of the right rear wheelhouse between the quarter inner and outer panels (Fig. 74).

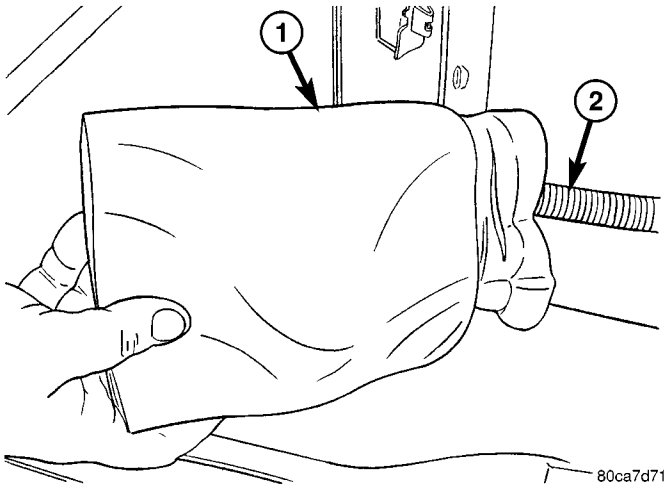

Fig. 74 Trailer Tow Relay Wrap

1 - FOAM WRAP
2 - REAR BODY WIRE HARNESS

CAUTION: Use proper precautions to protect your skin and the rear body wire harness from cuts or scrapes caused by contact with the sharp edges of the quarter inner panel sheet metal while servicing the trailer tow relay connector bank.

(4) Pull the trailer tow relay connector bank into the cargo area far enough to access the relays for service.

(5) Carefully remove the trailer tow relay connector bank from the foam wrap.

(6) Remove the appropriate relay by grasping it firmly and pulling it straight out from the connector bank (Fig. 75).

TRAILER TOW RELAY (Continued)

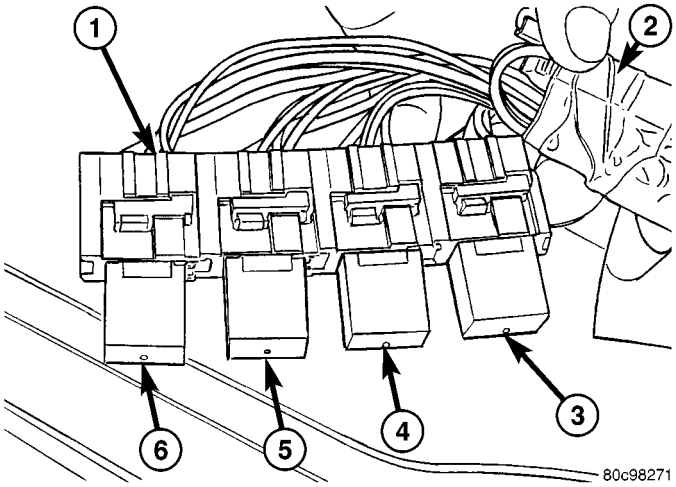

Fig. 75 Trailer Tow Relay Remove/Install

1 - RELAY CONNECTOR BANK
2 - REAR BODY WIRE HARNESS
3 - LEFT TURN RELAY
4 - RIGHT TURN RELAY
5 - BRAKE LAMP RELAY
6 - FUSED IGNITION SWITCH OUTPUT (RUN) RELAY

INSTALLATION

WARNING: To avoid personal injury or death, on vehicles equipped with airbags, disable the supplemental restraint system before attempting any steering wheel, steering column, airbag, occupant classification system, seat belt tensioner, impact sensor, or instrument panel component diagnosis or service. Disconnect and isolate the battery negative (ground) cable, then wait two minutes for the system capacitor to discharge before performing further diagnosis or service. This is the only sure way to disable the supplemental restraint system. Failure to take the proper precautions could result in accidental airbag deployment.

CAUTION: Be certain any removed trailer tow relay is replaced with the same relay size and type that was removed.

NOTE: The trailer tow relay bank contains four relays. The service procedures for each relay are the same.

(1) Position the trailer tow relay to the appropriate connector in the connector bank (Fig. 75).

(2) Align the relay terminals with the receptacles in the connector.

(3) Push firmly and evenly on the top of the relay until the terminals are fully seated in the connector.

(4) Carefully restore the foam wrap around the trailer tow relay connector bank (Fig. 74).

CAUTION: Use proper precautions to protect your skin and the rear body wire harness from cuts or scrapes caused by contact with the sharp edges of the quarter inner panel sheet metal while servicing the trailer tow relay connector bank.

(5) Reach through the access hole in the quarter inner panel behind the right rear wheelhouse to place the relay connector bank on the top of the right rear wheelhouse between the quarter inner and outer panels.

(6) Reinstall the trim onto the right side quarter inner panel. (Refer to 23 - BODY/INTERIOR/QUARTER TRIM PANEL - INSTALLATION).

(7) Reconnect the battery negative cable.

TRAILER TOW WIRING

DESCRIPTION

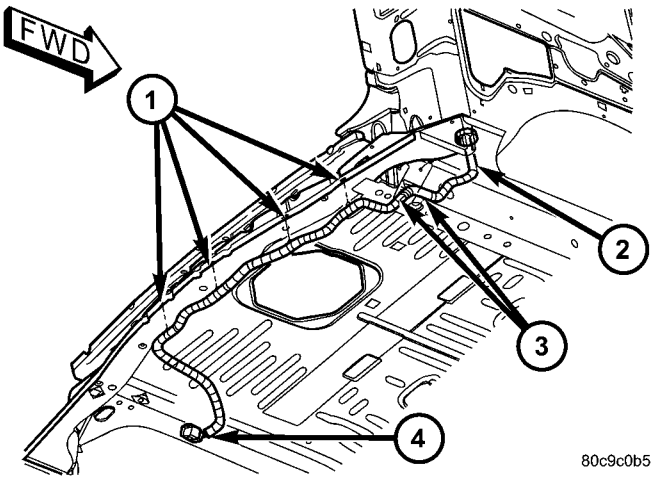

Fig. 76 Trailer Tow Wiring

1 - RETAINER CLIP (4)
2 - REAR BODY HARNESS (TRAILER TOW TAKE OUT)
3 - RETAINER CLIP (2)
4 - WIRE HARNESS CONNECTOR

Vehicles equipped with an optional factory-installed trailer towing package have a rear body wire harness that includes a trailer tow wiring take out that connects to a heavy duty, sealed, 7-pin trailer tow connector located on a bracket on the trailer hitch receiver (Fig. 76). This harness includes a second take out with a trailer tow relay connector bank and the four trailer tow relays that isolate the right turn signal, left turn signal, and brake lamp circuits of the vehicle from the electrical system of the trailer. The fourth relay in the connector bank provides a fused ignition switch output (run) source of battery voltage to the trailer tow connector through a trailer tow relay output circuit. The package also includes an adapter harness (stored beneath the left rear seat

TRAILER TOW WIRING (Continued)

cushion of the vehicle when it is shipped from the factory) that adapts the 7-pin trailer tow connector to a standard, light-duty, 4-pin trailer tow connector. Refer to the appropriate wiring information.

TURN SIGNAL CANCEL CAM

DESCRIPTION

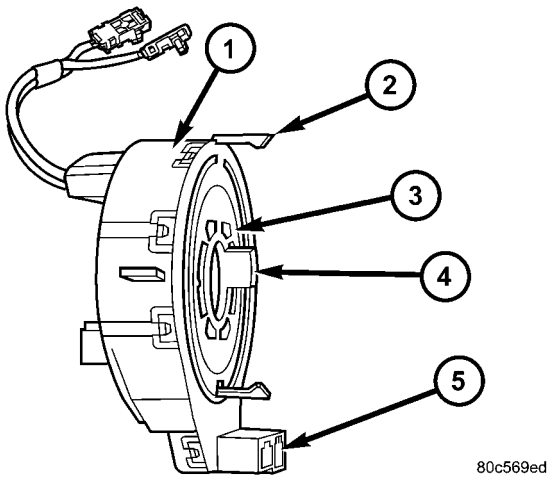

Fig. 77 Clockspring

1 - CASE
2 - LATCH (2)
3 - ROTOR
4 - CANCEL CAM
5 - LOWER CONNECTOR RECEPTACLE (2)

The turn signal cancel cam is concealed within the steering column (Fig. 77). The turn signal cancel cam consists of a single lobe that is integral to the lower hub of the clockspring rotor. The clockspring mechanism provides turn signal cancellation as well as a constant electrical connection between the horn switch, driver airbag, speed control switches, and remote radio switches on the steering wheel and the instrument panel wire harness on the steering column. The housing of the clockspring is secured to the lock housing near the top of the steering column and remains stationary. The rotor of the clockspring, including the turn signal cancel cam lobe rotates with the steering wheel.

The turn signal cancel cam is serviced as a unit with the clockspring and cannot be repaired. If faulty or damaged, the entire clockspring unit must be replaced. (Refer to 8 - ELECTRICAL/RESTRAINTS/ CLOCKSPRING - REMOVAL).

OPERATION

When the multi-function switch control stalk is moved to a latched turn signal position, a turn signal cancel actuator is extended from the inside surface of the switch housing toward the turn signal cancel cam. As the steering wheel is rotated to complete the turn, the cam lobe will contact the actuator, automatically cancelling the turn signal event and releasing the latched multi-function switch control stalk to the neutral position.

LAMPS/LIGHTING - INTERIOR

TABLE OF CONTENTS

page

LAMPS/LIGHTING - INTERIOR
DESCRIPTION 73
OPERATION 75
WARNINGS - LAMPS/LIGHTING - INTERIOR . . 76
DIAGNOSIS AND TESTING
LAMPS/LIGHTING - INTERIOR 76
SPECIFICATIONS
LAMPS/LIGHTING - INTERIOR 79
AJAR SWITCH
DESCRIPTION
DOOR 79
FLIP-UP GLASS 79
TAILGATE 79
OPERATION
DOOR 79
FLIP-UP GLASS 80
TAILGATE 80
ASH RECEIVER LAMP
REMOVAL
BULB 80
LAMP 81
INSTALLATION
BULB 81
LAMP 82
CARGO LAMP
REMOVAL
BULB 82
LAMP 82
INSTALLATION
BULB 83
LAMP 83
COURTESY LAMP
REMOVAL
BULB 83
LAMP 83
INSTALLATION
BULB 84
LAMP 84
DOME LAMP
REMOVAL
BULB - REAR 84
LAMP - REAR 85
INSTALLATION
BULB - REAR 85
LAMP - REAR 85
ILLUMINATION LAMP
REMOVAL
BULB - CMTC CONTROL 86
BULB - A/C-HEAT CONTROL 86
BULB - TRANSMISSION RANGE INDICATOR 87
INSTALLATION
BULB - CMTC CONTROL 87
BULB - A/C-HEAT CONTROL 88
BULB - TRANSMISSION RANGE INDICATOR 88
VANITY LAMP
REMOVAL - BULB 88
INSTALLATION - BULB 89

LAMPS/LIGHTING - INTERIOR

DESCRIPTION

The interior lighting system (Fig. 1) for this model includes incandescent lighting on two separate circuits: the dome/courtesy lamp circuit and the panel lamps dimmer circuit. The lamps on the dome/courtesy circuit include:

- **Cargo Lamp** - An available cargo lamp with an integral lens-actuated courtesy disable switch is located in the headliner near the rear roof header and is activated automatically whenever the rear flip-up glass is opened to illuminate the rear cargo area of the vehicle.
- **Courtesy Lamps** - Available courtesy lamps are located below both the right and left side of the instrument panel and are illuminated whenever the dome/courtesy lamp circuit is energized.
- **Front Dome Lamp** - A standard front dome lamp that does not include an on-off switch is located in the headliner near the windshield header, and is illuminated whenever the dome/courtesy lamp circuit is energized.
- **Reading Lamps** - Available front seat driver side and passenger side reading lamps located in the headliner near the windshield header are controlled by both the dome/courtesy lamp circuit and independent lens-actuated switches.
- **Rear Dome Lamp** - An available rear dome lamp is located in the center of the headliner above the rear seat is controlled by both the dome/courtesy lamp circuit and an independent lens-actuated switch.

LAMPS/LIGHTING - INTERIOR (Continued)

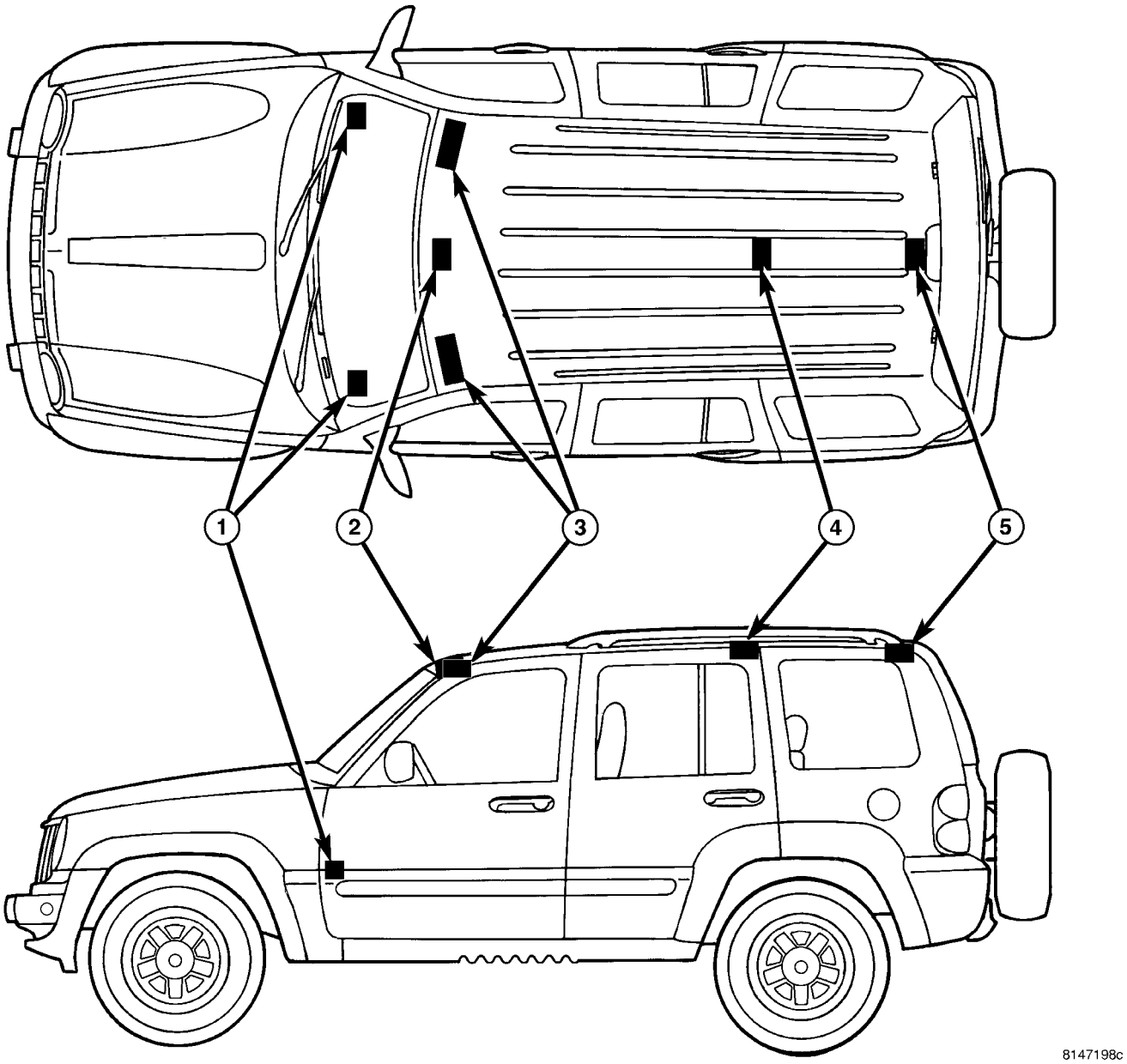

Fig. 1 Courtesy Lamps

1 - COURTESY LAMP (2)
2 - FRONT DOME/READING LAMP
3 - VANITY LAMP (2)
4- REAR DOME/READING LAMP
5 - CARGO LAMP

- **Vanity Lamps** - Available single intensity vanity lamps are located on each side of a covered mirror on both the right and left sun visors, and are controlled by an integral vanity mirror cover-actuated switch.

Most controls on the instrument panel and other controls located elsewhere on the interior of the vehicle are illuminated for night visibility. Some have miniature incandescent bulbs or Light-Emitting Diode (LED) units that are soldered to internal circuit boards and are not serviceable. The replaceable incandescent bulbs or bulb/bulb holder units in this vehicle include:

- **Ash Receiver Lamp** - An available ash receiver lamp is located above the ash receiver housing behind the instrument panel center bezel.
- **Compass Mini-Trip Control Illumination Lamps** - The optional Compass Mini-Trip Computer (CMTC) has three replaceable control illumination bulb/bulb holder units on its circuit board that are controlled by the panel lamps dimmer circuit.

LAMPS/LIGHTING - INTERIOR (Continued)

- **Heater-Air Conditioner Control Illumination Lamps** - The heater-air conditioner control has two replaceable control illumination bulb/bulb holder units on its circuit board that are controlled by the panel lamps dimmer circuit.
- **Instrument Cluster Illumination Lamps** - The ElectroMechanical Instrument Cluster (EMIC) has nine replaceable general illumination bulb/bulb holder units on its circuit board that are controlled by the panel lamps dimmer circuit. (Refer to 8 - ELECTRICAL/INSTRUMENT CLUSTER - DESCRIPTION).
- **Transmission Range Indicator Illumination Lamp** - Vehicles equipped with an automatic transmission have an illuminated transmission range indicator integral to the console mounted gearshift mechanism. Illumination is provided by a replaceable incandescent bulb that is controlled by the panel lamps dimmer circuit.

Other components of the interior lighting system for this model include:

- **Body Control Module** - The Body Control Module (BCM) is located on the Junction Block (JB) under the driver side outboard end of the instrument panel. (Refer to 8 - ELECTRICAL/ELECTRONIC CONTROL MODULES/BODY CONTROL MODULE - DESCRIPTION).
- **Door Ajar Switches** - A door ajar switch is integral to the door latch mechanism of each front and rear door.
- **Flip-Up Glass Ajar Switch** - A flip-up glass ajar switch is integral to the flip-up glass latch mechanism on the top of the tailgate inner panel.
- **Multi-Function Switch** - The multi-function switch is located on the top of the steering column, just below the steering wheel. The multi-function switch includes a left and right control stalk. The left control stalk is dedicated to providing almost all of the driver controls for both the exterior and interior lighting systems. (Refer to 8 - ELECTRICAL/LAMPS/LIGHTING - EXTERIOR/MULTI-FUNCTION SWITCH - DESCRIPTION).
- **Tailgate Ajar Switch** - A tailgate ajar switch is integral to the latch mechanism of the tailgate.

Hard wired circuitry connects the interior lighting system components to the electrical system of the vehicle. These hard wired circuits are integral to several wire harnesses, which are routed throughout the vehicle and retained by many different methods. These circuits may be connected to each other, to the vehicle electrical system and to the interior lighting components through the use of a combination of soldered splices, splice block connectors, and many different types of wire harness terminal connectors and insulators. Refer to the appropriate wiring information. The wiring information includes wiring diagrams, proper wire and connector repair procedures, further details on wire harness routing and retention, as well as pin-out and location views for the various wire harness connectors, splices and grounds.

OPERATION

The interior lighting systems can be divided into two general classifications based upon the circuit that controls their operation: The courtesy lamp circuit, or the panel lamps dimmer circuit. The hard wired circuits and components of the interior lighting systems may be diagnosed and tested using conventional diagnostic tools and procedures.

However, conventional diagnostic methods may not prove conclusive in the diagnosis of the Body Control Module (BCM), the ElectroMechanical Instrument Cluster (EMIC), or the Programmable Communications Interface (PCI) data bus network. The most reliable, efficient, and accurate means to diagnose the BCM, the EMIC, the PCI data bus, or the electronic bus message inputs and outputs related to the various interior lighting systems requires the use of a diagnostic scan tool. Refer to the appropriate diagnostic information.

COURTESY LAMP CIRCUIT

Depending upon the selected vehicle options the courtesy lamp circuit may include the courtesy lamps located below the instrument panel, the dome or map/reading lamps located in the headliner near the windshield and over the rear seat, the cargo lamp located in the headliner near the rear roof header, and the vanity lamps located in the sun visors. The lamps in the courtesy lamp circuit are provided with battery voltage at all times from a fuse in the Junction Block (JB). The Body Control Module (BCM) controls the ground path for these lamps based upon hard wired inputs from the door ajar switches, the flip-up glass ajar switch, the tailgate ajar switch the multi-function switch and the ignition switch.

After all of the ajar switch inputs to the BCM transition to open, the BCM will keep the lamps illuminated for about 27 seconds, then fade the lamps to off (theater dimming) over about three seconds. The BCM also provides courtesy lamp operation based upon a resistor multiplexed input from the interior lighting control ring on the left control stalk of the multi-function switch through the headlamp switch circuit, and provides an illuminated entry feature in response to certain electronic message inputs received from the optional Remote Keyless Entry (RKE) system.

A resistor multiplexed courtesy lamp defeat input from the control ring on the left control stalk of the multi-function switch will cause the BCM to override normal courtesy lamp operation based upon inputs

from all of the ajar switches. A hard wired input from the courtesy lamp defeat switch in the optional cargo lamp will cause the BCM to override normal courtesy lamp operation based upon inputs from only the flip-up glass and tailgate ajar switches.

For those lamps on the courtesy lamp circuit with independent switching such as the optional reading lamps and vanity lamps, the BCM provides a ground path to the switches using another internal driver through the courtesy lamp load shed circuit. The BCM provides a battery saver (load shedding) feature for all courtesy lamps, which will automatically turn these lamps off if they are left on for more than about eight minutes with the ignition switch in the Off position.

PANEL LAMPS DIMMER CIRCUIT

The panel lamps dimmer circuit includes the ElectroMechanical Instrument Cluster (EMIC), the heater-air conditioner control, the hazard switch and depending upon the selected vehicle options, the ash receiver and/or the automatic transmission range indicator illumination lamps. All lamps in the panel lamps dimmer circuit are provided a path to ground at all times through a hard wired ground circuit. These lamps illuminate based upon inputs to the Body Control Module (BCM) from the exterior lighting control knob and the interior lighting control ring on the left control stalk of the multi-function switch. The left control knob of the multi-function switch selects the exterior lights, while the left control ring selects the panel lamps intensity (dimming) level.

When the exterior lighting is turned On, the BCM energizes the park lamp relay and provides an electronic dimming level message to the ElectroMechanical Instrument Cluster (EMIC), the radio, and the Compass Mini-Trip Computer (CMTC) over the Programmable Communications Interface (PCI) data bus. The energized park lamp relay provides a hard wired battery voltage signal input to the EMIC on the park lamp relay output circuit. The EMIC responds to these inputs by supplying a 12-volt Pulse Width Modulated (PWM) output to all of the incandescent lamps in the panel lamps dimmer circuit over the fused panel lamps dimmer switch signal circuit. This shared PWM output synchronizes the selected illumination intensity level of all of the incandescent lamps in the panel lamps dimmer circuit.

The EMIC and the radio each use the electronic dimming level message from the BCM to control and synchronize the illumination intensity of their own Vacuum Fluorescent Display (VFD) units, while the CMTC uses the dimming level message to control the illumination intensity of both its VFD unit and its incandescent lighting. In addition, when the left control ring of the multi-function switch is moved to the Parade Mode detent position, all of the VFD units are illuminated at their full intensity levels for increased visibility when the vehicle is driven during daylight hours with the exterior lights turned On.

WARNINGS - LAMPS/LIGHTING - INTERIOR

WARNING:: To avoid personal injury or death, eye protection should be used when servicing any glass components.

CAUTION: Do not use bulbs with higher candle power than indicated in the Bulb Application table (Refer to 8 - ELECTRICAL/LAMPS/LIGHTING - INTERIOR - SPECIFICATIONS). In addition, do not use fuses, circuit breakers or relays having greater amperage values than indicated on the fuse panel or in the Owner's Manual. Damage to lamps, lenses, wiring and other related electrical components can result.

DIAGNOSIS AND TESTING

LAMPS/LIGHTING - INTERIOR

WARNING: To avoid personal injury or death, on vehicles equipped with airbags, disable the supplemental restraint system before attempting any steering wheel, steering column, airbag, occupant classification system, seat belt tensioner, impact sensor, or instrument panel component diagnosis or service. Disconnect and isolate the battery negative (ground) cable, then wait two minutes for the system capacitor to discharge before performing further diagnosis or service. This is the only sure way to disable the supplemental restraint system. Failure to take the proper precautions could result in accidental airbag deployment.

NOTE: When diagnosing the interior lighting circuits, remember that high generator output can burn out bulbs rapidly and repeatedly; and, that dim or flickering bulbs can be caused by low generator output or poor battery condition. If one of these symptoms is a problem on the vehicle, be certain to diagnose the battery and charging system, then repair as necessary.

LAMPS/LIGHTING - INTERIOR (Continued)

NOTE: A good ground is necessary for proper lighting operation. If a lighting problem is being diagnosed that involves multiple symptoms, systems, or components, the problem can often be traced to a loose, corroded, or open ground.

The hard wired interior lamp and lighting circuits may be diagnosed and tested using conventional diagnostic tools and procedures. Refer to the appropriate wiring information. The wiring information includes wiring diagrams, proper wire and connector repair procedures, details of wire harness routing and retention, connector pin-out information and location views for the various wire harness connectors, splices and grounds.

However, conventional diagnostic methods may not prove conclusive in the diagnosis of the Body Control Module (BCM), the ElectroMechanical Instrument Cluster (EMIC), the Programmable Communications Interface (PCI) data bus, or the electronic message inputs used to provide interior lamp and lighting service or many of the electronic features of the interior lamp and lighting systems. The most reliable, efficient, and accurate means to diagnose the BCM, the EMIC, the PCI data bus, and the electronic message inputs for the interior lamps and lighting system requires the use of a diagnostic scan tool. Refer to the appropriate diagnostic information.

COURTESY LAMP CIRCUIT

CONDITION	POSSIBLE CAUSES	CORRECTION
A SINGLE LAMP IN THE COURTESY LAMP CIRCUIT DOES NOT ILLUMINATE	1. Faulty or missing bulb.	1. Test and replace the courtesy lamp bulb as required.
	2. Faulty lamp switch.	2. Test and replace a faulty map/reading lamp switch, cargo lamp switch, or sunvisor (vanity lamp switch) as required.
	3. Faulty ground circuit.	3. Test and repair the open courtesy lamp driver circuit as required.
	4. Faulty ground circuit (independently switched lamps only).	4. Test and repair the open courtesy lamp load shed circuit as required.
	5. Faulty feed circuit.	5. Test and repair the open feed circuit as required.
ALL LAMPS IN THE COURTESY LAMP CIRCUIT DO NOT ILLUMINATE	1. Faulty or missing fuse.	1. Test and replace the fuse as required.
	2. Faulty ground circuit.	2. Test and repair the open ground circuit as required.
	3. Faulty feed circuit.	3. Test and repair the open feed circuit as required.
	4. Faulty cargo lamp (courtesy defeat switch).	4. Test and replace the cargo lamp as required.
	5. Faulty rear courtesy lamp control circuit.	5. Test and repair the shorted courtesy lamp control circuit as required.
	6. Faulty multi-function switch.	6. Test and replace the multi-function switch as required.
	7. Faulty Body Control Module (BCM), BCM input, or BCM output.	7. Use a diagnostic scan tool to test the BCM, its inputs, and its outputs. Refer to the appropriate diagnostic information.

LAMPS/LIGHTING - INTERIOR (Continued)

CONDITION	POSSIBLE CAUSES	CORRECTION
A SINGLE LAMP IN THE COURTESY LAMP CIRCUIT DOES NOT EXTINGUISH	1. Faulty lamp switch.	1. Test and replace a faulty map/reading lamp switch, cargo lamp switch, or sunvisor (vanity lamp switch) as required.
	2. Faulty ground circuit.	2. Test and repair the shorted courtesy lamp driver (ground) circuit as required.
ALL LAMPS IN THE COURTESY LAMP CIRCUIT DO NOT EXTINGUISH	1. Faulty ajar switch.	1. Test and replace a faulty door, tailgate, or liftglass ajar switch as required.
	2. Faulty ajar switch sense circuit.	2. Test and repair the shorted ajar switch sense circuit as required.
	3. Faulty ground circuit.	3. Test and repair the shorted courtesy lamp driver (ground) circuit as required.
	4. Faulty Body Control Module (BCM), BCM input, or BCM output.	4. Use a diagnostic scan tool to test the BCM, its inputs, and its outputs. Refer to the appropriate diagnostic information.

PANEL LAMPS DIMMER CIRCUIT

CONDITION	POSSIBLE CAUSES	CORRECTION
A SINGLE LAMP DOES NOT ILLUMINATE	1. Faulty or missing bulb.	1. Test and replace lamp bulb as required.
	2. Faulty ground circuit.	2. Test and repair lamp ground circuit as required.
	3. Faulty supply circuit.	3. Test and repair open fused panel lamps dimmer switch signal circuit as required.
A SINGLE LAMP DOES NOT EXTINGUISH	1. Faulty supply circuit.	1. Test and repair shorted fused panel lamps dimmer switch signal circuit as required.
ALL LAMPS DO NOT ILLUMINATE	1. Faulty fused park lamp relay output circuit.	1. Test and repair open fused park lamp relay output circuit as required.
	2. Faulty or missing park lamp relay.	2. Test and replace park lamp relay as required.
	3. Faulty fused panel lamps dimmer switch signal circuit.	3. Test and repair open fused panel lamps dimmer switch signal circuit as required.
	4. Faulty Body Control Module (BCM), BCM input, or BCM output.	4. Use a diagnostic scan tool to test the BCM, its inputs, and its outputs. Refer to the appropriate diagnostic information.
	5. Faulty ElectroMechanical Instrument Cluster (EMIC), EMIC input, or EMIC output.	5. Use a diagnostic scan tool to test the EMIC, its inputs, and its outputs. Refer to the appropriate diagnostic information.
	6. Faulty multi-function switch.	6. Test and replace the multi-function switch as required.
ALL LAMPS EXCEPT CLUSTER ILLUMINATION DO NOT EXTINGUISH	1. Faulty supply circuit.	1. Test and repair shorted fused panel lamps dimmer switch signal circuit as required.

LAMPS/LIGHTING - INTERIOR (Continued)

SPECIFICATIONS

LAMPS/LIGHTING - INTERIOR

COURTESY LAMPS

BULB APPLICATION TABLE	
LAMP	BULB
Cargo	578
Courtesy	906
Front Map/Reading	578
Rear Dome	578
Vanity Mirror	MOPAR 6501966

PANEL LAMPS

BULB APPLICATION TABLE	
LAMP	BULB
Ash Receiver	161
Cluster Illumination	103
Compass Mini-Trip Illumination	MOPAR 4437661
Heater-A/C Control Illumination	74
Transmission Range Indicator Illumination	S14V

AJAR SWITCH

DESCRIPTION

DOOR

This vehicle has four door ajar switches, one for each door. Each switch is concealed within and integral to its respective door latch unit. The switches are momentary leaf contact-type units that are actuated by the mechanisms internal to the door latch. A short pigtail wire and connector on each door latch connects the door ajar switch to the vehicle electrical system through its respective door wire harness. The door ajar switches cannot be adjusted or repaired and, if faulty or damaged, the door latch unit must be replaced. (Refer to 23 - BODY/DOOR - FRONT/LATCH - REMOVAL) or (Refer to 23 - BODY/DOOR - REAR/LATCH - REMOVAL).

FLIP-UP GLASS

A flip-up glass ajar switch is standard equipment in this vehicle. This switch is concealed within and integral to the flip-up glass latch. The switch is a momentary leaf contact-type unit that is actuated by the flip-up glass latch mechanism. An integral dedicated connector receptacle on the flip-up glass latch connects the flip-up glass ajar switch to the vehicle electrical system through the tailgate wire harness. The flip-up glass ajar switch cannot be adjusted or repaired and, if faulty or damaged, the latch unit must be replaced. (Refer to 23 - BODY/SWING GATE/FLIP-UP GLASS LATCH - REMOVAL).

TAILGATE

A tailgate ajar switch is standard equipment in this vehicle. This switch is concealed within and integral to the tailgate latch unit. The switch is a momentary leaf contact-type unit that is actuated by the mechanism internal to the tailgate latch. A pigtail wire harness and connector on the tailgate latch connects the tailgate ajar switch to the vehicle electrical system through the tailgate wire harness. The tailgate ajar switch cannot be adjusted or repaired and, if faulty or damaged, the latch unit must be replaced. (Refer to 23 - BODY/SWING GATE/LATCH - REMOVAL).

OPERATION

DOOR

The door ajar switches are actuated by the mechanisms internal to the door latch. When a door is closed and properly latched, its door ajar switch is an open circuit. When a door is open or only partially latched, the door ajar switch is a closed circuit.

The door ajar switches are hard wired between a body ground and the Body Control Module (BCM). The front door ajar switches are connected to the BCM through a driver or passenger door ajar switch sense circuit, while the rear door ajar switches are connected to the BCM through a left or right rear door ajar switch sense circuit. The BCM reads the door ajar switch status through an internal pull-up, then sends electronic door ajar switch status messages to the ElectroMechanical Instrument Cluster (EMIC) over the Programmable Communications Interface (PCI) data bus and uses these inputs to control many electronic functions and features of the vehicle.

The door ajar switches can be diagnosed and tested using conventional diagnostic tools and procedures. Refer to the appropriate wiring information. However, conventional diagnostic methods may not prove conclusive in the diagnosis of the BCM, the EMIC, the PCI data bus, or the electronic messaging used to convey door ajar switch status to other modules in the vehicle. The most reliable, efficient, and accurate means to diagnose the BCM, the EMIC, the PCI data

AJAR SWITCH (Continued)

bus, and both the hard wired and electronic message inputs and outputs affected by the door ajar switch inputs requires the use of a diagnostic scan tool. Refer to the appropriate diagnostic information.

FLIP-UP GLASS

The flip-up glass ajar switch is actuated by the flip-up glass latch mechanism. When the flip-up glass is closed and properly latched, the flip-up glass ajar switch is an open circuit. When the flip-up glass is open or only partially latched, the flip-up glass ajar switch is a closed circuit. The flip-up glass ajar switch is hard wired between a body ground and both the Body Control Module (BCM) and the rear wiper motor.

The output of the switch is connected to the BCM and rear wiper motor through a flip-up glass ajar switch sense circuit. The BCM reads the flip-up glass ajar switch status through an internal pull-up, then sends electronic flip-up glass ajar switch status messages to the ElectroMechanical Instrument Cluster (EMIC) over the Programmable Communications Interface (PCI) data bus and uses this input to control many electronic functions and features of the vehicle. The rear wiper motor uses this input to restrict rear wiper operation when the flip-up glass is ajar.

The flip-up glass ajar switch can be diagnosed and tested using conventional diagnostic tools and procedures. Refer to the appropriate wiring information. However, conventional diagnostic methods may not prove conclusive in the diagnosis of the BCM, the EMIC, the PCI data bus, or the electronic messaging used to convey flip-up glass ajar switch status to other modules in the vehicle. The most reliable, efficient, and accurate means to diagnose the BCM, the EMIC, the PCI data bus, and both the hard wired and electronic message inputs and outputs affected by the flip-up glass ajar switch inputs requires the use of a diagnostic scan tool. Refer to the appropriate diagnostic information.

TAILGATE

The tailgate switch is actuated by the mechanism internal to the tailgate latch. When the tailgate is closed and properly latched, the tailgate ajar switch is an open circuit. When the tailgate is open or only partially latched, the tailgate ajar switch is a closed circuit.

The tailgate ajar switch is hard wired between a body ground and the Body Control Module (BCM). The output of the switch is connected to the BCM through a tailgate ajar switch sense circuit. The BCM reads the tailgate ajar switch status through an internal pull-up, then sends electronic tailgate ajar switch status messages to the ElectroMechanical Instrument Cluster (EMIC) over the Programmable Communications Interface (PCI) data bus and uses this input to control many electronic functions and features of the vehicle.

The tailgate ajar switch can be diagnosed and tested using conventional diagnostic tools and procedures. Refer to the appropriate wiring information. However, conventional diagnostic methods may not prove conclusive in the diagnosis of the BCM, the EMIC, the PCI data bus, or the electronic messaging used to convey tailgate ajar switch status to other modules in the vehicle. The most reliable, efficient, and accurate means to diagnose the BCM, the EMIC, the PCI data bus, and both the hard wired and electronic message inputs and outputs affected by the tailgate ajar switch input requires the use of a diagnostic scan tool. Refer to the appropriate diagnostic information.

ASH RECEIVER LAMP

REMOVAL

BULB

WARNING: To avoid personal injury or death, on vehicles equipped with airbags, disable the supplemental restraint system before attempting any steering wheel, steering column, airbag, occupant classification system, seat belt tensioner, impact sensor, or instrument panel component diagnosis or service. Disconnect and isolate the battery negative (ground) cable, then wait two minutes for the system capacitor to discharge before performing further diagnosis or service. This is the only sure way to disable the supplemental restraint system. Failure to take the proper precautions could result in accidental airbag deployment.

(1) Disconnect and isolate the battery negative cable.

(2) Remove the ash receiver lamp unit from the top of the ash receiver housing (Refer to 8 - ELECTRICAL/LAMPS/LIGHTING - INTERIOR/ASH RECEIVER LAMP UNIT - REMOVAL).

(3) Carefully disengage the ash receiver lamp hood from the integral snap features on each side of the lamp socket and remove the hood (Fig. 2).

(4) Pull the bulb straight out of the socket.

ASH RECEIVER LAMP (Continued)

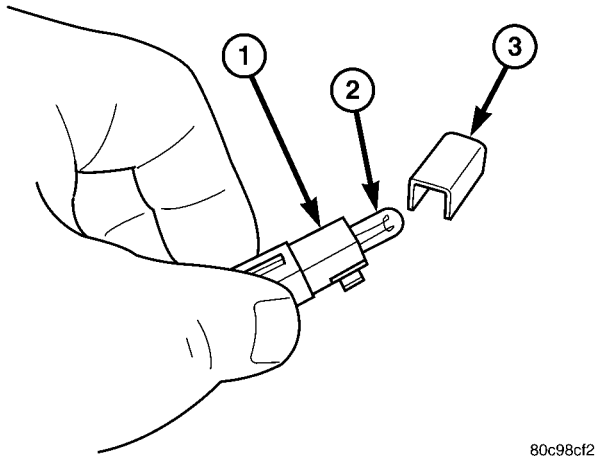

Fig. 2 Ash Receiver Lamp Bulb

1 - SOCKET
2 - BULB
3 - HOOD

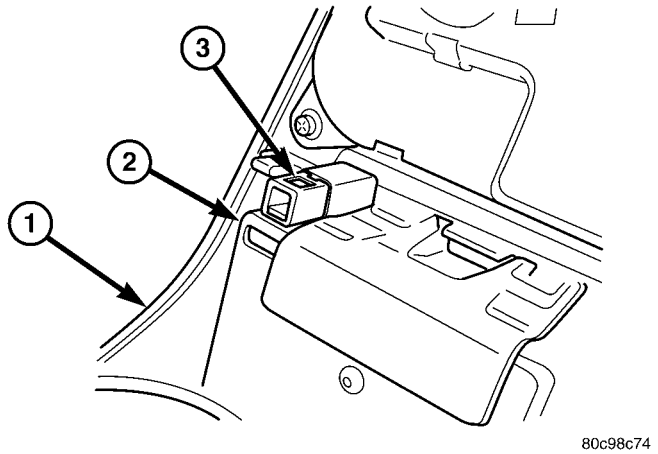

Fig. 3 Ash Receiver Lamp

1 - CENTER BEZEL
2 - ASH RECEIVER HOUSING
3 - ASH RECEIVER LAMP UNIT

LAMP

WARNING: To avoid personal injury or death, on vehicles equipped with airbags, disable the supplemental restraint system before attempting any steering wheel, steering column, airbag, occupant classification system, seat belt tensioner, impact sensor, or instrument panel component diagnosis or service. Disconnect and isolate the battery negative (ground) cable, then wait two minutes for the system capacitor to discharge before performing further diagnosis or service. This is the only sure way to disable the supplemental restraint system. Failure to take the proper precautions could result in accidental airbag deployment.

(1) Disconnect and isolate the battery negative cable.

(2) Remove the center bezel from the instrument panel. (Refer to 23 - BODY/INSTRUMENT PANEL/ INSTRUMENT PANEL CENTER BEZEL - REMOVAL).

(3) While pulling the lamp unit away from the top of the ash receiver housing, carefully release the four integral latches that secure the lamp to the mounting hole in the top of the housing (Fig. 3).

(4) Remove the lamp from the top of the ash receiver housing.

INSTALLATION

BULB

WARNING: To avoid personal injury or death, on vehicles equipped with airbags, disable the supplemental restraint system before attempting any steering wheel, steering column, airbag, occupant classification system, seat belt tensioner, impact sensor, or instrument panel component diagnosis or service. Disconnect and isolate the battery negative (ground) cable, then wait two minutes for the system capacitor to discharge before performing further diagnosis or service. This is the only sure way to disable the supplemental restraint system. Failure to take the proper precautions could result in accidental airbag deployment.

CAUTION: Always use the correct bulb size and type for replacement. An incorrect bulb size or type may overheat and cause damage to the lamp, the socket and/or the lamp wiring.

(1) Align the base of the ash receiver lamp bulb with the lamp socket (Fig. 2).

(2) Push the bulb straight into the socket until the base is firmly seated.

(3) Carefully slide the hood onto the lamp socket until it is fully engaged with the integral snap features on each side of the socket.

(4) Reinstall the lamp onto the top of the ash receiver housing (Refer to 8 - ELECTRICAL/LAMPS/ LIGHTING - INTERIOR/ASH RECEIVER LAMP UNIT - INSTALLATION).

(5) Reconnect the battery negative cable.

ASH RECEIVER LAMP (Continued)

LAMP

WARNING: To avoid personal injury or death, on vehicles equipped with airbags, disable the supplemental restraint system before attempting any steering wheel, steering column, airbag, occupant classification system, seat belt tensioner, impact sensor, or instrument panel component diagnosis or service. Disconnect and isolate the battery negative (ground) cable, then wait two minutes for the system capacitor to discharge before performing further diagnosis or service. This is the only sure way to disable the supplemental restraint system. Failure to take the proper precautions could result in accidental airbag deployment.

(1) Align the four integral latches of the lamp unit to the lamp mounting hole on the top of the ash receiver housing (Fig. 3).

(2) Using hand pressure, press firmly and evenly on the lamp until each of the four integral latches snap into place in the lamp mounting hole.

(3) Reinstall the center bezel onto the instrument panel. (Refer to 23 - BODY/INSTRUMENT PANEL/ INSTRUMENT PANEL CENTER BEZEL - INSTALLATION).

(4) Reconnect the battery negative cable.

CARGO LAMP

REMOVAL

BULB

(1) Disconnect and isolate the battery negative cable.

(2) Insert the tip of a small flat-bladed screwdriver into the notch on one side of the cargo lamp between the lens and the lamp housing (Fig. 4).

(3) Gently pry the notched edge of the lens downward until it unsnaps from the housing.

(4) Swing the notched end of the lens downward far enough to access the bulb.

(5) Carefully unsnap the bulb from the two bulb holders within the cargo lamp housing.

LAMP

(1) Disconnect and isolate the battery negative cable.

(2) Insert the tip of a small flat bladed screwdriver into the notch between the lens and the housing on one side of the cargo lamp unit (Fig. 5).

(3) Gently pry the end of the lens outward until it unsnaps from the housing.

(4) Swing the lens outward until it is perpendicular to the housing.

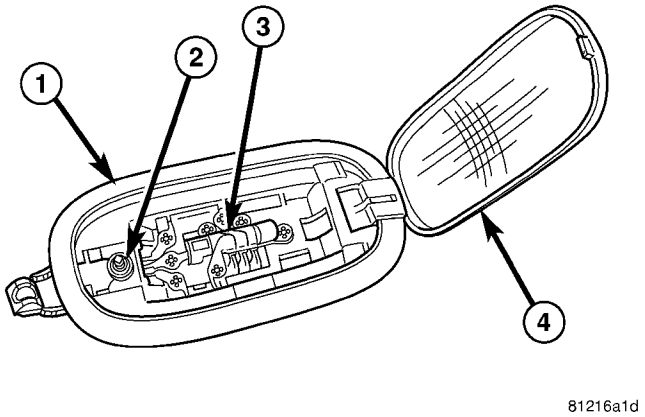

Fig. 4 Cargo Lamp Bulb Remove/Install

1 - HOUSING
2 - SWITCH
3 - BULB
4 - LENS

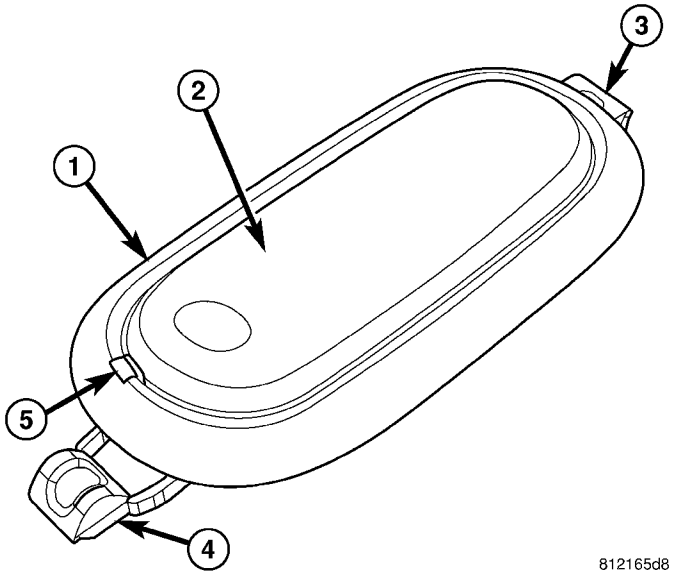

Fig. 5 Cargo Lamp Unit Remove/Install

1 - HOUSING
2 - LENS
3 - HINGE/RETAINER
4 - FIXED RETAINER
5 - NOTCH

(5) Pull the lens hinge/retainer end of the housing outward slightly from the headliner, then slide the exposed end of the housing away from the mounting hole far enough to disengage the fixed retainer on the notched end from the headliner.

(6) Pull the lamp away from the headliner mounting hole far enough to access and disconnect the wire harness connector from the back of the lamp.

(7) Remove the lamp from the vehicle.

CARGO LAMP (Continued)

INSTALLATION

BULB

CAUTION: Always use the correct bulb size and type for replacement. An incorrect bulb size or type may overheat and cause damage to the lamp, the socket and/or the lamp wiring.

(1) Align the ends of the bulb with the two bulb holders within the cargo lamp housing (Fig. 4).

(2) Carefully press the bulb firmly and evenly into the bulb holders until it snaps into place.

(3) Swing the notched end of the lens up into position against the housing, then press upward on the lens firmly and evenly until it snaps into the housing.

(4) Reconnect the battery negative cable.

LAMP

(1) Position the dome lamp unit to the mounting hole in the headliner.

(2) Reconnect the wire harness connector to the connector on the back of the lamp.

(3) Insert the fixed retainer on the notched end of the lamp housing up into one side of the mounting hole in the headliner (Fig. 5).

(4) Slide the notched end of the housing into the mounting hole far enough to engage the lens hinge/retainer into the opposite side of the hole in the headliner.

(5) Gently and evenly press the lens hinge/retainer end of the lamp into the mounting hole until the bezel of the lamp housing is flush with the headliner.

(6) Swing the notched end of the lamp lens into position against the lamp housing, then press on the lens firmly and evenly until it snaps into the housing.

(7) Reconnect the battery negative cable.

COURTESY LAMP

REMOVAL

BULB

WARNING: To avoid personal injury or death, on vehicles equipped with airbags, disable the supplemental restraint system before attempting any steering wheel, steering column, airbag, occupant classification system, seat belt tensioner, impact sensor, or instrument panel component diagnosis or service. Disconnect and isolate the battery negative (ground) cable, then wait two minutes for the system capacitor to discharge before performing further diagnosis or service. This is the only sure way to disable the supplemental restraint system. Failure to take the proper precautions could result in accidental airbag deployment.

(1) Disconnect and isolate the battery negative cable.

(2) Support the courtesy lamp unit housing with one hand while firmly grasping the flange on the outer circumference of the lens with the other hand, then pull the lens straight down to unsnap it from the housing (Fig. 6).

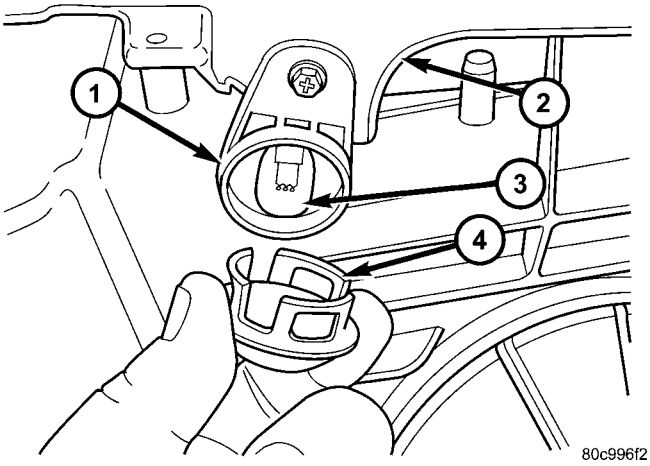

Fig. 6 Courtesy Lamp Lens

1 - COURTESY LAMP
2 - LOWER INSTRUMENT PANEL
3 - BULB
4 - LENS

(3) Pull the bulb straight out of the courtesy lamp socket.

LAMP

WARNING: To avoid personal injury or death, on vehicles equipped with airbags, disable the supplemental restraint system before attempting any steering wheel, steering column, airbag, occupant classification system, seat belt tensioner, impact sensor, or instrument panel component diagnosis or service. Disconnect and isolate the battery negative (ground) cable, then wait two minutes for the system capacitor to discharge before performing further diagnosis or service. This is the only sure way to disable the supplemental restraint system. Failure to take the proper precautions could result in accidental airbag deployment.

(1) Disconnect and isolate the battery negative cable.

(2) Remove the screw that secures the integral mounting tab of the courtesy lamp unit to the lower instrument panel (Fig. 7).

COURTESY LAMP (Continued)

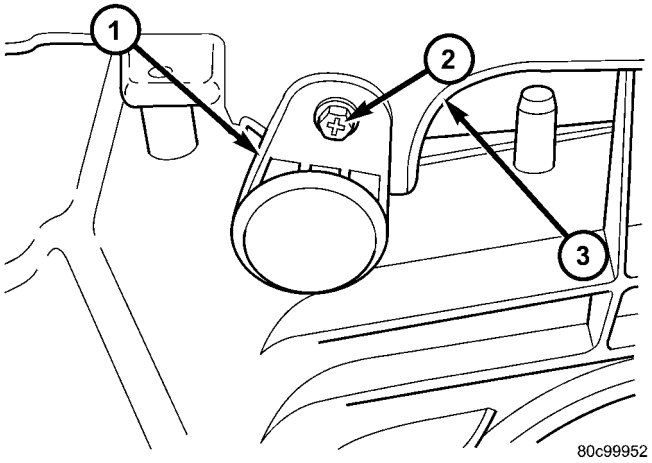

Fig. 7 Courtesy Lamp

1 - COURTESY LAMP UNIT
2 - SCREW (1)
3 - LOWER INSTRUMENT PANEL

(3) Pull the courtesy lamp down from the lower instrument panel far enough to access and disconnect the instrument panel wire harness connector from the back of the courtesy lamp.

(4) Remove the courtesy lamp from under the instrument panel.

INSTALLATION

BULB

WARNING: To avoid personal injury or death, on vehicles equipped with airbags, disable the supplemental restraint system before attempting any steering wheel, steering column, airbag, occupant classification system, seat belt tensioner, impact sensor, or instrument panel component diagnosis or service. Disconnect and isolate the battery negative (ground) cable, then wait two minutes for the system capacitor to discharge before performing further diagnosis or service. This is the only sure way to disable the supplemental restraint system. Failure to take the proper precautions could result in accidental airbag deployment.

CAUTION: Always use the correct bulb size and type for replacement. An incorrect bulb size or type may overheat and cause damage to the lamp, the socket and/or the lamp wiring.

(1) Align the base of the bulb with the courtesy lamp socket.

(2) Push the bulb straight into the lamp socket until the base is firmly seated (Fig. 6).

(3) Align the lens with the courtesy lamp unit housing.

(4) Support the lamp housing with one hand while firmly and evenly pushing the lens into the housing with the other hand, until the lens snaps into place.

(5) Reconnect the battery negative cable.

LAMP

WARNING: To avoid personal injury or death, on vehicles equipped with airbags, disable the supplemental restraint system before attempting any steering wheel, steering column, airbag, occupant classification system, seat belt tensioner, impact sensor, or instrument panel component diagnosis or service. Disconnect and isolate the battery negative (ground) cable, then wait two minutes for the system capacitor to discharge before performing further diagnosis or service. This is the only sure way to disable the supplemental restraint system. Failure to take the proper precautions could result in accidental airbag deployment.

(1) Position the courtesy lamp unit under the instrument panel.

(2) Reconnect the instrument panel wire harness connector to the back of the courtesy lamp.

(3) Position the courtesy lamp to the lower instrument panel (Fig. 7).

(4) Install and tighten the screw that secures the integral mounting tab of the courtesy lamp to the lower instrument panel. Tighten the screw to 2 N·m (17 in. lbs.).

(5) Reconnect the negative battery cable.

DOME LAMP

REMOVAL

BULB - REAR

(1) Disconnect and isolate the battery negative cable.

(2) Insert the tip of a small flat-bladed screwdriver into the notch on one side of the rear dome lamp between the lens and the lamp housing (Fig. 8).

(3) Gently pry the notched edge of the lens downward until it unsnaps from the housing.

(4) Swing the notched end of the lens downward far enough to access the bulb.

(5) Carefully unsnap the bulb from the two bulb holders within the rear dome lamp housing.

DOME LAMP (Continued)

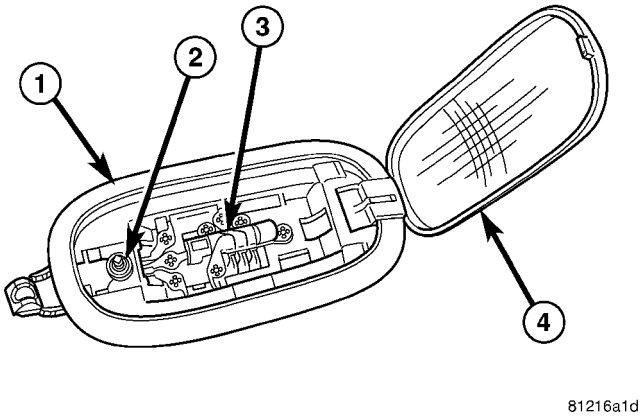

Fig. 8 Rear Seat Dome/Reading Lamp Bulb Remove/Install

1 - HOUSING
2 - SWITCH
3 - BULB
4 - LENS

LAMP - REAR

(1) Disconnect and isolate the battery negative cable.

(2) Insert the tip of a small flat bladed screwdriver into the notch between the lens and the housing on one side of the rear dome lamp unit (Fig. 9).

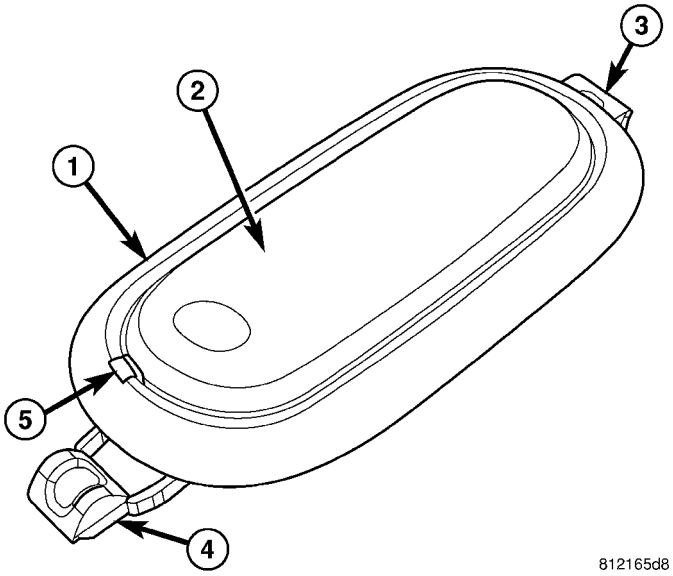

Fig. 9 Rear Dome Lamp Unit Remove/Install

1 - HOUSING
2 - LENS
3 - HINGE/RETAINER
4 - FIXED RETAINER
5 - NOTCH

(3) Gently pry the end of the lens outward until it unsnaps from the housing.

(4) Swing the lens outward until it is perpendicular to the housing.

(5) Pull the lens hinge/retainer end of the housing outward slightly from the headliner, then slide the exposed end of the housing away from the mounting hole far enough to disengage the fixed retainer on the notched end from the headliner.

(6) Pull the lamp away from the headliner mounting hole far enough to access and disconnect the wire harness connector from the back of the lamp.

(7) Remove the lamp from the vehicle.

INSTALLATION

BULB - REAR

CAUTION: Always use the correct bulb size and type for replacement. An incorrect bulb size or type may overheat and cause damage to the lamp, the socket and/or the lamp wiring.

(1) Align the ends of the bulb with the two bulb holders within the rear dome lamp housing (Fig. 8).

(2) Carefully press the bulb firmly and evenly into the bulb holders until it snaps into place.

(3) Swing the notched end of the lens up into position against the housing, then press upward on the lens firmly and evenly until it snaps into the housing.

(4) Reconnect the battery negative cable.

LAMP - REAR

(1) Position the rear dome lamp unit to the mounting hole in the headliner (Fig. 9).

(2) Reconnect the wire harness connector to the connector on the back of the lamp.

(3) Insert the fixed retainer on the notched end of the lamp housing up into one side of the mounting hole in the headliner.

(4) Slide the notched end of the housing into the mounting hole far enough to engage the lens hinge/retainer into the opposite side of the hole in the headliner.

(5) Gently and evenly press the lens hinge/retainer end of the lamp into the mounting hole until the bezel of the lamp housing is flush with the headliner.

(6) Swing the notched end of the lamp lens into position against the lamp housing, then press on the lens firmly and evenly until it snaps into the housing.

(7) Reconnect the battery negative cable.

ILLUMINATION LAMP

REMOVAL

BULB - CMTC CONTROL

WARNING: To avoid personal injury or death, on vehicles equipped with airbags, disable the supplemental restraint system before attempting any steering wheel, steering column, airbag, occupant classification system, seat belt tensioner, impact sensor, or instrument panel component diagnosis or service. Disconnect and isolate the battery negative (ground) cable, then wait two minutes for the system capacitor to discharge before performing further diagnosis or service. This is the only sure way to disable the supplemental restraint system. Failure to take the proper precautions could result in accidental airbag deployment.

NOTE: The Compass Mini-Trip Computer (CMTC) in the overhead console includes either two or three incandescent illumination bulb and bulb holder units. Three bulbs are used only on models that also feature the optional Universal Garage Door Opener (UGDO).

(1) Disconnect and isolate the battery negative cable.

(2) Remove the overhead console from the headliner. (Refer to 8 - ELECTRICAL/OVERHEAD CONSOLE - REMOVAL).

(3) Use a small thin-bladed screwdriver to rotate the bulb holder counterclockwise about 30 degrees to unlock it from the keyed opening in the Compass Mini-Trip Computer (CMTC) unit circuit board (Fig. 10).

(4) Pull the bulb holder and bulb straight out of the circuit board.

BULB - A/C-HEAT CONTROL

WARNING: To avoid personal injury or death, on vehicles equipped with airbags, disable the supplemental restraint system before attempting any steering wheel, steering column, airbag, occupant classification system, seat belt tensioner, impact sensor, or instrument panel component diagnosis or service. Disconnect and isolate the battery negative (ground) cable, then wait two minutes for the system capacitor to discharge before performing further diagnosis or service. This is the only sure way to disable the supplemental restraint system. Failure to take the proper precautions could result in accidental airbag deployment.

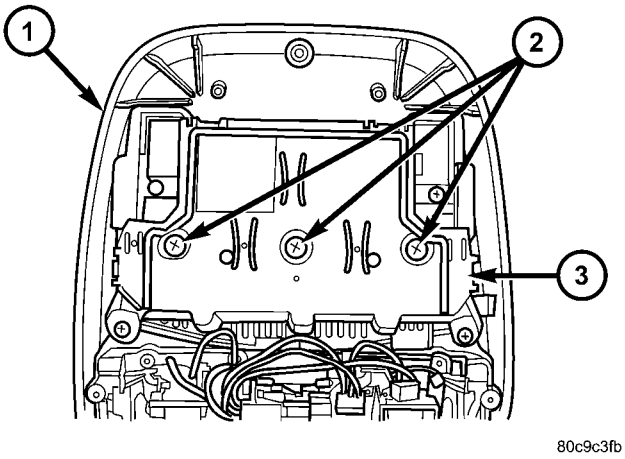

Fig. 10 Compass Mini-Trip Illumination Bulb Remove/Install

1 - OVERHEAD CONSOLE
2 - BULB & HOLDER (3)
3 - COMPASS MINI-TRIP COMPUTER

(1) Disconnect and isolate the battery negative cable.

(2) Remove the center bezel from the instrument panel. (Refer to 23 - BODY/INSTRUMENT PANEL/INSTRUMENT PANEL CENTER BEZEL - REMOVAL).

(3) Use a small thin-bladed screwdriver to rotate the bulb holder counterclockwise about 30 degrees to unlock it from the keyed opening on the A/C-heater control circuit board (Fig. 11).

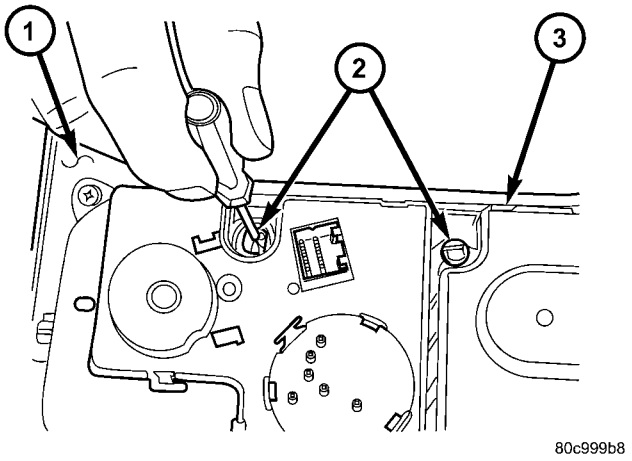

Fig. 11 Heater-A/C Control Illumination Bulb Remove/Install

1 - CENTER BEZEL
2 - BULB HOLDER & BULB (2)
3 - HEATER-A/C CONTROL

(4) Pull the bulb holder and bulb straight out of the circuit board.

ILLUMINATION LAMP (Continued)

BULB - TRANSMISSION RANGE INDICATOR

WARNING: To avoid personal injury or death, on vehicles equipped with airbags, disable the supplemental restraint system before attempting any steering wheel, steering column, airbag, occupant classification system, seat belt tensioner, impact sensor, or instrument panel component diagnosis or service. Disconnect and isolate the battery negative (ground) cable, then wait two minutes for the system capacitor to discharge before performing further diagnosis or service. This is the only sure way to disable the supplemental restraint system. Failure to take the proper precautions could result in accidental airbag deployment.

(1) Disconnect and isolate the battery negative cable.

(2) Remove the center console from the floor panel transmission tunnel. (Refer to 23 - BODY/INTERIOR/FLOOR CONSOLE - REMOVAL).

(3) From the left side of the vehicle, reach between the transmission range indicator and the floor panel transmission tunnel to access the illumination lamp socket (Fig. 12).

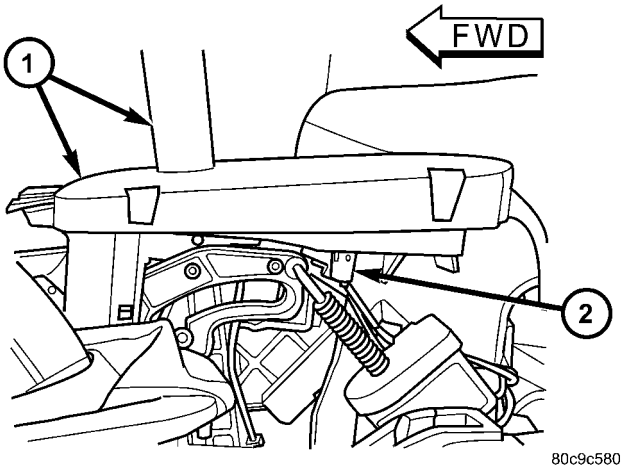

Fig. 12 Transmission Range Indicator Illumination Bulb Remove/Install

1 - AUTOMATIC TRANSMISSION SHIFT MECHANISM
2 - ILLUMINATION LAMP SOCKET

(4) Rotate the socket counterclockwise about 30 degrees to unlock it from the bottom of the range indicator.

(5) Pull the socket and bulb straight out of the keyed opening in the range indicator.

(6) Pull the bulb straight out of the socket.

INSTALLATION

BULB - CMTC CONTROL

WARNING: To avoid personal injury or death, on vehicles equipped with airbags, disable the supplemental restraint system before attempting any steering wheel, steering column, airbag, occupant classification system, seat belt tensioner, impact sensor, or instrument panel component diagnosis or service. Disconnect and isolate the battery negative (ground) cable, then wait two minutes for the system capacitor to discharge before performing further diagnosis or service. This is the only sure way to disable the supplemental restraint system. Failure to take the proper precautions could result in accidental airbag deployment.

CAUTION: Always use the correct bulb size and type for replacement. An incorrect bulb size or type may overheat and cause damage to the lamp, the socket and/or the lamp wiring.

NOTE: The Compass Mini-Trip Computer (CMTC) in the overhead console includes either two or three incandescent illumination bulb and bulb holder units. Three bulbs are used only on models that also feature the optional Universal Garage Door Opener (UGDO).

(1) Align the bulb holder and bulb with the keyed opening in the circuit board of the Compass Mini-Trip Computer (CMTC).

(2) Insert the bulb holder and bulb straight into the circuit board until the bulb holder is firmly seated (Fig. 10).

(3) Using a small thin-bladed screwdriver, rotate the bulb holder clockwise about 30 degrees on the circuit board to lock it into place.

(4) Reinstall the overhead console onto the headliner. (Refer to 8 - ELECTRICAL/OVERHEAD CONSOLE - INSTALLATION).

(5) Reconnect the battery negative cable.

ILLUMINATION LAMP (Continued)

BULB - A/C-HEAT CONTROL

WARNING: To avoid personal injury or death, on vehicles equipped with airbags, disable the supplemental restraint system before attempting any steering wheel, steering column, airbag, occupant classification system, seat belt tensioner, impact sensor, or instrument panel component diagnosis or service. Disconnect and isolate the battery negative (ground) cable, then wait two minutes for the system capacitor to discharge before performing further diagnosis or service. This is the only sure way to disable the supplemental restraint system. Failure to take the proper precautions could result in accidental airbag deployment.

CAUTION: Always use the correct bulb size and type for replacement. An incorrect bulb size or type may overheat and cause damage to the lamp, the socket and/or the lamp wiring.

(1) Align the bulb holder and bulb with the keyed opening in the circuit board of the heater-A/C control.

(2) Insert the bulb holder and bulb straight into the circuit board until the bulb holder is firmly seated (Fig. 11).

(3) Using a small thin-bladed screwdriver, rotate the bulb holder clockwise about 30 degrees on the circuit board to lock it into place.

(4) Reinstall the center bezel onto the instrument panel. (Refer to 23 - BODY/INSTRUMENT PANEL/INSTRUMENT PANEL CENTER BEZEL - INSTALLATION).

(5) Reconnect the battery negative cable.

BULB - TRANSMISSION RANGE INDICATOR

WARNING: To avoid personal injury or death, on vehicles equipped with airbags, disable the supplemental restraint system before attempting any steering wheel, steering column, airbag, occupant classification system, seat belt tensioner, impact sensor, or instrument panel component diagnosis or service. Disconnect and isolate the battery negative (ground) cable, then wait two minutes for the system capacitor to discharge before performing further diagnosis or service. This is the only sure way to disable the supplemental restraint system. Failure to take the proper precautions could result in accidental airbag deployment.

CAUTION: Always use the correct bulb size and type for replacement. An incorrect bulb size or type may overheat and cause damage to the lamp, the socket and/or the lamp wiring.

(1) Align the base of the bulb with the transmission range indicator illumination lamp socket.

(2) Push the bulb straight into the socket until the base is firmly seated.

(3) Align the lamp socket and bulb with the keyed opening on the bottom of the indicator (Fig. 12).

(4) Insert the socket and bulb straight into the bottom of the indicator until the socket is firmly seated.

(5) Rotate the socket clockwise about 30 degrees to lock it into place.

(6) Reinstall the center console onto the floor panel transmission tunnel. (Refer to 23 - BODY/INTERIOR/FLOOR CONSOLE - INSTALLATION).

(7) Reconnect the battery negative cable.

VANITY LAMP

REMOVAL - BULB

NOTE: Vehicles equipped with optional vanity lamps have a mirror with a lamp that is integral to each sun visor. Each lamp is independently controlled by an integral switch that is automatically actuated by the mirror cover. The bulb types and service procedures are identical for both of these lamps.

(1) Disconnect and isolate the battery negative cable.

(2) Insert a small thin-bladed tool on either side near the top or the bottom between the vanity lamp lens and the lamp housing (Fig. 13).

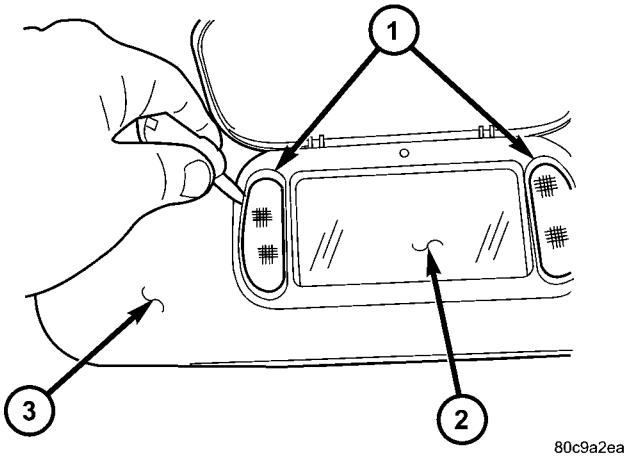

Fig. 13 Vanity Lamp Lens Remove

1 - LENS (2)
2 - MIRROR
3 - SUN VISOR

(3) Carefully pry the lens outward until it unsnaps from the lamp housing.

VANITY LAMP (Continued)

(4) Using small needle-nose pliers, carefully grasp the bulb and pull the base out of the lamp socket (Fig. 14).

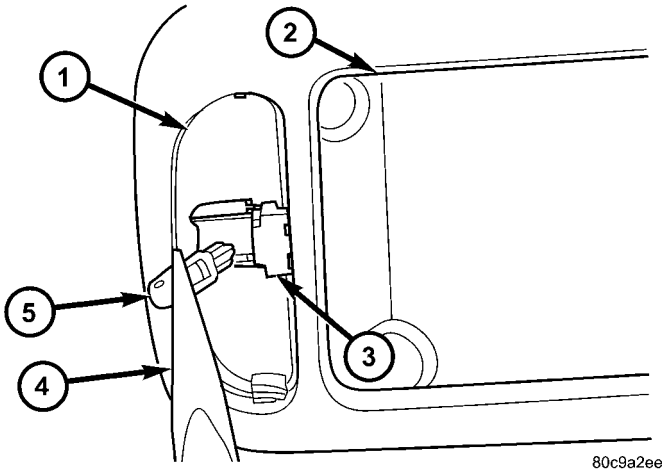

Fig. 14 Vanity Lamp Bulb Remove/Install

1 - HOUSING
2 - MIRROR
3 - SOCKET
4 - NEEDLE-NOSE PLIERS
5 - BULB

INSTALLATION - BULB

CAUTION: Always use the correct bulb size and type for replacement. An incorrect bulb size or type may overheat and cause damage to the lamp, the socket and/or the lamp wiring.

NOTE: Vehicles equipped with optional vanity lamps have a mirror with a lamp that is integral to each sun visor. Each lamp is independently controlled by an integral switch that is automatically actuated by the mirror cover. The bulb types and service procedures are identical for both of these lamps.

(1) Using small needle-nose pliers, carefully grasp the vanity lamp bulb and align the base of the bulb with the socket in the lamp housing of the sun visor (Fig. 14).

(2) Push the bulb base straight into the socket until the base is fully seated.

(3) Insert one tab on the top or the bottom of the lens into the appropriate slot at the top or the bottom of the lamp housing.

(4) Flex the lens far enough to engage the loose tab into its slot in the lamp housing.

(5) Reconnect the battery negative cable.

MESSAGE SYSTEMS

TABLE OF CONTENTS

page

OVERHEAD CONSOLE
DESCRIPTION 1
OPERATION 1
DIAGNOSIS AND TESTING - OVERHEAD CONSOLE 2
STANDARD PROCEDURE
STANDARD PROCEDURE - MODULE LAMP REPLACEMENT 3
STANDARD PROCEDURE - COURTESY LAMP REPLACEMENT 3
STANDARD PROCEDURE - COMPASS CALIBRATION 3
STANDARD PROCEDURE - COMPASS DEMAGNETIZING 4
STANDARD PROCEDURE - COMPASS VARIATION ADJUSTMENT 4
STANDARD PROCEDURE - ELECTRONIC VEHICLE INFORMATION CENTER PROGRAMMING 5
REMOVAL
OVERHEAD CONSOLE - REMOVAL 8
INSTALLATION 8
SPECIAL TOOLS 8
ELECTRONIC VEHICLE INFO CENTER
DESCRIPTION 8
OPERATION 10
DIAGNOSIS AND TESTING - ELECTRONIC VEHICLE INFORMATION CENTER 10
REMOVAL 11
INSTALLATION 11
UNIVERSAL TRANSMITTER
DESCRIPTION 12
OPERATION 12
DIAGNOSIS AND TESTING - UNIVERSAL TRANSMITTER 12
STANDARD PROCEDURE
STANDARD PROCEDURE - ERASING TRANSMITTER CODES 13
STANDARD PROCEDURE - PROGRAMMING TRANSMITTER CODES . . . 13
AMBIENT TEMP SENSOR
DESCRIPTION 14
OPERATION 14
DIAGNOSIS AND TESTING
DIAGNOSIS AND TESTING - AMBIENT TEMPERATURE SENSOR 14
DIAGNOSIS AND TESTING - AMBIENT TEMPERATURE SENSOR CIRCUIT 14
REMOVAL 15
INSTALLATION 15

OVERHEAD CONSOLE

DESCRIPTION

An overhead console is standard factory-installed equipment on this model. The overhead console includes an Electronic Vehicle Information Center Module with (Fig. 1) or without (Fig. 2) a universal transmitter. All overhead consoles are equipped with two reading and courtesy lamps. On vehicles equipped with a power sunroof, the sunroof switch is located between the two reading and courtesy lamps. The overhead console is mounted with one screw in the front and two snap clips in the rear. A molded plastic retainer bracket located above the headliner is used to provide secure overhead console attachment.

If any of the EVIC functions are faulty or damaged, the complete EVIC module must be replaced. Replaceable overhead console components include the incandescent bulbs used for push button back-lighting, courtesy lamps, lens, EVIC module and the overhead console housing. Refer to the Standard Procedures in this section for additional information.

OPERATION

Refer to the vehicle Owner's Manual for specific operation of overhead console and its systems.

OVERHEAD CONSOLE (Continued)

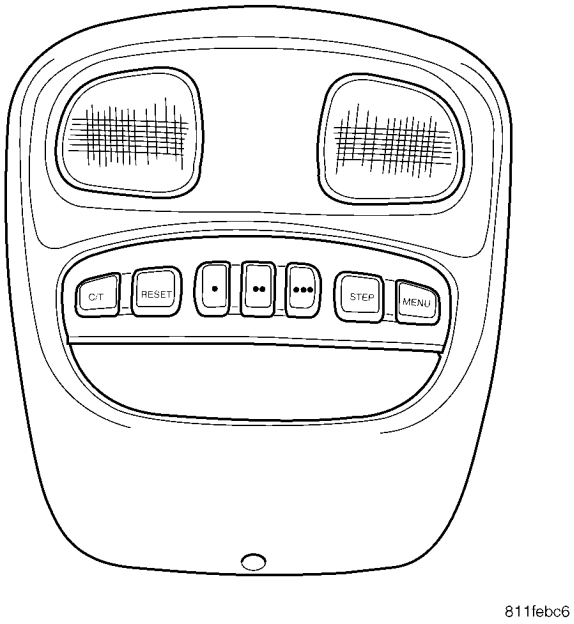

Fig. 1 OVERHEAD CONSOLE WITH UNIVERSAL TRANSMITTER

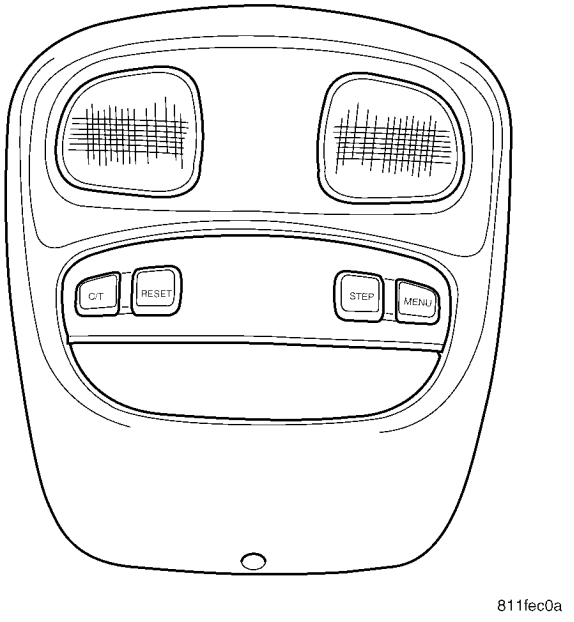

Fig. 2 OVERHEAD CONSOLE WITHOUT UNIVERSAL TRANSMITTER

DIAGNOSIS AND TESTING - OVERHEAD CONSOLE

The most reliable, efficient, and accurate means to diagnose the overhead console or related system requires the use of a DRB III® scan tool and the Service and Body Diagnostic Procedures Manuals. The DRB III® scan tool can provide vital information to the technician trying to find a problem with a overhead console component. Diagnostic logic is built into the overhead console mounted module to help the person trying to locate the problem by the most efficient means possible. Anytime a problem is suspected, a DRB III® scan tool must be obtained and used to retrieve any stored fault codes in the module. If diagnostic fault codes are present in the module, record them on a piece of paper immediately before proceeding any further. Then, use these fault codes to identify the problem by verifying the fault code. Example, If the module records "**TIRE PRESSURE N/A**" fault, locate the diagnostic procedure for this code in the appropriate Body Diagnostic Procedures Manual and follow the flow chart until the specific problem is located and resolved. Once the problem is thought to be corrected, erase the stored fault code using the DRB III® scan tool and verify correct system operation. If the tire pressure monitoring system is functioning correctly, verify that there are no other stored codes in the module and return the vehicle to service.

If the fault code could not be verified, such as not finding anything wrong when following the diagnostic flow chart in the Body Diagnostic Procedures Manual. This is a good indication that an INTERMITTENT problem may be present. You must than attempt to find the intermittent problem, such as running a tire pressure monitoring system self test. Refer to the Tires/Wheels section for more information. Always, eliminate all other potential problems before attempting to replace the module.

TESTING VOLTAGE AND GROUND SUPPLY TO OVERHEAD CONSOLE

(1) Remove the overhead console from the headliner (Refer to 8 - ELECTRICAL/OVERHEAD CONSOLE - REMOVAL) Disconnect the overhead console electrical connector. Check the fused B(+) circuit in the overhead console electrical connector. If OK, go to Step 2. If not OK, repair the open circuit or component as required. Refer to the Wiring section for detailed schematics.

(2) Check the IGN RUN B(+) circuit in the overhead console electrical connector. If OK, go to Step 3. If not OK, repair the open IGN RUN B(+) circuit as required.

(3) Check the Ground circuit in the overhead console electrical connector. If OK, go to Step 4. If not OK, repair the open ground circuit as required.

(4) If the tire pressure monitoring system is not operating properly, refer to the Tires/Wheels section for more information on the tire pressure monitoring system.

OVERHEAD CONSOLE (Continued)

NOTE: If the compass functions, but accuracy is suspect, it may be necessary to perform a variation adjustment. This procedure allows the compass unit to accommodate variations in the earth's magnetic field strength, based on geographic location. Refer to Compass Variation Adjustment in the Standard Procedures section of this group.

NOTE: If the compass reading displays dashes, and only "CAL" appears in the display, demagnetizing may be necessary to remove excessive residual magnetic fields from the vehicle. Refer to Compass Demagnetizing in the Standard Procedures section of this group.

STANDARD PROCEDURE

STANDARD PROCEDURE - MODULE LAMP REPLACEMENT

(1) Remove the overhead console.

(2) Using a flat blade screwdriver twist out socket/lamp (Fig. 3).

(3) Replace lamp(s) as necessary.

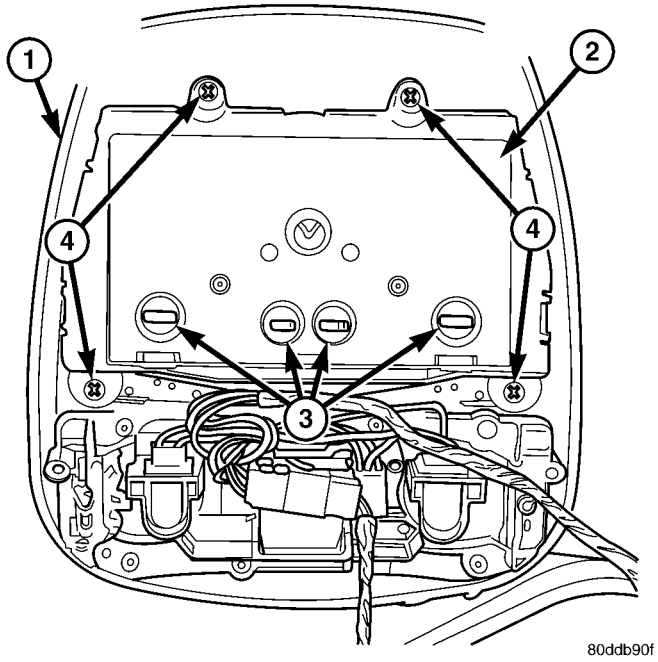

Fig. 3 ELECTRONIC VEHICLE INFORMATION CENTER REMOVE/INSTALL

1 - OVERHEAD CONSOLE HOUSING
2 - EVIC/CMTC MODULE
3 - ILLUMINATION LAMPS
4 - MODULE RETAINING SCREWS

STANDARD PROCEDURE - COURTESY LAMP REPLACEMENT

(1) Open hood, disconnect and isolate the negative battery cable.

(2) Remove the overhead console from the headliner.

(3) Remove the lamp and socket assembly from the overhead console.

(4) Remove the lamp bulb by pulling it straight out of its socket.

STANDARD PROCEDURE - COMPASS CALIBRATION

CAUTION: Do not place any external magnets, such as magnetic roof mount antennas, in the vicinity of the compass. Do not use magnetic tools when servicing the overhead console.

The electronic compass unit features a self-calibrating design, which simplifies the calibration procedure. This feature automatically updates the compass calibration while the vehicle is being driven. This allows the compass unit to compensate for small changes in the residual magnetism that the vehicle may acquire during normal use. If the compass readings appear to be erratic or out of calibration, perform the following calibration procedure. Also, new replacement Electronic Vehicle Information Center (EVIC) modules must have their compass calibrated using this procedure. Do not attempt to calibrate the compass near large metal objects such as other vehicles, large buildings, or bridges; or, near overhead or underground power lines.

Calibrate the compass manually as follows:

(1) Turn the ignition switch to the On position. If the compass/thermometer data is not currently being displayed, momentarily depress and release the C/T push button to reach the compass/thermometer display.

(2) Depress the Reset push button and hold the button down until "CAL" appears in the display. This takes about ten seconds, and appears about five seconds after "VARIANCE = XX" is displayed.

(3) Release the Reset push button.

(4) Drive the vehicle on a level surface, away from large metal objects and power lines, through three or more complete circles at between five and eight kilometers-per-hour (three and five miles-per-hour) in not less than 48 seconds. The "CAL" message will disappear from the display to indicate that the compass is now calibrated.

OVERHEAD CONSOLE (Continued)

NOTE: If the "CAL" message remains in the display, either there is excessive magnetism near the compass, or the unit is faulty. Repeat the calibration procedure one more time.

NOTE: If the wrong direction is still indicated in the compass display, the area selected for calibration may be too close to a strong magnetic field. Repeat the calibration procedure in another location.

STANDARD PROCEDURE - COMPASS DEMAGNETIZING

A degaussing tool (Special Tool 6029) is used to demagnetize, or degauss, the overhead console forward mounting screw and the roof panel above the overhead console. Equivalent units must be rated as continuous duty for 110/115 volts and 60 Hz. They must also have a field strength of over 350 gauss at 7 millimeters (0.25 inch) beyond the tip of the probe.

To demagnetize the roof panel and the overhead console forward mounting screw, proceed as follows:

(1) Be certain that the ignition switch is in the Off position, before you begin the demagnetizing procedure.

(2) Connect the degaussing tool (Fig. 4) to an electrical outlet, while keeping the tool at least 61 centimeters (2 feet) away from the compass unit.

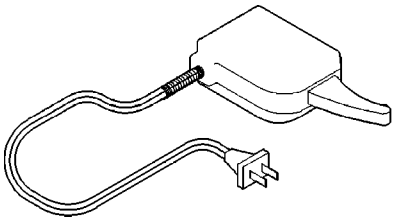

Fig. 4 DEGAUSSING TOOL 6029

(3) Slowly approach the head of the overhead console forward mounting screw with the degaussing tool connected.

(4) Contact the head of the screw with the plastic coated tip of the degaussing tool for about two seconds.

(5) With the degaussing tool still energized, slowly back it away from the screw. When the tip of the tool is at least 61 centimeters (2 feet) from the screw head, disconnect the tool.

(6) Place a piece of paper approximately 22 by 28 centimeters (8.5 by 11 inches), oriented on the vehicle lengthwise from front to rear, on the center line of the roof at the windshield header (Fig. 5). The purpose of the paper is to protect the roof panel from scratches, and to define the area to be demagnetized.

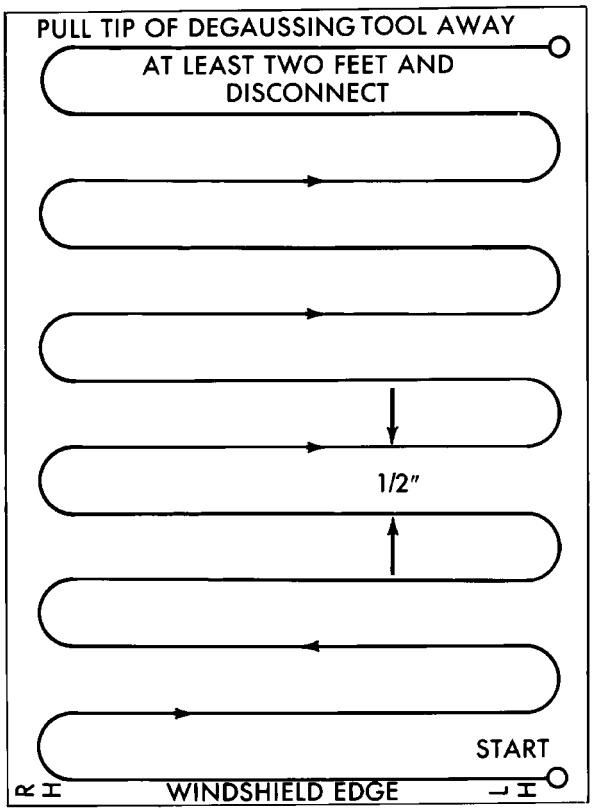

Fig. 5 ROOF DEMAGNETIZING PATTERN

(7) Connect the degaussing tool to an electrical outlet, while keeping the tool at least 61 centimeters (2 feet) away from the compass unit.

(8) Slowly approach the center line of the roof panel at the windshield header, with the degaussing tool connected.

(9) Contact the roof panel with the plastic coated tip of the degaussing tool. Be sure that the template is in place to avoid scratching the roof panel. Using a slow, back-and-forth sweeping motion, and allowing 13 millimeters (0.50 inch) between passes, move the tool at least 11 centimeters (4 inches) to each side of the roof center line, and 28 centimeters (11 inches) back from the windshield header.

(10) With the degaussing tool still energized, slowly back it away from the roof panel. When the tip of the tool is at least 61 centimeters (2 feet) from the roof panel, disconnect the tool.

(11) Calibrate the compass and adjust the compass variance.

STANDARD PROCEDURE - COMPASS VARIATION ADJUSTMENT

Compass variance, also known as magnetic declination, is the difference in angle between magnetic north and true geographic north. In some geographic

OVERHEAD CONSOLE (Continued)

locations, the difference between magnetic and geographic north is great enough to cause the compass to give false readings. If this problem occurs, the compass variance setting may need to be changed.

To set the compass variance:

(1) Using the Variance Settings map, find your geographic location and note the zone number (Fig. 6) or (Fig. 7).

(2) Turn the ignition switch to the On position. If the compass/thermometer data is not currently being displayed, momentarily depress and release the C/T push button to reach the compass/thermometer display.

(3) Depress the Reset push button and hold the button down until “VARIANCE = XX” appears in the display. This takes about five seconds.

(4) Release the Reset push button. “VARIANCE =XX ” will remain in the display. “XX” equals the current variance zone setting.

(5) Momentarily depress and release the Step push button to step through the zone numbers, until the zone number for your geographic location appears in the display.

(6) Momentarily depress and release the Reset push button to enter the displayed zone number into the EVIC module memory.

(7) Confirm that the correct directions are now indicated by the compass.

STANDARD PROCEDURE - ELECTRONIC VEHICLE INFORMATION CENTER PROGRAMMING

EVIC PROGRAMMING MODE

The Electronic Vehicle Information Center (EVIC) provides the vehicle operator with a user interface, which allows the selection of several optional customer programmable electronic features to suit individual preferences. The EVIC must be placed into its programming mode in order to view or change the programmable features. To enter the EVIC programming mode and to view or change the selected programmable features options, proceed as follows:

(1) Turn the ignition switch to the On position.

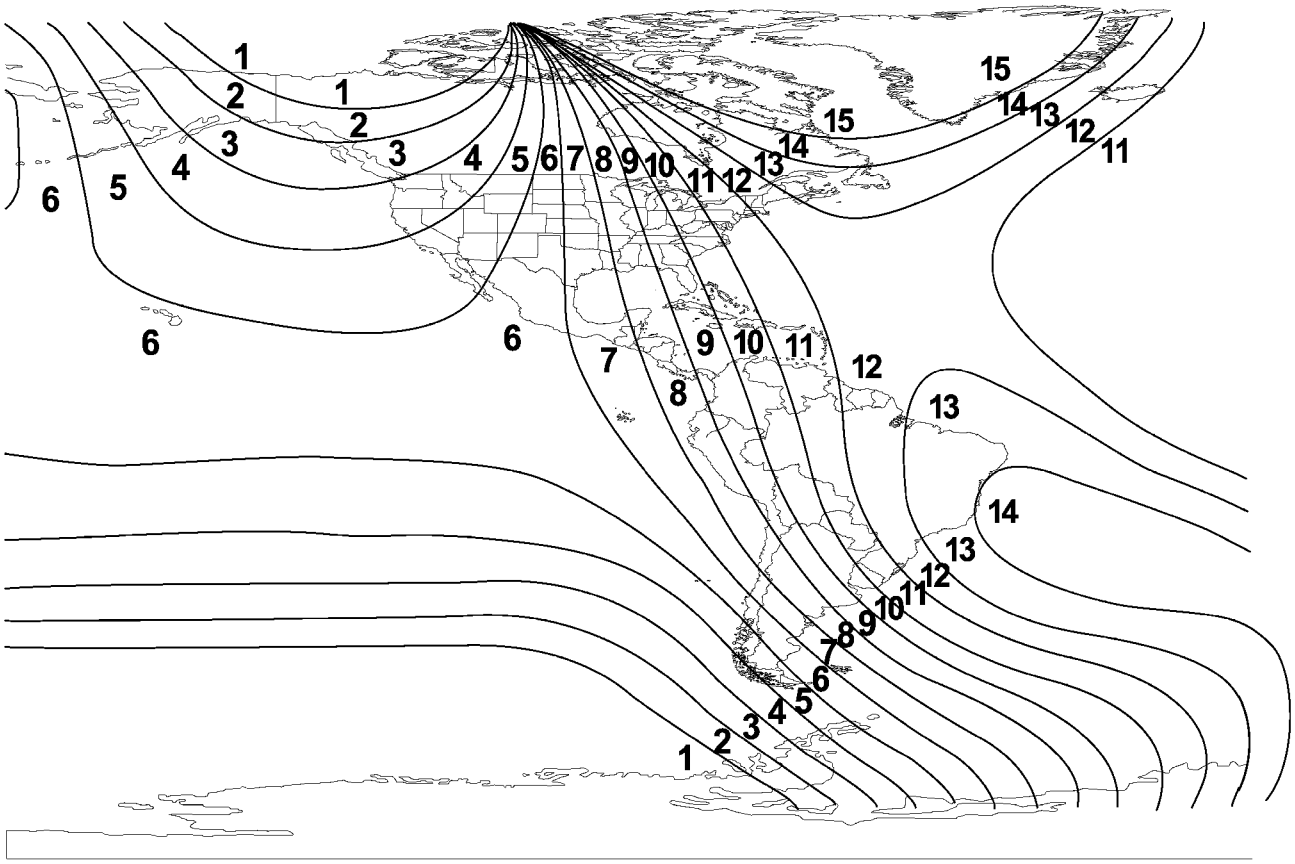

811994c8

Fig. 6 VARIANCE SETTINGS - NORTH/SOUTH AMERICA REGION

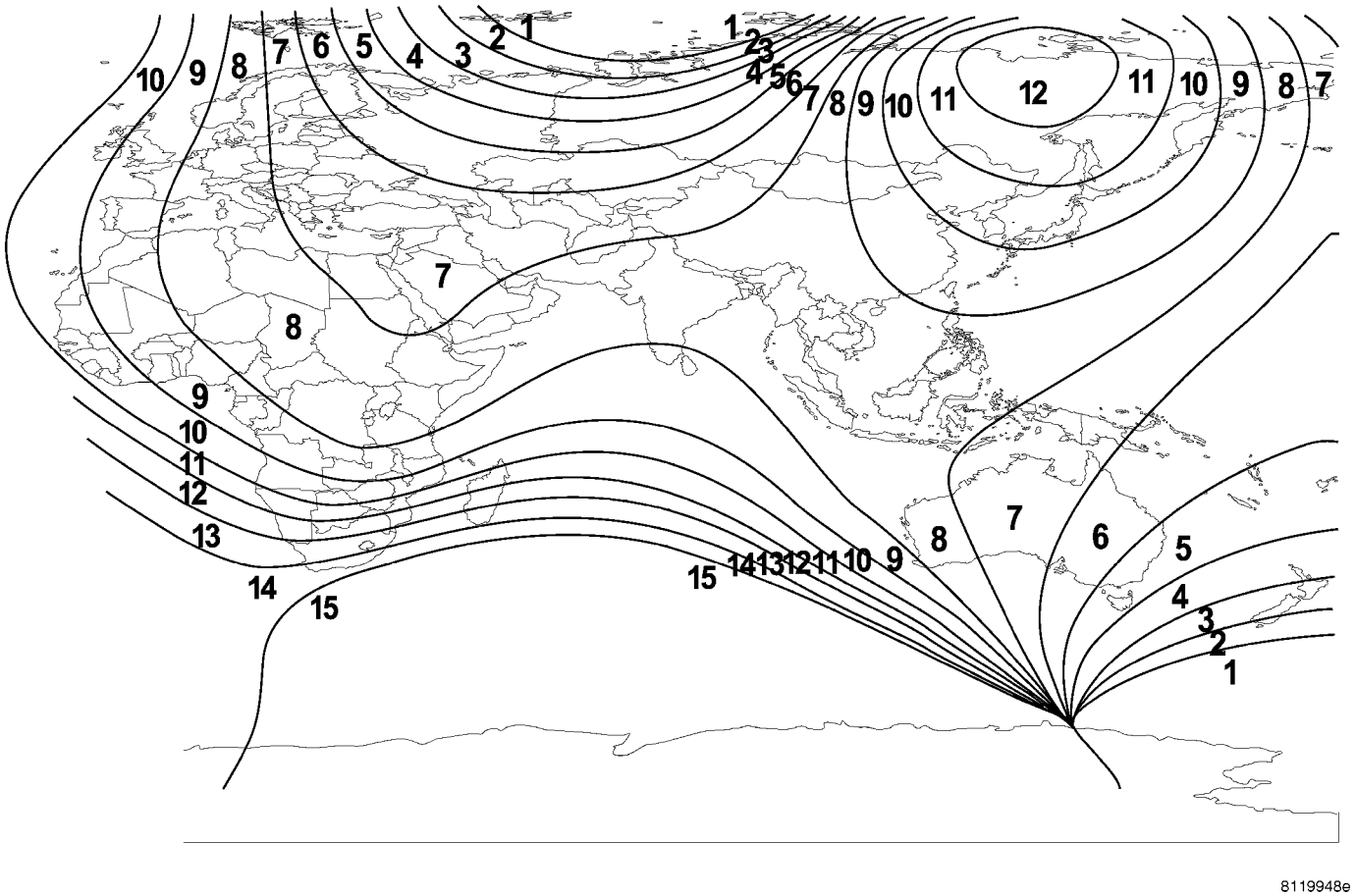

Fig. 7 VARIANCE SETTINGS - EXPORT REGION

(2) Depress and release the Menu push button. The first item in the programmable features menu list will appear in the EVIC display.

(3) Momentarily depress and release the Menu push button to step through the programmable features list. Each programmable feature and its currently selected option will appear on the EVIC display in the sequence shown in the Programmable Features list that follows.

(4) Momentarily depress and release the Step push button to step through the available options for the programmable feature being displayed.

(5) The option that last appears in the display with a programmable feature before exiting the programming mode, becomes the newly selected programmable feature option.

(6) The EVIC exits the programming mode and returns to its normal operating mode when the C/T push button is depressed or when the end of the programmable features menu list is reached, whichever occurs first.

PROGRAMMABLE FEATURES

- **LANGUAGE?** - The options include English, Francais, Deutsch, Italiana, or Espanol. The default is English. All EVIC display nomenclature, including the trip computer functions, warning messages and the programmable features appear in the selected language.
- **DISPLAY U.S. OR METRIC?** - The options include U.S. and M. The default is U.S. This feature toggles the trip computer temperature, fuel economy and odometer display readings between U.S. and metric units of measure. It also changes the odometer display in the instrument cluster.
- **AUTO DOOR LOCKS?** - The options include Yes and No. The default is Yes. When Yes is selected, all doors lock automatically when vehicle speed reaches 25 kilometers-per-hour (15 miles-per-hour). If YES is selected, a second programmable feature appears, **AUTO UNLOCK ON EXIT?** - The options again include Yes and No. The default is No. When Yes is selected, following each Auto Door Lock event all doors will automatically unlock when the driver door is opened, if the vehicle is stopped and the transmission gear selector is in Park or Neutral. The

OVERHEAD CONSOLE (Continued)

Auto Door Unlock event will only occur once following each Auto Door Lock event.

• **REMOTE UNLOCK** - The options include Driver Door 1st and All Doors. The default is Driver Door 1st. When Diver Door 1st is selected, only the driver door unlocks when the Unlock button of the Remote Keyless Entry (RKE) transmitter is depressed once. The Unlock button of the RKE transmitter must be depressed twice to unlock all doors. When All Doors is selected, all doors unlock when the Unlock button of the RKE transmitter is depressed once.

• **SOUND HORN ON LOCK?** - The options include Yes and No. The default is No. When Yes is selected, a short horn chirp will provide an audible confirmation when the RKE receiver recognizes a valid Lock signal from an RKE transmitter. When No is selected, no horn chirp will occur with the RKE Lock event. This feature may be selected independent of the **FLASH LIGHTS WITH LOCKS?** programmable feature.

• **FLASH LIGHTS WITH LOCKS?** - The options include Yes and No. The default is Yes. When Yes is selected, a single flash of the hazard warning lamps will provide an optical confirmation when the RKE receiver recognizes a valid Lock signal from an RKE transmitter, and two flashes of the same lamps will occur when the RKE receiver recognizes a valid Unlock signal from an RKE transmitter. When No is selected, no lamp flash will occur with the RKE Lock or Unlock event. This feature may be selected independent of the **SOUND HORN ON LOCK?** programmable feature.

• **HEADLAMP DELAY =** - The options include Off, 30 Sec, 60 Sec, and 90 Sec. The default is 90 Sec. When a time interval is selected, the headlamps will remain on for that length of time when the headlamps are turned off after the ignition is turned off, or if the Auto mode is selected on vehicles with the Auto Headlamps option. When Off is selected, the headlamp delay feature is disabled.

• **SERVICE INTERVAL =** - The options will vary depending on the market and engine: US/GAS engine - the options include from 2000 to 6000 miles in 500 mile increments (3200 to 9600 kilometers in 800 kilometer increments). The default is 6000 miles (9600 kilometers). The selected distance becomes the interval at which the Perform Service warning message will be displayed by the EVIC. BUX/GAS engine - the options include from 2000 to 7500 miles in 500 mile increments (3200 to 12000 kilometers in 800 kilometer increments). The default is 7500 miles (12000 kilometers). The selected distance becomes the interval at which the Perform Service warning message will be displayed by the EVIC. BUX/DIESEL engine - the options include 3125, 6250, 9375, 12500 miles (5, 10, 15, 20 kilometers). The default is 12500 miles (20 kilometers). The selected distance becomes the interval at which the Perform Service warning message will be displayed by the EVIC. If a new distance is selected, a second programmable feature appears, **RESET SERVICE DISTANCE?** - The options include No and Yes. The default is Yes. When Yes is selected, the accumulated distance since the last previous Perform Service warning message will be reset to zero because the service interval has been changed. When No is selected, the distance until the next Perform Service warning message is reduced by the accumulated distance since the last previous message.

• **TRAIN REMOTE** - When this feature is selected the driver can choose to train up to four remote keyless entry transmitters. The options include Yes and No. The default is No. When Yes is selected and the MENU button is pressed the EVIC will display “PRESS A VALID FOB KEY”. Follow the directions displayed in the EVIC, you have approximately 30 seconds to train each transmitter, after each transmitter is trained the EVIC will display “FOB #? TRAINED”.

• **RETRAIN TIRE SENSORS** - This programmable feature only applies to vehicles equipped with the optional Tire Pressure Monitoring System. The options include Yes and No. The default is No. When Yes is selected, and the MENU button is depressed, the EVIC will enter the training mode starting with the left front tire. Refer to the tires and wheels section for additional information.

OVERHEAD CONSOLE (Continued)

REMOVAL

OVERHEAD CONSOLE - REMOVAL

(1) Disconnect and isolate the negative battery cable.

(2) Remove the overhead console retaining screw (Fig. 8) , located in the front of console near the windshield.

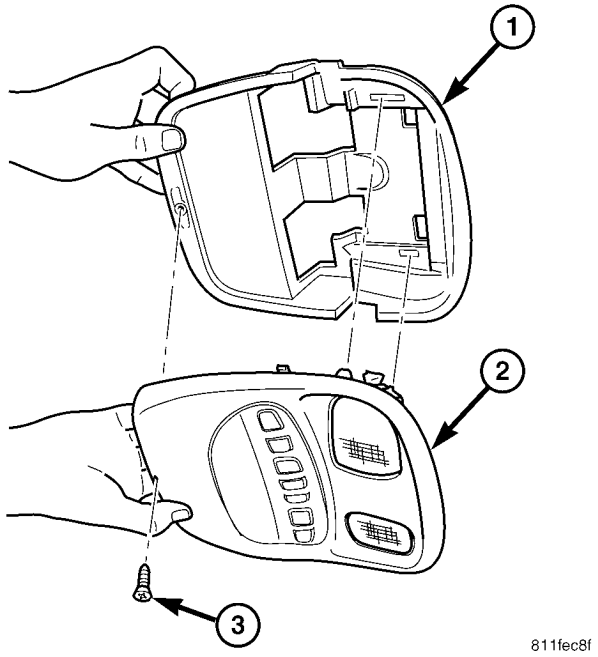

Fig. 8 OVERHEAD CONSOLE REMOVAL/ INSTALLATION

1 - HEADLINER BRACKET
2 - OVERHEAD CONSOLE
3 - SCREW

(3) Using your fingertips, grasp the sides of the overhead console and pull straight down evenly to disengage the two snap clips at the rear of the unit.

(4) Lower the overhead console far enough to access the wire harness connectors.

(5) Disconnect the control module, courtesy lamps and power sunroof switch electrical connectors, if equipped.

(6) Remove the overhead console assembly from the vehicle.

INSTALLATION

(1) Position the overhead console in the vehicle and connect the wire harness connectors.

(2) Connect the control module, courtesy lamps and power sunroof switch electrical connectors, if equipped.

(3) Grasp the sides of the overhead console and push straight up evenly to engage the two snap clips at the rear of the unit.

(4) Install the overhead console retaining screw, located in the front of console near the windshield. Torque the screw to 1.2 N·m (10 in. lbs.).

(5) Connect the negative battery cable.

SPECIAL TOOLS

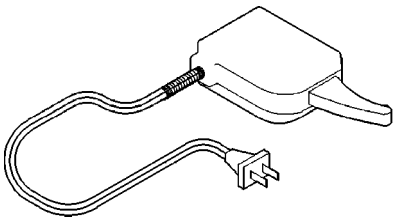

Degaussing Tool 6029

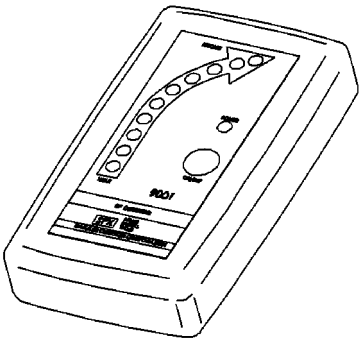

Radio Frequency Detector 9001

ELECTRONIC VEHICLE INFO CENTER

DESCRIPTION

The Electronic Vehicle Information Center (EVIC) module is located in the overhead console on some models. The EVIC module features a large Vacuum Fluorescent Display (VFD) screen for displaying information, and back-lit push button function switches labeled C/T (compass/temperature), RESET, STEP, and MENU (Fig. 9) or (Fig. 10).

The EVIC module contains a central processing unit and interfaces with other electronic modules in the vehicle over the Programmable Communications Interface (PCI) data bus network. The PCI data bus network allows the sharing of sensor information. This helps to reduce wire harness complexity, reduce internal controller hardware, and reduce component sensor current loads. At the same time, this system provides increased reliability, enhanced diagnostics, and allows the addition of many new feature capabilities.

The EVIC includes the following display options:

- **Average Fuel Economy** - provides the average fuel economy the vehicle is achieving.

ELECTRONIC VEHICLE INFO CENTER (Continued)

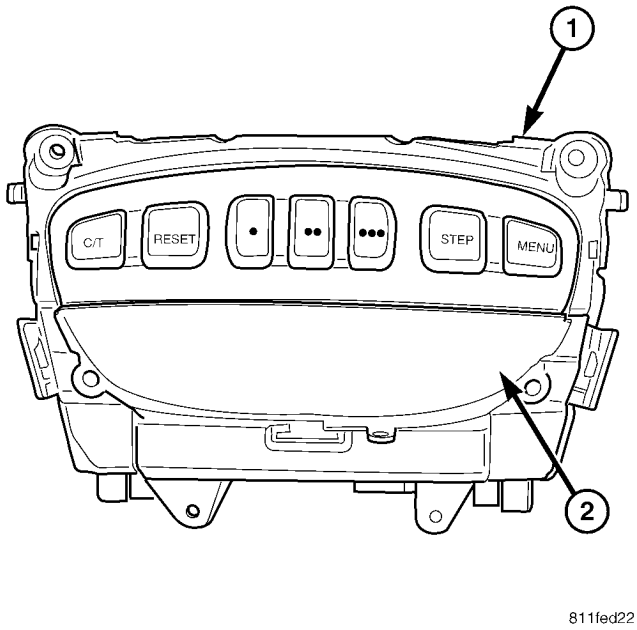

Fig. 9 EVIC MODULE WITH UNIVERSAL TRANSMITTER

1 - EVIC MODULE
2 - DISPLAY LENS

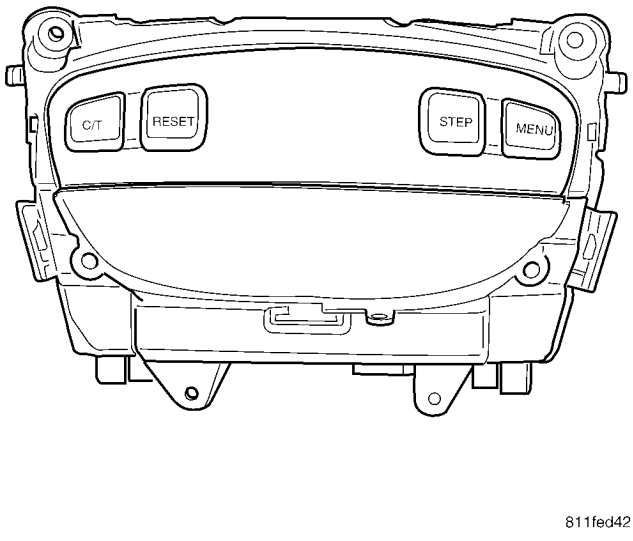

Fig. 10 EVIC MODULE WITHOUT UNIVERSAL TRANSMITTER

- **Distance To Empty** - provides the approximate distance the vehicle can be driven on the current fuel level.
- **Trip Odometer** - shows the accumulated miles since the last trip computer reset.
- **Elapsed time** - shows the accumulated ignition-on time since the last trip computer reset.
- **Service Mileage** - shows the distance remaining until the next scheduled service interval.
- **Individual Tire Pressure** - shows the current individual tire air pressures.
- **Blank** - the EVIC computer VF display is turned off.

The EVIC "Menu" push button provides the vehicle operator with a user interface, which allows the selection of several optional customer programmable electronic features to suit individual preferences. Refer to **ELECTRONIC VEHICLE INFORMATION CENTER PROGRAMMING** in the Service Procedures section of this group for more information on the customer programmable feature options.

If the vehicle is equipped with the optional Universal Transmitter, the EVIC will also display messages and an icon indicating when the Universal Transmitter is being trained, which of the three transmitter buttons is transmitting, and when the transceiver is cleared.

Data input for all EVIC functions, including VFD dimming level, is received through PCI data bus messages. The EVIC module uses its internal programming and all of its data inputs to calculate and display the requested data. If the data displayed is incorrect, perform the self-diagnostic tests as described in this group. If these tests prove inconclusive, the use of a DRB III® scan tool and the proper Diagnostic Procedures manual are recommended for further testing of the EVIC module and the PCI data bus.

The EVIC module cannot be repaired, and is available for service only as a unit. This unit includes the push button switches and the plastic module. If any of these components is faulty or damaged, the complete EVIC module must be replaced. The incandescent bulbs used for EVIC push button back-lighting and the lens are available for service replacement.

DESCRIPTION - COMPASS

While in the compass/temperature mode, the compass will display the direction in which the vehicle is pointed using the eight major compass headings (Examples: north is N, northeast is NE). The self-calibrating compass unit requires no adjusting in normal use. The only calibration that may prove necessary is to drive the vehicle in three complete circles at 5 to 8 kilometers-per-hour (3 to 5 miles-per-hour), on level ground, in not less than forty-eight seconds. This will reorient the compass unit to its vehicle.

The compass unit also will compensate for magnetism the body of the vehicle may acquire during normal use. However, avoid placing anything magnetic

directly on the roof of the vehicle. Magnetic mounts for an antenna, a repair order hat, or a funeral procession flag can exceed the compensating ability of the compass unit if placed on the roof panel. Magnetic bit drivers used on the fasteners that hold the overhead console assembly to the roof header can also affect compass operation. If the vehicle roof should become magnetized, the demagnetizing and calibration procedures found in this group may be required to restore proper compass operation.

DESCRIPTION - TEMPERATURE

The temperature displays the outside ambient temperature in whole degrees. The temperature display can be toggled from Fahrenheit to Celsius by selecting the desired U.S./Metric option from the customer programmable features as described in **ELECTRONIC VEHICLE INFORMATION CENTER PROGRAMMING** in the Service Procedures section of this group. The displayed temperature is not an instant reading of conditions, but an average temperature. It may take the thermometer display several minutes to respond to a major temperature change, such as driving out of a heated garage into winter temperatures.

When the ignition switch is turned to the Off position, the last displayed temperature reading stays in the EVIC unit memory. When the ignition switch is turned to the On position again, the EVIC will display the memory temperature for one minute; then update the display to the current average temperature reading within five minutes if temperature is less than memory.

The temperature function is supported by an ambient temperature sensor. The sensor is mounted outside the passenger compartment near the front and center of the vehicle, and is hard wired to the Powertrain Control Module (PCM). The PCM sends temperature status messages to the EVIC module over the PCI data bus network. The ambient temperature sensor is available as a separate service item.

OPERATION

The EVIC has access to both non-switched and ignition switched sources of battery current so that some of its features remain operational at any time, while others may only operate with the ignition switch in the On position. When the ignition switch is turned to the On position, the EVIC module VFD will return to the last function being displayed before the ignition was turned to the Off position.

The compass/temperature display is the normal EVIC display. With the ignition switch in the On position, momentarily depressing and releasing the C/T (compass/temperature) push button switch will cause the EVIC to return to the compass/temperature display mode from any other mode. While in the compass/temperature display mode, momentarily depressing and releasing the Step push button will step through the available trip computer display options.

The EVIC trip computer features several functions that can be reset. The functions that can be reset are: average fuel economy, trip odometer and elapsed time. With the ignition switch in the On position and with one of the functions of the trip computer that can be reset currently displayed, depressing the Reset push button twice within three seconds will perform a global reset, and all of the trip computer information that can be reset will be reset. With the ignition switch in the On position and the function that is to be reset currently displayed, momentarily depressing and releasing the Reset push button once will perform a local reset, and only the value of the displayed function will be reset to zero. A global or local reset will only occur if the function currently displayed is a function that can be reset. The distance to service function can also be reset by pressing and holding the RESET button for 1 second. Refer to **ELECTRONIC VEHICLE INFORMATION CENTER PROGRAMMING** in the Standard Procedures section of this group for more information on setting the Service Interval.

For more information on the features, control functions and setting procedures for the EVIC module, see the owner's manual in the vehicle glove box.

DIAGNOSIS AND TESTING - ELECTRONIC VEHICLE INFORMATION CENTER

If the problem with the EVIC is an inaccurate or scrambled display, refer to **Self-Diagnostic Test** later in this section. If the problem with the EVIC is incorrect Vacuum Fluorescent Display (VFD) dimming levels, use a DRB scan tool and the proper Diagnostic Procedures manual to test for the correct dimming message inputs being received from the Body Control Module (BCM) over the Programmable Communications Interface (PCI) data bus. If the problem is a no-display condition, use the following procedures. For complete circuit diagrams, refer to **Overhead Console** in Wiring Diagrams.

(1) Press the C/T button.

(2) Check the fused B(+) fuse in the junction block. If OK, go to Step 3. If not OK, repair the shorted circuit or component as required and replace the faulty fuse.

(3) Check for battery voltage at the fused B(+) fuse in the junction block. If OK, go to Step 4. If not OK, repair the open fused B(+) circuit to the fused B(+) fuse in the PDC as required.

(4) Check the fused ignition switch output (run/start) fuse in the junction block. If OK, go to Step 5.

ELECTRONIC VEHICLE INFO CENTER (Continued)

If not OK, repair the shorted circuit or component as required and replace the faulty fuse.

(5) Turn the ignition switch to the On position. Check for battery voltage at the fused ignition switch output (run/start) fuse in the junction block. If OK, go to Step 6. If not OK, repair the open fused ignition switch output (run/start) circuit to the ignition switch as required.

(6) Turn the ignition switch to the Off position. Disconnect and isolate the battery negative cable. Remove the overhead console. Check for continuity between the ground circuit cavity of the roof wire harness connector for the EVIC module and a good ground. There should be continuity. If OK, go to Step 7. If not OK, repair the open ground circuit to ground as required.

(7) Connect the battery negative cable. Check for battery voltage at the fused B(+) circuit cavity of the roof wire harness connector for the EVIC module. If OK, go to Step 8. If not OK, repair the open fused B(+) circuit to the fused B(+) fuse in the junction block as required.

(8) Turn the ignition switch to the On position. Check for battery voltage at the fused ignition switch output (run/start) circuit cavity of the roof wire harness connector for the EVIC module. If OK, refer to **Self-Diagnostic Test** in the Diagnosis and Testing section of this group for further diagnosis of the EVIC module and the PCI data bus. If not OK, repair the open fused ignition switch output (run/start) circuit to the fuse in the junction block as required.

SELF-DIAGNOSTIC TEST

A self-diagnostic test is used to determine that the EVIC module is operating properly, and that all PCI data bus messages are being received for initial operation. Initiate the self-diagnostic test as follows:

(1) With the ignition switch in the Off position, simultaneously depress and hold the **C/T button** and the **Reset button**.

(2) Turn the ignition switch to the On position.

(3) Continue to hold both buttons depressed until the EVIC software version information is displayed, then release both buttons.

(4) Following completion of these tests, the EVIC module will display one of the following messages:

a. **PASS SELF TEST** - Momentarily depress and release the Reset button to return to the compass/temperature/trip computer display mode. The EVIC module is working properly.

b. **FAILED SELF TEST** - The EVIC module has an internal failure. The EVIC module is faulty and must be replaced.

c. **NOT RECEIVING J1850 MESSAGE** - The EVIC module is not receiving proper message input through the PCI data bus. This can result from one or more faulty electronic modules in the vehicle, or from a faulty PCI data bus. The use of a DRB scan tool and the proper Diagnostic Procedures manual are required for further diagnosis.

NOTE: If the compass functions, but accuracy is suspect, it may be necessary to perform a variation adjustment. This procedure allows the compass unit to accommodate variations in the earth's magnetic field strength, based on geographic location. Refer to Compass Variation Adjustment in the Service Procedures section of this group.

NOTE: If the compass reading displays a blank, and only "CAL" appears in the display, demagnetizing may be necessary to remove excessive residual magnetic fields from the vehicle. Refer to Compass Demagnetizing in the Service Procedures section of this group.

REMOVAL

(1) Disconnect and isolate the battery negative cable.

(2) Remove the overhead console from the headliner.

(3) Remove the four screws that secure the Electronic Vehicle Information Center (EVIC) module to the overhead console housing (Fig. 11).

(4) Remove the EVIC module from the overhead console housing.

NOTE: IF THE EVIC MODULE IS BEING REPLACED, THE TIRE PRESSURE MONITORING SYSTEM MUST BE PROGRAMMED. REFER TO THE TIRES/WHEELS SECTION OF THIS MANUAL FOR DETAILED INSTRUCTIONS.

INSTALLATION

(1) Position the EVIC module onto the overhead console housing.

(2) Install and tighten the four screws that secure the EVIC module to the overhead console housing. Tighten the screws to 0.9 N·m (8 in. lbs.).

(3) Install the overhead console onto the headliner.

(4) Reconnect the battery negative cable.

NOTE: IF A NEW EVIC COMPUTER HAS BEEN INSTALLED, THE COMPASS WILL HAVE TO BE CALIBRATED AND THE VARIANCE SET. REFER TO COMPASS VARIATION ADJUSTMENT AND COMPASS CALIBRATION IN THE STANDARD PROCEDURES SECTION OF THIS GROUP FOR DETAILED INSTRUCTIONS.

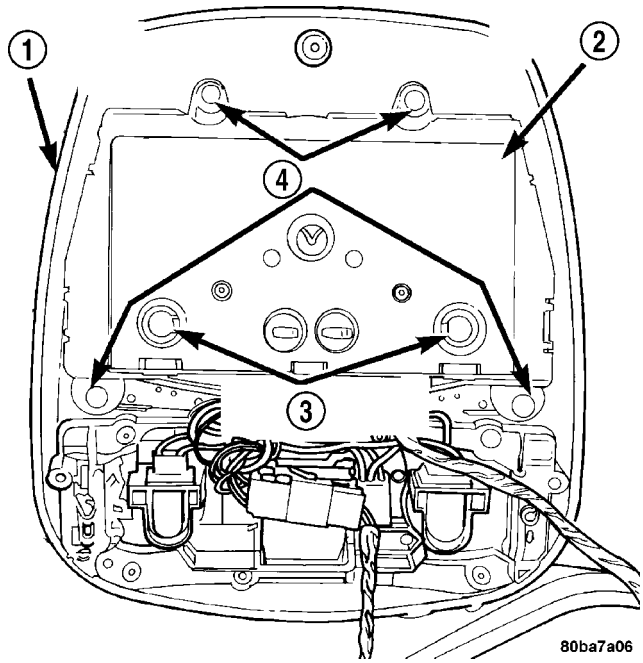

Fig. 11 ELECTRONIC VEHICLE INFORMATION CENTER (EVIC) MODULE

1 - OVERHEAD CONSOLE HOUSING
2 - EVIC MODULE
3 - ILLUMINATION LAMPS
4 - SCREWS (4)

NOTE: IF A NEW EVIC COMPUTER HAS BEEN INSTALLED, THE TIRE PRESSURE SENSORS WILL HAVE TO BE REPROGRAMMED. REFER TO THE TIRES/WHEELS SECTION OF THIS MANUAL FOR DETAILED INSTRUCTIONS.

UNIVERSAL TRANSMITTER

DESCRIPTION

On some KJ models a Universal Transmitter transceiver is standard factory-installed equipment. The universal transmitter transceiver is integral to the Electronic Vehicle Information Center Computer (EVIC), which is located in the overhead console. The only visible component of the universal transmitter are the three center transmitter push buttons centered between the four EVIC push buttons located just rearward of the EVIC display screen in the overhead console. The three universal transmitter push buttons are identified with one, two or three light indicators so that they be easily identified by sight.

Each of the three universal transmitter push buttons controls an independent radio transmitter channel. Each of these three channels can be trained to transmit a different radio frequency signal for the remote operation of garage door openers, motorized gate openers, home or office lighting, security systems or just about any other device that can be equipped with a radio receiver in the 286 to 399 MegaHertz (MHz) frequency range for remote operation. The universal transmitter is capable of operating systems using either rolling code or non-rolling code technology.

The EVIC module displays messages and a small house-shaped icon with one, two or three dots corresponding to the three transmitter buttons to indicate the status of the Universal Transmitter.

The Universal Transmitter cannot be repaired, and is available for service only as a unit with the EVIC module. This unit includes the push button switches and the plastic module and display lens. If any of these components is faulty or damaged, the complete EVIC module must be replaced.

OPERATION

The universal transmitter operates on a non-switched source of battery current so the unit will remain functional, regardless of the ignition switch position. For more information on the features, programming procedures and operation of the universal transmitter, see the owner's manual in the vehicle glove box.

DIAGNOSIS AND TESTING - UNIVERSAL TRANSMITTER

If the Universal Transmitter is inoperative, but the Electronic Vehicle Information Center Computer (EVIC) is operating normally, see the owner's manual in the vehicle glove box for instructions on training the universal transmitter. Retrain the universal transmitter with a known good transmitter as instructed in the owner's manual and test the universal transmitter operation again. If the unit is still inoperative, test the universal transmitter with Radio Frequency Detector special tool (Fig. 12) as described below:

(1) Turn the Radio Frequency (RF) Detector ON. A "chirp" will sound and the green power LED will light. If the green LED does not light, replace the battery.

(2) Hold the RF detector within one inch of the TRAINED universal transmitter and press any of the transmitters buttons.

(3) The red signal detection LEDs will light and the tool will beep if a radio signal is detected. Repeat this test three times.

If both the universal transmitter and the EVIC module are inoperative, refer to **Diagnosis and Testing the Electronic Vehicle Information Center (EVIC)** in this section for further diagnosis. For complete circuit diagrams, refer to **Wiring Diagrams**.

UNIVERSAL TRANSMITTER (Continued)

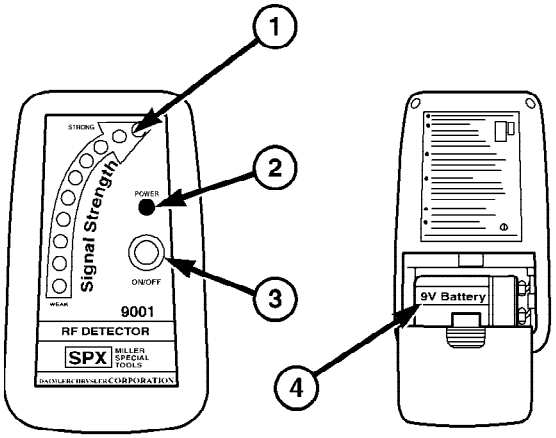

Fig. 12 RADIO FREQUENCY DETECTOR

1 - SIGNAL DETECTION LED'S
2 - POWER LED
3 - ON/OFF SWITCH
4 - 9V BATTERY

STANDARD PROCEDURE

STANDARD PROCEDURE - ERASING TRANSMITTER CODES

To erase **all** universal transmitter codes, simply hold down buttons 1 and 3 until the two green dots below the house symbol begin to flash and "CHANNELS CLEARED" is displayed.

NOTE: Individual channels cannot be erased. Erasing the transmitter codes will erase ALL programmed codes.

STANDARD PROCEDURE - PROGRAMMING TRANSMITTER CODES

WARNING: Before programming the universal transmitter to a garage door opener or gate operator, make sure that people and objects are out of the way of the device to prevent potential harm or damage. When programming a garage door opener, it is advised to park outside of the garage. Do not use universal transmitter with any garage door opener that lacks safety stop and reverse features as required by U.S. federal safety standards (this includes any garage door opener model manufactured before April 1, 1982). A garage door that cannot detect an object - signaling the door to stop and reverse - does not meet current U.S. federal safety standards.

WARNING: Your motorized door or gate will open and close while you are programming. Do not program the universal transmitter if people or pets are in the path of the door or gate. A moving door or gate can cause serious injury or death to people and pets or damage to objects.

NOTE: It is recommended that a new battery be placed in the hand-held transmitter of the device being programmed to the universal transmitter for quicker training and accurate transmission of the radio frequency signal.

(1) Turn off the engine.

(2) Erase the factory test codes by pressing buttons 1 and 3. Release the buttons when the two green lights begin to flash (about 20 seconds).

(3) Choose one of the three buttons to train. Position the end of your hand-held transmitter 1-3 inches (5-14 cm) away from the lower left corner of the EVIC display while keeping the display in view.

(4) Simultaneously press and hold both the desired Transmitter button and the hand-held transmitter button. After a short time, the message TRAINING will show on Transmitter display. **Do not release the buttons until the message TRAINED appears on the display (this may take as long as 60 seconds), release both the Transmitter and hand-held transmitter buttons.**

(5) Press and hold the just-trained Transmitter button. TRANSMIT should appear on the display. If your device activates when the Transmitter button is depressed and released, programming is complete. To train the other buttons, repeat the process. Be sure to keep your hand-held transmitter in case you need to retrain the universal transmitter.

NOTE: If the message TRANSMIT appears on the Transmitter display but your device does not activate, the device may be equipped with a ″rolling code″ system. Continue with steps six through eight below to complete the programming of a rolling code equipped device (most commonly a garage door opener).

(6) At the garage door opener receiver (motor-head unit) in the garage, locate the ″learn″ or ″smart″ button. This can usually be found where the hanging antenna wire is attached to the motor-head unit. Firmly press and release the ″learn″ or ″smart″ button. (The name and color of the button may vary by manufacturer.)

UNIVERSAL TRANSMITTER (Continued)

NOTE: There are 30 seconds in which to initiate the next step.

(7) Return to the vehicle and firmly press, hold for two seconds and release the programmed Transmitter button. Repeat the "press/hold/release" sequence a second time, and, depending on the brand of the garage door opener (or other rolling code equipped device), repeat this sequence a third time to complete the programming process.

(8) Transmitter should now activate your rolling code equipped device. To program the remaining two buttons, simply repeat the process.

AMBIENT TEMP SENSOR

DESCRIPTION

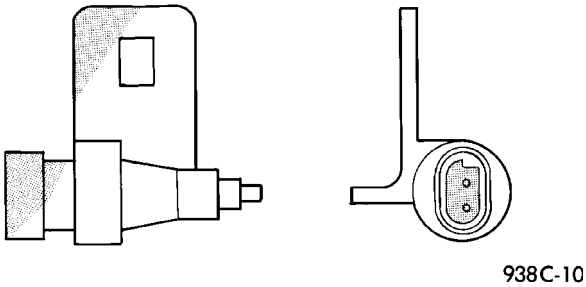

Fig. 13 AMBIENT TEMPERATURE SENSOR

Ambient air temperature is monitored by the Electronic Vehicle Information Center Computer (EVIC) through ambient temperature sensor messages received from the Powertrain Control Module (PCM) over the Programmable Communications Interface (PCI) data bus network. The PCM receives a hard wired input from the ambient temperature sensor. The ambient temperature sensor (Fig. 13) is a variable resistor mounted in front the radiator, behind the grille, near the center of the vehicle.

Refer to **Powertrain Control Module (PCM)** in Electronic Control Modules for more information. For complete circuit diagrams, refer to the Wiring information. The ambient temperature sensor cannot be adjusted or repaired and, if faulty or damaged, it must be replaced.

OPERATION

The ambient temperature sensor is a variable resistor that operates on a five-volt reference sent to it by the Powertrain Control Module (PCM). The resistance in the sensor changes as temperature changes. This changes the temperature sensor return signal circuit voltage to the PCM. Based upon the resistance in the sensor, the PCM is programmed to correspond to a specific temperature. The PCM then sends the proper ambient temperature messages to the EVIC over the PCI data bus.

The thermometer function is supported by the ambient temperature sensor, a wiring circuit, the Powertrain Control Module (PCM), the Programmable Communications Interface (PCI) data bus, and a portion of the Electronic Vehicle Information Center (EVIC) Computer module.

The ambient temperature sensor circuit can also be diagnosed by referring to **Diagnosis and Testing - Ambient Temperature Sensor, and Diagnosis and Testing - Ambient Temperature Sensor Circuit**. If the temperature sensor and circuit are confirmed to be OK, but the temperature display is inoperative or incorrect, refer to **Diagnosis and Testing - Electronic Vehicle Information Center Computer** in this section. For complete circuit diagrams, refer to the Wiring information.

DIAGNOSIS AND TESTING

DIAGNOSIS AND TESTING - AMBIENT TEMPERATURE SENSOR

(1) Turn the ignition switch to the Off position. Disconnect and isolate the battery negative cable. Disconnect the ambient temperature sensor wire harness connector.

(2) Measure the resistance of the ambient temperature sensor. At room temperature (approx. 68°F), the sensor resistance should be between 10-13 Kilohms (10000-13000 ohms). The sensor resistance should be between these two values at 68°F. If OK, the sensor is OK at this time. If not OK, replace the faulty ambient temperature sensor.

DIAGNOSIS AND TESTING - AMBIENT TEMPERATURE SENSOR CIRCUIT

(1) Turn the ignition switch to the Off position. Disconnect and isolate the battery negative cable. Disconnect the ambient temperature sensor wire harness connector and the Powertrain Control Module (PCM) wire harness connector.

(2) Connect a jumper wire between the two terminals in the body half of the ambient temperature sensor wire harness connector.

(3) Check for continuity between the sensor return circuit and the ambient temperature sensor signal circuit cavities of the PCM wire harness connector. There should be continuity. If OK, go to Step 4. If not OK, repair the open sensor return circuit or ambient temperature sensor signal circuit to the ambient temperature sensor as required.

(4) Remove the jumper wire from the body half of the ambient temperature sensor wire harness con-

AMBIENT TEMP SENSOR (Continued)

nector. Check for continuity between the sensor return circuit cavity of the PCM wire harness connector and a good ground. There should be no continuity. If OK, go to Step 5. If not OK, repair the shorted sensor return circuit as required.

(5) Check for continuity between the ambient temperature sensor signal circuit cavity of the PCM wire harness connector and a good ground. There should be no continuity. If OK, refer to **Diagnosis and Testing - Electronic Vehicle Information Center Computer** in this group. If not OK, repair the shorted ambient temperature sensor signal circuit as required.

REMOVAL

(1) Open hood, disconnect and isolate the negative battery cable.

(2) Remove the grille from the vehicle.

(3) Disconnect the ambient temperature sensor electrical connector.

(4) Remove the ambient temperature sensor retaining screw and remove the sensor from the vehicle.

INSTALLATION

(1) Position the ambient temperature sensor and install the retaining screw.

(2) Connect the ambient temperature sensor electrical connector.

(3) Install the grille on the vehicle.

(4) Connect the negative battery cable.

POWER SYSTEMS

TABLE OF CONTENTS

page

POWER LOCKS 1
POWER MIRRORS 10
POWER SEATS 15
POWER TOP - SUNROOF 22
POWER WINDOWS 29

POWER LOCKS

TABLE OF CONTENTS

page

POWER LOCKS
DESCRIPTION 1
OPERATION 3
DIAGNOSIS AND TESTING - POWER LOCKS . . 3
DOOR LOCK / UNLOCK SWITCH
DIAGNOSIS AND TESTING - DOOR LOCK/ UNLOCK SWITCH 4
REMOVAL 4
INSTALLATION 5
DOOR LOCK MOTOR
DESCRIPTION 5
OPERATION 5
DIAGNOSIS AND TESTING - DOOR LOCK MOTOR 5
FLIP-UP GLASS RELEASE SWITCH
DIAGNOSIS AND TESTING - FLIP-UP GLASS RELEASE SWITCH 5
DOOR LOCK RELAY
REMOVAL 6
INSTALLATION 6
REMOTE KEYLESS ENTRY MODULE
DESCRIPTION 6
OPERATION 6
DIAGNOSIS AND TESTING - REMOTE KEYLESS ENTRY MODULE 6
REMOVAL 6
INSTALLATION 6
REMOTE KEYLESS ENTRY TRANSMITTER
DIAGNOSIS AND TESTING - REMOTE KEYLESS ENTRY TRANSMITTER 7
STANDARD PROCEDURE
STANDARD PROCEDURE - RKE TRANSMITTER CUSTOMER PREFERENCES 7
STANDARD PROCEDURE - RKE TRANSMITTER PROGRAMING 7
STANDARD PROCEDURE - RKE TRANSMITTER BATTERIES 8
SPECIFICATIONS - REMOTE KEYLESS ENTRY TRANSMITTER 8
TAILGATE CYLINDER LOCK SWITCH
DESCRIPTION 8
OPERATION 8
DIAGNOSIS AND TESTING - TAILGATE CYLINDER LOCK SWITCH 8
REMOVAL 8
INSTALLATION 9

POWER LOCKS

DESCRIPTION

POWER LOCKS

The power lock system allows all of the doors and the tailgate to be locked or unlocked electrically by operating a switch on either front door trim panel. The power lock system receives non-switched battery current through a fuse in the Junction Block (JB), so that the power locks remain operational, regardless of the ignition switch position.

The Body Control Module (BCM) locks the doors and tailgate automatically when the vehicle is driven beyond the speed of 25.7 Km/h (15 mph), all doors are closed and the accelerator pedal is depressed.

POWER LOCKS (Continued)

The rolling door lock feature can be disabled if desired.

This vehicle also offers several customer programmable features, which allows the selection of several optional electronic features to suit individual preferences.

The power lock system for this vehicle can also be operated remotely using the available Remote Keyless Entry (RKE) system radio frequency transmitters, if equipped.

Certain functions and features of the power lock system rely upon resources shared with other electronic modules in the vehicle over the Programmable Communications Interface (PCI) data bus network. For proper diagnosis of these electronic modules or of the PCI data bus network, the use of a DRB III® scan tool and the appropriate diagnostic information are required.

REMOTE KEYLESS ENTRY

The RKE system allows the use of a remote battery-powered radio transmitter to signal the Body Control Module (BCM) to actuate the power lock system. The RKE receiver operates on non-switched battery current through a fuse in the Junction Block (JB), so that the system remains operational, regardless of the ignition switch position.

Certain RKE transmitters are also equipped with a Panic button. If the Panic button on the RKE transmitter is depressed, the horn will sound and the exterior lights will flash on the vehicle for about three minutes, or until the Panic button is depressed a second time. A vehicle speed of about 25.7 kilometers-per-hour (15 miles-per-hour) will also cancel the panic event.

The RKE system can also perform other functions on this vehicle. If the vehicle is equipped with the optional Vehicle Theft Security System (VTSS), the RKE transmitter will arm the VTSS when the Lock button is depressed, and disarm the VTSS when the Unlock button is depressed.

The RKE system includes two transmitters when the vehicle is shipped from the factory, but the system can retain the vehicle access codes of up to four transmitters. The transmitter codes are retained in the RKE receiver memory, even if the battery is disconnected. If an RKE transmitter is faulty or lost, new transmitter vehicle access codes can be programmed into the system using a DRB III® scan tool.

This vehicle also offers several customer programmable features, which allows the selection of several optional electronic features to suit individual preferences. Customer programmable feature options affecting the RKE system include:

- **Remote Unlock Sequence** - Allows the option of having only the driver side front door unlock when the RKE transmitter Unlock button is depressed the first time. The remaining doors and the tailgate unlock when the button is depressed a second time within 5 seconds of the first unlock press. Another option is having all doors and the tailgate unlock upon the first depression of the RKE transmitter Unlock button.
- **Sound Horn on Lock** - Allows the option of having the horn sound a short chirp as an audible verification that the RKE system received a valid Lock request from the RKE transmitter, or having no audible verification. This feature is not available on export vehicles.
- **Flash Lights with Lock and Unlock** - Allows the option of having the lights flash as an optical verification that the RKE system received a valid Lock request or Unlock request from the RKE transmitter, or having no optical verification.
- **Flip-up Glass Release** - Allows the operation of a one half second press or a one second press of the rear release button to open flip-up glass.
- **Programming Additional Transmitters** - Allows up to four transmitter vehicle access codes to be stored in the receiver memory. This feature is not available on export vehicles.

Certain functions and features of the RKE system rely upon resources shared with other electronic modules in the vehicle over the Programmable Communications Interface (PCI) data bus network. For diagnosis of these electronic modules or of the PCI data bus network, the use of a DRBIII® scan tool and the appropriate diagnostic information are required.

TAILGATE / FLIP-UP GLASS POWER RELEASE SYSTEM

The entire system is controlled by the Body Control Module (BCM). The tailgate / flip-up glass power release system allows the flip-up glass latch to be released electrically by actuating a switch located integral to the outside tailgate handle. By pulling the handle to the first detent or turning the key cylinder to unlock, the flip-up glass will open. Pulling the handle to the second detent will allow the tailgate to open.

The tailgate / flip-up glass release system operates on non-switched battery current supplied through a fuse in the junction block so that the system remains functional, regardless of the ignition switch position. However, the BCM prevents the flip-up glass latch from being actuated when the tailgate latch is locked.

The tailgate will lock and can not be unlocked if the rear wiper switch is activated. The tailgate will also lock if battery power is lost and then restored.

The tailgate/flip-up glass will not function with the battery discharged or disconnected.

POWER LOCKS (Continued)

COMBINATION FLASHER

This flasher can be energized by the BCM to flash all of the park/turn signal lamps as a optical alert for the RKE panic function and, if the Flash Lights with Lock/Unlock programmable feature is enabled, as an optical verification for the RKE lock/unlock event.

HORN RELAY

This relay can be energized by the BCM to sound the horns as an audible alert for the RKE panic function and, if the Sound Horn on Lock programmable feature is enabled, as an audible verification for the RKE lock event.

LOW BEAM HEADLAMP RELAY

This relay can be energized by the BCM to flash the headlamp low beams as an optical alert for the RKE panic function.

OPERATION

POWER LOCKS

The Body Control Module (BCM) locks or unlocks the doors when an actuation input signal from a door lock switch or Remote Keyless Entry Module (RKE) is received. The BCM turns on the output drivers and provides a voltage level to the door lock motor for a specified time. All passenger doors can be locked or unlocked using a mechanical button mounted on the door trim panel. The front passenger doors and tailgate can be locked or unlocked by using the key cylinder (tailgate cylinder does not lock/unlock vehicle. It only unlocks the tailgate). The tailgate will lock and can not be unlocked if the rear wiper switch is activated (this prevents the wiper from operating when the tailgate is ajar). The tailgate will also lock if battery power is lost and then restored.

AUTOMATIC DOOR LOCKS

When the automatic door locks are ENABLED the door locks will lock when the vehicle is moving at about 25.7 Km/h (15 mph), all doors are closed and the accelerator pedal is depressed. This feature can be switched ON or OFF as desired. When the system is DISABLED the door locks will operate normally, but will not lock automatically when the vehicle is rolling. Once the automatic door locks have been actuated, they will not try to lock the doors again until a door is opened.

DOOR LOCK INHIBIT

If the key is in the ignition, in any position, and either front door is ajar, the doors can not be locked, but the unlock function still operates. Pressing the RKE lock/unlock button under these conditions will result in a normal lock/unlock activation.

After the key is removed from the Ignition Switch, or the doors are closed, the power door locks will operate normally.

DOOR LOCK CIRCUIT PROTECTION

The BCM controls the door lock relays. If the door lock switch is actuated continuously for more than five seconds the BCM will turn the output driver OFF (the BCM would consider the switch stuck). Each lock motor is protected with a Positive Temperature Coefficient device that prevents motor burn out.

REMOTE KEYLESS ENTRY

- **LOCK**: Pressing the LOCK button locks all doors, sounds horn (chirp) if enabled, and arms the Vehicle Theft Security System, if enabled. The chirp verifies that the RKE receiver has sent a message to the BCM for door lock operation. If a door has not been closed before pressing the LOCK button, the vehicle may not be secured and the VTSS (if equipped) will not arm until the door is closed.
- **UNLOCK**: Pressing the UNLOCK button once will unlock the driver's door and activate the illuminated entry system and disarm Vehicle Theft Security System, if equipped. Pressing the UNLOCK button twice within five seconds will unlock all doors.
- **TAILGATE**: Pressing the TAILGATE BUTTON unlocks the tailgate remotely and opens the flip-up glass.
- **PANIC**: If equipped, pressing the PANIC button sounds the horns at half second intervals, flashes the exterior lamps, and turns ON the interior lamps. The panic alarm will remain on for three minutes, or until the PANIC button is actuated again or the ignition switch is turned to the RUN position.

The Remote Keyless Entry Module is capable of retaining the transmitter Vehicle Access Code(s) in its memory even after vehicle power has been interrupted.

DIAGNOSIS AND TESTING - POWER LOCKS

The Body Control Module (BCM) enters a reduced power mode after the key is turned OFF. All diagnosis and testing of the power lock system must be done with the key in the ON position unless otherwise stated.

The most reliable, efficient, and accurate means to diagnose the power lock system requires the use of a DRBIII® scan tool and the proper Diagnostic Procedures manual. The DRBIII® scan tool can provide confirmation that the PCI data bus is functional, that all of the electronic modules are sending and receiv-

POWER LOCKS (Continued)

ing the proper messages on the PCI data bus, and that the power lock motors are being sent the proper hard wired outputs by the relays for them to perform their power lock system functions.

Following are tests that will help to diagnose the hard wired components and circuits of the power lock system. However, these tests may not prove conclusive in the diagnosis of this system. In order to obtain conclusive testing of the power lock system, the Programmable Communications Interface (PCI) data bus network and all of the electronic modules that provide inputs to, or receive outputs from the power lock system components must be checked.

The Body Control Module (BCM) will set Diagnostic Trouble Codes (DTC) for the power lock system.

Refer to the appropriate wiring information. The wiring information includes wiring diagrams, proper wire and connector repair procedures, details of wire harness routing and retention, connector pin-out information and location views for the various wire harness connectors, splices and grounds.

PRELIMINARY DIAGNOSIS

As a preliminary diagnosis for the power lock system, note the system operation while you actuate both the Lock and Unlock functions with the power lock switches and with the Remote Keyless Entry (RKE) transmitter. Then, proceed as follows:

- If the entire power lock system fails to function with either the power lock switches or the RKE transmitter, check the fused B(+) fuse in the junction Block (JB).
- If the power lock system functions with both power lock switches, but not with the RKE transmitter, proceed to diagnosis of the Remote Keyless Entry (RKE) system. (Refer to 8 - ELECTRICAL/POWER LOCKS/KEYLESS ENTRY TRANSMITTER - DIAGNOSIS AND TESTING) or (Refer to 8 - ELECTRICAL/POWER LOCKS/REMOTE KEYLESS ENTRY MODULE - DIAGNOSIS AND TESTING).
- If the power lock system functions with the RKE transmitter, but not with one or both power lock switches, proceed to diagnosis of the door lock switches. (Refer to 8 - ELECTRICAL/POWER LOCKS/POWER LOCK SWITCH - DIAGNOSIS AND TESTING).
- If the driver side power lock switch operates only the driver side front door power lock motor, but all other power lock motors operate with the passenger side power lock switch or the RKE transmitter, use a DRBIII® scan tool and the appropriate diagnostic information to diagnose the Programmable Communications Interface (PCI) data bus.
- If only one power lock motor fails to operate with both power lock switches and the RKE transmitter, proceed to diagnosis of the power lock motor. (Refer to 8 - ELECTRICAL/POWER LOCKS/POWER LOCK MOTOR - DIAGNOSIS AND TESTING).

DOOR LOCK / UNLOCK SWITCH

DIAGNOSIS AND TESTING - DOOR LOCK/ UNLOCK SWITCH

(1) Remove the switch to be tested (Refer to 8 - ELECTRICAL/POWER LOCKS/POWER LOCK SWITCH - REMOVAL).

(2) Using an ohmmeter, Test switch for resistance values (Fig. 1).

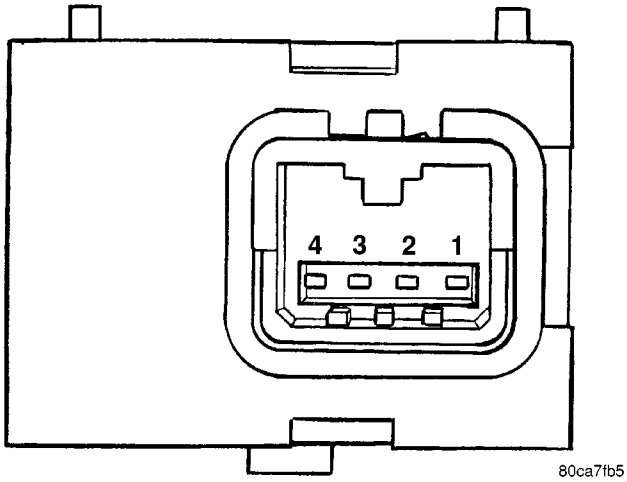

Fig. 1 DOOR LOCK/UNLOCK SWITCH

DOOR LOCK SWITCH TEST

SWITCH POSITION	PINS	RESISTANCE VALUE
UNACTUATED	1 AND 4	5.0K OHM ± 10 %
LOCK	1 AND 4	1.4K OHM ±10 %
UNLOCK	1 AND 4	426 OHM ± 10 %

(3) If test results are not obtained as shown in the test table, replace the switch.

REMOVAL

(1) Disconnect and isolate the battery negative cable.

(2) Remove the door trim panel (Fig. 2) (Refer to 23 - BODY/DOOR - FRONT/TRIM PANEL - REMOVAL).

(3) Disconnect electrical harness connector from switch.

DOOR LOCK / UNLOCK SWITCH (Continued)

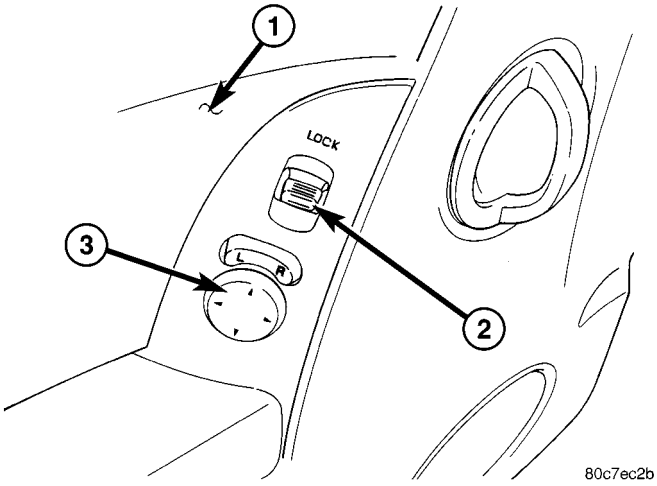

Fig. 2 DOOR LOCK SWITCH

1 - DOOR TRIM PANEL
2 - DOOR LOCK SWITCH
3 - POWER MIRROR SWITCH

(4) From behind the door trim panel, gently pry the switch from the door trim panel (Fig. 3).

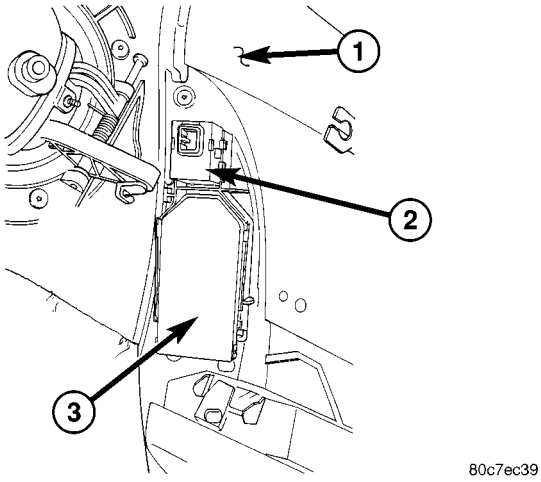

Fig. 3 DOOR LOCK/MIRROR SWITCH

1 - DOOR TRIM PANEL
2 - DOOR LOCK SWITCH
3 - POWER MIRROR SWITCH

INSTALLATION

(1) Press the switch into place.

(2) Connect the electrical harness connector to the switch.

(3) Install the door trim panel (Refer to 23 - BODY/DOOR - FRONT/TRIM PANEL - INSTALLATION).

(4) Connect the battery negative cable.

DOOR LOCK MOTOR

DESCRIPTION

The lock mechanisms are actuated by a reversible electric motor mounted within each door and tailgate. The power lock motors are integral to the door latch units.

The power lock motors cannot be adjusted or repaired and, if faulty or damaged, the door latch unit must be replaced.

OPERATION

The door lock motors are controlled by relays. A positive and negative battery connection to the two motor terminals will cause the motor to move in one direction. Reversing the current will cause the motor to move in the opposite direction.

DIAGNOSIS AND TESTING - DOOR LOCK MOTOR

The most reliable, efficient, and accurate means to diagnose the power lock system requires the use of a DRBIII® scan tool and the proper Diagnostic Procedures manual. Refer to the appropriate wiring information.

FLIP-UP GLASS RELEASE SWITCH

DIAGNOSIS AND TESTING - FLIP-UP GLASS RELEASE SWITCH

(1) Disconnect and isolate the battery negative cable.

(2) Remove the tailgate trim panel (Refer to 23 - BODY/DECKLID/HATCH/LIFTGATE/TAILGATE/ TRIM PANEL - REMOVAL).

(3) Disconnect the wire harness connector.

(4) Using an ohmmeter, check for continuity between the pins of the wire harness connector while pulling on the tailgate handle.

(5) If no continuity is found, replace the tailgate handle assembly (Refer to 23 - BODY/DECKLID/ HATCH/LIFTGATE/TAILGATE/EXTERIOR HANDLE - REMOVAL).

DOOR LOCK RELAY

REMOVAL

(1) Disconnect and isolate the battery negative cable.

(2) Reach up under instrument panel and remove the relay from Junction Block (JB).

INSTALLATION

(1) Position the horn relay in the proper receptacle in the Junction Block (JB).

(2) Push down firmly on the relay until the terminals are fully seated.

(3) Connect the battery negative cable.

REMOTE KEYLESS ENTRY MODULE

DESCRIPTION

When an RKE lock message is sent to the Body Control Module (BCM), the BCM actuates the doors and the tailgate lock, the interior lighting is turned off, the horn chirps (if this feature is enabled), the exterior lamps flash (if this feature is enabled) and, if the vehicle is so equipped, the Vehicle Theft Security System (VTSS) is armed. When an RKE unlock message is sent to the BCM, the BCM actuates the driver side front door (or all doors and the tailgate if this feature is enabled) unlock, the interior lighting is turned on and, if the vehicle is so equipped, the VTSS is disarmed. The exterior lamps flash if this feature is enabled

When an RKE panic message is sent to the BCM, the BCM actuates the driver side front door (or all doors and the tailgate if this feature is enabled) unlock, the interior lighting is turned on and, if the vehicle is so equipped, the VTSS is disarmed. The panic message will also cause the exterior lamps (including the headlights) to flash, and the horn to pulse for about three minutes, or until a second panic message is sent to the BCM. A vehicle speed of about 25.7 kilometers-per-hour (15 miles-per-hour) will also cancel the panic event.

OPERATION

Whenever the vehicle battery power is interrupted, the Remote Keyless Module (RKE) Module will retain all vehicle access codes in its memory. When replacing or adding a key fob transmitter (maximum of 4) a DRB III® scan tool is required to program the RKE Module to accept the new Vehicle Access Code if a customer owned transmitter is not available.

If a functioning transmitter is available, (Refer to 8 - ELECTRICAL/POWER LOCKS/KEYLESS ENTRY TRANSMITTER - STANDARD PROCEDURE)

DIAGNOSIS AND TESTING - REMOTE KEYLESS ENTRY MODULE

Refer to the proper Body Diagnostic Procedures Manual for testing the Remote Keyless Entry system using a DRB III® scan tool.

REMOVAL

(1) Disconnect and isolate the battery negative cable.

(2) Remove the Junction Block (JB) (Refer to 8 - ELECTRICAL/POWER DISTRIBUTION/JUNCTION BLOCK - REMOVAL).

(3) Remove Remote Keyless Entry module from Body Control Module (Fig. 4).

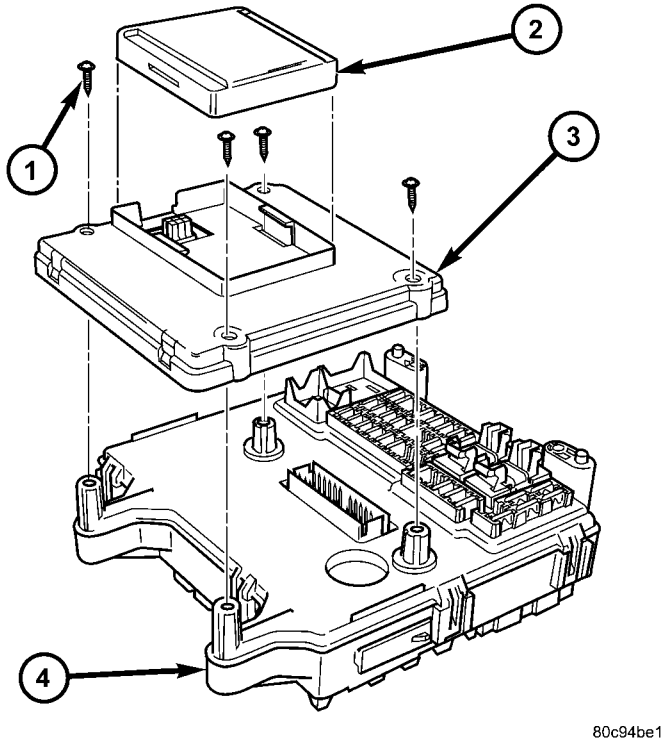

Fig. 4 RKE Module Remove/Install

1 - SCREW (4)
2 - RKE MODULE
3 - BODY CONTROL MODULE
4 - JUNCTION BLOCK

INSTALLATION

(1) Install Remote Keyless Entry module to Body Control Module.

(2) Install Junction Block (JB) (Refer to 8 - ELECTRICAL/POWER DISTRIBUTION/JUNCTION BLOCK - INSTALLATION).

(3) Connect the battery negative cable.

REMOTE KEYLESS ENTRY TRANSMITTER

DIAGNOSIS AND TESTING - REMOTE KEYLESS ENTRY TRANSMITTER

Using special tool 9001, first test to ensure that the transmitter is functioning. Typical testing distance is 2.5 centimeters (1 inch) for Asian transmitters and 30.5 centimeters (12 inches) for all others. To test, position the transmitter as shown (Fig. 5). Press any transmitter button, then test each button individually. The tool will beep if a radio signal strength that lights five or more LED's is detected. Repeat this test three times. If transmitter fails any of the test refer to the Diagnostic Procedures manual.

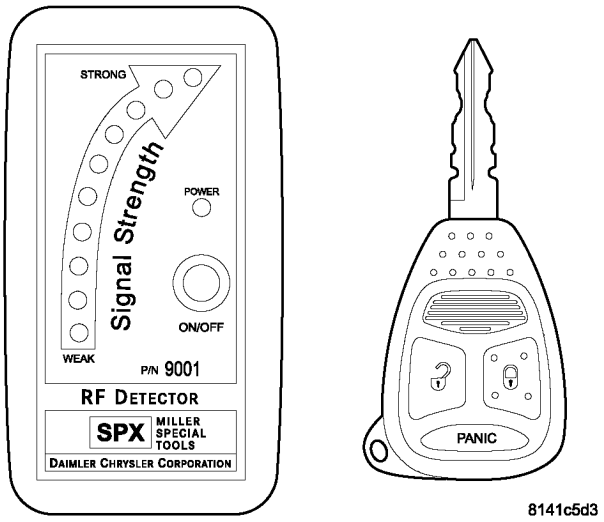

Fig. 5 RKE DIAGNOSIS

STANDARD PROCEDURE

STANDARD PROCEDURE - RKE TRANSMITTER CUSTOMER PREFERENCES

AUTOMATIC (ROLLING) LOCKS

The rolling locks feature can be toggled ON/OFF by using the DRB III® only.

HORN CHIRP DISABLING / ENABLING

The horn chirp can be toggled using a DRB III® or by using the Remote Keyless Entry (RKE) transmitter.

To DISABLE (cancel) the horn chirp feature, press and hold the transmitter LOCK button for four to ten seconds. While pressing the LOCK button in, press the UNLOCK button. Release both buttons.

To ENABLE the horn chirp feature, repeat the above procedure.

OPTICAL CHIRP (FLASH) DISABLING / ENABLING

The optical chirp can be toggled using a DRB III® or by using the Remote Keyless Entry (RKE) transmitter.

To DISABLE (cancel) the optical chirp feature, press and hold the transmitter LOCK button for four to ten seconds. While pressing the LOCK button in, press the TAILGATE RELEASE button. Release both buttons.

To ENABLE the optical chirp feature, repeat the above procedure.

TAIL GATE RELEASE DELAY

Press the UNLOCK button for four to ten seconds. While pressing the UNLOCK button, press the TAIL GATE RELEASE button. Release both buttons.

This will toggle between PRESS AND HOLD and PRESS (no delay).

UNLOCK SEQUENCE

The unlock sequence can be toggled using a DRB III® or by using the Remote Keyless Entry (RKE) transmitter.

Press and hold the transmitter UNLOCK button for four to ten seconds. While pressing the UNLOCK button in, press the LOCK button. Release both buttons.

This will toggle between Driver door first and Unlock all doors function.

STANDARD PROCEDURE - RKE TRANSMITTER PROGRAMING

New Remote Keyless Entry (RKE) transmitters can be programed using the DRBIII® scan tool and the proper Diagnostic Procedures manual, if no functioning transmitter is available. The DRBIII® scan tool can provide confirmation that the PCI data bus is functional, and that all of the electronic modules are sending and receiving the proper messages on the PCI data bus.

The following procedure can be used as long as one functioning transmitter is available:

(1) Turn ignition to the RUN position (allow ignition chimes to stop).

(2) Using any original (working) transmitter, press the UNLOCK button for 4 to 10 seconds.

(3) Within the specified 4 to 10 seconds, continue pressing the UNLOCK button and press the PANIC button for 1 second, and release both buttons (a chime will sound to indicate that the transmitter programming mode has been entered - allow 3 seconds for chime to sound).

REMOTE KEYLESS ENTRY TRANSMITTER (Continued)

(4) Press LOCK and UNLOCK buttons simultaneously for 1 second and release.

(5) Press and release any button on the same transmitter and a chime will sound after successfully programming the transmitter.

(6) Repeat steps 4 to 6 to program additional transmitters.

(7) Turn ignition to the OFF position. Transmitter programming mode will discontinue after 60 seconds. All transmitter programming must be completed within time specified.

STANDARD PROCEDURE - RKE TRANSMITTER BATTERIES

The Remote Keyless Entry (RKE) transmitter case snaps open and shut for battery access. To replace the RKE transmitter batteries:

(1) Using a thin coin, gently pry at the notch in the center seam of the RKE transmitter case halves near the key ring until the two halves unsnap.

(2) Lift the back half of the transmitter case off of the RKE transmitter.

(3) Remove the two batteries from the RKE transmitter.

(4) Replace the two batteries with new Panasonic 2016 (if equipped with one battery, use 2032), or equivalent. Be certain that the batteries are installed with their polarity correctly oriented.

(5) Align the two RKE transmitter case halves with each other, and squeeze them firmly and evenly together until they snap back into place.

SPECIFICATIONS - REMOTE KEYLESS ENTRY TRANSMITTER

RANGE

Normal operation range is up to a distance of 3 to 7 meters (10 to 23 ft.) of the vehicle. Range may be better or worse depending on the environment around the vehicle.

TAILGATE CYLINDER LOCK SWITCH

DESCRIPTION

The tailgate cylinder lock switch is integral to the key lock cylinder inside the tailgate. The tailgate cylinder lock switch is a normally-open momentary switch that is hard wired directly to the Body Control Module (BCM), and closes a path to ground through an internal resistor when the lock cylinder is rotated to the unlock or lock position.

The tailgate cylinder lock switch cannot be adjusted or repaired.

OPERATION

The tailgate cylinder lock switch is actuated when the key is inserted in the lock cylinder and turned to the unlock or lock position. The tailgate cylinder lock switch closes a path to ground through an internal resistor for the Body Control Module (BCM) when the tailgate key lock cylinder is in the lock or unlock position, and opens the ground path when the lock cylinder is in the neutral position. The BCM reads the switch status, then sends the proper switch status messages to other electronic modules over the Programmable Communications Interface (PCI) data bus network. The tailgate cylinder lock switch unlock status message is used by the BCM as an input for Vehicle Theft Security System (VTSS) operation and to tell the BCM to lock or unlock the tailgate. There is no mechanical linkage between the tailgate key cylinder and the latches.

DIAGNOSIS AND TESTING - TAILGATE CYLINDER LOCK SWITCH

(1) Disconnect and isolate the battery negative cable.

(2) Remove tailgate trim panel (Refer to 23 - BODY/DECKLID/HATCH/LIFTGATE/TAILGATE/ TRIM PANEL - REMOVAL).

(3) Disconnect tailgate cylinder lock switch harness connector.

(4) Using a ohmmeter, test for resistances as shown in the Tailgate Cylinder Lock Switch Table.

TAILGATE CYLINDER LOCK SWITCH TABLE

SWITCH POSITION	RESISTANCE
NEUTRAL	0 OHMS
LOCK (CLOCKWISE)	2 K OHMS ± 10 %
UNLOCK (COUNTER-CLOCKWISE)	470 OHMS ± 10 %

(5) If switch resistance is not correct, replace switch.

REMOVAL

(1) Disconnect and isolate the battery negative cable.

(2) Remove the tailgate trim panel. (Refer to 23 - BODY/DECKLID/HATCH/LIFTGATE/TAILGATE/ TRIM PANEL - REMOVAL).

(3) Remove the retainer clip from the pin on the back of the door lock cylinder (Fig. 6).

(4) Remove the washer from the pin on the back of the door lock cylinder.

(5) Remove the door cylinder lock switch from the back of the lock cylinder.

TAILGATE CYLINDER LOCK SWITCH (Continued)

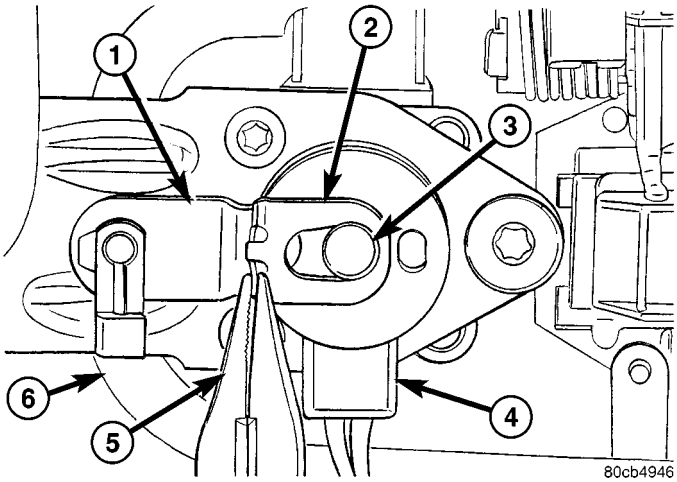

Fig. 6 Lock Cylinder Switch Remove/Install -Typical

1 - LEVER
2 - RETAINER
3 - LOCK CYLINDER
4 - SWITCH
5 - PLIERS
6 - OUTSIDE DOOR HANDLE

INSTALLATION

(1) Position the tailgate cylinder lock switch onto the back of the lock cylinder with the wire harness oriented toward the bottom.

(2) Position the washer over the switch.

(3) Install the retainer clip onto the pin on the back of the tailgate lock cylinder. Be certain that the center tab of the retainer is engaged in the retention hole on the lock lever.

(4) Install the trim panel (Refer to 23 - BODY/DECKLID/HATCH/LIFTGATE/TAILGATE/TRIM PANEL - INSTALLATION).

(5) Connect the battery negative cable.

POWER MIRRORS

TABLE OF CONTENTS

page

POWER MIRRORS
DESCRIPTION 10
OPERATION 10
DIAGNOSIS AND TESTING - POWER MIRRORS 10
AUTOMATIC DAY / NIGHT MIRROR
DESCRIPTION - REAR VIEW MIRROR 11
OPERATION - REAR VIEW MIRROR 11
DIAGNOSIS AND TESTING - AUTOMATIC DAY / NIGHT MIRROR 11
POWER FOLDAWAY MIRROR SWITCH - EXPORT
DESCRIPTION 12
OPERATION 12
DIAGNOSIS AND TESTING - POWER FOLDAWAY MIRROR SWITCH - EXPORT . . . 13
REMOVAL 13
POWER MIRROR SWITCH
DIAGNOSIS AND TESTING - POWER MIRROR SWITCH 13
REMOVAL 14
INSTALLATION 14
SIDEVIEW MIRROR
REMOVAL 14

POWER MIRRORS

DESCRIPTION

The power operated sideview mirrors allow the driver to adjust both outside mirrors electrically from the drivers seat by operating a switch on the driver side front door trim panel (Fig. 1).

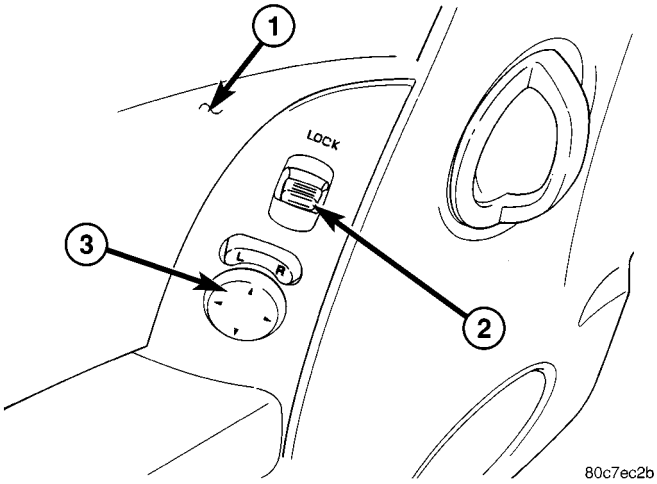

Fig. 1 POWER MIRROR SWITCH

1 - DOOR TRIM PANEL
2 - DOOR LOCK SWITCH
3 - POWER MIRROR SWITCH

OPERATION

The power mirrors receive ignition current through a fuse in the junction block, and will only operate when the ignition switch is in the Run position.

DIAGNOSIS AND TESTING - POWER MIRRORS

WIRING VOLTAGE TEST

The following wiring test determines whether or not voltage is continuous through the body harness to switch.

(1) Remove the power mirror switch (Refer to 8 - ELECTRICAL/POWER MIRRORS/POWER MIRROR SWITCH - REMOVAL).

(2) Disconnect wire connector from back of power mirror switch.

(3) Switch ignition to the RUN position.

(4) Connect the clip end of a 12 volt test light to Pin 5 in the harness connector at the mirror switch. Touch the test light probe to Pin 3.

If the test light illuminates, the wiring circuit between the battery and switch is OK.

If the lamp does not illuminate, first check fuse 25 in the Junction Block (JB). If fuse 25 is OK, then check for a broken wire.

Refer to the appropriate wiring information.

POWER MIRROR MOTOR TEST

If the power mirror switch is receiving proper current and ground and mirrors do not operate, proceed with power mirror motor test. Refer to the appropriate wiring information.

(1) Remove front door trim panel to gain access to power mirror wire connector (Refer to 23 - BODY/DOOR - FRONT/TRIM PANEL - REMOVAL).

(2) Disconnect wire harness connector to power mirror switch (Fig. 2).

(3) Using two jumper wires:

- Connect one to a 12 volt source

POWER MIRRORS (Continued)

- Connect the other to a good body ground
- Refer to the Mirror Motor Test Chart for proper wire connections at the switch connector

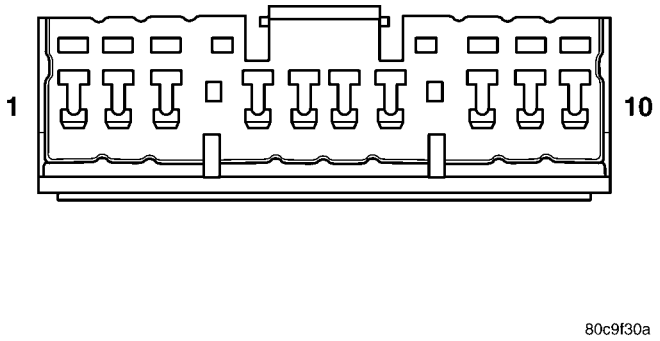

Fig. 2 POWER MIRROR SWITCH CONNECTOR

MIRROR MOTOR TEST CHART

12 VOLTS	GROUND	MIRROR REACTION	
SWITCH CONNECTOR		RIGHT	LEFT
PIN 2	PIN 6	-	UP
PIN 6	PIN 1	-	LEFT
PIN 6	PIN 2	-	DOWN
PIN 1	PIN 6	-	RIGHT
PIN 9	PIN 6	UP	-
PIN 6	PIN 10	LEFT	-
PIN 6	PIN 9	DOWN	-
PIN 10	PIN 6	RIGHT	-

(4) If results shown in table are not obtained, check for open or shorted circuit. Replace mirror assembly as necessary.

AUTOMATIC DAY / NIGHT MIRROR

DESCRIPTION - REAR VIEW MIRROR

The automatic dimming inside day/night rear view mirror system is a completely self-contained unit that replaces the standard equipment inside rear view mirror. This system will automatically change the reflectance of the inside rear view mirror to protect the driver from the unwanted headlight glare of trailing vehicles while driving at night. The automatic day/night inside mirror receives ignition switched battery current through a fuse in the junction block, and will only operate when the ignition switch is in the On position.

The automatic day/night mirror sensitivity cannot be repaired or adjusted. If any component of this unit is inoperative or damaged, the entire automatic day/night inside rear view mirror unit must be replaced.

OPERATION - REAR VIEW MIRROR

The automatic day/night mirror switch allows the driver a manual control of whether the automatic dimming feature is operational. This switch is a momentary rocker-type switch located on the lower rear-facing surface of the mirror housing. When Auto is selected, a Light-Emitting Diode (LED) on the mirror housing just to the right of the switch illuminates to indicate that automatic day/night mirror is turned on. When Off is selected, the LED is turned off. The mirror also senses the backup lamp circuit, and will automatically disable its self-dimming feature whenever the transmission gear selector is in the Reverse position.

A thin layer of electrochromatic material between two pieces of conductive glass make up the face of the mirror. Two photocell sensors are used to monitor light levels and adjust the reflectance of the mirror. The ambient photocell sensor faces forward, to detect the outside light levels. The headlamp sensor is located on the mirror housing just to the left of the switch and facing rearward, to detect the light level received at the rear window side of the mirror. When the difference between the two light levels becomes too great (the light level received at the rear of the mirror is much higher than that at the front of the mirror), the mirror begins to darken.

DIAGNOSIS AND TESTING - AUTOMATIC DAY / NIGHT MIRROR

For complete circuit diagrams, refer to the appropriate wiring information.

(1) Check the fused ignition switch output (run/start) fuse in the junction block. If OK, go to Step 2. If not OK, repair the shorted circuit or component as required and replace the faulty fuse.

(2) Turn the ignition switch to the On position. Check for battery voltage at the fused ignition switch output (run/start) fuse in the junction block. If OK, go to Step 3. If not OK, repair the open fused ignition switch output (run/start) circuit to the ignition switch as required.

(3) Disconnect the overhead wire harness connector from the automatic day/night mirror connector receptacle. Check for battery voltage at the fused ignition switch output (run/start) circuit cavity of the overhead wire harness connector for the automatic day/night mirror. If OK, go to Step 4. If not OK, repair the open fused ignition switch output (run/start) circuit to the fuse in the junction block as required.

AUTOMATIC DAY / NIGHT MIRROR (Continued)

(4) Turn the ignition switch to the Off position. Check for continuity between the ground circuit cavity of the overhead wire harness connector for the automatic day/night mirror and a good ground. There should be continuity. If OK, go to Step 5. If not OK, repair the open ground circuit to ground as required.

(5) Turn the ignition switch to the On position. Set the parking brake. Place the transmission gear selector lever in the Reverse position. Check for battery voltage at the backup lamp switch output circuit cavity of the overhead wire harness connector for the automatic day/night mirror. If OK, reconnect the overhead wire harness connector to the automatic day/night mirror connector receptacle and go to Step 6. If not OK, repair the open backup lamp switch output circuit as required.

(6) Place the transmission gear selector lever in the Neutral position. Place the automatic day/night mirror switch in the Auto (LED next to the switch is lighted) position (Fig. 3). Cover the forward facing ambient photocell sensor to keep out any ambient light.

NOTE: The ambient photocell sensor must be covered completely, so that no light reaches the sensor. Use a finger pressed tightly against the sensor, or cover the sensor completely with electrical tape.

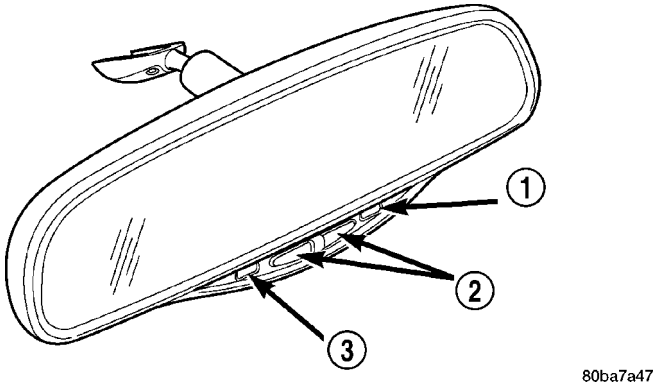

Fig. 3 Automatic Day/Night Mirror

1 - LED INDICATOR
2 - SWITCH
3 - HEADLAMP SENSOR

(7) Shine a light into the rearward facing headlamp photocell sensor. The automatic day/night mirror should darken. If OK, go to Step 8. If not OK, replace the faulty automatic day/night mirror unit.

(8) With the mirror darkened, place the transmission gear selector lever in the Reverse position. The automatic day/night mirror should return to its normal reflectance. If not OK, replace the faulty automatic day/night mirror unit.

POWER FOLDAWAY MIRROR SWITCH - EXPORT

DESCRIPTION

These vehicles may be equipped with Power Foldaway Mirrors. This feature allows both the driver and passenger side view mirrors to fold inward (retract) on demand. The vehicle has an additional switch located below the power mirror switch that controls the folding function of the mirror assembly (Fig. 4).

The fold-away side view mirror is attached to the vehicle's door in the same manner as mirrors without the fold-away option. The fold-away mirrors unique option is the internal motor which allows the mirrors to fold inward. The fold-away mirror motor is not serviceable separately and if a motor is found to be faulty, the entire side view mirror must be replaced.

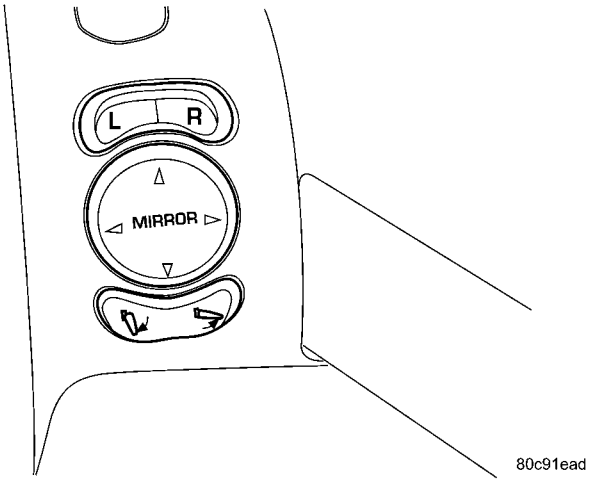

Fig. 4 POWER FOLDAWAY MIRROR SWITCH

OPERATION

When the mirror retract switch is depressed, both of the side view mirrors will fold inward, Thus making the overall width of the vehicle the smallest possible. This can be helpful were parking space is a absolute minimum.

The power fold away mirrors will operate only when the ignition is in the On position.

The power fold away mirror system consists of the following components: mirror switch, side view mirror, relay, wires and fuse. Refer to the appropriate wiring information. The wiring information includes wiring diagrams, proper wire and connector repair procedures, details of wire harness routing and retention, connector pin-out information and location views for the various wire harness connectors, splices and grounds.

POWER FOLDAWAY MIRROR SWITCH - EXPORT (Continued)

DIAGNOSIS AND TESTING - POWER FOLDAWAY MIRROR SWITCH - EXPORT

(1) Disconnect and isolate the battery negative cable.

(2) Remove power foldaway mirror switch (Refer to 8 - ELECTRICAL/POWER MIRRORS/POWER MIRROR SWITCH - REMOVAL).

(3) Disconnect wire harness connector.

(4) Using a ohmmeter, test for continuity between the terminals of the switch (Fig. 5).

(5) If results shown in the table are not obtained, replace the switch.

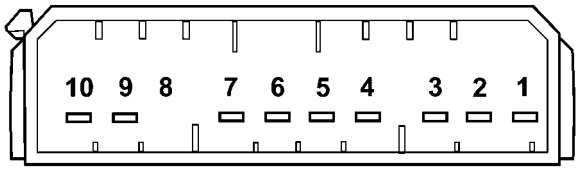

80c9c010

Fig. 5 POWER MIRROR SWITCH

POWER FOLDAWAY MIRROR SWITCH TEST

SWITCH POSITION	CONTINUITY BETWEEN
RETRACT	5 AND 4
	3 AND 7
EXTEND	5 AND 7
	3 AND 4
MIRROR SELECT SWITCH IN ″LEFT″ POSITION	
UP	5 AND 2
	3 AND 6
DOWN	5 AND 6
	3 AND 2
LEFT	5 AND 6
	3 AND 1
RIGHT	5 AND 1
	3 AND 6
MIRROR SELECT SWITCH IN ″RIGHT″ POSITION	
UP	5 AND 9
	3 AND 6
DOWN	5 AND 6
	3 AND 9
LEFT	5 AND 6
	3 AND 10
RIGHT	5 AND 10
	3 AND 6

REMOVAL

For removal procedures (Refer to 8 - ELECTRICAL/POWER MIRRORS/POWER MIRROR SWITCH - REMOVAL).

POWER MIRROR SWITCH

DIAGNOSIS AND TESTING - POWER MIRROR SWITCH

(1) Remove power mirror switch (Refer to 8 - ELECTRICAL/POWER MIRRORS/POWER MIRROR SWITCH - REMOVAL).

(2) Disconnect wiring harness connector from switch.

(3) Using a ohmmeter, test for continuity between the terminals of the switch (Fig. 6).

(4) If results shown in the table are not obtained, replace the switch.

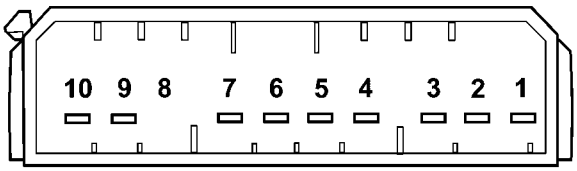

80c9c010

Fig. 6 POWER MIRROR SWITCH

POWER MIRROR SWITCH TEST

SWITCH POSITION	CONTINUITY BETWEEN
MIRROR SELECT SWITCH IN ″LEFT″ POSITION	
UP	5 AND 2
	3 AND 6
DOWN	5 AND 6
	3 AND 2
LEFT	5 AND 6
	3 AND 1

POWER MIRROR SWITCH (Continued)

SWITCH POSITION	CONTINUITY BETWEEN
RIGHT	5 AND 1
	3 AND 6
MIRROR SELECT SWITCH IN "RIGHT" POSITION	
UP	5 AND 9
	3 AND 6
DOWN	5 AND 6
	3 AND 9
LEFT	5 AND 6
	3 AND 10
RIGHT	5 AND 10
	3 AND 6

REMOVAL

(1) Disconnect and isolate the battery negative cable.

(2) Remove door trim panel (Refer to 23 - BODY/ DOOR - FRONT/TRIM PANEL - REMOVAL).

(3) Disconnect wire harness connector from switch (Fig. 7).

(4) Remove switch from door trim panel.

INSTALLATION

(1) Install switch to door trim panel.

(2) Connect wire harness connector to switch.

(3) Install door trim panel (Refer to 23 - BODY/ DOOR - FRONT/TRIM PANEL - INSTALLATION).

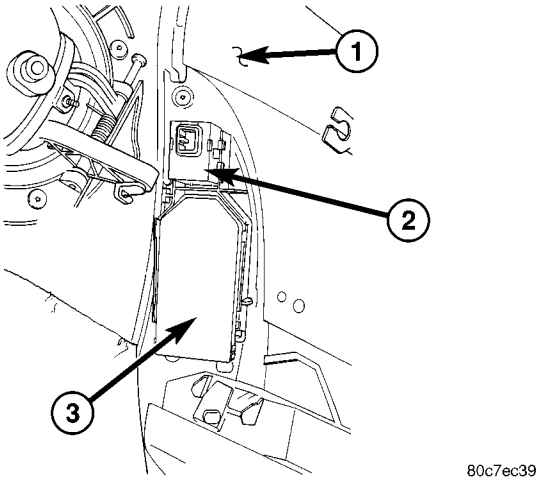

Fig. 7 DOOR LOCK/MIRROR SWITCH

1 - DOOR TRIM PANEL
2 - DOOR LOCK SWITCH
3 - POWER MIRROR SWITCH

(4) Connect battery negative cable.

SIDEVIEW MIRROR

REMOVAL

(1) For removal procedures, (Refer to 23 - BODY/ EXTERIOR/SIDE VIEW MIRROR - REMOVAL).

POWER SEATS

TABLE OF CONTENTS

	page
POWER SEATS	
DESCRIPTION	15
OPERATION	16
DIAGNOSIS AND TESTING - POWER SEATS	16
LEFT POWER SEAT SWITCH	
DESCRIPTION	16
OPERATION	16
DIAGNOSIS AND TESTING - LEFT POWER SEAT SWITCH	17
REMOVAL	18
INSTALLATION	18
RIGHT POWER SEAT SWITCH	
DESCRIPTION	18
OPERATION	18
DIAGNOSIS AND TESTING - RIGHT POWER SEAT SWITCH	19
REMOVAL	20
INSTALLATION	20
POWER SEAT TRACK	
DESCRIPTION	20
OPERATION	20
DIAGNOSIS AND TESTING - POWER SEAT TRACK	21
REMOVAL	21
INSTALLATION	21

POWER SEATS

DESCRIPTION

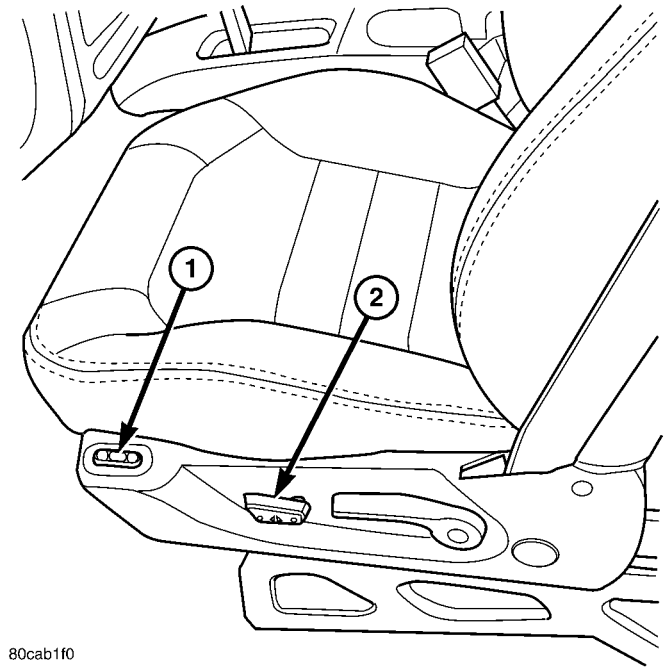

Fig. 1 KJ Heated/Power Seat

1 - HEATED SEAT SWITCH
2 - POWER SEAT SWITCH

Individually controlled, electrically powered front seats are available as factory-installed equipment on this model. Vehicles with this option can be visually identified by the two separate power seat switches, mounted on each of the front seat cushion side shields (Fig. 1). The power seat system option allows the front seating positions to be electrically adjusted for optimum vehicle control and comfort. The power seat cushion can be adjusted forward, rearward, front up, front down, rear up, or rear down. The power seat system for this vehicle includes the following major components, which are described in further detail later in this section:

- **Power Seat Switches** - Two power seat switches are used per vehicle, one for the driver and one for the front seat passenger. Refer to the left and right power seat switch information later in this section.
- **Power Seat Tracks** - Two power seat tracks are used per vehicle, one for the driver and one for the front seat passenger seats. Refer to the power seat track information later in this section.
- **Circuit Breaker** - An automatic resetting circuit breaker (# 1) is located in the Junction Block and is used to protect the power seat system from current overload.

Hard wired circuitry connects the power seat system components to each other through the electrical system of the vehicle. These hard wired circuits are integral to several wire harnesses, which are routed throughout the vehicle and retained by many different methods. These circuits may be connected to each other, to the vehicle electrical system and to the power seat system components through the use of a combination of soldered splices, splice block connectors and many different types of wire harness terminal connectors and insulators. Refer to the **Wiring** section of this manual for more information. The wiring information includes wiring diagrams, proper wire and connector repair procedures, further details

POWER SEATS (Continued)

on wire harness routing and retention, as well as pin-out and location views for the various wire harness connectors, splices and grounds.

OPERATION

The power seat system receives battery current through a fuse in the Power Distribution Center (PDC) and a circuit breaker in the Junction Block, regardless of the ignition switch position.

When a power seat switch control knob or knobs are actuated, a battery feed and a ground path are applied through the switch contacts to the appropriate power seat track adjuster motor. The selected adjuster motor operates to move the seat track through its drive unit in the selected direction until the switch is released, or until the travel limit of the seat track is reached. When the switch is moved in the opposite direction, the battery feed and ground path to the motor are reversed through the switch contacts. This causes the adjuster motor to run in the opposite direction.

Refer to the owner's manual in the vehicle glove box for more information on the features, use and operation of the power seat system.

DIAGNOSIS AND TESTING - POWER SEATS

Before any testing of the power seat system is attempted, the battery should be fully-charged and all wire harness connections and pins cleaned and tightened to ensure proper continuity and grounds. Refer to the appropriate wiring information. The wiring information includes wiring diagrams, proper wire and connector repair procedures, further details on wire harness routing and retention, as well as pin-out and joint connector location views for the various wire harness connectors, splices and grounds.

(1) If all power seats are inoperative, check the automatic resetting circuit breaker in the Junction Block. (Refer to 8 - ELECTRICAL/POWER DISTRIBUTION/CIRCUIT BREAKER - DIAGNOSIS AND TESTING).

(2) With the dome lamp on, apply the power seat switch in the direction of the failure.

(3) If the dome lamp dims, the seat or the power seat track may be jammed. Check under and behind the seat for binding or obstructions.

(4) If the dome lamp does not dim, proceed with testing of the individual power seat system components and circuits.

LEFT POWER SEAT SWITCH

DESCRIPTION

Vehicles equipped with the power seat option utilize a six-way power seat switch. This six-way power seat switch features one seat cushion shaped knob, visible on the outboard seat cushion side shield (Fig. 2).

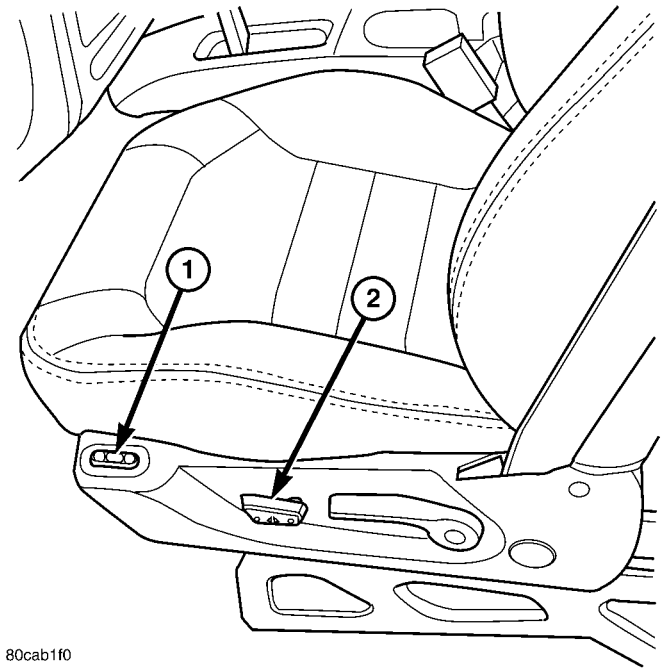

Fig. 2 KJ Heated/Power Seat

1 - HEATED SEAT SWITCH
2 - POWER SEAT SWITCH

The switch is secured to the back of the seat cushion side shield with two screws. However, the control knob must be removed before the seat switch can be removed from the side shield.

The individual switches internal to the power seat switch cannot be repaired. If one switch is damaged or faulty, the entire power seat switch unit must be replaced.

OPERATION

The power seat tracks can be adjusted in six different ways using the power seat switches. See the owner's manual in the vehicle glove box for more information on the power seat switch functions and the seat adjusting procedures.

When a power seat switch control knob or knobs are actuated, a battery feed and a ground path are applied through the switch contacts to the power seat track adjuster motor. The selected adjuster motor operates to move the seat track through its drive unit in the selected direction until the switch is released, or until the travel limit of the seat track is reached. When the switch is moved in the opposite direction, the battery feed and ground path to the motor are reversed through the switch contacts. This causes the adjuster motor to run in the opposite direction.

LEFT POWER SEAT SWITCH (Continued)

No power seat switch should be held applied in any direction after the seat track has reached its travel limit. The power seat adjuster motors each contain a self-resetting circuit breaker to protect them from overload. However, consecutive or frequent resetting of the circuit breaker must not be allowed to continue, or the motor may be damaged.

DIAGNOSIS AND TESTING - LEFT POWER SEAT SWITCH

For complete circuit diagrams, refer to **Power Seat** in Wiring Diagrams.

(1) Disconnect and isolate the battery negative cable.

(2) Remove the power seat switch from the outboard seat cushion side shield.

(3) Use an ohmmeter to test the continuity of the power seat switch in each switch position. See the Power Seat Switch Continuity chart (Fig. 3) and switch (Fig. 4) below. If OK, refer to **Diagnosis and Testing the Power Seat Track** in this section. If not OK, replace the faulty power seat switch unit.

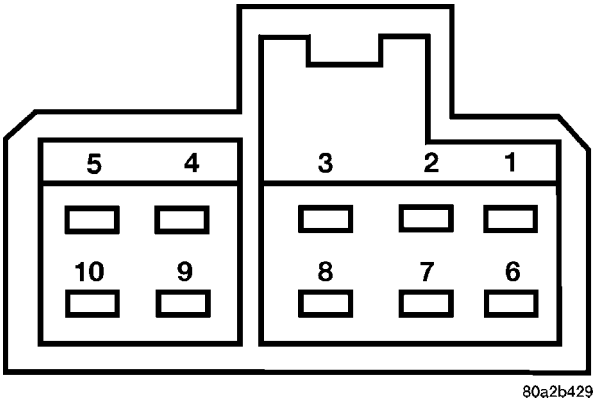

Fig. 3 Power Seat Switch Pin ID.

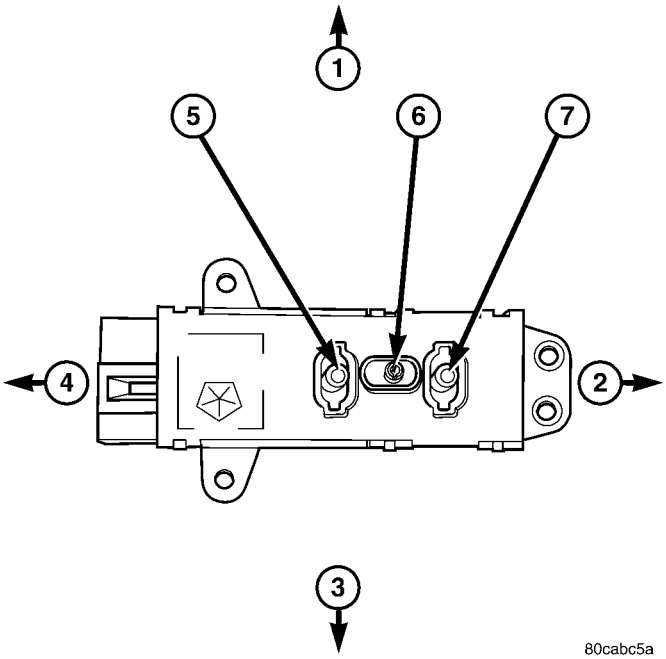

Fig. 4 Diagnosing Power Seat Switch

1 - UP
2 - REARWARD
3 - DOWN
4 - FORWARD
5 - FRONT RISER SWITCH
6 - CENTER SEAT SWITCH
7 - REAR RISER SWITCH

SWITCH POSITION	CONTINUITY BETWEEN PINS	
	DRIVER SEAT	PASSENGER SEAT
OFF	PIN 1 to 3 PIN 1 to 6 PIN 1 to 7 PIN 1 to 8 PIN 1 to 9 PIN 1 to 10	PIN 1 to 3 PIN 1 to 6 PIN 1 to 7 PIN 1 to 8 PIN 1 to 9 PIN 1 to 10
FRONT RISER UP	PIN 1 to 8 PIN 5 to 9	PIN 1 to 8 PIN 5 to 9
FRONT RISER DOWN	PIN 1 to 9 PIN 5 to 8	PIN 1 to 9 PIN 5 to 8
CENTER SWITCH FORWARD	PIN 1 to 6 PIN 5 to 3	PIN 1 to 6 PIN 5 to 3

LEFT POWER SEAT SWITCH (Continued)

CENTER SWITCH REARWARD	PIN 1 to 3 PIN 5 to 6	PIN 1 to 3 PIN 5 to 6
REAR RISER UP	PIN 1 to 7 PIN 5 to 10	PIN 1 to 7 PIN 5 to 10
REAR RISER DOWN	PIN 1 to 10 PIN 5 to 7	PIN 1 to 10 PIN 5 to 7

REMOVAL

(1) Disconnect and isolate the negative battery cable.

(2) Using a push pin remover or another suitable wide flat-bladed tool, gently pry the power seat switch knob off of the switch control levers (Fig. 5).

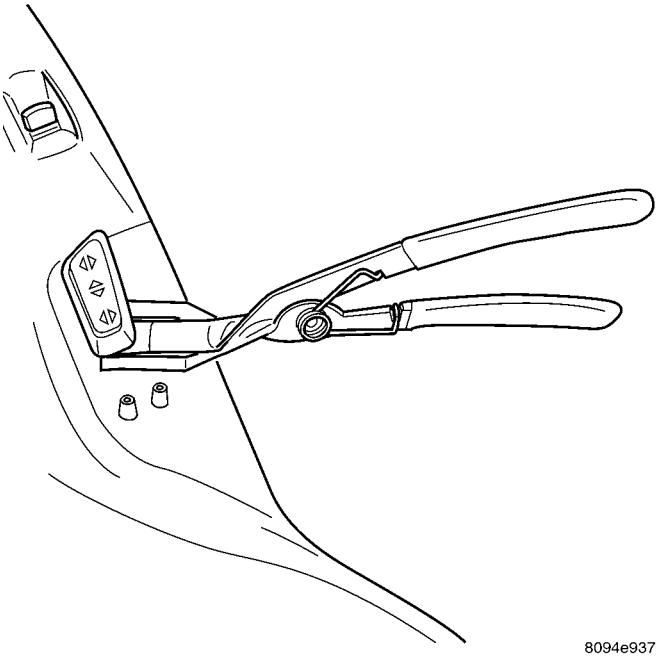

Fig. 5 Removing Power Seat Switch Control Knobs - Typical

(3) Remove the two forward-most screws that secure the outboard seat cushion side shield to the seat cushion frame.

(4) Remove the recliner handle retaining screw and remove the recliner handle.

(5) Pull the outboard seat cushion side shield away from the seat cushion frame far enough to access the power seat switch wire harness tie-strap and connector. Cut the tie-strap, if equipped.

(6) Disconnect the power seat wire harness connector from the power seat switch connector receptacle. Depress the connector retaining tab and pull straight apart.

(7) Using a very short phillips-headed screwdriver, remove the two screws that secure the power seat switch to the inside of the outboard seat cushion side shield.

(8) Remove the power seat switch from the outboard seat cushion side shield.

INSTALLATION

(1) Reconnect the power seat wire harness connector to the power seat switch connector receptacle.

(2) Position the power seat switch onto the outboard seat cushion side shield. Make certain the alignment dowel is inserted into the corresponding hole in the power seat switch.

(3) Install and tighten the two screws that secure the power seat switch to the inside of the outboard seat cushion side shield. Tighten the screws to 1.5 N·m (14 in. lbs.).

(4) Position the outboard seat cushion side shield onto the seat cushion frame

(5) Install and tighten the two screws that secure the outboard seat cushion side shield to the seat cushion frame. Tighten the screws to 1.5 N·m (14 in. lbs.).

(6) Install the recliner handle and retaining screw. Tighten the screws to 1.5 N·m (14 in. lbs.).

(7) Position the power seat switch knob onto the switch control levers and push firmly and evenly until it snaps into place.

(8) Reconnect the battery negative cable.

RIGHT POWER SEAT SWITCH

DESCRIPTION

Vehicles equipped with the power seat option utilize a six-way power seat switch. This six-way power seat switch features one seat cushion shaped knob, visible on the outboard seat cushion side shield.

The switch is secured to the back of the seat cushion side shield with two screws. However, the control knob must be removed before the seat switch can be removed from the side shield.

The individual switches internal to the power seat switch cannot be repaired. If one switch is damaged or faulty, the entire power seat switch unit must be replaced.

OPERATION

The power seat tracks can be adjusted in six different ways using the power seat switches. See the owner's manual in the vehicle glove box for more information on the power seat switch functions and the seat adjusting procedures.

When a power seat switch control knob or knobs are actuated, a battery feed and a ground path are applied through the switch contacts to the power seat track adjuster motor. The selected adjuster motor

RIGHT POWER SEAT SWITCH (Continued)

operates to move the seat track through its drive unit in the selected direction until the switch is released, or until the travel limit of the seat track is reached. When the switch is moved in the opposite direction, the battery feed and ground path to the motor are reversed through the switch contacts. This causes the adjuster motor to run in the opposite direction.

No power seat switch should be held applied in any direction after the seat track has reached its travel limit. The power seat adjuster motors each contain a self-resetting circuit breaker to protect them from overload. However, consecutive or frequent resetting of the circuit breaker must not be allowed to continue, or the motor may be damaged.

DIAGNOSIS AND TESTING - RIGHT POWER SEAT SWITCH

For complete circuit diagrams, refer to **Power Seat** in Wiring Diagrams.

(1) Disconnect and isolate the battery negative cable.

(2) Remove the power seat switch from the outboard seat cushion side shield.

(3) Use an ohmmeter to test the continuity of the power seat switch in each switch position. See the Power Seat Switch Continuity chart (Fig. 6) and switch (Fig. 7) below. If OK, refer to **Diagnosis and Testing the Power Seat Track** in this section. If not OK, replace the faulty power seat switch unit.

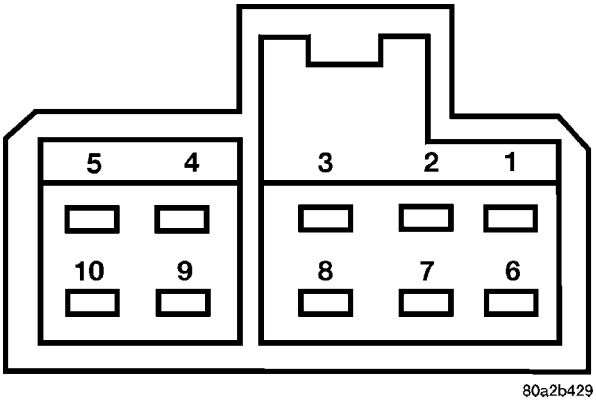

Fig. 6 Power Seat Switch Pin ID.

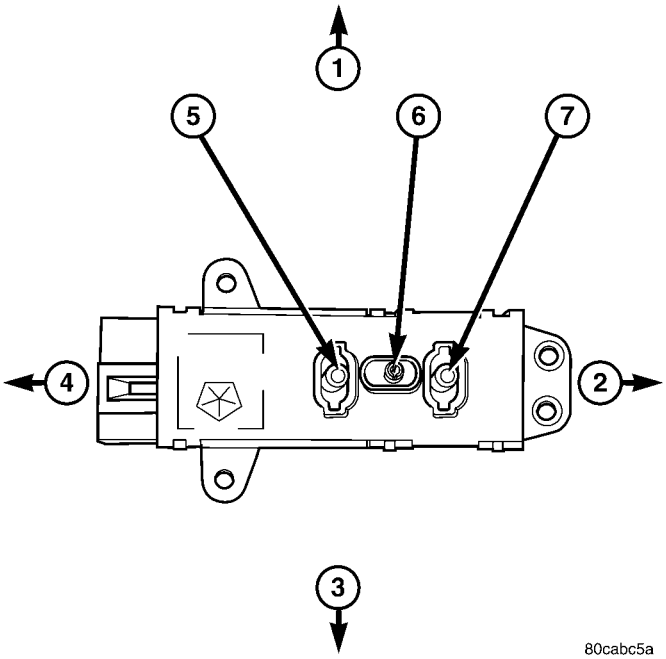

Fig. 7 Diagnosing Power Seat Switch

1 - UP
2 - REARWARD
3 - DOWN
4 - FORWARD
5 - FRONT RISER SWITCH
6 - CENTER SEAT SWITCH
7 - REAR RISER SWITCH

SWITCH POSITION	CONTINUITY BETWEEN PINS	
	DRIVER SEAT	PASSENGER SEAT
OFF	PIN 1 to 3 PIN 1 to 6 PIN 1 to 7 PIN 1 to 8 PIN 1 to 9 PIN 1 to 10	PIN 1 to 3 PIN 1 to 6 PIN 1 to 7 PIN 1 to 8 PIN 1 to 9 PIN 1 to 10
FRONT RISER UP	PIN 1 to 8 PIN 5 to 9	PIN 1 to 8 PIN 5 to 9
FRONT RISER DOWN	PIN 1 to 9 PIN 5 to 8	PIN 1 to 9 PIN 5 to 8
CENTER SWITCH FORWARD	PIN 1 to 6 PIN 5 to 3	PIN 1 to 6 PIN 5 to 3

RIGHT POWER SEAT SWITCH (Continued)

CENTER SWITCH REARWARD	PIN 1 to 3 PIN 5 to 6	PIN 1 to 3 PIN 5 to 6
REAR RISER UP	PIN 1 to 7 PIN 5 to 10	PIN 1 to 7 PIN 5 to 10
REAR RISER DOWN	PIN 1 to 10 PIN 5 to 7	PIN 1 to 10 PIN 5 to 7

REMOVAL

(1) Disconnect and isolate the negative battery cable.

(2) Using a push pin remover or another suitable wide flat-bladed tool, gently pry the power seat switch knob off of the switch control levers (Fig. 8).

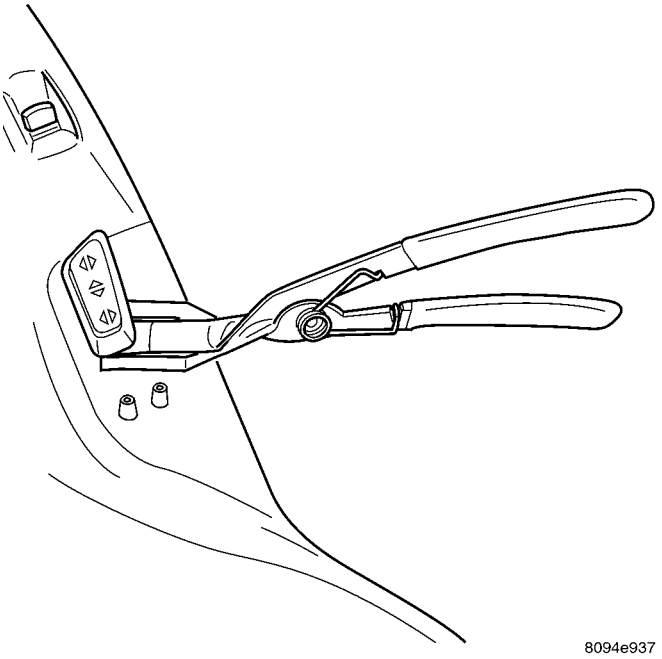

Fig. 8 Removing Power Seat Switch Control Knobs - Typical

(3) Remove the two forward-most screws that secure the outboard seat cushion side shield to the seat cushion frame.

(4) Remove the recliner handle retaining screw and remove the recliner handle.

(5) Pull the outboard seat cushion side shield away from the seat cushion frame far enough to access the power seat switch wire harness tie-strap and connector. Cut the tie-strap, if equipped.

(6) Disconnect the power seat wire harness connector from the power seat switch connector receptacle. Depress the connector retaining tab and pull straight apart.

(7) Using a very short phillips-headed screwdriver, remove the two screws that secure the power seat switch to the inside of the outboard seat cushion side shield.

(8) Remove the power seat switch from the outboard seat cushion side shield.

INSTALLATION

(1) Reconnect the power seat wire harness connector to the power seat switch connector receptacle.

(2) Position the power seat switch onto the outboard seat cushion side shield. Make certain the alignment dowel is inserted into the corresponding hole in the power seat switch.

(3) Install and tighten the two screws that secure the power seat switch to the inside of the outboard seat cushion side shield. Tighten the screws to 1.5 N·m (14 in. lbs.).

(4) Position the outboard seat cushion side shield onto the seat cushion frame

(5) Install and tighten the two screws that secure the outboard seat cushion side shield to the seat cushion frame. Tighten the screws to 1.5 N·m (14 in. lbs.).

(6) Install the recliner handle and retaining screw. Tighten the screws to 1.5 N·m (14 in. lbs.).

(7) Position the power seat switch knob onto the switch control levers and push firmly and evenly until it snaps into place.

(8) Reconnect the battery negative cable.

POWER SEAT TRACK

DESCRIPTION

The six-way power seat option includes a power seat track assembly located under each front seat (Fig. 9). The power seat track assembly replaces the standard manually operated seat tracks. The lower half of the power seat track is secured at the front with two bolts to the floor panel seat cross member, and at the rear with one bolt and one nut to the floor panel. Four bolts secure the bottom of the seat cushion frame to the upper half of the power seat track unit.

The power seat track assembly cannot be repaired, and is serviced only as a complete assembly. If any component in this assembly is faulty or damaged, the entire power seat track must be replaced.

OPERATION

The power seat track unit includes three reversible electric motors that are secured to the upper half of the track unit. Each motor moves the seat adjuster through a combination of worm-drive gearboxes and screw-type drive units. Each of the three driver side power seat track motors also has a position potenti-

POWER SEAT TRACK (Continued)

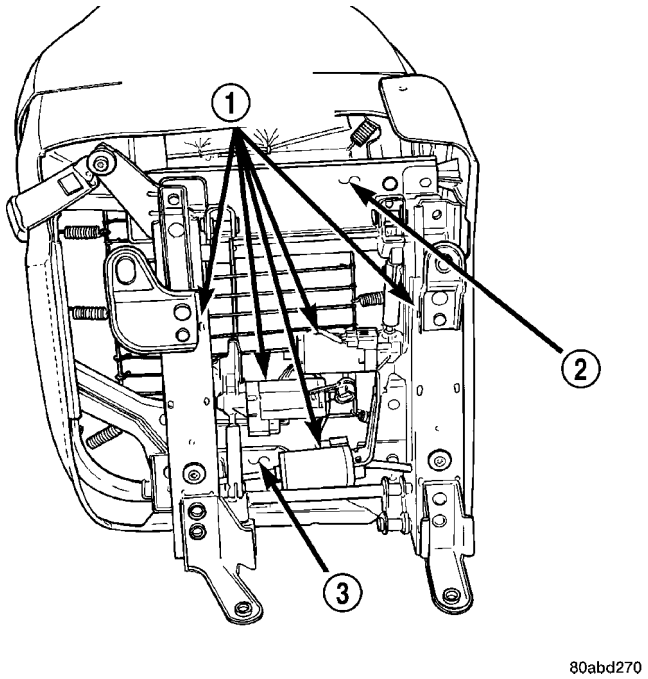

Fig. 9 Power Seat Track - Typical

1 - POWER SEAT ADJUSTER AND MOTORS
2 - SEAT CUSHION FRAME
3 - POWER SEAT TRACK ASSEMBLY

ometer integral to the motor assembly, which electronically monitors the motor position.

The front and rear of the seat are operated by two separate vertical adjustment motors. These motors can be operated independently of each other, tilting the entire seat assembly forward or rearward; or, they can be operated in unison by selecting the proper power seat switch functions, which will raise or lower the entire seat assembly. The third motor is the horizontal adjustment motor, which moves the seat track in the forward and rearward directions.

DIAGNOSIS AND TESTING - POWER SEAT TRACK

(1) Remove the power seat switch from the seat (Refer to 8 - ELECTRICAL/POWER SEATS/DRIVER SEAT SWITCH - REMOVAL).

(2) Checking the body harness side of the power seat switch electrical connector (Fig. 10), check Pin 1 for ground and Pin 5 for battery voltage. If either of these two are not present repair the body harness as required.

(3) To test the seat motors and verify proper seat responses, refer to the Seat Motor Test table below. Using two jumper wires, connect one to a battery supply and the second to a ground. Connect the other ends to the seat wire harness connector as described in the Seat Motor Test table.

SEAT TRACK MOTOR TEST

SEAT SWITCH CONNECTOR			
CONNECT JUMPER		SEAT ACTION	
B(+)	B(–)	LEFT SIDE	RIGHT SIDE
PIN 9	PIN 8	FRONT RISER UP	FRONT RISER DOWN
PIN 8	PIN 9	FRONT RISER DOWN	FRONT RISER UP
PIN 3	PIN 6	FORWARD	FORWARD
PIN 6	PIN 3	REARWARD	REARWARD
PIN 10	PIN 7	REAR RISER UP	REAR RISER DOWN
PIN 7	PIN 10	REAR RISER DOWN	REAR RISER UP

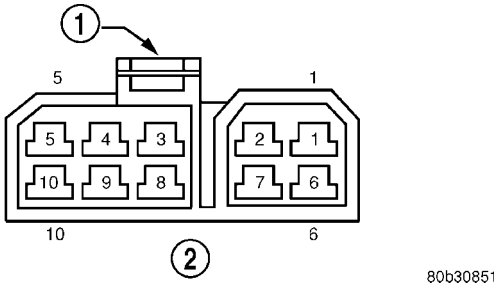

Fig. 10 Power Seat Switch Connector Pin ID.

1 - CONNECTOR RETAINING TAB
2 - VIEWED FROM BODY HARNESS END

REMOVAL

(1) Remove the appropriate seat from the vehicle. (Refer to 23 - BODY/SEATS/SEAT - REMOVAL).

(2) Remove the seat cushion side shield from the seat (Refer to 23 - BODY/SEATS/SEAT CUSHION SIDE COVERS - REMOVAL).

(3) Remove four seat track mounting bolts from cushion pan.

(4) Disconnect the power seat electrical and remove the seat track from the seat cushion.

INSTALLATION

(1) Position the seat track and install the retaining bolts in the seat cushion pan. Torque the bolts to 45-60 N·m.

(2) Route and connect the power seat electrical on the seat track and cushion pan.

(3) Install the seat cushion side shield on the seat. Refer to the Body section for the procedure.

(4) Install the seat in the vehicle (Refer to 23 - BODY/SEATS/SEAT - INSTALLATION).

(5) Connect the negative battery cable.

POWER TOP - SUNROOF

TABLE OF CONTENTS

	page
POWER TOP - SUNROOF	
DESCRIPTION	22
OPERATION	22
DIAGNOSIS AND TESTING SUNROOF	22
MOTOR/MODULE - SUNROOF	
DIAGNOSIS AND TESTING - STANDARD PROCEDURE	24
STANDARD PROCEDURE - POWER SUNROOF TIMING	25
STANDARD PROCEDURE - RE-INITIALIZATION	25
STANDARD PROCEDURE - INITIALIZATION	25
REMOVAL	26
INSTALLATION	26
SWITCH - SUNROOF	
DESCRIPTION	27
OPERATION	27
DIAGNOSIS AND TESTING SUNROOF SWITCH	27
REMOVAL	28
INSTALLATION	28

POWER TOP - SUNROOF

DESCRIPTION

WARNING: Keep fingers and other body parts out of sunroof opening at all times.

The power sunroof system allows the sunroof to be opened, closed or placed in the vent position electrically by actuating a switch located in the overhead console in between the two reading lamps. The sunroof system receives battery feed through a 30 amp circuit breaker in the junction block. The sunroof system power is supplied when the ignition switch is in the RUN and ACCESSORY positions. The sunroof will continue to operate normally with the key in the OFF position or with the key removed while the Accessory Delay System is active.

The sunroof glass panel tilts upward at the rear for ventilation and slides rearward under the roof when open. The panel seals flush with the roof in the closed position to eliminate wind noise. The sunroof includes a manual-sliding sunshade to cover the deep-tinted glass panel.

The sunroof is electrically operated from two switches located in the overhead console in between the two reading lamps. The “VENT” switch is a push button type switch and opens the sunroof to the vent position only. The other switch “OPEN/CLOSED” is a rocker type switch for opening and closing the sunroof. Pressing and releasing the open button once, the sunroof will express open and the wind deflector will raise. If the button is pressed a second time the sunroof will stop in that position. Pressing and holding the close button will close the sunroof. If the close button is released the sunroof will stop in that position.

OPERATION

This vehicle has a vent, tilt and slide power sunroof system with express (one-touch) open feature. The sunroof system receives battery feed through a 30 amp circuit breaker in the junction block. The sunroof system power is supplied when the ignition switch is in the RUN and ACCESSORY positions. The sunroof will operate normally with the key in any position while the Accessory Delay system is active.

The sunroof is electrically operated from two switches located in the overhead console in between the two reading lamps. The “VENT” switch is a push button type switch and opens the sunroof to the vent position only. The other switch “OPEN/CLOSED” is a rocker type switch for opening and closing the sunroof. Pressing and releasing the open button once, the sunroof will express open and the wind deflector will raise. If the button is pressed a second time the sunroof will stop in that position. Pressing and holding the close button will close the sunroof. If the close button is released the sunroof will stop in that position.

DIAGNOSIS AND TESTING

SUNROOF

Refer to SUNROOF DIAGNOSIS CHART for possible causes. Before beginning sunroof diagnostics verify that all other power accessories are in proper operating condition. If not, a common electrical problem may exist.

POWER TOP - SUNROOF (Continued)

Check the condition of the circuit protection and inspect all wiring connector pins for proper engagement and continuity. For complete circuit diagrams, refer to the appropriate wiring information. The wiring information includes wiring diagrams, proper wire and connector repair procedures, details of wire harness routing and retention, connector pin-out information and location views for the various wire harness connectors, splices and grounds.

SUNROOF DIAGNOSIS CHART

SYMPTOM	POSSIBLE CAUSE	CORRECTION
Sunroof completely inoperative.	Inoperative control switch.	Perform sunroof switch diagnostics, (Refer to 8 - ELECTRICAL/POWER TOP/SWITCH - DIAGNOSIS AND TESTING).
	Inoperative circuit ground between sunroof motor/module, control switch, and body harness.	Inspect ground connections and wiring. Repair as necessary.
	Inoperative power circuit between sunroof motor/module, control switch, and body harness.	Check the condition of the circuit protection and inspect all wiring. Repair as necessary.
	Inoperative sunroof motor/module.	Replace the sunroof motor/module, (Refer to 8 - ELECTRICAL/POWER TOP/MOTOR - REMOVAL).
Audible whine when switch is depressed, sunroof does not operate.	Inoperative sunroof motor/module.	Replace the sunroof motor/module, (Refer to 8 - ELECTRICAL/POWER TOP/MOTOR - REMOVAL).
	Binding cable.	Repair or replace binding cable as necessary.
Audible clicking or ratcheting when switch is pressed, sunroof does not operate.	Broken or worn drive cable.	Repair or replace binding cable as necessary.
	Worn drive motor gear.	Replace the sunroof motor/module, (Refer to 8 - ELECTRICAL/POWER TOP/MOTOR - REMOVAL).
	Mechanisms not synchronized.	Synchronize mechanisms, (Refer to 8 - ELECTRICAL/POWER TOP/MOTOR - STANDARD PROCEDURE - SUNROOF MOTOR/MODULE CALIBRATION).
Sunroof vents and opens, but does not close.	Broken or disengaged trough guide.	Repair trough guide as necessary.
	Binding cable.	Repair or replace binding cable as necessary.
	Inoperative sunroof ″CLOSE″ circuit.	Check the condition of the circuit, connections and wiring. Repair as necessary.
	Inoperative control switch.	Perform sunroof switch diagnostics, (Refer to 8 - ELECTRICAL/POWER TOP/SWITCH - DIAGNOSIS AND TESTING).
	Inoperative sunroof motor/module.	Replace the sunroof motor/module, (Refer to 8 - ELECTRICAL/POWER TOP/MOTOR - REMOVAL).

POWER TOP - SUNROOF (Continued)

SYMPTOM	POSSIBLE CAUSE	CORRECTION
Sunroof vents, but does not open.	Binding cable or mechanism.	Repair or replace binding cable as necessary.
	Inoperative sunroof ″OPEN″ circuit.	Check the condition of the circuit, connections and wiring. Repair as necessary.
	Inoperative control switch.	Perform sunroof switch diagnostics, (Refer to 8 - ELECTRICAL/POWER TOP/SWITCH - DIAGNOSIS AND TESTING).
	Inoperative sunroof motor/module.	Replace the sunroof motor/module, (Refer to 8 - ELECTRICAL/POWER TOP/MOTOR - REMOVAL).
Sunroof does not vent	Binding cable or mechanism.	Repair or replace binding cable as necessary.
	Inoperative sunroof ″VENT″ circuit.	Check the condition of the circuit, connections and wiring. Repair as necessary.
	Inoperative control switch.	Perform sunroof switch diagnostics, (Refer to 8 - ELECTRICAL/POWER TOP/SWITCH - DIAGNOSIS AND TESTING).
	Inoperative sunroof motor/module.	Replace the sunroof motor/module, (Refer to 8 - ELECTRICAL/POWER TOP/MOTOR - REMOVAL).
Glass movement not consistant or glass does not operate smoothly	Glass and Track timing. Glass and Track alignment. Cables and Guide alignment.	Perform the necessary adjustments, (Refer to 23 - BODY/SUNROOF/ GLASS PANEL - ADJUSTMENTS).

MOTOR/MODULE - SUNROOF

DIAGNOSIS AND TESTING -

For complete circuit diagrams, refer to the appropriate wiring information. The wiring information includes wiring diagrams, proper wire and connector repair procedures, details of wire harness routing and retention, connector pin-out information and location views for the various wire harness connectors, splices and grounds.

If the power top is completely inoperative perform the following diagnostic steps.

(1) Check the Accessory delay 30 amp Circuit breaker in the Junction Block. If OK, go to Step 2. If not OK, repair the shorted circuit or component as required and replace the inoperative circuit breaker.

(2) Partially remove the headliner to access the sunroof motor/module.

(3) Disconnect the motor/module electrical connector. With the ignition switch in the “RUN” position check for Battery voltage at the Accessory Relay Output terminal of the harness connector. If OK , go to Step 4. If not OK repair the Accessory Relay Output circuit as necessary.

(4) Using an ohmmeter test for continuity between the harness connector ground circuit and a known good ground. Continuity should be present. If OK go to Step 5. If not OK, repair the open ground circuit as necessary.

(5) Turn the ignition switch to the “OFF” position. Reconnect the motor/module electrical connector. With the ignition switch in the “RUN” position check for 5 volts on the “VENT”, “CLOSE” and “OPEN” control circuits at the back side of the motor/module connector. If OK, go to Step 6. If not OK replace the motor/module assembly, (Refer to 8 - ELECTRICAL/ POWER TOP/MOTOR - REMOVAL).

(6) Turn the ignition switch to the “OFF” position. Disconnect the motor/module and sunroof switch electrical connectors. Using an ohmmeter check for continuity on the “VENT”, “CLOSE” and “OPEN” circuits between the motor/module and sunroof switch. Continuity should be present. If OK, (Refer to 8 - ELECTRICAL/POWER TOP/SWITCH - DIAGNOSIS AND TESTING) for diagnosis of the sunroof switch. If not OK, repair the control circuits as necessary.

MOTOR/MODULE - SUNROOF (Continued)

STANDARD PROCEDURE

STANDARD PROCEDURE - POWER SUNROOF TIMING

NOTE: Perform the timing procedures if any of the following conditions exist:

- Glass skewed in the channel
- One side of the glass dropping before the other while moving from “VENT” to “CLOSE”
- Glass reversing direction when closing the sunroof
- Glass will not close or may stop at the wrong location
- The glass may over travel the “OPEN” position and stall the motor
- The glass may over travel the “CLOSE” position and stall the motor

NOTE: The timing of motor/module and the sunroof assembly play a critical roles in the proper function of the sunroof. If the motor/module is removed and the sunroof glass or cables are moved the sunroof module will have to be timed. REFER to the following procedure for the necessary steps.

(1) Perform the motor/module re-initialization procedure, (Refer to 8 - ELECTRICAL/POWER TOP/MOTOR - STANDARD PROCEDURE).

(2) Remove the motor/module, (Refer to 8 - ELECTRICAL/POWER TOP/MOTOR - REMOVAL).

(3) Remove sunroof glass panel (Refer to 23 - BODY/SUNROOF/GLASS PANEL - REMOVAL).

(4) Now place both right and left arms in the closed position. Using a screwdriver, push the plastic cable all the way forward in the track until the glass mounting arm drops into the closed position.

(5) Repeat this on the other side.

(6) To verify correct timing, there is an 1/8 inch hole in the cable ramp that must be aligned with the front glass mounting screw hole.

(7) Using an awl, verify alignment of both right and left timing holes. The tracks will now be timed to the fully closed position.

(8) Install the motor/module (Refer to 8 - ELECTRICAL/POWER TOP/MOTOR - INSTALLATION).

(9) Install the sunroof glass panel, (Refer to 23 - BODY/SUNROOF/GLASS PANEL - INSTALLATION).

(10) Perform the motor/module re-initialization procedure, (Refer to 8 - ELECTRICAL/POWER TOP/MOTOR - STANDARD PROCEDURE).

STANDARD PROCEDURE - RE-INITIALIZATION

NOTE: If for some reason the sunroof is not operating normally it may be necessary to re-initialize the sunroof assembly. This procedure should be attempted prior to any diagnosis of the sunroof system.

NOTE: The re-initialization procedure is not complete if any one of the following conditions occurs before the re-initialization procedure is completed:

- The sunroof switch is not held in the CLOSE position.
- The ignition or battery power is lost.
- The glass panel has not reached its closed position.

NOTE: if the re-initialization procedure is not carried out completely, it must be started over.

(1) Cycle the sunroof to full “VENT” position.

(2) Once the sunroof is in the full “VENT” position, press and continuously hold the “CLOSE” button on the sunroof switch.

(3) After a delay of 10 seconds the sunroof will begin to move past the normal “VENT” position to the **hard stop** position. It will then reverse to the normal “VENT” position also known as the **soft stop**. Once the sunroof has reversed to the **soft stop**, immediately (within 5 seconds of stopping travel) release the “CLOSE” button and continuously press it again.

(4) After a delay of three seconds the sunroof will begin moving to the “OPEN and then “CLOSED position. When the roof reaches the fully “CLOSED” position and stops the close button can be released.

The Re- initialization procedure is now complete. Operate the sunroof in all directions to verify proper operation.

STANDARD PROCEDURE - INITIALIZATION

NOTE: This procedure should be attempted any time a new motor/module is installed in the sunroof assembly. It must be performed on initial vehicle power up to be successful.

NOTE: The initialization procedure is not complete if any one of the following conditions occurs before the initialization procedure is completed:

- The sunroof switch is not held in the CLOSE position.
- The ignition or battery power is lost.

MOTOR/MODULE - SUNROOF (Continued)

- The glass panel has not reached its closed position.

NOTE: if the initialization procedure is not carried out completely, it must be started over.

(1) Turn the ignition key to the “RUN” position.
(2) Continuously press the “CLOSE” button on the sunroof switch.
(3) The sunroof will begin to move past the normal “VENT” position to the **hard stop** position. It will then reverse to the normal “VENT” position also known as the **soft stop**. Once the sunroof has reversed to the **soft stop**, immediately (within 5 seconds of stopping travel) release the “CLOSE” button and continuously press it again.
(4) After a delay of three seconds the sunroof will begin moving to the “OPEN and then “CLOSED position. When the roof reaches the fully “CLOSED” position and stops the close button can be released.

The initialization procedure is now complete. Operate the sunroof in all directions to verify proper operation.

REMOVAL

NOTE: The sunroof system is timed from the factory so that the motor/module shuts off automatically when the sunroof window reaches a certain position. Extreme care must be taken when removing the motor/module from the sunroof assembly or this timing may be thrown off causing damage to the sunroof system. Anytime the motor/module needs to be removed from the sunroof assembly the sunroof window must be in the FULLY CLOSED POSITION if possible.
If glass panel is not in the fully closed position and the motor/module is removed or inoperative, (Refer to 8 - ELECTRICAL/POWER TOP/MOTOR - STANDARD PROCEDURE).

(1) Disconnect and isolate the negative battery cable.
(2) Remove A-pillar trim (Refer to 23 - BODY/INTERIOR/A-PILLAR TRIM - REMOVAL).
(3) Remove sun visors (Refer to 23 - BODY/INTERIOR/SUN VISOR - REMOVAL).
(4) Remove map lamps/mini console, (Refer to 8 - ELECTRICAL/LAMPS/LIGHTING - INTERIOR/READING LAMP - REMOVAL).
(5) Remove the sunroof switch, (Refer to 8 - ELECTRICAL/POWER TOP/SWITCH - REMOVAL).
(6) Remove sunroof opening trim lace. (Refer to 23 - BODY/SUNROOF/OPENING TRIM LACE - REMOVAL).
(7) Remove headliner as necessary to gain access to sunroof motor/module. (Refer to 23 - BODY/INTERIOR/HEADLINER - REMOVAL).
(8) Disconnect the motor/module wire harness connectors.
(9) Remove the motor/module attaching screws.
(10) Remove motor/module from the sunroof housing assembly.

INSTALLATION

NOTE: Before installing a new motor/module or the original motor/module ensure that the sunroof glass panel is in the FULLY CLOSED POSITION. If sunroof glass panel is not in the FULLY CLOSED POSITION, (Refer to 8 - ELECTRICAL/POWER TOP/MOTOR - STANDARD PROCEDURE).

(1) Ensure that sunroof assembly is in the FULLY CLOSED position before mounting the motor/module. If not in the fully closed position (Refer to 8 - ELECTRICAL/POWER TOP/MOTOR - STANDARD PROCEDURE).
(2) Place motor/module into position on the sunroof housing and install attaching screws. Tighten the screws to 3.5 N·m (31 in. lbs.) torque.
(3) Connect the motor/module, and sunroof switch wire connectors.
(4) Install sunroof glass panel (Refer to 23 - BODY/SUNROOF/GLASS PANEL - INSTALLATION).
(5) Connect the battery negative cable.
(6) Perform the motor/module initialization procedure, (Refer to 8 - ELECTRICAL/POWER TOP/MOTOR - STANDARD PROCEDURE - MOTOR/MODULE INITIALIZATION).
(7) Verify sunroof operation and alignment, and adjust as necessary. (Refer to 23 - BODY/SUNROOF/GLASS PANEL - ADJUSTMENTS).
(8) Disconnect and isolate battery negative cable.
(9) Installing the headliner (Refer to 23 - BODY/INTERIOR/HEADLINER - INSTALLATION).
(10) Install sunroof opening trim lace. (Refer to 23 - BODY/SUNROOF/OPENING TRIM LACE - INSTALLATION).
(11) Install the sunroof switch, (Refer to 8 - ELECTRICAL/POWER TOP/SWITCH - INSTALLATION).
(12) Install the map lamps/mini console, (Refer to 8 - ELECTRICAL/LAMPS/LIGHTING - INTERIOR/READING LAMP - INSTALLATION).
(13) Install sun visors (Refer to 23 - BODY/INTERIOR/SUN VISOR - INSTALLATION).
(14) Install A-pillar trim (Refer to 23 - BODY/INTERIOR/A-PILLAR TRIM - INSTALLATION).
(15) Connect the battery negative cable.

SWITCH - SUNROOF

DESCRIPTION

The power sunroof switch is a combination push-button and rocker switch located in the overhead console in between the two reading lamps, (Fig. 1). The switch is mounted in the overhead console with four plastic retaining tabs, molded into the switch housing. The sunroof switch is a direct contact unit that is directly wired to the sunroof motor/module assembly. The sunroof switch performs the following functions:

- Power sunroof open
- Power sunroof auto open
- Power sunroof closed
- Power sunroof vent

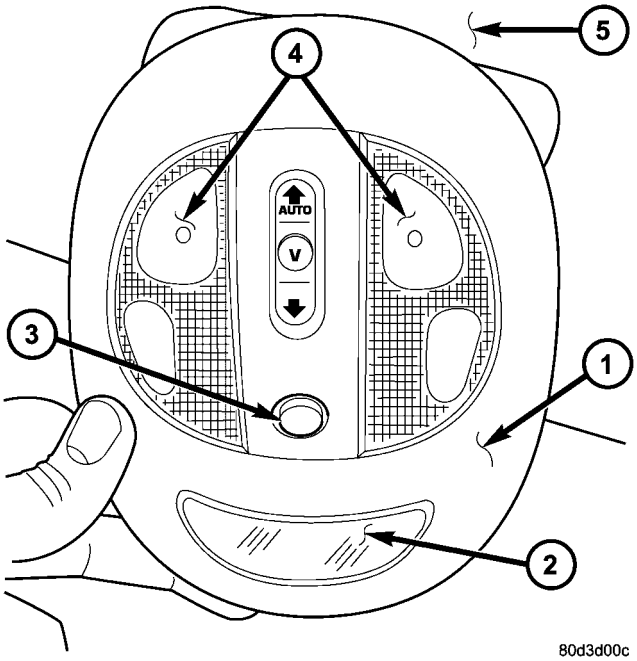

Fig. 1 Overhead Console

1 - OVERHEAD CONSOLE HOUSING
2 - DISPLAY SCREEN
3 - DISPLAY STEP BUTTON
4 - READING/COURTESY LAMPS
5 - HEADLINER

The power sunroof switch cannot be repaired. If the individual components are damaged or inoperative the switch assembly must be replaced, (Refer to 8 - ELECTRICAL/POWER TOP/SWITCH - REMOVAL).

OPERATION

The sunroof is electrically operated from two switches located on the windshield header, rearward of the map lamp. The “VENT” switch is a push button type switch and opens the sunroof to the vent position only. The other switch “OPEN/CLOSED” is a rocker type switch for opening and closing the sunroof. Pressing and releasing the open button once, the sunroof will express open and the wind deflector will raise. If the button is pressed a second time the sunroof will stop in that position. Pressing and holding the close button will close the sunroof. If the close button is released the sunroof will stop in that position.

The switch is grounded at on terminal and receives a 5 volt signal from the sunroof motor/module on the remaining three terminals. The switch pulls down the 5 volt reference voltage from the module signaling it to perform the desired function.

For complete circuit diagrams, refer to the appropriate wiring information. The wiring information includes wiring diagrams, proper wire and connector repair procedures, details of wire harness routing and retention, connector pin-out information and location views for the various wire harness connectors, splices and grounds.

DIAGNOSIS AND TESTING

SUNROOF SWITCH

For complete circuit diagrams, refer to the appropriate wiring information. The wiring information includes wiring diagrams, proper wire and connector repair procedures, details of wire harness routing and retention, connector pin-out information and location views for the various wire harness connectors, splices and grounds.

(1) Remove the power sunroof switch, (Refer to 8 - ELECTRICAL/POWER TOP/SWITCH - REMOVAL).

(2) Disconnect the power sunroof switch wire harness connector.

(3) With the ignition key in the “RUN” position check for 5 volts on the “OPEN”, “CLOSE” and “VENT” circuits of the sunroof switch harness connector. If OK, go to Step 4. If not OK, inspect the wiring harness and connectors between the motor/module and switch for damage and repair as necessary.

(4) With the ignition key in the “OFF” position check for continuity between the ground circuit of the sunroof switch harness connector and a known good ground. Continuity should be present. If OK, go to Step 5. If not OK, inspect the wiring harness and connector and repair the ground circuit as necessary.

(5) Using an ohmmeter, test the continuity of the power sunroof switch (Fig. 2) in each switch position. Refer to the POWER SUNROOF SWITCH CONTINUITY TABLE. If OK, inspect the wiring harness and connectors for damage and repair as necessary. If not OK, replace the power sunroof switch, (Refer to 8 - ELECTRICAL/POWER TOP/SWITCH - REMOVAL).

SWITCH - SUNROOF (Continued)

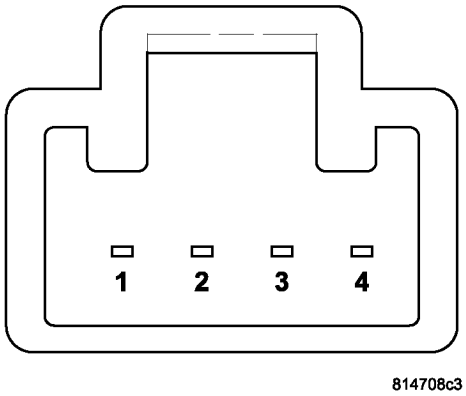

Fig. 2 SUNROOF SWITCH PINOUT

POWER SUNROOF SWITCH CONTINUITY TABLE

SWITCH POSITION	CONTINUITY BETWEEN PINS
OFF	NO CONTINUITY
SUNROOF OPEN	3 & 1
SUNROOF CLOSED	3 & 4
SUNROOF VENT	3 & 2

REMOVAL

(1) Disconnect and isolate the battery negative cable.

(2) Remove the overhead console from the headliner (Refer to 8 - ELECTRICAL/OVERHEAD CONSOLE - REMOVAL).

(3) Disconnect the switch electrical connector.

(4) To remove the switch from the overhead console, push on the back of the switch until it comes free from the overhead console.

INSTALLATION

(1) Install the switch in the overhead console assembly. Be certain the switch is securely snapped in place.

(2) Connect the sunroof control switch electrical connector. Be certain the switch connector is securely snapped in place.

(3) Install the overhead console (Refer to 8 - ELECTRICAL/OVERHEAD CONSOLE - INSTALLATION).

(4) Connect the battery negative cable.

(5) Confirm proper sunroof system operation.

POWER WINDOWS

TABLE OF CONTENTS

page

POWER WINDOWS
DESCRIPTION 29
OPERATION 29
DIAGNOSIS AND TESTING - POWER WINDOWS 29
WINDOW MOTOR
REMOVAL 30
WINDOW SWITCH
DIAGNOSIS AND TESTING - WINDOW SWITCH 30
REMOVAL 31
INSTALLATION 31

POWER WINDOWS

DESCRIPTION

The power window system allows each of the door windows to be raised and lowered electrically by actuating a switch on the center console. A master switch on the front of the center console allows the driver to raise or lower each of the passenger door windows and to lock out the individual switches on the rear of the center console from operation. The power window system receives battery feed through fuse 13 in the Power Distribution Center (PDC), only when the ignition switch is in the RUN or ACCESSORY position.

OPERATION

WINDOW SWITCH

The power window switches control the battery and ground feeds to the power window motors. Both of the rear door power window switches receive their battery and ground feeds through the circuitry of the front window switch. When the power window lockout switch is in the Lock position, the battery feed for the rear door window switches is interrupted.

WINDOW MOTOR

Front door window lift motors use permanent type magnets. The B+ and ground applied at the motor terminal pins will cause the motor to rotate in one direction. Reversing current through the motor terminals will cause the motor to rotate in the opposite direction.

Refer to the appropriate wiring information.

DIAGNOSIS AND TESTING - POWER WINDOWS

WIRING VOLTAGE TEST

The following wiring test determines whether or not voltage is continuous through the body harness to the front switch.

(1) Remove the power window switch and bezel (Refer to 8 - ELECTRICAL/POWER WINDOWS/ POWER WINDOW SWITCH - REMOVAL).

(2) Disconnect wire connector from back of power window switch.

(3) Switch ignition to the ON position.

(4) Connect the clip end of a 12 volt test light to Pin 14 of the window switch harness connector. Touch the test light probe to Pin 10.

- If the test light illuminates, the wiring circuit between the battery and switch is OK.
- If the lamp does not illuminate, first check fuse 13 in the Power Distribution Center (PDC). If fuse 13 is OK, then check for a broken wire.

Refer to the appropriate wiring information.

POWER WINDOW MOTOR TEST

If the power window motor is receiving proper current and ground and does not operate, proceed with motor test. Refer to the appropriate wiring information.

(1) Remove front door trim panel as necessary to gain access to power window motor wire connector (Refer to 23 - BODY/DOOR - FRONT/TRIM PANEL - REMOVAL).

(2) Disconnect power window motor wire connector from door harness.

(3) Using two jumper wires, connect one to a battery (+) source and the other to a good ground (-).

(4) Connect the Negative (-) jumper probe to one of the motor connector terminals.

(5) Momentarily touch the Positive (+) jumper probe to the other motor connector terminal.

POWER WINDOWS (Continued)

When positive probe is connected the motor should rotate in one direction to either move window up or down. If window is all the way up or down the motor will grunt and the inner door panel will flex when actuated in that one direction.

(6) Reverse jumper probes at the motor connector terminals and window should now move in opposite direction. If window does not move or grunt, replace the motor.

If window moved completely up or down, reverse the jumper probes and cycle window to the opposite position to verify full operation.

If motor grunts and does not move, verify that regulator is not binding.

WINDOW MOTOR

REMOVAL

The window motor is incorporated into the window regulator assembly. If the window motor requires replacement, the window regulator must be replaced. (Refer to 23 - BODY/DOOR - FRONT/WINDOW REGULATOR - REMOVAL) or (Refer to 23 - BODY/DOORS - REAR/WINDOW REGULATOR - REMOVAL).

WINDOW SWITCH

DIAGNOSIS AND TESTING - WINDOW SWITCH

(1) Remove the switch to be tested (Refer to 8 - ELECTRICAL/POWER WINDOWS/POWER WINDOW SWITCH - REMOVAL).

(2) Using an ohmmeter, Test front switch for continuity (Fig. 1).

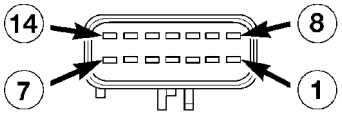

80a7e2ba

Fig. 1 FRONT WINDOW SWITCH

POWER WINDOW FRONT SWITCH TEST

SWITCH POSITION	CONTINUITY BETWEEN
OFF	14 AND 4
	14 AND 5
	14 AND 6
	14 AND 7
	14 AND 9
	14 AND 11
	14 AND 12
	14 AND 13

SWITCH POSITION	CONTINUITY BETWEEN
LEFT FRONT UP	10 AND 11
LEFT FRONT DOWN	10 AND 9
RIGHT FRONT UP	10 AND 12
RIGHT FRONT DOWN	10 AND 13
LEFT REAR UP	10 AND 5
LEFT REAR DOWN	10 AND 4
RIGHT REAR UP	10 AND 7
RIGHT REAR DOWN	10 AND 6
LOCKOUT (LOCKED)	NO CONTINUITY BETWEEN 10 AND 2
LOCKOUT (UNLOCKED)	10 AND 2

(3) If the proper results are not obtained, replace the front window switch.

(4) Test rear switch for continuity (Fig. 2).

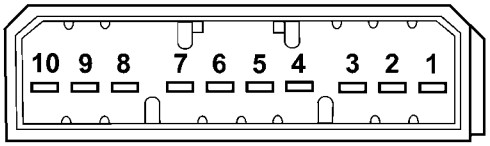

80c9b8cf

Fig. 2 REAR WINDOW SWITCH

POWER WINDOW REAR SWITCH TEST

SWITCH POSITION	CONTINUITY BETWEEN
OFF	1 AND 3
	4 AND 2
	7 AND 10
	8 AND 9
LEFT UP	10 AND 6
LEFT DOWN	6 AND 8
RIGHT UP	5 AND 2
RIGHT DOWN	5 AND 3

(5) If the proper results are not obtained, replace the rear window switch.

The power window master switch has a Auto-Down feature on both front windows. The switch is equipped with two detent positions when actuating the power window OPEN. The first detent position

WINDOW SWITCH (Continued)

allows the window to roll down and stop when the switch is released. The second detent position actuates an integral express roll down relay that rolls the window down after the switch is released. When the express down circuit senses stall current (window has reached end of down travel), the switch will turn current off to the motor. The AUTO feature can be cancelled by actuating the switch UP or DOWN while window is in motion. If the electronic circuit in the switch fails to detect a stall current, the auto down circuit will time out within 9 to 14 seconds.

REMOVAL

FRONT

(1) Disconnect and isolate the battery negative cable.

(2) Remove the shift bezel.

(3) Remove the mounting fasteners and switch (Fig. 3).

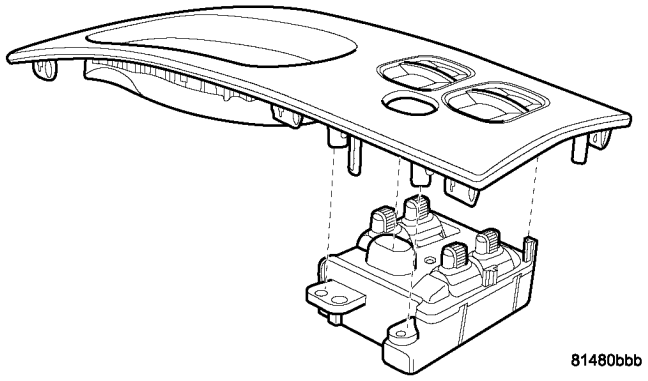

Fig. 3 FRONT WINDOW SWITCH

(4) Disconnect electrical harness connector.

REAR

(1) Disconnect and isolate the battery negative cable.

(2) Using a trim stick, gently pry the switch from the console (Fig. 4).

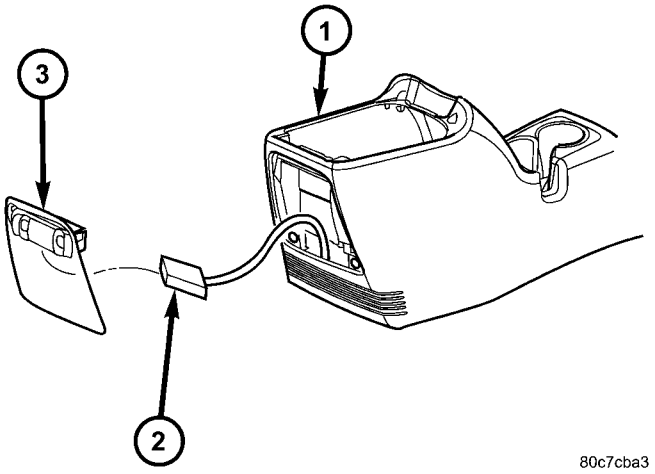

Fig. 4 REAR WINDOW SWITCH

1 - CENTER CONSOLE
2 - ELECTRICAL CONNECTOR
3 - REAR WINDOW SWITCH

(3) Disconnect electrical harness connector.

INSTALLATION

FRONT

(1) Connect electrical harness connector to switch.

(2) Install switch to shifter bezel. Install and tighten mounting fasteners.

(3) Install shifter bezel.

(4) Connect battery negative cable.

REAR

(1) Connect electrical harness connector to switch.

(2) Install switch into opening in console and press into place.

(3) Connect battery negative cable.

RESTRAINTS

TABLE OF CONTENTS

page

RESTRAINTS
DESCRIPTION 2
OPERATION 5
WARNINGS - RESTRAINT SYSTEM 6
DIAGNOSIS AND TESTING
SUPPLEMENTAL RESTRAINT SYSTEM 7
STANDARD PROCEDURE
STANDARD PROCEDURE - HANDLING NON-DEPLOYED SUPPLEMENTAL RESTRAINTS 7
STANDARD PROCEDURE - SERVICE AFTER A SUPPLEMENTAL RESTRAINT DEPLOYMENT 8
STANDARD PROCEDURE - VERIFICATION TEST 10
AIRBAG CONTROL MODULE
DESCRIPTION 11
OPERATION 11
REMOVAL 13
INSTALLATION 14
BELT TENSION SENSOR
DESCRIPTION 15
OPERATION 15
CHILD RESTRAINT ANCHOR
DESCRIPTION 15
OPERATION 17
CLOCKSPRING
DESCRIPTION 17
OPERATION 18
STANDARD PROCEDURE - CLOCKSPRING CENTERING 18
REMOVAL 19
INSTALLATION 20
CURTAIN AIRBAG
DESCRIPTION 21
OPERATION 21
REMOVAL 21
INSTALLATION 24
DRIVER AIRBAG
DESCRIPTION 25
OPERATION 26
REMOVAL 26
INSTALLATION 28
IMPACT SENSOR
DESCRIPTION
FRONT 28
SIDE 29
OPERATION
FRONT 29
SIDE 30
REMOVAL
FRONT 30
SIDE 30
INSTALLATION
FRONT 31
SIDE 32
OCCUPANT CLASSIFICATION MODULE
DESCRIPTION 32
OPERATION 33
REMOVAL 34
INSTALLATION 35
PASSENGER AIRBAG
DESCRIPTION 36
OPERATION 37
REMOVAL
AIRBAG 37
DOOR 38
BRACKETS 39
INSTALLATION
AIRBAG 39
DOOR 40
BRACKETS 41
PASSENGER AIRBAG ON/OFF INDICATOR
DESCRIPTION 41
OPERATION 41
REMOVAL 42
INSTALLATION 43
SEAT BELT BUCKLE
REMOVAL
FRONT 43
REAR 45
INSTALLATION
FRONT 45
REAR 46
SEAT BELT & RETRACTOR
REMOVAL
FRONT 46
REAR CENTER 48
REAR OUTBOARD 49
INSTALLATION
FRONT 49
REAR CENTER 51
REAR OUTBOARD 51
SEAT BELT SWITCH
DESCRIPTION 52
OPERATION 52
SEAT BELT TENSIONER
DESCRIPTION 52

OPERATION 53
SEAT BELT TURNING LOOP ADJUSTER
REMOVAL 53
INSTALLATION 54
SEAT WEIGHT SENSOR
DESCRIPTION 54
OPERATION 55
REMOVAL 55
INSTALLATION 56

RESTRAINTS

DESCRIPTION

An occupant restraint system is standard factory-installed safety equipment on this model. Available occupant restraints for this model include both active and passive types. Active restraints are those which require the vehicle occupants to take some action to employ, such as fastening a seat belt; while passive restraints require no action by the vehicle occupants to be employed (Fig. 1).

ACTIVE RESTRAINTS

The active restraints for this model include:

- **Front Seat Belts** - Both front seating positions are equipped with three-point seat belt systems employing lower B-pillar mounted inertia latch-type emergency locking retractors, height-adjustable upper B-pillar mounted turning loops, a traveling lower seat belt anchor secured to the outboard side of the seat frame, and a traveling end-release seat belt buckle secured to the inboard side of the seat frame. The driver side front seat belt buckle includes an integral Hall-effect seat belt switch that detects whether the driver side front seat belt has been fastened.
- **Rear Seat Belts** - All three rear seating positions are equipped with three-point seat belt systems. The outboard seating position belts employ lower C-pillar mounted inertia latch-type emergency locking retractors, fixed position upper C-pillar mounted turning loops, self-cinching latch plates for compatibility with child seats, and fixed lower seat belt anchors secured to the floor panel. The rear seat center seating position belt has an inertia latch-type emergency locking retractor that is integral to the rear seat back panel, and a cable from the seat back latch locks the center belt retractor spool unless the seat back is fully latched. The rear seat center seating position belt lower anchor is secured to the floor panel. All three rear seat belts have fixed end-release seat belt buckles secured to the floor panel, a single buckle unit on the right side and a double buckle unit on the left side.
- **Child Restraint Anchors** - All vehicles are equipped with three, fixed-position, child seat upper tether anchors for the rear seat. Two anchors are integral to the back of the right rear seat back panel, and one is integral to the left rear seat back panel. Two lower anchors are also provided for each outboard rear seating position. These lower anchors are accessed from the front of the rear seat where the seat back meets the seat cushion. Two lower anchors are integral to the right rear seat back panel, and two are integral to the left rear seat back panel.

PASSIVE RESTRAINTS

The passive restraints available for this model include the following:

- **Dual Front Airbags** - Multistage driver and front passenger airbags are available for this model. This airbag system is a passive, inflatable, Supplemental Restraint System (SRS) and vehicles with this equipment can be readily identified by the “SRS - AIRBAG” logo molded into the driver airbag trim cover in the center of the steering wheel and also into the passenger airbag door on the instrument panel above the glove box (Fig. 2). Vehicles with the airbag system can also be identified by the airbag indicator, which will illuminate in the El;ectroMechanical Instrument Cluster (EMIC) for about seven seconds as a bulb test each time the ignition switch is turned to the On position. A pyrotechnic-type seat belt tensioner is also integral to the driver and passenger front seat belt retractors of all airbag equipped models to work in conjunction with the dual front airbags.
- **Occupant Classification System** - Vehicles manufactured for sale in North America also include an Occupant Classification System (OCS) with components that are located on the passenger side front seat cushion. These components include an Occupant Classification Module (OCM) and a seat weight bladder and pressure sensor assembly. In addition, this system includes a belt tension sensor integral to the lower anchor of the passenger side front seat belt. Vehicles equipped with the OCS components can be readily identified by a passenger airbag on/off indicator located in the inboard end cap of the grab handle on the instrument panel above the glove box (Fig. 3).
- **Side Curtain Airbags** - Optional side curtain airbags are available for this model when it is also equipped with dual front airbags. This airbag system is a passive, inflatable, Supplemental Restraint System (SRS) and vehicles with this equipment can be readily identified by a molded identification trim button with the “SRS - AIRBAG” logo located on the headliner above each B-pillar (Fig. 2).

RESTRAINTS (Continued)

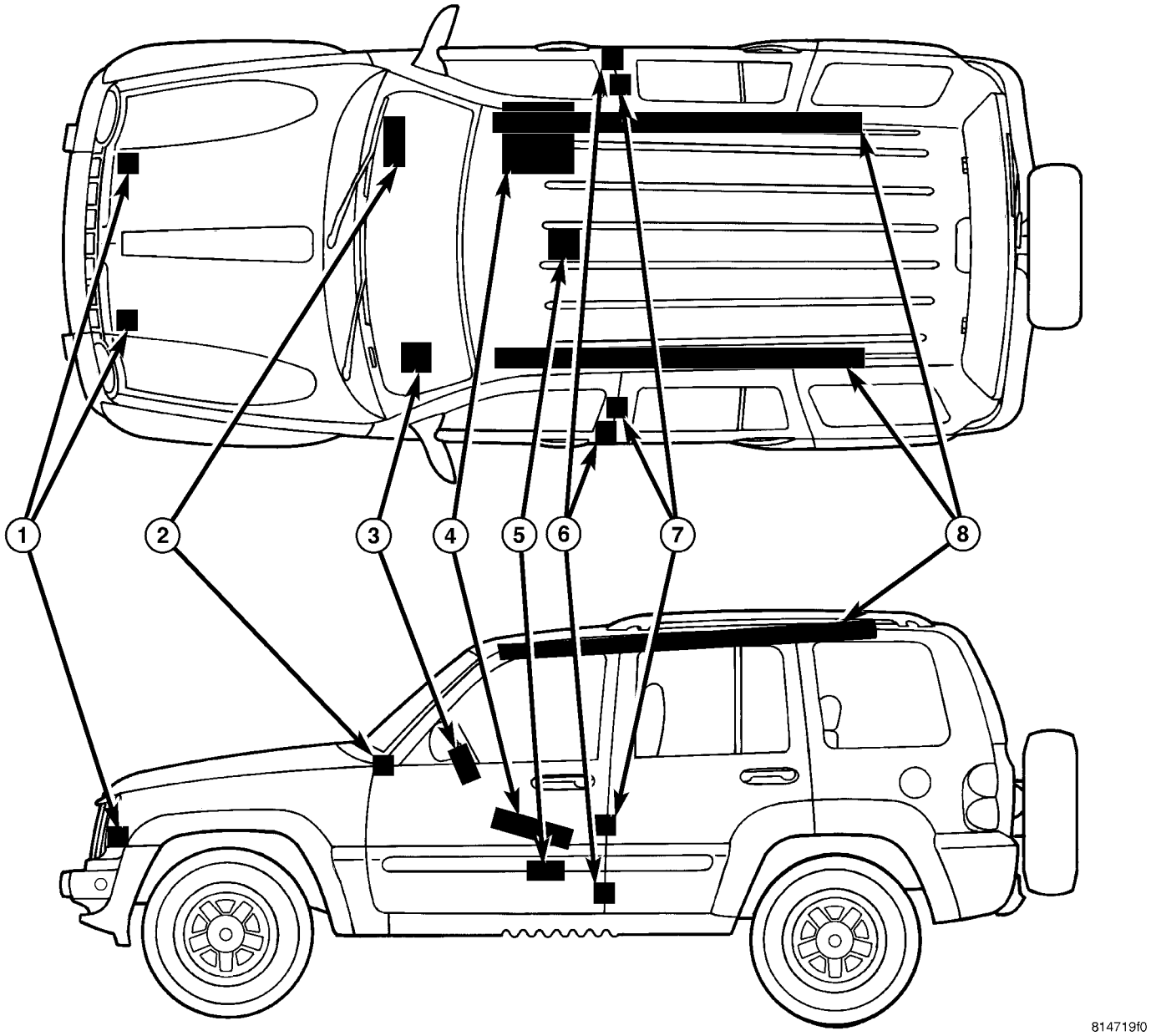

Fig. 1 Supplemental Restraint System

1 - FRONT IMPACT SENSOR (2)
2 - PASSENGER AIRBAG
3 - DRIVER AIRBAG
4 - SEAT WEIGHT BLADDER & PRESSURE SENSOR, BELT TENSION SENSOR, & OCCUPANT CLASSIFICATION MODULE (NORTH AMERICA ONLY)
5 - AIRBAG CONTROL MODULE
6 - FRONT SEAT BELT TENSIONER (2)
7 - SIDE IMPACT SENSOR (WITH SIDE CURTAIN AIRBAG ONLY - 2)
8 - SIDE CURTAIN AIRBAG (OPTIONAL - 2)

RESTRAINTS (Continued)

Fig. 2 SRS Logo

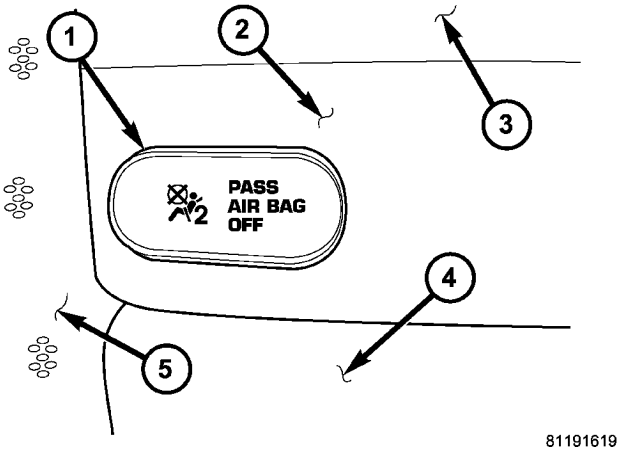

Fig. 3 Passenger Airbag On/Off Indicator

1 - PASSENGER AIRBAG ON/OFF INDICATOR
2 - INBOARD GRAB HANDLE END CAP
3 - PASSENGER AIRBAG DOOR
4 - GLOVE BOX DOOR
5 - INSTRUMENT PANEL CENTER BEZEL

The supplemental restraint system includes the following major components, which are described in further detail elsewhere in this service information:

- **Airbag Control Module** - The Airbag Control Module (ACM) is also sometimes referred to as the Occupant Restraint Controller (ORC). The ACM is located on a mount on the floor panel transmission tunnel behind the transmission gear selector, and is concealed below the center floor console.
- **Airbag Indicator** - The airbag indicator is integral to the ElectroMechanical Instrument Cluster (EMIC), which is located on the instrument panel in front of the driver.
- **Belt Tension Sensor** - Vehicles equipped with the Occupant Classification System (OCS) include a belt tension sensor. This sensor is integral to the passenger side front seat belt lower anchor which is secured to the outboard side of the passenger side front seat cushion frame.
- **Clockspring** - The clockspring is located near the top of the steering column, directly beneath the steering wheel.
- **Driver Airbag** - The driver airbag is located in the center of the steering wheel, beneath the driver airbag trim cover.
- **Driver Knee Blocker** - The driver knee blocker is a structural unit secured to the back side of and integral to the instrument panel steering column opening cover.
- **Front Impact Sensor** - Two front impact sensors are used on vehicles equipped with dual front airbags, one left side and one right side. One sensor is located on the back side of each vertical member of the radiator support.
- **Occupant Classification Module** - Vehicles equipped with the Occupant Classification System (OCS) include an Occupant Classification Module (OCM) which is secured to a stamped steel mounting bracket on the underside of the passenger side front seat cushion frame.
- **Passenger Airbag** - The passenger airbag is located on the instrument panel, beneath the passenger airbag door and above the glove box on the passenger side of the vehicle.
- **Passenger Airbag On/Off Indicator** - The Occupant Classification System (OCS) includes a passenger airbag on/off indicator which is located in the inboard grab handle end cap on the instrument panel between the passenger airbag door and the glove box. Vehicles without the OCS have only a trim bezel above the glove box, instead of a grab handle.
- **Passenger Knee Blocker** - The passenger knee blocker is a structural reinforcement that is integral to and concealed within the glove box door.
- **Seat Belt Tensioner** - A seat belt tensioner is integral to both front seat belt retractor units on vehicles equipped with dual front airbags. The seat belt retractor and tensioner units are secured to the right and left inner B-pillars and concealed beneath the lower B-pillar trim.
- **Seat Weight Sensor** - Vehicles equipped with the Occupant Classification System (OCS) include a seat weight sensor, which includes a liquid-filled bladder, a pressure sensor, and a short hose that connects the bladder to the sensor. The bladder is sandwiched between an insulator pad on the top of the passenger side front seat cushion spring and the seat cushion foam padding, while the pressure sensor is secured to the Occupant Classification Module (OCM) mounting bracket on the underside of the passenger side front seat cushion frame.
- **Side Curtain Airbag** - In vehicles equipped with this option, a side curtain airbag is secured to

RESTRAINTS (Continued)

each inside roof side rail, and extends from the A-pillar to just beyond the C-pillar. The side curtain airbags are concealed above the headliner trim.

- **Side Impact Sensor** - Two side impact sensors are used on vehicles equipped with the optional side curtain airbags, one left side and one right side. One sensor is located behind the lower B-pillar trim above the front seat belt retractor on each inner B-pillar.

The ACM, the OCM, and the EMIC each contain a microprocessor and programming that allow them to communicate with each other using the Programmable Communications Interface (PCI) data bus network. This method of communication is used by the ACM for control of the airbag indicator in the EMIC on all models equipped with dual front airbags. (Refer to 8 - ELECTRICAL/ELECTRONIC CONTROL MODULES/COMMUNICATION - DESCRIPTION).

Hard wired circuitry connects the supplemental restraint system components to each other through the electrical system of the vehicle. These hard wired circuits are integral to several wire harnesses, which are routed throughout the vehicle and retained by many different methods. These circuits may be connected to each other, to the vehicle electrical system, and to the supplemental restraint system components through the use of a combination of soldered splices, splice block connectors, and many different types of wire harness terminal connectors and insulators. Refer to the appropriate wiring information. The wiring information includes wiring diagrams, proper wire and connector repair procedures, further details on wire harness routing and retention, as well as pin-out and location views for the various wire harness connectors, splices and grounds.

OPERATION

ACTIVE RESTRAINTS

The primary passenger restraints in this or any other vehicle are the standard equipment factory-installed seat belts and child restraint anchors. Seat belts and child restraint anchors are referred to as an active restraint because the vehicle occupants are required to physically fasten and properly adjust these restraints in order to benefit from them. See the owner's manual in the vehicle glove box for more information on the features, use and operation of all of the factory-installed active restraints.

PASSIVE RESTRAINTS

The passive restraints are referred to as a supplemental restraint system because they were designed and are intended to enhance the protection for the occupants of the vehicle **only** when used in conjunction with the seat belts. They are referred to as passive restraints because the vehicle occupants are not required to do anything to make them operate; however, the vehicle occupants must be wearing their seat belts in order to obtain the maximum safety benefit from the factory-installed supplemental restraint system.

The supplemental restraint system electrical circuits are continuously monitored and controlled by a microprocessor and software contained within the Airbag Control Module (ACM). An airbag indicator in the ElectroMechanical Instrument Cluster (EMIC) illuminates for about seven seconds as a bulb test each time the ignition switch is turned to the On or Start positions. Following the bulb test, the airbag indicator is turned on or off by the ACM to indicate the status of the supplemental restraint system. If the airbag indicator comes on at any time other than during the bulb test, it indicates that there is a problem in the supplemental restraint system electrical circuits. Such a problem may cause airbags not to deploy when required, or to deploy when not required.

Deployment of the supplemental restraints depends upon the angle and severity of an impact. Deployment is not based upon vehicle speed; rather, deployment is based upon the rate of deceleration as measured by the forces of gravity (G force) upon the impact sensors. When an impact is severe enough, the microprocessor in the ACM signals the inflator of the appropriate airbag units to deploy their airbag cushions. The front seat belt tensioners are provided with a deployment signal by the ACM in conjunction with the front airbags.

During a frontal vehicle impact, the knee blockers work in concert with properly fastened and adjusted seat belts to restrain both the driver and the front seat passenger in the proper position for an airbag deployment. The knee blockers also absorb and distribute the crash energy from the driver and the front seat passenger to the structure of the instrument panel. The seat belt tensioners remove the slack from the front seat belts to provide further assurance that the driver and front seat passenger are properly positioned and restrained for an airbag deployment.

Typically, the vehicle occupants recall more about the events preceding and following a collision than they do of an airbag deployment itself. This is because the airbag deployment and deflation occur very rapidly. In a typical 48 kilometer-per-hour (30 mile-per-hour) barrier impact, from the moment of impact until the airbags are fully inflated takes about 40 milliseconds. Within one to two seconds from the moment of impact, the airbags are almost entirely deflated. The times cited for these events are approximations, which apply only to a barrier impact

RESTRAINTS (Continued)

at the given speed. Actual times will vary somewhat, depending upon the vehicle speed, impact angle, severity of the impact, and the type of collision.

When the ACM monitors a problem in any of the dual front airbag system circuits or components, including the seat belt tensioners, it stores a fault code or Diagnostic Trouble Code (DTC) in its memory circuit and sends an electronic message to the EMIC to turn on the airbag indicator. Proper testing of the supplemental restraint system components, the Programmable Communications Interface (PCI) data bus, the electronic message inputs to and outputs from the EMIC or the ACM, as well as the retrieval or erasure of a DTC from the ACM or the EMIC requires the use of a diagnostic scan tool. Refer to the appropriate diagnostic information.

See the owner's manual in the vehicle glove box for more information on the features, use and operation of all of the factory-installed passive restraints.

OCCUPANT CLASSIFICATION SYSTEM

Vehicles manufactured for the North American market are equipped with the Occupant Classification System (OCS). The OCS automatically suppresses or enables passenger airbag and seat belt tensioner operation based upon whether or not the passenger side front seat is occupied and, if the seat is occupied, classifies the size of the occupant and whether the seat is occupied by a child seat.

The OCS has an Occupant Classification Module (OCM) that monitors inputs from the seat weight bladder pressure sensor under the passenger side front seat cushion and from the belt tension sensor on the passenger side front seat belt lower anchor. Based upon those inputs the microprocessor within the OCM classifies the occupant of the passenger side front seat. The OCM then sends electronic occupant classification messages to the Airbag Control Module (ACM). The microprocessor and programming of the ACM determines whether to enable or disable the deployment circuits for the passenger airbag and seat belt tensioner; and, if enabled, what force level should be used to deploy each front airbag.

The OCS electrical circuits and components are continuously monitored by the OCM, and the OCM is continuously monitored by the ACM. A passenger airbag on/off indicator is located in the inboard end cap of the instrument panel grab handle. This indicator receives battery current whenever the ignition switch is in the On or Start positions, and illuminates only when the ACM pulls the indicator control circuit to ground. The indicator illuminates for about seven seconds as a bulb test each time the ignition switch is turned to the On or Start positions. Following the bulb test, the indicator is turned on or off by the ACM based upon the electronic occupant classification messages received from the OCM. This indicator is illuminated whenever the passenger airbag and seat belt tensioner operation has been suppressed, and is turned off whenever the seat is empty or when the seat is occupied and the passenger airbag and seat belt tensioner are enabled.

When the OCM monitors a problem in any of the OCS circuits or components, it stores a fault code or DTC in its memory circuit and sends an electronic message to the ACM. The ACM then sends an electronic message to the EMIC to turn on the airbag indicator. If for any reason the OCM is unable to classify the occupant it sends an electronic message to the ACM, and the ACM suppresses passenger airbag and seat belt tensioner operation. Proper testing of the OCS components, the Programmable Communications Interface (PCI) data bus, the electronic message inputs to and outputs from the OCM, the EMIC or the ACM, as well as the retrieval or erasure of a DTC from the OCM, the ACM or the EMIC requires the use of a diagnostic scan tool. Refer to the appropriate diagnostic information.

See the owner's manual in the vehicle glove box for more information on the features, use and operation of the OCS.

WARNINGS - RESTRAINT SYSTEM

WARNING: To avoid personal injury or death, during and following any seat belt or child restraint anchor service, carefully inspect all seat belts, buckles, mounting hardware, retractors, tether straps, and anchors for proper installation, operation, or damage. Replace any belt that is cut, frayed, or torn. Straighten any belt that is twisted. Tighten any loose fasteners. Replace any belt that has a damaged or inoperative buckle or retractor. Replace any belt that has a bent or damaged latch plate or anchor plate. Replace any child restraint anchor or the unit to which the anchor is integral that has been bent or damaged. Never attempt to repair a seat belt or child restraint component. Always replace damaged or faulty seat belt and child restraint components with the correct, new and unused replacement parts listed in the DaimlerChrysler Mopar Parts Catalog.

RESTRAINTS (Continued)

WARNING: To avoid personal injury or death, on vehicles equipped with airbags, disable the supplemental restraint system before attempting any steering wheel, steering column, airbag, occupant classification system, seat belt tensioner, impact sensor, or instrument panel component diagnosis or service. Disconnect and isolate the battery negative (ground) cable, then wait two minutes for the system capacitor to discharge before performing further diagnosis or service. This is the only sure way to disable the supplemental restraint system. Failure to take the proper precautions could result in accidental airbag deployment.

WARNING: To avoid personal injury or death on vehicles equipped with airbags, before performing any welding operations disconnect and isolate the battery negative (ground) cable and disconnect all wire harness connectors from the Airbag Control Module (ACM). Failure to take the proper precautions could result in accidental airbag deployment and other possible damage to the supplemental restraint system circuits and components.

WARNING: To avoid personal injury or death, do not attempt to dismantle an airbag unit or tamper with its inflator. Do not puncture, incinerate, or bring into contact with electricity. Do not store at temperatures exceeding 93° C (200° F). An airbag inflator unit may contain sodium azide and potassium nitrate. These materials are poisonous and extremely flammable. Contact with acid, water, or heavy metals may produce harmful and irritating gases (sodium hydroxide is formed in the presence of moisture) or combustible compounds. An airbag inflator unit may also contain a gas canister pressurized to over 2500 psi.

WARNING: To avoid personal injury or death, when handling a seat belt tensioner retractor, proper care should be exercised to keep fingers out from under the retractor cover and away from the seat belt webbing where it exits from the retractor cover.

WARNING: To avoid personal injury or death, replace all restraint system components only with parts specified in the DaimlerChrysler Mopar Parts Catalog. Substitute parts may appear interchangeable, but internal differences may result in inferior occupant protection.

WARNING: To avoid personal injury or death, the fasteners, screws, and bolts originally used for the restraint system components must never be replaced with any substitutes. These fasteners have special coatings and are specifically designed for the restraint system. Any time a new fastener is needed, replace it with the correct fasteners provided in the service package or specified in the DaimlerChrysler Mopar Parts Catalog.

WARNING: To avoid personal injury or death, when a steering column has an airbag unit attached, never place the column on the floor or any other surface with the steering wheel or airbag unit face down.

DIAGNOSIS AND TESTING

SUPPLEMENTAL RESTRAINT SYSTEM

Proper diagnosis and testing of the supplemental restraint system components, the Programmable Communications Interface (PCI) data bus, the data bus electronic message inputs to and outputs from the ElectroMechanical Instrument Cluster (EMIC), the Airbag Control Module (ACM), or the Occupant Classification Module (OCM) as well as the retrieval or erasure of a Diagnostic Trouble Code (DTC) from the ACM or OCM requires the use of a diagnostic scan tool. Refer to the appropriate diagnostic information.

WARNING: To avoid personal injury or death, on vehicles equipped with airbags, disable the supplemental restraint system before attempting any steering wheel, steering column, airbag, occupant classification system, seat belt tensioner, impact sensor, or instrument panel component diagnosis or service. Disconnect and isolate the battery negative (ground) cable, then wait two minutes for the system capacitor to discharge before performing further diagnosis or service. This is the only sure way to disable the supplemental restraint system. Failure to take the proper precautions could result in accidental airbag deployment.

STANDARD PROCEDURE

STANDARD PROCEDURE - HANDLING NON-DEPLOYED SUPPLEMENTAL RESTRAINTS

At no time should any source of electricity be permitted near the inflator on the back of a non-deployed airbag or seat belt tensioner. When carrying a non-deployed airbag, the trim cover or airbag cushion side of the unit should be pointed away from the body to minimize injury in the event of an accidental

deployment. If the airbag unit is placed on a bench or any other surface, the trim cover or airbag cushion side of the unit should be face up to minimize movement in the event of an accidental deployment.

When handling a non-deployed seat belt tensioner, take proper care to keep fingers out from under the retractor cover and away from the seat belt webbing where it exits from the retractor cover. In addition, the supplemental restraint system should be disarmed whenever any steering wheel, steering column, seat belt tensioner, driver airbag, passenger airbag, Occupant Classification System (OCS), front impact sensor, side impact sensor, side curtain airbag, or instrument panel components require diagnosis or service. Failure to observe this warning could result in accidental airbag deployment and possible personal injury.

All damaged, faulty or non-deployed airbags and seat belt tensioners which are replaced on vehicles are to be handled and disposed of properly. If an airbag or seat belt tensioner unit is faulty or damaged and non-deployed, refer to the Hazardous Substance Control System for proper disposal. Dispose of all non-deployed and deployed airbags and seat belt tensioners in a manner consistent with state, provincial, local and federal regulations.

SUPPLEMENTAL RESTRAINT STORAGE

Airbags and seat belt tensioners must be stored in their original, special container until they are used for service. Also, they must be stored in a clean, dry environment; away from sources of extreme heat, sparks, and high electrical energy. Always place or store any airbag on a surface with its trim cover or airbag cushion side facing up, to minimize movement in case of an accidental deployment.

STANDARD PROCEDURE - SERVICE AFTER A SUPPLEMENTAL RESTRAINT DEPLOYMENT

Any vehicle which is to be returned to use following a supplemental restraint deployment, must have the deployed restraints replaced. In addition, if the driver airbag has been deployed, the clockspring must be replaced. If the passenger airbag is deployed, the passenger airbag door and both passenger airbag mounting brackets must be replaced. The seat belt tensioners are deployed by the same signal that deploys the driver and passenger airbags and must also be replaced if either front airbag has been deployed. If a side curtain airbag has been deployed, the complete airbag unit, the headliner, as well as the upper A, B, C and D-pillar trim must be replaced. These components are not intended for reuse and will be damaged or weakened as a result of a supplemental restraint deployment, which may or may not be obvious during a visual inspection.

On vehicles with an optional sunroof, the sunroof drain tubes and hoses must be closely inspected following a side curtain airbag deployment. It is also critical that the mounting surfaces and/or mounting brackets for the Airbag Control Module (ACM), side impact sensors, and front impact sensors be closely inspected and restored to their original conditions following any vehicle impact damage. Because the ACM and each front and side impact sensor are used by the supplemental restraint system to monitor or confirm the direction and severity of a vehicle impact, improper orientation or insecure fastening of these components may cause airbags not to deploy when required, or to deploy when not required.

All other vehicle components should be closely inspected following any supplemental restraint deployment, but are to be replaced only as required by the extent of the visible damage incurred.

AIRBAG SQUIB STATUS

Multistage airbags with multiple initiators (squibs) must be checked to determine that all squibs were used during the deployment event. The driver and passenger airbags in this model are deployed by electrical signals generated by the Airbag Control Module (ACM) through the driver or passenger squib 1 and squib 2 circuits to the two initiators in the airbag inflators. Typically, both initiators are used and all potentially hazardous chemicals are burned during an airbag deployment event. However, it is possible for only one initiator to be used due to an airbag system fault; therefore, it is always necessary to confirm that both initiators have been used in order to avoid the improper handling or disposal of potentially live pyrotechnic or hazardous materials. The following procedure should be performed using a diagnostic scan tool to verify the status of both airbag squibs before either deployed airbag is removed from the vehicle for disposal.

CAUTION: Deployed front airbags having two initiators (squibs) in the airbag inflator may or may not have live pyrotechnic material within the inflator. Do not dispose of these airbags unless you are sure of complete deployment. Refer to the Hazardous Substance Control System for proper disposal procedures. Dispose of all non-deployed and deployed airbags and seat belt tensioners in a manner consistent with state, provincial, local, and federal regulations.

(1) Be certain that the diagnostic scan tool contains the latest version of the proper diagnostic software. Connect the scan tool to the 16-way Data Link Connector (DLC). The DLC is located on the driver side lower edge of the instrument panel, inboard of the steering column.

RESTRAINTS (Continued)

(2) Turn the ignition switch to the On position.

(3) Using the scan tool, read and record the active (current) Diagnostic Trouble Code (DTC) data.

Using the active DTC information, refer to the **Airbag Squib Status** table to determine the status of both driver and/or passenger airbag squibs.

AIRBAG SQUIB STATUS		
IF the Active DTC is:	**Conditions**	**Squib Status**
Driver or Passenger Squib 1 open Driver or Passenger Squib 2 open	**AND** the stored DTC minutes for both Driver or Passenger squibs are within 15 minutes of each other	Both Squib 1 and 2 were used.
Driver or Passenger Squib 1 open Driver or Passenger Squib 2 open	**AND** the stored DTC minutes for Driver or Passenger Squib 2 open is GREATER than the stored DTC minutes for Driver or Passenger Squib 1 by 15 minutes or more	Squib 1 was used; Squib 2 is live.
Driver or Passenger Squib 1 open Driver or Passenger Squib 2 open	**AND** the stored DTC minutes for Driver or Passenger Squib 1 open is GREATER than the stored DTC minutes for Driver or Passenger Squib 2 by 15 minutes or more	Squib 1 is live; Squib 2 was used.
Driver or Passenger Squib 1 open	**AND** Driver or Passenger Squib 2 open is NOT an active code	Squib 1 was used; Squib 2 is live.
Driver or Passenger Squib 2 open	**AND** Driver or Passenger Squib 1 open is NOT an active code	Squib 1 is live; Squib 2 was used.

If none of the Driver or Passenger Squib 1 or 2 open are active codes, the status of the airbag squibs is unknown. In this case the airbag should be handled and disposed of as if the squibs were both live.

CLEANUP PROCEDURE

Following a supplemental restraint deployment, the vehicle interior will contain a powdery residue. This residue consists primarily of harmless particulate by-products of the small pyrotechnic charge that initiates the propellant used to deploy a supplemental restraint. However, this residue may also contain traces of sodium hydroxide powder, a chemical by-product of the propellant material that is used to generate the inert gas that inflates the airbag. Since sodium hydroxide powder can irritate the skin, eyes, nose, or throat, be certain to wear safety glasses, rubber gloves, and a long-sleeved shirt during cleanup (Fig. 4).

WARNING: To avoid personal injury or death, if you experience skin irritation during cleanup, run cool water over the affected area. Also, if you experience irritation of the nose or throat, exit the vehicle for fresh air until the irritation ceases. If irritation continues, see a physician.

(1) Begin the cleanup by using a vacuum cleaner to remove any residual powder from the vehicle interior. Clean from outside the vehicle and work your way inside, so that you avoid kneeling or sitting on a non-cleaned area.

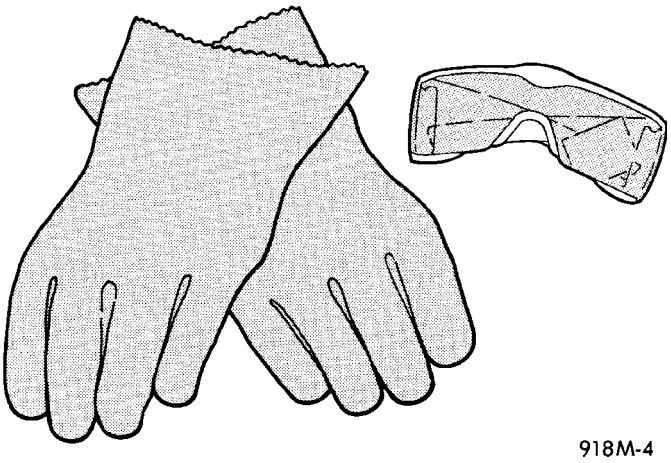

Fig. 4 Wear Safety Glasses and Rubber Gloves - Typical

(2) Be certain to vacuum the heater and air conditioning outlets as well (Fig. 5). Run the heater and air conditioner blower on the lowest speed setting and vacuum any powder expelled from the outlets.

RESTRAINTS (Continued)

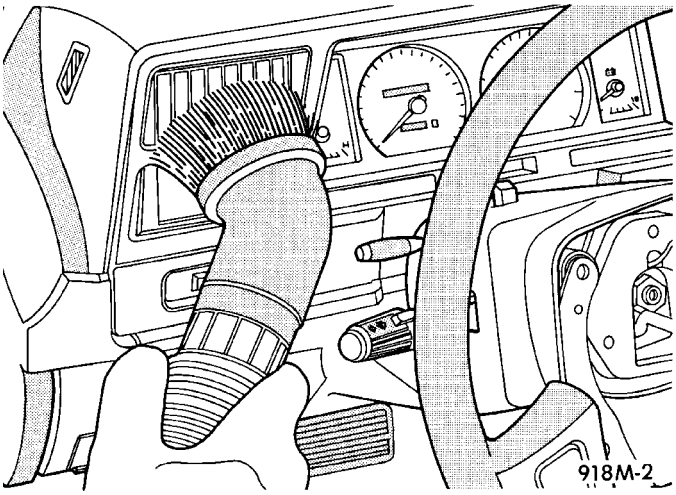

Fig. 5 Vacuum Heater and A/C Outlets - Typical

CAUTION: Deployed front airbags having two initiators (squibs) in the airbag inflator may or may not have live pyrotechnic material within the inflator. Do not dispose of these airbags unless you are sure of complete deployment. Refer to AIRBAG SQUIB STATUS. All damaged, faulty, or non-deployed supplemental restraints which are replaced on vehicles are to be handled and disposed of properly. If an airbag or seat belt tensioner unit is faulty or damaged and non-deployed, refer to the Hazardous Substance Control System for proper disposal. Be certain to dispose of all non-deployed and deployed supplemental restraints in a manner consistent with state, provincial, local and federal regulations.

(3) Next, remove the deployed supplemental restraints from the vehicle. Refer to the appropriate service removal procedures.

(4) You may need to vacuum the interior of the vehicle a second time to recover all of the powder.

STANDARD PROCEDURE - VERIFICATION TEST

The following procedure should be performed using a diagnostic scan tool to verify proper supplemental restraint system operation following the service or replacement of any supplemental restraint system component. In addition, if the vehicle is equipped with the Occupant Classification System and one of the passenger front seat supplemental restraint components has been replaced, following successful completion of the supplemental restraint system verification test procedure, perform the Occupant Classification System Verification Test using a DRBIII® scan tool. Refer to the appropriate diagnostic procedures.

WARNING: To avoid personal injury or death, on vehicles equipped with airbags, disable the supplemental restraint system before attempting any steering wheel, steering column, airbag, occupant classification system, seat belt tensioner, impact sensor, or instrument panel component diagnosis or service. Disconnect and isolate the battery negative (ground) cable, then wait two minutes for the system capacitor to discharge before performing further diagnosis or service. This is the only sure way to disable the supplemental restraint system. Failure to take the proper precautions could result in accidental airbag deployment.

(1) During the following test, the battery negative cable remains disconnected and isolated, as it was during the supplemental restraint system component removal and installation procedures.

(2) Be certain that the diagnostic scan tool contains the latest version of the proper diagnostic software. Connect the scan tool to the 16-way Data Link Connector (DLC). The DLC is located on the driver side lower edge of the instrument panel, inboard of the steering column (Fig. 6).

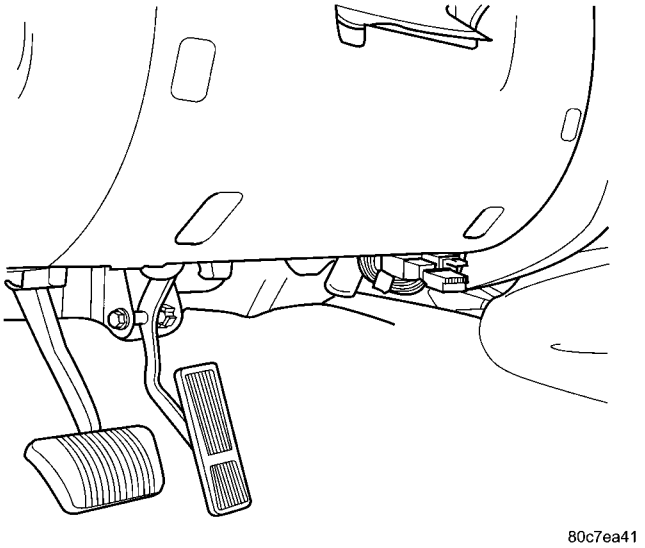

Fig. 6 16-Way Data Link Connector

(3) Turn the ignition switch to the On position and exit the vehicle with the scan tool.

(4) Check to be certain that nobody is in the vehicle, then reconnect the battery negative cable.

(5) Using the scan tool, read and record the active (current) Diagnostic Trouble Code (DTC) data.

(6) Next, use the scan tool to read and record any stored (historical) DTC data.

(7) If any DTC is found in Step 5 or Step 6, refer to the appropriate diagnostic information.

(8) Use the scan tool to erase the stored DTC data. If any problems remain, the stored DTC data will not erase. Refer to the appropriate diagnostic information to diagnose any stored DTC that will not erase. If the stored DTC information is successfully erased, go to Step 9.

RESTRAINTS (Continued)

(9) Turn the ignition switch to the Off position for about fifteen seconds, and then back to the On position. Observe the airbag indicator in the instrument cluster. It should illuminate for six to eight seconds, and then go out. This indicates that the supplemental restraint system is functioning normally and that the repairs are complete. If the airbag indicator fails to light, or lights and stays on, there is still an active supplemental restraint system fault or malfunction. Refer to the appropriate diagnostic information to diagnose the problem.

AIRBAG CONTROL MODULE

DESCRIPTION

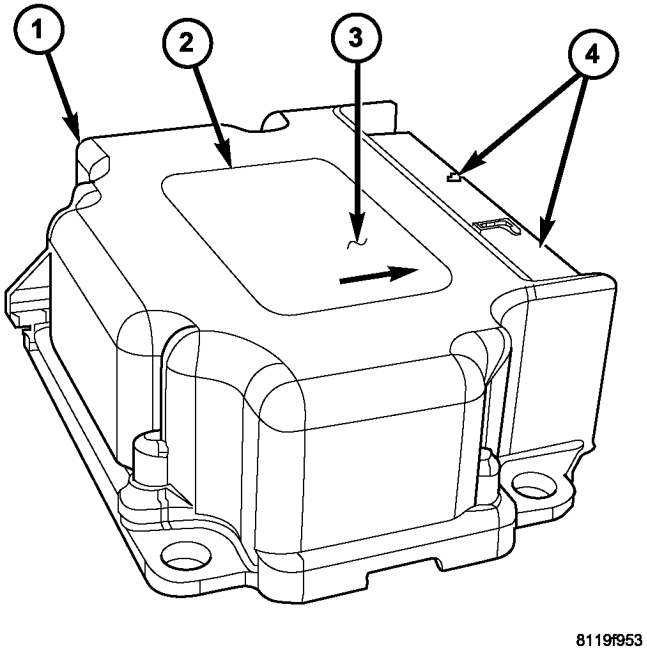

Fig. 7 Airbag Control Module

1 - AIRBAG CONTROL MODULE
2 - LABEL
3 - ORIENTATION ARROW
4 - CONNECTOR RECEPTACLE (2)

The Airbag Control Module (ACM) is also sometimes referred to as the Occupant Restraint Controller (ORC) (Fig. 7). The ACM is secured with three screws to a stamped steel mounting bracket welded onto the top of the floor panel transmission tunnel just forward of the park brake mechanism and beneath the center floor console in the passenger compartment of the vehicle. Concealed within a hollow in the center of the die cast aluminum ACM housing is the electronic circuitry of the ACM which includes a microprocessor, an electronic impact sensor, an electronic safing sensor, and an energy storage capacitor. A stamped metal cover plate is secured to the bottom of the ACM housing with four screws to enclose and protect the internal electronic circuitry and components.

An arrow printed on the label on the top of the ACM housing provides a visual verification of the proper orientation of the unit, and should always be pointed toward the front of the vehicle. The ACM housing has integral mounting flanges on three corners. The mounting flange to the right of the connector receptacle has an integral locating pin on its lower surface. Both right side flanges have round mounting holes, while the flange on the left side has a slotted mounting hole. A molded plastic electrical connector with two receptacles, one containing twenty-four terminal pins and the other containing thirty-two terminal pins, exits the forward facing side of the ACM housing. These terminal pins connect the ACM to the vehicle electrical system through two dedicated take outs and connectors, one from the instrument panel wire harness and the other from the body wire harness.

A molded plastic protective cover is installed over the ACM to protect the unit from condensation or water intrusion. Integral latch tabs on each side of the cover engage slots on each side at the base of the ACM housing to secure the cover in place over the ACM.

The impact sensor and safing sensor internal to the ACM are calibrated for the specific vehicle, and are only serviced as a unit with the ACM. In addition, there are unique versions of the ACM for vehicles with or without the optional side curtain airbags. The ACM cannot be repaired or adjusted and, if damaged or faulty, it must be replaced. The ACM cover is available for individual service replacement.

OPERATION

The microprocessor in the Airbag Control Module (ACM) contains the supplemental restraint system logic circuits and controls all of the supplemental restraint system components. The ACM uses On-Board Diagnostics (OBD) and can communicate with other electronic modules in the vehicle as well as with the diagnostic scan tool using the Programmable Communications Interface (PCI) data bus. This method of communication is used for control of the airbag indicator in the ElectroMechanical Instrument Cluster (EMIC) and for supplemental restraint system diagnosis and testing through the 16-way data link connector located on the driver side lower edge of the instrument panel. (Refer to 8 - ELECTRICAL/INSTRUMENT CLUSTER/AIRBAG INDICATOR - OPERATION).

The ACM microprocessor continuously monitors all of the supplemental restraint system electrical circuits to determine the system readiness. If the ACM

AIRBAG CONTROL MODULE (Continued)

detects a monitored system fault, it sets an active and stored Diagnostic Trouble Code (DTC) and sends electronic messages to the EMIC over the PCI data bus to turn on the airbag indicator. An active fault only remains for the duration of the fault, or in some cases for the duration of the current ignition switch cycle, while a stored fault causes a DTC to be stored in memory by the ACM. For some DTCs, if a fault does not recur for a number of ignition cycles, the ACM will automatically erase the stored DTC. For other internal faults, the stored DTC is latched forever.

The ACM also monitors a Hall effect-type seat belt switch located in the buckle of the driver side front seat belt to determine whether that seat belt is buckled, and provides an input to the EMIC over the PCI data bus to control the seatbelt indicator operation based upon the status of the driver side front seat belt switch.

On models equipped with the Occupant Classification System (OCS), the ACM communicates with the Occupant Classification Module (OCM) over the PCI data bus. The ACM stores OCS calibration data for retrieval when the OCM must be replaced with a new unit. The ACM will internally disable the passenger airbag and seat belt tensioner deployment circuits if the OCM detects that the passenger side front seat is unoccupied or that it is occupied by a load that is inappropriate for an airbag deployment. The ACM also provides a control output to the passenger airbag on/off indicator through the passenger airbag on/off indicator driver circuit. The OCM notifies the ACM when it has detected a monitored system fault and stored a DTC in its memory for any faulty OCS component or circuit, then the ACM sets a DTC and controls the airbag indicator operation accordingly.

The ACM receives battery current through two circuits; a fused ignition switch output (run) circuit through a fuse in the Junction Block (JB), and a fused ignition switch output (run-start) circuit through a second fuse in the JB. The ACM receives ground through a ground circuit and take out of the body wire harness. This take out has a single eyelet terminal connector that is secured by a ground screw to the top of the right front seat riser on the floor panel beneath the right front seat. These connections allow the ACM to be operational whenever the ignition switch is in the Start or On positions.

The ACM also contains an energy-storage capacitor. When the ignition switch is in the Start or On positions, this capacitor is continually being charged with enough electrical energy to deploy the supplemental restraint components for up to one second following a battery disconnect or failure. The purpose of the capacitor is to provide backup supplemental restraint system protection in case there is a loss of battery current supply to the ACM during an impact.

Two sensors are contained within the ACM, an electronic impact sensor and a safing sensor. The ACM also monitors inputs from two remote front impact sensors located on the back of the right and left vertical members of the radiator support near the front of the vehicle. The electronic impact sensors are accelerometers that sense the rate of vehicle deceleration, which provides verification of the direction and severity of an impact. On vehicles equipped with optional side curtain airbags the ACM also monitors inputs from two additional remote impact sensors located on the left and right inner B-pillars to control deployment of the side curtain airbag units.

The safing sensor is an electronic accelerometer sensor within the ACM that provides an additional logic input to the ACM microprocessor. The safing sensor is used to verify the need for a supplemental restraint deployment by detecting impact energy of a lesser magnitude than that of the primary electronic impact sensors, and must exceed a safing threshold in order for the airbags to deploy. Vehicles equipped with optional side curtain airbags, feature a second safing sensor within the ACM to provide confirmation to the ACM microprocessor of side impact forces. This second safing sensor is a bi-directional unit that detects impact forces from either side of the vehicle.

Pre-programmed decision algorithms in the ACM microprocessor determine when the deceleration rate as signaled by the impact sensors and the safing sensors indicate an impact that is severe enough to require supplemental restraint system protection and, based upon the severity of the monitored impact, determines the level of front airbag deployment force required for each front seating position. When the programmed conditions are met, the ACM sends the proper electrical signals to deploy the dual multistage front airbags at the programmed force levels, the front seat belt tensioners and, if the vehicle is so equipped, either side curtain airbag unit. For vehicles equipped with the OCS, the passenger front airbag and seat belt tensioner will be deployed by the ACM only if enabled by the OCM (passenger airbag on/off indicator Off) at the time of the impact.

The hard wired inputs and outputs for the ACM may be diagnosed and tested using conventional diagnostic tools and procedures. However, conventional diagnostic methods will not prove conclusive in the diagnosis of the ACM, the PCI data bus network, or the electronic message inputs to and outputs from the ACM. The most reliable, efficient, and accurate means to diagnose the ACM, the PCI data bus, and the electronic message inputs to and outputs from the ACM requires the use of a diagnostic scan tool. Refer to the appropriate diagnostic information.

AIRBAG CONTROL MODULE (Continued)

REMOVAL

WARNING: To avoid personal injury or death, on vehicles equipped with airbags, disable the supplemental restraint system before attempting any steering wheel, steering column, airbag, occupant classification system, seat belt tensioner, impact sensor, or instrument panel component diagnosis or service. Disconnect and isolate the battery negative (ground) cable, then wait two minutes for the system capacitor to discharge before performing further diagnosis or service. This is the only sure way to disable the supplemental restraint system. Failure to take the proper precautions could result in accidental airbag deployment.

WARNING: To avoid personal injury or death, never strike or drop the airbag control module, as it can damage the impact sensor or affect its calibration. The airbag control module contains the impact sensor, which enables the system to deploy the supplemental restraints. If an airbag control module is accidentally dropped during service, the module must be scrapped and replaced with a new unit. Failure to observe this warning could result in accidental, incomplete, or improper supplemental restraint deployment.

CAUTION: On vehicles equipped with the Occupant Classification System (OCS), never replace both the Airbag Control Module (ACM) and the Occupant Classification Module (OCM) at the same time. If both require replacement, replace one. Then perform the supplemental restraint verification test before replacing the other. Both the ACM and the OCM store OCS calibration data, which they transfer to one another when one of them is replaced. If both are replaced at the same time, an irreversible fault will be set in both modules.

(1) Disconnect and isolate the battery negative cable. Wait two minutes for the system capacitor to discharge before further service.

(2) Remove the center console from the top of the floor panel transmission tunnel. (Refer to 23 - BODY/INTERIOR/FLOOR CONSOLE - REMOVAL).

CAUTION: Use care when disengaging the Airbag Control Module (ACM) cover latches from the ACM or the cover may be damaged.

(3) The ACM cover is secured to the ACM by a latch tab located on each side of the cover (Fig. 8). Gently pry both latch tabs away from the ACM far enough to disengage the latches from the slots in the base of the ACM housing, then lift the cover off of the ACM.

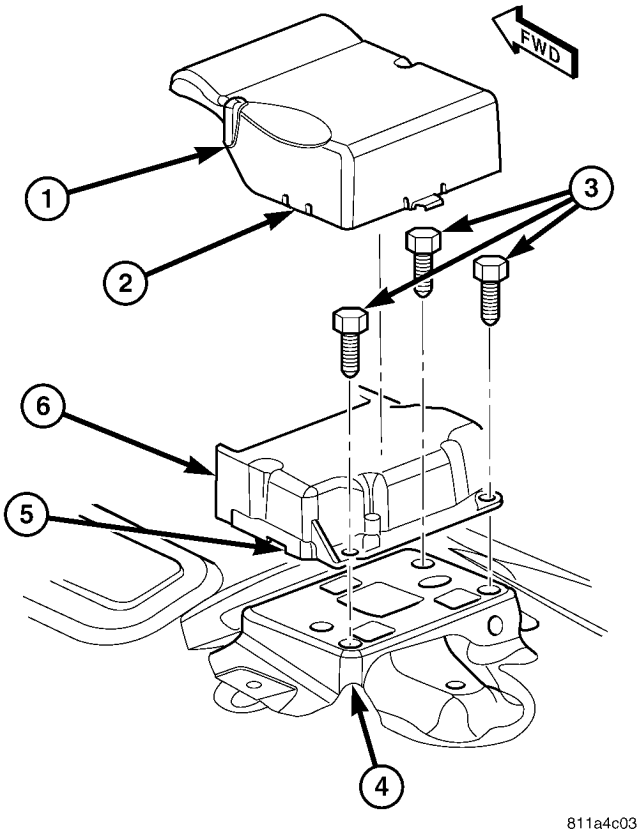

Fig. 8 Airbag Control Module Remove/Install

1 - COVER
2 - LATCH (2)
3 - SCREW (3)
4 - BRACKET
5 - SLOT (2)
6 - AIRBAG CONTROL MODULE

(4) Disconnect the two wire harness connectors (one each from the instrument panel and the body wire harnesses) for the ACM from the ACM connector receptacles located on the forward facing side of the module (Fig. 9). To disconnect the wire harness connectors from the ACM, depress the release tab and lift the lever arm on each connector.

(5) Remove the three screws that secure the ACM to the ACM bracket that is welded onto the top of the floor panel transmission tunnel.

(6) Remove the ACM from the floor panel transmission tunnel.

AIRBAG CONTROL MODULE (Continued)

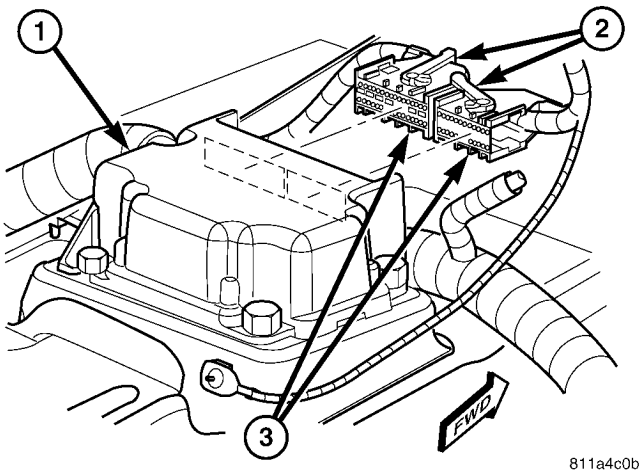

Fig. 9 Airbag Control Module Connectors

1 - AIRBAG CONTROL MODULE
2 - LEVER ARM (2)
3 - WIRE HARNESS CONNECTOR (2)

INSTALLATION

WARNING: To avoid personal injury or death, on vehicles equipped with airbags, disable the supplemental restraint system before attempting any steering wheel, steering column, airbag, occupant classification system, seat belt tensioner, impact sensor, or instrument panel component diagnosis or service. Disconnect and isolate the battery negative (ground) cable, then wait two minutes for the system capacitor to discharge before performing further diagnosis or service. This is the only sure way to disable the supplemental restraint system. Failure to take the proper precautions could result in accidental airbag deployment.

WARNING: To avoid personal injury or death, never strike or drop the airbag control module, as it can damage the impact sensor or affect its calibration. The airbag control module contains the impact sensor, which enables the system to deploy the supplemental restraints. If an airbag control module is accidentally dropped during service, the module must be scrapped and replaced with a new unit. Failure to observe this warning could result in accidental, incomplete, or improper supplemental restraint deployment.

CAUTION: On vehicles equipped with the Occupant Classification System (OCS), never replace both the Airbag Control Module (ACM) and the Occupant Classification Module (OCM) at the same time. If both require replacement, replace one. Then perform the supplemental restraint verification test before replacing the other. Both the ACM and the OCM store OCS calibration data, which they transfer to one another when one of them is replaced. If both are replaced at the same time, an irreversible fault will be set in both modules.

(1) Carefully position the Airbag Control Module (ACM) to the ACM bracket on the floor panel transmission tunnel (Fig. 8). When the ACM is correctly positioned, the arrow on the ACM label will be pointed forward in the vehicle and the locating pin on the bottom of the right ACM mounting flange will be engaged into the locating hole in the ACM bracket.

(2) Install and tighten the three screws that secure the ACM to the ACM bracket that is welded onto the floor panel transmission tunnel. Tighten the screws to 11 N·m (8 ft. lbs.).

CAUTION: The lever arms of the wire harness connectors for the ACM MUST be in the unlatched position before they are inserted into their connector receptacles on the ACM or they may become damaged.

(3) Reconnect the two wire harness connectors (one each from the instrument panel and the body wire harnesses) for the ACM to the ACM connector receptacles located on the forward facing side of the module (Fig. 9). Be certain that the latches on both connectors are each fully engaged.

(4) Carefully position the ACM cover back over the top of the ACM. Be certain both cover latches are engaged in the slots in the base of the ACM housing.

(5) Reinstall the center console onto the top of the floor panel transmission tunnel. (Refer to 23 - BODY/INTERIOR/FLOOR CONSOLE - INSTALLATION).

(6) Do not reconnect the battery negative cable at this time. The supplemental restraint system verification test procedure should be performed following service of any supplemental restraint system component. (Refer to 8 - ELECTRICAL/RESTRAINTS - STANDARD PROCEDURE - VERIFICATION TEST).

BELT TENSION SENSOR

DESCRIPTION

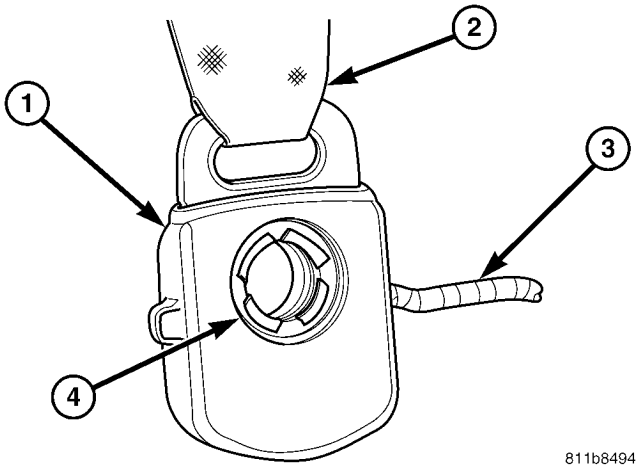

Fig. 10 Belt Tension Sensor

1 - BELT TENSION SENSOR
2 - SEAT BELT WEBBING
3 - PIGTAIL WIRE
4 - MOUNTING HOLE

Vehicles equipped with the Occupant Classification System (OCS) include a belt tension sensor. This sensor is integral to the passenger side front seat belt lower anchor which is secured to the outboard side of the passenger side front seat cushion frame. The lower anchor and belt tension sensor are concealed beneath an access cover on the outboard seat cushion side shield on the passenger side front seat. The belt tension sensor consists of a molded plastic housing with a central mounting hole, a metal seat belt anchor loop, and a short pigtail wire. The electronic circuitry of the belt tension sensor is concealed and protected within the molded plastic housing. The sensor is connected to the vehicle electrical system through its pigtail wire to a dedicated take out of the passenger side front seat wire harness with a keyed and latching molded plastic connector insulator to ensure a proper and secure connection.

The belt tension sensor cannot be repaired and, if faulty or damaged, the entire passenger side front seat belt and retractor unit must be replaced. (Refer to 8 - ELECTRICAL/RESTRAINTS/FRONT SEAT BELT & RETRACTOR - REMOVAL).

OPERATION

The belt tension sensor unit is designed to sense the relative cinch load applied to the passenger side front seat belt, which provides a logic input to the microprocessor of the Occupant Classification Module (OCM). When a load is applied to the seat belt, the changes in the load are measured by the belt tension sensor through the seat belt lower anchor. As the load changes, the circuitry of the belt tension sensor changes the output voltage of the sensor.

The belt tension sensor receives a nominal five volts and a ground through dedicated hard wired circuits from the OCM. The OCM then monitors the belt tension sensor output voltage on a dedicated hard wired data communication circuit. The hard wired circuits between the belt tension sensor and the OCM may be diagnosed and tested using conventional diagnostic tools and procedures. However, the most reliable, efficient, and accurate means to diagnose the belt tension sensor input to the OCM, and the electronic message communication between the OCM and the Airbag Control Module (ACM) requires the use of a diagnostic scan tool. Refer to the appropriate diagnostic information.

CHILD RESTRAINT ANCHOR

DESCRIPTION

This model is equipped with a Lower Anchors and Tether for CHildren, or LATCH child restraint anchorage system (Fig. 11). The LATCH system provides for the installation of suitable child restraints in certain seating positions without using the standard equipment seat belt provided for that seating position. The rear seats in this model are equipped with a fixed-position child restraint upper tether anchor for both the center and the two outboard seating positions, and child restraint lower anchors for the two outboard seating positions only.

The three upper tether anchors are integral to the rear seat back panels (Fig. 12). Two anchors are integral to the back of the right rear seat back panel, and one is integral to the left rear seat back panel. These anchors are each constructed from a short piece of heavy-gauge steel wire stock that is securely welded into a stamped cup integral to the seat back panel. There is a separate molded plastic trim bezel located around each of the three anchors. The child restraint upper tether anchors cannot be adjusted or repaired and, if faulty or damaged, they must be replaced as a unit with their respective rear seat back panels.

The lower anchors for this model are also integral to their respective rear seat back panels (Fig. 13). These anchors are also constructed from heavy-gauge steel wire stock that is formed into a U-shape, then securely welded to the lower edge of the seat back panel. They are each accessed from the front of their respective seats, at each side where the seat back meets the seat cushion. These lower anchors cannot be adjusted or repaired and, if faulty or damaged, they must be replaced as a unit with the seat back panel.

CHILD RESTRAINT ANCHOR (Continued)

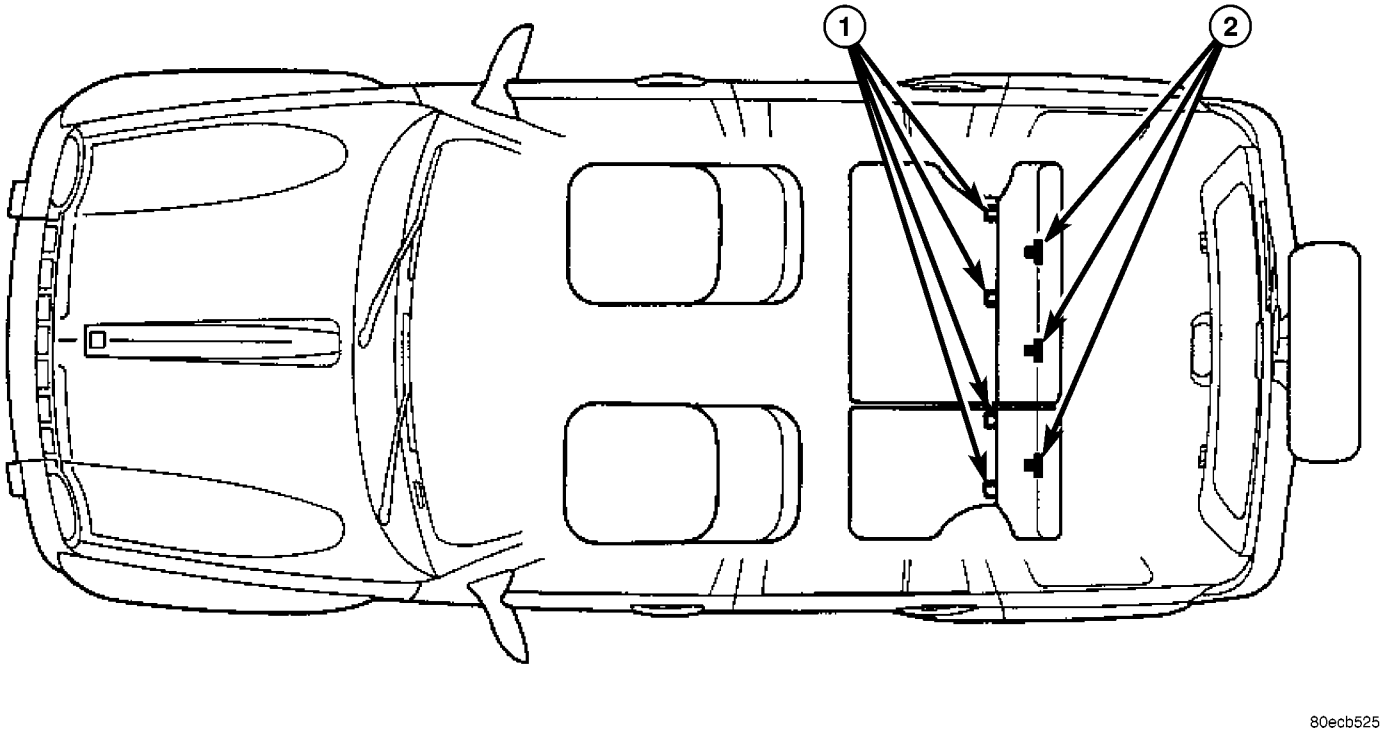

Fig. 11 Child Restraint Anchor Locations

1 - LOWER ANCHOR (PROVIDED FOR REAR OUTBOARD SEATING POSITIONS ONLY)
2 - TETHER ANCHOR (PROVIDED FOR REAR CENTER AND OUTBOARD SEATING POSITIONS)

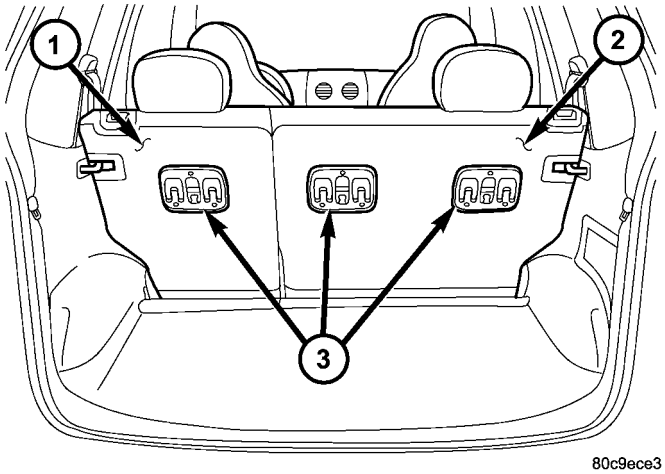

Fig. 12 Child Tether Anchors

1 - REAR SEAT BACK (LEFT)
2 - REAR SEAT BACK (RIGHT)
3 - CHILD TETHER ANCHOR BEZEL (3)

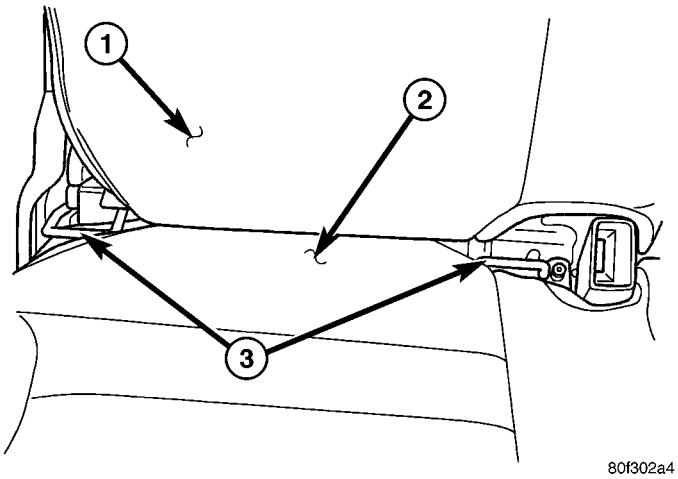

Fig. 13 Child Restraint Lower Anchors

1 - REAR SEAT BACK
2 - REAR SEAT CUSHION
3 - LOWER ANCHOR

CHILD RESTRAINT ANCHOR (Continued)

WARNING: To avoid personal injury or death, during and following any seat belt or child restraint anchor service, carefully inspect all seat belts, buckles, mounting hardware, retractors, tether straps, and anchors for proper installation, operation, or damage. Replace any belt that is cut, frayed, or torn. Straighten any belt that is twisted. Tighten any loose fasteners. Replace any belt that has a damaged or inoperative buckle or retractor. Replace any belt that has a bent or damaged latch plate or anchor plate. Replace any child restraint anchor or the unit to which the anchor is integral that has been bent or damaged. Never attempt to repair a seat belt or child restraint component. Always replace damaged or faulty seat belt and child restraint components with the correct, new and unused replacement parts listed in the DaimlerChrysler Mopar Parts Catalog.

OPERATION

See the owner's manual in the vehicle glove box for more information on the proper use of all of the factory-installed child restraint anchors.

CLOCKSPRING

DESCRIPTION

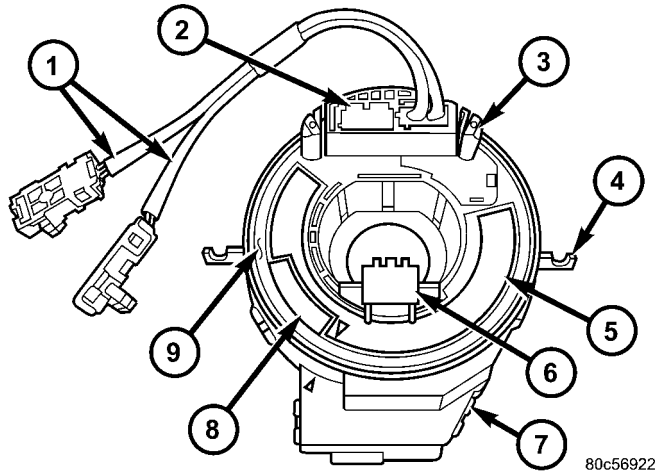

Fig. 14 Clockspring

1 - PIGTAIL WIRE (2)
2 - UPPER CONNECTOR RECEPTACLE
3 - BUMPER (2)
4 - BRACKET (2)
5 - LABEL
6 - SHIELD
7 - CASE
8 - WINDOW
9 - ROTOR

The clockspring assembly is secured with two integral plastic latches onto the upper steering column housing near the top of the steering column behind the steering wheel (Fig. 14). The clockspring consists of a flat, round molded plastic case with a stubby tail that hangs below the steering column (Fig. 15). The tail contains two connector receptacles that face toward the instrument panel. Within the plastic case is a spool-like molded plastic rotor with a large exposed hub and several plastic rollers. The upper surface of the rotor hub has a large center hole, a release button, a clear plastic inspection window, two short pigtail wires with connectors, and a connector receptacle that faces the steering wheel. A rubber bumper block is located on each side of the tower formation that contains the connector receptacle and pigtail wires on the upper surface of the rotor hub.

The lower surface of the rotor hub has a molded plastic turn signal cancel cam with a single lobe that is integral to the rotor. Within the plastic case and wound around the rotor spool is a long ribbon-like tape that consists of several thin copper wire leads sandwiched between two thin plastic membranes. The outer end of the tape terminates at the connector receptacles that face the instrument panel, while the inner end of the tape terminates at the pigtail wires and connector receptacle on the hub of the clockspring rotor that face the steering wheel.

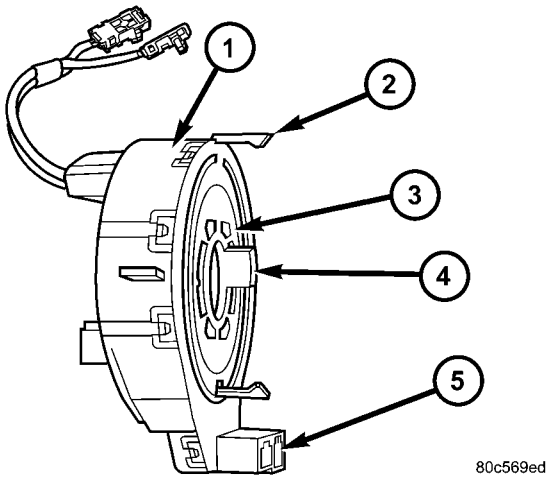

Fig. 15 Clockspring Latches

1 - CASE
2 - LATCH (2)
3 - ROTOR
4 - CANCEL CAM
5 - LOWER CONNECTOR RECEPTACLE (2)

Service replacement clocksprings are shipped precentered and with a molded plastic shield that snaps onto the rotor over the release button. The release button secures the centered clockspring rotor to the clockspring case and the shield prevents the release button from being inadvertently depressed during shipment and handling, but the shield must be removed from the clockspring after it is installed on

CLOCKSPRING (Continued)

the steering column. (Refer to 8 - ELECTRICAL/RESTRAINTS/CLOCKSPRING - STANDARD PROCEDURE - CLOCKSPRING CENTERING).

Two versions of the clockspring are used on this model, one is a seven circuit unit for vehicles not equipped with optional remote radio switches on the steering wheel and can be visually identified by the use of yellow heat-shrink tubing on the pigtail wires, while the other is a nine circuit unit for vehicles with remote radio switches and can be visually identified by the use of black heat-shrink tubing on the pigtail wires. The clockspring cannot be repaired. If the clockspring is faulty, damaged, or if the driver airbag has been deployed, the clockspring must be replaced.

OPERATION

The clockspring is a mechanical electrical circuit component that is used to provide continuous electrical continuity between the fixed instrument panel wire harness and the electrical components mounted on or in the rotating steering wheel. On this model the rotating electrical components include the driver airbag, the horn switch, the speed control switches, and the remote radio switches, if the vehicle is so equipped. The clockspring case is positioned and secured to the upper steering column housing near the top of the steering column. The connector receptacles on the tail of the fixed clockspring case connect the clockspring to the vehicle electrical system through two take outs with connectors from the instrument panel wire harness.

The clockspring rotor is movable and is keyed by the tower formation that is molded onto the upper surface of the rotor hub to an opening that is cast into the steering wheel armature. Rubber bumper blocks on either side of the clockspring tower formation eliminate contact noise between the clockspring tower and the steering wheel. The lobe of the turn signal cancel cam on the lower surface of the clockspring rotor hub contacts a turn signal cancel actuator of the multi-function switch to provide automatic turn signal cancellation.

The yellow or black-sleeved pigtail wires on the upper surface of the clockspring rotor connect the clockspring to the multistage driver airbag, while a steering wheel wire harness connects the connector receptacle on the upper surface of the clockspring rotor to the horn switch and, if the vehicle is so equipped, to the optional speed control switches and remote radio switches on the steering wheel.

Like the clockspring in a timepiece, the clockspring tape has travel limits and can be damaged by being wound too tightly during full stop-to-stop steering wheel rotation. To prevent this from occurring, the clockspring is centered when it is installed on the steering column. Centering the clockspring indexes the clockspring tape to the movable steering components so that the tape can operate within its designed travel limits. However, if the clockspring is removed from the steering column or if the steering shaft is disconnected from the steering gear, the clockspring spool can change position relative to the movable steering components. The clockspring must be re-centered following completion of this service or the tape may be damaged.

Service replacement clocksprings are shipped pre-centered and with a plastic shield installed over the clockspring release button. This shield should not be removed and the release button should not be depressed until the clockspring has been installed on the steering column. If the release button is depressed before the clockspring is installed on a steering column, the clockspring centering procedure must be performed. (Refer to 8 - ELECTRICAL/RESTRAINTS/CLOCKSPRING - STANDARD PROCEDURE - CLOCKSPRING CENTERING).

STANDARD PROCEDURE - CLOCKSPRING CENTERING

WARNING: To avoid personal injury or death, on vehicles equipped with airbags, disable the supplemental restraint system before attempting any steering wheel, steering column, airbag, occupant classification system, seat belt tensioner, impact sensor, or instrument panel component diagnosis or service. Disconnect and isolate the battery negative (ground) cable, then wait two minutes for the system capacitor to discharge before performing further diagnosis or service. This is the only sure way to disable the supplemental restraint system. Failure to take the proper precautions could result in accidental airbag deployment.

NOTE: Before starting this procedure, be certain to turn the steering wheel until the front wheels are in the straight-ahead position.

(1) Place the front wheels in the straight-ahead position.

(2) Remove the clockspring from the steering column. (Refer to 8 - ELECTRICAL/RESTRAINTS/CLOCKSPRING - REMOVAL).

(3) Depress the release button (Fig. 16).

(4) Keeping the release button depressed, rotate the clockspring rotor clockwise to the end of its travel. **Do not apply excessive torque.**

(5) From the end of the clockwise travel, rotate the rotor about two and one-half turns counterclockwise, then release the release button. The clockspring tower formation with the pigtail wires for the driver airbag and the connector receptacle for the steering

CLOCKSPRING (Continued)

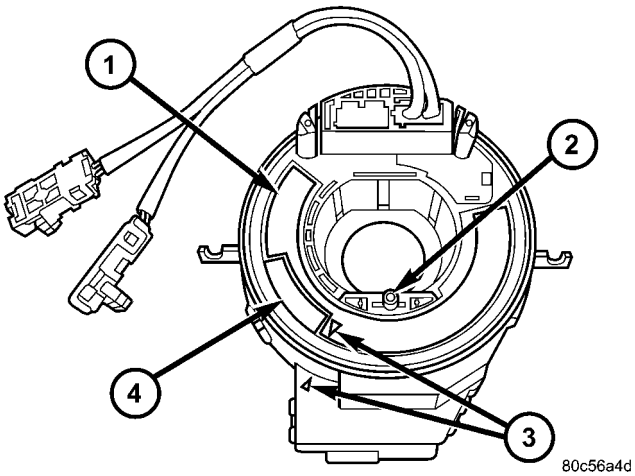

Fig. 16 Clockspring Centering

1 - ROTOR LABEL
2 - RELEASE BUTTON
3 - ALIGNMENT ARROWS
4 - INSPECTION WINDOW

wheel wire harness should end up at the top, the blue roller should be visible through the inspection window, and the printed arrow on the label of the clockspring rotor should be aligned with the arrow molded into the clockspring case.

(6) The clockspring is now centered. Do not depress the release button again until the clockspring is reinstalled on the steering column.

(7) The front wheels should still be in the straight-ahead position. Reinstall the clockspring onto the steering column. (Refer to 8 - ELECTRICAL/RESTRAINTS/CLOCKSPRING - INSTALLATION).

REMOVAL

WARNING: To avoid personal injury or death, on vehicles equipped with airbags, disable the supplemental restraint system before attempting any steering wheel, steering column, airbag, occupant classification system, seat belt tensioner, impact sensor, or instrument panel component diagnosis or service. Disconnect and isolate the battery negative (ground) cable, then wait two minutes for the system capacitor to discharge before performing further diagnosis or service. This is the only sure way to disable the supplemental restraint system. Failure to take the proper precautions could result in accidental airbag deployment.

NOTE: Before starting this procedure, be certain to turn the steering wheel until the front wheels are in the straight-ahead position.

(1) Place the front wheels in the straight ahead position.

(2) Disconnect and isolate the battery negative cable.

(3) Remove the driver airbag from the steering wheel. (Refer to 8 - ELECTRICAL/RESTRAINTS/DRIVER AIRBAG - REMOVAL).

(4) Disconnect the steering wheel wire harness connector from the upper clockspring connector receptacle.

(5) Remove the steering wheel from the steering column. (Refer to 19 - STEERING/COLUMN/STEERING WHEEL - REMOVAL).

(6) If the vehicle is equipped with the optional tilt steering column, move the column to the fully lowered position and leave the tilt release lever in the released (down) position.

(7) From below the steering column, remove the two screws that secure the lower shroud to the upper shroud (Fig. 17).

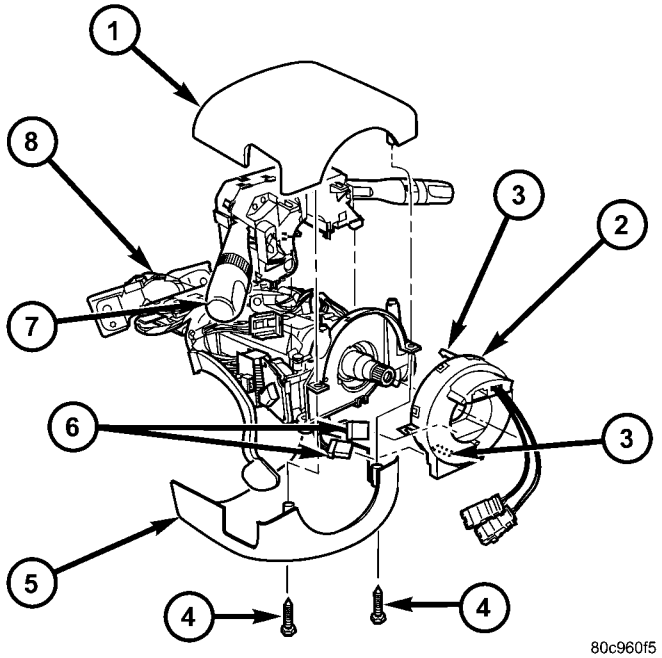

Fig. 17 Clockspring Remove/Install

1 - UPPER SHROUD
2 - CLOCKSPRING
3 - LATCH (2)
4 - SCREW (2)
5 - LOWER SHROUD
6 - WIRE HARNESS CONNECTOR (2)
7 - MULTI-FUNCTION SWITCH
8 - STEERING COLUMN

(8) Using hand pressure, push gently inward on both sides of the upper shroud above the parting line between the upper and lower shrouds to release the snap features that secure the two shroud halves to each other.

(9) Remove both the upper and lower shrouds from the steering column.

CLOCKSPRING (Continued)

(10) Disconnect the two instrument panel wire harness connectors for the clockspring from the two connector receptacles located below the steering column on the back of the clockspring housing.

(11) Using a small thin-bladed screwdriver, release the two integral plastic latches that secure the back of the clockspring housing to the steering column lock housing.

(12) Remove the clockspring from the steering column lock housing. The clockspring cannot be repaired. It must be replaced if faulty or damaged, or if the driver airbag has been deployed.

(13) If the removed clockspring is to be reused, be certain that the release button on the clockspring rotor is raised and latched to secure the rotor to the clockspring case to maintain clockspring centering until it is reinstalled on the steering column. If clockspring centering is not maintained, the clockspring must be centered again before it is reinstalled. (Refer to 8 - ELECTRICAL/RESTRAINTS/CLOCKSPRING - STANDARD PROCEDURE - CLOCKSPRING CENTERING).

INSTALLATION

WARNING: To avoid personal injury or death, on vehicles equipped with airbags, disable the supplemental restraint system before attempting any steering wheel, steering column, airbag, occupant classification system, seat belt tensioner, impact sensor, or instrument panel component diagnosis or service. Disconnect and isolate the battery negative (ground) cable, then wait two minutes for the system capacitor to discharge before performing further diagnosis or service. This is the only sure way to disable the supplemental restraint system. Failure to take the proper precautions could result in accidental airbag deployment.

CAUTION: If the clockspring is not properly centered in relation to the steering wheel, steering shaft and steering gear, it may be damaged. (Refer to 8 - ELECTRICAL/RESTRAINTS/CLOCKSPRING - STANDARD PROCEDURE - CLOCKSPRING CENTERING). Service replacement clocksprings are shipped pre-centered, with the release button engaged (raised) and a molded plastic shield installed over the release button. This release button should not be disengaged and the shield should not be removed until the clockspring has been installed on the steering column. If the release button is disengaged before the clockspring is installed on a steering column, the clockspring centering procedure must be performed.

NOTE: Before starting this procedure, be certain that the front wheels are in the straight-ahead position.

(1) Carefully slide the centered clockspring down over the steering column upper shaft until the two integral plastic latches on the back of the clockspring housing are fully engaged through their openings in the steering column lock housing (Fig. 17).

(2) Reconnect the two instrument panel wire harness connectors to the two connector receptacles located below the steering column on the back of the clockspring housing.

(3) Position the upper and lower shrouds onto the steering column.

(4) Align the snap features on the lower shroud with the receptacles in the upper shroud and apply hand pressure to snap them together.

(5) From below the steering column, install and tighten the two screws that secure the lower shroud to the upper shroud. Tighten the screws to 2 N·m (18 in. lbs.).

(6) If the vehicle is equipped with the optional tilt steering column, move the column back to the fully raised position and move the tilt release lever back to the locked (up) position.

(7) If a new clockspring has been installed, remove the plastic shield covering the release button that secures the clockspring rotor to the clockspring case to maintain clockspring centering.

(8) Reinstall the steering wheel onto the steering column. (Refer to 19 - STEERING/COLUMN/STEERING WHEEL - INSTALLATION).

NOTE: Be certain that the steering wheel mounting screw is tightened to the proper torque specification to ensure proper clockspring operation.

(9) Reconnect the steering wheel wire harness connector to the upper clockspring connector receptacle.

(10) Reinstall the driver airbag onto the steering wheel. (Refer to 8 - ELECTRICAL/RESTRAINTS/DRIVER AIRBAG - INSTALLATION).

(11) Reconnect the battery negative cable.

CURTAIN AIRBAG

DESCRIPTION

8098029e

Fig. 18 SRS Logo

Optional side curtain airbags are available for this model when it is also equipped with dual front airbags. These airbags are passive, inflatable, Supplemental Restraint System (SRS) components, and vehicles with this equipment can be readily identified by a molded identification trim button with the “SRS - AIRBAG” logo located on the headliner above each B-pillar (Fig. 18). This system is designed to reduce injuries to the vehicle occupants in the event of a side impact collision.

Vehicles equipped with side curtain airbags have two individually controlled curtain airbag units. These airbag units are concealed and mounted above the headliner where they are each secured to one of the roof side rails (Fig. 19). Each folded airbag cushion is contained within a long extruded plastic channel that extends along the roof rail from the A-pillar at the front of the vehicle to just behind the C-pillar at the rear of the vehicle. The channel is secured with plastic push-in fasteners to the roof rail.

A tether extends down the A-pillar from the front of the airbag cushion, where it is retained to the pillar with a plastic push-in routing clip and is secured to the base of the A-pillar near the belt line with a screw. The hybrid-type inflator for each airbag is secured to the roof rail at the rear of the airbag unit between the C-pillar and the D-pillar, and is connected to the airbag cushion by a long tubular manifold. The bracket holding the inflator and three other brackets holding the manifold are secured to the roof rail with screws.

A two-wire pigtail harness is routed forward from the airbag inflator through a trough along the top of the plastic airbag channel on the roof rail and down the B-pillar, where it is retained by three routing clips. The pigtail harness is connected to a take out and connector of the body wire harness on the B-pillar, which connects the airbag unit to the Airbag Control Module (ACM).

The side curtain airbag unit cannot be adjusted or repaired and must be replaced if deployed, faulty, or in any way damaged. Once a side curtain airbag has been deployed, the complete airbag unit, the headliner, the upper A, B, and C-pillar trim, and all other visibly damaged components must be replaced.

OPERATION

Each side curtain airbag is deployed individually by an electrical signal generated by the Airbag Control Module (ACM) to which it is connected through left or right curtain airbag line 1 and line 2 (or squib) circuits. The hybrid-type inflator assembly for each airbag contains a small canister of highly compressed inert gas. When the ACM sends the proper electrical signal to the airbag inflator, the electrical energy creates enough heat to ignite chemical pellets within the inflator.

Once ignited, these chemicals burn rapidly and produce the pressure necessary to rupture a containment disk in the inert gas canister. The inflator and inert gas canister are sealed and connected to a tubular manifold so that all of the released gas is directed into the folded curtain airbag cushion, causing the cushion to inflate. As the airbag cushion inflates it will drop down from the roof rail between the edge of the headliner and the side glass/body pillars to form a curtain-like cushion to protect the vehicle occupants during a side impact collision.

The front tether keeps the front portion of the bag taut to the side of the vehicle, thus ensuring that the bag will deploy in the proper position. Following the airbag deployment, the airbag cushion quickly deflates by venting the inert gas through the loose weave of the cushion fabric, and the deflated cushion hangs down loosely from the roof rail.

REMOVAL

The following procedure is for replacement of a faulty or damaged side curtain airbag. If the airbag is faulty or damaged, but not deployed, review the recommended procedures for handling non-deployed supplemental restraints. (Refer to 8 - ELECTRICAL/ RESTRAINTS - STANDARD PROCEDURE - HANDLING NON-DEPLOYED SUPPLEMENTAL RESTRAINTS). If the side curtain airbag has been deployed, review the recommended procedures for service after a supplemental restraint deployment before removing the airbag from the vehicle. (Refer to 8 - ELECTRICAL/RESTRAINTS - STANDARD PROCEDURE - SERVICE AFTER A SUPPLEMENTAL RESTRAINT DEPLOYMENT).

CURTAIN AIRBAG (Continued)

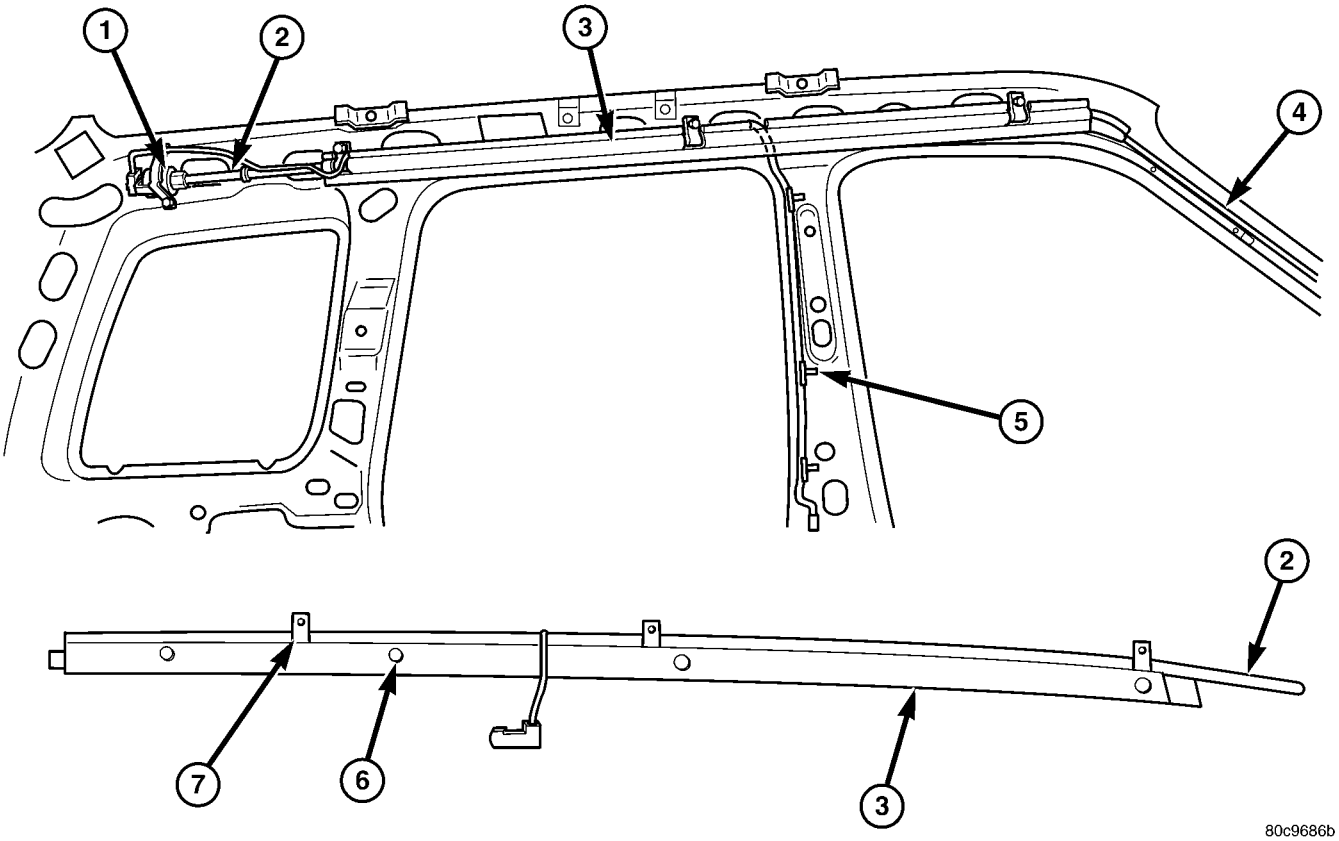

Fig. 19 Side Curtain Airbag

1 - INFLATOR
2 - MANIFOLD
3 - CHANNEL
4 - TETHER
5 - PIGTAIL WIRE RETAINER (3)
6 - PUSH-IN FASTENER (4)
7 - BRACKET (3)

WARNING: To avoid personal injury or death, on vehicles equipped with airbags, disable the supplemental restraint system before attempting any steering wheel, steering column, airbag, occupant classification system, seat belt tensioner, impact sensor, or instrument panel component diagnosis or service. Disconnect and isolate the battery negative (ground) cable, then wait two minutes for the system capacitor to discharge before performing further diagnosis or service. This is the only sure way to disable the supplemental restraint system. Failure to take the proper precautions could result in accidental airbag deployment.

WARNING: To avoid personal injury or death, when removing a deployed airbag, rubber gloves, eye protection, and a long-sleeved shirt should be worn. There may be deposits on the airbag unit and other interior surfaces. In large doses, these deposits may cause irritation to the skin and eyes.

WARNING: To avoid personal injury or death, use extreme care to prevent any foreign material from entering the side curtain airbag, or becoming entrapped between the side curtain airbag cushion and the headliner. Failure to observe this warning could result in occupant injuries upon airbag deployment.

(1) Disconnect and isolate the battery negative cable. Wait two minutes for the system capacitor to discharge before further service.

(2) Remove the lower trim from the inside of the B-pillar. (Refer to 23 - BODY/INTERIOR/B-PILLAR LOWER TRIM - REMOVAL).

(3) Remove the headliner from the vehicle. (Refer to 23 - BODY/INTERIOR/HEADLINER - REMOVAL).

(4) Remove the screw that secures the side curtain airbag tether retainer to the base of the A-pillar near the belt line (Fig. 20).

(5) Disengage the side curtain airbag tether plastic retainer clip from the A-pillar.

(6) Disconnect the side curtain airbag pigtail wire connector from the body wire harness connector near the base of the B-pillar (Fig. 21).

CURTAIN AIRBAG (Continued)

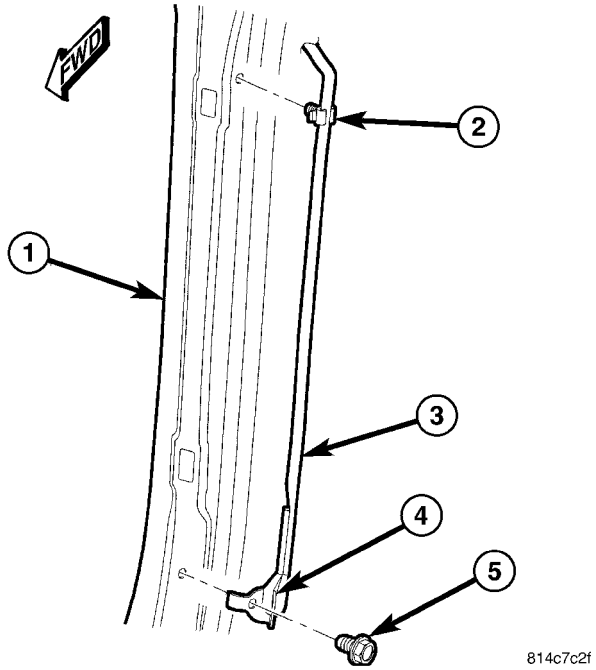

Fig. 20 Side Curtain Airbag Tether Remove/Install

1 - A-PILLAR
2 - CLIP (1)
3 - TETHER
4 - RETAINER (1)
5 - SCREW (1)

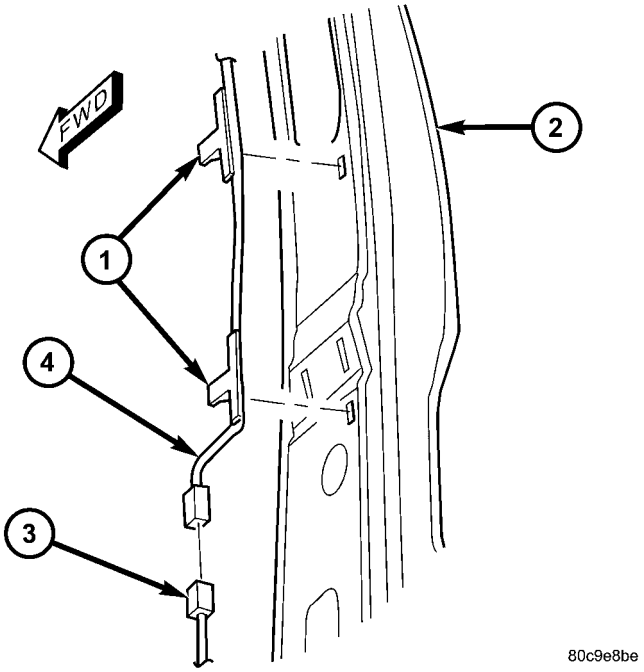

Fig. 21 Side Curtain Airbag Pigtail Wire Remove/ Install

1 - RETAINER (3)
2 - B-PILLAR
3 - WIRE HARNESS CONNECTOR
4 - PIGTAIL WIRE

(7) Disengage the three side curtain airbag pigtail wire retainer clips from the B-pillar.

(8) Remove the three screws that secure the side curtain airbag manifold tube brackets to the U-nuts in the roof rail (Fig. 22) and (Fig. 23).

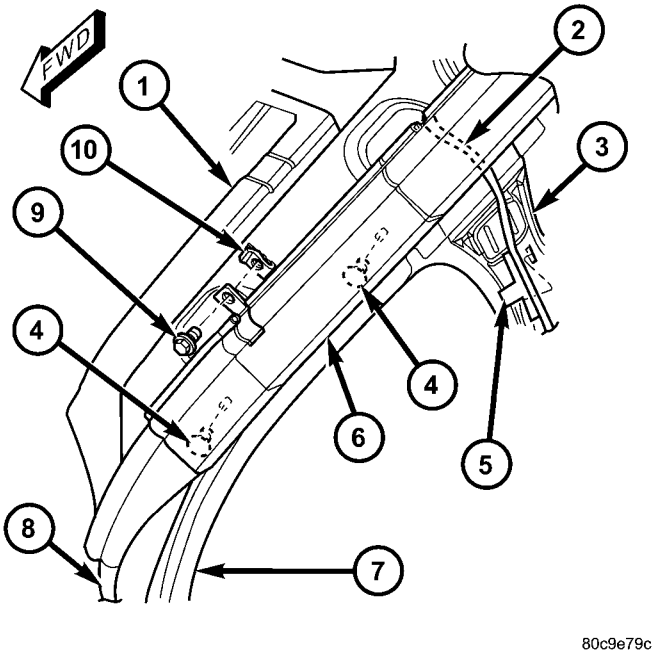

Fig. 22 Side Curtain Airbag (Front) Remove/Install

1 - ROOF PANEL
2 - PIGTAIL WIRE
3 - B-PILLAR
4 - PUSH-IN FASTENER (4)
5 - RETAINER
6 - CHANNEL
7 - A-PILLAR
8 - TETHER
9 - SCREW (3)
10 - U-NUT (5)

(9) Remove the two screws that secure the side curtain airbag inflator bracket to the U-nuts in the roof rail (Fig. 24).

(10) Grasp the extruded plastic side curtain airbag channel firmly and pull it straight away from the roof rail far enough to disengage all four plastic push-in fasteners that secure it.

(11) Remove the side curtain airbag from the vehicle as a unit.

CURTAIN AIRBAG (Continued)

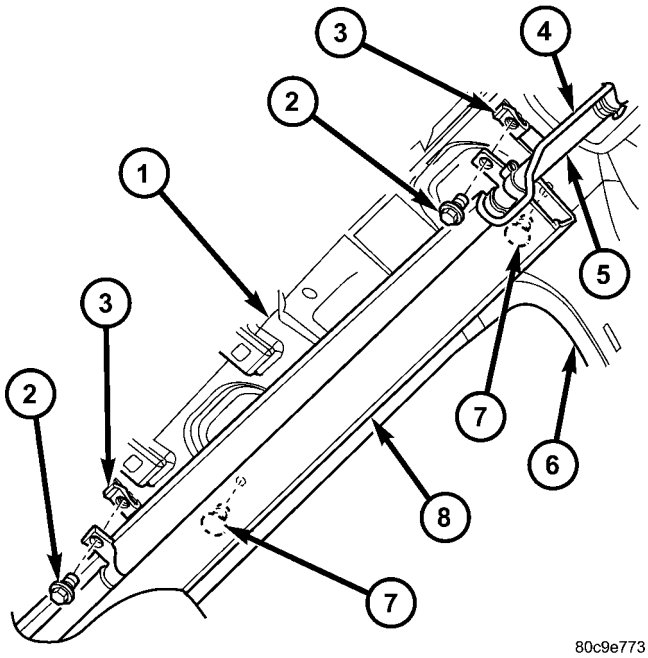

Fig. 23 Side Curtain Airbag (Rear) Remove/Install

1 - ROOF PANEL
2 - SCREW (3)
3 - U-NUT (5)
4 - PIGTAIL WIRE
5 - MANIFOLD
6 - C-PILLAR
7 - PUSH-IN FASTENER (4)
8 - CHANNEL

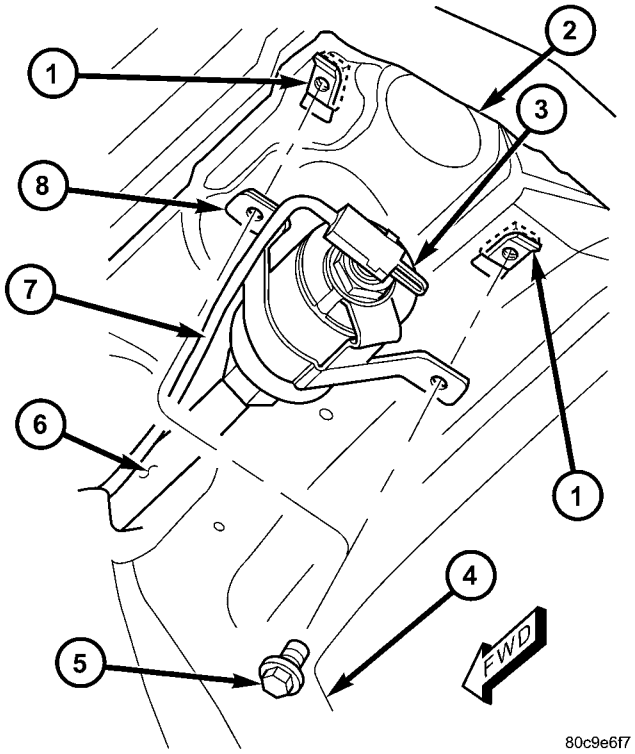

Fig. 24 Side Curtain Airbag Inflator Remove/Install

1 - U-NUT (5)
2 - ROOF PANEL
3 - INFLATOR
4 - C-PILLAR
5 - SCREW (2)
6 - MANIFOLD
7 - PIGTAIL WIRE
8 - BRACKET

INSTALLATION

The following procedure is for replacement of a faulty or damaged side curtain airbag. If the airbag is faulty or damaged, but not deployed, review the recommended procedures for handling non-deployed supplemental restraints. (Refer to 8 - ELECTRICAL/ RESTRAINTS - STANDARD PROCEDURE - HANDLING NON-DEPLOYED SUPPLEMENTAL RESTRAINTS). If the side curtain airbag has been deployed, review the recommended procedures for service after a supplemental restraint deployment before removing the airbag from the vehicle. (Refer to 8 - ELECTRICAL/RESTRAINTS - STANDARD PROCEDURE - SERVICE AFTER A SUPPLEMENTAL RESTRAINT DEPLOYMENT).

WARNING: To avoid personal injury or death, on vehicles equipped with airbags, disable the supplemental restraint system before attempting any steering wheel, steering column, airbag, occupant classification system, seat belt tensioner, impact sensor, or instrument panel component diagnosis or service. Disconnect and isolate the battery negative (ground) cable, then wait two minutes for the system capacitor to discharge before performing further diagnosis or service. This is the only sure way to disable the supplemental restraint system. Failure to take the proper precautions could result in accidental airbag deployment.

WARNING: To avoid personal injury or death, when removing a deployed airbag, rubber gloves, eye protection, and a long-sleeved shirt should be worn. There may be deposits on the airbag unit and other interior surfaces. In large doses, these deposits may cause irritation to the skin and eyes.

WARNING: To avoid personal injury or death, use extreme care to prevent any foreign material from entering the side curtain airbag, or becoming entrapped between the side curtain airbag cushion and the headliner. Failure to observe this warning could result in occupant injuries upon airbag deployment.

(1) Position the side curtain airbag into the vehicle as a unit.

(2) Align all four plastic push-in fasteners that secure the extruded plastic side curtain airbag chan-

CURTAIN AIRBAG (Continued)

nel with their holes in the roof side rail and push them straight into the roof rail until they are fully seated (Fig. 22) and (Fig. 23).

(3) Install and tighten the upper screw that secures the side curtain airbag inflator bracket to the U-nut in the roof rail, followed by the lower screw (Fig. 24). Tighten the screws to 12 N·m (105 in. lbs.).

(4) Working from the rear of the vehicle to the front, install and tighten each of the three screws that secure the side curtain airbag manifold tube brackets to the U-nuts in the roof rail. Tighten the screws to 12 N·m (105 in. lbs.).

(5) Route the side curtain airbag pigtail wire through the trough along the top of the extruded plastic airbag channel on the roof side rail, then between the channel and the body down the B-pillar.

NOTE: Be certain that the side curtain airbag pigtail wire is routed behind the airbag channel, between the channel and the body above the B-pillar.

(6) Engage the three side curtain airbag pigtail wire retainer clips into the B-pillar (Fig. 21).

(7) Reconnect the side curtain airbag pigtail wire connector to the body wire harness connector near the base of the B-pillar.

(8) Engage the side curtain airbag tether plastic retainer clip into the A-pillar (Fig. 20).

(9) Install and tighten the screw that secures the side curtain airbag tether retainer to the base of the A-pillar near the belt line. Tighten the screw to 14 N·m (120 in. lbs.).

(10) Reinstall the headliner into the vehicle. (Refer to 23 - BODY/INTERIOR/HEADLINER - INSTALLATION).

(11) Reinstall the lower trim onto the inside of the B-pillar. (Refer to 23 - BODY/INTERIOR/B-PILLAR LOWER TRIM - INSTALLATION).

(12) Do not reconnect the battery negative cable at this time. The supplemental restraint system verification test procedure should be performed following service of any supplemental restraint system component. (Refer to 8 - ELECTRICAL/RESTRAINTS - STANDARD PROCEDURE - VERIFICATION TEST).

DRIVER AIRBAG

DESCRIPTION

The black, injection molded, thermoplastic driver airbag protective trim cover is the most visible part of the driver airbag (Fig. 25). The driver airbag is located in the center of the steering wheel, where it is secured with two screws to the two horizontal spokes of the four-spoke steering wheel armature. All models have a bright silver Jeep® logo applied to the center of the trim cover. Concealed beneath the

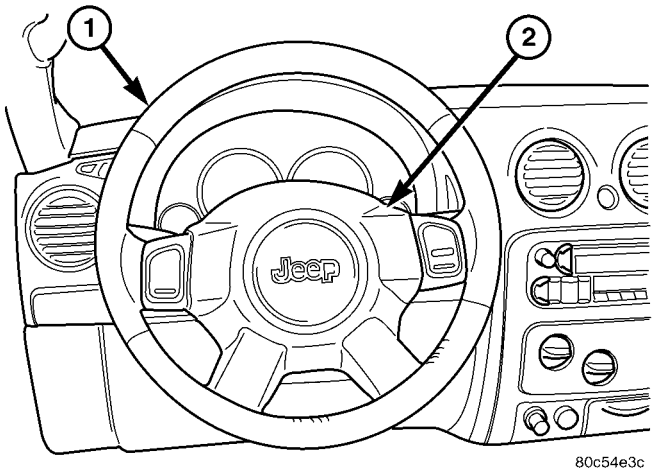

Fig. 25 Driver Airbag Trim Cover

1 - STEERING WHEEL
2 - TRIM COVER

driver airbag trim cover are the horn switch, the folded airbag cushion, the airbag cushion retainer, the airbag housing, the airbag inflator, and the retainers that secure the inflator to the airbag housing. The airbag cushion, housing, and inflator are secured within an integral receptacle molded into the back of the trim cover.

The resistive membrane-type horn switch is secured with heat stakes to the inside surface of the driver airbag trim cover, between the trim cover and the folded airbag cushion. The horn switch ground pigtail wire has a female spade terminal connector that receives a path to ground through a male spade terminal that is integral to the driver airbag housing stamping and is located near the upper right corner on the back of the housing (Fig. 26). The horn switch feed pigtail wire has a white, molded plastic insulator that is secured by an integral retainer to a mounting hole located near the lower left corner on the back of the housing, and is connected to the vehicle electrical system through a take out and connector of the steering wheel wire harness.

The airbag used in this model is a multistage unit that complies with revised federal airbag standards to deploy with less force than those used in some prior models. A 71 centimeter (28.0 inch) diameter, radial deploying fabric cushion with internal tethers is used. The airbag inflator is a dual-initiator, non-azide, pyrotechnic-type unit with four mounting studs and is secured to the stamped metal airbag housing using four hex nuts with washers. Two keyed and color-coded connector receptacles on the driver airbag inflator connect the two inflator initiators to the vehicle electrical system through two yellow or black-jacketed, two-wire pigtail harnesses of the clockspring.

DRIVER AIRBAG (Continued)

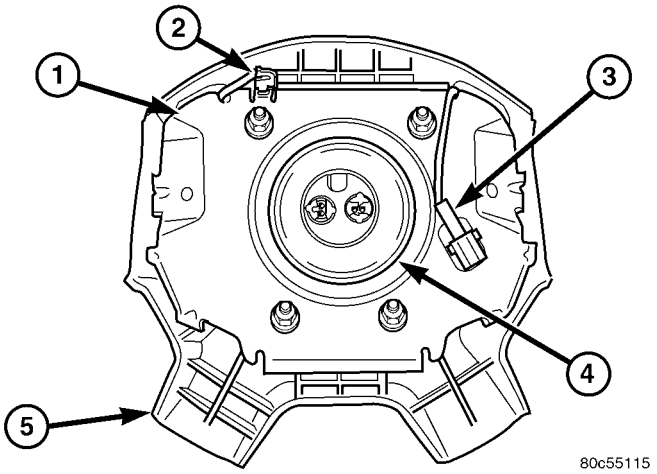

Fig. 26 Driver Airbag Housing

1 - HOUSING
2 - HORN SWITCH GROUND WIRE
3 - HORN SWITCH FEED WIRE
4 - INFLATOR
5 - TRIM COVER

The driver airbag unit cannot be repaired, and must be replaced if deployed or in any way damaged.

OPERATION

The multistage driver airbag is deployed by electrical signals generated by the Airbag Control Module (ACM) through the driver airbag squib 1 and squib 2 circuits to the two initiators in the airbag inflator. By using two initiators, the airbag can be deployed at multiple levels of force. The force level is controlled by the ACM to suit the monitored impact conditions by providing one of three delay intervals between the electrical signals provided to the two initiators. The longer the delay between these signals, the less forcefully the airbag will deploy.

When the ACM sends the proper electrical signals to each initiator, the electrical energy generates enough heat to initiate a small pyrotechnic charge which, in turn ignites chemical pellets within the inflator. Once ignited, these chemical pellets burn rapidly and produce a large quantity of inert gas. The inflator is sealed to the back of the airbag housing and a diffuser in the inflator directs all of the inert gas into the airbag cushion, causing the cushion to inflate. As the cushion inflates, the driver airbag trim cover will split at predetermined breakout lines, then fold back out of the way along with the horn switch unit. Following an airbag deployment, the airbag cushion quickly deflates by venting the inert gas towards the instrument panel through vent holes within the fabric used to construct the back (steering wheel side) panel of the airbag cushion.

Some of the chemicals used to create the inert gas may be considered hazardous while in their solid state before they are burned, but they are securely sealed within the airbag inflator. Typically, both initiators are used and all potentially hazardous chemicals are burned during an airbag deployment event. However, it is possible for only one initiator to be used during a deployment due to an airbag system fault; therefore, it is necessary to always confirm that both initiators have been used in order to avoid the improper disposal of potentially live pyrotechnic or hazardous materials. (Refer to 8 - ELECTRICAL/ RESTRAINTS - STANDARD PROCEDURE - SERVICE AFTER A SUPPLEMENTAL RESTRAINT DEPLOYMENT).

The inert gas that is produced when the chemicals are burned is harmless. However, a small amount of residue from the burned chemicals may cause some temporary discomfort if it contacts the skin, eyes, or breathing passages. If skin or eye irritation is noted, rinse the affected area with plenty of cool, clean water. If breathing passages are irritated, move to another area where there is plenty of clean, fresh air to breath. If the irritation is not alleviated by these actions, contact a physician.

REMOVAL

WARNING: To avoid personal injury or death, on vehicles equipped with airbags, disable the supplemental restraint system before attempting any steering wheel, steering column, airbag, occupant classification system, seat belt tensioner, impact sensor, or instrument panel component diagnosis or service. Disconnect and isolate the battery negative (ground) cable, then wait two minutes for the system capacitor to discharge before performing further diagnosis or service. This is the only sure way to disable the supplemental restraint system. Failure to take the proper precautions could result in accidental airbag deployment.

WARNING: To avoid personal injury or death, when removing a deployed airbag, rubber gloves, eye protection, and a long-sleeved shirt should be worn. There may be deposits on the airbag cushion and other interior surfaces. In large doses, these deposits may cause irritation to the skin and eyes.

DRIVER AIRBAG (Continued)

NOTE: The following procedure is for replacement of a faulty or damaged driver airbag. If the airbag is faulty or damaged, but not deployed, review the recommended procedures for handling non-deployed supplemental restraints. (Refer to 8 - ELECTRICAL/RESTRAINTS - STANDARD PROCEDURE - HANDLING NON-DEPLOYED SUPPLEMENTAL RESTRAINTS). If the driver airbag has been deployed, review the recommended procedures for service after a supplemental restraint deployment before removing the airbag from the vehicle. (Refer to 8 - ELECTRICAL/RESTRAINTS - STANDARD PROCEDURE - SERVICE AFTER A SUPPLEMENTAL RESTRAINT DEPLOYMENT).

(1) Disconnect and isolate the battery negative cable. Wait two minutes for the system capacitor to discharge before further service.

(2) From the underside of the steering wheel, remove the two screws that secure the driver airbag to the steering wheel armature (Fig. 27).

(3) Pull the driver airbag away from the steering wheel far enough to access the three electrical connections on the back of the airbag housing.

(4) Disconnect the steering wheel wire harness connector for the horn switch from the horn switch feed pigtail wire connector, which is located on the back of the driver airbag housing.

CAUTION: Do not pull on the clockspring pigtail wires or pry on the connector insulator to disengage the connector from the driver airbag inflator connector receptacle. Improper removal of these pigtail wires and their connector insulators can result in damage to the airbag circuits or connector insulators.

(5) The clockspring driver airbag pigtail wire connectors are secured by integral latches to the airbag inflator connector receptacles, which are located on the back of the driver airbag housing. Depress the latches on each side of each connector insulator and

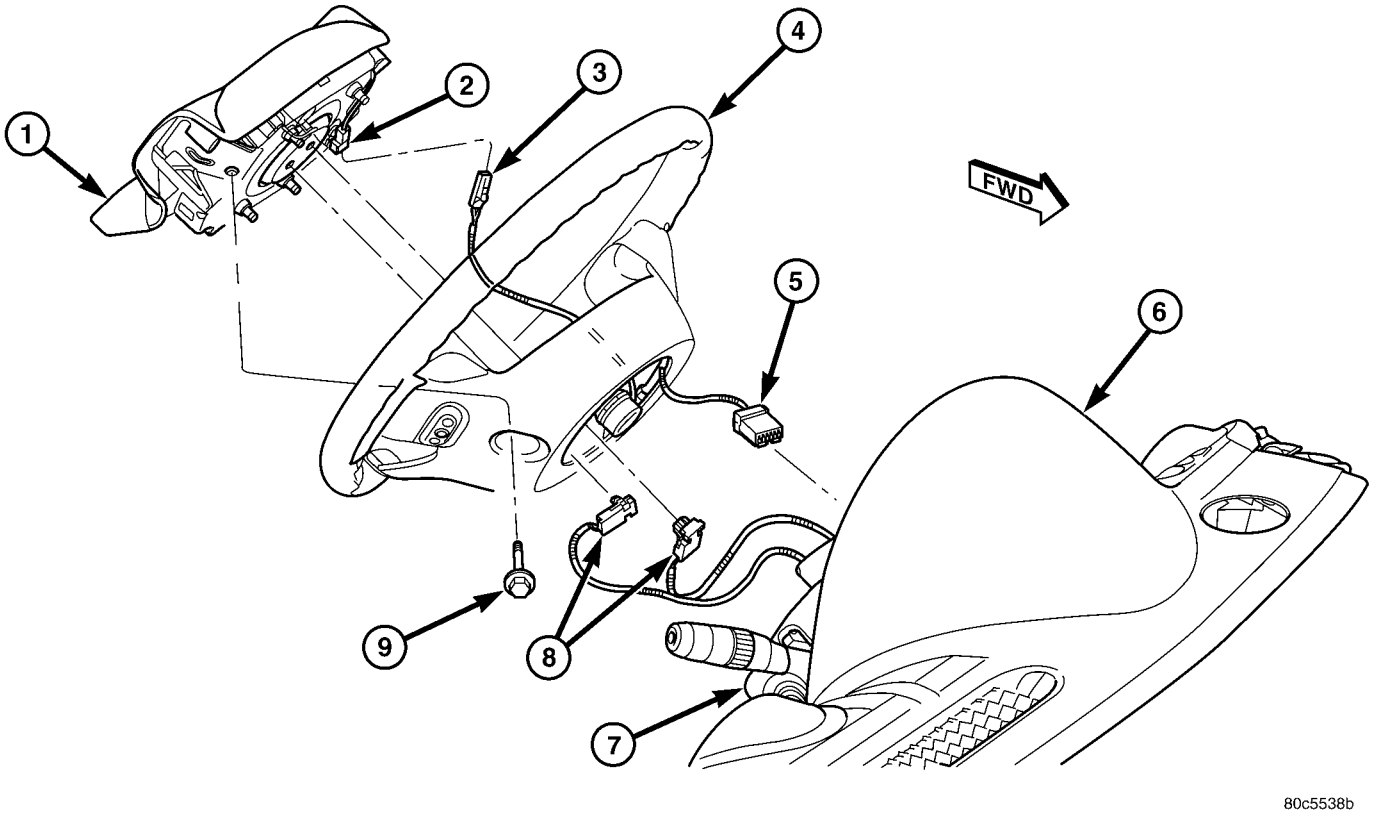

Fig. 27 Driver Airbag Remove/Install

1 - DRIVER AIRBAG
2 - HORN SWITCH FEED WIRE CONNECTOR
3 - WIRE HARNESS CONNECTOR
4 - STEERING WHEEL
5 - TO CLOCKSPRING
6 - INSTRUMENT PANEL
7 - STEERING COLUMN
8 - CLOCKSPRING PIGTAIL WIRE CONNECTOR (2)
9 - SCREW (2)

DRIVER AIRBAG (Continued)

pull the insulators straight out from the airbag inflator to disconnect them from the connector receptacles.

(6) Remove the driver airbag from the steering wheel.

(7) If the driver airbag has been deployed, the clockspring must be replaced. (Refer to 8 - ELECTRICAL/RESTRAINTS/CLOCKSPRING - REMOVAL).

INSTALLATION

WARNING: To avoid personal injury or death, on vehicles equipped with airbags, disable the supplemental restraint system before attempting any steering wheel, steering column, airbag, occupant classification system, seat belt tensioner, impact sensor, or instrument panel component diagnosis or service. Disconnect and isolate the battery negative (ground) cable, then wait two minutes for the system capacitor to discharge before performing further diagnosis or service. This is the only sure way to disable the supplemental restraint system. Failure to take the proper precautions could result in accidental airbag deployment.

WARNING: To avoid personal injury or death, use extreme care to prevent any foreign material from entering the driver airbag, or becoming entrapped between the driver airbag cushion and the driver airbag trim cover. Failure to observe this warning could result in occupant injuries upon airbag deployment.

WARNING: To avoid personal injury or death, the driver airbag trim cover must never be painted. Replacement airbags are serviced with trim covers in the original colors. Paint may change the way in which the material of the trim cover responds to an airbag deployment. Failure to observe this warning could result in occupant injuries upon airbag deployment.

NOTE: The following procedure is for replacement of a faulty or damaged driver airbag. If the airbag is faulty or damaged, but not deployed, review the recommended procedures for handling non-deployed supplemental restraints. (Refer to 8 - ELECTRICAL/RESTRAINTS - STANDARD PROCEDURE - HANDLING NON-DEPLOYED SUPPLEMENTAL RESTRAINTS). If the driver airbag has been deployed, review the recommended procedures for service after a supplemental restraint deployment before removing the airbag from the vehicle. (Refer to 8 - ELECTRICAL/RESTRAINTS - STANDARD PROCEDURE - SERVICE AFTER A SUPPLEMENTAL RESTRAINT DEPLOYMENT).

(1) Position the driver airbag close enough to the steering wheel to reconnect the three electrical connections on the back of the airbag housing.

(2) When installing the driver airbag, reconnect the two clockspring driver airbag pigtail wire connectors to the airbag inflator connector receptacles by pressing straight in on the connectors (Fig. 27). Be certain to engage each keyed and color-coded connector to the matching connector receptacle. You can be certain that each connector is fully engaged in its receptacle by listening carefully for a distinct, audible click as the connector latches snap into place.

(3) Reconnect the steering wheel wire harness connector for the horn switch to the horn switch feed pigtail wire connector, which is located at the back of the driver airbag housing.

(4) Carefully position the driver airbag in the steering wheel. Be certain that the clockspring pigtail wires and steering wheel wire harness in the steering wheel hub area are not pinched between the driver airbag and the steering wheel armature.

(5) From the underside of the steering wheel, install and tighten the two screws that secure the driver airbag to the steering wheel armature. Tighten the screws to 10 N·m (90 in. lbs.).

(6) Do not reconnect the battery negative cable at this time. The supplemental restraint system verification test procedure should be performed following service of any supplemental restraint system component. (Refer to 8 - ELECTRICAL/RESTRAINTS - STANDARD PROCEDURE - VERIFICATION TEST).

IMPACT SENSOR

DESCRIPTION

FRONT

Two front impact sensors are used on this model, one each for the left and right sides of the vehicle (Fig. 28). These sensors are mounted remotely from the impact sensor that is internal to the Airbag Control Module (ACM). Each front sensor is secured with a screw to the backs of the right and left vertical members of the radiator support within the engine compartment. The sensor housing has an integral connector receptacle, an integral anti-rotation pin, and an integral mounting hole with a metal sleeve to provide crush protection.

The right and left front impact sensors are identical in construction and calibration. A cavity in the center of the molded black plastic impact sensor housing contains the electronic circuitry of the sensor which includes an electronic communication chip and

IMPACT SENSOR (Continued)

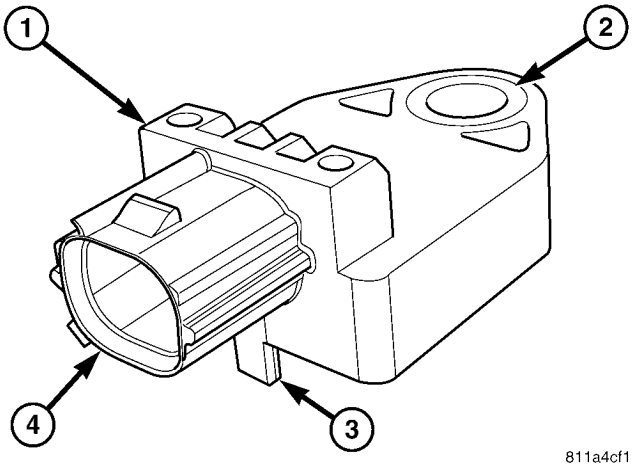

Fig. 28 Front Impact Sensor

1 - IMPACT SENSOR
2 - MOUNTING HOLE
3 - ANTI-ROTATION PIN
4 - CONNECTOR RECEPTACLE

an electronic impact sensor. Potting material fills the cavity to seal and protect the internal electronic circuitry and components. The front impact sensors are each connected to the vehicle electrical system through a dedicated take out and connector of the headlamp and dash wire harness.

The impact sensors cannot be repaired or adjusted and, if damaged or faulty, they must be replaced.

SIDE

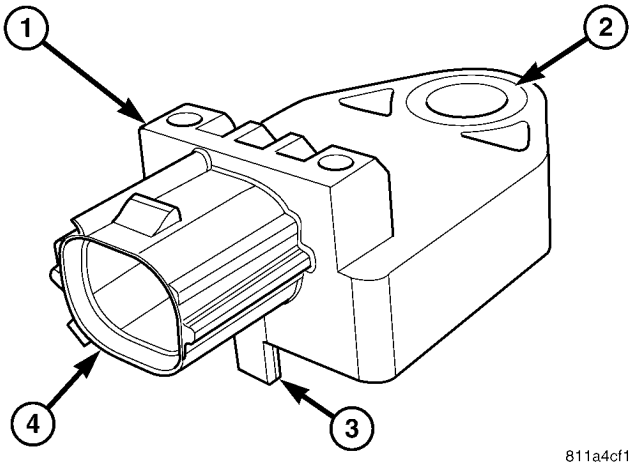

Fig. 29 Side Impact Sensor

1 - IMPACT SENSOR
2 - MOUNTING HOLE
3 - ANTI-ROTATION PIN
4 - CONNECTOR RECEPTACLE

Two side impact sensors are used on this model when it is equipped with the optional side curtain airbags, one each for the left and right sides of the vehicle (Fig. 29). These sensors are mounted remotely from the impact sensor that is internal to the Airbag Control Module (ACM). Each side sensor is secured with a screw to the inner right or left B-pillar above the front seat belt retractor within the passenger compartment. The sensor housing has an integral connector receptacle, an integral anti-rotation pin, and an integral mounting hole with a metal sleeve to provide crush protection.

The right and left side impact sensors are identical in construction and calibration. A cavity in the center of the molded black plastic impact sensor housing contains the electronic circuitry of the sensor which includes an electronic communication chip and an electronic impact sensor. Potting material fills the cavity to seal and protect the internal electronic circuitry and components. The side impact sensors are each connected to the vehicle electrical system through a dedicated take out and connector of the body wire harness.

The impact sensors cannot be repaired or adjusted and, if damaged or faulty, they must be replaced.

OPERATION

FRONT

The front impact sensors are electronic accelerometers that sense the rate of vehicle deceleration, which provides verification of the direction and severity of an impact. Each sensor also contains an electronic communication chip that allows the unit to communicate the sensor status as well as sensor fault information to the microprocessor in the Airbag Control Module (ACM).

The ACM microprocessor continuously monitors all of the passive restraint system electrical circuits to determine the system readiness. If the ACM detects a monitored system fault, it sets a Diagnostic Trouble Code (DTC) and controls the airbag indicator operation accordingly. The impact sensors each receive battery current and ground through dedicated left and right sensor plus and minus circuits from the ACM. The impact sensors and the ACM communicate by modulating the voltage in the sensor plus circuit.

The hard wired circuits between the front impact sensors and the ACM may be diagnosed and tested using conventional diagnostic tools and procedures. However, conventional diagnostic methods will not prove conclusive in the diagnosis of the ACM, the impact sensors, or the electronic message inputs to or outputs from the impact sensors. The most reliable, efficient, and accurate means to diagnose the impact sensors, the ACM, and the electronic message communication between the sensors and the ACM requires the use of a diagnostic scan tool. Refer to the appropriate diagnostic information.

IMPACT SENSOR (Continued)

SIDE

The side impact sensors are electronic accelerometers that sense the rate of vehicle deceleration, which provides verification of the direction and severity of an impact. Each sensor also contains an electronic communication chip that allows the unit to communicate the sensor status as well as sensor fault information to the microprocessor in the Airbag Control Module (ACM).

The ACM microprocessor continuously monitors all of the side passive restraint system electrical circuits to determine the system readiness. If the ACM detects a monitored system fault, it sets a Diagnostic Trouble Code (DTC) and controls the airbag indicator operation accordingly. The impact sensors each receive battery current and ground through dedicated left and right sensor plus and minus circuits from the ACM. The impact sensors and the ACM communicate by modulating the voltage in the sensor plus circuit.

The hard wired circuits between the side impact sensors and the ACM may be diagnosed and tested using conventional diagnostic tools and procedures. However, conventional diagnostic methods will not prove conclusive in the diagnosis of the ACM, the impact sensors, or the electronic message inputs to or outputs from the impact sensors. The most reliable, efficient, and accurate means to diagnose the impact sensors, the ACM, and the electronic message communication between the sensors and the ACM requires the use of a diagnostic scan tool. Refer to the appropriate diagnostic information.

REMOVAL

FRONT

WARNING: To avoid personal injury or death, on vehicles equipped with airbags, disable the supplemental restraint system before attempting any steering wheel, steering column, airbag, occupant classification system, seat belt tensioner, impact sensor, or instrument panel component diagnosis or service. Disconnect and isolate the battery negative (ground) cable, then wait two minutes for the system capacitor to discharge before performing further diagnosis or service. This is the only sure way to disable the supplemental restraint system. Failure to take the proper precautions could result in accidental airbag deployment.

WARNING: To avoid personal injury or death, never strike or drop the front impact sensor, as it can damage the impact sensor or affect its calibration. The front impact sensor enables the system to deploy the front supplemental restraints. If an impact sensor is accidentally dropped during service, the sensor must be scrapped and replaced with a new unit. Failure to observe this warning could result in accidental, incomplete, or improper front supplemental restraint deployment.

(1) Disconnect and isolate the battery negative cable. Wait two minutes for the system capacitor to discharge before further service.

(2) Remove the screw that secures the right or left front impact sensor to the back of the right or left radiator support vertical member (Fig. 30).

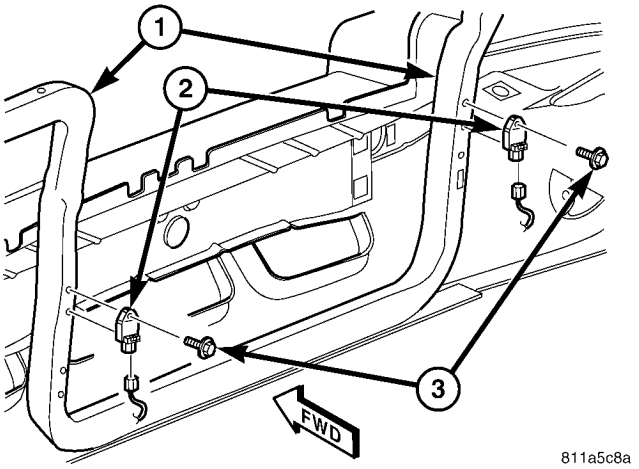

Fig. 30 Front Impact Sensor Remove/Install

1 - RADIATOR SUPPORT
2 - IMPACT SENSOR
3 - SCREW (2)

(3) Disconnect the headlamp and dash wire harness connector for the front impact sensor from the sensor connector receptacle.

(4) Remove the right or left front impact sensor from the engine compartment.

SIDE

WARNING: To avoid personal injury or death, on vehicles equipped with airbags, disable the supplemental restraint system before attempting any steering wheel, steering column, airbag, occupant classification system, seat belt tensioner, impact sensor, or instrument panel component diagnosis or service. Disconnect and isolate the battery negative (ground) cable, then wait two minutes for the system capacitor to discharge before performing further diagnosis or service. This is the only sure way to disable the supplemental restraint system. Failure to take the proper precautions could result in accidental airbag deployment.

IMPACT SENSOR (Continued)

WARNING: To avoid personal injury or death, never strike or drop the side impact sensor, as it can damage the impact sensor or affect its calibration. The side impact sensor enables the system to deploy the side curtain supplemental restraints. If an impact sensor is accidentally dropped during service, the sensor must be scrapped and replaced with a new unit. Failure to observe this warning could result in accidental, incomplete, or improper side supplemental restraint deployment.

(1) Adjust the driver or passenger side front seat to its most forward position for easiest access to the B-pillar trim.

(2) Disconnect and isolate the battery negative cable. Wait two minutes for the system capacitor to discharge before further service.

(3) Remove the lower trim from the inside of the right or left B-pillar. (Refer to 23 - BODY/INTERIOR/ B-PILLAR LOWER TRIM - REMOVAL).

(4) Remove the screw that secures the right or left side impact sensor to the lower B-pillar (Fig. 31).

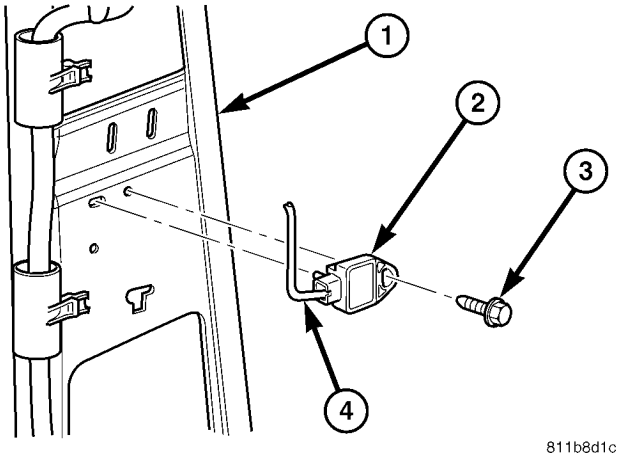

Fig. 31 Side Impact Sensor Remove/Install

1 - B-PILLAR
2 - SIDE IMPACT SENSOR
3 - SCREW
4- BODY WIRE HARNESS

(5) Disconnect the body wire harness connector for the side impact sensor from the sensor connector receptacle.

(6) Remove the right or left side impact sensor from the passenger compartment.

INSTALLATION

FRONT

WARNING: To avoid personal injury or death, on vehicles equipped with airbags, disable the supplemental restraint system before attempting any steering wheel, steering column, airbag, occupant classification system, seat belt tensioner, impact sensor, or instrument panel component diagnosis or service. Disconnect and isolate the battery negative (ground) cable, then wait two minutes for the system capacitor to discharge before performing further diagnosis or service. This is the only sure way to disable the supplemental restraint system. Failure to take the proper precautions could result in accidental airbag deployment.

WARNING: To avoid personal injury or death, never strike or drop the front impact sensor, as it can damage the impact sensor or affect its calibration. The front impact sensor enables the system to deploy the front supplemental restraints. If an impact sensor is accidentally dropped during service, the sensor must be scrapped and replaced with a new unit. Failure to observe this warning could result in accidental, incomplete, or improper front supplemental restraint deployment.

(1) Position the right or left front impact sensor into the engine compartment (Fig. 30).

(2) Reconnect the headlamp and dash wire harness connector for the front impact sensor to the sensor connector receptacle.

(3) Position the sensor onto the back of the right or left radiator support vertical member. Be certain that the anti-rotation pin on the back of the sensor is engaged in the lower clearance hole of the radiator support.

(4) Install and tighten the screw that secures the sensor to the back of the support vertical member. Tighten the screw to 7 N·m (65 in. lbs.).

(5) Do not reconnect the battery negative cable at this time. The supplemental restraint system verification test procedure should be performed following service of any supplemental restraint system component. (Refer to 8 - ELECTRICAL/RESTRAINTS - STANDARD PROCEDURE - VERIFICATION TEST).

IMPACT SENSOR (Continued)

SIDE

WARNING: To avoid personal injury or death, on vehicles equipped with airbags, disable the supplemental restraint system before attempting any steering wheel, steering column, airbag, occupant classification system, seat belt tensioner, impact sensor, or instrument panel component diagnosis or service. Disconnect and isolate the battery negative (ground) cable, then wait two minutes for the system capacitor to discharge before performing further diagnosis or service. This is the only sure way to disable the supplemental restraint system. Failure to take the proper precautions could result in accidental airbag deployment.

WARNING: To avoid personal injury or death, never strike or drop the side impact sensor, as it can damage the impact sensor or affect its calibration. The side impact sensor enables the system to deploy the side curtain supplemental restraints. If an impact sensor is accidentally dropped during service, the sensor must be scrapped and replaced with a new unit. Failure to observe this warning could result in accidental, incomplete, or improper side supplemental restraint deployment.

(1) Position the right or left side impact sensor near the lower B-pillar in the passenger compartment (Fig. 31).

(2) Reconnect the body wire harness connector for the side impact sensor to the sensor connector receptacle.

(3) Position the right or left side impact sensor onto the inner B-pillar. Be certain that the anti-rotation pin on the back of the sensor is engaged in the clearance hole of the B-pillar.

(4) Install and tighten the screw that secures the right or left side impact sensor to the inner B-pillar. Tighten the screw to 11 N·m (100 in. lbs.).

(5) Reinstall the lower trim onto the inside of the B-pillar. (Refer to 23 - BODY/INTERIOR/B-PILLAR LOWER TRIM - INSTALLATION).

(6) Do not reconnect the battery negative cable at this time. The supplemental restraint system verification test procedure should be performed following service of any supplemental restraint system component. (Refer to 8 - ELECTRICAL/RESTRAINTS - STANDARD PROCEDURE - VERIFICATION TEST).

OCCUPANT CLASSIFICATION MODULE

DESCRIPTION

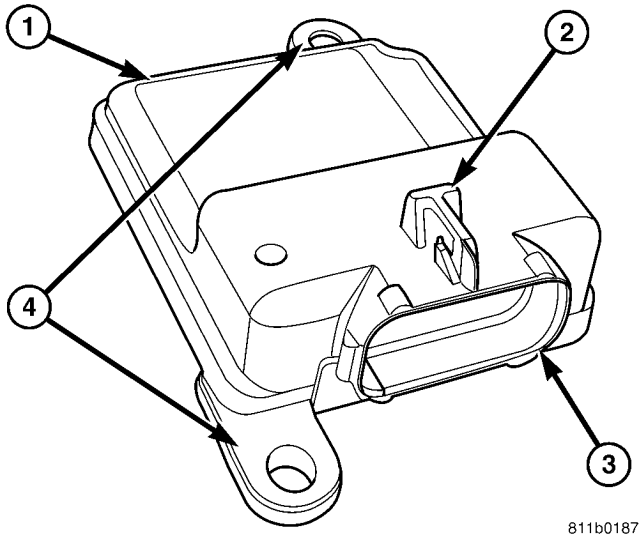

Fig. 32 Occupant Classification Module

1 - OCCUPANT CLASSIFICATION MODULE
2 - CONNECTOR LOCK TOWER
3 - CONNECTOR RECEPTACLE
4 - MOUNTING TAB (2)

The Occupant Classification Module (OCM) is secured with two screws to a stamped steel mounting bracket welded onto the underside of the passenger side front seat cushion frame near the inboard front corner (Fig. 32). Concealed within a hollow in the center of the molded plastic OCM housing is a microprocessor and the other electronic circuitry of the module. The module housing is sealed to enclose and protect the internal electronic circuitry. The OCM software is flash programmable.

Two mounting tabs, a connector lock tower, and a connector receptacle are integral to the OCM housing. The connector receptacle contains terminal pins that connect the OCM to the vehicle electrical system through a dedicated take out and connector of the passenger side front seat wire harness. A molded plastic lock pin is integral to one end of a long tether, while the other end of the tether is secured to the seat wire harness. After the wire harness has been connected to the module, the lock pin is engaged through the lock tower on the module housing preventing the connector latches from becoming disengaged and ensuring that a secure electrical connection is maintained at all times.

A non-calibrated OCM is the only component of the Occupant Classification System (OCS) that is available for separate service replacement. The OCS com-

OCCUPANT CLASSIFICATION MODULE (Continued)

ponents of the passenger side front seat cushion including the cushion frame, springs, insulator pad, seat weight bladder and pressure sensor, seat cushion foam, wiring harness and the OCM are a factory-calibrated and assembled unit. Once this unit is connected to a vehicle electrically, the calibration settings are uploaded from the calibrated OCM and stored in the memory of the ACM. If only the OCM is subsequently replaced, the new, non-calibrated OCM learns the proper calibration settings from the ACM after it is connected to the vehicle electrically.

The OCM cannot be adjusted or repaired and, if damaged or faulty, it must be replaced. The components of the passenger side front seat cushion including the cushion frame, springs, insulator pad, seat weight bladder and pressure sensor, seat cushion foam, wire harness and the OCM are serviced only as a factory-calibrated, assembled and tamper-evident unit. Only the OCM and the seat cushion trim are available for separate service replacement. Once a service replacement package has been installed in a vehicle, the OCM can thereafter be serviced only by replacing the entire passenger side front seat cushion unit with another complete service replacement package.

OPERATION

The microprocessor in the Occupant Classification Module (OCM) contains the Occupant Classification System (OCS) logic circuits. The OCM uses On-Board Diagnostics (OBD) and can communicate with other electronic modules in the vehicle as well as with the diagnostic scan tool using the Programmable Communications Interface (PCI) data bus. This method of communication is also used for OCS diagnosis and testing through the 16-way data link connector located on the driver side lower edge of the instrument panel.

The OCM provides a nominal five volts to both the pressure sensor of the seat weight bladder beneath the passenger side front seat cushion and to the belt tension sensor on the passenger side front seat belt lower anchor through dedicated hard wired sensor voltage and sensor ground circuits. The OCM then monitors the return voltage from each of the sensors on dedicated hard wired data communication circuits. The bladder pressure sensor input allows the OCM to determine whether the passenger side front seat is occupied and the relative size of the occupant by providing a weight-sensing reference to the load on the seat cushion. The belt tension sensor provides an additional logic input to the OCM microprocessor that allows it to distinguish between the lower seat belt cinch loads of a belted occupant and the higher loads associated with a belted child seat.

Pre-programmed decision algorithms and OCS calibration allow the OCM microprocessor to determine when passenger airbag protection is appropriate based upon the seat cushion load as signaled by the bladder pressure sensor and the seat belt cinch load as signaled by the belt tension sensor. When the programmed conditions are met, the OCM sends the proper electronic occupant classification messages over the PCI data bus to the Airbag Control Module (ACM), and the ACM enables or disables the deployment circuits for the passenger front supplemental restraints. The ACM also provides a control output for the passenger airbag on/off indicator in the instrument panel grab handle based upon the electronic occupant classification messages it receives from the OCM.

The OCM microprocessor continuously monitors all of the OCS electrical circuits and components to determine the system readiness. If the OCM detects a monitored system fault, it sets an active and stored Diagnostic Trouble Code (DTC) and sends the appropriate electronic messages to the ACM over the PCI data bus. Then the ACM sets a DTC and sends messages to control the airbag indicator operation accordingly. An active fault only remains for the duration of the fault, or in some cases for the duration of the current ignition switch cycle, while a stored fault causes a DTC to be stored in memory by the OCM and the ACM. For some DTCs, if a fault does not recur for a number of ignition cycles, the OCM will automatically erase the stored DTC. For other internal faults, the stored DTC is latched forever.

The OCM receives battery current on a fused ignition switch output (run-start) circuit through a fuse in the Junction Block (JB). The OCM receives ground through a ground circuit and take out of the body wire harness, which it shares with the ACM. This take out has a single eyelet terminal connector that is secured by a ground screw to the top of the right front seat riser on the floor panel beneath the right front seat. These connections allow the OCM to be operational whenever the ignition switch is in the Start or On positions.

The hard wired inputs and outputs for the OCM may be diagnosed and tested using conventional diagnostic tools and procedures. However, conventional diagnostic methods will not prove conclusive in the diagnosis of the OCM, the PCI data bus network, or the electronic message inputs to and outputs from the OCM. The most reliable, efficient, and accurate means to diagnose the OCM, the PCI data bus network, and the electronic message inputs to and outputs from the OCM requires the use of a diagnostic scan tool. Refer to the appropriate diagnostic information.

OCCUPANT CLASSIFICATION MODULE (Continued)

REMOVAL

A non-calibrated Occupant Classification Module (OCM) is the only component of the Occupant Classification System (OCS) that is available for separate service replacement, as outlined in the procedures that follow. The OCS components of the passenger side front seat cushion including the cushion frame, springs, pad, seat weight bladder and pressure sensor, seat cushion foam and the OCM are a factory-calibrated and assembled unit. Once this unit is connected to a vehicle electrically, the calibration settings are uploaded from the OCM and stored in the memory of the Airbag Control Module (ACM). If only the OCM is subsequently replaced, the new, non-calibrated OCM learns the proper calibration settings from the ACM after it is connected to the vehicle electrically.

If any of the remaining OCS components of the passenger side front seat cushion require replacement, they are serviced only as a factory-calibrated, assembled, and tamper-evident service replacement package. This package includes the assembled frame, springs, pad, seat weight bladder and pressure sensor, foam, wiring and a calibrated OCM. When installing this package, always replace all of the existing components with the new components as a unit. Do not attempt to separate or disconnect any of the new OCS components contained in the service replacement package from each other, and do not attempt to reuse any of the replaced components in this or any other vehicle.

Once any of the original factory-installed components except the OCM have been replaced with the service replacement package components, the OCM can only be serviced by replacing the entire passenger side front seat cushion unit with another complete service replacement package. Any time any one of these components is removed or replaced for any reason, the OCM must be re-calibrated using a diagnostic scan tool, the Occupant Classification Seat Weight special tool, and the Occupant Classification System Verification Test. Refer to the appropriate diagnostic procedures.

WARNING: To avoid personal injury or death, on vehicles equipped with airbags, disable the supplemental restraint system before attempting any steering wheel, steering column, airbag, occupant classification system, seat belt tensioner, impact sensor, or instrument panel component diagnosis or service. Disconnect and isolate the battery negative (ground) cable, then wait two minutes for the system capacitor to discharge before performing further diagnosis or service. This is the only sure way to disable the supplemental restraint system. Failure to take the proper precautions could result in accidental airbag deployment.

WARNING: To avoid personal injury or death on vehicles equipped with the Occupant Classification System (OCS), only the Occupant Classification Module (OCM) and the seat cushion trim may be serviced separately. All other components of the passenger side front seat cushion assembly must be serviced only as a complete factory-calibrated, assembled and tamper-evident service replacement package. This package includes the frame, springs, pad, bladder and pressure sensor, foam, wiring and a calibrated OCM. When installing this package always replace all of the existing components with the new components as a unit. Do not attempt to separate or disconnect any of the new OCS components in the service replacement package from each other, and do not attempt to reuse any of the replaced components in this or any other vehicle. Failure to take the proper precautions could result in failure of the passenger airbag to deploy when required, or in passenger airbag deployment when not required.

CAUTION: On vehicles equipped with the Occupant Classification System (OCS), never replace both the Airbag Control Module (ACM) and the Occupant Classification Module (OCM) at the same time. If both require replacement, replace one. Then perform the supplemental restraint verification test before replacing the other. Both the ACM and the OCM store OCS calibration data, which they transfer to one another when one of them is replaced. If both are replaced at the same time, an irreversible fault will be set in both modules.

(1) Disconnect and isolate the battery negative cable. Wait two minutes for the system capacitor to discharge before further service.

(2) Reach under the front edge of the passenger side front seat cushion to access and remove the lock pin from the connector lock tower on the Occupant Classification Module (OCM) (Fig. 33).

(3) Disconnect the passenger side front seat wire harness connector for the OCM from the OCM connector receptacle located on the forward facing side of the module.

(4) Remove the two screws that secure the OCM to the OCM bracket that is welded onto the underside of the passenger side front seat cushion frame.

(5) Remove the OCM from under the passenger side front seat.

OCCUPANT CLASSIFICATION MODULE (Continued)

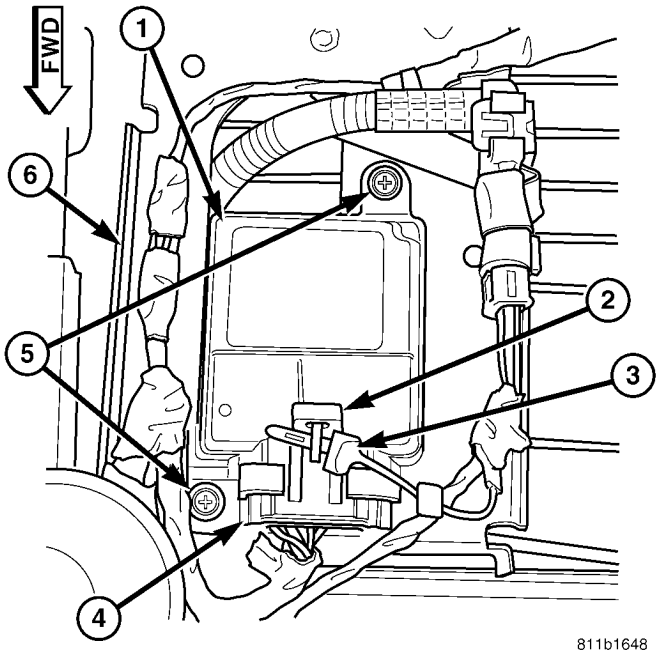

Fig. 33 Occupant Classification Module Remove/ Install

1 - OCCUPANT CLASSIFICATION MODULE
2 - LOCK TOWER
3 - LOCK PIN
4 - CONNECTOR
5 - SCREW (2)
6 - BRACKET

INSTALLATION

A non-calibrated Occupant Classification Module (OCM) is the only component of the Occupant Classification System (OCS) that is available for separate service replacement, as outlined in the procedures that follow. The OCS components of the passenger side front seat cushion including the cushion frame, springs, pad, seat weight bladder and pressure sensor, seat cushion foam and the OCM are a factory-calibrated and assembled unit. Once this unit is connected to a vehicle electrically, the calibration settings are uploaded from the OCM and stored in the memory of the Airbag Control Module (ACM). If only the OCM is subsequently replaced, the new, non-calibrated OCM learns the proper calibration settings from the ACM after it is connected to the vehicle electrically.

If any of the remaining OCS components of the passenger side front seat cushion require replacement, they are serviced only as a factory-calibrated, assembled, and tamper-evident service replacement package. This package includes the assembled frame, springs, pad, seat weight bladder and pressure sensor, foam, wiring and a calibrated OCM. When installing this package, always replace all of the existing components with the new components as a unit. Do not attempt to separate or disconnect any of the new OCS components contained in the service replacement package from each other, and do not attempt to reuse any of the replaced components in this or any other vehicle.

Once any of the original factory-installed components except the OCM have been replaced with the service replacement package components, the OCM can only be serviced by replacing the entire passenger side front seat cushion unit with another complete service replacement package. Any time any one of these components is removed or replaced for any reason, the OCM must be re-calibrated using a diagnostic scan tool, the Occupant Classification Seat Weight special tool, and the Occupant Classification System Verification Test. Refer to the appropriate diagnostic procedures.

WARNING: To avoid personal injury or death, on vehicles equipped with airbags, disable the supplemental restraint system before attempting any steering wheel, steering column, airbag, occupant classification system, seat belt tensioner, impact sensor, or instrument panel component diagnosis or service. Disconnect and isolate the battery negative (ground) cable, then wait two minutes for the system capacitor to discharge before performing further diagnosis or service. This is the only sure way to disable the supplemental restraint system. Failure to take the proper precautions could result in accidental airbag deployment.

WARNING: To avoid personal injury or death on vehicles equipped with the Occupant Classification System (OCS), only the Occupant Classification Module (OCM) and the seat cushion trim may be serviced separately. All other components of the passenger side front seat cushion assembly must be serviced only as a complete factory-calibrated, assembled and tamper-evident service replacement package. This package includes the frame, springs, pad, bladder and pressure sensor, foam, wiring and a calibrated OCM. When installing this package always replace all of the existing components with the new components as a unit. Do not attempt to separate or disconnect any of the new OCS components in the service replacement package from each other, and do not attempt to reuse any of the replaced components in this or any other vehicle. Failure to take the proper precautions could result in failure of the passenger airbag to deploy when required, or in passenger airbag deployment when not required.

OCCUPANT CLASSIFICATION MODULE (Continued)

CAUTION: On vehicles equipped with the Occupant Classification System (OCS), never replace both the Airbag Control Module (ACM) and the Occupant Classification Module (OCM) at the same time. If both require replacement, replace one. Then perform the supplemental restraint verification test before replacing the other. Both the ACM and the OCM store OCS calibration data, which they transfer to one another when one of them is replaced. If both are replaced at the same time, an irreversible fault will be set in both modules.

(1) Carefully position the Occupant Classification Module (OCM) to the OCM bracket that is welded onto the underside of the passenger side front seat cushion frame (Fig. 33). When the OCM is correctly positioned, the connector receptacle on the module will be pointed forward in the vehicle.

(2) Install and tighten the two screws that secure the OCM to the OCM bracket that is welded onto the underside of the passenger side front seat cushion frame. Tighten the screws to 2 N·m (20 in. lbs.).

(3) Reconnect the passenger side front seat wire harness connector for the OCM to the OCM connector receptacle located on the forward facing side of the module. Be certain that the latches on the connector are each fully engaged.

(4) Reinstall the lock pin into the connector lock tower on the OCM.

(5) Do not reconnect the battery negative cable at this time. The supplemental restraint system verification test procedure should be performed following service of any supplemental restraint system component. (Refer to 8 - ELECTRICAL/RESTRAINTS - STANDARD PROCEDURE - VERIFICATION TEST).

(6) Following successful completion of the supplemental restraint system verification test procedure, perform the Occupant Classification System Verification Test using a diagnostic scan tool and the Occupant Classification Seat Weight special tool. Refer to the appropriate diagnostic procedures.

PASSENGER AIRBAG

DESCRIPTION

The rearward facing surface of the injection molded, thermoplastic passenger airbag door is the most visible part of the passenger airbag (Fig. 34). The passenger airbag door is located above the glove box opening on the instrument panel in front of the front seat passenger seating position.

The integral upper mounting flange of the airbag door is secured with five screws and the lower mounting flange with six screws to the instrument panel structural support. The passenger airbag door includes an integral air conditioning panel outlet housing and an integral side window demister outlet. An integral stamped metal bracket that reinforces the upper airbag door mounting flange is secured to the back of the door unit with heat stakes. The upper airbag door fasteners and mounting flange are concealed beneath the instrument panel top cover, while the lower fasteners and mounting flange are concealed beneath a bezel on the instrument panel above the glove box opening.

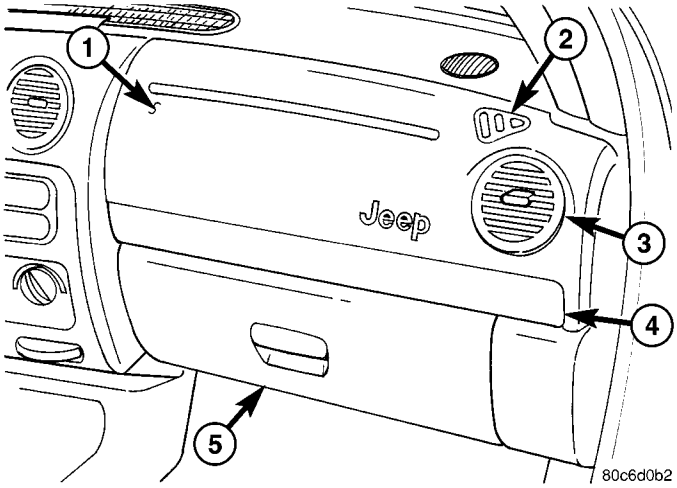

Fig. 34 Passenger Airbag Door

1 - PASSENGER AIRBAG DOOR
2 - DEMISTER OUTLET
3 - PANEL OUTLET
4 - BEZEL
5 - GLOVE BOX

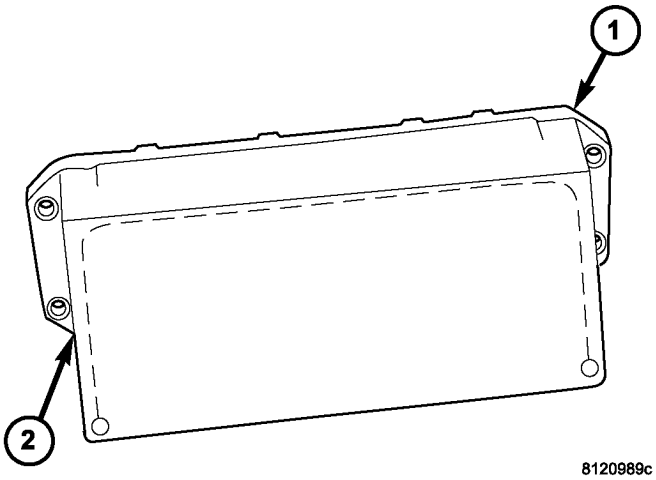

Fig. 35 Passenger Airbag Unit

1 - HOUSING
2 - INNER COVER

Located behind the passenger airbag door within the instrument panel is the passenger airbag unit (Fig. 35). The passenger airbag unit is secured by two screws on each side to two stamped metal

PASSENGER AIRBAG (Continued)

mounting brackets that are fastened with screws to the instrument panel structural support.

The passenger airbag unit used in this model is a multistage unit that complies with revised federal airbag standards to deploy with less force than those used in some prior models. The passenger airbag unit consists of a molded, glass-filled nylon plastic housing, a molded plastic inner airbag cushion cover, the airbag cushion, the airbag inflator and a heat shield. The airbag housing contains the airbag inflator and the heat shield, while the inner cover contains the folded airbag cushion. The inner cover completely encloses the airbag cushion and is permanently retained to the housing. The airbag cushion is constructed of a coated nylon fabric.

The airbag inflator is a dual-initiator, pyrotechnic-type unit that is secured to and sealed within the airbag housing. The passenger airbag is connected to the vehicle electrical system through two dedicated take outs of the instrument panel wire harness with connector insulators that connect directly to the two inflator initiators. The connector insulators are uniquely keyed and color-coded to ensure they can only be connected to the correct initiator.

The passenger airbag cannot be repaired, and must be replaced if deployed, faulty, or in any way damaged. If the passenger airbag is deployed, the passenger airbag door and both passenger airbag mounting brackets must also be replaced. The passenger airbag door and the passenger airbag mounting brackets are available for individual service replacement.

OPERATION

The multistage passenger airbag is deployed by electrical signals generated by the Airbag Control Module (ACM) through the passenger airbag squib 1 and squib 2 circuits to the two initiators in the airbag inflator. By using two initiators, the airbag can be deployed at multiple levels of force. The force level is controlled by the ACM to suit the monitored impact conditions by providing one of three delay intervals between the electrical signals provided to the two initiators. The longer the delay between these signals, the less forcefully the airbag will deploy.

The pyrotechnic-type inflator assembly includes two separate internal chambers filled with solid propellant. When the ACM sends the proper electrical signal to the airbag initiator, the initiator converts the electrical energy into chemical energy. This chemical energy ignites the solid propellant. As the solid propellant burns it produces a large quantity of inert gas. The inflator is sealed to the airbag cushion so that the inert gas is directed into the airbag cushion, causing the cushion to inflate. As the cushion inflates, the passenger airbag door will split at predetermined tear seam lines on the inside surface of the door and the door will pivot out of the way. Following a passenger airbag deployment, the airbag cushion quickly deflates by venting the inert gas through vent holes within the fabric used to construct the sides of the airbag cushion.

Typically, both initiators are used during an airbag deployment event. However, it is possible for only one initiator to be used during a deployment due to an airbag system fault; therefore, it is necessary to always confirm that both initiators have been used in order to avoid the improper disposal of potentially live pyrotechnic materials. (Refer to 8 - ELECTRICAL/RESTRAINTS - STANDARD PROCEDURE - SERVICE AFTER A SUPPLEMENTAL RESTRAINT DEPLOYMENT).

REMOVAL

AIRBAG

WARNING: To avoid personal injury or death, on vehicles equipped with airbags, disable the supplemental restraint system before attempting any steering wheel, steering column, airbag, occupant classification system, seat belt tensioner, impact sensor, or instrument panel component diagnosis or service. Disconnect and isolate the battery negative (ground) cable, then wait two minutes for the system capacitor to discharge before performing further diagnosis or service. This is the only sure way to disable the supplemental restraint system. Failure to take the proper precautions could result in accidental airbag deployment.

WARNING: To avoid personal injury or death, when removing a deployed airbag, rubber gloves, eye protection, and a long-sleeved shirt should be worn. There may be deposits on the airbag unit and other interior surfaces. In large doses, these deposits may cause irritation to the skin and eyes.

PASSENGER AIRBAG (Continued)

NOTE: The following procedure is for replacement of a faulty or damaged passenger airbag. If the airbag is faulty or damaged, but not deployed, review the recommended procedures for handling non-deployed supplemental restraints. (Refer to 8 - ELECTRICAL/RESTRAINTS - STANDARD PROCEDURE - HANDLING NON-DEPLOYED SUPPLEMENTAL RESTRAINTS). If the passenger airbag has been deployed, review the recommended procedures for service after a supplemental restraint deployment before removing the airbag from the vehicle. (Refer to 8 - ELECTRICAL/RESTRAINTS - STANDARD PROCEDURE - SERVICE AFTER A SUPPLEMENTAL RESTRAINT DEPLOYMENT).

(1) Disconnect and isolate the battery negative cable. Wait two minutes for the system capacitor to discharge before further service.

(2) Remove the passenger airbag door from the instrument panel. (Refer to 8 - ELECTRICAL/RESTRAINTS/PASSENGER AIRBAG DOOR - REMOVAL).

(3) Remove the two screws on each side of the passenger airbag housing that secure the passenger airbag to the metal brackets on the instrument panel support structure (Fig. 36).

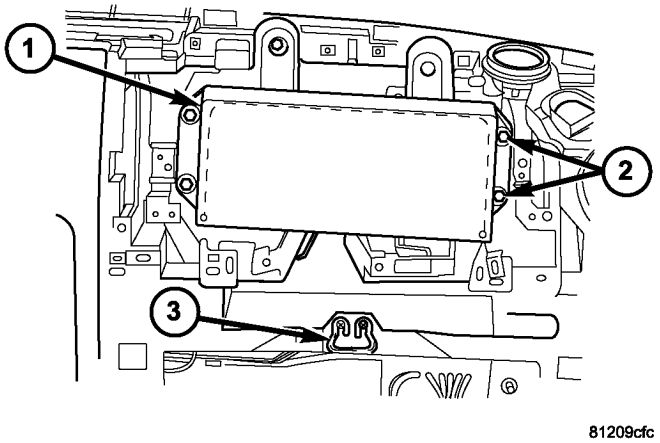

Fig. 36 Passenger Airbag Remove/Install

1 - PASSENGER AIRBAG
2 - SCREW (4)
3 - GLOVE BOX LATCH STRIKER

(4) Disengage the passenger airbag wire harness connector from the retainer securing the connector to the metal bracket on the instrument panel support structure above the airbag by sliding both halves of the connector to the left.

(5) Pull the passenger airbag away from the instrument panel far enough to access the two wire harness connectors for the airbag.

CAUTION: Do not pull on the instrument panel wire harness passenger airbag take outs or pry on the connector insulators to disengage the connectors from the passenger airbag inflator connector receptacles. Improper removal of these wires and their connector insulators can result in damage to the airbag circuits or connector insulators.

(6) The instrument panel passenger airbag wire harness connectors are secured by integral latches to the airbag inflator connector receptacles, which are located on the sides of the passenger airbag housing. Depress the latches on each side of each connector insulator and pull the insulators straight out from the airbag inflator to disconnect them from the connector receptacles.

(7) Remove the passenger airbag from the instrument panel as a unit.

(8) If the passenger airbag has been deployed, both passenger airbag mounting brackets on the instrument panel must be replaced. (Refer to 8 - ELECTRICAL/RESTRAINTS/PASSENGER AIRBAG MOUNTING BRACKET - REMOVAL).

DOOR

WARNING: To avoid personal injury or death on vehicles equipped with airbags, disable the supplemental restraint system before attempting any steering wheel, steering column, driver airbag, passenger airbag, occupant classification system, seat belt tensioner, front impact sensor, side impact sensor, side curtain airbag, or instrument panel component diagnosis or service. Disconnect and isolate the battery negative (ground) cable, then wait two minutes for the system capacitor to discharge before performing further diagnosis or service. This is the only sure way to disable the supplemental restraint system. Failure to take the proper precautions could result in accidental airbag deployment.

WARNING: To avoid personal injury or death on vehicles equipped with airbags, when removing a deployed airbag, rubber gloves, eye protection, and a long-sleeved shirt should be worn. There may be deposits on the airbag unit and other interior surfaces. In large doses, these deposits may cause irritation to the skin and eyes.

(1) Disconnect and isolate the battery negative cable. Wait two minutes for the system capacitor to discharge before further service.

(2) Remove the top cover from the instrument panel. (Refer to 23 - BODY/INSTRUMENT PANEL/INSTRUMENT PANEL TOP COVER - REMOVAL).

PASSENGER AIRBAG (Continued)

(3) Remove the passenger side bezel from the upper glove box opening of the instrument panel. (Refer to 23 - BODY/INSTRUMENT PANEL/IP PASSENGER SIDE BEZEL - REMOVAL).

(4) Remove the three small screws that secure the passenger airbag door to the glove box opening upper reinforcement (Fig. 37).

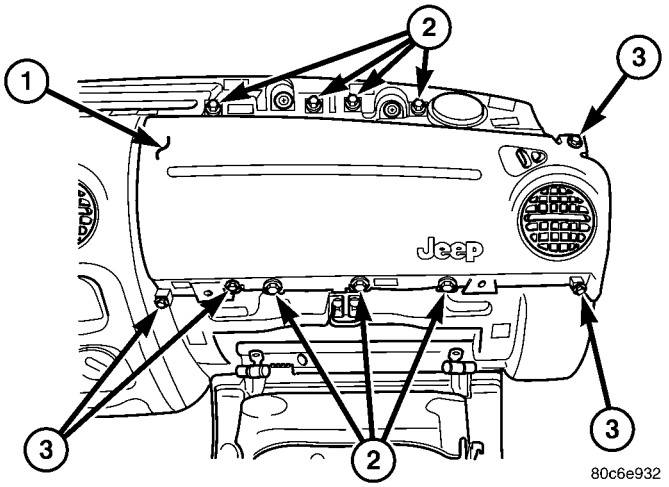

Fig. 37 Passenger Airbag Door Remove/Install

1 - PASSENGER AIRBAG DOOR
2 - LARGE SCREW (7)
3 - SMALL SCREW (4)

(5) Remove the three large screws that secure the passenger airbag door to the glove box opening upper reinforcement.

(6) Remove the one small screw that secures the passenger airbag door to the top of the instrument panel.

(7) Remove the four large screws that secure the passenger airbag door to the top of the instrument panel.

(8) Remove the passenger airbag door from the instrument panel.

BRACKETS

WARNING: To avoid personal injury or death on vehicles equipped with airbags, disable the supplemental restraint system before attempting any steering wheel, steering column, driver airbag, passenger airbag, occupant classification system, seat belt tensioner, front impact sensor, side impact sensor, side curtain airbag, or instrument panel component diagnosis or service. Disconnect and isolate the battery negative (ground) cable, then wait two minutes for the system capacitor to discharge before performing further diagnosis or service. This is the only sure way to disable the supplemental restraint system. Failure to take the proper precautions could result in accidental airbag deployment.

NOTE: The passenger airbag mounting brackets cannot be repaired. They must be replaced if faulty or damaged, or if the passenger airbag has been deployed.

(1) Remove the passenger airbag from the instrument panel. (Refer to 8 - ELECTRICAL/RESTRAINTS/PASSENGER AIRBAG - REMOVAL).

(2) Remove the two screws that secure the inboard and/or outboard passenger airbag mounting bracket(s) to the instrument panel support structure (Fig. 38).

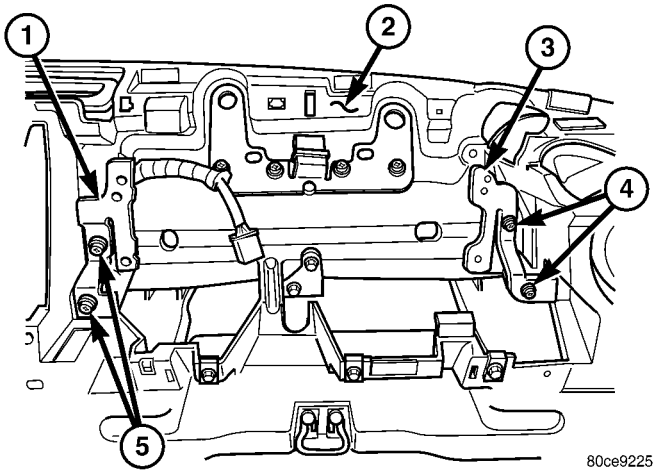

Fig. 38 Passenger Airbag Mounting Brackets Remove/Install

1 - INBOARD BRACKET
2 - I/P SUPPORT STRUCTURE
3 - OUTBOARD BRACKET
4 - SCREW (2)
5 - SCREW (2)

(3) Remove the inboard and/or outboard passenger airbag mounting bracket(s) from the instrument panel support structure.

INSTALLATION

AIRBAG

WARNING: To avoid personal injury or death, on vehicles equipped with airbags, disable the supplemental restraint system before attempting any steering wheel, steering column, airbag, occupant classification system, seat belt tensioner, impact sensor, or instrument panel component diagnosis or service. Disconnect and isolate the battery negative (ground) cable, then wait two minutes for the system capacitor to discharge before performing further diagnosis or service. This is the only sure way to disable the supplemental restraint system. Failure to take the proper precautions could result in accidental airbag deployment.

PASSENGER AIRBAG (Continued)

WARNING: To avoid personal injury or death, use extreme care to prevent any foreign material from entering the passenger airbag, or becoming entrapped between the passenger airbag cushion and the passenger airbag door. Failure to observe this warning could result in occupant injuries upon airbag deployment.

NOTE: The following procedure is for replacement of a faulty or damaged passenger airbag. If the airbag is faulty or damaged, but not deployed, review the recommended procedures for handling non-deployed supplemental restraints. (Refer to 8 - ELECTRICAL/RESTRAINTS - STANDARD PROCEDURE - HANDLING NON-DEPLOYED SUPPLEMENTAL RESTRAINTS). If the passenger airbag has been deployed, review the recommended procedures for service after a supplemental restraint deployment before removing the airbag from the vehicle. (Refer to 8 - ELECTRICAL/RESTRAINTS - STANDARD PROCEDURE - SERVICE AFTER A SUPPLEMENTAL RESTRAINT DEPLOYMENT).

(1) Position the passenger airbag unit close enough to the instrument panel to reconnect the electrical connections on each side of the airbag housing.

(2) When installing the passenger airbag, reconnect the two instrument panel wire harness connectors to the airbag inflator connector receptacles by pressing straight in on the connectors (Fig. 36). Be certain to engage each keyed and color-coded connector to the matching connector receptacle. You can be certain that each connector is fully engaged in its receptacle by listening carefully for a distinct, audible click as the connector latches snap into place.

(3) Carefully position the passenger airbag unit onto the two metal brackets on the instrument panel support structure. Be certain that the alignment pin features on each side of the airbag are engaged in the alignment holes in the metal brackets.

(4) Install and tighten the two screws on each side of the passenger airbag housing that secure the passenger airbag to the metal brackets on the instrument panel support structure. Tighten the screws to 6 N·m (55 in. lbs.).

(5) Reinstall the passenger airbag door onto the instrument panel. (Refer to 8 - ELECTRICAL/RESTRAINTS/PASSENGER AIRBAG DOOR - INSTALLATION).

(6) Do not reconnect the battery negative cable at this time. The supplemental restraint system verification test procedure should be performed following service of any supplemental restraint system component. (Refer to 8 - ELECTRICAL/RESTRAINTS - STANDARD PROCEDURE - VERIFICATION TEST).

DOOR

WARNING: To avoid personal injury or death on vehicles equipped with airbags, disable the supplemental restraint system before attempting any steering wheel, steering column, driver airbag, passenger airbag, occupant classification system, seat belt tensioner, front impact sensor, side impact sensor, side curtain airbag, or instrument panel component diagnosis or service. Disconnect and isolate the battery negative (ground) cable, then wait two minutes for the system capacitor to discharge before performing further diagnosis or service. This is the only sure way to disable the supplemental restraint system. Failure to take the proper precautions could result in accidental airbag deployment.

WARNING: To avoid personal injury or death on vehicles equipped with airbags, the passenger airbag door must never be painted. Replacement passenger airbag doors are serviced in the original colors. Paint may change the way in which the material of the airbag door responds to an airbag deployment. Failure to observe this warning could result in occupant injuries upon airbag deployment.

(1) Position the passenger airbag door onto the instrument panel (Fig. 37).

(2) Install and tighten the four large screws that secure the passenger airbag door to the top of the instrument panel. Tighten the screws to 4 N·m (35 in. lbs.).

(3) Install and tighten the one small screw that secures the passenger airbag door to the top of the instrument panel. Tighten the screw to 2 N·m (20 in. lbs.).

(4) Install and tighten the three large screws that secure the passenger airbag door to the glove box opening upper reinforcement. Tighten the screws to 4 N·m (35 in. lbs.).

(5) Install and tighten the three small screws that secure the passenger airbag door to the glove box opening upper reinforcement. Tighten the screws to 2 N·m (20 in. lbs.).

(6) Reinstall the passenger side bezel onto the upper glove box opening of the instrument panel. (Refer to 23 - BODY/INSTRUMENT PANEL/IP PASSENGER SIDE BEZEL - INSTALLATION).

(7) Reinstall the top cover onto the instrument panel. (Refer to 23 - BODY/INSTRUMENT PANEL/INSTRUMENT PANEL TOP COVER - INSTALLATION).

(8) Reconnect the battery negative cable.

PASSENGER AIRBAG (Continued)

BRACKETS

WARNING: To avoid personal injury or death on vehicles equipped with airbags, disable the supplemental restraint system before attempting any steering wheel, steering column, driver airbag, passenger airbag, occupant classification system, seat belt tensioner, front impact sensor, side impact sensor, side curtain airbag, or instrument panel component diagnosis or service. Disconnect and isolate the battery negative (ground) cable, then wait two minutes for the system capacitor to discharge before performing further diagnosis or service. This is the only sure way to disable the supplemental restraint system. Failure to take the proper precautions could result in accidental airbag deployment.

NOTE: The passenger airbag mounting brackets cannot be repaired. They must be replaced if faulty or damaged, or if the passenger airbag has been deployed.

(1) Position the inboard and/or outboard passenger airbag mounting bracket(s) to the instrument panel support structure (Fig. 38).

(2) Install and tighten the two screws that secure the inboard and/or outboard passenger airbag mounting bracket(s) to the instrument panel support structure. Tighten the screws to 2 N·m (20 in. lbs.).

(3) Reinstall the passenger airbag to the instrument panel. (Refer to 8 - ELECTRICAL/RESTRAINTS/PASSENGER AIRBAG - INSTALLATION).

PASSENGER AIRBAG ON/OFF INDICATOR

DESCRIPTION

Vehicles equipped with the Occupant Classification System (OCS) include a passenger airbag on/off indicator, which is located in the inboard grab handle end cap located on the instrument panel between the passenger airbag door and the glove box (Fig. 39). The passenger airbag on/off indicator and the grab handle are present only in vehicles equipped with the OCS. Vehicles without the OCS have only a trim bezel on the instrument panel, instead of a grab handle.

The passenger airbag on/off indicator consists of a molded plastic housing with an integral connector receptacle at the back, an integral latch tab on each side, and an oblong dark translucent outer lens.

The opaque words “PASS AIRBAG OFF” and an opaque International Control and Display Symbol icon for “Passenger Airbag Off or Not Available” are imprinted on the back of the lens within the indicator. The dark outer lens prevents the indicator text and icon from being clearly visible when it is not illuminated. An amber Light Emitting Diode (LED) behind the lens causes the “PASS AIRBAG OFF” text and icon to appear silhouetted against an amber field through the translucent lens when the indicator is illuminated from behind by the LED.

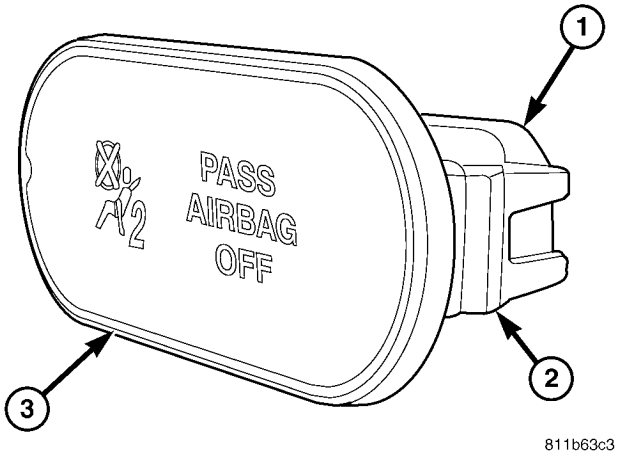

Fig. 39 Passenger Airbag On/Off Indicator

1 - CONNECTOR RECEPTACLE
2 - LATCH TAB (2)
3 - PASSENGER AIRBAG ON/OFF INDICATOR

The passenger airbag on/off indicator cannot be repaired or adjusted and, if faulty or damaged, the indicator unit must be replaced.

OPERATION

In vehicles equipped with the Occupant Classification System (OCS), the passenger airbag on/off indicator gives an indication when the passenger airbag and seat belt tensioner deployment circuits are disabled by the Airbag Control Module (ACM). This indicator is controlled by a transistor within the ACM through a hard wired output based upon ACM programming and electronic occupant classification messages received by the ACM over the Programmable Communications Interface (PCI) data bus from the Occupant Classification Module (OCM).

The passenger airbag on/off indicator Light Emitting Diode (LED) is completely controlled by the ACM. The LED receives a battery current input on the fused ignition switch output (run-start) circuit. Therefore, the LED will always be off when the ignition switch is in any position except On or Start. The LED only illuminates when it is provided a path to ground by the ACM transistor. The ACM will turn on the passenger airbag on/off indicator for the following reasons:

PASSENGER AIRBAG ON/OFF INDICATOR (Continued)

• **Bulb Test** - Each time the ignition switch is turned to the On position the passenger airbag on/off indicator is illuminated for about six seconds.

• **Child Seat Detected (or Load Less Than Fifth Percentile Female) Occupant Classification Message** - Each time the ACM receives a message from the OCM indicating a child seat has been detected in the passenger side front seat (or that the seat load is less than that of a fifth percentile female) the passenger airbag and seat belt tensioner deployment circuits are deactivated and the passenger airbag on/off indicator will be illuminated. The indicator remains illuminated until the ACM receives an occupant classification message indicating that the passenger side front seat is empty, that the seat is occupied by a load equal to or greater than a fifth percentile female, or until the ignition switch is turned to the Off position, whichever occurs first.

• **Load Undetermined Occupant Classification Message** - Each time the ACM receives a message from the OCM indicating that a load cannot be determined in the passenger side front seat, the passenger airbag and seat belt tensioner deployment circuits are deactivated and the passenger airbag on/off indicator will be illuminated. The indicator remains illuminated until the ACM receives an occupant classification message indicating that the passenger side front seat is empty, that the seat is occupied by a load equal to or greater than a fifth percentile female, or until the ignition switch is turned to the Off position, whichever occurs first.

• **Communication Error** - If the ACM receives invalid occupant classification messages or no messages from the OCM, the passenger airbag on/off indicator is illuminated. The indicator remains illuminated until the ACM receives a valid message from the OCM indicating that the passenger side front seat is empty, that the seat is occupied by a load equal to or greater than a fifth percentile female, or until the ignition switch is turned to the Off position, whichever occurs first.

The ACM continually monitors the occupant classification messages from the OCM to decide whether the passenger airbag and seat belt tensioner deployment circuits should be activated or deactivated. Note that there may be several seconds of delay between changes in the detected occupant status and passenger airbag on/off indications. This is a programmed feature of the OCM used to prevent a flashing indicator condition resulting from the normal shifting of occupant weight on the passenger seat cushion. The ACM then provides the proper control output to turn the passenger airbag on/off indicator on or off.

The ACM will store a Diagnostic Trouble Code (DTC) for any malfunction it detects. For proper diagnosis of the OCM, the ACM, the PCI data bus, or the electronic message inputs to the ACM that control the passenger airbag on/off indicator, a diagnostic scan tool is required. Refer to the appropriate diagnostic information.

REMOVAL

WARNING: To avoid personal injury or death, on vehicles equipped with airbags, disable the supplemental restraint system before attempting any steering wheel, steering column, airbag, occupant classification system, seat belt tensioner, impact sensor, or instrument panel component diagnosis or service. Disconnect and isolate the battery negative (ground) cable, then wait two minutes for the system capacitor to discharge before performing further diagnosis or service. This is the only sure way to disable the supplemental restraint system. Failure to take the proper precautions could result in accidental airbag deployment.

(1) Disconnect and isolate the battery negative cable. Wait two minutes for the system capacitor to discharge before further service.

(2) Using a trim stick or another suitable wide flat-bladed tool, gently pry the inboard grab handle end cap upwards at the parting line between the cap and the grab handle far enough to disengage the cap from the handle (Fig. 40).

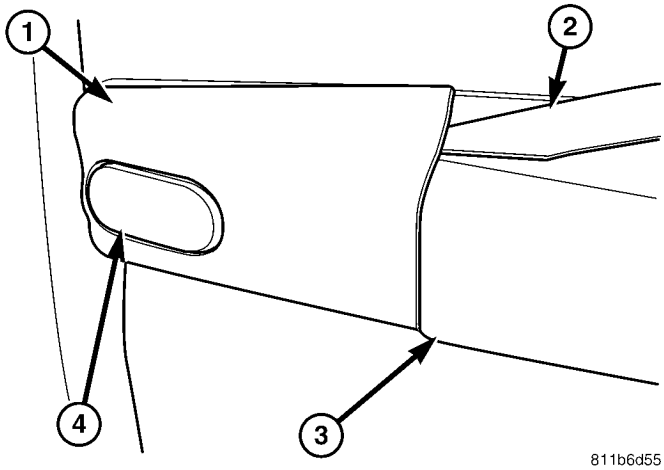

Fig. 40 Grab Handle End Cap Remove

1 - INBOARD END CAP
2 - TRIM STICK
3 - GRAB HANDLE
4 - INDICATOR

(3) Pull the end cap away from the instrument panel far enough to access and disconnect the wire harness connector for the passenger airbag on/off indicator from the indicator connector receptacle on the back of the indicator housing (Fig. 41).

PASSENGER AIRBAG ON/OFF INDICATOR (Continued)

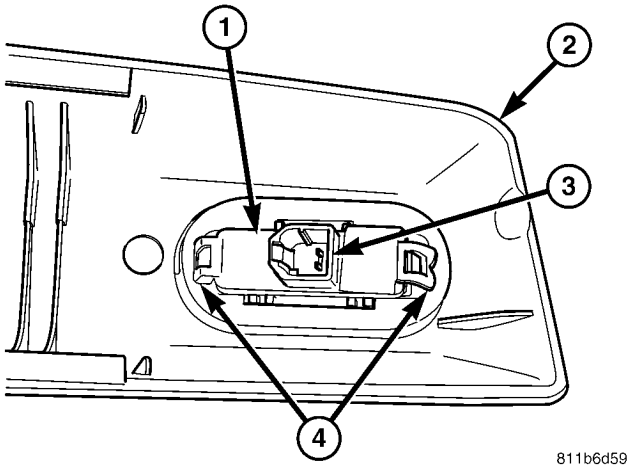

Fig. 41 Passenger Airbag On/Off Indicator Remove/ Install

1 - INDICATOR HOUSING
2 - INBOARD END CAP
3 - CONNECTOR RECEPTACLE
4 - LATCH (2)

(4) From the back of the inboard end cap, depress the two latches toward the indicator housing and push the indicator out through the face of the end cap.

INSTALLATION

WARNING: To avoid personal injury or death, on vehicles equipped with airbags, disable the supplemental restraint system before attempting any steering wheel, steering column, airbag, occupant classification system, seat belt tensioner, impact sensor, or instrument panel component diagnosis or service. Disconnect and isolate the battery negative (ground) cable, then wait two minutes for the system capacitor to discharge before performing further diagnosis or service. This is the only sure way to disable the supplemental restraint system. Failure to take the proper precautions could result in accidental airbag deployment.

(1) From the face of the inboard end cap, align the passenger airbag on/off indicator housing with the mounting hole.

(2) Using hand pressure, push the indicator firmly and evenly into inboard end cap until the two latches are fully engaged on the back of the cap (Fig. 41).

(3) Position the indicator and end cap unit close enough to the instrument panel to reconnect the wire harness connector for the indicator to the indicator connector receptacle. Be certain that the connector is fully engaged in the receptacle.

(4) Align the indicator and end cap unit with the inboard end of the grab handle, and engage the lower snap feature of the end cap to the bottom of the grab handle.

(5) Using hand pressure, push the upper edge of the end cap firmly and evenly over the top of the grab handle until the cap snaps into place.

(6) Do not reconnect the battery negative cable at this time. The supplemental restraint system verification test procedure should be performed following service of any supplemental restraint system component. (Refer to 8 - ELECTRICAL/RESTRAINTS - STANDARD PROCEDURE - VERIFICATION TEST).

(7) Following successful completion of the supplemental restraint system verification test procedure, perform the Occupant Classification System Verification Test using a diagnostic scan tool. Refer to the appropriate diagnostic procedures.

SEAT BELT BUCKLE

REMOVAL

FRONT

WARNING: To avoid personal injury or death, on vehicles equipped with airbags, disable the supplemental restraint system before attempting any steering wheel, steering column, airbag, occupant classification system, seat belt tensioner, impact sensor, or instrument panel component diagnosis or service. Disconnect and isolate the battery negative (ground) cable, then wait two minutes for the system capacitor to discharge before performing further diagnosis or service. This is the only sure way to disable the supplemental restraint system. Failure to take the proper precautions could result in accidental airbag deployment.

SEAT BELT BUCKLE (Continued)

WARNING: To avoid personal injury or death, during and following any seat belt or child restraint anchor service, carefully inspect all seat belts, buckles, mounting hardware, retractors, tether straps, and anchors for proper installation, operation, or damage. Replace any belt that is cut, frayed, or torn. Straighten any belt that is twisted. Tighten any loose fasteners. Replace any belt that has a damaged or inoperative buckle or retractor. Replace any belt that has a bent or damaged latch plate or anchor plate. Replace any child restraint anchor or the unit to which the anchor is integral that has been bent or damaged. Never attempt to repair a seat belt or child restraint component. Always replace damaged or faulty seat belt and child restraint components with the correct, new and unused replacement parts listed in the DaimlerChrysler Mopar Parts Catalog.

(1) On the driver side only, disconnect and isolate the battery negative cable. Wait two minutes for the system capacitor to discharge before further service.

(2) On the driver side only, remove the front seat and seat track from the floor panel as a unit. (Refer to 23 - BODY/SEATS/SEAT - FRONT - REMOVAL).

(3) On the driver side only, disconnect the seat belt switch pigtail wire connector from the seat wire harness connector on the seat cushion frame bracket located under the rear edge of the seat cushion near the inboard side of the seat (Fig. 42).

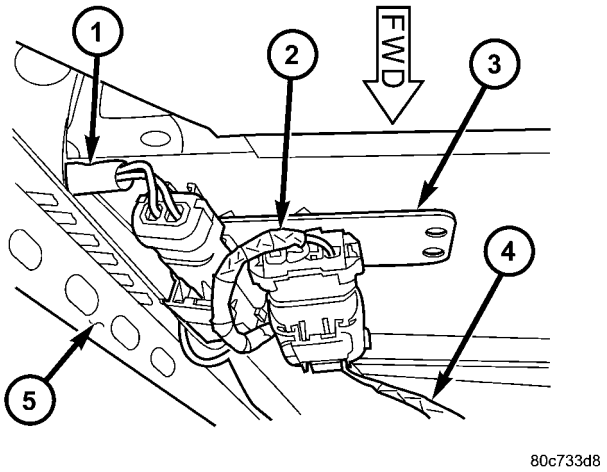

Fig. 42 Seat Belt Switch Connector

1 - PIGTAIL WIRE
2 - SEAT WIRE HARNESS
3 - SEAT CUSHION FRAME BRACKET
4 - BODY WIRE HARNESS
5 - INBOARD SEAT TRACK

(4) Remove the screw that secures the front seat belt buckle anchor to the bracket near the rear of the inboard seat track (Fig. 43).

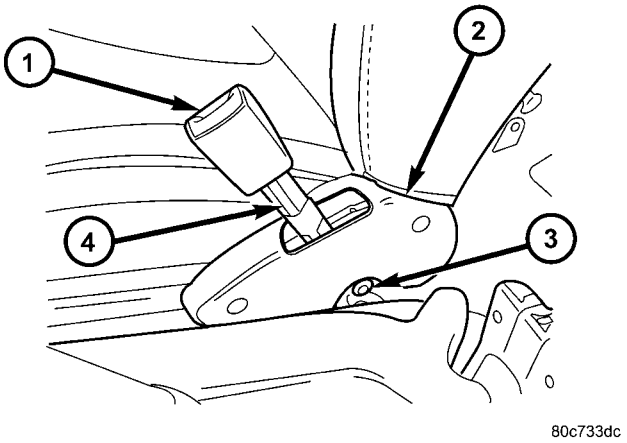

Fig. 43 Front Seat Belt Buckle Remove/Install

1 - FRONT SEAT BELT BUCKLE
2 - INBOARD SIDE SHIELD
3 - SCREW
4 - PIGTAIL WIRE

(5) On the driver side only, remove the two screws that secure the inboard seat cushion side shield to the seat cushion frame.

(6) On the driver side only, remove the two screws that secure the inboard seat track to the rear inboard corner of the seat cushion frame.

(7) On the driver side only, disconnect the seat belt switch pigtail wire routing clip from the locating hole in the seat cushion frame.

(8) On the driver side only, remove the seat belt switch pigtail wire from between the seat cushion frame and the seat track by gently prying the inboard seat track away from the inboard rear corner of the seat cushion frame far enough to slide the pigtail wire from between them.

(9) Remove the buckle from the seat.

SEAT BELT BUCKLE (Continued)

REAR

WARNING: To avoid personal injury or death, during and following any seat belt or child restraint anchor service, carefully inspect all seat belts, buckles, mounting hardware, retractors, tether straps, and anchors for proper installation, operation, or damage. Replace any belt that is cut, frayed, or torn. Straighten any belt that is twisted. Tighten any loose fasteners. Replace any belt that has a damaged or inoperative buckle or retractor. Replace any belt that has a bent or damaged latch plate or anchor plate. Replace any child restraint anchor or the unit to which the anchor is integral that has been bent or damaged. Never attempt to repair a seat belt or child restraint component. Always replace damaged or faulty seat belt and child restraint components with the correct, new and unused replacement parts listed in the DaimlerChrysler Mopar Parts Catalog.

(1) Unlatch the rear seat back and fold it forward far enough to access the screw that secures the rear seat belt buckle anchor to the rear floor panel between the rear seat back and the rear seat cushion.

(2) Remove the screw that secures the rear seat belt buckle anchor to the rear floor panel (Fig. 44).

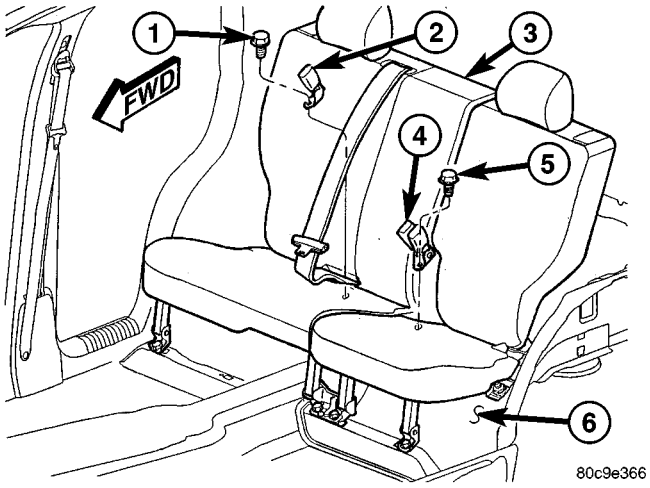

Fig. 44 Rear Seat Belt Buckle Remove/Install

1 - SCREW (1)
2 - BUCKLE (SINGLE)
3 - REAR SEAT
4 - BUCKLE (DOUBLE)
5 - SCREW (1)
6- REAR FLOOR PANEL

(3) Lift the rear seat belt buckle anchor off of the stud on the rear floor panel.

(4) Remove the rear seat belt buckle and anchor from between the rear seat back and the rear seat cushion as a unit.

INSTALLATION

FRONT

WARNING: To avoid personal injury or death, on vehicles equipped with airbags, disable the supplemental restraint system before attempting any steering wheel, steering column, airbag, occupant classification system, seat belt tensioner, impact sensor, or instrument panel component diagnosis or service. Disconnect and isolate the battery negative (ground) cable, then wait two minutes for the system capacitor to discharge before performing further diagnosis or service. This is the only sure way to disable the supplemental restraint system. Failure to take the proper precautions could result in accidental airbag deployment.

WARNING: To avoid personal injury or death, during and following any seat belt or child restraint anchor service, carefully inspect all seat belts, buckles, mounting hardware, retractors, tether straps, and anchors for proper installation, operation, or damage. Replace any belt that is cut, frayed, or torn. Straighten any belt that is twisted. Tighten any loose fasteners. Replace any belt that has a damaged or inoperative buckle or retractor. Replace any belt that has a bent or damaged latch plate or anchor plate. Replace any child restraint anchor or the unit to which the anchor is integral that has been bent or damaged. Never attempt to repair a seat belt or child restraint component. Always replace damaged or faulty seat belt and child restraint components with the correct, new and unused replacement parts listed in the DaimlerChrysler Mopar Parts Catalog.

(1) Position the front seat belt buckle lower anchor through the inboard seat cushion side shield (Fig. 43).

(2) On the driver side only, position the seat belt switch pigtail wire between the seat cushion frame and the seat track by gently prying the inboard seat track away from the inboard rear corner of the seat cushion frame far enough to slide the pigtail wire into position between them.

(3) On the driver side only, engage the seat belt switch pigtail wire routing clip into the locating hole in the seat cushion frame.

(4) On the driver side only, install and tighten the two screws that secure the inboard seat track to the rear inboard corner of the seat cushion frame. Tighten the screws to 28 N·m (21 ft. lbs.).

(5) On the driver side only, position the inboard seat cushion side shield to the seat cushion frame.

SEAT BELT BUCKLE (Continued)

(6) On the driver side only, install and tighten the two screws that secure the inboard seat cushion side shield to the seat cushion frame. Tighten the screws to 1 N·m (9 in. lbs.).

(7) Position the front seat belt buckle lower anchor to the bracket on the inboard side of the seat track.

(8) Install and tighten the screw that secures the front seat belt buckle anchor to the bracket on the inboard side of the seat track. Tighten the screw to 43 N·m (32 ft. lbs.).

(9) On the driver side only, reconnect the seat belt switch pigtail wire connector to the seat wire harness connector on the seat cushion frame bracket located under the rear edge of the seat cushion near the inboard side of the seat (Fig. 42).

(10) On the driver side only, reinstall the front seat and seat track to the floor panel as a unit. (Refer to 23 - BODY/SEATS/SEAT - FRONT - INSTALLATION).

(11) For the driver side only, do not reconnect the battery negative cable at this time. The supplemental restraint system verification test procedure should be performed following service of any supplemental restraint system component. (Refer to 8 - ELECTRICAL/RESTRAINTS - STANDARD PROCEDURE - VERIFICATION TEST).

REAR

WARNING: To avoid personal injury or death, during and following any seat belt or child restraint anchor service, carefully inspect all seat belts, buckles, mounting hardware, retractors, tether straps, and anchors for proper installation, operation, or damage. Replace any belt that is cut, frayed, or torn. Straighten any belt that is twisted. Tighten any loose fasteners. Replace any belt that has a damaged or inoperative buckle or retractor. Replace any belt that has a bent or damaged latch plate or anchor plate. Replace any child restraint anchor or the unit to which the anchor is integral that has been bent or damaged. Never attempt to repair a seat belt or child restraint component. Always replace damaged or faulty seat belt and child restraint components with the correct, new and unused replacement parts listed in the DaimlerChrysler Mopar Parts Catalog.

(1) Unlatch the rear seat back and fold it forward far enough to access the mounting location for the rear seat belt buckle anchor to the rear floor panel between the rear seat back and the rear seat cushion.

(2) Position the rear seat belt buckle and anchor between the rear seat back and the rear seat cushion as a unit (Fig. 44).

(3) Lower the rear seat belt buckle anchor over the stud on the rear floor panel.

(4) Install and tighten the screw that secures the rear seat belt buckle anchor to the rear floor panel. Tighten the screw to 43 N·m (32 ft. lbs.).

SEAT BELT & RETRACTOR

REMOVAL

FRONT

WARNING: To avoid personal injury or death, on vehicles equipped with airbags, disable the supplemental restraint system before attempting any steering wheel, steering column, airbag, occupant classification system, seat belt tensioner, impact sensor, or instrument panel component diagnosis or service. Disconnect and isolate the battery negative (ground) cable, then wait two minutes for the system capacitor to discharge before performing further diagnosis or service. This is the only sure way to disable the supplemental restraint system. Failure to take the proper precautions could result in accidental airbag deployment.

WARNING: To avoid personal injury or death, during and following any seat belt or child restraint anchor service, carefully inspect all seat belts, buckles, mounting hardware, retractors, tether straps, and anchors for proper installation, operation, or damage. Replace any belt that is cut, frayed, or torn. Straighten any belt that is twisted. Tighten any loose fasteners. Replace any belt that has a damaged or inoperative buckle or retractor. Replace any belt that has a bent or damaged latch plate or anchor plate. Replace any child restraint anchor or the unit to which the anchor is integral that has been bent or damaged. Never attempt to repair a seat belt or child restraint component. Always replace damaged or faulty seat belt and child restraint components with the correct, new and unused replacement parts listed in the DaimlerChrysler Mopar Parts Catalog.

SEAT BELT & RETRACTOR (Continued)

NOTE: On vehicles equipped with the Occupant Classification System (OCS), the passenger side front seat belt and retractor unit includes a belt tension sensor that is integral to the lower seat belt anchor, which is secured to the outboard side of the passenger side front seat cushion frame. Any time any OCS component is removed or replaced for any reason, the OCM must be re-calibrated using a diagnostic scan tool, the Occupant Classification Seat Weight special tool, and the Occupant Classification System Verification Test. Refer to the appropriate diagnostic procedures.

NOTE: The following procedure is for replacement of a faulty or damaged seat belt and retractor unit. The front retractor also includes a seat belt tensioner. If the front seat belt or retractor is faulty or damaged, but the seat belt tensioner is not deployed, review the recommended procedures for handling non-deployed supplemental restraints. (Refer to 8 - ELECTRICAL/RESTRAINTS - STANDARD PROCEDURE - HANDLING NON-DEPLOYED SUPPLEMENTAL RESTRAINTS). If the seat belt tensioner has been deployed, review the recommended procedures for service after a supplemental restraint deployment before removing the unit from the vehicle. (Refer to 8 - ELECTRICAL/RESTRAINTS - STANDARD PROCEDURE - SERVICE AFTER A SUPPLEMENTAL RESTRAINT DEPLOYMENT).

(1) Adjust the front seat to its most forward position for easiest access to the front seat belt lower anchor and the B-pillar trim.

(2) Disconnect and isolate the battery negative cable. Wait two minutes for the system capacitor to discharge before further service.

(3) Using a trim stick or another suitable wide flat-bladed tool, gently pry the seat belt anchor cover to remove it from the rear of the outboard seat side shield (Fig. 45).

(4) On the passenger side only if the vehicle is equipped with the Occupant Classification System, disconnect the belt tension sensor pigtail wire connector from the seat wire harness connector.

(5) Remove the screw that secures the lower anchor/belt tension sensor to the bracket on the outboard side of the front seat cushion frame.

(6) Unsnap and lift the trim cover to access the nut that secures the front seat belt turning loop to the height adjuster on the upper B-pillar (Fig. 46).

(7) Remove the nut that secures the seat belt turning loop to the height adjuster stud on the upper B-pillar.

(8) Remove the seat belt turning loop from the height adjuster stud.

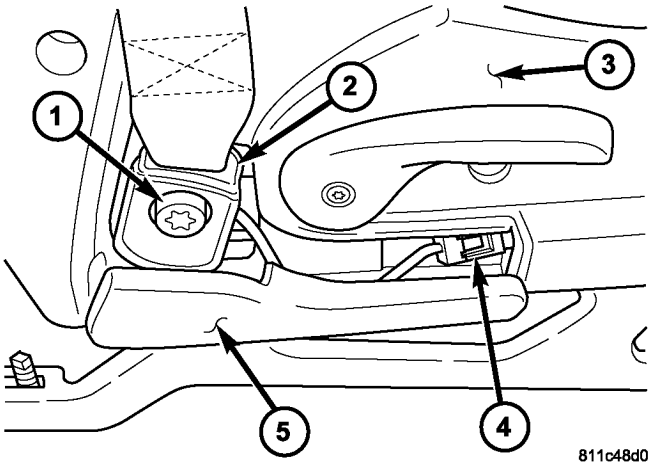

Fig. 45 Front Seat Belt Lower Anchor Remove/ Install

1 - SCREW
2 - LOWER ANCHOR/BELT TENSION SENSOR
3 - SIDE SHIELD
4 - PIGTAIL WIRE CONNECTOR
5 - COVER

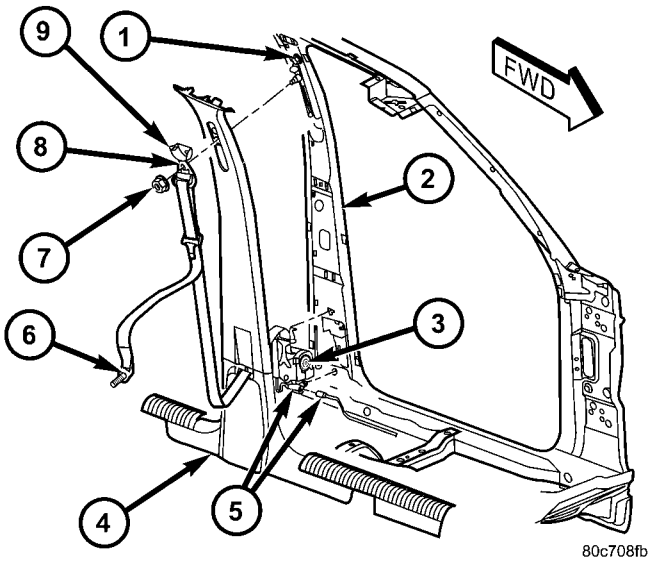

Fig. 46 Front Seat Belt Retractor Remove/Install

1 - ADJUSTER
2 - B-PILLAR
3 - RETRACTOR
4 - B-PILLAR TRIM
5 - CONNECTOR (DRIVER SIDE ONLY)
6 - LOWER ANCHOR
7 - NUT
8 - TURNING LOOP
9 - COVER

(9) Remove the upper trim from the inside of the B-pillar. (Refer to 23 - BODY/INTERIOR/B-PILLAR UPPER TRIM - REMOVAL).

SEAT BELT & RETRACTOR (Continued)

(10) Remove the lower trim from the inside of the B-pillar. (Refer to 23 - BODY/INTERIOR/B-PILLAR LOWER TRIM - REMOVAL).

(11) Disconnect the body wire harness connector from the seat belt tensioner pigtail wire connector.

(12) Remove the screw that secures the lower retractor bracket to the B-pillar.

(13) Disengage the engagement tab on the upper retractor bracket/seat belt web guide from the engagement slot in the B-pillar.

(14) Remove the front seat belt and retractor from the B-pillar as a unit.

REAR CENTER

WARNING: To avoid personal injury or death, during and following any seat belt or child restraint anchor service, carefully inspect all seat belts, buckles, mounting hardware, retractors, tether straps, and anchors for proper installation, operation, or damage. Replace any belt that is cut, frayed, or torn. Straighten any belt that is twisted. Tighten any loose fasteners. Replace any belt that has a damaged or inoperative buckle or retractor. Replace any belt that has a bent or damaged latch plate or anchor plate. Replace any child restraint anchor or the unit to which the anchor is integral that has been bent or damaged. Never attempt to repair a seat belt or child restraint component. Always replace damaged or faulty seat belt and child restraint components with the correct, new and unused replacement parts listed in the DaimlerChrysler Mopar Parts Catalog.

(1) Remove the right center seat belt buckle unit from the floor panel. (Refer to 8 - ELECTRICAL/RESTRAINTS/REAR SEAT BELT BUCKLE - REMOVAL).

(2) Unlatch and fold the right rear seat back forward and separate the cargo area carpet from the base of the seat back panel.

(3) Reach between the base of the right rear seat back and the forward edge of the rear cargo floor to access and remove the screw that secures the rear center seat belt lower anchor to the floor panel (Fig. 47).

(4) Lift the rear center seat belt lower anchor off of the stud on the rear floor panel.

(5) Remove the two screws that secure the belt web guide to the top of the right rear seat back panel.

(6) Remove the right rear seat back panel from the vehicle. (Refer to 23 - BODY/SEATS/SEAT BACK - REAR - REMOVAL).

(7) Remove the two screws that secure the belt web guide to the top of the right rear seat back panel.

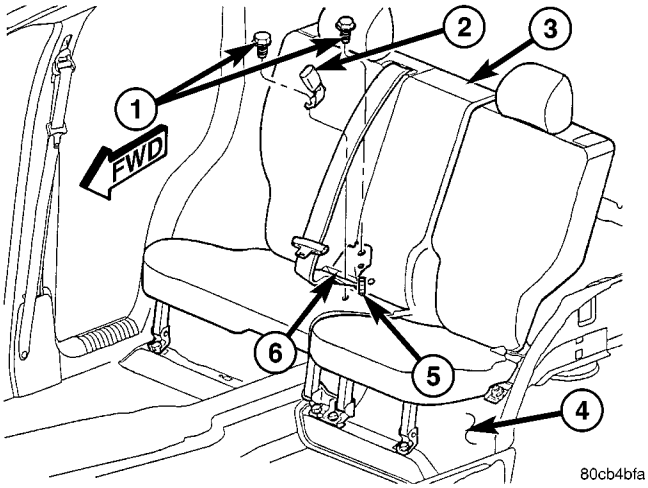

Fig. 47 Rear Center Seat Belt Anchor Plate Remove/Install

1 - SCREW (2)
2 - BUCKLE UNIT
3 - REAR SEAT BACK
4 - REAR FLOOR PANEL
5 - STUD (1)
6 - ANCHOR PLATE

(8) Remove the trim from the right rear seat back. (Refer to 23 - BODY/SEATS/SEAT BACK COVER - REAR - REMOVAL).

(9) Route the rear seat belt lower anchor and belt web guide through the top of the seat back panel.

(10) Disengage the seat back latch cable fitting from the cable support on the retractor, which is a light snap fit (Fig. 48).

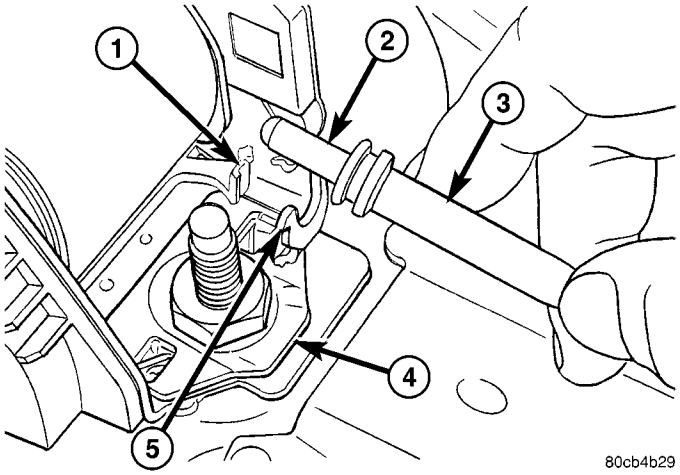

Fig. 48 Seat Back Latch Cable Disengage/Engage

1 - LEVER
2 - PLUNGER
3 - LATCH CABLE FITTING
4 - REAR CENTER RETRACTOR
5 - SUPPORT

(11) Remove the screw that secures the retractor to the rear seat back panel (Fig. 49).

SEAT BELT & RETRACTOR (Continued)

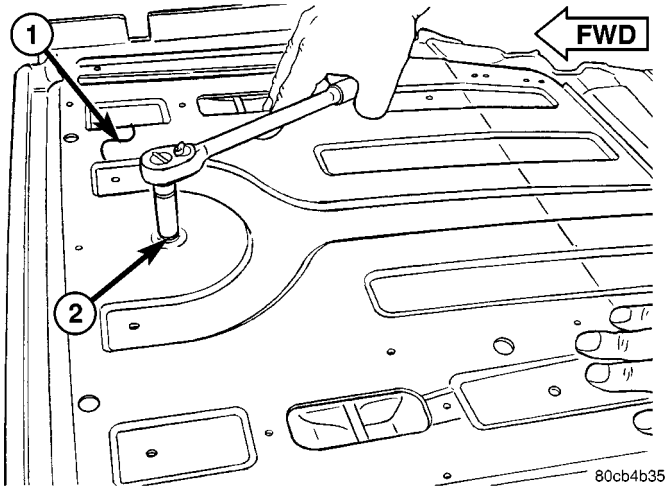

Fig. 49 Rear Center Retractor Remove/Install

1 - REAR SEAT BACK PANEL
2 - SCREW (1)

(12) Remove the rear center seat belt and retractor unit from the seat back panel.

REAR OUTBOARD

WARNING: To avoid personal injury or death, during and following any seat belt or child restraint anchor service, carefully inspect all seat belts, buckles, mounting hardware, retractors, tether straps, and anchors for proper installation, operation, or damage. Replace any belt that is cut, frayed, or torn. Straighten any belt that is twisted. Tighten any loose fasteners. Replace any belt that has a damaged or inoperative buckle or retractor. Replace any belt that has a bent or damaged latch plate or anchor plate. Replace any child restraint anchor or the unit to which the anchor is integral that has been bent or damaged. Never attempt to repair a seat belt or child restraint component. Always replace damaged or faulty seat belt and child restraint components with the correct, new and unused replacement parts listed in the DaimlerChrysler Mopar Parts Catalog.

(1) Unsnap and lift the trim cover to access the screw that secures the rear outboard seat belt turning loop to the upper C-pillar (Fig. 50).

(2) Remove the screw that secures the seat belt turning loop to the upper C-pillar.

(3) Remove the screw that secures the lower seat belt anchor to the bracket on the outboard side of the rear seat cushion frame.

(4) Remove the quarter trim panel from the C-pillar. (Refer to 23 - BODY/INTERIOR/QUARTER TRIM PANEL - REMOVAL).

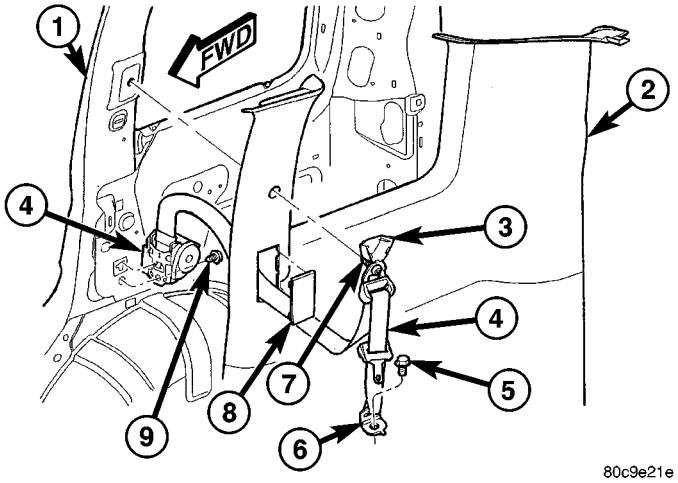

Fig. 50 Rear Outboard Seat Belt & Retractor Remove/Install

1 - C-PILLAR
2 - QUARTER TRIM PANEL
3 - COVER
4 - SEAT BELT & RETRACTOR
5 - SCREW (1)
6 - LOWER ANCHOR
7 - SCREW (1)
8 - ACCESS COVER
9 - SCREW (1)

(5) Route the seat belt lower anchor and turning loop through the access hole in the quarter trim panel.

(6) Remove the screw that secures the retractor bracket to the lower C-pillar.

(7) Lift the retractor upward far enough to disengage the retractor tab from the engagement hole in the lower C-pillar.

(8) Remove the rear outboard seat belt and retractor from the C-pillar as a unit.

INSTALLATION

FRONT

WARNING: To avoid personal injury or death, on vehicles equipped with airbags, disable the supplemental restraint system before attempting any steering wheel, steering column, airbag, occupant classification system, seat belt tensioner, impact sensor, or instrument panel component diagnosis or service. Disconnect and isolate the battery negative (ground) cable, then wait two minutes for the system capacitor to discharge before performing further diagnosis or service. This is the only sure way to disable the supplemental restraint system. Failure to take the proper precautions could result in accidental airbag deployment.

SEAT BELT & RETRACTOR (Continued)

WARNING: To avoid personal injury or death, during and following any seat belt or child restraint anchor service, carefully inspect all seat belts, buckles, mounting hardware, retractors, tether straps, and anchors for proper installation, operation, or damage. Replace any belt that is cut, frayed, or torn. Straighten any belt that is twisted. Tighten any loose fasteners. Replace any belt that has a damaged or inoperative buckle or retractor. Replace any belt that has a bent or damaged latch plate or anchor plate. Replace any child restraint anchor or the unit to which the anchor is integral that has been bent or damaged. Never attempt to repair a seat belt or child restraint component. Always replace damaged or faulty seat belt and child restraint components with the correct, new and unused replacement parts listed in the DaimlerChrysler Mopar Parts Catalog.

NOTE: On vehicles equipped with the Occupant Classification System (OCS), the passenger side front seat belt and retractor unit includes a belt tension sensor that is integral to the lower seat belt anchor, which is secured to the outboard side of the passenger side front seat cushion frame. Any time any OCS component is removed or replaced for any reason, the OCM must be re-calibrated using a diagnostic scan tool, the Occupant Classification Seat Weight special tool, and the Occupant Classification System Verification Test. Refer to the appropriate diagnostic procedures.

NOTE: The following procedure is for replacement of a faulty or damaged seat belt and retractor unit. The front retractor also includes a seat belt tensioner. If the front seat belt or retractor is faulty or damaged, but the seat belt tensioner is not deployed, review the recommended procedures for handling non-deployed supplemental restraints. (Refer to 8 - ELECTRICAL/RESTRAINTS - STANDARD PROCEDURE - HANDLING NON-DEPLOYED SUPPLEMENTAL RESTRAINTS). If the seat belt tensioner has been deployed, review the recommended procedures for service after a supplemental restraint deployment before removing the unit from the vehicle. (Refer to 8 - ELECTRICAL/RESTRAINTS - STANDARD PROCEDURE - SERVICE AFTER A SUPPLEMENTAL RESTRAINT DEPLOYMENT).

(1) Position the front seat belt and retractor to the B-pillar as a unit (Fig. 46). Be certain to engage the engagement tab on the upper retractor bracket/seat belt web guide into the engagement slot in the lower B-pillar.

(2) Install and tighten the screw that secures the lower retractor bracket to the B-pillar. Tighten the screw to 43 N·m (32 ft. lbs.).

(3) Reconnect the body wire harness connector to the seat belt tensioner pigtail wire connector.

(4) Reinstall the lower trim onto the inside of the B-pillar. (Refer to 23 - BODY/INTERIOR/B-PILLAR LOWER TRIM - INSTALLATION).

(5) Reinstall the upper trim onto the inside of the B-pillar. (Refer to 23 - BODY/INTERIOR/B-PILLAR UPPER TRIM - INSTALLATION).

(6) Position the seat belt turning loop onto the height adjuster stud on the upper B-pillar.

(7) Install and tighten the nut that secures the seat belt turning loop to the height adjuster stud. Tighten the nut to 34 N·m (25 ft. lbs.).

(8) Fold and snap the trim cover back into place to conceal the nut that secures the turning loop to the height adjuster.

(9) Position the front seat belt lower anchor/belt tension sensor to the bracket on the outboard side of the front seat cushion frame (Fig. 45).

(10) Install and tighten the screw that secures the lower anchor/belt tension sensor to the bracket on the outboard side of the front seat cushion frame. Tighten the screw to 47 N·m (35 ft. lbs.).

(11) On the passenger side only if the vehicle is equipped with the Occupant Classification System, reconnect the belt tension sensor pigtail wire connector to the seat wire harness connector for the sensor.

(12) Align the seat belt anchor cover to the opening near the rear of the outboard seat side shield. Using hand pressure, press firmly and evenly on the cover until it snaps into place.

(13) Do not reconnect the battery negative cable at this time. The supplemental restraint system verification test procedure should be performed following service of any supplemental restraint system component. (Refer to 8 - ELECTRICAL/RESTRAINTS - STANDARD PROCEDURE - VERIFICATION TEST).

(14) On the passenger side front seat belt and retractor only if the vehicle is equipped with the Occupant Classification System, following successful completion of the supplemental restraint system verification test procedure, perform the Occupant Classification System Verification Test using a diagnostic scan tool and the Occupant Classification Seat Weight special tool. Refer to the appropriate diagnostic procedures.

SEAT BELT & RETRACTOR (Continued)

REAR CENTER

WARNING: To avoid personal injury or death, during and following any seat belt or child restraint anchor service, carefully inspect all seat belts, buckles, mounting hardware, retractors, tether straps, and anchors for proper installation, operation, or damage. Replace any belt that is cut, frayed, or torn. Straighten any belt that is twisted. Tighten any loose fasteners. Replace any belt that has a damaged or inoperative buckle or retractor. Replace any belt that has a bent or damaged latch plate or anchor plate. Replace any child restraint anchor or the unit to which the anchor is integral that has been bent or damaged. Never attempt to repair a seat belt or child restraint component. Always replace damaged or faulty seat belt and child restraint components with the correct, new and unused replacement parts listed in the DaimlerChrysler Mopar Parts Catalog.

(1) Position the rear center seat belt and retractor unit onto the seat back panel.

(2) Install and tighten the screw that secures the retractor to the rear seat back panel (Fig. 49). Tighten the screw to 27 N·m (20 ft. lbs.).

(3) Position the seat back latch cable plunger against the retractor latch lever, then engage the cable fitting into the cable support on the retractor, which is a light snap fit (Fig. 48).

(4) Route the rear seat belt lower anchor and belt web guide through the top of the seat back panel.

(5) Reinstall the trim onto the right rear seat back. (Refer to 23 - BODY/SEATS/SEAT BACK COVER - REAR - INSTALLATION).

(6) Install and tighten the two screws that secure the belt web guide to the top of the right rear seat back panel. Tighten the screws to 2 N·m (20 in. lbs.).

(7) Reinstall the right rear seat back panel into the vehicle. (Refer to 23 - BODY/SEATS/SEAT BACK - REAR - INSTALLATION).

(8) Position the rear center seat belt lower anchor onto the stud on the rear floor panel (Fig. 47).

(9) Reach between the base of the right rear seat back and the forward edge of the rear cargo floor to install and tighten the screw that secures the rear center seat belt lower anchor to the floor panel. Tighten the screw to 43 N·m (32 ft. lbs.).

(10) Restore the cargo area carpet to the base of the seat back panel and unfold the right rear seat back to its upright position.

(11) Reinstall the right center seat belt buckle unit onto the floor panel. (Refer to 8 - ELECTRICAL/RESTRAINTS/SEAT BELT BUCKLE - INSTALLATION).

REAR OUTBOARD

WARNING: To avoid personal injury or death, during and following any seat belt or child restraint anchor service, carefully inspect all seat belts, buckles, mounting hardware, retractors, tether straps, and anchors for proper installation, operation, or damage. Replace any belt that is cut, frayed, or torn. Straighten any belt that is twisted. Tighten any loose fasteners. Replace any belt that has a damaged or inoperative buckle or retractor. Replace any belt that has a bent or damaged latch plate or anchor plate. Replace any child restraint anchor or the unit to which the anchor is integral that has been bent or damaged. Never attempt to repair a seat belt or child restraint component. Always replace damaged or faulty seat belt and child restraint components with the correct, new and unused replacement parts listed in the DaimlerChrysler Mopar Parts Catalog.

(1) Position the rear outboard seat belt and retractor to the C-pillar as a unit (Fig. 50).

(2) Engage the retractor tab into the engagement hole in the lower C-pillar.

(3) Install and tighten the screw that secures the retractor bracket to the lower C-pillar. Tighten the screw to 43 N·m (32 ft. lbs.).

(4) Route the seat belt lower anchor and turning loop through the access hole in the quarter trim panel.

(5) Reinstall the quarter trim panel onto the C-pillar. (Refer to 23 - BODY/INTERIOR/QUARTER TRIM PANEL - INSTALLATION).

(6) Position the lower seat belt anchor to the bracket on the outboard side of the rear seat cushion frame. Be certain that the anti-rotation tab on the anchor is engaged in the slot in the seat bracket.

(7) Install and tighten the screw that secures the lower seat belt anchor to the bracket on the outboard side of the rear seat cushion frame. Tighten the screw to 43 N·m (32 ft. lbs.).

(8) Position the seat belt turning loop to the upper C-pillar.

(9) Install and tighten the screw that secures the seat belt turning loop to the upper C-pillar. Tighten the screw to 43 N·m (32 ft. lbs.).

(10) Fold and snap the trim cover back into place to conceal the screw that secures the rear outboard seat belt turning loop to the upper C-pillar.

SEAT BELT SWITCH

DESCRIPTION

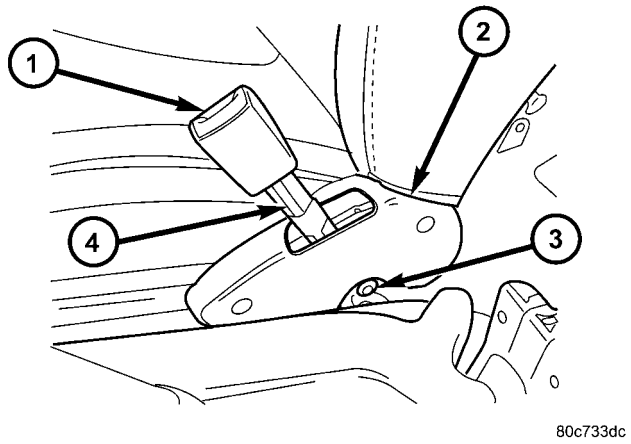

Fig. 51 Front Seat Belt Buckle

1 - FRONT SEAT BELT BUCKLE
2 - INBOARD SIDE SHIELD
3 - SCREW
4 - PIGTAIL WIRE

The seat belt switch for this model is actually a Hall Effect-type sensor. This sensor consists of a fixed-position, Hall Effect Integrated Circuit (IC) chip and a small permanent magnet that are integral to the driver side front seat belt buckle. The driver side front seat belt buckle is located on a stamped steel stanchion and secured with a screw to the inboard side of the driver side front seat cushion frame between the seat and the floor panel transmission tunnel (Fig. 51).

The seat belt switch is connected to the vehicle electrical system through a two-lead pigtail wire and connector on the driver side front seat belt buckle-half, which is connected to a wire harness connector and take out of the seat wire harness beneath the rear edge of the driver side front seat cushion frame. A radio noise suppression capacitor is connected in parallel with the IC where the two pigtail wire leads connect to the IC pins.

The seat belt switch cannot be adjusted or repaired and, if faulty or damaged, the entire driver side front seat belt buckle-half unit must be replaced.

OPERATION

The seat belt switch is designed to provide a status signal to the seat belt switch sense input of the Airbag Control Module (ACM) indicating whether the driver side front seat belt is fastened. The ACM sends electronic messages to the ElectroMechanical Instrument Cluster (EMIC) to control the seat belt indicator based upon the status of the driver side front seat belt switch.

A spring-loaded plastic slide with a small, enclosed permanent magnet is integral to the buckle latch mechanism. When a seat belt tip-half is inserted and latched into the seat belt buckle, the slide is pushed downward and into close proximity of the Hall Effect Integrated Circuit (IC) chip within the buckle. The field of the permanent magnet induces a current within the chip. The chip provides this induced current as an output to the ACM, which monitors the current to determine the status of the driver side front seat belt. When the seat belt is unbuckled, the spring-loaded slide and permanent magnet move upward and away from the IC, causing the output current from the seat belt switch to be reduced.

The seat belt switch receives a supply of current from the ACM, and the ACM senses the status of the driver side front seat belt through its pigtail wire connection to the seat wire harness. The ACM also monitors the condition of the seat belt switch circuit and will illuminate the airbag indicator in the EMIC, then store a Diagnostic Trouble Code (DTC) for any fault that is detected in the seat belt switch circuit. For proper diagnosis of the seat belt switch, a diagnostic scan tool is required. Refer to the appropriate diagnostic information.

SEAT BELT TENSIONER

DESCRIPTION

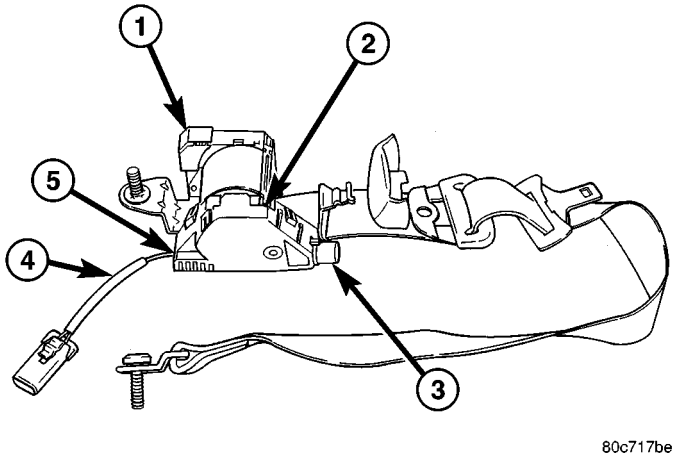

Fig. 52 Seat Belt Tensioner

1 - RETRACTOR
2 - TENSIONER HOUSING
3 - PISTON HOUSING
4 - PIGTAIL WIRE
5 - GAS GENERATOR

A seat belt tensioners supplement the dual front airbag system for all versions of this model (Fig. 52).

SEAT BELT TENSIONER (Continued)

The seat belt tensioners are integral to the front seat belt and retractor units, which are secured to the B-pillars on the right and left sides of the vehicle. The retractors are concealed beneath the molded plastic B-pillar trim.

The seat belt tensioner consists primarily of a molded plastic tensioner housing, a tubular metal piston housing, a piston, a short rack gear, a set of pinion gears, a pyrotechnically activated gas generator, and a short pigtail wire. All of these components are located on one side of the retractor spool on the outside of the retractor housing. The seat belt tensioners are controlled by the Airbag Control Module (ACM) and are connected to the vehicle electrical system through dedicated take outs of the body wire harness by keyed and latching molded plastic connector insulators to ensure a secure connection.

The seat belt tensioners cannot be repaired and, if faulty or damaged, the entire front seat belt and retractor unit must be replaced. The seat belt tensioners are not intended for reuse and must be replaced following any front airbag deployment. A locked retractor that will not allow the seat belt webbing to be retracted or extracted is a sure indication that the seat belt tensioner has been deployed and requires replacement. (Refer to 8 - ELECTRICAL/ RESTRAINTS/FRONT SEAT BELT & RETRACTOR - REMOVAL).

OPERATION

The seat belt tensioners are deployed by a signal generated by the Airbag Control Module (ACM) through the driver or passenger seat belt tensioner line 1 and line 2 (or squib) circuits. When the ACM sends the proper electrical signal to the tensioners, the electrical energy generates enough heat to initiate a small pyrotechnic gas generator. The gas generator is installed in one end of the tubular metal piston housing, which contains a piston and a small rack gear. As the gas expands, it pushes the piston and the rack gear through the tube. The rack gear engages a pinion gear that drives a gear set in the tensioner housing, which rotates the seat belt retractor spool causing the slack to be removed from the front seat belts.

Removing excess slack from the front seat belts not only keeps the occupants properly positioned for an airbag deployment following a frontal impact of the vehicle, but also helps to reduce injuries that the occupants of the front seat might experience in these situations as a result of a harmful contact with the steering wheel, steering column, instrument panel and/or windshield. Also, the seat belt retractor has a torsion bar mechanism that is designed to deform in order to control the loading being applied to the occupants by the seat belts during a frontal impact, further reducing the potential for occupant injuries.

The ACM monitors the condition of the seat belt tensioners through circuit resistance, and will illuminate the airbag indicator in the ElectroMechanical Instrument Cluster (EMIC) and store a Diagnostic Trouble Code (DTC) for any fault that is detected. For proper diagnosis of the seat belt tensioners, a diagnostic scan tool is required. Refer to the appropriate diagnostic information.

SEAT BELT TURNING LOOP ADJUSTER

REMOVAL

WARNING: To avoid personal injury or death, on vehicles equipped with airbags, disable the supplemental restraint system before attempting any steering wheel, steering column, airbag, occupant classification system, seat belt tensioner, impact sensor, or instrument panel component diagnosis or service. Disconnect and isolate the battery negative (ground) cable, then wait two minutes for the system capacitor to discharge before performing further diagnosis or service. This is the only sure way to disable the supplemental restraint system. Failure to take the proper precautions could result in accidental airbag deployment.

WARNING: To avoid personal injury or death, during and following any seat belt or child restraint anchor service, carefully inspect all seat belts, buckles, mounting hardware, retractors, tether straps, and anchors for proper installation, operation, or damage. Replace any belt that is cut, frayed, or torn. Straighten any belt that is twisted. Tighten any loose fasteners. Replace any belt that has a damaged or inoperative buckle or retractor. Replace any belt that has a bent or damaged latch plate or anchor plate. Replace any child restraint anchor or the unit to which the anchor is integral that has been bent or damaged. Never attempt to repair a seat belt or child restraint component. Always replace damaged or faulty seat belt and child restraint components with the correct, new and unused replacement parts listed in the DaimlerChrysler Mopar Parts Catalog.

(1) Disconnect and isolate the battery negative cable. Wait two minutes for the system capacitor to discharge before further service.

(2) Unsnap and lift the trim cover to access the nut that secures the front seat belt turning loop to the height adjuster on the upper B-pillar.

SEAT BELT TURNING LOOP ADJUSTER (Continued)

(3) Remove the nut that secures the seat belt turning loop to the height adjuster stud on the upper B-pillar.

(4) Remove the seat belt turning loop from the height adjuster stud.

(5) Remove the upper trim from the inside of the B-pillar. (Refer to 23 - BODY/INTERIOR/B-PILLAR UPPER TRIM - REMOVAL).

(6) Remove the screw that secures the seat belt turning loop adjuster to the upper B-pillar (Fig. 53).

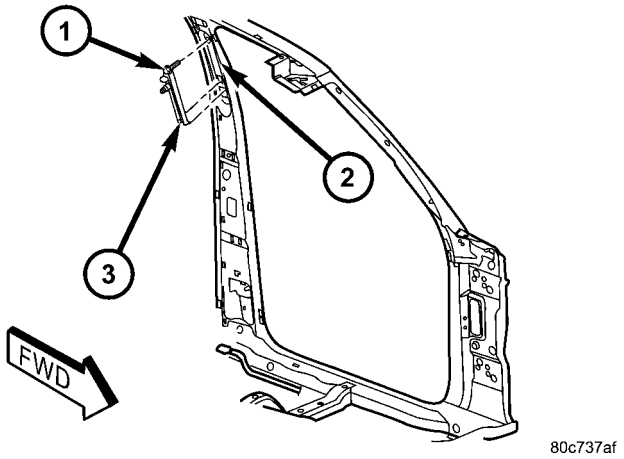

Fig. 53 Seat Belt Turning Loop Adjuster Remove/ Install

1 - SCREW
2 - B-PILLAR
3 - ADJUSTER

(7) Pull the upper end of the turning loop adjuster away from the B-pillar far enough to disengage the hooks on the lower end of the adjuster from the slots in the B-pillar.

(8) Remove the seat belt turning loop adjuster from the B-pillar.

INSTALLATION

WARNING: To avoid personal injury or death, on vehicles equipped with airbags, disable the supplemental restraint system before attempting any steering wheel, steering column, airbag, occupant classification system, seat belt tensioner, impact sensor, or instrument panel component diagnosis or service. Disconnect and isolate the battery negative (ground) cable, then wait two minutes for the system capacitor to discharge before performing further diagnosis or service. This is the only sure way to disable the supplemental restraint system. Failure to take the proper precautions could result in accidental airbag deployment.

WARNING: To avoid personal injury or death, during and following any seat belt or child restraint anchor service, carefully inspect all seat belts, buckles, mounting hardware, retractors, tether straps, and anchors for proper installation, operation, or damage. Replace any belt that is cut, frayed, or torn. Straighten any belt that is twisted. Tighten any loose fasteners. Replace any belt that has a damaged or inoperative buckle or retractor. Replace any belt that has a bent or damaged latch plate or anchor plate. Replace any child restraint anchor or the unit to which the anchor is integral that has been bent or damaged. Never attempt to repair a seat belt or child restraint component. Always replace damaged or faulty seat belt and child restraint components with the correct, new and unused replacement parts listed in the DaimlerChrysler Mopar Parts Catalog.

(1) Position the seat belt turning loop adjuster to the B-pillar (Fig. 53).

(2) Engage the hooks on the lower end of the adjuster into the slots in the B-pillar.

(3) Tilt the upper end of the turning loop adjuster up into position against the B-pillar.

(4) Install and tighten the screw that secures the seat belt turning loop adjuster to the upper B-pillar. Tighten the screw to 34 N·m (25 ft. lbs.).

(5) Reinstall the upper trim onto the inside of the B-pillar. (Refer to 23 - BODY/INTERIOR/B-PILLAR UPPER TRIM - INSTALLATION).

(6) Position the seat belt turning loop onto the height adjuster stud on the upper B-pillar.

(7) Install and tighten the nut that secures the seat belt turning loop to the height adjuster stud. Tighten the nut to 34 N·m (25 ft. lbs.).

(8) Fold and snap the trim cover back into place to conceal the nut that secures the front seat belt turning loop to the height adjuster on the upper B-pillar.

(9) Reconnect the battery negative cable.

SEAT WEIGHT SENSOR

DESCRIPTION

Vehicles equipped with the Occupant Classification System (OCS) have a seat weight bladder and pressure sensor unit that is integral to the passenger side front seat cushion. The bladder is sandwiched between the seat cushion springs and seat cushion foam. A heavy jute-like insulator pad is installed between the lower surface of the bladder and the seat cushion springs. The pad is secured to the underside of the bladder by diagonal straps that form pockets at each of the two rear corners of the bladder, while two plastic push-in fasteners locate and secure the forward edge of the bladder and the pad

SEAT WEIGHT SENSOR (Continued)

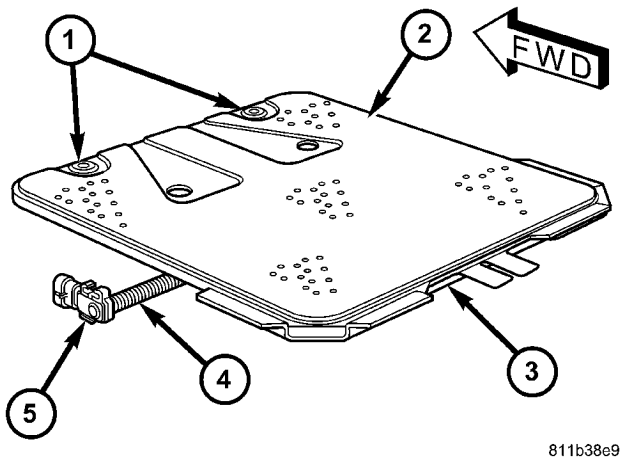

Fig. 54 Seat Weight Bladder & Pressure Sensor

1 - FASTENER (2)
2 - BLADDER
3 - PAD
4 - TUBE
5 - PRESSURE SENSOR

to the front edge of the seat cushion frame. The seat cushion foam is installed loosely over the top of the bladder, then secured by the installation of the trim cover to the seat cushion.

The bladder consists of two rectangular sheets of an elastomeric material and a molded plastic elbow fitting. The two sheets of material are sealed together around their perimeter and heat staked to each other at numerous regular points within their field. The elbow fitting is sealed to a small round hole in the lower surface of the bladder and is pointed downward where it passes through a clearance hole in the insulator pad and extends to just below the seat cushion springs. Then the bladder is filled with a silicone fluid to become a pliable, quilted membrane.

Under the seat cushion a short tube is securely clamped at one end to the bladder nipple, and at the other end to a nipple on the electronic pressure sensor. The pressure sensor is contained within a molded plastic housing with an integral nipple formation near one end and an integral electrical connector receptacle at the opposite end. The sensor housing also features an integral mount that snaps over a tab integral to the stamped steel Occupant Classification Module (OCM) mounting bracket welded to the underside of the passenger side front seat cushion frame. The pressure sensor connector receptacle contains terminal pins that connect the sensor to the vehicle electrical system and the OCM through a dedicated take out and connector of the passenger side front seat wire harness.

The seat weight bladder and pressure sensor cannot be adjusted or repaired. The components of the passenger side front seat cushion of a vehicle equipped with the OCS including the cushion frame, springs, insulator pad, seat weight bladder and pressure sensor, seat cushion foam, wire harness and the OCM are serviced only as a factory-calibrated, assembled and tamper-evident unit. Only the OCM and the seat cushion trim are available for separate service replacement. Once a service replacement package has been installed in a vehicle, the OCM can thereafter be serviced only by replacing the entire passenger side front seat cushion unit with another complete service replacement package.

OPERATION

The seat weight bladder and pressure sensor unit is designed to sense the relative weight of a load applied to the passenger side front seat cushion, which provides a logic input to the microprocessor of the Occupant Classification Module (OCM). When a load is applied to the seat cushion, fluid within the bladder becomes pressurized. These changes in bladder fluid pressure are measured by the pressure sensor under the seat cushion through the bladder tube. As the pressure within the bladder changes, the circuitry of the pressure sensor changes the output voltage of the sensor.

The pressure sensor receives a nominal five volts and a ground through dedicated hard wired circuits from the OCM. The OCM then monitors the pressure sensor output voltage on a dedicated hard wired data communication circuit. The hard wired circuits between the pressure sensor and the OCM may be diagnosed and tested using conventional diagnostic tools and procedures. However, the most reliable, efficient, and accurate means to diagnose the bladder and pressure sensor input to the OCM, and the electronic message communication between the OCM and the Airbag Control Module (ACM) requires the use of a diagnostic scan tool. Refer to the appropriate diagnostic information.

REMOVAL

If any of the Occupant Classification System (OCS) components of the passenger side front seat cushion require replacement, they are serviced only as a factory-calibrated, assembled, and tamper-evident service replacement package. This package includes the assembled frame, springs, pad, seat weight bladder and pressure sensor, foam, wiring and a calibrated OCM. When installing this package, always replace all of the existing components with the new components as a unit. Do not attempt to separate or disconnect any of the new OCS components contained in the service replacement package from each other, and do not attempt to reuse any of the replaced components in this or any other vehicle.

SEAT WEIGHT SENSOR (Continued)

Once any of the original factory-installed components except the OCM have been replaced with the service replacement package components, the OCM can only be serviced by replacing the entire passenger side front seat cushion unit with another complete service replacement package. Any time any one of these components is removed or replaced for any reason, the OCM must be re-calibrated using a diagnostic scan tool, the Occupant Classification Seat Weight special tool, and the Occupant Classification System Verification Test. Refer to the appropriate diagnostic procedures.

WARNING: To avoid personal injury or death, on vehicles equipped with airbags, disable the supplemental restraint system before attempting any steering wheel, steering column, airbag, occupant classification system, seat belt tensioner, impact sensor, or instrument panel component diagnosis or service. Disconnect and isolate the battery negative (ground) cable, then wait two minutes for the system capacitor to discharge before performing further diagnosis or service. This is the only sure way to disable the supplemental restraint system. Failure to take the proper precautions could result in accidental airbag deployment.

WARNING: To avoid personal injury or death on vehicles equipped with the Occupant Classification System (OCS), only the Occupant Classification Module (OCM) and the seat cushion trim may be serviced separately. All other components of the passenger side front seat cushion assembly must be serviced only as a complete factory-calibrated, assembled and tamper-evident service replacement package. This package includes the frame, springs, pad, bladder and pressure sensor, foam, wiring and a calibrated OCM. When installing this package always replace all of the existing components with the new components as a unit. Do not attempt to separate or disconnect any of the new OCS components in the service replacement package from each other, and do not attempt to reuse any of the replaced components in this or any other vehicle. Failure to take the proper precautions could result in failure of the passenger airbag to deploy when required, or in passenger airbag deployment when not required.

WARNING: To avoid personal injury or death on vehicles equipped with the Occupant Classification System (OCS), do not modify the front passenger seat assembly or center floor console in any way. Do not use any prior year, subsequent year, secondary or aftermarket seat trim covers. At no time should any Supplemental Restraint System (SRS) or OCS component be modified or replaced with any part except those which are specified for the particular vehicle application in the DaimlerChrysler Mopar Parts Catalog. Failure to observe these precautions could cause an OCS miscalibration condition, which may result in the passenger airbag failing to deploy when required or deploying when not required.

CAUTION: On vehicles equipped with the Occupant Classification System (OCS), never replace both the Airbag Control Module (ACM) and the Occupant Classification Module (OCM) at the same time. If both require replacement, replace one. Then perform the supplemental restraint verification test before replacing the other. Both the ACM and the OCM store OCS calibration data, which they transfer to one another when one of them is replaced. If both are replaced at the same time, an irreversible fault will be set in both modules.

(1) Disconnect and isolate the battery negative cable. Wait two minutes for the system capacitor to discharge before further service.

(2) Remove the passenger side front seat from the vehicle. (Refer to 23 - BODY/SEATS/SEAT - FRONT - REMOVAL).

(3) Remove the seat cushion assembly from the passenger side front seat. (Refer to 23 - BODY/SEATS/SEAT CUSHION - FRONT - REMOVAL).

(4) Remove the trim cover from the passenger side front seat cushion. (Refer to 23 - BODY/SEATS/SEAT CUSHION COVER - FRONT - REMOVAL).

(5) Discard the entire passenger side front seat cushion frame, springs, pad, bladder and pressure sensor, foam, wiring and Occupant Classification Module (OCM) and replace with the entire contents of the factory-calibrated, assembled and tamper-evident service replacement package.

INSTALLATION

If any of the Occupant Classification System (OCS) components of the passenger side front seat cushion require replacement, they are serviced only as a factory-calibrated, assembled, and tamper-evident service replacement package. This package includes the assembled frame, springs, pad, seat weight bladder and pressure sensor, foam, wiring and a calibrated OCM. When installing this package, always replace all of the existing components with the new components as a unit. Do not attempt to separate or disconnect any of the new OCS components contained in the service replacement package from each other, and do not attempt to reuse any of the replaced components in this or any other vehicle.

SEAT WEIGHT SENSOR (Continued)

Once any of the original factory-installed components except the OCM have been replaced with the service replacement package components, the OCM can only be serviced by replacing the entire passenger side front seat cushion unit with another complete service replacement package. Any time any one of these components is removed or replaced for any reason, the OCM must be re-calibrated using a diagnostic scan tool, the Occupant Classification Seat Weight special tool, and the Occupant Classification System Verification Test. Refer to the appropriate diagnostic procedures.

WARNING: To avoid personal injury or death, on vehicles equipped with airbags, disable the supplemental restraint system before attempting any steering wheel, steering column, airbag, occupant classification system, seat belt tensioner, impact sensor, or instrument panel component diagnosis or service. Disconnect and isolate the battery negative (ground) cable, then wait two minutes for the system capacitor to discharge before performing further diagnosis or service. This is the only sure way to disable the supplemental restraint system. Failure to take the proper precautions could result in accidental airbag deployment.

WARNING: To avoid personal injury or death on vehicles equipped with the Occupant Classification System (OCS), only the Occupant Classification Module (OCM) and the seat cushion trim may be serviced separately. All other components of the passenger side front seat cushion assembly must be serviced only as a complete factory-calibrated, assembled and tamper-evident service replacement package. This package includes the frame, springs, pad, bladder and pressure sensor, foam, wiring and a calibrated OCM. When installing this package always replace all of the existing components with the new components as a unit. Do not attempt to separate or disconnect any of the new OCS components in the service replacement package from each other, and do not attempt to reuse any of the replaced components in this or any other vehicle. Failure to take the proper precautions could result in failure of the passenger airbag to deploy when required, or in passenger airbag deployment when not required.

WARNING: To avoid personal injury or death on vehicles equipped with the Occupant Classification System (OCS), do not modify the front passenger seat assembly or center floor console in any way. Do not use any prior year, subsequent year, secondary or aftermarket seat trim covers. At no time should any Supplemental Restraint System (SRS) or OCS component be modified or replaced with any part except those which are specified for the particular vehicle application in the DaimlerChrysler Mopar Parts Catalog. Failure to observe these precautions could cause an OCS miscalibration condition, which may result in the passenger airbag failing to deploy when required or deploying when not required.

CAUTION: On vehicles equipped with the Occupant Classification System (OCS), never replace both the Airbag Control Module (ACM) and the Occupant Classification Module (OCM) at the same time. If both require replacement, replace one. Then perform the supplemental restraint verification test before replacing the other. Both the ACM and the OCM store OCS calibration data, which they transfer to one another when one of them is replaced. If both are replaced at the same time, an irreversible fault will be set in both modules.

(1) Discard the entire passenger side front seat cushion frame, springs, pad, bladder and pressure sensor, foam, wiring and Occupant Classification Module (OCM) and replace with the entire contents of the factory-calibrated, assembled and tamper-evident service replacement package.

(2) Reinstall the trim cover onto the passenger side front seat cushion. (Refer to 23 - BODY/SEATS/SEAT CUSHION COVER - FRONT - INSTALLATION).

(3) Reinstall the seat cushion assembly onto the passenger side front seat. (Refer to 23 - BODY/SEATS/SEAT CUSHION - FRONT - INSTALLATION).

(4) Reinstall the passenger side front seat into the vehicle. (Refer to 23 - BODY/SEATS/SEAT - FRONT - INSTALLATION).

(5) Do not reconnect the battery negative cable at this time. The supplemental restraint system verification test procedure should be performed following service of any supplemental restraint system component. (Refer to 8 - ELECTRICAL/RESTRAINTS - STANDARD PROCEDURE - VERIFICATION TEST).

(6) Following successful completion of the supplemental restraint system verification test procedure, perform the Occupant Classification System Verification Test using a diagnostic scan tool and the Occupant Classification Seat Weight special tool. Refer to the appropriate diagnostic procedures.

SPEED CONTROL

TABLE OF CONTENTS

page

SPEED CONTROL
DESCRIPTION 1
OPERATION 1
DIAGNOSIS AND TESTING - ROAD TEST 2
SPECIFICATIONS
TORQUE - SPEED CONTROL 2
CABLE
DESCRIPTION 3
OPERATION 3
REMOVAL - 3.7L 3
INSTALLATION - 3.7L 4
SERVO
DESCRIPTION 4
OPERATION 4
REMOVAL 4
INSTALLATION 5
SWITCH
DESCRIPTION 5
OPERATION 5
REMOVAL 6
INSTALLATION 6
VACUUM RESERVOIR
DESCRIPTION 6
OPERATION 6
DIAGNOSIS AND TESTING - VACUUM RESERVOIR 7
REMOVAL 7
INSTALLATION 8

SPEED CONTROL

DESCRIPTION

The speed control system is electronically controlled and vacuum operated. Electronic control of the speed control system is integrated into the Powertrain Control Module (PCM). The controls consist of two steering wheel mounted switches. The switches are labeled: ON/OFF, RES/ACCEL, SET, COAST, and CANCEL.

The system is designed to operate at speeds above 30 mph (50 km/h).

WARNING: THE USE OF SPEED CONTROL IS NOT RECOMMENDED WHEN DRIVING CONDITIONS DO NOT PERMIT MAINTAINING A CONSTANT SPEED, SUCH AS IN HEAVY TRAFFIC OR ON ROADS THAT ARE WINDING, ICY, SNOW COVERED, OR SLIPPERY.

OPERATION

When speed control is selected by depressing the ON switch, the PCM allows a set speed to be stored in PCM RAM for speed control. To store a set speed, depress the SET switch while the vehicle is moving at a speed between 35 and 85 mph. In order for the speed control to engage, the brakes cannot be applied, nor can the gear selector be indicating the transmission is in Park or Neutral.

The speed control can be disengaged manually by:

- Stepping on the brake pedal
- Depressing the OFF switch
- Depressing the CANCEL switch.
- Depressing the clutch pedal (if equipped).

NOTE: Depressing the OFF switch or turning off the ignition switch will erase the set speed stored in the PCM.

For added safety, the speed control system is programmed to disengage for any of the following conditions:

- An indication of Park or Neutral
- A rapid increase rpm (indicates that the clutch has been disengaged)
- Excessive engine rpm (indicates that the transmission may be in a low gear)
- The speed signal increases at a rate of 10 mph per second (indicates that the coefficient of friction between the road surface and tires is extremely low)
- The speed signal decreases at a rate of 10 mph per second (indicates that the vehicle may have decelerated at an extremely high rate)

Once the speed control has been disengaged, depressing the RES/ACCEL switch (when speed is greater than 30 mph) restores the vehicle to the target speed that was stored in the PCM.

While the speed control is engaged, the driver can increase the vehicle speed by depressing the RES/ACCEL switch. The new target speed is stored in the PCM when the RES/ACCEL is released. The PCM also has a ″tap-up″ feature in which vehicle speed increases at a rate of approximately 2 mph for each momentary switch activation of the RES/ACCEL switch.

SPEED CONTROL (Continued)

A “tap down” feature is used to decelerate without disengaging the speed control system. To decelerate from an existing recorded target speed, momentarily depress the COAST switch. For each switch activation, speed will be lowered approximately 1 mph.

OVERSHOOT/UNDERSHOOT

If the vehicle operator repeatedly presses and releases the SET button with their foot off of the accelerator (referred to as a “lift foot set”), the vehicle may accelerate and exceed the desired set speed by up to 5 mph (8 km/h). It may also decelerate to less than the desired set speed, before finally achieving the desired set speed.

The Speed Control System has an adaptive strategy that compensates for vehicle-to-vehicle variations in speed control cable lengths. When the speed control is set with the vehicle operators foot off of the accelerator pedal, the speed control thinks there is excessive speed control cable slack and adapts accordingly. If the “lift foot sets” are continually used, a speed control overshoot/undershoot condition will develop.

To “unlearn” the overshoot/undershoot condition, the vehicle operator has to press and release the set button while maintaining the desired set speed using the accelerator pedal (not decelerating or accelerating), and then turning the cruise control switch to the OFF position (or press the CANCEL button if equipped) after waiting 10 seconds. This procedure must be performed approximately 10–15 times to completely unlearn the overshoot/undershoot condition.

DIAGNOSIS AND TESTING - ROAD TEST

Perform a vehicle road test to verify reports of speed control system malfunction. The road test should include attention to the speedometer. Speedometer operation should be smooth and without flutter at all speeds.

Flutter in the speedometer indicates a problem which might cause surging in the speed control system. The cause of any speedometer problems should be corrected before proceeding. Refer to Group 8J, Instrument Cluster for speedometer diagnosis.

If a road test verifies a system problem and the speedometer operates properly, check for:

- A Diagnostic Trouble Code (DTC). If a DTC exists, conduct tests per the Powertrain Diagnostic Procedures service manual.
- A misadjusted brake (stop) lamp switch. This could also cause an intermittent problem.
- Loose, damaged or corroded electrical connections at the servo. Corrosion should be removed from electrical terminals and a light coating of Mopar MultiPurpose Grease, or equivalent, applied.
- Leaking vacuum reservoir.
- Loose or leaking vacuum hoses or connections.
- Defective one-way vacuum check valve.
- Secure attachment of both ends of the speed control servo cable.
- Smooth operation of throttle linkage and throttle body air valve.
- Failed speed control servo. Do the servo vacuum test.

CAUTION: When test probing for voltage or continuity at electrical connectors, care must be taken not to damage connector, terminals or seals. If these components are damaged, intermittent or complete system failure may occur.

SPECIFICATIONS

TORQUE - SPEED CONTROL

DESCRIPTION	N-m	Ft. Lbs.	In. Lbs.
Servo Mounting Bracket-to-Servo Nuts	9	-	75
Servo Mounting Bracket-to-Body Bolts	12	-	105
Speed Control Switch Mounting Screws	1.5	-	14
Vacuum Reservoir Mounting Screws	3	-	20

CABLE

DESCRIPTION

The speed control servo cable is connected between the speed control vacuum servo diaphragm and the throttle body control linkage.

OPERATION

This cable causes the throttle control linkage to open or close the throttle valve in response to movement of the vacuum servo diaphragm.

REMOVAL - 3.7L

(1) Disconnect negative battery cable at battery.

(2) Remove air filter resonator at throttle body.

The accelerator cable must be partially removed to gain access to speed control cable.

(3) Hold throttle in wide open position. While held in this position, slide throttle cable pin (Fig. 1) from throttle body bellcrank.

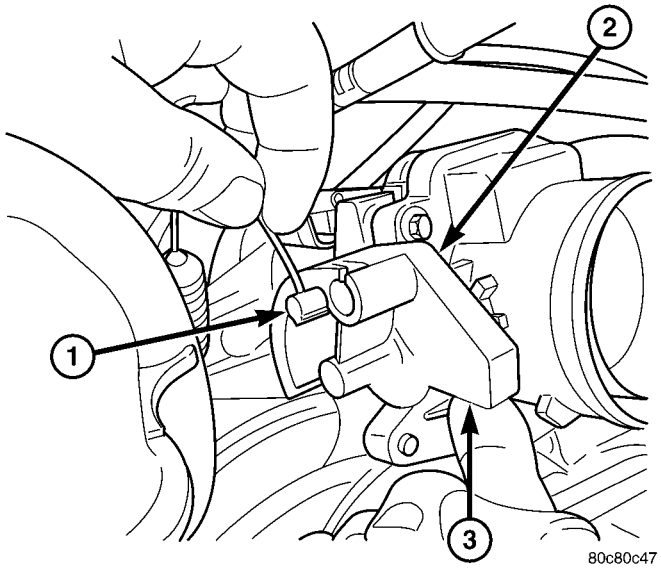

Fig. 1 THROTTLE CABLE PIN

1 - THROTTLE CABLE PIN
2 - THROTTLE BODY BELLCRANK
3 - PUSH UP HERE

(4) Using a pick or small screwdriver, press release tab (Fig. 2) to release plastic cable mount from bracket. **Press on tab only enough to release cable from bracket. If tab is pressed too much, it will be broken.** Slide plastic mount (Fig. 2) towards right side of vehicle to remove throttle cable from throttle body bracket.

(5) Using finger pressure only, disconnect servo cable connector (Fig. 3) at throttle body bellcrank pin by pushing connector off bellcrank pin towards front of vehicle. **DO NOT try to pull connector off perpendicular to the bellcrank pin. Connector will be broken.**

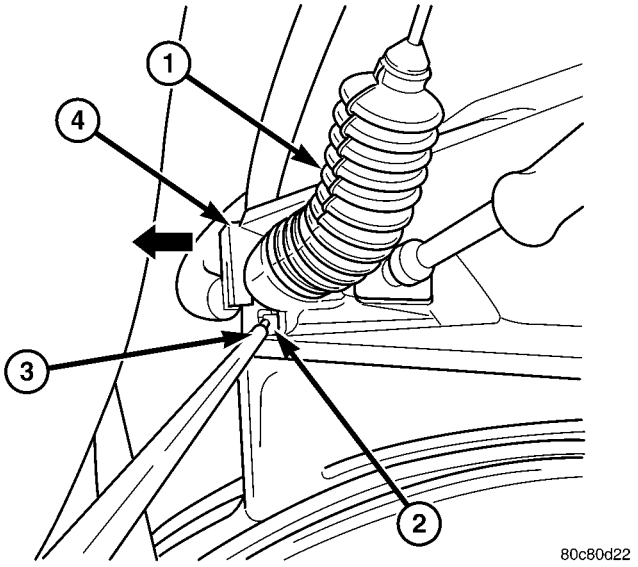

Fig. 2 THROTTLE CABLE RELEASE TAB

1 - THROTTLE CABLE
2 - RELEASE TAB
3 - PICK OR SCREWDRIVER
4 - PLASTIC CABLE MOUNT

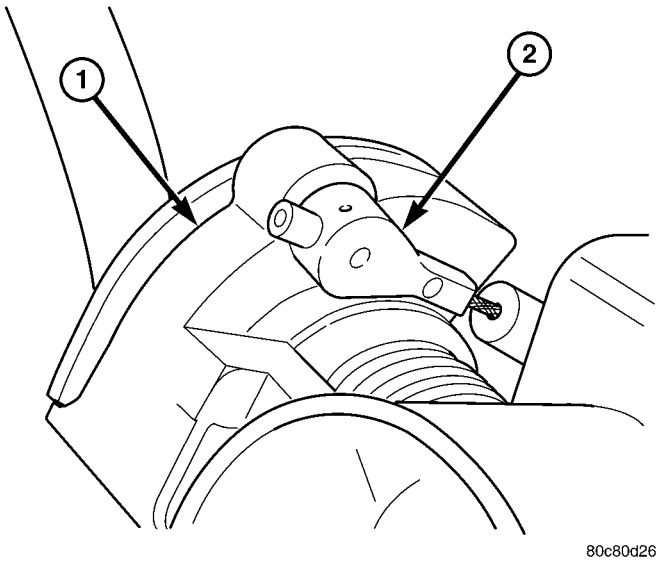

Fig. 3 SPEED CONTROL CABLE AT BELLCRANK

1 - THROTTLE BODY BELLCRANK
2 - SPEED CONTROL CABLE CONNECTOR

(6) Slide speed control cable plastic mount towards right of vehicle to remove cable from throttle body bracket (Fig. 4).

(7) Remove servo cable from servo. Refer to Servo Removal/Installation.

CABLE (Continued)

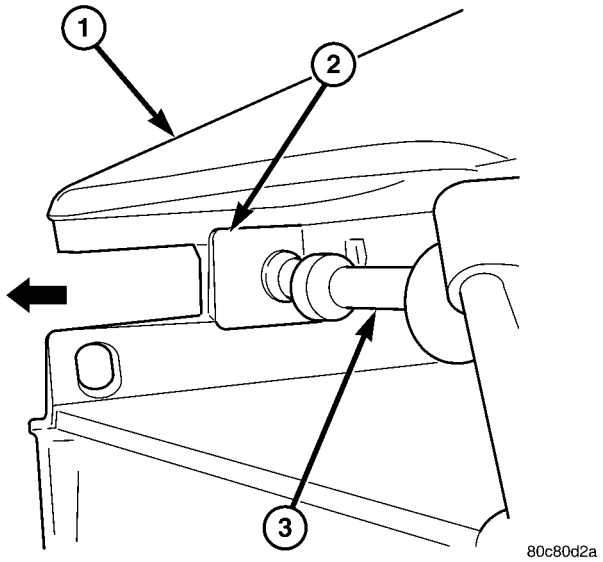

Fig. 4 SPEED CONTROL CABLE AT BRACKET

1 - THROTTLE CABLE BRACKET
2 - PLASTIC CABLE MOUNT
3 - SPEED CONTROL CABLE

INSTALLATION - 3.7L

(1) Install end of cable to speed control servo. Refer to Servo Removal/Installation.

(2) Slide speed control cable plastic mount into throttle body bracket.

(3) Install speed control cable connector onto throttle body bellcrank pin (push rearward to snap into location).

(4) Slide throttle (accelerator) cable plastic mount into throttle body bracket. Continue sliding until cable release tab is aligned to hole in throttle body mounting bracket.

(5) While holding throttle to wide open position, place throttle cable pin into throttle body bellcrank.

(6) Install air filter resonator box to throttle body.

(7) Connect negative battery cable at battery.

(8) Before starting engine, operate accelerator pedal to check for any binding.

SERVO

DESCRIPTION

The servo unit consists of a solenoid valve body, and a vacuum chamber. The solenoid valve body contains three solenoids:

- Vacuum
- Vent
- Dump

The vacuum chamber contains a diaphragm with a cable attached to control the throttle linkage.

OPERATION

The Powertrain Control Module (PCM) controls the solenoid valve body. The solenoid valve body controls the application and release of vacuum to the diaphragm of the vacuum servo. The servo unit cannot be repaired and is serviced only as a complete assembly.

Power is supplied to the servo's by the PCM through the brake switch. The PCM controls the ground path for the vacuum and vent solenoids.

The dump solenoid is energized anytime it receives power. If power to the dump solenoid is interrupted, the solenoid dumps vacuum in the servo. This provides a safety backup to the vent and vacuum solenoids.

The vacuum and vent solenoids must be grounded at the PCM to operate. When the PCM grounds the vacuum servo solenoid, the solenoid allows vacuum to enter the servo and pull open the throttle plate using the cable. When the PCM breaks the ground, the solenoid closes and no more vacuum is allowed to enter the servo. The PCM also operates the vent solenoid via ground. The vent solenoid opens and closes a passage to bleed or hold vacuum in the servo as required.

The PCM duty cycles the vacuum and vent solenoids to maintain the set speed, or to accelerate and decelerate the vehicle. To increase throttle opening, the PCM grounds the vacuum and vent solenoids. To decrease throttle opening, the PCM removes the grounds from the vacuum and vent solenoids. When the brake is released, if vehicle speed exceeds 30 mph to resume, 35 mph to set, and the RES/ACCEL switch has been depressed, ground for the vent and vacuum circuits is restored.

REMOVAL

(1) Disconnect negative battery cable at battery.

(2) Disconnect vacuum line at servo (Fig. 5).

(3) Disconnect electrical connector at servo (Fig. 5).

(4) Remove coolant bottle nuts/bolts. Position bottle forward a few inches.

(5) Disconnect servo cable at throttle body. Refer to servo Cable Removal/Installation.

(6) Remove servo bracket mounting nuts (Fig. 5).

(7) Remove 2 mounting nuts holding servo cable sleeve to bracket (Fig. 6).

(8) Pull speed control cable sleeve and servo away from servo mounting bracket to expose cable retaining clip (Fig. 6) and remove clip. Note: The servo mounting bracket displayed in (Fig. 6) is a typical bracket and may/may not be applicable to this model vehicle.

(9) Remove servo from mounting bracket. While removing, note orientation of servo to bracket.

SERVO (Continued)

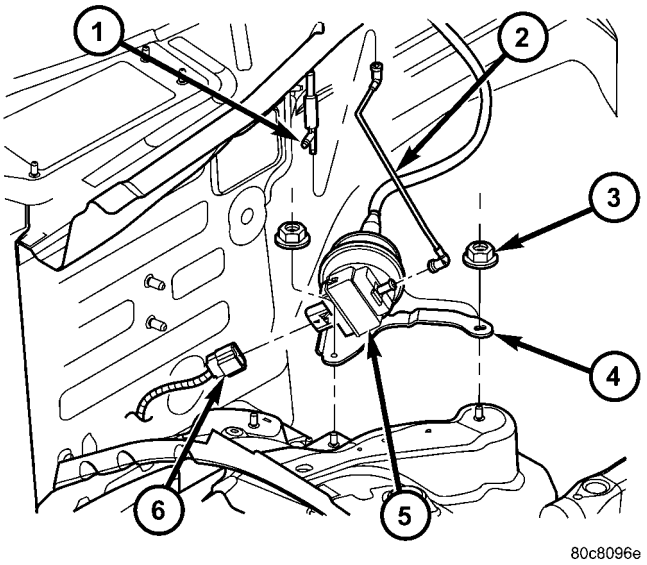

Fig. 5 SPEED CONTROL SERVO

1 - "T" FITTING
2 - VACUUM LINE
3 - SERVO BRACKET MOUNTING NUTS
4 - SERVO MOUNTING BRACKET
5 - SERVO
6 - SERVO ELECTRICAL CONNECTOR

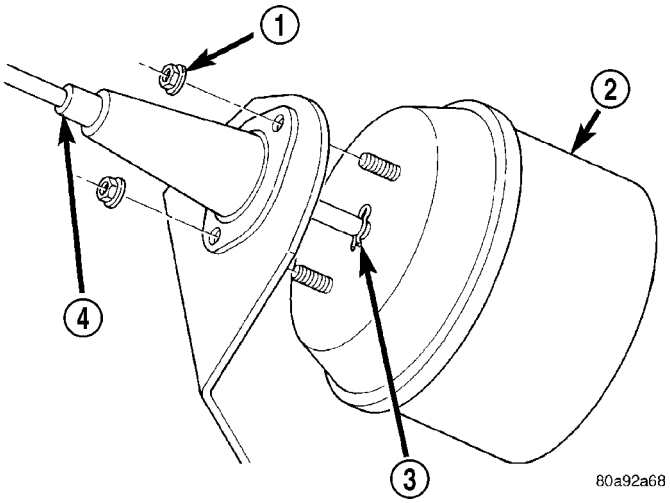

Fig. 6 SERVO CABLE CLIP REMOVE/INSTALL TYPICAL

1 - SERVO MOUNTING NUTS (2)
2 - SERVO
3 - CABLE RETAINING CLIP
4 - SERVO CABLE AND SLEEVE

INSTALLATION

(1) Position servo to mounting bracket.

(2) Align hole in cable connector with hole in servo pin. Install cable-to-servo retaining clip.

(3) Insert servo mounting studs through holes in servo mounting bracket.

(4) Install servo-to-mounting bracket nuts and tighten. Refer to torque specifications.

(5) Install servo mounting bracket-to-body nuts and tighten. Refer to torque specifications.

(6) Connect vacuum line at servo.

(7) Connect electrical connector at servo.

(8) Connect servo cable to throttle body. Refer to servo Cable Removal/Installation.

(9) Install coolant bottle.

(10) Connect negative battery cable to battery.

(11) Before starting engine, operate accelerator pedal to check for any binding.

SWITCH

DESCRIPTION

There are two separate switch pods that operate the speed control system. The steering-wheel-mounted switches use multiplexed circuits to provide inputs to the PCM for ON, OFF, RESUME, ACCELERATE, SET, DECEL and CANCEL modes. Refer to the owner's manual for more information on speed control switch functions and setting procedures.

The individual switches cannot be repaired. If one switch fails, the entire switch module must be replaced.

OPERATION

When speed control is selected by depressing the ON, OFF switch, the PCM allows a set speed to be stored in its RAM for speed control. To store a set speed, depress the SET switch while the vehicle is moving at a speed between approximately 35 and 85 mph. In order for the speed control to engage, the brakes cannot be applied, nor can the gear selector be indicating the transmission is in Park or Neutral.

The speed control can be disengaged manually by:

- Stepping on the brake pedal
- Depressing the OFF switch
- Depressing the CANCEL switch.

The speed control can be disengaged also by any of the following conditions:

- An indication of Park or Neutral
- The VSS signal increases at a rate of 10 mph per second (indicates that the co-efficient of friction between the road surface and tires is extremely low)
- Depressing the clutch pedal.
- Excessive engine rpm (indicates that the transmission may be in a low gear)
- The VSS signal decreases at a rate of 10 mph per second (indicates that the vehicle may have decelerated at an extremely high rate)
- If the actual speed is not within 20 mph of the set speed

SWITCH (Continued)

The previous disengagement conditions are programmed for added safety.

Once the speed control has been disengaged, depressing the ACCEL switch restores the vehicle to the target speed that was stored in the PCM's RAM.

NOTE: Depressing the OFF switch will erase the set speed stored in the PCM's RAM.

If, while the speed control is engaged, the driver wishes to increase vehicle speed, the PCM is programmed for an acceleration feature. With the ACCEL switch held closed, the vehicle accelerates slowly to the desired speed. The new target speed is stored in the PCM's RAM when the ACCEL switch is released. The PCM also has a "tap-up" feature in which vehicle speed increases at a rate of approximately 2 mph for each momentary switch activation of the ACCEL switch.

The PCM also provides a means to decelerate without disengaging speed control. To decelerate from an existing recorded target speed, depress and hold the COAST switch until the desired speed is reached. Then release the switch. The ON, OFF switch operates two components: the PCM's ON, OFF input, and the battery voltage to the brake switch, which powers the speed control servo.

Multiplexing

The PCM sends out 5 volts through a fixed resistor and monitors the voltage change between the fixed resistor and the switches. If none of the switches are depressed, the PCM will measure 5 volts at the sensor point (open circuit). If a switch with no resistor is closed, the PCM will measure 0 volts (grounded circuit). Now, if a resistor is added to a switch, then the PCM will measure some voltage proportional to the size of the resistor. By adding a different resistor to each switch, the PCM will see a different voltage depending on which switch is pushed.

Another resistor has been added to the 'at rest circuit' causing the PCM to never see 5 volts. This was done for diagnostic purposes. If the switch circuit should open (bad connection), then the PCM will see the 5 volts and know the circuit is bad. The PCM will then set an open circuit fault.

REMOVAL

WARNING: BEFORE ATTEMPTING TO DIAGNOSE, REMOVE OR INSTALL ANY AIRBAG SYSTEM OR RELATED STEERING WHEEL AND STEERING COLUMN COMPONENTS YOU MUST FIRST DISCONNECT AND ISOLATE THE NEGATIVE (GROUND) BATTERY CABLE. WAIT 2 MINUTES FOR SYSTEM CAPACITOR TO DISCHARGE BEFORE FURTHER SYSTEM SERVICE. FAILURE TO DO SO COULD RESULT IN ACCIDENTAL DEPLOYMENT AND POSSIBLE PERSONAL INJURY.

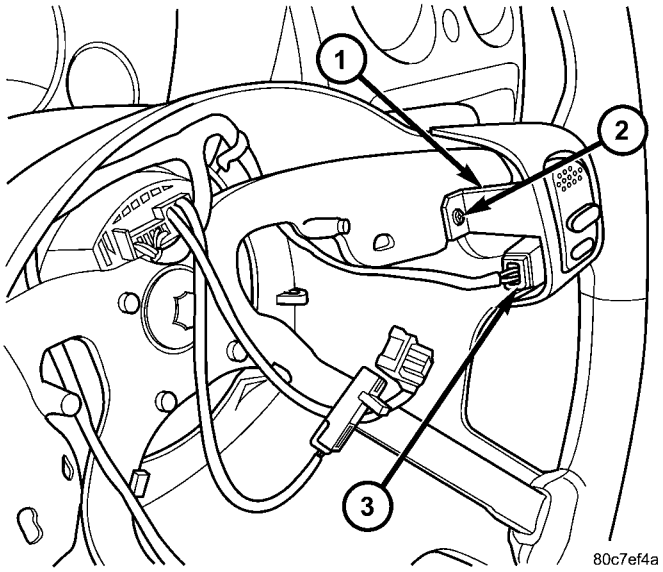

Fig. 7 SPEED CONTROL SWITCH

1 - SWITCH
2 - SCREW
3 - ELECTRICAL CONNECTOR

(1) Disconnect and isolate negative battery cable from battery.

(2) Remove airbag module. Refer to Restraint Systems.

(3) Unplug electrical connector (Fig. 7).

(4) Remove speed control switch mounting screw (Fig. 7) and remove switch from steering wheel.

INSTALLATION

(1) Position switch to steering wheel.

(2) Install switch mounting screw and tighten. Refer to torque specifications.

(3) Plug electrical connector into switch.

(4) Install airbag module. Refer to Restraint Systems.

(5) Connect negative battery cable to battery.

VACUUM RESERVOIR

DESCRIPTION

The vacuum reservoir is a plastic storage tank connected to an engine vacuum source by vacuum lines.

OPERATION

The vacuum reservoir is used to supply the vacuum needed to maintain proper speed control operation when engine vacuum drops, such as in climbing a grade while driving. A one-way check valve is used in the vacuum line between the reservoir and the

VACUUM RESERVOIR (Continued)

vacuum source. This check valve is used to trap engine vacuum in the reservoir. On certain vehicle applications, this reservoir is shared with the heating/air-conditioning system. The vacuum reservoir cannot be repaired and must be replaced if faulty.

DIAGNOSIS AND TESTING - VACUUM RESERVOIR

(1) Disconnect vacuum hose at speed control servo and install a vacuum gauge into the disconnected hose.

(2) Start engine and observe gauge at idle. Vacuum gauge should read at least ten inches of mercury.

(3) If vacuum is less than ten inches of mercury, determine source of leak. Check vacuum line to engine for leaks. Also check actual engine intake manifold vacuum. If manifold vacuum does not meet this requirement, check for poor engine performance and repair as necessary.

(4) If vacuum line to engine is not leaking, check for leak at vacuum reservoir. To locate and gain access to reservoir, refer to Vacuum Reservoir Removal/Installation in this group. Disconnect vacuum line at reservoir and connect a hand-operated vacuum pump to reservoir fitting. Apply vacuum. Reservoir vacuum should not bleed off. If vacuum is being lost, replace reservoir.

(5) Verify operation of one-way check valve and check it for leaks. **Certain models may be equipped with 2 check-valves.**

(a) Locate one-way check valve. The valve is located in vacuum line between vacuum reservoir and engine vacuum source. Disconnect vacuum hoses (lines) at each end of valve.

(b) Connect a hand-operated vacuum pump to reservoir end of check valve. Apply vacuum. Vacuum should not bleed off. If vacuum is being lost, replace one-way check valve.

(c) Connect a hand-operated vacuum pump to vacuum source end of check valve. Apply vacuum. Vacuum should flow through valve. If vacuum is not flowing, replace one-way check valve. Seal the fitting at opposite end of valve with a finger and apply vacuum. If vacuum will not hold, diaphragm within check valve has ruptured. Replace valve.

REMOVAL

The vacuum reservoir is located behind, and at the outer end of the instrument panel (Fig. 8). To gain access for testing or removal, remove glovebox assembly. Also remove fuse box access cover panel at end of instrument panel. On vehicles equipped with LHD (Left Hand Drive), this fuse access panel is located at right end of instrument panel. On vehicles equipped with RHD (Right Hand Drive), this access panel is located at left end of instrument panel.

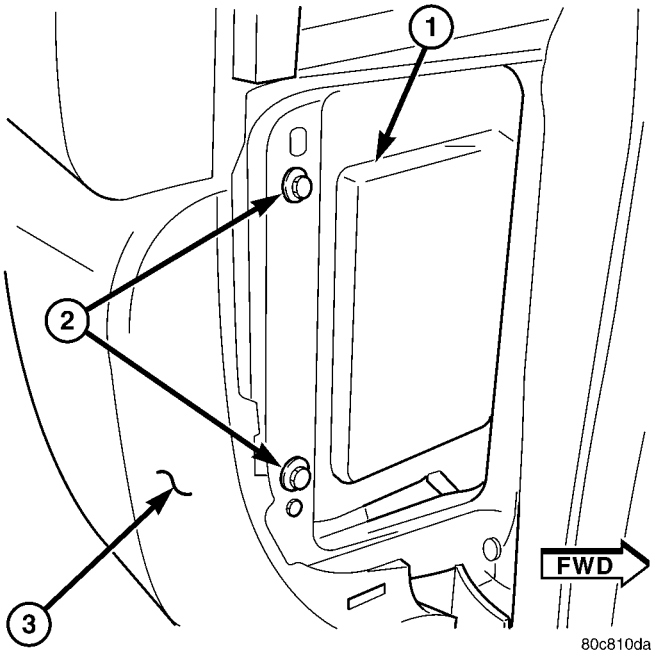

Fig. 8 VACUUM RESERVOIR LOCATION

1 - VACUUM RESERVOIR
2 - HORIZONTAL MOUNTING SCREWS
3 - OUTBOARD END OF I.P.

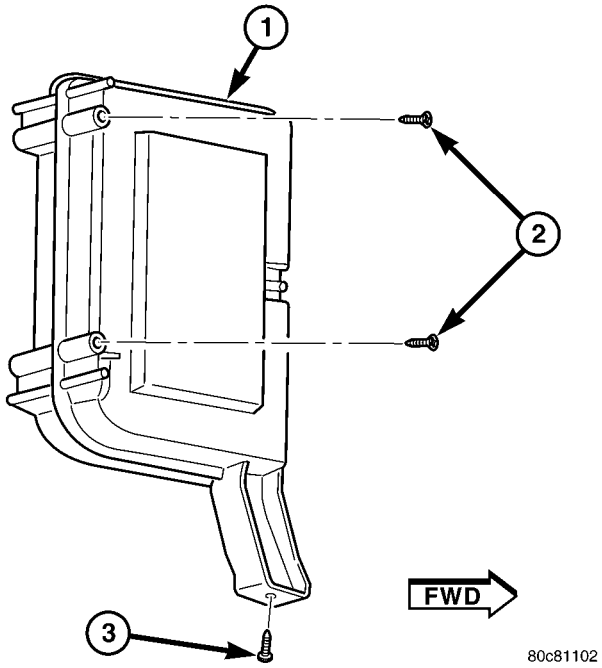

Fig. 9 VACUUM RESERVOIR REMOVE/INSTALL

1 - VACUUM RESERVOIR
2 - HORIZONTAL MOUNTING SCREWS (2)
3 - VERTICAL MOUNTING SCREW (1)

VACUUM RESERVOIR (Continued)

(1) Remove glovebox assembly. Access to reservoir vacuum line and fitting can now be made.

(2) Remove vacuum line at reservoir.

(3) Remove fuse access cover panel at end of instrument panel.

(4) Through fuse access opening, remove 2 horizontally mounted screws (Fig. 8).

(5) From bottom of instrument panel, remove 1 vertically mounted screw (Fig. 9).

(6) Remove reservoir from instrument panel.

INSTALLATION

The vacuum reservoir is located behind, and at the outer end of the instrument panel. To gain access for testing or removal, remove glovebox assembly. Also remove fuse box access cover panel at end of instrument panel. On vehicles equipped with LHD (Left Hand Drive), this fuse access panel is located at right end of instrument panel. On vehicles equipped with RHD (Right Hand Drive), this access panel is located at left end of instrument panel.

(1) Position reservoir to instrument panel.

(2) Install 3 mounting screws and tighten. Refer to torque specifications.

(3) Connect vacuum line to reservoir fitting.

(4) Install glovebox assembly.

(5) Install fuse box access cover panel.

VEHICLE THEFT SECURITY

TABLE OF CONTENTS

	page
VEHICLE THEFT SECURITY	
DESCRIPTION	1
OPERATION	3
DIAGNOSIS AND TESTING	
VEHICLE THEFT SECURITY SYSTEM	6
STANDARD PROCEDURE	
STANDARD PROCEDURE - SKIS INITIALIZATION	7
STANDARD PROCEDURE - SENTRY KEY TRANSPONDER PROGRAMMING	7
HOOD AJAR SWITCH	
DESCRIPTION	8
OPERATION	9
REMOVAL	
SWITCH	9
BRACKET	10
STRIKER	10
INSTALLATION	
SWITCH	10
BRACKET	10
STRIKER	11
UK SECURITY SYSTEM MODULE	
DESCRIPTION	11
OPERATION	12
REMOVAL	13
INSTALLATION	13
SENTRY KEY REMOTE ENTRY MODULE	
DESCRIPTION	13
OPERATION	14
REMOVAL	15
INSTALLATION	16
SIREN	
DESCRIPTION	16
OPERATION	17
REMOVAL	17
INSTALLATION	18
TRANSPONDER KEY	
DESCRIPTION	18
OPERATION	18

VEHICLE THEFT SECURITY

DESCRIPTION

The Vehicle Theft Security System (VTSS) is an available factory-installed option on this model (Fig. 1). The VTSS is comprised of two primary subsystems: Vehicle Theft Alarm (VTA) and Sentry Key Immobilizer System (SKIS).

The VTA is an active system that provides visual and audible responses as deterrents to and warnings of unauthorized vehicle tampering. The SKIS is a passive system that effectively immobilizes the vehicle against unauthorized operation. Following are paragraphs which describe the various components that are included in each of these subsystems of the VTSS.

Except for the Sentry Key transponders, which rely upon Radio Frequency (RF) communication, hard wired circuitry connects the VTA and SKIS components to the electrical system of the vehicle. These hard wired circuits are integral to several wire harnesses, which are routed throughout the vehicle and retained by many different methods. These circuits may be connected to each other, to the vehicle electrical system and to the SKIS components through the use of a combination of soldered splices, splice block connectors, and many different types of wire harness terminal connectors and insulators. Refer to the appropriate wiring information. The wiring information includes wiring diagrams, proper wire and connector repair procedures, further details on wire harness routing and retention, as well as pin-out and location views for the various wire harness connectors, splices and grounds.

VEHICLE THEFT ALARM

The VTA is available in two different configurations for this vehicle: One configuration is designed for vehicles manufactured for sale in North America; while, the other configuration is designed for vehicles manufactured for sale in markets outside of North America, also referred to as Rest-Of-World (ROW) or export. In addition, the VTA for export is available in two versions: base and premium. All vehicles equipped with VTA are also equipped with the Remote Keyless Entry (RKE) system and the Sentry Key Immobilizer System (SKIS), regardless of their market destination.

The North American and export base version of the VTA provides perimeter vehicle protection by monitoring the vehicle doors, the tailgate, the rear flip-up glass and, for vehicles built for certain markets where it is required equipment, the hood. If unauthorized vehicle use or tampering is detected, these sys-

VEHICLE THEFT SECURITY (Continued)

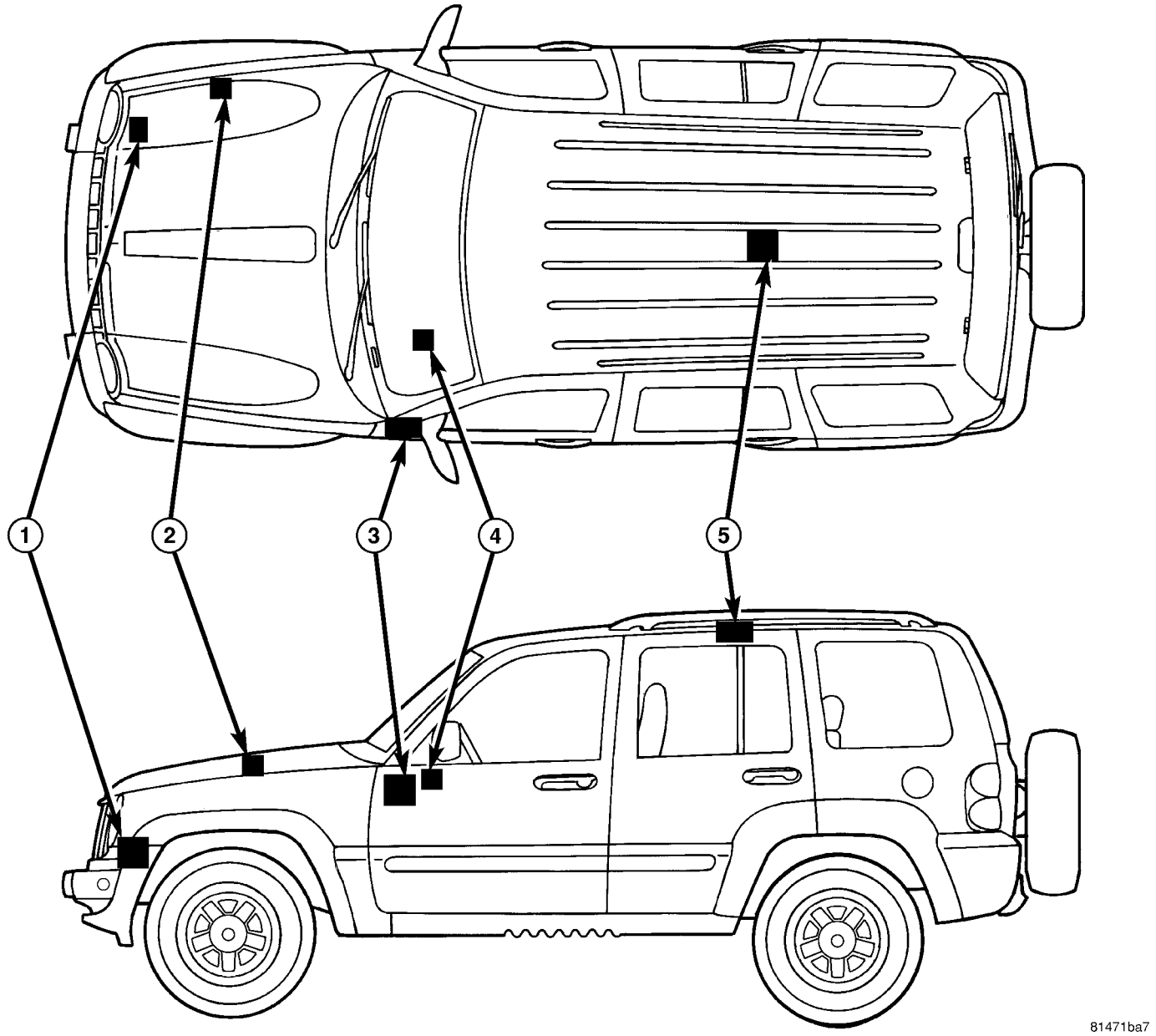

Fig. 1 Vehicle Theft Security System

1 - SIREN MODULE
2 - HOOD AJAR SWITCH
3 - BODY CONTROL MODULE
4 - SENTRY KEY REMOTE ENTRY MODULE
5 - INTRUSION TRANSCEIVER MODULE

tems respond by pulsing the horn and flashing certain exterior lamps.

The export premium version of the VTA is only available in vehicles manufactured for sale in certain markets where it is required equipment. The export premium version of the VTA provides the same perimeter protection features as the base version, but adds interior vehicle intrusion protection. The export premium VTA also replaces the pulsing horn feature of the base version with an alarm siren as the audible deterrent, while retaining the flashing exterior lamps visual deterrent.

The VTA includes the following major components, which are described in further detail elsewhere in this service information:

- **Body Control Module** - The Body Control Module (BCM) is located on the Junction Block (JB) behind the driver side end of the instrument panel. (Refer to 8 - ELECTRICAL/ELECTRONIC CONTROL MODULES/BODY CONTROL MODULE - DESCRIPTION).

VEHICLE THEFT SECURITY (Continued)

- **Combination Flasher** - An electronic combination flasher is integral to the hazard switch located in the center of the instrument panel above the radio. (Refer to 8 - ELECTRICAL/LAMPS/LIGHTING - EXTERIOR/COMBINATION FLASHER - DESCRIPTION).
- **Door Ajar Switches** - A door ajar switch is integral to the latch of each door in the vehicle. (Refer to 8 - ELECTRICAL/LAMPS/LIGHTING - INTERIOR/DOOR AJAR SWITCH - DESCRIPTION).
- **Flip-Up Glass Ajar Switch** - A flip-up glass ajar switch is integral to the rear flip-up glass latch, located on the top of the tailgate near the center. (Refer to 8 - ELECTRICAL/LAMPS/LIGHTING - INTERIOR/FLIP-UP GLASS AJAR SWITCH - DESCRIPTION).
- **Hood Ajar Switch** - A hood ajar switch is located on the right inner fender side shield of Export vehicles built for sale in markets where it is required equipment. (Refer to 8 - ELECTRICAL/VEHICLE THEFT SECURITY/HOOD AJAR SWITCH - DESCRIPTION).
- **Horn Relay** - The horn relay is located on the Junction Block (JB) behind the driver side end of the instrument panel. (Refer to 8 - ELECTRICAL/HORN/HORN RELAY - DESCRIPTION).
- **Intrusion Transceiver Module** - An Intrusion Transceiver Module (ITM) is located near the center of the headliner in the passenger compartment of Export vehicles built for sale in markets where it is required equipment. (Refer to 8 - ELECTRICAL/VEHICLE THEFT SECURITY/UK SECURITY SYSTEM MODULE - DESCRIPTION).
- **Security Indicator** - A security indicator is integral to the ElectroMechanical Instrument Cluster (EMIC). (Refer to 8 - ELECTRICAL/INSTRUMENT CLUSTER/SECURITY INDICATOR - DESCRIPTION).
- **Siren** - An alarm siren is located on the front of the right front wheel house panel in the engine compartment of Export vehicles built for sale in markets where it is required equipment. (Refer to 8 - ELECTRICAL/VEHICLE THEFT SECURITY/SIREN - DESCRIPTION).
- **Tailgate Ajar Switch** - A tailgate ajar switch is integral to the latch for the tailgate in the vehicle. (Refer to 8 - ELECTRICAL/LAMPS/LIGHTING - INTERIOR/TAILGATE AJAR SWITCH - DESCRIPTION).

SENTRY KEY IMMOBILIZER SYSTEM

The Sentry Key Immobilizer System (SKIS) is available as a factory-installed option on this model. Vehicles equipped with the Vehicle Theft Alarm (VTA) are also equipped with SKIS. The SKIS provides passive vehicle protection by preventing the engine from operating unless a valid electronically encoded key is detected in the ignition lock cylinder.

The SKIS includes the following major components, which are described in further detail elsewhere in this service information:

- **Powertrain Control Module** - The Powertrain Control Module (PCM) is located on the left inner fender shield in the engine compartment. (Refer to 8 - ELECTRICAL/ELECTRONIC CONTROL MODULES/POWERTRAIN CONTROL MODULE - DESCRIPTION).
- **Sentry Key Remote Entry Module** - The Sentry Key REmote Entry Module (SKREEM) is sometimes referred to as the Wireless Control Module (WCM). The SKREEM is located on the right side of the steering column near the ignition lock cylinder housing and an integral molded plastic antenna ring circles the ignition lock cylinder like a halo. The SKREEM and its antenna are concealed beneath the steering column shrouds. (Refer to 8 - ELECTRICAL/VEHICLE THEFT SECURITY/SENTRY KEY REMOTE ENTRY MODULE - DESCRIPTION).
- **Sentry Key Transponder** - The Sentry Key transponder is contained within the Remote Keyless Entry (RKE) transmitter on the ignition key. (Refer to 8 - ELECTRICAL/VEHICLE THEFT SECURITY/TRANSPONDER KEY - DESCRIPTION).
- **Security Indicator** - A security indicator is integral to the ElectroMechanical Instrument Cluster (EMIC). (Refer to 8 - ELECTRICAL/INSTRUMENT CLUSTER/SECURITY INDICATOR - DESCRIPTION).

OPERATION

The Vehicle Theft Security System (VTSS) is divided into two basic subsystems: Vehicle Theft Alarm (VTA) and Sentry Key Immobilizer System (SKIS). Following are paragraphs that briefly describe the operation of each of these two subsystems.

VEHICLE THEFT ALARM

The Body Control Module (BCM) is used on this model to control and integrate many of the electronic functions and features included in the Vehicle Theft Alarm (VTA). In the VTA system, the BCM receives inputs indicating the status of the door ajar switches, the ignition switch, the tailgate ajar switch, the flip-up glass ajar switch, the power lock switches and, in vehicles built for certain markets where it is required, the hood ajar switch.

The BCM will process the information from all of these inputs and send control outputs to energize or de-energize the combination flasher, the horn relay (except vehicles with the export premium version of the VTA), and the security indicator as appropriate.

VEHICLE THEFT SECURITY (Continued)

In addition, in vehicles built for certain markets where the export premium version of the VTA is required, the BCM also exchanges electronic messages with the Intrusion Transceiver Module (ITM) over the Programmable Communications Interface (PCI) data bus to provide the features found in this version of the VTA.

The hard wired circuits and components of the VTA may be diagnosed and tested using conventional diagnostic tools and procedures. However, conventional diagnostic methods may not prove conclusive in the diagnosis of the BCM, the EMIC, the ITM, the PCI data bus or the electronic message inputs used to provide the electronic features of the VTA. The most reliable, efficient, and accurate means to diagnose the BCM, the EMIC, the ITM, the PCI data bus, and the electronic message inputs for the VTA requires the use of a diagnostic scan tool. See the "Vehicle Theft Security System" menu item on the scan tool. Refer to the appropriate diagnostic information.

Following are paragraphs that briefly describe the operation of each of the VTA features. See the owner's manual in the vehicle glove box for more information on the features, use and operation of the VTA.

ENABLING

The BCM must have the VTA function electronically enabled in order for the VTA to perform as designed. The logic in the BCM keeps its VTA function dormant until it is enabled using a diagnostic scan tool. The VTA function of the BCM is enabled on vehicles equipped with the VTA option at the factory, but a service replacement BCM must be VTA-enabled by the dealer using a diagnostic scan tool. Refer to the appropriate diagnostic information.

PRE-ARMING

The VTA has a pre-arming sequence. Pre-arming is initiated when a door, the tailgate, or the flip-up glass is open when the vehicle is locked using a power door lock switch, or when the Remote Keyless Entry (RKE) transmitter "Lock" button is depressed. Pre-arming will not occur if the key is in the ignition switch or the headlamps are turned on with the driver side front door open. When the VTA is pre-armed, the arming sequence is delayed until all of the doors, the tailgate and the flip-up glass have been closed. The VTA will remain in "Pre-Armed" mode for up to sixteen seconds after all doors, the tailgate and the flip-up glass have been closed.

ARMING

Passive arming of the VTA occurs when the vehicle is exited with the key removed from the ignition switch, the headlamps are turned off, and the doors are locked while they are open using the power lock switch. Active arming occurs when the "Lock" button on the RKE transmitter is depressed to lock the vehicle after all of the doors, the tailgate and the flip-up glass are closed. For active arming to occur, the doors, the tailgate and the flip-up glass must be closed and the ignition switch must be in the Off position when the RKE transmitter "Lock" button is depressed. The power lock switch will not function if the key is in the ignition switch or the headlamps are turned on with the driver side front door open.

Once the VTA begins the passive or active arming sequence, the security indicator in the instrument cluster will flash rapidly for about sixteen seconds. This indicates that VTA arming is in progress. If the ignition switch is turned to the On position, if a door or the tailgate is unlocked and opened by any means, or the RKE "Panic" button (if equipped) is depressed during the sixteen second arming process, the security indicator will stop flashing and the arming process will abort.

On vehicles equipped with the hood ajar switch, the VTA arming sequence will occur regardless of whether the hood is open or closed, but the underhood area will not be protected unless the hood is closed when the VTA arming sequence begins. Also, if the status of the hood ajar switch changes from open to closed during the sixteen second arming process, the security indicator will stop flashing and the VTA arming sequence will abort. Once the sixteen second arming process is successfully completed, the security indicator will flash at a slower rate, indicating that the VTA is armed.

DISARMING

For vehicles built for the North American market, passive disarming of the VTA occurs by turning the ignition switch to the On position using a valid Sentry Key Immobilizer System (SKIS) key. Active disarming of the VTA for any market occurs when the vehicle is unlocked by depressing the "Unlock" button of the RKE transmitter. Once the alarm has been activated, either disarming method will also deactivate the alarm. Depressing the "Panic" button (if equipped) on the RKE transmitter will **not** disarm the VTA.

POWER-UP MODE

When the armed VTA senses that the battery has been disconnected and reconnected, it enters its power-up mode. In the power-up mode the alarm system remains armed following a battery failure or disconnect. If the VTA was armed prior to a battery disconnect or failure, the technician or vehicle operator will have to actively or passively disarm the alarm system after the battery is reconnected. The power-up

VEHICLE THEFT SECURITY (Continued)

mode will also apply if the battery goes dead while the system is armed, and battery jump-starting is attempted. The VTA will be armed until the technician or vehicle operator has actively or passively disarmed the alarm system. If the VTA is in the disarmed mode prior to a battery disconnect or failure, it will remain disarmed after the battery is reconnected or replaced, or if jump-starting is attempted.

ALARM

The VTA alarm output varies by the version of the VTA with which the vehicle is equipped. In all cases, the alarm provides both visual and audible outputs; however, the time intervals of these outputs vary by the requirements of the market for which the vehicle is manufactured. In all cases, the visual output will be a flashing on and off of the exterior lamps. For vehicles equipped with the North American or the export base version of the VTA, the audible output will be a pulsing of the horn. For vehicles with the export premium version of the VTA, the audible output will be a cycling of the alarm siren. See the owner's manual in the vehicle glove box for details of the alarm output requirements of the specific market for which the vehicle was manufactured. The inputs that will trigger the alarm include the door ajar switches, the tailgate ajar switch, the flip-up glass ajar switch, and in vehicles built for certain markets where they are required, the hood ajar switch and the Intrusion Transceiver Module (ITM).

TAMPER ALERT

The VTA tamper alert feature will pulse the horn (or the alarm siren for the export premium version of the VTA) three times upon VTA disarming, if the alarm was triggered and has since timed-out, or if the battery has been disconnected and reconnected. This feature alerts the vehicle operator that the VTA alarm was activated while the vehicle was unattended.

INTRUSION ALARM

The intrusion alarm is an exclusive feature of the export premium version of the VTA, which is only available in certain markets where it is required. When the VTA is armed, a motion sensor in the Intrusion Transceiver Module (ITM) monitors the interior of the vehicle for movement. If motion is detected, the ITM sends an electronic message to the BCM over the PCI data bus to invoke the visual alarm feature, and sends an electronic message to the alarm siren in the engine compartment over a dedicated serial bus to invoke the audible alarm feature. The motion detect feature of the ITM can be disabled by depressing the "Lock" button on the RKE transmitter three times within fifteen seconds during VTA arming, while the security indicator is still flashing rapidly. The VTA provides a single short siren "chirp" as an audible confirmation that the motion detect disable request has been received.

The ITM must be electronically enabled in order for the intrusion alarm to perform as designed. The logic in the ITM keeps its intrusion alarm function dormant until it is enabled using a diagnostic scan tool. The intrusion alarm function of the ITM is enabled on vehicles equipped with this option at the factory, but a service replacement ITM must be configured and enabled by the dealer using a diagnostic scan tool. Refer to the appropriate diagnostic information.

SENTRY KEY IMMOBILIZER SYSTEM

The Sentry Key Immobilizer System (SKIS) is designed to provide passive protection against unauthorized vehicle use by disabling the engine after about two seconds of running, whenever any method other than a valid Sentry Key is used to start the vehicle. The SKIS is considered a passive protection system because it is always active when the ignition system is energized and does not require any customer intervention. The SKIS uses Radio Frequency (RF) communication to obtain confirmation that the key in the ignition switch is a valid key for operating the vehicle. The microprocessor-based SKIS hardware and software also uses electronic messages to communicate with other electronic modules in the vehicle over the Programmable Communications Interface (PCI) data bus. (Refer to 8 - ELECTRICAL/ELECTRONIC CONTROL MODULES/COMMUNICATION - OPERATION).

Pre-programmed Sentry Key transponders are provided with the vehicle from the factory. Each Sentry REmote Entry Module (SKREEM) will recognize a maximum of eight Sentry Keys. If the customer would like additional keys other than those provided with the vehicle, they may be purchased from any authorized dealer. These additional keys must be programmed to the SKREEM in the vehicle in order for the system to recognize them as valid keys. This can be done by the dealer using a diagnostic scan tool or, if Customer Learn programming is an available SKIS feature in the market where the vehicle was purchased, the customer can program the additional keys, as long as at least two valid Sentry Keys are already available. (Refer to 8 - ELECTRICAL/VEHICLE THEFT SECURITY - STANDARD PROCEDURE - TRANSPONDER PROGRAMMING).

The SKREEM performs a self-test of the SKIS each time the ignition switch is turned to the On position, and will store fault information in the form of a Diagnostic Trouble Code (DTC) if a system malfunction is detected. The SKIS can be diagnosed, and

any stored DTC can be retrieved using a diagnostic scan tool. Refer to the appropriate diagnostic information.

DIAGNOSIS AND TESTING

VEHICLE THEFT SECURITY SYSTEM

The Vehicle Theft Security System (VTSS) is divided into two basic subsystems: Vehicle Theft Alarm (VTA) and Sentry Key Immobilizer System (SKIS). Following are the recommended procedures for diagnosis and testing of each of these two subsystems.

WARNING: To avoid personal injury or death, on vehicles equipped with airbags, disable the supplemental restraint system before attempting any steering wheel, steering column, airbag, occupant classification system, seat belt tensioner, impact sensor, or instrument panel component diagnosis or service. Disconnect and isolate the battery negative (ground) cable, then wait two minutes for the system capacitor to discharge before performing further diagnosis or service. This is the only sure way to disable the supplemental restraint system. Failure to take the proper precautions could result in accidental airbag deployment.

VEHICLE THEFT ALARM

Models equipped with the export premium version of the Vehicle Theft Alarm (VTA) provide some preliminary diagnostic feedback by illuminating the security indicator located in the ElectroMechanical Instrument Cluster (EMIC). If the security indicator illuminates with the ignition switch in the On position, it indicates that there is a communication problem between the Intrusion Transceiver Module (ITM) and the Body Control Module (BCM), or between the ITM and the siren module. The BCM will also turn on the security indicator if it receives a message from the ITM indicating that the ITM has stored a Diagnostic Trouble Code (DTC) for a siren module fault.

The hard wired VTA circuits and components may be diagnosed and tested using conventional diagnostic tools and procedures. Refer to the appropriate wiring information. The wiring information includes wiring diagrams, proper wire and connector repair procedures, details of wire harness routing and retention, connector pin-out information and location views for the various wire harness connectors, splices and grounds.

However, conventional diagnostic methods may not prove conclusive in the diagnosis of the Body Control Module (BCM), the ElectroMechanical Instrument Cluster (EMIC), the Intrusion Transceiver Module (ITM), the Programmable Communications Interface (PCI) data bus, or the electronic message inputs used to provide the electronic features of the VTA. The most reliable, efficient, and accurate means to diagnose the BCM, the EMIC, the ITM, the PCI data bus, and the electronic message inputs for the VTA requires the use of a diagnostic scan tool. Refer to the appropriate diagnostic information.

SENTRY KEY IMMOBILIZER SYSTEM

WARNING: To avoid personal injury or death, on vehicles equipped with airbags, disable the supplemental restraint system before attempting any steering wheel, steering column, airbag, occupant classification system, seat belt tensioner, impact sensor, or instrument panel component diagnosis or service. Disconnect and isolate the battery negative (ground) cable, then wait two minutes for the system capacitor to discharge before performing further diagnosis or service. This is the only sure way to disable the supplemental restraint system. Failure to take the proper precautions could result in accidental airbag deployment.

The hard wired Sentry Key Immobilizer System (SKIS) components and circuits may be diagnosed and tested using conventional diagnostic tools and procedures. Refer to the appropriate wiring information. The wiring information includes wiring diagrams, proper wire and connector repair procedures, details of wire harness routing and retention, connector pin-out information and location views for the various wire harness connectors, splices and grounds.

However, conventional diagnostic methods may not prove conclusive in the diagnosis of the Sentry Key REmote Entry Module (SKREEM), the ElectroMechanical Instrument Cluster (EMIC), the Powertrain Control Module (PCM), the Programmable Communications Interface (PCI) data bus, or the electronic message inputs used to provide the electronic features of the SKIS. The most reliable, efficient, and accurate means to diagnose the SKREEM, the EMIC, the PCM, the CAN data bus, and the electronic message inputs for the SKIS requires the use of a diagnostic scan tool. Refer to the appropriate diagnostic information.

VEHICLE THEFT SECURITY (Continued)

SENTRY KEY IMMOBILIZER SYSTEM DIAGNOSIS		
CONDITION	POSSIBLE CAUSES	CORRECTION
SECURITY INDICATOR FAILS TO LIGHT DURING BULB TEST	1. Light-Emitting Diode (LED) faulty.	1. Perform the instrument cluster actuator test. (Refer to 8 - ELECTRICAL/INSTRUMENT CLUSTER - DIAGNOSIS AND TESTING - ACTUATOR TEST)..
	2. Fuse faulty.	2. Check the SKREEM fused B(+) fuse and the fused ignition switch output (run-start) fuse in the Junction Block (JB). Replace fuses, if required.
	3. Ground path faulty.	3. Check for continuity to ground at the connector for the SKREEM. Repair wiring, if required.
	4. Battery feed faulty.	4. Check for battery voltage at the connector for the SKREEM. Repair wiring, if required.
	5. Ignition feed faulty.	5. Check for battery voltage at the connector for the SKREEM with the ignition switch in the On position. Repair wiring, if required.
SECURITY INDICATOR FLASHES FOLLOWING BULB TEST	1. Invalid key in ignition switch lock cylinder.	1. Replace the key with a known valid key.
	2. Key-related fault.	2. Use a diagnostic scan tool and the appropriate diagnostic information for further diagnosis.
SECURITY INDICATOR LIGHTS SOLID FOLLOWING BULB TEST	1. SKIS system malfunction/ fault detected.	1. Use a diagnostic scan tool and the appropriate diagnostic information for further diagnosis.
	2. SKIS system inoperative.	2. Use a diagnostic scan tool and the appropriate diagnostic information for further diagnosis.

STANDARD PROCEDURE

STANDARD PROCEDURE - SKIS INITIALIZATION

The Sentry Key Immobilizer System (SKIS) must be initialized following a Sentry Key REmote Entry Module (SKREEM) replacement. SKIS initialization requires the use of a diagnostic scan tool. Initialization will also require that you have access to the unique four-digit PIN code that was assigned to the original SKREEM. The PIN code **must** be used to enter the Secured Access Mode in the SKREEM. This PIN number may be obtained from the vehicle owner, from the original vehicle invoice, or from the DaimlerChrysler Customer Center. (Refer to 8 - ELECTRICAL/ELECTRONIC CONTROL MODULES - STANDARD PROCEDURE - PCM/SKREEM PROGRAMMING).

NOTE: If a Powertrain Control Module (PCM) is replaced on a vehicle equipped with the Sentry Key Immobilizer System (SKIS), the unique Secret Key data must be transferred from the Sentry Key REmote Entry Module (SKREEM) to the new PCM using the PCM replacement procedure. This procedure also requires the use of a diagnostic scan tool and the unique four-digit PIN code to enter the Secured Access Mode in the SKREEM. Refer to the appropriate diagnostic information for the proper PCM replacement procedures.

STANDARD PROCEDURE - SENTRY KEY TRANSPONDER PROGRAMMING

All Sentry Keys included with the vehicle are preprogrammed to work with the Sentry Key Immobilizer System (SKIS) when it is shipped from the factory. The Sentry Key REmote Entry Module (SKREEM) can be programmed to recognize up to a total of eight Sentry Keys. When programming a blank Sentry Key transponder, the key must first be cut to match the ignition switch lock cylinder in the vehicle for which it will be used. Once the additional or new key has been cut, the SKREEM must be programmed to recognize it as a valid key. There are two possible methods to program the SKREEM to recognize a new or additional valid key, the Secured Access Method and the Customer Learn Method. Following are the details of these two programming methods.

VEHICLE THEFT SECURITY (Continued)

SECURED ACCESS METHOD

The Secured Access method applies to all vehicles. This method requires the use of a diagnostic scan tool. This method will also require that you have access to the unique four-digit PIN code that was assigned to the original SKREEM. The PIN code **must** be used to enter the Secured Access Mode in the SKREEM. This PIN number may be obtained from the vehicle owner, from the original vehicle invoice, or from the DaimlerChrysler Customer Center. Refer to the appropriate diagnostic information for the proper Secured Access method programming procedures.

CUSTOMER LEARN METHOD

The Customer Learn feature is only available on domestic vehicles, or those vehicles which have a U.S. country code designator. This programming method also requires access to at least two valid Sentry Keys. If two valid Sentry Keys are not available, or if the vehicle does not have a U.S. country code designator, the Secured Access Method **must** be used to program new or additional valid keys to the SKREEM. The Customer Learn programming method procedures are as follows:

(1) Obtain the blank Sentry Key(s) that are to be programmed as valid keys for the vehicle. Cut the blank key(s) to match the ignition switch lock cylinder mechanical key codes.

(2) Insert one of the two valid Sentry Keys into the ignition switch and turn the ignition switch to the On position.

(3) After the ignition switch has been in the On position for longer than three seconds, but no more than fifteen seconds, cycle the ignition switch back to the Off position. Replace the first valid Sentry Key in the ignition switch lock cylinder with the second valid Sentry Key and turn the ignition switch back to the On position. The second valid Sentry Key must be inserted in the lock cylinder within fifteen seconds of removing the first valid key.

(4) About ten seconds after the completion of Step 3, the security indicator in the instrument cluster will start to flash and a single audible chime will sound to indicate that the system has entered the Customer Learn programming mode.

(5) Within sixty seconds of entering the Customer Learn programming mode, turn the ignition switch to the Off position, replace the valid Sentry Key with a blank Sentry Key transponder, and turn the ignition switch back to the On position.

(6) About ten seconds after the completion of Step 5, a single audible chime will sound and the security indicator will stop flashing, stay on solid for three seconds, then turn off to indicate that the blank Sentry Key has been successfully programmed. The SKIS will immediately exit the Customer Learn programming mode. After the ignition is cycled the vehicle may be started using the newly programmed valid Sentry Key.

Each of these steps must be repeated and completed in their entirety for each additional Sentry Key that is to be programmed. If the above steps are not completed in the given sequence, or within the allotted time, the SKIS will exit the Customer Learn programming mode and the programming will be unsuccessful. The SKREEM will also automatically exit the Customer Learn programming mode if it sees a non-blank Sentry Key transponder when it should see a blank, if it has already programmed eight (8) valid Sentry Keys, or if the ignition switch is turned to the Off position for more than about fifty seconds.

NOTE: If an attempt is made to start the vehicle while in the Customer Learn mode (security indicator flashing), the SKIS will respond as though the vehicle were being started with an invalid key. In other words, the engine will stall after about two seconds of operation. No faults will be set.

NOTE: Once a Sentry Key has been programmed as a valid key to a vehicle, it cannot be programmed as a valid key for use on any other vehicle.

HOOD AJAR SWITCH

DESCRIPTION

The hood ajar switch is a normally closed, single pole, spring-loaded plunger actuated switch that is used only on vehicles equipped with the Vehicle Theft Security System (VTSS) for sale in certain export markets where it is required equipment (Fig. 2). The molded plastic switch body has an integral molded connector receptacle on the lower end containing two terminal pins. The switch is connected to the vehicle electrical system through a dedicated take out of the headlamp and dash wire harness.

The switch plunger extends through a mounting collar and sleeve on the upper end of the switch body. The sleeve has a one-time, self-adjustment feature that is activated after the switch is installed by closing the hood. Two integral latches lock the switch into a keyed mounting hole in the stamped steel switch mounting bracket. The mounting bracket is secured with screws to the right inner fender shield near the fender ledge in the engine compartment. A molded plastic striker with an integral retainer and mounting tab is secured to the underside of the hood

HOOD AJAR SWITCH (Continued)

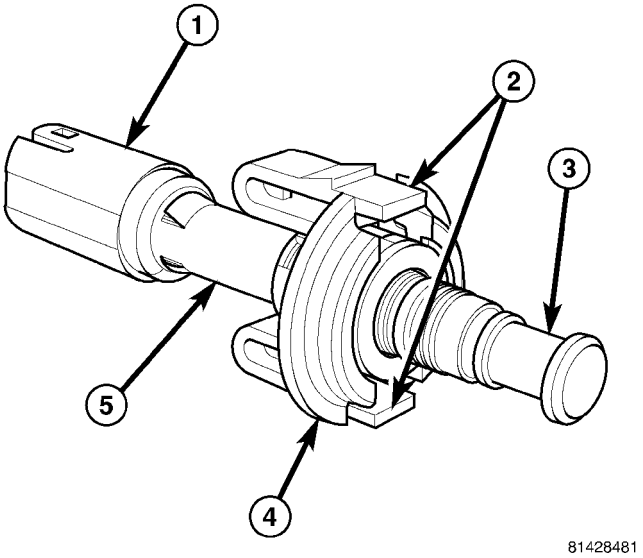

Fig. 2 Hood Ajar Switch

1 - CONNECTOR RECEPTACLE
2 - LATCH (2)
3 - PLUNGER
4 - MOUNTING COLLAR
5 - SWITCH BODY

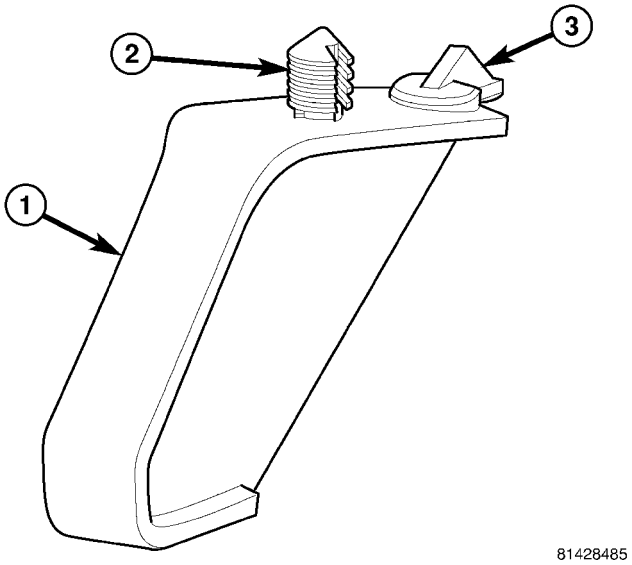

Fig. 3 Hood Ajar Switch Striker

1 - STRIKER
2 - RETAINER
3 - TAB

panel inner reinforcement to actuate the switch plunger as the hood panel is closed (Fig. 3).

An installed hood ajar switch cannot be readjusted or repaired. If the switch is damaged, faulty, or requires readjustment, it must be replaced with a new unit. The hood ajar switch striker is not intended for reuse. If the striker is removed from the hood inner reinforcement for any reason, it must be replaced with a new unit.

OPERATION

The hood ajar switch is a normally closed switch that is held open as the spring-loaded switch plunger is depressed by the striker on the hood panel when the hood panel is closed and latched. When the hood is opened, the spring-loaded switch plunger extends from the switch body and the switch contacts are closed. The switch is connected in series between ground and the hood ajar switch sense input of the Body Control Module (BCM). The BCM uses an internal resistor pull up to monitor the state of the hood ajar switch contacts.

The components of the switch self-adjustment feature include an integral stop on the shaft of the plunger and a ribbed, ratcheting sleeve at the top of the switch body from which the plunger extends. With the switch mounting collar secured in its mounting bracket, the plunger is depressed by the striker on the hood inner reinforcement as the hood is closed. As the plunger is depressed, the plunger stop contacts the top of the sleeve and the sleeve is driven downward, ratcheting through the switch mounting collar until the hood is fully closed and latched. The ribs on the sleeve are engaged within the mounting collar to maintain this adjusted position.

The hood ajar switch and circuits may be diagnosed using conventional diagnostic tools and methods. Refer to the appropriate wiring information. However, conventional diagnostic methods may not prove conclusive in the diagnosis of the BCM or its responses to the hood ajar switch input. The most reliable, efficient, and accurate means to diagnose the hood ajar switch, the BCM, and both the hard wired and electronic message inputs and outputs affected by the hood ajar switch input requires the use of a diagnostic scan tool. Refer to the appropriate diagnostic information.

REMOVAL

SWITCH

(1) Unlatch and open the hood.

(2) Disconnect and isolate the battery negative cable.

(3) From the top of the hood ajar switch mounting bracket, squeeze the two switch latch tabs together and pull the switch upward (Fig. 4).

(4) Pull the hood ajar switch up through the hole in the mounting bracket far enough to access and disconnect the wire harness connector from the switch connector receptacle.

HOOD AJAR SWITCH (Continued)

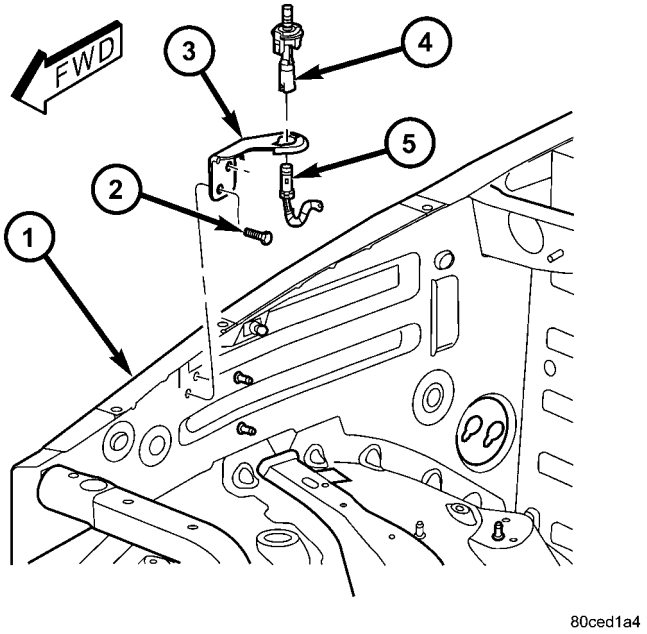

Fig. 4 Hood Ajar Switch Remove/Install

1 - INNER FENDER
2 - SCREW (2)
3 - BRACKET
4 - HOOD AJAR SWITCH
5 - WIRE HARNESS CONNECTOR

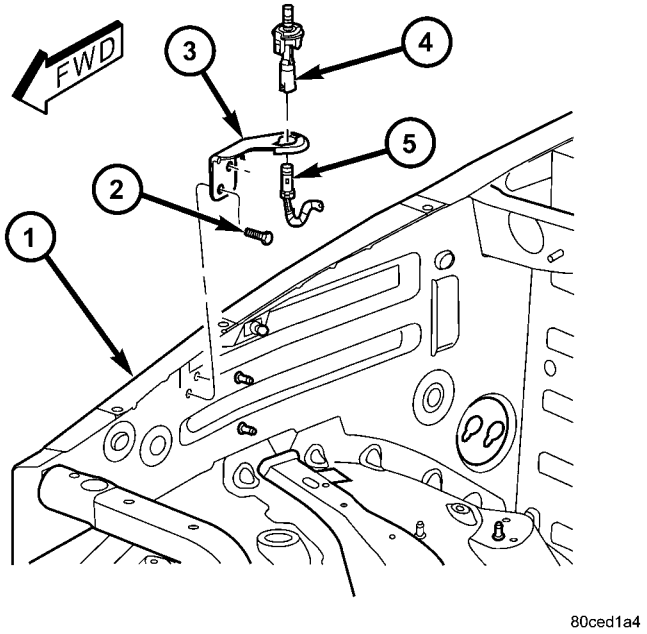

Fig. 5 Hood Ajar Switch Bracket Remove/Install

1 - INNER FENDER
2 - SCREW (2)
3 - BRACKET
4 - HOOD AJAR SWITCH
5 - WIRE HARNESS CONNECTOR

(5) Remove the hood ajar switch from the mounting bracket.

BRACKET

(1) Remove the hood ajar switch from the mounting bracket. (Refer to 8 - ELECTRICAL/VEHICLE THEFT SECURITY/HOOD AJAR SWITCH - REMOVAL).

(2) If necessary, remove and set aside the engine air cleaner housing for access to the hood ajar switch mounting bracket screws.

(3) Remove the two screws that secure the hood ajar switch bracket to the right fender inner shield (Fig. 5).

(4) Remove the hood ajar switch bracket from the right fender inner shield.

STRIKER

NOTE: The hood ajar switch striker is not intended for reuse. If the striker is removed from the hood inner reinforcement for any reason, it must be replaced.

(1) Unlatch and open the hood.

(2) Using a trim stick or another suitable wide flat-bladed tool, pry the rearward end of the hood ajar switch striker away from the inner hood panel reinforcement far enough to disengage the integral retainer from its mounting hole (Fig. 6).

(3) Move the hood ajar switch striker slightly rearward to disengage the integral mounting tab from the forward mounting hole.

(4) Remove the hood ajar switch striker from the inner hood panel reinforcement and discard.

INSTALLATION

SWITCH

(1) Position the hood ajar switch near the hole in the mounting bracket on the right inner fender side shield (Fig. 4).

(2) Pull the wire harness connector through the switch mounting bracket and reconnect it to the switch connector receptacle.

(3) From the top of the mounting bracket, press the switch downward into the mounting hole until the integral switch latch tabs lock it into place.

(4) Reconnect the battery negative cable.

(5) Close and latch the hood.

BRACKET

(1) Position the hood ajar switch bracket onto the right fender inner shield (Fig. 5).

HOOD AJAR SWITCH (Continued)

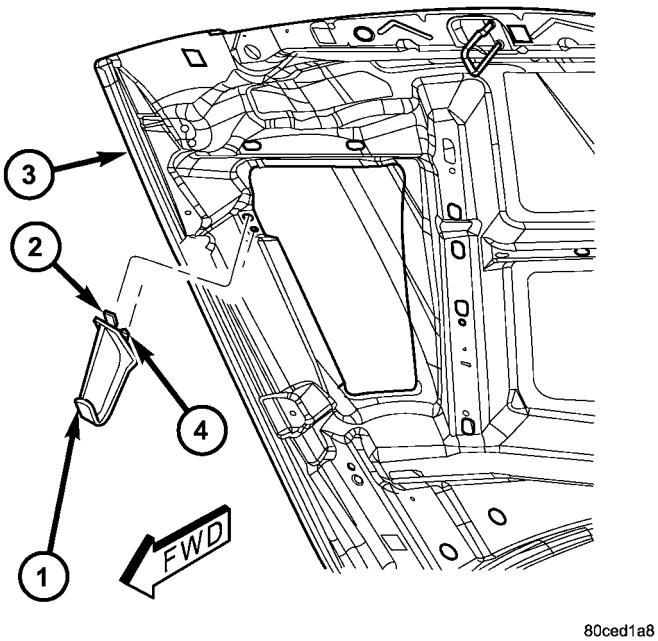

Fig. 6 Hood Ajar Switch Striker Remove/Install

1 - STRIKER
2 - TAB
3 - INNER HOOD REINFORCEMENT
4 - RETAINER

(2) Install and tighten the two screws that secure the hood ajar switch bracket to the right fender inner shield. Tighten the screws to 7 N·m (60 in. lbs.).

(3) If removed, reinstall the engine air cleaner housing.

(4) Reinstall the hood ajar switch into the mounting bracket. (Refer to 8 - ELECTRICAL/VEHICLE THEFT SECURITY/HOOD AJAR SWITCH - INSTALLATION).

STRIKER

NOTE: The hood ajar switch striker is not intended for reuse. If the striker is removed from the hood inner reinforcement for any reason, it must be replaced.

(1) Position the new hood ajar switch striker to the inner hood panel reinforcement (Fig. 6).

(2) Insert the mounting tab on the front of the hood ajar switch striker into the forward mounting hole.

(3) Align the retainer on the rear of the hood ajar switch striker with the rearward mounting hole.

(4) Using hand pressure, press the hood ajar switch striker rearward and upward against the inner hood panel reinforcement until the retainer is fully engaged in the rearward mounting hole.

(5) Close and latch the hood.

UK SECURITY SYSTEM MODULE

DESCRIPTION

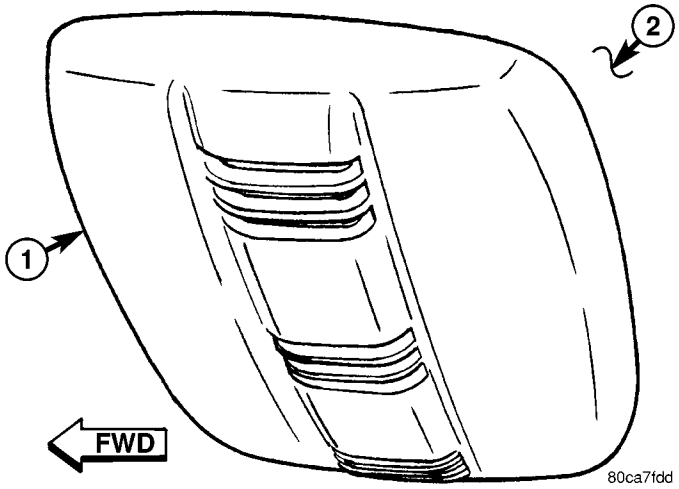

Fig. 7 Intrusion Transceiver Module

1 - ITM
2 - HEADLINER

An Intrusion Transceiver Module (ITM) is part of the export premium version of the Vehicle Theft Alarm (VTA) in the Vehicle Theft Security System (VTSS) (Fig. 7). The export premium version of the VTA is only available in vehicles built for certain export markets, where the additional features offered by this system are required. The ITM is located in the passenger compartment, on the lower surface of the headliner near the center of the vehicle. This component is designed to provide interior motion detection, and serve as an interface between the Body Control Module (BCM) and the alarm siren module.

The ITM is concealed beneath a molded plastic trim cover that approximates the size and shape of a typical dome lamp housing. Rather than a lens, the ITM features three sets of louvered openings. Each of the louvered openings is covered on the inside by a single molded black plastic sight shield that extends the length of the center rib for appearance. The module is secured to a molded plastic mounting bracket above the headliner. Besides the ITM, the trim cover also conceals two plastic pins integral to the mounting bracket that are used to secure the bracket to the headliner with two stamped nuts that are installed from below. An adhesive-backed foam pad is installed above the ITM bracket between the headliner and the roof panel to provide additional headliner stabilization and support for the ITM mounting. Two small notch-like service holes on the rear edge of the trim

cover afford access to the two integral rear latches of the ITM for service removal (Fig. 8).

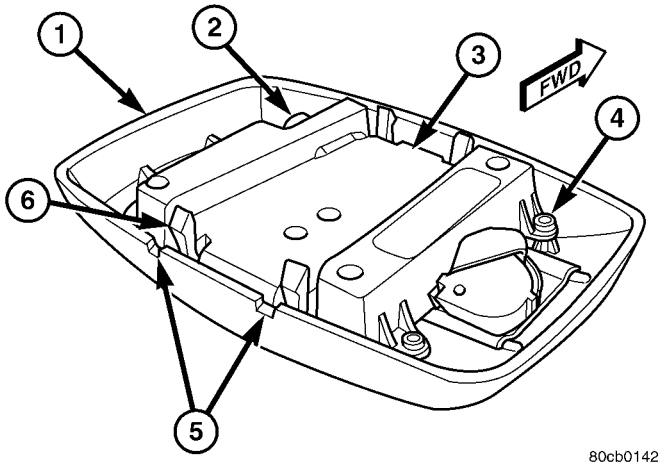

Fig. 8 Intrusion Transceiver Module

1 - TRIM COVER
2 - CONNECTOR RECEPTACLE
3 - HOUSING
4 - SCREW (4)
5 - SERVICE HOLE (2)
6 - LATCH FEATURE (4)

Concealed within the housing is the electronic circuitry of the ITM which includes a microprocessor, and an ultrasonic receive transducer. A molded plastic connector containing six terminal pins that is soldered to a small circuit board and extends through a clearance hole in the left front corner of the ITM housing, and an ultrasonic transmit transducer housing extends from the center of the right side of the ITM housing. Both the transmit transducer on the right side of the module and the receive transducer on the ITM circuit board are aimed through two small round holes in the sight shield of the trim cover. The ITM is connected to the vehicle electrical system by a wire harness that is integral to the headliner.

The ITM unit cannot be adjusted or repaired and, if faulty or damaged, it must be replaced.

OPERATION

The microprocessor in the Intrusion Transceiver Module (ITM) contains the motion sensor logic circuits and controls all of the features of the export premium version of the Vehicle Theft Alarm (VTA). The ITM uses On-Board Diagnostics (OBD) and can communicate with other electronic modules in the vehicle as well as with a diagnostic scan tool using the Programmable Communications Interface (PCI) data bus network. This method of communication is used by the ITM to communicate with the Body Control Module (BCM) and for diagnosis and testing through the 16-way data link connector located on the driver side lower edge of the instrument panel. The ITM also communicates with the alarm siren module over a dedicated serial bus circuit.

The ITM microprocessor continuously monitors inputs from its on-board motion sensor circuitry as well as inputs from the BCM and the alarm siren module. The on-board ITM motion sensor circuitry transmits ultrasonic signals into the vehicle cabin through a transmit transducer, then listens to the returning signals as they bounce off of objects in the vehicle interior. If an object is moving in the interior, a detection circuit in the ITM senses this movement through the modulation of the returning ultrasonic signals that occurs due to the Doppler effect. The motion detect function of the ITM can be disabled by depressing the “Lock” button on the Remote Keyless Entry (RKE) transmitter three times within fifteen seconds, while the VTA is arming (security indicator is still flashing rapidly). The ITM will signal the alarm siren module to provide a single siren “chirp” as an audible confirmation that the motion sensor function has been disabled.

If movement is detected, the ITM sends an electronic message to the BCM over the PCI data bus to flash the exterior lighting and sends an electronic message to the alarm siren module over a dedicated serial bus line to sound the siren. When the BCM detects a breach in the perimeter protection through a door, tailgate, flip-up glass, or hood ajar switch input, it sends an electronic message to the ITM and the ITM sends an electronic message to the BCM over the PCI data bus to flash the exterior lighting and sends an electronic message to the alarm siren module over a dedicated serial bus line to sound the siren. The ITM also monitors inputs from the alarm siren module for siren battery or siren input/output circuit tamper alerts, and for siren battery condition alerts, then sets an active or stored Diagnostic Trouble Code (DTC) for any monitored system faults it detects. An active fault only remains for the current ignition switch cycle, while a stored fault causes a DTC to be stored in memory by the ITM. If a fault does not recur for fifty ignition cycles, the ITM will automatically erase the stored DTC.

The ITM is connected to the vehicle electrical system through the overhead wire harness. The ITM receives battery current through a fuse in the Junction Block (JB), and receives ground through the body wire harness from a ground screw located at the base of the left D-pillar behind the quarter trim panel. These connections allow the ITM to remain operational, regardless of the ignition switch position. The hard wired inputs and outputs for the ITM may be diagnosed and tested using conventional diagnostic tools and procedures. However, conventional diagnostic methods will not prove conclusive in the

UK SECURITY SYSTEM MODULE (Continued)

diagnosis of the ITM, the PCI data bus, or the electronic message inputs to and outputs from the ITM. The most reliable, efficient, and accurate means to diagnose the ITM, the PCI data bus, and the electronic message inputs to and outputs from the ITM requires the use of a diagnostic scan tool. Refer to the appropriate diagnostic information.

REMOVAL

(1) Disconnect and isolate the battery negative cable.

(2) While lightly pulling downward on either rear corner of the Intrusion Transceiver Module (ITM) trim cover, insert a small thin-bladed screwdriver through each of the service holes on the rear edge of the trim cover to depress and release the two integral rear latch features of the module from the mounting bracket above the headliner (Fig. 9).

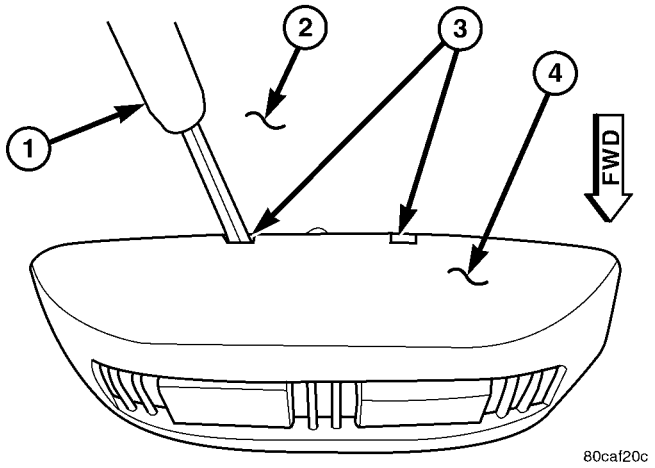

Fig. 9 Intrusion Transceiver Module Remove

1 - SMALL SCREWDRIVER
2 - HEADLINER
3 - SERVICE HOLES
4 - ITM

(3) Pull the ITM trim cover rearward far enough to disengage the two integral front latch features of the module from the mounting bracket above the headliner.

(4) Pull the ITM and trim cover down from the headliner far enough to access and disconnect the overhead wire harness connector for the ITM from the module connector receptacle.

(5) Remove the ITM from the headliner.

INSTALLATION

(1) Position the Intrusion Transceiver Module (ITM) to the headliner.

(2) Reconnect the overhead wire harness connector for the ITM to the module connector receptacle.

(3) Align the two front latch features of the ITM with the mounting bracket above the headliner (Fig. 10).

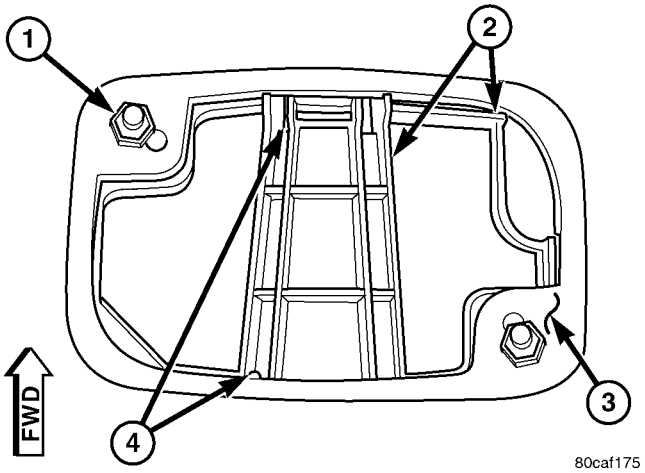

Fig. 10 Intrusion Transceiver Module Mounting Bracket

1 - STAMPED NUT (2)
2 - MOUNTING BRACKET
3 - HEADLINER
4 - LATCH RECEPTACLES (4)

(4) Push the ITM trim cover forward far enough to insert the two integral rear latch features of the module into the two rear latch receptacles of the mounting bracket above the headliner.

(5) Push upward firmly and evenly on the rear edge of the ITM trim cover until the two rear latch features of the module are engaged in the mounting bracket above the headliner.

(6) Reconnect the battery negative cable.

NOTE: If the Intrusion Transceiver Module (ITM) has been replaced with a new unit, the new ITM MUST be initialized before the Vehicle Theft Security System can operate as designed. The use of a diagnostic scan tool is required to initialize the ITM. Refer to the appropriate diagnostic information.

SENTRY KEY REMOTE ENTRY MODULE

DESCRIPTION

The Sentry Key REmote Entry Module (SKREEM) is sometimes referred to as the Wireless Control Module (WCM) (Fig. 11). The SKREEM is the primary component of the Sentry Key Immobilizer System (SKIS) and is also the receiver for the Remote Keyless Entry (RKE) system and the Tire Pressure Monitor (TPM) system. The SKREEM is located on the right side of the steering column, near the igni-

SENTRY KEY REMOTE ENTRY MODULE (Continued)

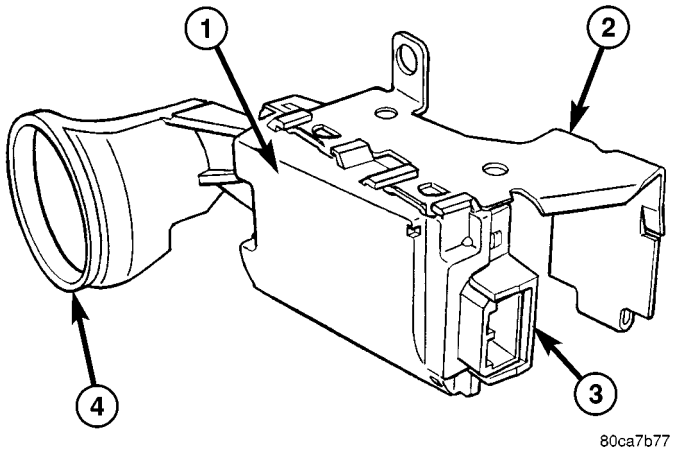

Fig. 11 Sentry Key Remote Entry Module

1 - SKREEM
2 - BRACKET
3 - CONNECTOR RECEPTACLE
4 - ANTENNA RING

tion lock cylinder housing and is concealed beneath the steering column shrouds. The molded black plastic housing for the SKREEM has an integral molded plastic halo-like antenna ring that extends from one end. When the SKREEM is properly installed on the steering column, the antenna ring is oriented around the circumference of the ignition lock cylinder housing.

A single integral connector receptacle is located on the opposite end of the SKREEM housing from the antenna ring. A stamped metal mounting bracket secured to the SKREEM housing is used to secure the component to the right lower flange of the steering column jacket. The SKREEM is connected to the vehicle electrical system through a single take out and connector of the instrument panel wire harness.

Several SKREEM modules are used, specific to optional vehicle equipment and the market in which the vehicle is sold. The SKREEM cannot be adjusted or repaired. If faulty or damaged, the entire SKREEM unit must be replaced.

OPERATION

The Sentry Key REmote Entry Module (SKREEM) contains a Radio Frequency (RF) transceiver and a microprocessor. The SKIM transmits RF signals to, and receives RF signals from the Sentry Key transponder through a tuned antenna enclosed within the molded plastic antenna ring integral to the SKREEM housing. If this antenna ring is not mounted properly around the ignition lock cylinder housing, communication problems between the SKREEM and the transponder may arise. These communication problems will result in Sentry Key transponder-related faults.

The SKREEM also serves as the Remote Keyless Entry (RKE) and the Tire Pressure Monitor (TPM) RF receiver. (Refer to 8 - ELECTRICAL/POWER LOCKS - DESCRIPTION) or (Refer to 22 - TIRES/WHEELS/TIRE PRESSURE MONITORING - DESCRIPTION). The SKREEM communicates over the Programmable Communications Interface (PCI) data bus with the Body Control Module (BCM), the Electronic Vehicle Information Center (EVIC), the Powertrain Control Module (PCM), and/or the diagnostic scan tool.

The SKREEM retains in memory the ID numbers of any Sentry Key transponder that is programmed into it. A maximum of eight Sentry Key transponders can be programmed into the SKREEM. For added system security, each SKREEM is programmed with a unique Secret Key code. This code is stored in memory, sent over the PCI data bus to the PCM, and is encoded to the transponder of every Sentry Key that is programmed into the SKREEM. Therefore, the Secret Key code is a common element that is found in every component of the Sentry Key Immobilizer System (SKIS). Another security code, called a PIN, is used to gain access to the SKREEM Secured Access Mode. The Secured Access Mode is required during service to perform the SKIS initialization and Sentry Key transponder programming procedures. The SKREEM also stores the Vehicle Identification Number (VIN) in its memory, which it learns through a PCI data bus message from the PCM during SKIS initialization.

In the event that a SKREEM replacement is required, the Secret Key code can be transferred to the new SKREEM from the PCM using the diagnostic scan tool and the SKIS initialization procedure. Proper completion of the SKIS initialization will allow the existing Sentry Keys to be programmed into the new SKREEM so that new keys will not be required. In the event that the original Secret Key code cannot be recovered, SKREEM replacement will also require new Sentry Keys. The diagnostic scan tool will alert the technician during the SKIS initialization procedure if new Sentry Keys are required.

When the ignition switch is turned to the On position, the SKREEM transmits an RF signal to the transponder in the ignition key. The SKREEM then waits for an RF signal response from the transponder. If the response received identifies the key as valid, the SKREEM sends a valid key message to the PCM over the PCI data bus. If the response received identifies the key as invalid, or if no response is received from the key transponder, the SKREEM sends an invalid key message to the PCM. The PCM will enable or disable engine operation based upon the status of the SKREEM messages. It is important to note that the default condition in the PCM is an

SENTRY KEY REMOTE ENTRY MODULE (Continued)

invalid key; therefore, if no message is received from the SKREEM by the PCM, the engine will be disabled and the vehicle immobilized after two seconds of running.

The SKREEM also sends SKIS indicator status messages to the BCM over the PCI data bus to tell the BCM how to operate the security indicator in the ElectroMechanical Instrument Cluster (EMIC). This indicator status message tells the BCM to turn the indicator on for about three seconds each time the ignition switch is turned to the On position as a bulb test. After completion of the bulb test, the SKREEM sends indicator status messages to the BCM to turn the indicator off, turn the indicator on, or to flash the indicator on and off. If the security indicator flashes upon ignition On or stays on solid after the bulb test, it signifies a SKIS fault.

If the SKREEM detects a system malfunction and/or the SKIS has become inoperative, the security indicator will stay on solid. If the SKREEM detects an invalid key or if a key transponder-related fault exists, the security indicator will flash. If the vehicle is equipped with the Customer Learn transponder programming feature, the SKREEM will also send messages to the BCM to flash the security indicator and to generate a single audible chime whenever the Customer Learn programming mode is being utilized. (Refer to 8 - ELECTRICAL/VEHICLE THEFT SECURITY - STANDARD PROCEDURE - SENTRY KEY TRANSPONDER PROGRAMMING).

The SKIS performs a self-test each time the ignition switch is turned to the On position, and will store fault information in the form of a Diagnostic Trouble Code (DTC) in SKREEM memory if a system malfunction is detected. The SKREEM can be diagnosed, and any stored DTC can be retrieved using a diagnostic scan tool. Refer to the appropriate diagnostic information.

REMOVAL

WARNING: To avoid personal injury or death, on vehicles equipped with airbags, disable the supplemental restraint system before attempting any steering wheel, steering column, airbag, occupant classification system, seat belt tensioner, impact sensor, or instrument panel component diagnosis or service. Disconnect and isolate the battery negative (ground) cable, then wait two minutes for the system capacitor to discharge before performing further diagnosis or service. This is the only sure way to disable the supplemental restraint system. Failure to take the proper precautions could result in accidental airbag deployment.

(1) Disconnect and isolate the negative battery cable.

(2) If the vehicle is equipped with a tilt steering column, move the tilt steering column to the fully lowered position and leave the tilt release lever in the released (down) position.

(3) From below the steering column, remove the two screws that secure the lower shroud to the upper shroud (Fig. 12).

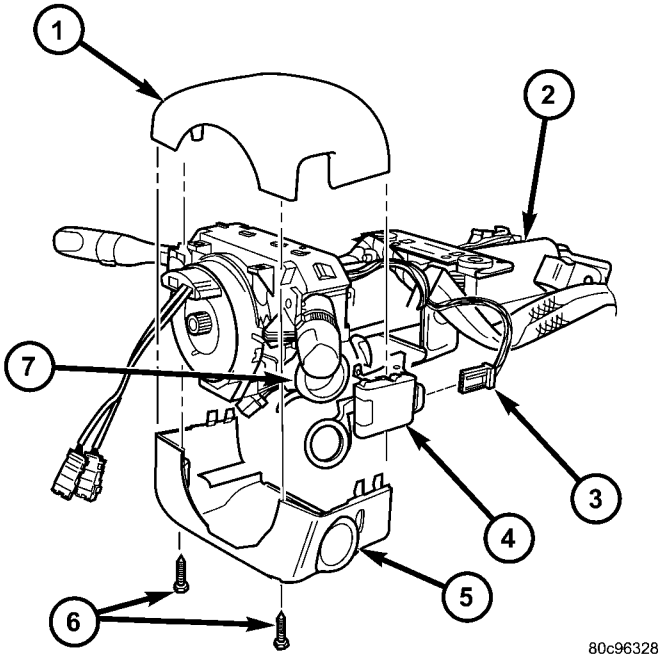

Fig. 12 Sentry Key Remote Entry Module Remove/ Install

1 - UPPER SHROUD
2 - STEERING COLUMN
3 - WIRE HARNESS CONNECTOR
4 - SKREEM
5 - LOWER SHROUD
6 - SCREW (2)
7 - IGNITION LOCK CYLINDER HOUSING

(4) Using hand pressure, push gently inward on both sides of the upper shroud near the parting line of the lower shroud to release the snap features that secure the two shroud halves to each other.

(5) Remove both the upper and lower shrouds from the steering column.

(6) Disconnect the wire harness connector from the Sentry Key REmote Entry Module (SKREEM).

(7) The SKREEM mounting bracket features a clip that secures the module to the right lower flange of the steering column jacket. Pull downward on the connector end of the SKREEM mounting bracket to release this clip from the steering column.

(8) Rotate the SKREEM and its mounting bracket downwards and then to the side away from the steering column to disengage the antenna ring from around the ignition lock cylinder housing.

SENTRY KEY REMOTE ENTRY MODULE (Continued)

(9) Lift the multi-function switch upward off of the upper steering column housing far enough to remove the SKREEM antenna ring formation from between the ignition key release button and the multi-function switch housing.

(10) Remove the SKREEM from the steering column.

INSTALLATION

WARNING: To avoid personal injury or death, on vehicles equipped with airbags, disable the supplemental restraint system before attempting any steering wheel, steering column, airbag, occupant classification system, seat belt tensioner, impact sensor, or instrument panel component diagnosis or service. Disconnect and isolate the battery negative (ground) cable, then wait two minutes for the system capacitor to discharge before performing further diagnosis or service. This is the only sure way to disable the supplemental restraint system. Failure to take the proper precautions could result in accidental airbag deployment.

(1) Position the SKREEM to the right side of the steering column.

(2) Lift the multi-function switch upward off of the upper steering column housing far enough to insert the SKREEM antenna ring formation between the ignition key release button and the multi-function switch housing (Fig. 12).

(3) Slide the SKREEM antenna ring around the ignition switch lock cylinder housing, then rotate the SKREEM and its mounting bracket upwards and toward the steering column.

(4) Align the SKREEM mounting bracket clip with the right lower flange of the steering column jacket and, push upward firmly and evenly on the connector end of the module mounting bracket to engage this clip with the steering column.

(5) Reconnect the wire harness connector to the SKREEM.

(6) Position both the upper and lower shrouds onto the steering column.

(7) Align the snap features on the lower shroud with the receptacles in the upper shroud and apply hand pressure to snap them together.

(8) From below the steering column, install and tighten the two screws that secure the lower shroud to the upper shroud. Tighten the screws to 2 N·m (18 in. lbs.).

(9) If the vehicle is equipped with a tilt steering column, move the column to the fully raised position and secure it in place by moving the tilt release lever back to the locked (up) position.

(10) Reconnect the negative battery cable.

NOTE: If the Sentry Key REmote Entry Module (SKREEM) is replaced with a new unit, a diagnostic scan tool MUST be used to initialize the new SKREEM and to program at least two Sentry Key transponders before the vehicle can be operated. (Refer to 8 - ELECTRICAL/VEHICLE THEFT SECURITY - STANDARD PROCEDURE - SKIS INITIALIZATION).

SIREN

DESCRIPTION

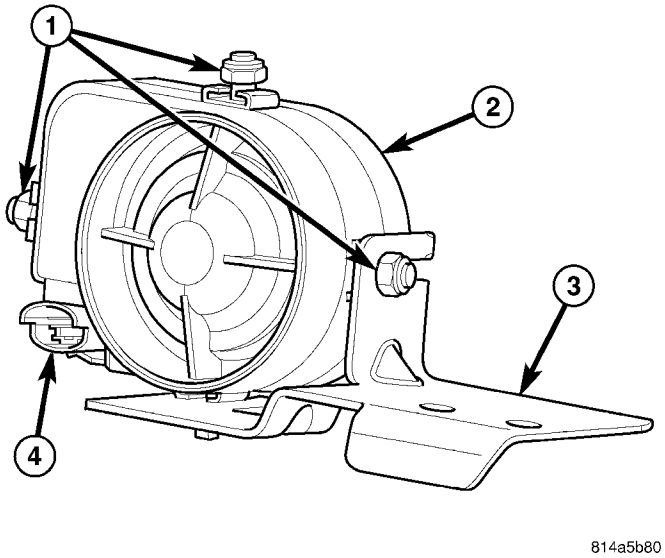

Fig. 13 Siren Module

1 - NUT (3)
2 - SIREN MODULE
3 - BRACKET
4 - CONNECTOR RECEPTACLE

An alarm siren module is part of the export premium version of the Vehicle Theft Alarm (VTA) in the Vehicle Theft Security System (VTSS) (Fig. 13). The export premium version of the VTA is only available in vehicles built for certain markets where the additional features offered by this system are required. The alarm siren module is located in the engine compartment, on the front extension of the right front wheel house panel below and behind the right headlamp. This assembly is designed to provide the audible alert requirements for the export premium VTA.

The alarm siren module consists of microprocessor-based electronic control circuitry, the siren, and a nickel metal hydride backup battery. All of the alarm module components are protected and sealed within a molded plastic housing. A stamped steel mounting bracket is secured to the module with three stud

SIREN (Continued)

plates and nuts that fit into slotted holes at the top and each side of the bracket. Two mounting holes in the horizontal surface of the bracket are used to secure the alarm siren module to the wheel house extension with screws. A connector receptacle extends forward from the alarm siren housing, and connects the module to the vehicle electrical system through a dedicated take out of the headlamp and dash wire harness.

The alarm siren module cannot be repaired or adjusted and, if faulty or damaged, it must be replaced.

OPERATION

The microprocessor within the alarm siren module performs the tasks required to provide the siren features and functions based upon internal programming and electronic arm and disarm message inputs received from the Intrusion Transceiver Module (ITM) over a dedicated serial bus communication circuit. Upon receiving a request from the ITM, the alarm siren module will self-detect problems with its internal and external power supply and communication circuits, then send electronic messages indicating the problem to the ITM. The ITM will store a Diagnostic Trouble Code (DTC) for a detected alarm siren module fault that can be retrieved with a diagnostic scan tool over the Programmable Communications Interface (PCI) data bus through the 16-way data link connector located on the driver side lower edge of the instrument panel.

When the export premium version of the Vehicle Theft Alarm (VTA) is armed, the alarm siren module microprocessor continuously monitors inputs from the ITM for messages to sound its internal siren and to enter its auto-detect mode. While in the auto-detect mode, if the alarm siren module detects that its power supply or communication circuits are being tampered with or have been sabotaged, it will sound an alarm and continue to operate through its on-board backup battery. If the alarm siren module is in its disarmed mode when its power supply or communication circuits are interrupted, the siren will not sound. The alarm module will also notify the ITM when the backup battery requires charging, and the ITM will send a message that will allow the backup battery to be charged through the battery voltage and ground circuits to the alarm module only when the ignition switch is in the On position and the engine is running. This will prevent the recharging of the alarm backup battery from depleting the charge in the main vehicle battery while the vehicle is not being operated.

The alarm siren module receives battery voltage through a fuse in the Power Distribution Center (PDC), and receives ground through a ground location on the left inner fender shield in the engine compartment. These connections allow the alarm siren module to remain operational, regardless of the ignition switch position. The hard wired inputs and outputs for the alarm siren module may be diagnosed and tested using conventional diagnostic tools and procedures. However, conventional diagnostic methods will not prove conclusive in the diagnosis of the internal circuitry or the backup battery of the alarm siren module, the ITM, the serial bus communication line, or the electronic message inputs to and outputs from the alarm siren module. The most reliable, efficient, and accurate means to diagnose the alarm siren module, the ITM, the serial bus communication line, and the electronic message inputs to and outputs from the alarm siren module requires the use of a diagnostic scan tool. Refer to the appropriate diagnostic information.

REMOVAL

(1) Disconnect and isolate the battery negative cable.

(2) Disconnect the wire harness connector from the connector receptacle of the alarm siren module (Fig. 14).

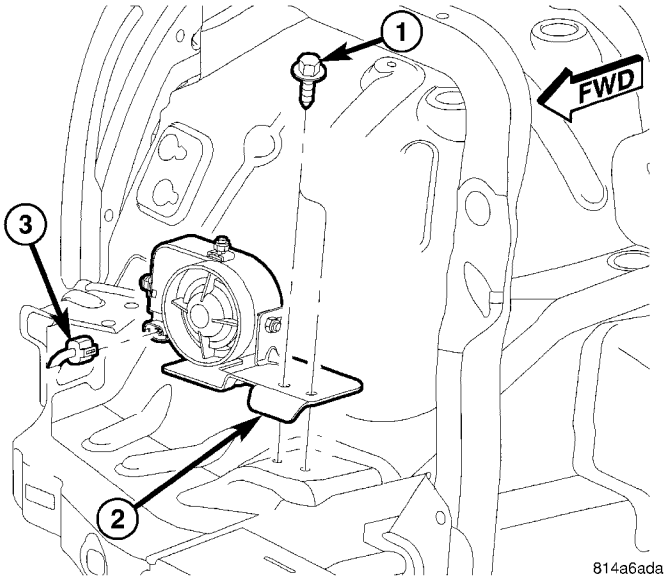

Fig. 14 Siren Remove/Install

1 - SCREW (2)
2 - SIREN
3 - WIRE HARNESS CONNECTOR

(3) Remove the two screws that secure the alarm siren module to the front extension of the right front wheel house panel.

(4) Remove the alarm siren module from the front extension of the right front wheel house panel.

SIREN (Continued)

INSTALLATION

(1) Position the alarm siren module onto the front extension of the right front wheel house panel (Fig. 14).

(2) Install and tighten the two screws that secure the alarm siren module to the front extension of the right front wheel house panel. Tighten the screws to 6 N·m (50 in. lbs.).

(3) Reconnect the wire harness connector for the alarm siren module.

(4) Reconnect the battery negative cable.

NOTE: If the alarm siren module has been replaced with a new unit, the new unit MUST be configured in the Intrusion Transceiver Module (ITM) before the Vehicle Theft Security System can operate as designed. The use of a diagnostic scan tool is required to configure the alarm siren module settings in the ITM. Refer to the appropriate diagnostic information.

TRANSPONDER KEY

DESCRIPTION

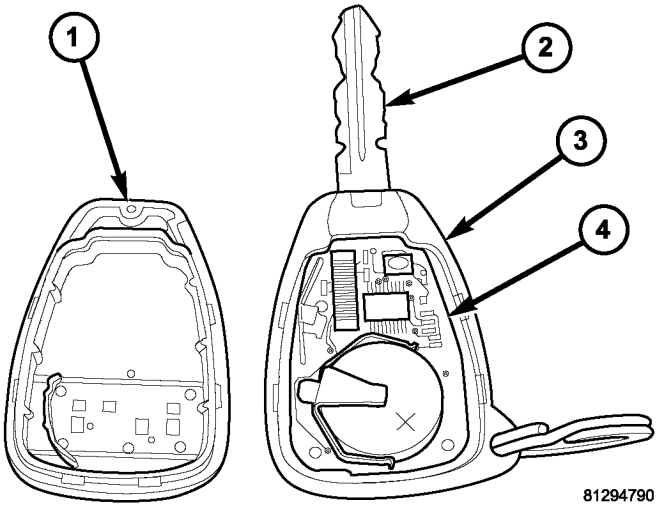

Fig. 15 Sentry Key Immobilizer Transponder

1 - COVER
2 - IGNITION KEY
3 - TRANSMITTER
4 - CIRCUIT BOARD

Each ignition key used in the Sentry Key Immobilizer System (SKIS) has an integral transponder chip included on the circuit board beneath the cover of the integral Remote Keyless Entry (RKE) transmitter (Fig. 15). In addition to having to be cut to match the mechanical coding of the ignition lock cylinder and programmed for operation of the RKE system, each new Sentry Key has a unique transponder identification code that is permanently programmed into it by the manufacturer, and which must be programmed into the Sentry Key REmote Entry Module (SKREEM) to be recognized by the SKIS as a valid key. The Sentry Key transponder cannot be adjusted or repaired. If faulty or damaged, the entire key and RKE transmitter unit must be replaced.

OPERATION

When the ignition switch is turned to the On position, the Sentry Key REmote Entry Module (SKREEM) communicates through its antenna with the Sentry Key transponder using a Radio Frequency (RF) signal. The SKREEM then listens for a RF response from the transponder through the same antenna. The Sentry Key transponder chip is within the range of the SKREEM transceiver antenna ring when it is inserted into the ignition lock cylinder. The SKREEM determines whether a valid key is present in the ignition lock cylinder based upon the response from the transponder. If a valid key is detected, that fact is communicated by the SKREEM to the Powertrain Control Module (PCM) over the Programmable Communications Interface (PCI) data bus, and the PCM allows the engine to continue running. If the PCM receives an invalid key message, or receives no message from the SKREEM over the PCI data bus, the engine will be disabled after about two seconds of operation. The Body Control Module (BCM) will also respond to the invalid key message on the PCI data bus by flashing the security indicator in the ElectroMechanical Instrument Cluster (EMIC) on and off.

Each Sentry Key has a unique transponder identification code permanently programmed into it by the manufacturer. Likewise, the SKREEM has a unique Secret Key code programmed into it by the manufacturer. When a Sentry Key is programmed into the memory of the SKREEM, the SKREEM stores the transponder identification code from the Sentry Key, and the Sentry Key learns the Secret Key code from the SKREEM. Once the Sentry Key learns the Secret Key code of the SKREEM, it is permanently stored in the memory of the transponder. Therefore, once a Sentry Key has been programmed to a particular vehicle, it cannot be used on any other vehicle. (Refer to 8 - ELECTRICAL/VEHICLE THEFT SECURITY - STANDARD PROCEDURE - TRANSPONDER PROGRAMMING).

The Sentry Key Immobilizer System (SKIS) performs a self-test each time the ignition switch is turned to the On position, and will store key-related fault information in the form of a Diagnostic Trouble Code (DTC) in SKREEM memory if a Sentry Key

TRANSPONDER KEY (Continued)

transponder problem is detected. The Sentry Key transponder chip can be diagnosed, and any stored DTC can be retrieved using a diagnostic scan tool. Refer to the appropriate diagnostic information.

WIPERS/WASHERS

TABLE OF CONTENTS

page

WIPERS/WASHERS
DESCRIPTION
FRONT 2
REAR 3
OPERATION
FRONT 5
REAR 7
DIAGNOSIS AND TESTING
FRONT 8
REAR 8
CLEANING
FRONT 10
REAR 10
INSPECTION
FRONT 11
REAR 12
CHECK VALVE
DESCRIPTION 13
OPERATION 13
REMOVAL 13
INSTALLATION 14
REAR WIPER MOTOR
DESCRIPTION 14
OPERATION 15
REMOVAL 15
INSTALLATION 16
WASHER FLUID LEVEL SWITCH
DESCRIPTION 16
OPERATION 17
REMOVAL 17
INSTALLATION 17
WASHER HOSES/TUBES
DESCRIPTION
FRONT 18
REAR 19
OPERATION
FRONT 19
REAR 19
WASHER NOZZLE
DESCRIPTION
FRONT 19
REAR 20
OPERATION
FRONT 20
REAR 20
REMOVAL
FRONT 20
REAR 21
INSTALLATION
FRONT 21
REAR 22
WASHER PUMP/MOTOR
DESCRIPTION 22
OPERATION 22
REMOVAL 23
INSTALLATION 23
WASHER RESERVOIR
DESCRIPTION 24
OPERATION 24
REMOVAL 24
INSTALLATION 25
WIPER ARM
DESCRIPTION
FRONT 26
REAR 27
OPERATION
FRONT 27
REAR 27
REMOVAL
FRONT 28
REAR 28
INSTALLATION
FRONT 29
REAR 29
WIPER ARM PARK RAMP
REMOVAL 30
INSTALLATION 30
WIPER BLADE
DESCRIPTION
FRONT 30
REAR 31
OPERATION
FRONT 31
REAR 31
REMOVAL
FRONT 32
REAR 32
INSTALLATION
FRONT 33
REAR 33
WIPER HIGH/LOW RELAY
DESCRIPTION 33
OPERATION 34
WIPER MODULE
DESCRIPTION 34
OPERATION 35

REMOVAL 35
INSTALLATION 36

WIPER ON/OFF RELAY
DESCRIPTION 36
OPERATION 36

WIPERS/WASHERS

DESCRIPTION

FRONT

An electrically operated intermittent front wiper and washer system is standard factory-installed safety equipment on this model (Fig. 1). The wiper and washer system includes the following major components, which are described in further detail elsewhere in this service information:

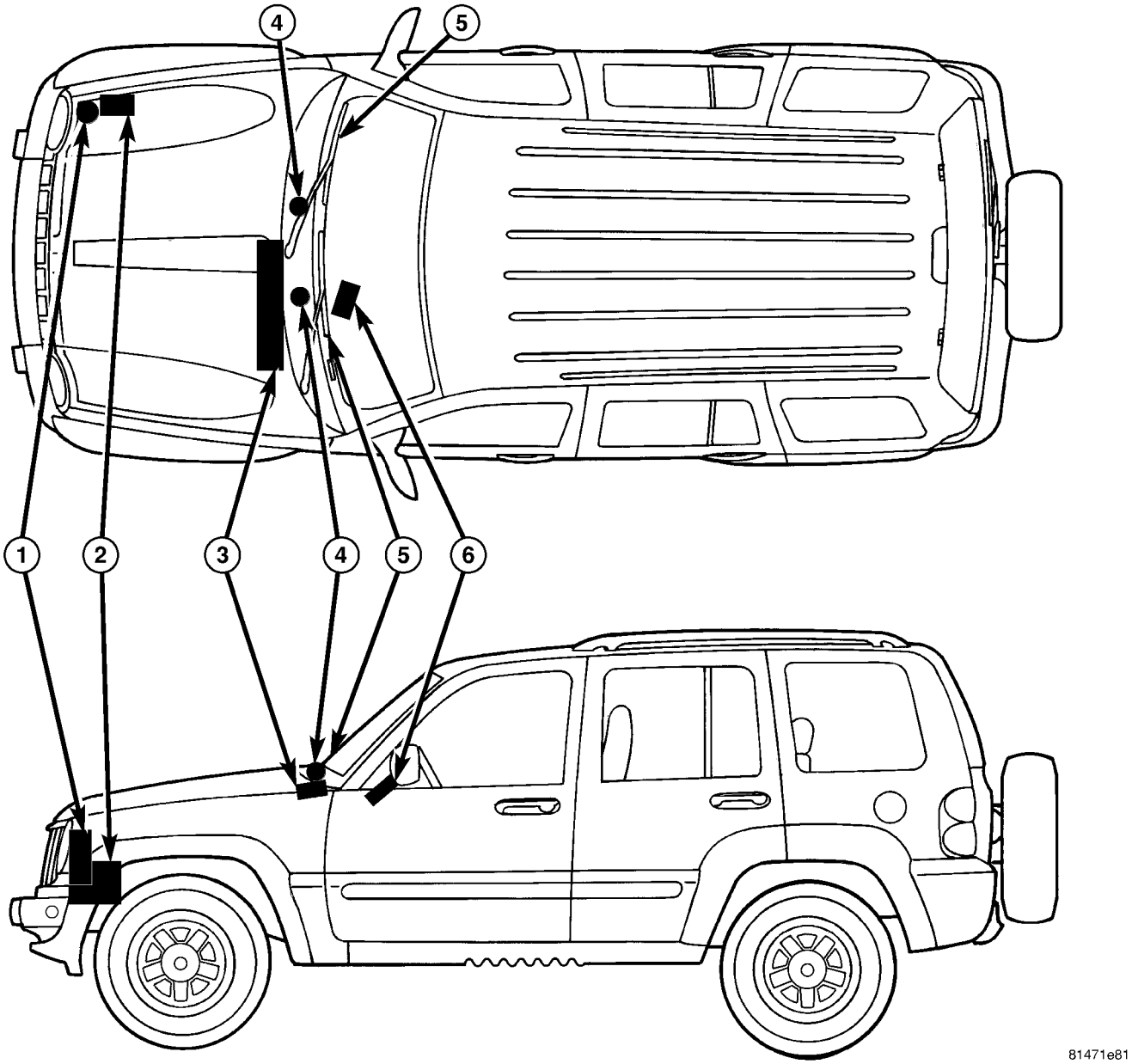

Fig. 1 Front Wiper & Washer System

1 - RESERVOIR FILLER TUBE
2 - WASHER RESERVOIR, PUMP/MOTOR, FLUID LEVEL SWITCH
3 - WIPER MODULE
4 - WASHER NOZZLE (2)
5 - WIPER ARM & BLADE (2)
6 - RIGHT (WIPER) MULTI-FUNCTION SWITCH CONTROL STALK

WIPERS/WASHERS (Continued)

• **Body Control Module** - The Body Control Module (BCM) is located on the Junction Block (JB) under the driver side outboard end of the instrument panel. (Refer to 8 - ELECTRICAL/ELECTRONIC CONTROL MODULES/BODY CONTROL MODULE - DESCRIPTION).

• **Front Check Valve** - The front washer system check valve is integral to the wye fitting located in the washer plumbing between the cowl plenum washer hose and the front washer nozzles, and is concealed beneath the cowl plenum cover/grille panel at the base of the windshield.

• **Front Washer Nozzle** - Two fluidic front washer nozzles are secured by integral latch features to dedicated openings in the cowl plenum cover/grille panel located near the base of the windshield.

• **Front Washer Plumbing** - The plumbing for the washer system consists of rubber hoses and molded plastic fittings. The plumbing is routed along the right side of the engine compartment from the washer reservoir, and through the dash panel into the cowl plenum beneath the cowl plenum cover/grille panel to the washer nozzles.

• **Front Wiper Arm** - The two wiper arms are secured with nuts to the threaded ends of the two wiper pivot shafts, which extend through the cowl plenum cover/grille panel located near the base of the windshield.

• **Front Wiper Blade** - The two wiper blades are secured to the two wiper arms with an integral latch, and are parked on the glass near the bottom of the windshield when the wiper system is not in operation.

• **Front Wiper Module** - The wiper pivot shafts are the only visible components of the front wiper module. The remainder of the module is concealed within the cowl plenum area beneath the cowl plenum cover/grille panel. The wiper module includes the wiper module bracket, four rubber-isolated wiper module mounts, the wiper motor, the wiper motor crank arm, the two wiper drive links, and the two wiper pivots.

• **Multi-Function Switch** - The multi-function switch is located on the top of the steering column, just below the steering wheel. The multi-function switch includes a left (lighting) control stalk and a right (wiper) control stalk. The right control stalk is dedicated to providing all of the driver controls for both the front and rear wiper systems. (Refer to 8 - ELECTRICAL/LAMPS/LIGHTING - EXTERIOR/MULTI-FUNCTION SWITCH - DESCRIPTION).

• **Washer Fluid Level Switch** - The washer fluid level switch is located in a dedicated hole near the center of the rearward facing surface of the washer reservoir, behind the right front wheel house splash shield.

• **Washer Pump/Motor** - The reversible electric washer pump/motor unit is located in a dedicated hole on the lower outboard side of the washer reservoir, behind the right front wheel house splash shield. This single reversible washer pump/motor provides washer fluid to either the front or rear washer system plumbing, depending upon the direction of the pump motor rotation.

• **Washer Reservoir** - The washer reservoir is concealed behind the right front wheel house splash shield ahead of the right front wheel. The washer reservoir filler neck is the only visible portion of the reservoir, and it is accessed from the right front corner of the engine compartment.

• **Wiper High/Low Relay** - The wiper high/low relay is an International Standards Organization (ISO) micro relay located in the Power Distribution Center (PDC) in the engine compartment near the battery.

• **Wiper On/Off Relay** - The wiper on/off relay is an International Standards Organization (ISO) micro relay located in the Power Distribution Center (PDC) in the engine compartment near the battery.

Hard wired circuitry connects the front wiper and washer system components to the electrical system of the vehicle. These hard wired circuits are integral to several wire harnesses, which are routed throughout the vehicle and retained by many different methods. These circuits may be connected to each other, to the vehicle electrical system and to the front wiper and washer system components through the use of a combination of soldered splices, splice block connectors, and many different types of wire harness terminal connectors and insulators. Refer to the appropriate wiring information. The wiring information includes wiring diagrams, proper wire and connector repair procedures, further details on wire harness routing and retention, as well as pin-out and location views for the various wire harness connectors, splices and grounds.

REAR

An electrically operated fixed interval intermittent rear wiper and washer system is standard factory-installed equipment on this model (Fig. 2). The rear wiper and washer system includes the following major components, which are described in further detail elsewhere in this service information:

• **Multi-Function Switch** - The multi-function switch is located on the top of the steering column, just below the steering wheel. The multi-function switch includes a left (lighting) control stalk and a right (wiper) control stalk. The right control stalk is dedicated to providing all of the driver controls for both the front and rear wiper systems. (Refer to 8 -

WIPERS/WASHERS (Continued)

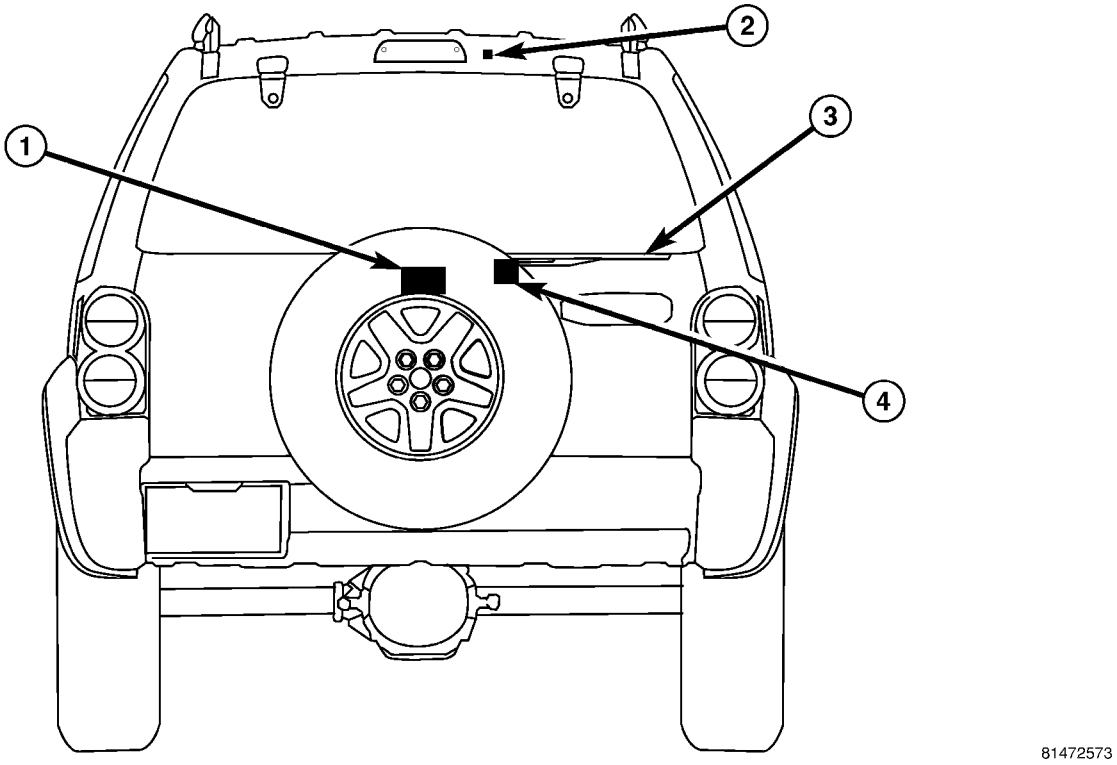

Fig. 2 Rear Wiper & Washer System

1 - REAR WIPER MODULE
2 - REAR WASHER NOZZLE
3 - REAR WIPER ARM & BLADE
4 - PARK RAMP

ELECTRICAL/LAMPS/LIGHTING - EXTERIOR/ MULTI-FUNCTION SWITCH - DESCRIPTION).

- **Rear Check Valve** - The rear washer system check valve function is performed by the diaphragm integral to the valve body of the washer pump/motor unit in this model. (Refer to 8 - ELECTRICAL/ FRONT WIPERS/WASHERS/WASHER PUMP/MOTOR - DESCRIPTION).
- **Rear Washer Nozzle** - A fluidic rear washer nozzle is secured by a latch feature to a mounting hole in the roof outer panel above the rear flip-up glass opening.
- **Rear Washer Plumbing** - The plumbing for the rear washer system consists of rubber hoses and molded plastic fittings. The plumbing is routed along the right side of the engine compartment from the washer reservoir, through the dash into the passenger compartment, up the right cowl side and A-pillar to the headliner, and above the headliner to the rear washer nozzle on the rear roof header.
- **Rear Wiper Arm** - The single rear wiper arm is secured by a nut directly to the rear wiper motor output shaft, which extends through the center of the tailgate outer panel near the base of the rear flip-up glass.
- **Rear Wiper Arm Park Ramp** - The molded rubber rear wiper arm park ramp is secured with a screw to the tailgate outer panel to the right of the rear wiper motor output shaft bezel. When the rear wiper system is not in operation, the rear wiper arm is parked off of the rear flip-up glass on this ramp so that it will not interfere with or be damaged by the flip-up glass operation.
- **Rear Wiper Blade** - The single rear wiper blade is secured to the rear wiper arm with an integral latch, and is parked off of the rear flip-up glass when the rear wiper system is not in operation.
- **Rear Wiper Module** - The rear wiper motor output shaft is the only visible component of the rear wiper module. The remainder of the module is concealed within the tailgate below the rear flip-up glass opening. The rear wiper module includes the module bracket, the rear wiper motor, and the rear wiper electronic control circuitry.
- **Washer Pump/Motor** - The reversible electric washer pump/motor unit is located in a dedicated hole on the lower outboard side of the washer reservoir, behind the right front wheel house splash shield. This single reversible washer pump/motor provides washer fluid to either the front or rear washer system plumbing, depending upon the direction of the pump motor rotation. (Refer to 8 - ELECTRICAL/FRONT WIPERS/WASHERS/WASHER PUMP MOTOR - DESCRIPTION).

WIPERS/WASHERS (Continued)

- **Washer Reservoir** - The washer reservoir is concealed behind the right front wheel house splash shield ahead of the right front wheel. The washer reservoir filler neck is the only visible portion of the reservoir, and it is accessed from the right front corner of the engine compartment. This single washer reservoir is shared by both the front and rear washer systems. (Refer to 8 - ELECTRICAL/FRONT WIPERS/WASHERS/WASHER RESERVOIR - DESCRIPTION).

Hard wired circuitry connects the rear wiper and washer system components to the electrical system of the vehicle. These hard wired circuits are integral to several wire harnesses, which are routed throughout the vehicle and retained by many different methods. These circuits may be connected to each other, to the vehicle electrical system and to the rear wiper and washer system components through the use of a combination of soldered splices, splice block connectors, and many different types of wire harness terminal connectors and insulators. Refer to the appropriate wiring information. The wiring information includes wiring diagrams, proper wire and connector repair procedures, further details on wire harness routing and retention, as well as pin-out and location views for the various wire harness connectors, splices and grounds.

OPERATION

FRONT

The front wiper and washer system is designed to provide the vehicle operator with a convenient, safe, and reliable means of maintaining visibility through the windshield glass. The various components of this system are designed to convert electrical energy produced by the vehicle electrical system into the mechanical action of the wiper blades to wipe the outside surface of the glass, as well as into the hydraulic action of the washer system to apply washer fluid stored in an on-board reservoir to the area of the glass to be wiped. When combined, these components provide the means to effectively maintain clear visibility for the vehicle operator by removing excess accumulations of rain, snow, bugs, mud, or other minor debris from the outside windshield glass surface that might be encountered while driving the vehicle under numerous types of inclement operating conditions.

The vehicle operator initiates all front wiper and washer system functions with the right (wiper) control stalk of the multi-function switch that extends from the right side of the steering column, just below the steering wheel. Rotating the control knob on the end of the control stalk, selects the Off, Delay, Low, or High front wiper system operating modes. In the Delay mode, the control knob also allows the vehicle operator to select from one of five intermittent wipe Delay intervals. Pulling the right control stalk downwards actuates the momentary front wiper system Mist mode switch, while pulling the right control stalk towards the steering wheel actuates the momentary front washer system switch. The multi-function switch provides hard wired resistor multiplexed inputs to the Body Control Module (BCM) for all of the front wiper system functions, as well as a separate hard wired sense input to the BCM for the front washer system function.

The front wiper and washer system will only operate when the ignition switch is in the Accessory or On positions. Battery current is directed from a B(+) fuse in the Power Distribution Center (PDC) to the wiper and washer system circuit breaker in the Junction Block (JB) through a fused ignition switch output (run-acc) circuit. The automatic resetting circuit breaker then provides battery current through a fused ignition switch output (run-acc) circuit to the wiper high/low relay, the wiper on/off relay, and the park switch within the front wiper motor. A separate fuse in the JB provides battery current through another fused ignition switch output (run-acc) circuit to the multi-function switch. The multi-function switch circuitry uses this battery feed and a ground circuit input to directly control the operation and direction of the reversible electric washer pump/motor unit. The BCM uses low side drivers to control front wiper system operation by energizing or de-energizing the wiper high/low and wiper on/off relays.

The hard wired circuits and components of the front wiper and washer system may be diagnosed and tested using conventional diagnostic tools and procedures. However, conventional diagnostic methods may not prove conclusive in the diagnosis of the Body Control Module (BCM), or the inputs to or outputs from the BCM that control the front wiper and washer system operating modes. The most reliable, efficient, and accurate means to diagnose the BCM, or the BCM inputs and outputs related to the various front wiper and washer system operating modes requires the use of a diagnostic scan tool. Refer to the appropriate diagnostic information.

OPERATING MODES

Following are paragraphs that briefly describe the operation of each of the wiper and washer system operating modes.

CONTINUOUS WIPE MODE

When the Low position of the control knob on the right (wiper) control stalk of the multi-function switch is selected, the Body Control Module (BCM) energizes the wiper on/off relay. This directs battery

WIPERS/WASHERS (Continued)

current through the normally open contacts of the energized wiper on/off relay and the normally closed contacts of the de-energized wiper high/low relay to the low speed brush of the front wiper motor, causing the front wipers to cycle at low speed. When the High position of the control knob is selected, the BCM energizes both the wiper on/off relay and the wiper high/low relay. This directs battery current through the normally open contacts of the energized wiper on/off relay and the normally open contacts of the energized wiper high/low relay to the high speed brush of the front wiper motor, causing the front wipers to cycle at high speed.

When the Off position of the control knob is selected, the BCM de-energizes both the wiper on/off and wiper high/low relays, then one of two events will occur. The event that occurs depends upon the position of the wiper blades on the windshield at the moment that the control knob Off position is selected. If the wiper blades are in the down position on the windshield when the Off position is selected, the park switch that is integral to the front wiper motor is closed to ground and the wiper motor ceases to operate.

If the wiper blades are not in the down position on the windshield at the moment the Off position is selected, the park switch is closed to battery current from the fused ignition switch output (run-acc) circuit of the front wiper motor. The park switch directs this battery current to the low speed brush of the wiper motor through the wiper park switch sense circuit and the normally closed contacts of the de-energized wiper on/off and wiper high/low relays. This causes the wiper motor to continue running at low speed until the wiper blades are in the down position on the windshield and the park switch is again closed to ground.

INTERMITTENT WIPE MODE

When the control knob on the right (wiper) control stalk of the multi-function switch is moved to one of the Delay interval positions, the BCM electronic intermittent wipe logic circuit responds by calculating the correct length of time between wiper sweeps based upon the selected delay interval input. The BCM monitors the changing state of the wiper motor park switch through a hard wired front wiper park switch sense circuit input. This input allows the BCM to determine the proper intervals at which to energize and de-energize the wiper on/off relay to operate the front wiper motor intermittently for one low speed cycle at a time.

The BCM logic is also programmed to provide an immediate wipe cycle and begin a new delay interval timing cycle each time a shorter delay interval is selected, and to add the remaining delay timing interval to the new delay interval timing before the next wipe cycle occurs each time a longer delay interval is selected.

MIST WIPE MODE

When the right (wiper) control stalk of the multi-function switch is moved to the momentary Mist position, the BCM energizes the wiper on/off relay for as long as the Mist switch is held closed, then de-energizes the relay when the state of the Mist switch input changes to open. The BCM can operate the front wiper motor in this mode for only one low speed cycle at a time, or for an indefinite number of sequential low speed cycles, depending upon how long the Mist switch is held closed.

WASH MODE

When the right (wiper) control stalk of the multi-function switch is moved to the momentary front Wash position while the control knob is in the Low or High positions, the circuitry within the switch directs battery current and ground to the washer pump/motor unit. This will cause the washer pump/motor unit to be energized for as long as the front Wash switch is held closed, and to de-energize when the front Wash switch is released.

When the right (wiper) control stalk of the multi-function switch is moved to the momentary front Wash position while the control knob is in one of the Delay interval positions, the front washer pump/motor operation is the same. However, the BCM energizes the wiper on/off relay to override the selected delay interval and operate the front wiper motor in a continuous low speed mode for as long as the front Wash switch is held closed, then de-energizes the relay and reverts to the selected delay mode interval several wipe cycles after the front Wash switch is released. The BCM detects the front Wash switch state through a hard wired washer pump driver circuit input from the multi-function switch.

WIPE-AFTER-WASH MODE

When the right (wiper) control stalk of the multi-function switch is moved to the momentary front Wash position while the control knob is in the Off position, the BCM detects that switch state through a hard wired washer pump driver circuit input from the multi-function switch. The BCM responds to this input by energizing the wiper on/off relay for as long as the Wash switch is held closed, then de-energizes the relay several wipe cycles after the front Wash switch is released. The BCM monitors the changing state of the wiper motor park switch through a hard wired front wiper park switch sense circuit input. This input allows the BCM to count the number of wipe cycles that occur after the front Wash switch state changes to open, and to determine the proper

WIPERS/WASHERS (Continued)

interval at which to de-energize the wiper on/off relay to complete the wipe-after-wash mode cycle.

REAR

The rear wiper and washer system is designed to provide the vehicle operator with a convenient, safe, and reliable means of maintaining visibility through the rear flip-up glass. The various components of this system are designed to convert electrical energy produced by the vehicle electrical system into the mechanical action of the wiper blade to wipe the outside surface of the glass, as well as into the hydraulic action of the washer system to apply washer fluid stored in an on-board reservoir to the area of the glass to be wiped. When combined, these components provide the means to effectively maintain clear visibility for the vehicle operator by removing excess accumulations of rain, snow, bugs, mud, or other minor debris from the rear flip-up glass surface that might be encountered while driving the vehicle under numerous types of inclement operating conditions.

The vehicle operator initiates all rear wiper and washer system functions with the right (wiper) control stalk of the multi-function switch that extends from the right side of the steering column, just below the steering wheel. Rotating the control ring on the control stalk to a detent position selects the Off, Delay, or On rear wiper system operating modes. Rotating the control ring on the control stalk to either of two Wash positions actuates the momentary rear washer system switch. The multi-function switch provides hard wired outputs to the rear wiper module and the washer pump/motor unit for all rear wiper and washer system functions.

The rear wiper and washer system will only operate when the ignition switch is in the Accessory or On positions, and the rear flip-up glass and tailgate ajar switches are closed. Battery current is directed from a fuse in the Junction Block (JB) to the multi-function switch through a fused ignition switch output (run-accessory) circuit. The internal circuitry of the right (wiper) control stalk of the multi-function switch then provides battery current signals through a rear wiper on driver circuit and a rear wiper intermittent driver circuit to the rear wiper module and to the Body Control Module (BCM). The BCM uses these rear wiper system inputs as a signal to lock the rear flip-up glass and the tailgate to prevent the rear flip-up glass or tailgate from being opened for as long as the rear wiper is operating. The multi-function switch circuitry also uses this battery current and a ground circuit input to directly control the operation and direction of the reversible electric washer pump/motor unit.

A separate fuse in the JB provides battery current to the electronic control circuitry of the rear wiper module through a fused B(+) circuit. The rear wiper module uses this fused B(+) input to park the rear wiper blade off of the rear flip-up glass if the ignition switch is turned to the Off position while the rear wiper is operating, or if the ignition switch is turned to the Off position before the rear wiper blade has parked. However, if the ignition switch is turned to the Off position while the rear wiper is operating, then turned back On, the rear wiper switch must be cycled to the Off position and back to the On or Delay position before the rear wiper will operate again. In addition, the rear wiper module receives an input from the rear flip-up glass ajar switch on a flip-up glass ajar switch sense circuit, which prevents the rear wiper from operating when the flip-up glass is not closed or fully latched.

The hard wired circuits and components of the rear wiper and washer system may be diagnosed and tested using conventional diagnostic tools and procedures.

OPERATING MODES

Following are paragraphs that briefly describe the operation of each of the rear wiper and washer system operating modes.

CONTINUOUS WIPE MODE

When the On position of the control ring on the right (wiper) control stalk of the multi-function switch is selected, the multi-function switch circuitry directs a battery current signal to the rear wiper module through the rear wiper on driver circuit, causing the rear wiper to cycle continuously at a fixed speed.

INTERMITTENT WIPE MODE

When the Delay position of the control ring on the right (wiper) control stalk of the multi-function switch is selected, the multi-function switch circuitry directs a battery current signal to the rear wiper module through the rear wiper intermittent driver circuit, causing the rear wiper to cycle intermittently at a fixed delay interval.

WASH MODE

When the momentary Wash (after On) position of the control ring on the right (wiper) control stalk of the multi-function switch is selected, the multi-function switch circuitry directs both battery current and ground to the washer pump/motor unit, and a battery current signal to be provided to the rear wiper module through the rear wiper on driver circuit. This will cause the washer pump/motor unit to be energized and the rear wiper to cycle continuously at a fixed speed for as long as the rear Wash switch is held closed.

WIPERS/WASHERS (Continued)

WIPE-AFTER-WASH MODE

When the momentary Wash (before Off) position of the control ring on the right (wiper) control stalk of the multi-function switch is selected, the multi-function switch circuitry directs both battery current and ground to the washer pump/motor unit, and a battery current signal to be provided to the rear wiper module through the rear wiper on driver circuit. This will cause the washer pump/motor unit to be energized and the rear wiper to cycle continuously at a fixed speed for as long as the rear Wash switch is held closed. When the control ring is released to the Off position, the washer pump/motor is de-energized, but the circuitry within the rear wiper module will provide several additional wipe cycles to complete the wipe-after-wash mode cycle.

DIAGNOSIS AND TESTING

FRONT

WARNING: To avoid personal injury or death, on vehicles equipped with airbags, disable the supplemental restraint system before attempting any steering wheel, steering column, airbag, occupant classification system, seat belt tensioner, impact sensor, or instrument panel component diagnosis or service. Disconnect and isolate the battery negative (ground) cable, then wait two minutes for the system capacitor to discharge before performing further diagnosis or service. This is the only sure way to disable the supplemental restraint system. Failure to take the proper precautions could result in accidental airbag deployment.

NOTE: If the front wiper motor operates, but the wipers do not move on the windshield, replace the faulty front wiper module. If the washer pump/motor operates, but no washer fluid is dispensed on the glass; or, if the wipers operate, but chatter, lift, or do not clear the glass, clean and inspect the front wiper and washer system components as required. (Refer to 8 - ELECTRICAL/FRONT WIPERS/WASHERS - CLEANING) and (Refer to 8 - ELECTRICAL/ FRONT WIPERS/WASHERS - INSPECTION).

The hard wired front wiper and washer system circuits and components of the may be diagnosed and tested using conventional diagnostic tools and procedures. Refer to the appropriate wiring information. The wiring information includes wiring diagrams, proper wire and connector repair procedures, details of wire harness routing and retention, connector pinout information and location views for the various wire harness connectors, splices and grounds.

However, conventional diagnostic methods may not prove conclusive in the diagnosis of the Body Control Module (BCM), or the inputs to or outputs from the BCM that provide front wiper and washer system service or many of the electronic features of the front wiper and washer systems. The most reliable, efficient, and accurate means to diagnose the BCM, or the BCM inputs and outputs for the front wiper and washer system requires the use of a diagnostic scan tool. Refer to the appropriate diagnostic information.

REAR

WIPER SYSTEM

WARNING: To avoid personal injury or death, on vehicles equipped with airbags, disable the supplemental restraint system before attempting any steering wheel, steering column, airbag, occupant classification system, seat belt tensioner, impact sensor, or instrument panel component diagnosis or service. Disconnect and isolate the battery negative (ground) cable, then wait two minutes for the system capacitor to discharge before performing further diagnosis or service. This is the only sure way to disable the supplemental restraint system. Failure to take the proper precautions could result in accidental airbag deployment.

NOTE: The diagnosis found here addresses an electrically inoperative rear wiper system. If the rear wiper motor operates, but the wiper does not move on the rear flip-up glass, inspect the mechanical connection between the rear wiper arm and the rear wiper motor output shaft. If OK, replace the faulty rear wiper module. If the wiper operates, but chatters, lifts, or does not clear the glass, clean and inspect the rear wiper system components as required. (Refer to 8 - ELECTRICAL/REAR WIPERS/ WASHERS - CLEANING) and (Refer to 8 - ELECTRICAL/REAR WIPERS/WASHERS - INSPECTION).

(1) Check that the interior lighting switch on the left (lighting) control stalk of the multi-function switch is not in the dome lamp disable position. With all four doors and the tailgate closed, open the rear flip-up glass. The interior lamps should light. Close the rear flip-up glass. Note whether the interior lamps remain lighted. They should turn off after about thirty seconds. If OK, go to Step 2. If not OK, go to Step 9.

(2) Check the fused B(+) fuse (Fuse 17 - 15 ampere) in the Junction Block (JB). If OK, go to Step 3. If not OK, repair the shorted circuit or component as required and replace the faulty fuse.

WIPERS/WASHERS (Continued)

(3) Check for battery voltage at the fused B(+) fuse (Fuse 17 - 15 ampere) in the JB. If OK, go to Step 4. If not OK, repair the open fused B(+) circuit between the JB and the Power Distribution Center (PDC) as required.

(4) Check the fused ignition switch output (run-acc) fuse (Fuse 22 - 10 ampere) in the JB. If OK, go to Step 5. If not OK, repair the shorted circuit or component as required and replace the faulty fuse.

(5) Turn the ignition switch to the On position. Check for battery voltage at the fused ignition switch output (run-acc) fuse (Fuse 22 - 10 ampere) in the JB. If OK, turn the ignition switch to the Off position and go to Step 6. If not OK, repair the open fused ignition switch output (run-acc) circuit between the JB and the ignition switch as required.

(6) Disconnect and isolate the battery negative cable. Disconnect the instrument panel wire harness connector for the multi-function switch (Connector C-2) from the switch connector receptacle. Reconnect the battery negative cable. Turn the ignition switch to the On position. Check for battery voltage at the fused ignition switch output (run-acc) circuit cavity of the instrument panel wire harness connector for the multi-function switch (Connector C-2). If OK, go to Step 7. If not OK, repair the open fused ignition switch output (run-acc) circuit between the multi-function switch and the JB as required.

(7) Turn the ignition switch to the Off position. Disconnect and isolate the battery negative cable. Test the multi-function switch. (Refer to 8 - ELECTRICAL/LAMPS/LIGHTING - EXTERIOR/MULTI-FUNCTION SWITCH - DIAGNOSIS AND TESTING). If the multi-function switch tests OK, reconnect the instrument panel wire harness connectors for the multi-function switch to the switch connector receptacles and go to Step 8. If the multi-function switch does not test OK, replace the faulty switch.

(8) Remove the tailgate inner trim panel. Disconnect the tailgate wire harness connector for the rear wiper module from the module connector receptacle. Check for continuity between the ground circuit cavity of the tailgate wire harness connector for the rear wiper module and a good ground. There should be continuity. If OK, go to Step 9. If not OK, repair the open ground circuit to ground (G303) as required.

(9) Check for continuity between the flip-up glass ajar switch sense circuit cavity of the tailgate wire harness connector for the rear wiper module and a good ground. There should be continuity with the rear flip-up glass open, and no continuity with the rear flip-up glass closed. If OK, go to Step 10. If not OK, repair the open flip-up glass ajar circuit between the rear wiper module and the flip-up glass ajar switch as required.

(10) Reconnect the battery negative cable. Check for battery voltage at the fused B(+) circuit cavity of the tailgate wire harness connector for the rear wiper module. If OK, go to Step 11. If not OK, repair the open fused B(+) circuit between the rear wiper module and the JB as required.

(11) Turn the ignition switch to the On position. Turn the control ring on the right (wiper) control stalk of the multi-function switch to the Delay position. Check for battery voltage at the rear wiper intermittent driver circuit cavity of the tailgate wire harness connector for the rear wiper module. If OK, go to Step 12. If not OK, repair the open rear wiper intermittent driver circuit between the rear wiper module and the multi-function switch as required.

(12) Turn the control ring on the right (wiper) control stalk of the multi-function switch to the On position. Check for battery voltage at the rear wiper on driver circuit cavity of the tailgate wire harness connector for the rear wiper module. If OK, replace the faulty rear wiper module. If not OK, repair the open rear wiper on driver circuit between the rear wiper module and the multi-function switch as required.

WASHER SYSTEM

WARNING: To avoid personal injury or death, on vehicles equipped with airbags, disable the supplemental restraint system before attempting any steering wheel, steering column, airbag, occupant classification system, seat belt tensioner, impact sensor, or instrument panel component diagnosis or service. Disconnect and isolate the battery negative (ground) cable, then wait two minutes for the system capacitor to discharge before performing further diagnosis or service. This is the only sure way to disable the supplemental restraint system. Failure to take the proper precautions could result in accidental airbag deployment.

NOTE: The diagnosis found here addresses an electrically inoperative rear washer system. If the washer pump/motor operates, but no washer fluid is emitted from the rear washer nozzle, be certain to check the fluid level in the reservoir. Also inspect the rear washer system components as required. (Refer to 8 - ELECTRICAL/REAR WIPERS/WASHERS - INSPECTION).

(1) Turn the ignition switch to the On position. Turn the control ring on the right (wiper) control stalk of the multi-function switch to the On position. Check whether the rear wiper system is operating. If OK, go to Step 2. If not OK, test and repair the rear wiper system before continuing with these tests. Refer to WIPER SYSTEM.

WIPERS/WASHERS (Continued)

(2) Pull the right (wiper) control stalk of the multi-function switch toward the steering wheel. Check whether the front washer system is operating. If OK, test the multi-function switch. (Refer to 8 - ELECTRICAL/LAMPS/LIGHTING - EXTERIOR/MULTI-FUNCTION SWITCH - DIAGNOSIS AND TESTING). If the multi-function switch tests OK, go to Step 3. If the multi-function switch does not test OK, replace the faulty switch.

(3) Turn the ignition switch to the Off position. Disconnect and isolate the battery negative cable. Disconnect the headlamp and dash wire harness connector for the washer pump/motor unit from the pump/motor unit connector receptacle. Check for continuity between the washer pump driver circuit cavity of the headlamp and dash wire harness connector for the washer pump/motor unit and a good ground. There should be no continuity. If OK, go to Step 4. If not OK, repair the shorted washer pump driver circuit between the washer pump/motor unit and the multi-function switch as required.

(4) Check for continuity between the washer pump driver circuit cavities of the headlamp and dash wire harness connector for the washer pump/motor unit and the instrument panel wire harness connector for the multi-function switch (Connector C-2). There should be continuity. If OK, go to Step 5. If not OK, repair the open washer pump driver circuit between the washer pump/motor unit and the multi-function switch as required.

(5) Check for continuity between the washer pump sense circuit cavity of the headlamp and dash wire harness connector for the washer pump/motor unit and a good ground. There should be no continuity. If OK, go to Step 6. If not OK, repair the shorted washer pump sense circuit between the washer pump/motor unit and the multi-function switch as required.

(6) Check for continuity between the washer pump sense circuit cavities of the headlamp and dash wire harness connector for the washer pump/motor unit and the instrument panel wire harness connector for the multi-function switch (Connector C-2). There should be continuity. If OK, replace the faulty washer pump/motor unit. If not OK, repair the open washer pump sense circuit between the washer pump/motor unit and the multi-function switch as required.

CLEANING

FRONT

WIPER SYSTEM

The squeegees of wiper blades exposed to the elements for a long time tend to lose their wiping effectiveness. Periodic cleaning of the squeegees is suggested to remove any deposits of salt or road film. The wiper blades, arms, and windshield glass should only be cleaned using a sponge or soft cloth and windshield washer fluid, a mild detergent, or a non-abrasive cleaner. If the wiper blades continue to leave streaks, smears, hazing, or beading on the glass after thorough cleaning of the squeegees and the glass, the entire wiper blade assembly must be replaced.

CAUTION: Protect the rubber squeegees of the wiper blades from any petroleum-based cleaners, solvents, or contaminants. These products can rapidly deteriorate the rubber squeegees.

WASHER SYSTEM

If the washer system is contaminated with foreign material, drain the washer reservoir using a siphon. Remove the washer pump/motor from the reservoir. Clean foreign material from the inside of the washer pump/motor inlet grommet seal/filter screen and flush the washer reservoir using clean washer fluid, a mild detergent, or a non-abrasive cleaner. Flush foreign material from the washer system plumbing by first disconnecting the washer hoses from the washer nozzles, then running the washer pump/motor to run clean washer fluid or water through the system. Plugged or restricted washer nozzles should be carefully back-flushed using compressed air. If the washer nozzle obstruction cannot be cleared, replace the washer nozzle.

CAUTION: Never introduce petroleum-based cleaners, solvents, or contaminants into the washer system. These products can rapidly deteriorate the rubber seals and hoses of the washer system, as well as the rubber squeegees of the wiper blades.

CAUTION: Never use compressed air to flush the washer system plumbing. Compressed air pressures are too great for the washer system plumbing components and will result in further system damage. Never use sharp instruments to clear a plugged washer nozzle or damage to the nozzle orifice and improper nozzle spray patterns will result.

REAR

WIPER SYSTEM

The squeegee of a wiper blade exposed to the elements for a long time tends to lose its wiping effectiveness. Periodic cleaning of the squeegee is suggested to remove any deposits of salt or road film. The wiper blade, arm, and rear flip-up glass should

WIPERS/WASHERS (Continued)

only be cleaned using a sponge or soft cloth and windshield washer fluid, a mild detergent, or a non-abrasive cleaner. If the wiper blade continues to leave streaks, smears, hazing, or beading on the glass after thorough cleaning of the squeegees and the glass, the entire wiper blade assembly must be replaced.

CAUTION: Protect the rubber squeegee of the wiper blade from any petroleum-based cleaners, solvents, or contaminants. These products can rapidly deteriorate the rubber squeegee.

WASHER SYSTEM

If the washer system is contaminated with foreign material, drain the washer reservoir using a siphon. Remove the washer pump/motor from the reservoir. Clean foreign material from the inside of the washer pump/motor inlet grommet seal/filter screen and flush the washer reservoir using clean washer fluid, a mild detergent, or a non-abrasive cleaner. Flush foreign material from the washer system plumbing by first disconnecting the washer hose from the washer nozzle, then running the washer pump/motor to run clean washer fluid or water through the system. A plugged or restricted washer nozzle should be carefully back-flushed using compressed air. If the washer nozzle obstruction cannot be cleared, replace the washer nozzle.

CAUTION: Never introduce petroleum-based cleaners, solvents, or contaminants into the washer system. These products can rapidly deteriorate the rubber seals and hoses of the washer system, as well as the rubber squeegee of the wiper blade.

CAUTION: Never use compressed air to flush the washer system plumbing. Compressed air pressures are too great for the washer system plumbing components and will result in further system damage. Never use sharp instruments to clear a plugged washer nozzle or damage to the nozzle orifice and improper nozzle spray patterns will result.

INSPECTION

FRONT

WIPER SYSTEM

The wiper blades and wiper arms should be inspected periodically, not just when wiper performance problems are experienced. This inspection should include the following points:

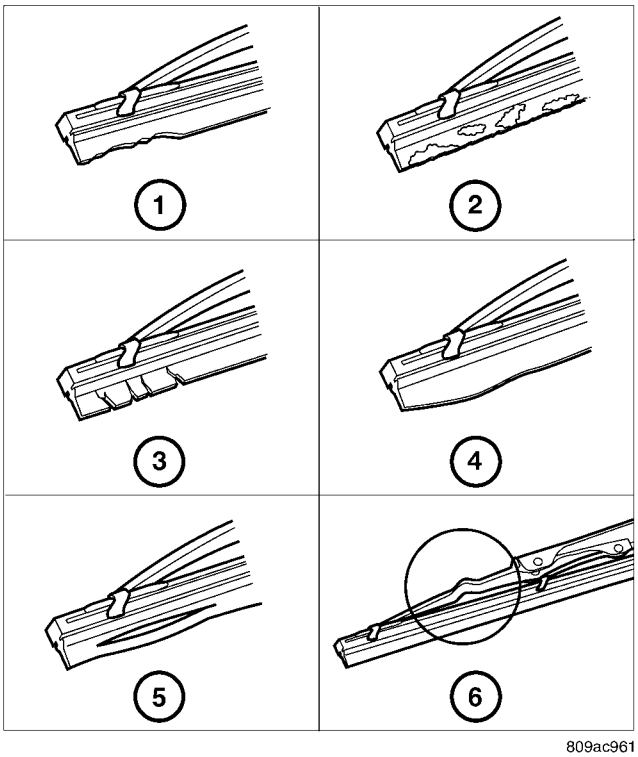

Fig. 3 Wiper Blade Inspection

1 - WORN OR UNEVEN EDGES
2 - ROAD FILM OR FOREIGN MATERIAL DEPOSITS
3 - HARD, BRITTLE, OR CRACKED
4 - DEFORMED OR FATIGUED
5 - SPLIT
6 - DAMAGED SUPPORT COMPONENTS

(1) Carefully inspect the wiper blades (Fig. 3) for any indications of worn or uneven edges, foreign material deposits, hardening or cracking, deformation or fatigue, or splitting. Inspect the wiper blade support components and the wiper arms for damage or corrosion. If the wiper arms and blades are contaminated with any foreign material, clean them and the glass as required. (Refer to 8 - ELECTRICAL/ FRONT WIPERS/WASHERS - CLEANING). If a wiper blade or arm is damaged, or if corrosion is evident, replace the affected wiper arm or blade with a new unit. Do not attempt to repair a wiper arm or blade that is damaged or corroded.

(2) Carefully lift the wiper blade off of the glass. Note the action of the wiper arm hinge. The wiper arm should pivot freely at the hinge, but with no lateral looseness evident. If there is any binding evident in the wiper arm hinge, or there is evident lateral play in the wiper arm hinge, replace the wiper arm.

CAUTION: Do not allow the wiper arm to spring back against the glass without the wiper blade in place or the glass may be damaged.

WIPERS/WASHERS (Continued)

(3) Once proper hinge action of the wiper arm is confirmed, check the hinge for proper spring tension. Remove the wiper blade from the wiper arm. Either place a small postal scale between the blade end of the wiper arm and the glass, or carefully lift the blade end of the arm away from the glass using a small fish scale. Compare the scale readings between the right and left wiper arms. Replace a wiper arm if it has comparatively lower spring tension, as evidenced by a lower scale reading.

(4) After cleaning and inspecting the wiper components and the glass, if the wiper blade still fails to clear the glass without smearing, streaking, chattering, hazing, or beading, replace the wiper blade.

WASHER SYSTEM

The washer system components should be inspected periodically, not just when washer performance problems are experienced. This inspection should include the following points:

(1) Check for ice or other foreign material in the washer reservoir. If contaminated, clean and flush the washer system. (Refer to 8 - ELECTRICAL/ FRONT WIPERS/WASHERS - CLEANING).

(2) Inspect the washer plumbing for pinched, leaking, deteriorated, or incorrectly routed hoses and damaged or disconnected hose fittings. Replace damaged or deteriorated hoses and hose fittings. Leaking washer hoses can sometimes be repaired by cutting the hose at the leak and splicing it back together using an in-line connector fitting. Similarly, sections of deteriorated hose can be cut out and replaced by splicing in new sections of hose using in-line connector fittings. Whenever routing a washer hose or a wire harness containing a washer hose, it must be routed away from hot, sharp, or moving parts. Also, sharp bends that might pinch the washer hose must be avoided.

REAR

WIPER SYSTEM

The rear wiper blade and wiper arm should be inspected periodically, not just when wiper performance problems are experienced. This inspection should include the following points:

(1) Carefully inspect the wiper blade (Fig. 4) for any indications of worn or uneven edges, foreign material deposits, hardening or cracking, deformation or fatigue, or splitting. Inspect the wiper blade support components and the wiper arm for damage. If the wiper arms and blades are contaminated with any foreign material, clean them and the glass as required. (Refer to 8 - ELECTRICAL/REAR WIPERS/ WASHERS - CLEANING). If a wiper blade or arm is damaged, replace the affected wiper blade or arm with a new unit. Do not attempt to repair a wiper arm or blade that is damaged or corroded.

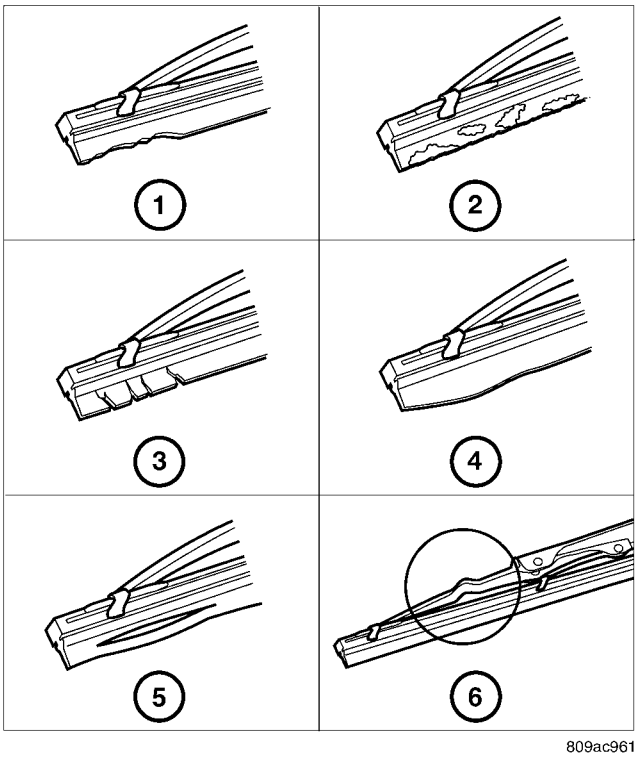

Fig. 4 Wiper Blade Inspection

1 - WORN OR UNEVEN EDGES
2 - ROAD FILM OR FOREIGN MATERIAL DEPOSITS
3 - HARD, BRITTLE, OR CRACKED
4 - DEFORMED OR FATIGUED
5 - SPLIT
6 - DAMAGED SUPPORT COMPONENTS

(2) Carefully lift the wiper blade off of the glass. Note the action of the wiper arm hinge. The wiper arm should pivot freely at the hinge, but with no lateral looseness evident. If there is any binding evident in the wiper arm hinge, or there is evident lateral play in the wiper arm hinge, replace the wiper arm.

CAUTION: Do not allow the wiper arm to spring back against the glass without the wiper blade in place or the glass may be damaged.

(3) Once proper hinge action of the wiper arm is confirmed, check the hinge for proper spring tension. The spring tension of the wiper arm should be sufficient to cause the rubber squeegee to conform to the curvature of the glass. Replace a wiper arm if it has low or no spring tension.

(4) After cleaning and inspecting the wiper components and the glass, if the wiper blade still fails to clear the glass without smearing, streaking, chattering, hazing, or beading, replace the wiper blade.

WIPERS/WASHERS (Continued)

WASHER SYSTEM

The washer system components should be inspected periodically, not just when washer performance problems are experienced. This inspection should include the following points:

(1) Check for ice or other foreign material in the washer reservoir. If contaminated, clean and flush the washer system. (Refer to 8 - ELECTRICAL/ REAR WIPERS/WASHERS - CLEANING).

(2) Inspect the washer plumbing for pinched, leaking, deteriorated, or incorrectly routed hoses and damaged or disconnected hose fittings. Replace damaged or deteriorated hoses and hose fittings. Leaking washer hoses can sometimes be repaired by cutting the hose at the leak and splicing it back together using an in-line connector fitting. Similarly, sections of deteriorated hose can be cut out and replaced by splicing in new sections of hose using in-line connector fittings. Whenever routing a washer hose or a wire harness containing a washer hose, it must be routed away from hot, sharp, or moving parts. Also, sharp bends that might pinch the washer hose must be avoided.

CHECK VALVE

DESCRIPTION

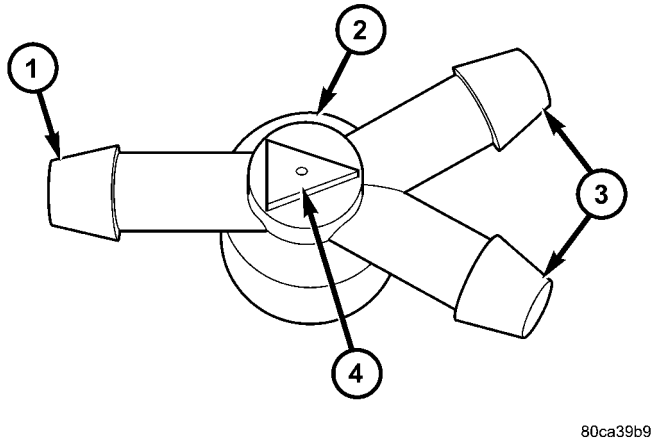

Fig. 5 Front Check Valve

1 - INLET NIPPLE
2 - FRONT CHECK VALVE
3 - OUTLET NIPPLE (2)
4 - FLOW DIRECTION ARROW

A single front washer system check valve is standard equipment on this model, and is installed in the front washer system plumbing (Fig. 5). The front check valve is integral to the front washer nozzle plumbing wye fitting located in the cowl plenum area beneath the cowl plenum cover/grille panel near the base of the windshield. The check valve consists of a molded plastic body with a raised arrowhead molded into its center section that indicates the direction of the flow through the valve, and three barbed hose nipples formed in a wye configuration on the outside circumference of the center section of the valve body. The front check valve cannot be adjusted or repaired and, if faulty or damaged, it must be replaced.

OPERATION

The front check valve provides more than one function in this application. It serves as a wye connector fitting between the cowl grille panel and washer nozzle sections of the front washer supply hose. It prevents washer fluid from draining out of the front washer supply hoses back to the washer reservoir. This drain-back would result in a lengthy delay when the front washer switch is actuated until washer fluid was dispensed through the front washer nozzles, because the washer pump would have to refill the front washer plumbing from the reservoir to the nozzles. Such a drain-back condition could also result in water, dirt, or other outside contaminants being siphoned into the washer system through the washer nozzle orifice. This water could subsequently freeze and plug the nozzle, while other contaminants could interfere with proper nozzle operation and cause improper nozzle spray patterns. In addition, the check valve prevents washer fluid from siphoning through the washer nozzles after the washer system is turned Off.

When the washer pump pressurizes and pumps washer fluid from the reservoir through the washer plumbing, the fluid pressure unseats a diaphragm from over a sump well within the valve by overriding the spring pressure applied to it by a piston (Fig. 6). With the diaphragm unseated, washer fluid is allowed to flow toward the two washer nozzles. When the washer pump stops operating, the spring pressure on the piston seats the diaphragm over the sump well in the valve and fluid flow in either direction within the washer plumbing is prevented. The check valve cannot be adjusted or repaired and, if faulty or damaged, it must be replaced.

REMOVAL

(1) Unlatch and open the hood.

(2) Remove both front wiper arms from the wiper pivots. (Refer to 8 - ELECTRICAL/WIPERS/WASHERS - FRONT/FRONT WIPER ARM - REMOVAL).

(3) Remove the cowl plenum cover/grille panel from over the cowl plenum. (Refer to 23 - BODY/EXTERIOR/COWL GRILLE - REMOVAL).

(4) From the underside of the cowl plenum cover/ grille panel, disconnect the cowl plenum and washer nozzle hoses from the three barbed nipples of the front check valve (Fig. 7).

CHECK VALVE (Continued)

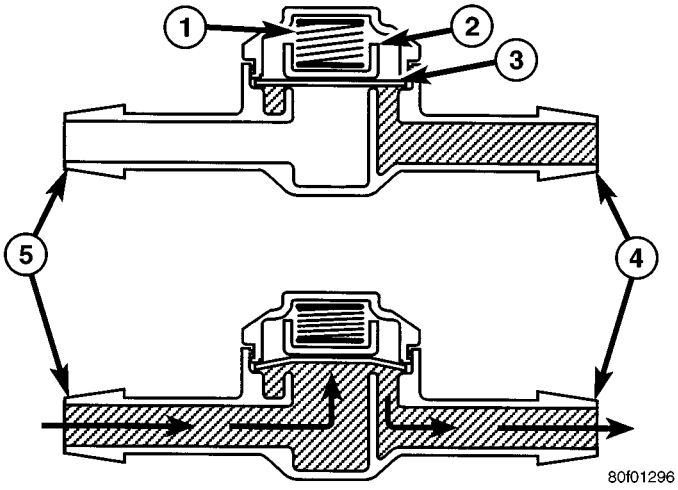

Fig. 6 Front Check Valve

1 - SPRING
2 - PISTON
3 - DIAPHRAGM
4 - TO WASHER NOZZLE
5 - FROM WASHER PUMP

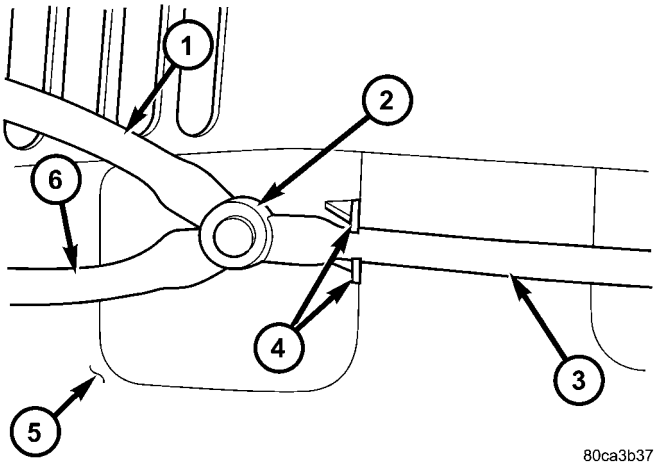

Fig. 7 Front Check Valve Remove/Install

1 - WASHER NOZZLE HOSE (RIGHT)
2 - FRONT CHECK VALVE
3 - COWL PLENUM WASHER HOSE
4 - ROUTING CLIP
5 - COWL GRILLE COVER (UNDERSIDE)
6 - WASHER NOZZLE HOSE (LEFT)

(5) Remove the front check valve from the underside of the cowl plenum cover/grille panel.

INSTALLATION

(1) Position the front check valve to the underside of the cowl plenum cover/grille panel (Fig. 7). Be certain that the flow direction arrow molded into the front check valve body is oriented towards the front washer nozzles.

(2) From the underside of the cowl plenum cover/grille panel, reconnect the cowl plenum and washer nozzle hoses to the three barbed nipples of the front check valve.

(3) Reinstall the cowl plenum cover/grille panel over the cowl plenum. (Refer to 23 - BODY/EXTERIOR/COWL GRILLE - INSTALLATION).

(4) Reinstall both front wiper arms onto the wiper pivots. (Refer to 8 - ELECTRICAL/FRONT WIPERS/WASHERS/FRONT WIPER ARM - INSTALLATION).

(5) Close and latch the hood.

REAR WIPER MOTOR

DESCRIPTION

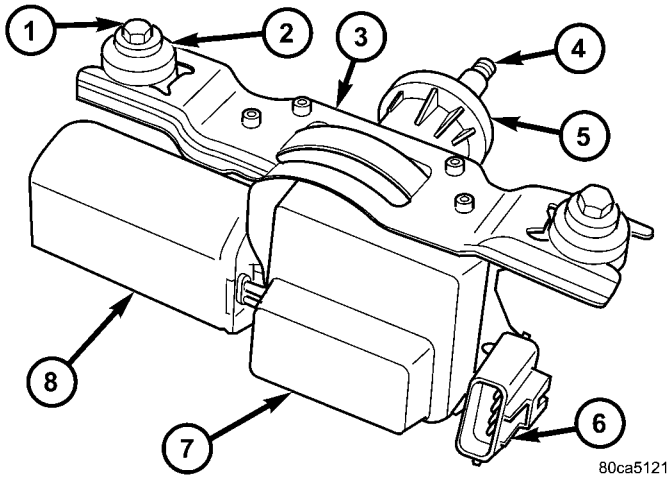

Fig. 8 Rear Wiper Motor

1 - SCREW (2)
2 - INSULATOR (2)
3 - BRACKET
4 - OUTPUT SHAFT
5 - SEAL
6 - CONNECTOR RECEPTACLE
7 - COVER
8 - MOTOR

The rear wiper motor is concealed within the tailgate, below the rear flip-up glass opening and behind the tailgate inner trim panel. The end of the motor output shaft that protrudes through the tailgate outer panel to drive the rear wiper arm and blade is the only visible component of the rear wiper motor (Fig. 8). A rubber gasket, a bezel, and a nut secure and seal the motor output shaft to the tailgate outer panel. A molded plastic nut cover snaps onto the bezel to conceal the nut and improve appearance. An integral connector receptacle connects the rear wiper motor to the vehicle electrical system through a dedicated take out and connector of the tailgate wire harness. The rear wiper motor consists of the following major components:

- **Bracket** - The rear wiper motor bracket consists of a stamped steel mounting plate for the wiper

REAR WIPER MOTOR (Continued)

motor that is secured with screws through two rubber insulators to the tailgate inner panel.

- **Rear Wiper Module** - The rear wiper motor electronic controls are concealed beneath a molded plastic cover and includes the rear wiper system electronic logic and rear wiper motor electronic controls.
- **Motor** - The permanent magnet rear wiper motor is secured with screws to the rear wiper motor bracket. The wiper motor includes an integral transmission, and the motor output shaft.

The rear wiper motor cannot be adjusted or repaired. If any component of the motor is faulty or damaged, the entire rear wiper motor unit must be replaced. The motor output shaft gasket, bezel, nut, and nut cover are available for individual service replacement.

OPERATION

The rear wiper motor receives non-switched battery current through a fuse in the Junction Block (JB) on a fused B(+) circuit and is connected to ground at all times. The rear wiper motor operation is controlled by the vehicle operator through battery current signal inputs received by the rear wiper motor electronic control module from the rear wiper switch circuitry that is integral to the right (wiper) control stalk of the multi-function switch on the steering column. The module also receives an external control input from the flip-up glass ajar switch sense circuit. If the rear wiper module senses that the flip-up glass is ajar, it will not allow the rear wiper motor to operate.

The rear wiper module electronic control logic uses these inputs, its internal inputs, and its programming to provide a continuous wipe mode, an intermittent wipe mode, a wipe-after-wash mode, and off-the-glass wiper blade parking. The wiper blade cycling is controlled by the internal electronic controls of the module. The module controls current flow to the wiper motor brushes and provides an electronic speed control that speeds the wiper blade near the center of the glass, but slows the wiper blade during directional reversals at each end of the wipe pattern and during wiper blade off-the-glass parking for quieter operation.

The wiper motor transmission converts the rotary output of the wiper motor to the back and forth wiping motion of the rear wiper arm and blade on the rear flip-up glass. The rear wiper motor may be diagnosed using conventional diagnostic tools and methods.

REMOVAL

(1) Disconnect and isolate the battery negative cable.

(2) Remove the rear wiper arm from the rear wiper motor output shaft. (Refer to 8 - ELECTRICAL/REAR WIPERS/WASHERS/REAR WIPER ARM - REMOVAL).

(3) Using a small thin-bladed tool, gently pry at the notch in the base of the rear wiper motor output shaft bezel to unsnap the nut cover from the bezel (Fig. 9). **Be certain to take proper precautions to protect the outer tailgate panel and its paint finish from damage during this procedure.**

(4) Remove the nut that secures the rear wiper motor output shaft to the outer swing gate panel (Fig. 9).

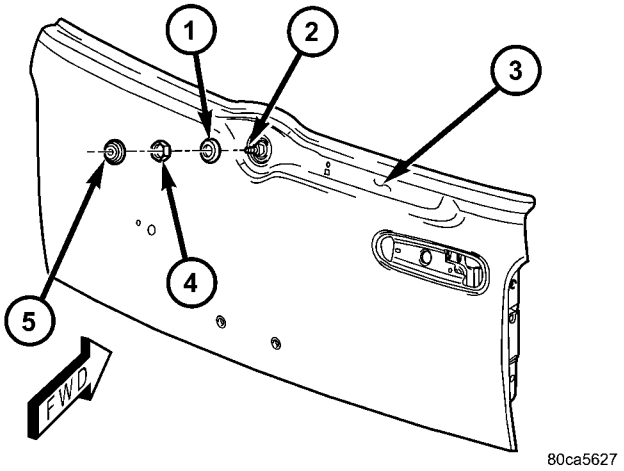

Fig. 9 Rear Wiper Motor Output Shaft Nut Remove/ Install

1 - BEZEL AND GASKET
2 - OUTPUT SHAFT
3 - TAILGATE OUTER PANEL
4 - NUT
5 - NUT COVER

(5) Remove the bezel and gasket from the rear wiper motor output shaft.

(6) Remove the trim panel from the tailgate inner panel. (Refer to 23 - BODY/SWING GATE/TRIM PANEL - REMOVAL).

(7) Disconnect the tailgate wire harness connector for the flip-up glass ajar switch from the flip-up glass latch connector receptacle.

(8) Disconnect the tailgate wire harness connector for the rear wiper motor from the motor connector receptacle (Fig. 10).

(9) Loosen the two screws that secure the rear wiper motor mounting bracket to the top of the tailgate inner panel.

(10) Slide the rear wiper motor and mounting bracket forward far enough to disengage the two mounting screws from the keyed slots in the top of the tailgate inner panel.

(11) Remove the rear wiper motor and mounting bracket from the tailgate as a unit.

REAR WIPER MOTOR (Continued)

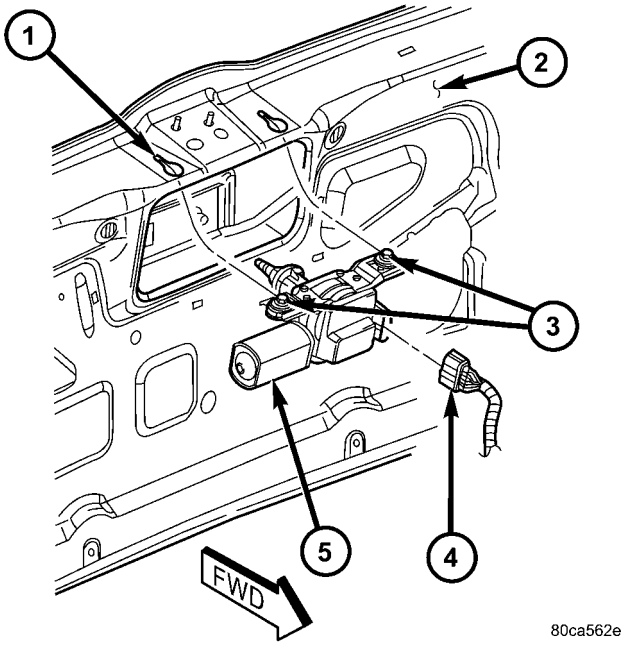

Fig. 10 Rear Wiper Motor Remove/Install

1 - KEYED SLOT (2)
2 - SWING GATE INNER PANEL
3 - SCREW (2)
4 - REAR WIPER MOTOR ELECTRICAL CONNECTOR
5 - REAR WIPER MOTOR

INSTALLATION

(1) Position the rear wiper motor and bracket into the tailgate as a unit (Fig. 10).

(2) Insert the rear wiper motor output shaft through the hole in the tailgate outer panel and engage the two mounting screws into the keyed slots in the top of tailgate inner panel.

(3) From the outside of the tailgate, center the rear wiper motor output shaft in the tailgate outer panel clearance hole and install the gasket and bezel over the centered shaft (Fig. 9).

(4) Install and tighten the nut that secures the rear wiper motor output shaft to the outer tailgate panel. Tighten the nut to 5 N·m (43 in. lbs.).

(5) From the inside of the tailgate, tighten the two screws that secure the rear wiper motor mounting bracket to the top of the tailgate inner panel. Tighten the screws to 6 N·m (57 in. lbs.).

(6) Reconnect the tailgate wire harness connector for the rear wiper motor to the motor connector receptacle.

(7) Reconnect the tailgate wire harness connector for the flip-up glass ajar switch to the flip-up glass latch connector receptacle.

(8) Reinstall the trim panel onto the tailgate inner panel. (Refer to 23 - BODY/SWING GATE/TRIM PANEL - INSTALLATION).

(9) From the outside of the tailgate, press the nut cover firmly and evenly over the rear wiper motor output shaft bezel using hand pressure until it snaps into place.

(10) Reinstall the rear wiper arm onto the rear wiper motor output shaft. (Refer to 8 - ELECTRICAL/REAR WIPERS/WASHERS/REAR WIPER ARM - INSTALLATION).

(11) Reconnect the battery negative cable.

WASHER FLUID LEVEL SWITCH

DESCRIPTION

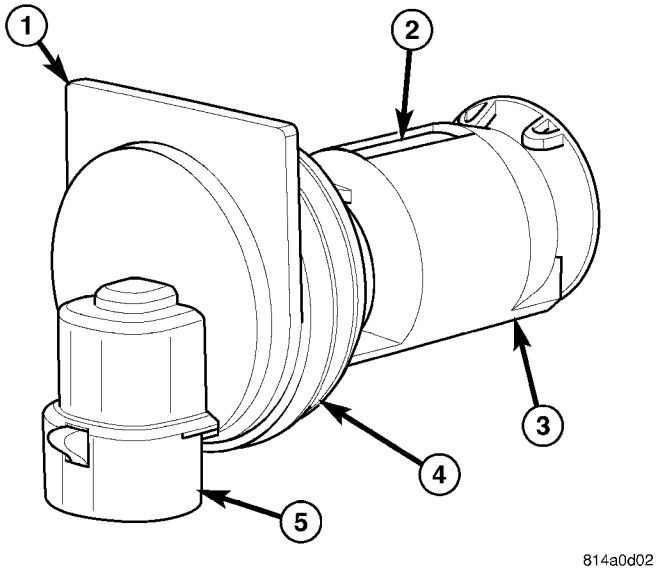

Fig. 11 Washer Fluid Level Switch

1 - MOUNTING FLANGE
2 - MAGNET
3 - FLOAT
4 - BARBED NIPPLE
5 - CONNECTOR RECEPTACLE

The washer fluid level switch is a single pole, single throw reed-type switch mounted just above the sump area near the bottom of the washer reservoir (Fig. 11). Only the molded plastic switch mounting flange and the integral connector receptacle are visible when the switch is installed in the reservoir. A short nipple formation extends from the inner surface of the switch mounting flange, and a barb on the nipple near the switch mounting flange is pressed through a rubber grommet seal installed in the mounting hole of the reservoir.

A molded plastic float rides saddle-like over a molded plastic beam that extends axially from the switch mounting flange. A small permanent magnet is secured in a receptacle on the top of the float, and the reed switch is concealed within the beam. A diag-

WASHER FLUID LEVEL SWITCH (Continued)

nostic resistor is connected between the two switch terminals within the switch mounting flange. The washer fluid level switch cannot be adjusted or repaired. If faulty or damaged, the switch must be replaced.

OPERATION

The washer fluid level switch uses a float to monitor the level of the washer fluid in the washer reservoir. The float contains a small magnet. When the float moves, the proximity of this magnet to a stationary reed switch within the beam formation of the switch changes. When the fluid level in the washer reservoir is at or above the float level, the float rises and the influence of the float magnetic field is removed from the reed switch causing the normally open reed switch contacts to open. When the fluid level in the washer reservoir falls below the level of the float, the float falls and the influence of the float magnetic field is applied to the reed switch, causing the contacts of the normally open reed switch to close.

The washer fluid level switch is connected to the vehicle electrical system through a dedicated take out and connector of the headlamp and dash wire harness. The switch is connected in series between ground and the washer fluid switch sense input to the ElectroMechanical Instrument Cluster (EMIC). The switch receives a path to ground at all times through another take out of the headlamp and dash wire harness with a single eyelet terminal connector that is secured under a ground screw near the front of the left front fender inner shield in the engine compartment. When the switch closes, the EMIC senses the ground on the washer fluid switch sense circuit. The EMIC is programmed to respond to this input by illuminating the washer fluid indicator and by sounding an audible chime tone warning.

The washer fluid level switch input to the EMIC may be diagnosed using conventional diagnostic tools and methods. (Refer to 8 - ELECTRICAL/INSTRUMENT CLUSTER/WASHER FLUID INDICATOR - DIAGNOSIS AND TESTING).

REMOVAL

NOTE: The washer fluid level switch can be removed from the washer reservoir without removing the reservoir from the vehicle.

(1) Disconnect and isolate the battery negative cable.

(2) Siphon the washer fluid from the washer reservoir into a clean container for reuse.

(3) Turn the steering wheel to move the front wheels to the full right position.

(4) Raise and support the vehicle.

(5) Remove the plastic push-in fasteners that secure the forward end of the front wheelhouse splash shield to the inner fender panel and the front fascia. (Refer to 23 - BODY/EXTERIOR/FRONT WHEELHOUSE SPLASH SHIELD - REMOVAL).

(6) Pull the forward end of the front wheelhouse splash shield away from the inner fender panel and front fascia far enough to access the washer fluid level switch for service.

(7) Disconnect the headlamp and dash wire harness connector for the washer fluid level switch from the switch connector receptacle (Fig. 12).

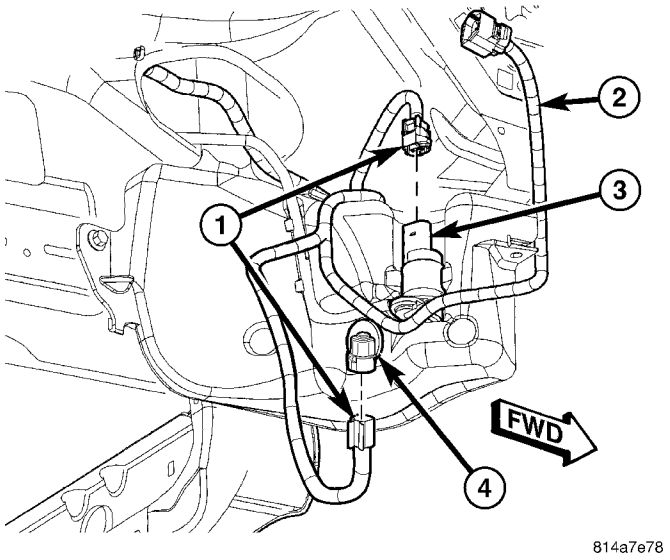

Fig. 12 Washer Fluid Level Switch Remove/Install

1 - CONNECTOR (2)
2 - WIRE HARNESS
3 - WASHER PUMP/MOTOR
4 - WASHER FLUID LEVEL SWITCH

(8) Using a trim stick or another suitable wide flat-bladed tool, gently pry the barbed nipple of the washer fluid level switch out of the rubber grommet seal on the reservoir just above the sump. Care must be taken not to damage the reservoir.

(9) Remove the washer fluid level switch from the washer reservoir.

(10) Remove the rubber grommet seal from the washer fluid level switch mounting hole in the washer reservoir and discard.

INSTALLATION

(1) Install a new rubber grommet seal into the washer fluid level switch mounting hole in the washer reservoir. Always use a new rubber grommet seal on the reservoir.

(2) Insert the float of the washer fluid level switch through the rubber grommet seal and into the washer reservoir. The connector receptacle of the

WASHER FLUID LEVEL SWITCH (Continued)

washer fluid level switch should be pointed downward.

(3) Using hand pressure, press firmly and evenly on the washer fluid level switch mounting flange until the barbed nipple is fully seated in the rubber grommet seal in the washer reservoir mounting hole.

(4) Reconnect the headlamp and dash wire harness connector for the washer fluid level switch to the switch connector receptacle (Fig. 12).

(5) Reposition the forward end of the front wheelhouse splash shield to the inner fender panel and the front fascia.

(6) Reinstall the plastic push-in fasteners that secure the front wheelhouse splash shield to the inner fender panel and the front fascia. (Refer to 23 - BODY/EXTERIOR/FRONT WHEELHOUSE SPLASH SHIELD - INSTALLATION).

(7) Lower the vehicle.

(8) Reconnect the battery negative cable.

(9) Refill the washer reservoir with the washer fluid siphoned from the reservoir during the removal procedure.

WASHER HOSES/TUBES

DESCRIPTION

FRONT

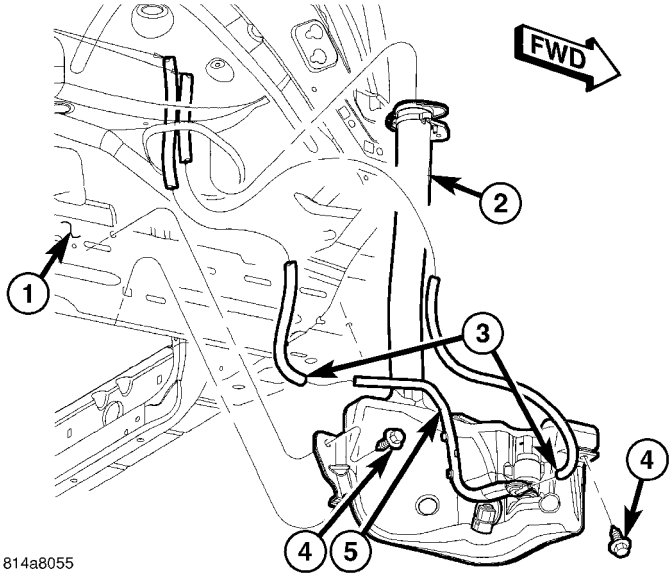

Fig. 13 Reservoir Washer Hose

1 - RIGHT FRONT WHEEL HOUSE
2 - WASHER RESERVOIR
3 - ENGINE COMPARTMENT WASHER HOSE
4 - SCREW (2)
5 - RESERVOIR REAR WASHER HOSE

The front washer plumbing consists of a small diameter rubber hose that is routed from the barbed outlet nipple of the reversible electric washer pump/motor unit on the washer reservoir and along the reservoir filler neck into the engine compartment (Fig. 13). Within the engine compartment, the front washer hose is routed side by side with the engine compartment rear washer hose along the top of the right front fender wheel house to the dash panel. Molded plastic routing clips secure the hoses to the headlamp and dash wire harness in the engine compartment (Fig. 14).

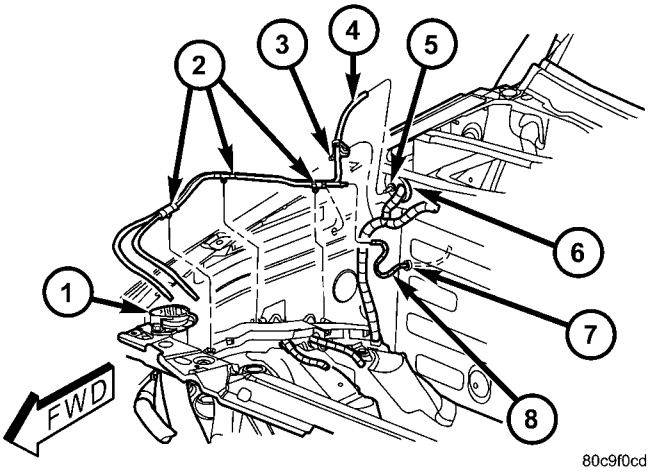

Fig. 14 Engine Compartment Washer Hose

1 - RESERVOIR FILLER CAP
2 - ROUTING CLIP (3)
3 - ROUTING CLIP (1)
4 - FRONT WASHER HOSE
5 - IN-LINE HOSE FITTING
6 - PLENUM PANEL GROMMET
7 - DASH PANEL GROMMET
8 - REAR WASHER HEADLINER HOSE

The front washer hose is connected in the engine compartment to the barbed nipple of a molded plastic in-line fitting installed through a rubber grommet in a hole in the right side of the dash plenum panel. The barbed nipple of the in-line fitting protrudes through the other side of the rubber grommet into the cowl plenum area, where the cowl plenum washer hose joins the front washer hose to the front check valve/wye fitting. The cowl plenum washer hose is routed through integral routing clips on the underside of the cowl plenum cover/grille panel to the molded plastic wye fitting. The cowl plenum washer hose is connected to one nipple on the wye fitting and the two washer nozzle hoses are connected to the other two wye fitting nipples. The washer nozzle hoses are then routed along the underside of the cowl plenum cover/grille panel to the two front washer nozzles.

Washer hose is available for service only as roll stock, which must then be cut to length. The molded

WASHER HOSES/TUBES (Continued)

plastic washer hose fittings cannot be repaired. If these fittings are faulty or damaged, they must be replaced.

REAR

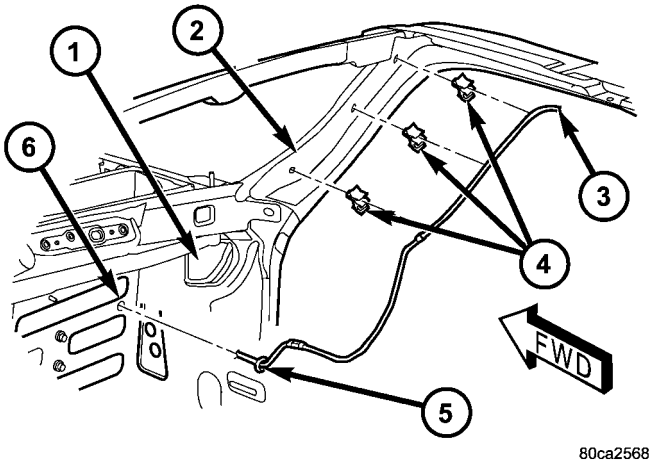

Fig. 15 Rear Washer Headliner Hose

1 - COWL SIDE INNER PANEL
2 - A-PILLAR
3 - HEADLINER HOSE
4 - CLIP (3)
5 - GROMMET
6 - DASH PANEL

The rear washer plumbing consists of small diameter rubber hose routed from the barbed outlet nipple of the reversible electric washer pump/motor unit on the washer reservoir through a trough molded into the reservoir rearward of the washer pump up to the top of the reservoir. Near the base of the reservoir filler neck an in-line plastic fitting connects the reservoir rear washer hose to the engine compartment rear washer hose, which is routed through the reservoir filler neck opening in the front extension of the right front fender wheel house panel in to the engine compartment. The engine compartment rear washer hose is routed side by side with the front washer hose along the top of the right front fender wheel house to the dash panel. Molded plastic routing clips secure the hoses to the headlamp and dash wire harness in the engine compartment.

The engine compartment rear washer hose is connected to the headliner washer hose near the right side of the dash panel with a molded plastic in-line fitting (Fig. 15). The headliner hose has a rubber grommet that allows it to pass through the dash panel from the passenger compartment into the engine compartment. The headliner hose is routed below the instrument panel in the passenger compartment near the right cowl side inner panel. The hose is routed up the right A-pillar to the headliner. Mounting clips secure the hose to the A-pillar. The headliner hose is glued to top of the headliner and routed along the right roof side rail to the rear of the vehicle. At the rear of the vehicle, the headliner hose passes through a hole at the rear portion of the roof rear inner header panel and is connected to the rear washer nozzle.

Washer hose is available for service only as roll stock, which must then be cut to length. The headliner washer hose is integral to the headliner unit and, if faulty or damaged, the headliner unit must be replaced. However, the headliner hose is marked with a white cut line on the A-pillar where the hose should be cut and spliced with a plastic in-line connector fitting to facilitate headliner removal without the need to remove the instrument panel. (Refer to 23 - BODY/INTERIOR/HEADLINER - REMOVAL AND INSTALLATION). The molded plastic washer hose fittings cannot be repaired. If these fittings are faulty or damaged, they must be replaced.

OPERATION

FRONT

Washer fluid in the washer reservoir is pressurized and fed by the washer pump/motor through the front washer system plumbing and fittings to the two front washer nozzles. Whenever routing the washer hose or a wire harness containing a washer hose, it must be routed away from hot, sharp, or moving parts; and, sharp bends that might pinch the hose must be avoided.

REAR

Washer fluid in the washer reservoir is pressurized and fed by the washer pump/motor through the rear washer system plumbing and fittings to the rear washer nozzle located on the roof panel above the rear flip-up glass opening. Whenever routing the washer hose or a wire harness containing a washer hose, it must be routed away from hot, sharp, or moving parts; and, sharp bends that might pinch the hose must be avoided.

WASHER NOZZLE

DESCRIPTION

FRONT

The two front washer nozzles have integral snap features and an anti-rotation tab that secure them in dedicated holes in the cowl plenum cover/grille panel located near the base of the windshield (Fig. 16). The domed upper surface of the washer nozzle is visible on the top of the plenum cover/grille panel, and the

WASHER NOZZLE (Continued)

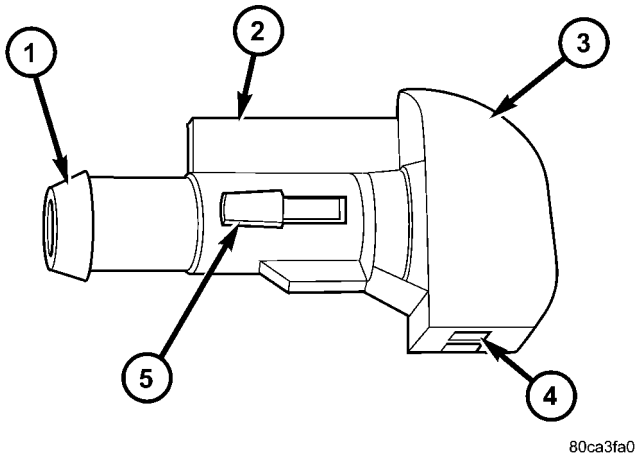

Fig. 16 Front Washer Nozzle

1 - NIPPLE
2 - ANTI-ROTATION TAB
3 - FRONT WASHER NOZZLE
4 - ORIFICE
5 - LATCH (2)

nozzle orifice is oriented towards the windshield glass. The washer plumbing fittings for the washer nozzles are concealed beneath the cowl plenum cover/grille panel. These fluidic washer nozzles are constructed of molded plastic. The cowl plenum cover/grille panel must be removed from the vehicle to access the nozzles for service. The washer nozzles cannot be adjusted or repaired. If faulty or damaged, they must be replaced.

REAR

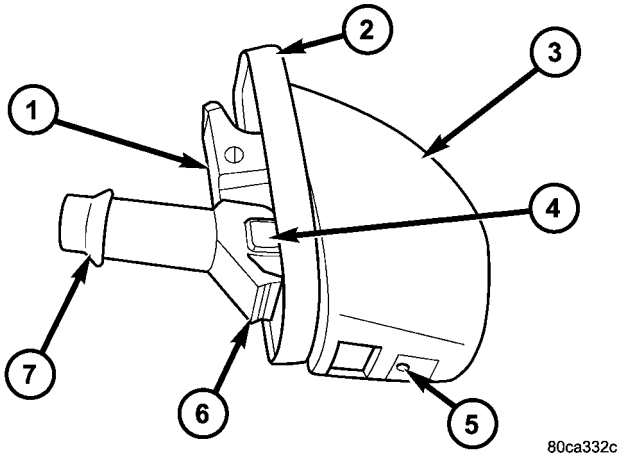

Fig. 17 Rear Washer Nozzle

1 - ENGAGEMENT TAB (TOP)
2 - GASKET
3 - REAR WASHER NOZZLE
4 - ALIGNMENT FEATURE
5 - ORIFICE
6 - LATCH FEATURE (BOTTOM)
7 - NIPPLE

The rear washer nozzle is a fluidic-type unit constructed of molded plastic (Fig. 17). The nozzle is secured by a snap fit in a dedicated mounting hole located in the rear edge of the roof panel above the rear flip-up glass opening and to the right of the Center High Mounted Stop Lamp (CHMSL) unit. A rubber gasket on the back of the nozzle seals the nozzle to the roof panel opening. The back of the nozzle includes an integral alignment feature on the left side, an integral engagement tab on the top, an integral latch feature on the bottom, and the washer plumbing nipple which are all concealed between the outer roof panel and the rear roof inner header. The rear washer nozzle latch feature is a one time component, and will be damaged if the nozzle is removed from its mounting hole for service. The rear washer nozzle cannot be adjusted or repaired. If faulty or damaged, the entire nozzle unit must be replaced.

OPERATION

FRONT

The two front washer nozzles are designed to dispense washer fluid into the wiper pattern area on the outside of the windshield glass. Pressurized washer fluid is fed to each nozzle from the washer reservoir by the washer pump/motor unit through a single hose, which is attached to a barbed nipple on each front washer nozzle below the cowl plenum cover/grille panel. A fluidic matrix within the washer nozzle causes the pressurized washer fluid to be emitted from the nozzle orifice as an oscillating stream to more effectively cover a larger area of the glass to be cleaned.

REAR

The rear washer nozzle is designed to dispense washer fluid into the wiper pattern area on the outside of the rear flip-up glass. Pressurized washer fluid is fed to the nozzle from the washer reservoir by the washer pump/motor through a single hose, which is attached to a barbed nipple on the back of the rear washer nozzle. A fluidic matrix within the washer nozzle causes the pressurized washer fluid to be emitted from the nozzle orifice as an oscillating stream to more effectively cover a larger area of the glass to be cleaned.

REMOVAL

FRONT

(1) Unlatch and open the hood.

(2) Remove both front wiper arms from the wiper pivots. (Refer to 8 - ELECTRICAL/FRONT WIPERS/WASHERS/FRONT WIPER ARM - REMOVAL).

WASHER NOZZLE (Continued)

(3) Remove the cowl plenum cover/grille panel from over the cowl plenum. (Refer to 23 - BODY/EXTERIOR/COWL GRILLE - REMOVAL).

(4) From the underside of the cowl plenum cover/grille panel, disconnect the washer nozzle hose from the barbed nipple of the front washer nozzle (Fig. 18).

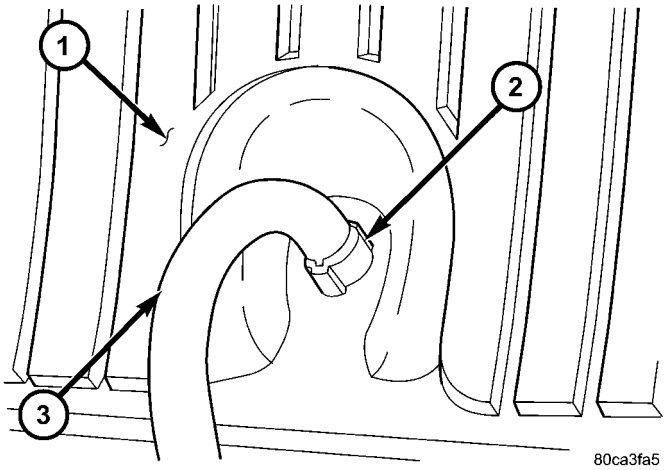

Fig. 18 Front Washer Nozzle Remove/Install

1 - COWL GRILLE COVER (UNDERSIDE)
2 - FRONT WASHER NOZZLE
3 - WASHER NOZZLE HOSE

(5) From the underside of the cowl plenum cover/grille panel, release the integral snap features of the front washer nozzle and push the nozzle out through the mounting hole toward the top side of the cowl plenum cover/grille panel.

(6) Remove the front washer nozzle from the top of the cowl plenum cover/grille panel.

REAR

NOTE: The rear washer nozzle latch feature is a one time component, and will be damaged if the nozzle is removed from its mounting hole for service. If removed from its mounting hole for any reason, the rear washer nozzle must be replaced with a new unit.

(1) Using a trim stick or another suitable wide flat-bladed tool, gently pry the bottom of the rear washer nozzle away from the roof panel until the latch feature at the bottom of the nozzle that secures it in the mounting hole of the roof panel unsnaps.

(2) Pull the rear washer nozzle out from the roof panel far enough to access the washer hose (Fig. 19).

(3) Disconnect the washer hose from the barbed nipple on the back of the rear washer nozzle.

(4) Discard the rear washer nozzle.

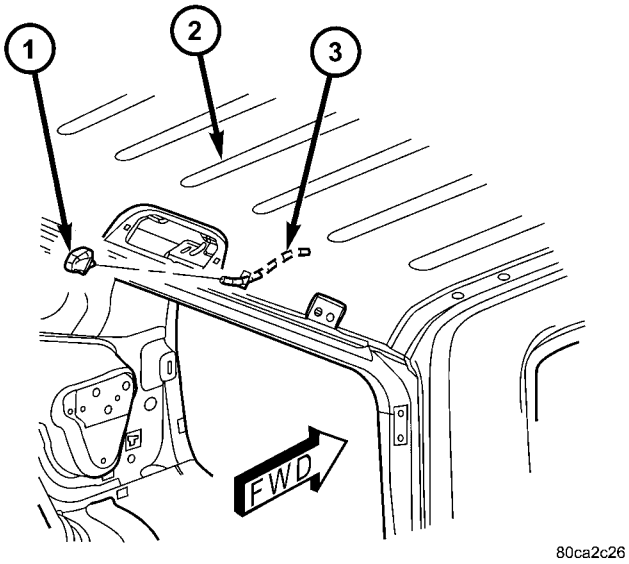

Fig. 19 Rear Washer Nozzle Remove/Install

1 - NOZZLE
2 - ROOF PANEL
3 - HEADLINER HOSE

INSTALLATION

FRONT

(1) From the top of the cowl plenum cover/grille panel, position the nipple end of the front washer nozzle through the mounting hole and engage the anti-rotation tab of the nipple into the anti-rotation notch in the mounting hole.

(2) Push firmly and evenly on the top of the front washer nozzle until the integral snap features lock into place on the underside of the cowl plenum cover/grille panel.

(3) From the underside of the cowl grille cover, reconnect the washer hose to the barbed nipple of the front washer nozzle (Fig. 18).

(4) Reinstall the washer hose for the front washer nozzle into its routing clips on the underside of the cowl plenum cover/grille panel.

(5) Reinstall the cowl plenum cover/grille panel over the cowl plenum. (Refer to 23 - BODY/EXTERIOR/COWL GRILLE - INSTALLATION).

(6) Reinstall both front wiper arms onto the wiper pivots. (Refer to 8 - ELECTRICAL/FRONT WIPERS/WASHERS/FRONT WIPER ARM - INSTALLATION).

(7) Close and latch the hood.

WASHER NOZZLE (Continued)

REAR

NOTE: The rear washer nozzle latch feature is a one time component, and will be damaged if the nozzle is removed from its mounting hole for service. If removed from its mounting hole for any reason, the rear washer nozzle must be replaced with a new unit.

(1) Position the new rear washer nozzle to the roof panel (Fig. 19). Be certain that a new rubber gasket is in position on the back of the nozzle.

(2) Reconnect the washer hose to the barbed nipple on the back of the rear washer nozzle.

(3) Insert the rear washer nozzle supply hose and nipple into the mounting hole in the roof panel and align the nozzle with the hole.

(4) Engage the tab at the top of the nozzle behind the sheet metal at the top of the roof panel mounting hole.

(5) Using hand pressure, press firmly and evenly on the hood of the rear washer nozzle until the lower latch feature snaps into place behind the sheet metal at the bottom of the roof panel mounting hole.

WASHER PUMP/MOTOR

DESCRIPTION

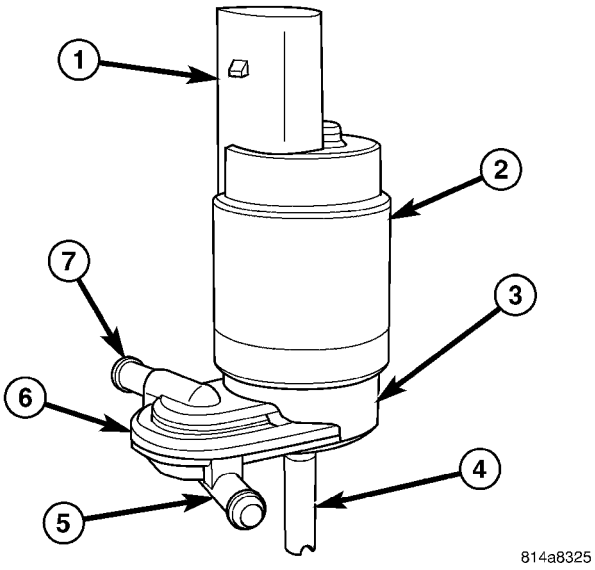

Fig. 20 Washer Pump/Motor

1 - CONNECTOR RECEPTACLE
2 - MOTOR
3 - PUMP
4 - INLET NIPPLE
5 - FRONT WASHER OUTLET NIPPLE
6 - VALVE BODY
7 - REAR WASHER OUTLET NIPPLE

The washer pump/motor unit (Fig. 20) is located on the top of a sump area of the washer reservoir, on the outboard side of the right front frame rail ahead of the right front wheel house splash shield. A small permanently lubricated and sealed reversible electric motor is coupled to the rotor-type washer pump. The use of an integral valve body allows the washer pump/motor unit to provide washer fluid to either the front or the rear washer systems, depending upon the direction of the motor/pump impeller rotation.

An inlet nipple on the bottom of the pump housing passes through a rubber grommet seal/filter screen unit installed in a dedicated mounting hole of the washer reservoir. When the pump is installed in the reservoir the blue barbed outlet nipple on the pump valve body housing connects the unit to the front washer hose and the black barbed outlet nipple connects the unit to the rear washer hose. The number “2” molded into the front pump outlet nipple and the number “1” molded into the rear pump outlet nipple provide further clarification of the nipple assignments.

The washer pump/motor unit is retained on the reservoir by the interference fit between the barbed pump inlet nipple and the grommet seal/filter screen, which is a light press fit. The top of the washer pump is also secured to the washer reservoir by the use of a snap fit into a receptacle molded into the reservoir that allows for mounting of the washer pump without the use of fasteners. An integral connector receptacle on the top of the motor housing connects the unit to the vehicle electrical system through a dedicated take out and connector of the headlamp and dash wire harness. The washer pump/motor unit cannot be repaired. If faulty or damaged, the entire washer pump/motor unit must be replaced.

OPERATION

The washer pump/motor unit features a reversible electric motor. The direction of the motor is controlled by hard wired outputs from the momentary front and rear washer switch circuitry contained within the right (wiper) control stalk of the multifunction switch. When battery current and ground are applied to the two pump motor terminals, the motor rotates in one direction. When the polarity of these connections is reversed, the motor rotates in the opposite direction.

When the pump motor is energized, the rotor-type pump pressurizes the washer fluid and forces it through one of the two pump outlet nipples, and into the front or rear washer plumbing. Washer fluid is taken in from the washer reservoir through the inlet port of the washer pump housing. An integral valve body is located in a housing on the outlet port side of

WASHER PUMP/MOTOR (Continued)

the pump housing. A diaphragm in this valve body controls which washer system plumbing receives the washer fluid being pressurized by the pump. When the pump is not operating the diaphragm is biased to close all washer fluid flow in the rear washer system and, in this way it also performs the function of the rear washer system check valve.

When the pump impeller rotates in the counter-clockwise direction (viewed from the bottom), pressurized washer fluid is pushed out through the pump rear outlet port and moves diaphragm to seal off the front outlet nipple opening the rear washer system outlet and nipple. When the pump impeller rotates in the clockwise direction (viewed from the bottom), the biased diaphragm seals off the rear outlet nipple and pressurized washer fluid is pushed out through the pump front outlet port, then the pressurized washer fluid is pushed out through the front washer outlet nipple.

The washer pump/motor unit may be diagnosed using conventional diagnostic tools and methods.

REMOVAL

NOTE: The washer pump/motor can be removed from the washer reservoir without removing the reservoir from the vehicle.

(1) Disconnect and isolate the battery negative cable.

(2) Siphon the washer fluid from the washer reservoir into a clean container for reuse.

(3) Turn the steering wheel to move the front wheels to the full right position.

(4) Raise and support the vehicle.

(5) Remove the plastic push-in fasteners that secure the forward end of the front wheelhouse splash shield to the inner fender panel and the front fascia. (Refer to 23 - BODY/EXTERIOR/FRONT WHEELHOUSE SPLASH SHIELD - REMOVAL).

(6) Pull the forward end of the front wheelhouse splash shield away from the inner fender panel and front fascia far enough to access the washer pump/motor for service.

(7) Disconnect the two washer hoses from the two washer pump/motor unit outlet nipples.

(8) Disconnect the headlamp and dash wire harness connector from the washer pump/motor unit connector receptacle on the top of the motor housing (Fig. 21).

(9) Firmly grasp the top of the washer pump/motor housing and pull it lightly outward from the washer reservoir far enough to disengage the top of the motor from the receptacle in the reservoir. Care must be taken not to damage the reservoir.

(10) Pull the washer pump/motor unit straight up and out of the washer reservoir far enough to disengage the inlet nipple from the rubber grommet seal/filter screen in the reservoir.

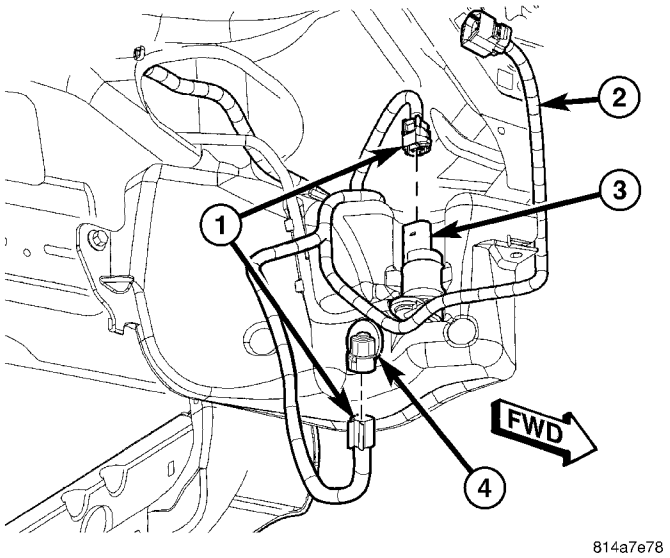

Fig. 21 Washer Pump/Motor Remove/Install

1 - CONNECTOR (2)
2 - WIRE HARNESS
3 - WASHER PUMP/MOTOR
4 - WASHER FLUID LEVEL SWITCH

(11) Remove the rubber grommet seal/filter screen for the washer pump from the pump mounting hole in the washer reservoir and discard.

INSTALLATION

(1) Install a new rubber grommet seal/filter screen unit into the washer pump mounting hole in the washer reservoir. Always use a new rubber grommet seal/filter screen on the reservoir.

(2) Position the inlet nipple of the washer pump to the rubber grommet seal/filter screen in the washer reservoir.

(3) Using hand pressure, press firmly and evenly downward on the washer pump/motor unit until the inlet nipple is fully seated in the rubber grommet seal/filter screen in the pump mounting hole of the reservoir.

(4) Align the top of the washer pump/motor housing with the receptacle in the washer reservoir.

(5) Using hand pressure, press firmly and evenly on the top of washer pump/motor unit until the motor housing snaps into the reservoir receptacle.

(6) Reconnect the headlamp and dash wire harness connector for the washer pump/motor unit to the connector receptacle on the top of the motor housing (Fig. 21).

(7) Reconnect the front and rear washer hoses to the two barbed pump outlet nipples. Be certain that the hose in the trough on the reservoir located behind the pump is connected to the rear (black) nip-

WASHER PUMP/MOTOR (Continued)

ple, and the hose in front of the pump is connected to the front (blue) nipple.

(8) Reposition the forward end of the front wheelhouse splash shield to the inner fender panel and the front fascia.

(9) Reinstall the plastic push-in fasteners that secure the front wheelhouse splash shield to the inner fender panel and the front fascia. (Refer to 23 - BODY/EXTERIOR/FRONT WHEELHOUSE SPLASH SHIELD - INSTALLATION).

(10) Lower the vehicle.

(11) Reconnect the battery negative cable.

(12) Refill the washer reservoir with the washer fluid siphoned from the reservoir during the removal procedure.

WASHER RESERVOIR

DESCRIPTION

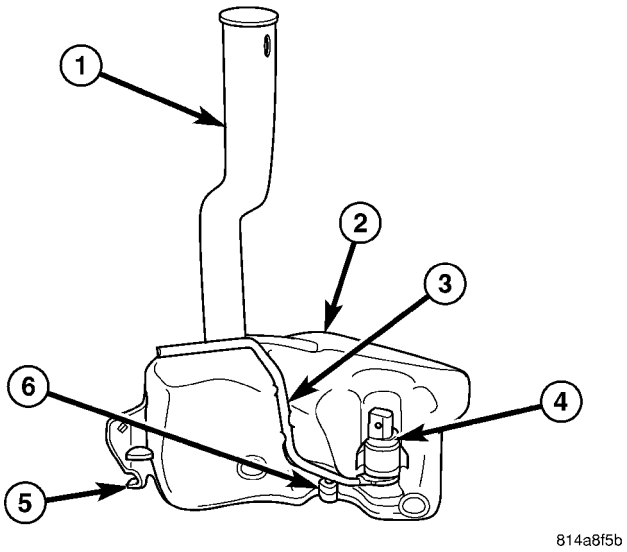

Fig. 22 Washer Reservoir

1 - FILLER NECK
2 - RESERVOIR
3- REAR HOSE TROUGH
4 - WASHER PUMP/MOTOR
5 - HOOK TAB
6 - WASHER FLUID LEVEL SWITCH

A single washer fluid reservoir is used for both the front and rear washer systems (Fig. 22). The molded plastic washer fluid reservoir is mounted on the outboard side of the right front frame rail in front of the right front wheel, where it is concealed by the right front wheel house splash shield. The only visible component of the washer reservoir is the filler neck and cap unit, which extends through a hole in the right front wheel house extension panel into the engine compartment. A bright yellow plastic filler cap with an integral bail strap and filler neck mounting bracket is labeled with an International Control and Display Symbol icon for “Windshield Washer.” The cap snaps over the open end of the filler neck.

There is a dedicated hole in the top of a ledge-like sump area of the reservoir provided for the mounting of the washer pump/motor unit, and another dedicated hole inboard of the pump for the washer fluid level switch. A receptacle molded into the reservoir allows for mounting of the washer pump without the use of fasteners. The reservoir also features an integral rear hose routing trough on its outboard side. The washer reservoir is secured to the outboard side of the right front frame rail by two screws and an integral molded hook tab that engages in a slot in the right front frame rail. A blind rivet secures the reservoir filler neck bracket to the upper radiator crossmember in the front of the engine compartment. The forward end of the right front fender wheel house splash shield must be removed to access the washer reservoir for service.

The washer reservoir cannot be repaired and, if faulty or damaged, it must be replaced. The washer reservoir, the grommet seal/filter screen for the washer pump/motor unit, the grommet seal for washer fluid level switch, and the filler cap are each available for individual service replacement.

OPERATION

The washer fluid reservoir provides a secure, on-vehicle storage location for a large reserve of washer fluid for operation of the front and rear washer systems. The washer reservoir filler neck provides a clearly marked and readily accessible point from which to add washer fluid to the reservoir. The washer/pump motor unit is located in a sump area near the front of the reservoir to be certain that washer fluid will be available to the pump as the fluid level in the reservoir becomes depleted. The washer pump/motor unit is mounted above the lowest position in the sump. The washer fluid level switch is mounted just above the sump area of the reservoir so that there will be adequate warning to the vehicle operator that the washer fluid level is low, before the washer system will no longer operate.

REMOVAL

(1) Disconnect and isolate the battery negative cable.

(2) Siphon the washer fluid from the washer reservoir into a clean container for reuse.

(3) Turn the steering wheel to move the front wheels to the full right position.

(4) Remove the air cleaner housing from the top of the right front fender wheel house. (Refer to 9 -

WASHER RESERVOIR (Continued)

ENGINE/AIR INTAKE SYSTEM/AIR CLEANER ELEMENT - REMOVAL).

(5) Remove the blind rivet that secures the washer reservoir filler neck support bracket to the upper radiator crossmember (Fig. 23).

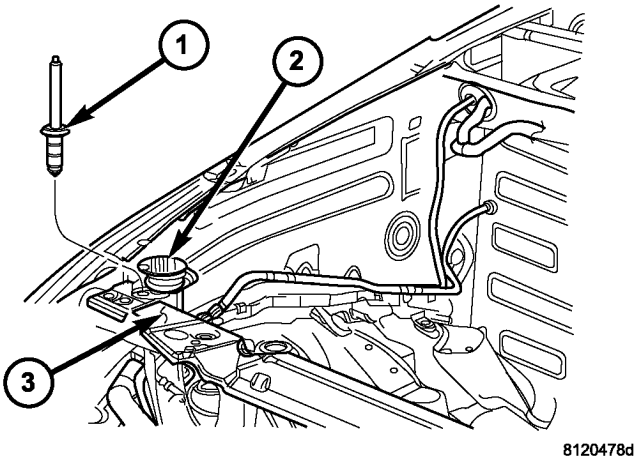

Fig. 23 Washer Reservoir Cap Remove/Install

1 - BLIND RIVET (1)
2 - CAP
3 - UPPER RADIATOR CROSSMEMBER

(6) Raise and support the vehicle.

(7) Remove the plastic push-in fasteners that secure the forward end of the front wheelhouse splash shield to the inner fender panel and the front fascia. (Refer to 23 - BODY/EXTERIOR/FRONT WHEELHOUSE SPLASH SHIELD - REMOVAL).

(8) Pull the forward end of the front wheelhouse splash shield away from the inner fender panel and front fascia far enough to access the washer reservoir for service.

(9) Disconnect the headlamp and dash wire harness connector for the washer pump/motor unit from the connector receptacle on the top of the motor housing (Fig. 24).

(10) Disconnect the headlamp and dash wire harness connector for the washer fluid level switch from the switch connector receptacle.

(11) Disconnect the two washer hoses from the two washer pump/motor unit outlet nipples (Fig. 25).

(12) Disengage the rear washer hose from the integral washer reservoir trough.

(13) Remove the two screws that secure the washer reservoir to the right front frame rail.

(14) Disengage the hook tab at the back of the washer reservoir from the slot in the right front frame rail.

(15) Lower the washer reservoir far enough for the filler neck to be removed from the clearance hole in the right front fender wheel house panel extension.

(16) Remove the washer reservoir from the right front fender wheel house.

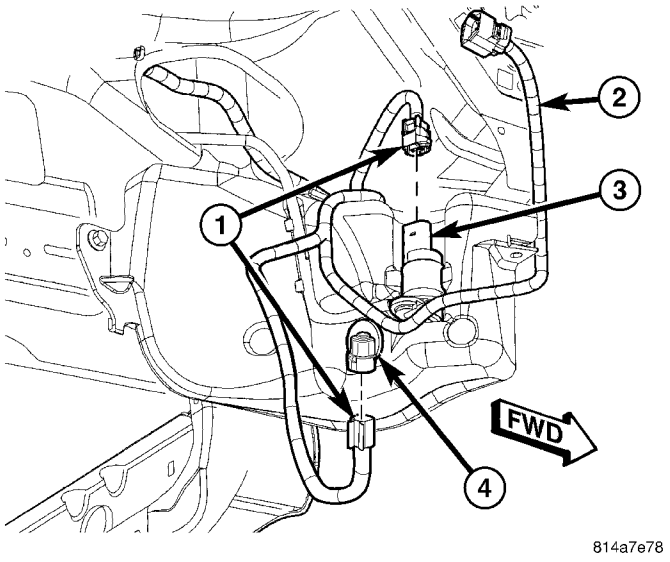

Fig. 24 Washer Reservoir Connections

1 - CONNECTOR (2)
2 - WIRE HARNESS
3 - WASHER PUMP/MOTOR
4 - WASHER FLUID LEVEL SWITCH

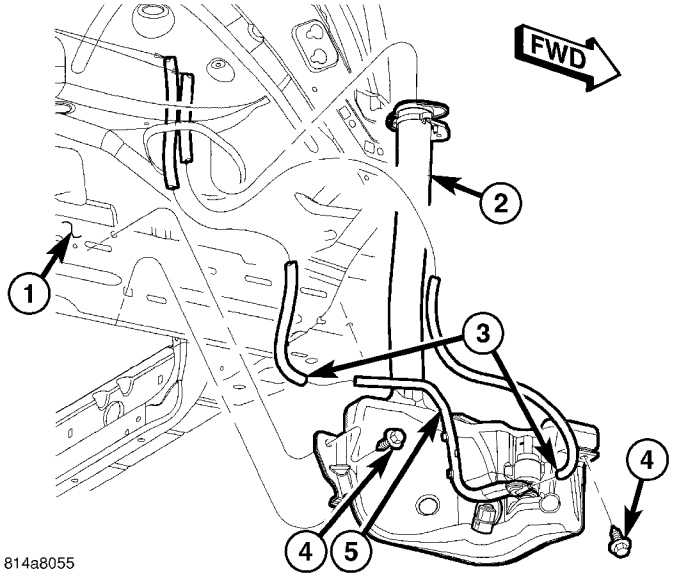

Fig. 25 Washer Reservoir Remove/Install

1 - RIGHT FRONT WHEEL HOUSE
2 - WASHER RESERVOIR
3 - ENGINE COMPARTMENT WASHER HOSE
4 - SCREW (2)
5 - RESERVOIR REAR WASHER HOSE

INSTALLATION

(1) Position the washer reservoir into the right front fender wheel house.

(2) Insert the washer reservoir filler neck through the clearance hole in the right front fender wheel house panel extension (Fig. 25).

WASHER RESERVOIR (Continued)

(3) Raise the washer reservoir far enough to engage the hook tab at the back of the reservoir into the slot in the right front frame rail.

(4) Install and tighten the two screws that secure the reservoir to the right front frame rail. Tighten the screws to 7 N·m (65 in. lbs.).

(5) Engage the rear washer hose into the integral washer reservoir trough. Be certain that the rear washer hose is routed rearward of the washer pump/motor unit, and the front washer hose is routed forward of the washer pump/motor unit. The rear washer hose can be identified by an in line hose connector that joins the reservoir hose to the engine compartment hose located near the top of main body of the reservoir.

(6) Reconnect the front and rear washer hoses to the washer pump/motor outlet nipples. Be certain that the rear washer hose in the trough rearward of the washer pump/motor unit is connected to the rear (black) nipple, and the hose forward of the washer pump/motor is connected to the front (blue) nipple.

(7) Reconnect the headlamp and dash wire harness connector for the washer fluid level switch to the switch connector receptacle (Fig. 24).

(8) Reconnect the headlamp and dash wire harness connector for the washer pump/motor to the connector receptacle on the top of the motor housing.

(9) Reposition the forward end of the front wheelhouse splash shield to the inner fender panel and the front fascia.

(10) Reinstall the plastic push-in fasteners that secure the front wheelhouse splash shield to the inner fender panel and the front fascia. (Refer to 23 - BODY/EXTERIOR/FRONT WHEELHOUSE SPLASH SHIELD - INSTALLATION).

(11) Lower the vehicle.

(12) Install a new blind rivet to secure the washer reservoir filler neck support bracket to the upper radiator crossmember (Fig. 23).

(13) Reinstall the air cleaner housing onto the top of the right front fender wheel house. (Refer to 9 - ENGINE/AIR INTAKE SYSTEM/AIR CLEANER ELEMENT - INSTALLATION).

(14) Reconnect the battery negative cable.

(15) Refill the washer reservoir with the washer fluid siphoned from the reservoir during the removal procedure.

WIPER ARM

DESCRIPTION

FRONT

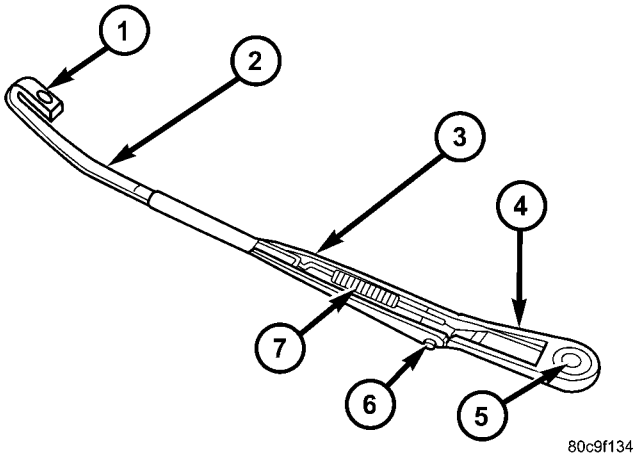

Fig. 26 Front Wiper Arm

1 - HOOK
2 - STRAP
3 - CHANNEL
4 - PIVOT END
5 - PIVOT HOLE
6 - HINGE PIN
7 - TENSION SPRING

The front wiper arms are the rigid members located between the wiper pivots that protrude from the cowl plenum cover/grille panel near the base of the windshield and the wiper blades on the windshield glass (Fig. 26). These wiper arms feature an over-center hinge that allows easy access to the windshield glass for cleaning. The wiper arm has a die cast metal pivot end with a large tapered mounting hole at one end. A molded black plastic cap fits over the wiper arm retaining nut to conceal the nut and this mounting hole following wiper arm installation.

The wide end of a tapered, stamped steel channel hinges on and is secured with a hinge pin to the blade end of the wiper arm pivot end. One end of a long, rigid, stamped steel strap, with a small hole near its pivot end, is riveted and crimped within the narrow end of the stamped steel channel. The tip of the wiper blade end of this strap is bent back under itself to form a small hook. Concealed within the stamped steel channel, one end of a long spring is engaged with a wire hook on the underside of the die cast pivot end, while the other end of the spring is hooked through the small hole in the steel strap. The entire wiper arm has a satin black finish applied to all of its visible surfaces.

WIPER ARM (Continued)

A wiper arm cannot be adjusted or repaired. If damaged or faulty, the entire wiper arm unit must be replaced.

REAR

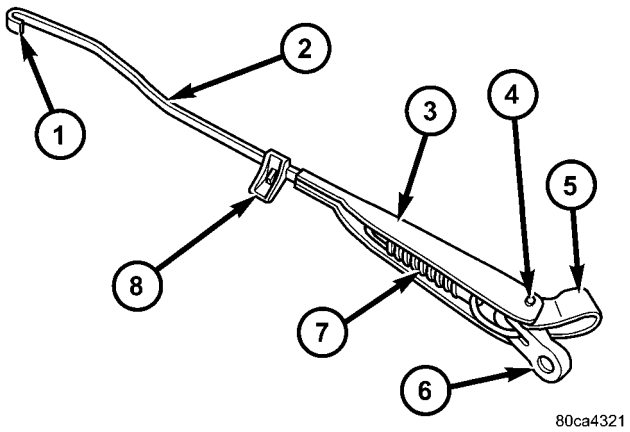

Fig. 27 Rear Wiper Arm

1 - HOOK
2 - STRAP
3 - CHANNEL
4 - HINGE PIN
5 - COVER
6 - PIVOT END
7 - TENSION SPRING
8 - SUPPORT

The rear wiper arm is the rigid member located between the rear wiper motor output shaft that protrudes from the outer tailgate panel near the base of the rear flip-up glass opening and the rear wiper blade (Fig. 27). This wiper arm features an over-center hinge that allows easy access to the tailgate and rear flip-up glass for cleaning, after the spare tire is removed. The wiper arm has a die cast metal pivot end with a large tapered mounting hole at one end. A molded plastic pivot cover is secured loosely to and pivots on the wiper arm hinge pin to conceal the wiper arm retaining nut.

The wide end of a tapered, stamped steel channel is secured with a hinge pin to the pivot end of the wiper arm. One end of a long, rigid, stamped steel strap, with a small hole near its pivot end, is riveted and crimped within the narrow end of the stamped steel channel. The tip of the wiper blade end of this strap is bent back under itself to form a small hook. Concealed within the stamped steel channel, one end of a long spring is engaged with a wire hook on the underside of the die cast pivot end, while the other end of the spring is hooked through the small hole in the steel strap. A molded plastic wiper arm support is snapped onto the wiper arm strap where it exits the channel. The entire wiper arm has a satin black finish applied to all of its visible surfaces.

A wiper arm cannot be adjusted or repaired. If damaged or faulty, the entire wiper arm unit must be replaced.

OPERATION

FRONT

The front wiper arms are designed to mechanically transmit the motion from the wiper pivots to the wiper blades. The wiper arm must be properly indexed to the wiper pivot in order to maintain the proper wiper blade travel on the glass. The tapered mounting hole in the wiper arm pivot end interlocks with the serrations on the tapered outer circumference of the wiper pivot shaft, allowing positive engagement and finite adjustment of this connection. The mounting nut locks the wiper arm to the threaded stud of the wiper pivot shaft. The spring-loaded wiper arm hinge controls the down-force applied through the tip of the wiper arm to the wiper blade on the glass. The hook formation on the tip of the wiper arm provides a cradle for securing and latching the wiper blade pivot block to the wiper arm.

REAR

The rear wiper arm is designed to mechanically transmit the motion from the rear wiper motor output shaft to the rear wiper blade. The wiper arm must be properly indexed to the motor output shaft in order to maintain the proper wiper blade travel on the glass. The wiper arm support is designed to lift and support the rear wiper arm and blade off of the glass when the rear wiper blade is parked. This support and the park ramp on the tailgate outer panel below the glass also provide an alignment reference to ensure accurate rear wiper arm and blade installation.

The tapered hole in the wiper arm pivot end interlocks with the serrations on the outer circumference of the tapered motor output shaft, allowing positive engagement and finite adjustment of this connection. A hex nut secures the wiper arm pivot end to the threads on the rear wiper motor output shaft and the pivot cover hinges and snaps over this connection for a neat appearance. The spring-loaded wiper arm hinge controls the down-force applied through the tip of the wiper arm to the wiper blade on the glass. The hook formation on the tip of the wiper arm provides a cradle for securing and latching the wiper blade pivot block to the wiper arm.

WIPER ARM (Continued)

REMOVAL

FRONT

(1) Lift the front wiper arm to its over-center position to hold the wiper blade off of the glass and relieve the spring tension on the wiper arm to wiper pivot shaft connection.

(2) Carefully pry the plastic nut cap off of the pivot end of the wiper arm (Fig. 28).

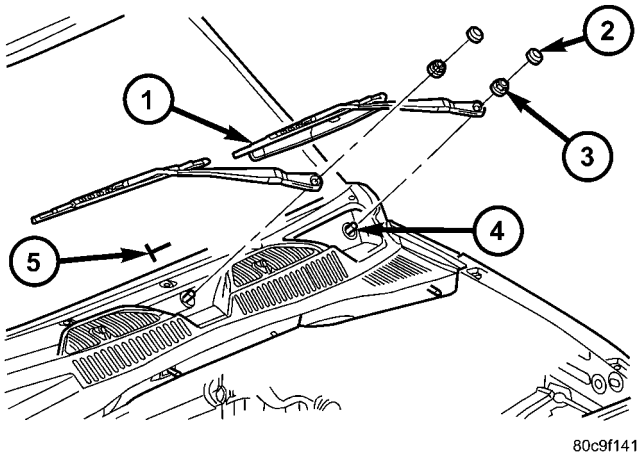

Fig. 28 Front Wiper Arm Remove/Install

1 - FRONT WIPER BLADE & ARM (2)
2 - CAP (2)
3 - NUT (2)
4 - PIVOT SHAFT (2)
5 - T-SHAPED ALIGNMENT MARK (2)

(3) Remove the nut that secures the wiper arm to the wiper pivot shaft.

(4) If necessary, use a suitable battery terminal puller to disengage the wiper arm from the wiper pivot shaft (Fig. 29).

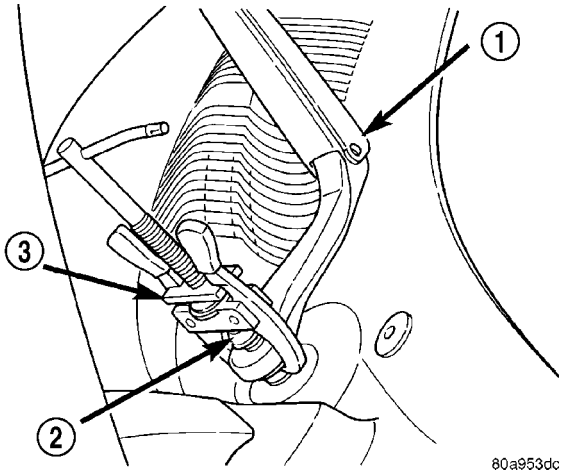

Fig. 29 Wiper Arm Puller - Typical

1 - WIPER ARM
2 - WIPER PIVOT SHAFT
3 - BATTERY TERMINAL PULLER

(5) Remove the front wiper arm pivot end from the wiper pivot shaft.

REAR

(1) Lift the rear wiper arm pivot cover by lifting it at the rear wiper motor output shaft end of the arm (Fig. 30).

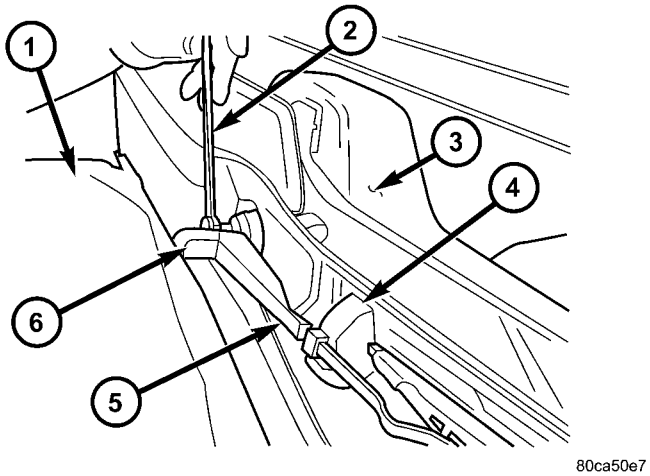

Fig. 30 Rear Wiper Arm Remove/Install

1 - SPARE TIRE
2 - WRENCH
3 - FLIP-UP GLASS
4 - PARK RAMP
5 - REAR WIPER ARM
6 - PIVOT COVER

(2) Remove the nut that secures the rear wiper arm to the rear wiper motor output shaft.

(3) If necessary, use a battery terminal puller to disengage the wiper arm from the rear wiper motor output shaft splines (Fig. 31).

NOTE: Depending upon the size and type of puller used, it may be necessary to remove the spare tire from the tailgate. Refer to the owner's manual in the vehicle glove box for information on removing the spare tire from the tailgate.

(4) Remove the rear wiper arm pivot end from the motor output shaft.

WIPER ARM (Continued)

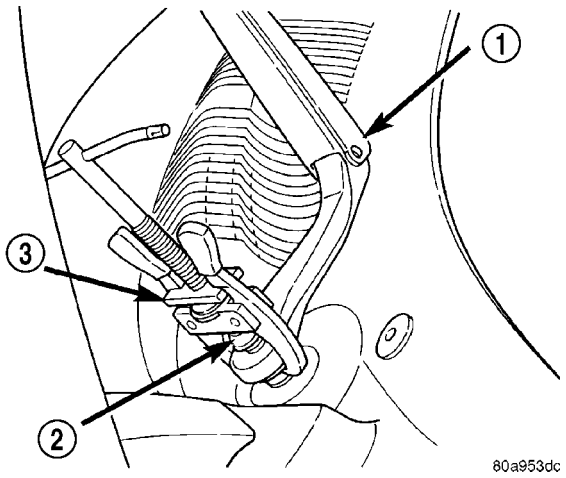

Fig. 31 Wiper Arm Puller - Typical

1 - WIPER ARM
2 - WIPER PIVOT
3 - BATTERY TERMINAL PULLER

INSTALLATION

FRONT

NOTE: Be certain that the wiper motor is in the park position before attempting to install the front wiper arms. Turn the ignition switch to the On position and move the control knob on the right (wiper) control stalk of the multi-function switch to its Off position. If the wiper pivots move, wait until they stop moving, then turn the ignition switch back to the Off position. The wiper motor is now in its park position.

(1) The front wiper arms must be indexed to the wiper pivot shafts with the wiper motor in the park position to be properly installed. Position the front wiper arm pivot ends onto the wiper pivot shafts so that the tip of the wiper blade is aligned with the T-shaped wiper alignment lines located in the lower edge of the windshield glass (Fig. 28).

(2) Once the wiper blade is aligned, lift the wiper arm away from the windshield slightly to relieve the spring tension on the pivot end and push the pivot hole on the end of the wiper arm down firmly and evenly over the wiper pivot shaft.

(3) Install and tighten the nut that secures the wiper arm to the wiper pivot shaft. Tighten the nut to 24 N·m (18 ft. lbs.).

(4) Wet the windshield glass, then operate the front wipers. Turn the front wipers Off, then check for the correct wiper arm position and readjust as required.

(5) Reinstall the plastic nut cap onto the wiper arm pivot nut.

REAR

NOTE: Always install the wiper arm and blade with the wiper motor in the Park position.

(1) The rear wiper arm must be indexed to the motor output shaft with the rear wiper motor in the park position to be properly installed. Place the wiper arm onto the tailgate with the wiper arm support positioned on the park ramp and the tapered mounting hole on the pivot end of the arm positioned over the rear wiper motor output shaft.

(2) Position the tab on the back of the rear wiper arm support on the tailgate park ramp in the Installation Position (Fig. 32).

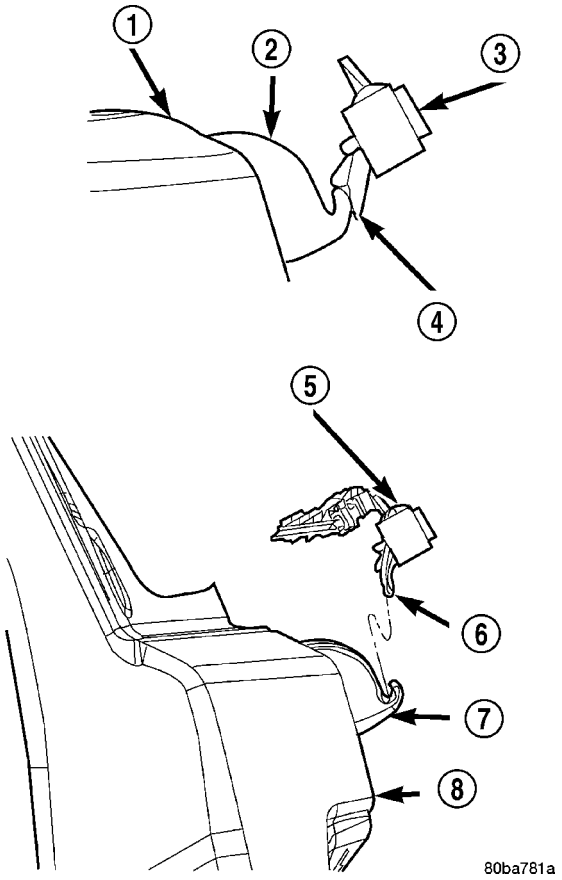

Fig. 32 Rear Wiper Arm Installation

1 - TAILGATE
2 - PARK RAMP
3 - REAR WIPER ARM
4 - INSTALLATION POSITION
5 - REAR WIPER ARM AND BLADE
6 - PARK POSITION
7 - PARK RAMP
8 - TAILGATE

(3) With the wiper arm in the Installation Position, push the tapered mounting hole on the pivot end of the wiper arm down over the rear wiper motor output shaft.

WIPER ARM (Continued)

(4) Install and tighten the nut that secures the rear wiper arm to the rear wiper motor output shaft. Tighten the nut to 18 N·m (13 ft. lbs.).

(5) Close the rear wiper arm pivot cover.

(6) Lift the rear wiper arm support away from the park ramp, then place the wiper arm support in the park ramp in the Park Position (Fig. 32).

WIPER ARM PARK RAMP

REMOVAL

(1) Disengage the rear wiper arm support from the wiper arm park ramp on the right side of the tailgate just below the rear flip-up glass.

(2) Lift the wiper arm and blade away from the tailgate until the wiper arm hinge is in its over-center position.

(3) Remove the screw that secures the wiper arm park ramp to the tailgate outer panel (Fig. 33).

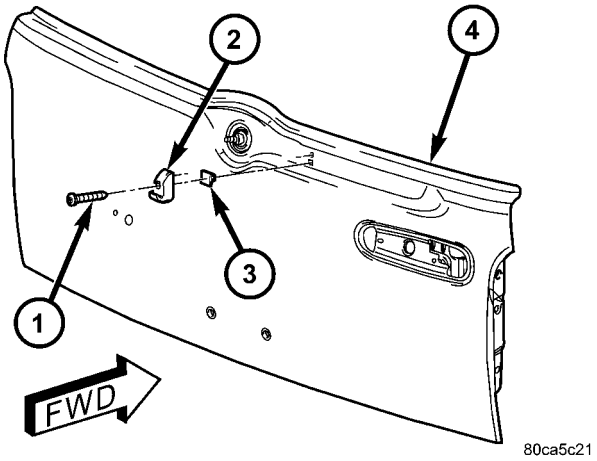

Fig. 33 Wiper Arm Park Ramp Remove/Install

1 - SCREW (1)
2 - PARK RAMP
3 - RIVET NUT (1)
4 - TAILGATE OUTER PANEL

(4) Remove the wiper arm park ramp from the tailgate outer panel.

INSTALLATION

(1) Position the wiper arm park ramp onto the tailgate outer panel (Fig. 33).

(2) Install and tighten the screw that secures the wiper arm park ramp to the tailgate outer panel. Tighten the screw to 5 N·m (45 in. lbs.).

(3) Lower the rear wiper arm and blade and place the wiper arm support onto the wiper arm park ramp.

WIPER BLADE

DESCRIPTION

FRONT

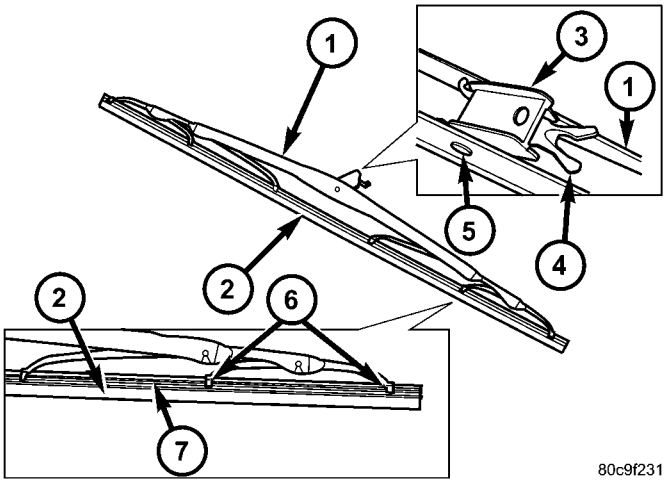

Fig. 34 Front Wiper Blade

1 - SUPERSTRUCTURE
2 - ELEMENT
3 - PIVOT BLOCK
4 - RELEASE TAB
5 - PIVOT PIN
6 - CLAWS
7 - FLEXOR

Each front wiper blade is secured by an integral latching pivot block to the hook formation on the tip of the front wiper arms, and rests on the glass near the base of the windshield when the wipers are not in operation (Fig. 34). The wiper blade consists of the following components:

- **Superstructure** - The superstructure includes several stamped steel bridges and links with claw formations that grip the wiper blade element. Also included in this unit is the latching, molded plastic pivot block that secures the superstructure to the wiper arm. On vehicles manufactured for certain markets where it is required, the driver side front wiper blade has an additional molded black plastic airfoil secured to the superstructure, which is oriented toward the base of the windshield when the front wipers are in their parked position. All of the metal components of the wiper blade have a satin black finish applied.
- **Element** - The wiper element or squeegee is the resilient rubber member of the wiper blade that contacts the glass.
- **Flexor** - The flexor is a rigid metal component running along the length of each side of the wiper element where it is gripped by the claws of the superstructure.

WIPER BLADE (Continued)

All models have two 47.50 centimeter (18.70 inch) long front wiper blades with non-replaceable rubber elements (squeegees). The wiper blades cannot be adjusted or repaired. If faulty, worn, or damaged the entire wiper blade unit must be replaced.

REAR

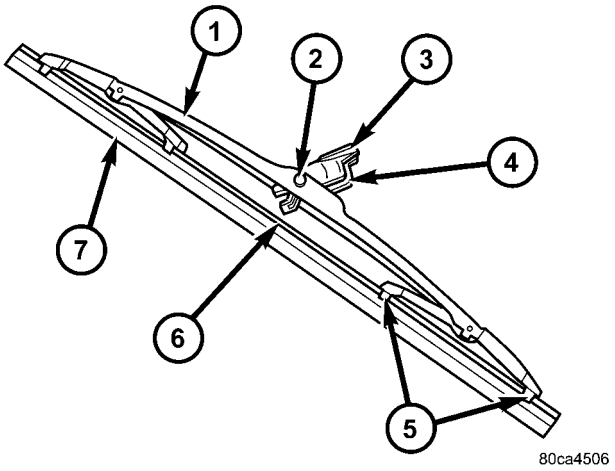

Fig. 35 Rear Wiper Blade

1 - SUPERSTRUCTURE
2 - PIVOT PIN
3 - LATCH RELEASE
4 - PIVOT BLOCK
5 - CLAW
6 - FLEXOR
7 - ELEMENT

The rear wiper blade is secured by an integral latching pivot block to the hook formation on the tip of the rear wiper arm, and rests off the glass on a park ramp on the tailgate near the base of the rear flip-up glass opening when the wiper is not in operation (Fig. 35). The rear wiper blade consists of the following components:

- **Superstructure** - The superstructure includes a stamped steel bridge and plastic links with claw formations that grip the wiper blade element. Also included in this unit is the latching, molded plastic pivot block that secures the superstructure to the wiper arm. All of the metal components of the wiper blade have a satin black finish applied.
- **Element** - The wiper element or squeegee is the resilient rubber member of the wiper blade that contacts the glass.
- **Flexor** - The flexor is a rigid metal component running along the length of each side of the wiper element where it is gripped by the claws of the superstructure.

All models have a single 28.00 centimeter (11.00 inch) rear wiper blade with a non-replaceable rubber element (squeegee). The wiper blade cannot be adjusted or repaired. If faulty, worn, or damaged the entire wiper blade unit must be replaced.

OPERATION

FRONT

The wiper blades are moved back and forth across the glass by the wiper arms when the wipers are being operated. The wiper blade superstructure is the flexible frame that grips the wiper blade element and evenly distributes the force of the spring-loaded wiper arm along the length of the element. The combination of the wiper arm force and the flexibility of the superstructure makes the element conform to and maintain proper contact with the glass, even as the blade is moved over the varied curvature that may be encountered across the glass surface.

The wiper element flexor provides the claws of the blade superstructure with a rigid, yet flexible component on the element which can be gripped. The rubber element is designed to be stiff enough to maintain an even cleaning edge as it is drawn across the glass, yet resilient enough to conform to the glass surface and flip from one cleaning edge to the other each time the wiper blade changes directions. The airfoil used on the driver side wiper blade of vehicles manufactured for certain markets is designed to reduce the lifting effect caused by air moving over the vehicle at higher highway speeds.

REAR

The rear wiper blade is moved back and forth across the glass by the wiper arm when the rear wiper system is in operation. The wiper blade superstructure is the flexible frame that grips the wiper blade element and evenly distributes the force of the spring-loaded wiper arm along the length of the element. The combination of the wiper arm force and the flexibility of the superstructure makes the element conform to and maintain proper contact with the glass, even as the blade is moved over the varied curvature found across the glass surface.

The wiper element flexor provides the claws of the blade superstructure with a rigid, yet flexible component on the element which can be gripped. The rubber element is designed to be stiff enough to maintain an even cleaning edge as it is drawn across the glass, but resilient enough to conform to the glass surface and flip from one cleaning edge to the other each time the wiper blade changes directions.

WIPER BLADE (Continued)

REMOVAL

FRONT

NOTE: The notched end of the wiper element flexor should always be oriented towards the end of the wiper blade that is nearest to the wiper pivot.

(1) Lift the front wiper arm to raise the wiper blade and element off of the glass, until the wiper arm hinge is in its over-center position.

(2) To remove the wiper blade from the wiper arm, depress the pivot block latch release tab under the tip of the arm and slide the blade away from the tip towards the pivot end of the arm far enough to disengage the pivot block from the hook formation on the end of the arm (Fig. 36).

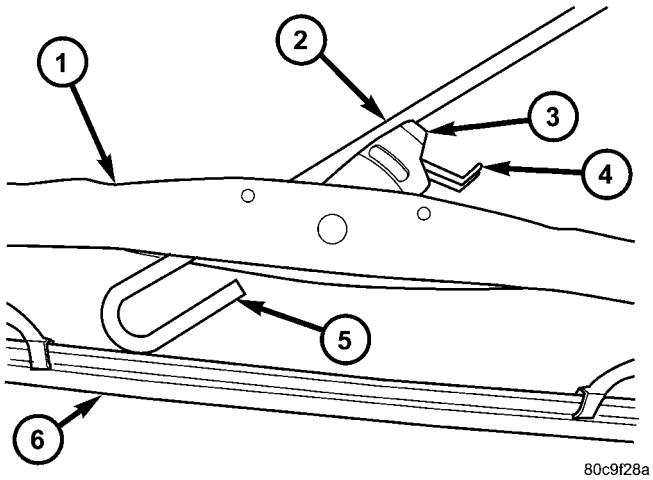

Fig. 36 Front Wiper Blade Remove/Install

1 - SUPERSTRUCTURE
2 - WIPER ARM
3 - PIVOT BLOCK
4 - RELEASE TAB
5 - HOOK
6 - ELEMENT

(3) Extract the hook formation on the tip of the wiper arm through the opening in the wiper blade superstructure just ahead of the wiper blade pivot block/latch unit.

CAUTION: Do not allow the wiper arm to spring back against the glass without the wiper blade in place or the glass may be damaged.

(4) Gently lower the tip of the wiper arm onto the glass.

REAR

NOTE: The notched end of the wiper element flexor should always be oriented towards the end of the wiper blade that is nearest to the rear wiper motor output shaft.

(1) Disengage the rear wiper arm support from the rear wiper arm park ramp on the right side of the tailgate just below the rear flip-up glass.

(2) Lift the rear wiper arm to raise the wiper blade and element off of the tailgate and the rear flip-up glass.

(3) To remove the wiper blade from the wiper arm, carefully lift up the pivot block latch release tab on the top of the wiper arm to unlatch it from the arm (Fig. 37).

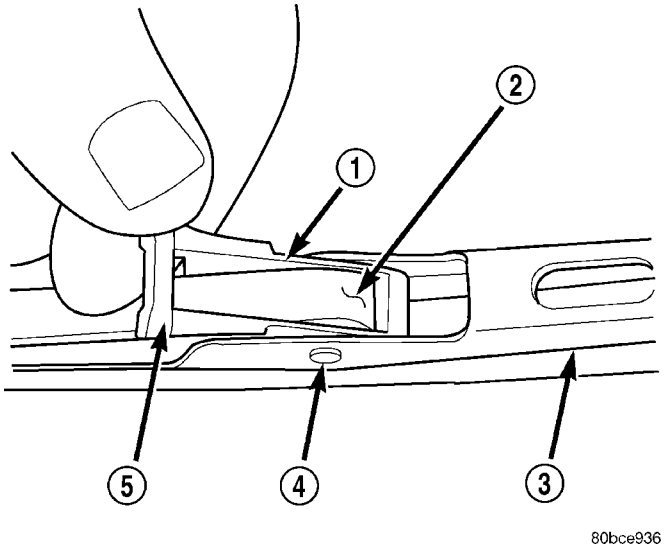

Fig. 37 Rear Wiper Blade Release

1 - PIVOT BLOCK WINDOW
2 - TIP OF REAR WIPER ARM
3 - SUPERSTRUCTURE
4 - PIVOT BLOCK HINGE PIN
5 - LATCH RELEASE TAB

(4) Raise the pivot block latch release tab until it is perpendicular to the rear wiper blade superstructure (Fig. 38).

(5) Slide the rear wiper blade away from the tip of the arm towards the pivot end of the arm far enough to disengage the pivot block from the hook formation on the end of the arm.

(6) Extract the hook formation on the tip of the wiper arm from the window in the wiper blade pivot block/latch unit.

CAUTION: Do not allow the wiper arm to spring back against the tailgate or the flip-up glass without the wiper blade in place or they may be damaged.

(7) Gently lower the wiper arm and place the arm support in the park ramp.

WIPER BLADE (Continued)

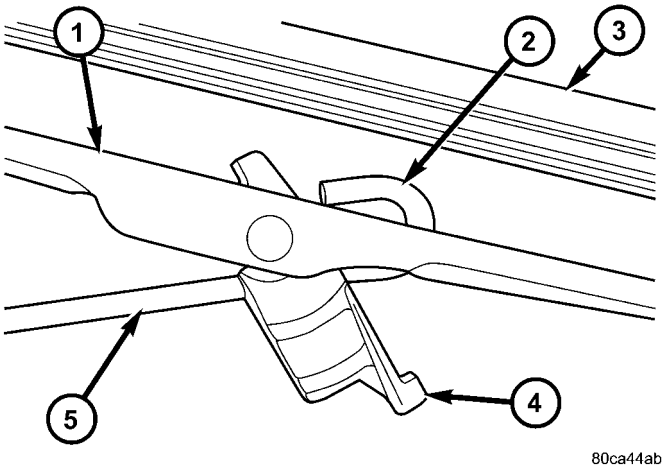

Fig. 38 Rear Wiper Blade Remove/Install

1 - SUPERSTRUCTURE
2 - HOOK
3 - ELEMENT
4 - LATCH RELEASE
5 - REAR WIPER ARM

INSTALLATION

FRONT

NOTE: The notched end of the wiper element flexor should always be oriented towards the end of the wiper blade that is nearest to the wiper pivot.

(1) Lift the front wiper arm off of the windshield glass, until the wiper arm hinge is in its over-center position.

(2) Position the front wiper blade near the hook formation on the tip of the arm with the notched end of the wiper element flexor oriented towards the end of the wiper arm that is nearest to the wiper pivot.

(3) Insert the hook formation on the tip of the wiper arm through the opening in the wiper blade superstructure ahead of the wiper blade pivot block/latch unit far enough to engage the pivot block into the hook (Fig. 36).

(4) Slide the wiper blade pivot block/latch up into the hook formation on the tip of the wiper arm until the latch release tab snaps into its locked position. Latch engagement will be accompanied by an audible click.

(5) Gently lower the wiper blade onto the glass.

REAR

NOTE: The notched end of the wiper element flexor should always be oriented towards the end of the wiper blade that is nearest to the rear wiper motor output shaft.

(1) Lift the rear wiper arm support out of the tail gate park ramp.

(2) Position the rear wiper blade near the hook formation on the tip of the arm with the notched end of the wiper element flexor oriented towards the end of the wiper arm that is nearest to the rear wiper motor output shaft.

(3) Raise the pivot block latch release tab until it is perpendicular to the rear wiper blade superstructure.

(4) Insert the hook formation on the tip of the wiper arm through the window in the wiper blade pivot block/latch unit.

(5) Slide the wiper blade pivot block/latch up into the hook formation on the tip of the wiper arm until the hook is firmly seated against the pivot block.

(6) Press the pivot block latch release tab downward until it snaps into its locked position over the top of the wiper arm.

(7) Gently lower the wiper arm and place the arm support in the tailgate park ramp.

WIPER HIGH/LOW RELAY

DESCRIPTION

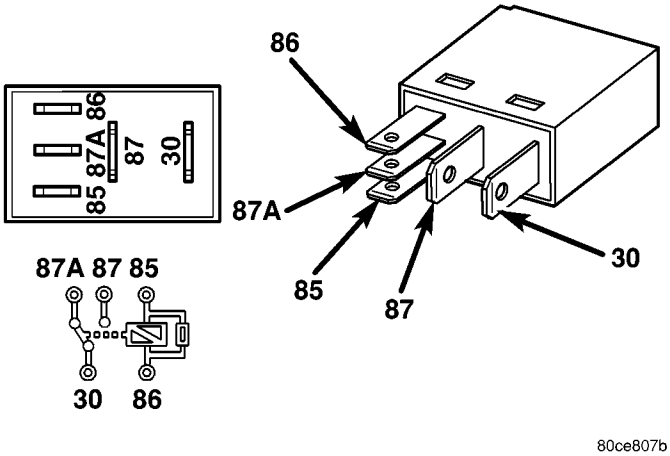

Fig. 39 ISO Micro Relay

30 - COMMON FEED
85 - COIL GROUND
86 - COIL BATTERY
87 - NORMALLY OPEN
87A - NORMALLY CLOSED

The wiper high/low relay is located in the Power Distribution Center (PDC) in the engine compartment near the battery. The wiper high/low relay is a conventional International Standards Organization (ISO) micro relay (Fig. 39). Relays conforming to the ISO specifications have common physical dimensions, current capacities, terminal patterns, and terminal functions. The relay is contained within a small, rect-

WIPER HIGH/LOW RELAY (Continued)

angular, molded plastic housing and is connected to all of the required inputs and outputs by five integral male spade-type terminals that extend from the bottom of the relay base.

The wiper high/low relay cannot be adjusted or repaired and, if faulty or damaged, the unit must be replaced.

OPERATION

The wiper high/low relay is an electromechanical switch that uses a low current input from the Body Control Module (BCM) to control a high current output to the front wiper motor. The movable common feed contact point is held against the fixed normally closed contact point by spring pressure. When the relay coil is energized, an electromagnetic field is produced by the coil windings. This electromagnetic field draws the movable relay contact point away from the fixed normally closed contact point, and holds it against the fixed normally open contact point. When the relay coil is de-energized, spring pressure returns the movable contact point back against the fixed normally closed contact point. A resistor is connected in parallel with the relay coil in the relay, and helps to dissipate voltage spikes and electromagnetic interference that can be generated as the electromagnetic field of the relay coil collapses.

The wiper high/low relay terminals are connected to the vehicle electrical system through a connector receptacle in the Power Distribution Center (PDC). The inputs and outputs of the wiper high/low relay include:

- **Common Feed Terminal** - The common feed terminal (30) is connected to the common feed terminal (30) of the wiper on/off relay at all times through the wiper on/off relay output circuit. Therefore, the wiper high/low relay common feed terminal is only powered when the wiper on/off relay is energized.
- **Coil Ground Terminal** - The coil ground terminal (85) is connected to a control output of the Body Control Module (BCM) through the front wiper high/low relay control circuit. The BCM controls front wiper motor operation by controlling a ground path through this circuit.
- **Coil Battery Terminal** - The coil battery terminal (86) receives battery current at all times from a circuit breaker in the Junction Block (JB) through a fused ignition switch output (run-acc) circuit.
- **Normally Open Terminal** - The normally open terminal (87) is connected to the high speed brush of the front wiper motor through the front wiper high/low relay high speed output circuit. Therefore, when the wiper high/low relay is energized, the wiper motor high speed brush is powered.
- **Normally Closed Terminal** - The normally closed terminal (87A) is connected to the low speed brush of the front wiper motor through the front wiper high/low relay low speed output circuit. Therefore, the wiper motor low speed brush can only be powered when the wiper high/low relay is de-energized.

The wiper high/low relay can be diagnosed using conventional diagnostic tools and methods.

WIPER MODULE

DESCRIPTION

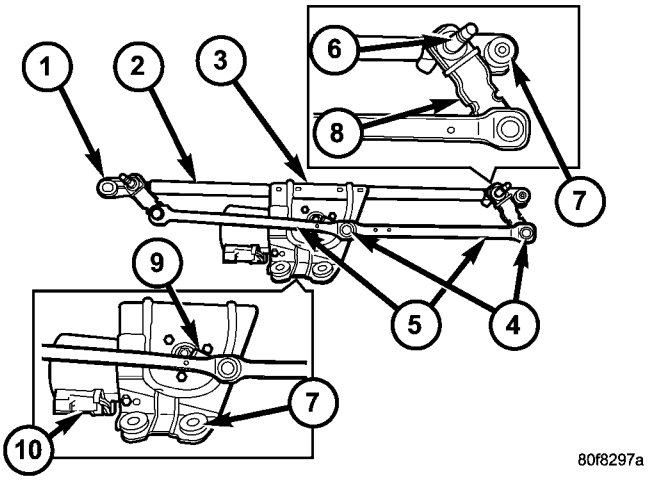

Fig. 40 Front Wiper Module

1 - PIVOT BRACKET (2)
2 - TUBULAR MEMBER
3 - MOUNTING PLATE
4 - LINKAGE BUSHING (4)
5 - DRIVE LINK (2)
6 - PIVOT SHAFT (2)
7 - INSULATOR (4)
8 - PIVOT CRANK ARM (2)
9 - MOTOR CRANK ARM
10 - PIGTAIL WIRE CONNECTOR

The front wiper module bracket is secured with two nuts below the wiper motor through rubber insulators to two weld studs on the bottom of the cowl plenum panel beneath the cowl plenum cover/grille panel (Fig. 40). Two screws secure the top of the module bracket to the cowl plenum panel through rubber insulators located on the outboard end of each pivot bracket. The ends of the wiper pivot shafts that protrude through dedicated openings in the cowl plenum cover/grille panel to drive the wiper arms and blades are the only visible components of the front wiper module. The front wiper module consists of the following major components:

- **Bracket** - The front wiper module bracket consists of a long tubular steel main member that has a die cast pivot bracket formation near each end where the two wiper pivots are secured. A stamped steel mounting plate for the wiper motor is secured with

WIPER MODULE (Continued)

welds near the center of the main member. A short stamped steel tab that extends laterally from one side of the mounting plate provides a mounting location for the wiper motor pigtail wire connector.

- **Crank Arm** - The front wiper motor crank arm is a stamped steel unit with a slotted hole on the driven end that is secured to the wiper motor output shaft with a nut, and has a ball stud secured to the drive end.
- **Linkage** - Two stamped steel drive links connect the wiper motor crank arm to the wiper pivot lever arms. The right side drive link has a plastic socket-type bushing on each end. The left side drive link has a plastic socket-type bushing on one end, and a plastic sleeve-type bushing on the other end. The socket-type bushing on one end of each drive link is snap-fit over the ball stud on the lever arm of its respective pivot. The left side drive link sleeve-type bushing end is then fit over the motor crank arm ball stud, and the other socket-type bushing of the right side drive link is snap-fit over the exposed end of the wiper motor crank arm ball stud.
- **Motor** - The front wiper motor is secured with three screws to the motor mounting plate near the center of the wiper module bracket. The wiper motor output shaft passes through a hole in the module bracket, where a nut secures the wiper motor crank arm to the motor output shaft. The two-speed permanent magnet wiper motor features an integral transmission, an internal park switch, and an internal automatic resetting circuit breaker.
- **Pivots** - The two front wiper pivots are secured within the die cast pivot brackets on the outboard ends of the wiper module main member. The lever arms that extend from the center of the pivot shafts each have a ball stud on their end. The upper end of each pivot shaft where the wiper arms will be fastened each is tapered and serrated with a threaded stud formation at the tip. The lower ends of the pivot shafts are installed through lubricated bushings in the pivot brackets and are secured with snap rings.

The front wiper module cannot be adjusted or repaired. If any component of the module is faulty or damaged, the entire front wiper module unit must be replaced.

OPERATION

The front wiper module operation is controlled by the battery current inputs received by the wiper motor from the wiper on/off and wiper high/low relays. The wiper motor speed is controlled by current flow to either the low speed or the high speed set of brushes. The park switch is a single pole, single throw, momentary switch within the wiper motor that is mechanically actuated by the wiper motor transmission components. The park switch alternately closes the wiper park switch sense circuit to ground or to battery current, depending upon the position of the wipers on the glass. This feature allows the motor to complete its current wipe cycle after the wiper system has been turned Off, and to park the wiper blades in the lowest portion of the wipe pattern. The automatic resetting circuit breaker protects the motor from overloads. The wiper motor crank arm, the two wiper linkage members, and the two wiper pivots mechanically convert the rotary output of the wiper motor to the back and forth wiping motion of the wiper arms and blades on the glass.

REMOVAL

(1) Unlatch and open the hood.

(2) Disconnect and isolate the battery negative cable.

(3) Remove both front wiper arms from the wiper pivots. (Refer to 8 - ELECTRICAL/WIPERS/WASHERS - FRONT/FRONT WIPER ARM - REMOVAL).

(4) Remove the cowl plenum cover/grille panel from over the cowl plenum. (Refer to 23 - BODY/EXTERIOR/COWL GRILLE - REMOVAL).

(5) Disconnect the headlamp and dash wire harness connector for the front wiper motor from the motor pigtail wire connector (Fig. 41).

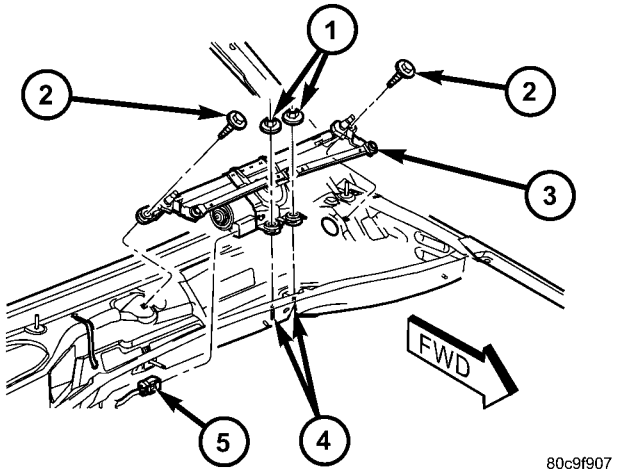

Fig. 41 Front Wiper Module Remove/Install

1 - NUT (2)
2 - SCREW (2)
3 - FRONT WIPER MODULE
4 - STUD (2)
5 - WIRE HARNESS CONNECTOR

(6) Remove the two screws that secure the front wiper module to the top of the cowl plenum panel at the pivot brackets.

(7) Remove the two nuts that secure the front wiper module to the two weld studs on the bottom of the cowl plenum panel.

(8) Lift the front wiper module up from the cowl plenum panel far enough to disengage the two lower

WIPER MODULE (Continued)

insulators from the weld studs on the bottom of the plenum panel.

(9) Remove the front wiper module from the cowl plenum panel as a unit.

INSTALLATION

(1) Position the front wiper module to the cowl plenum as a unit (Fig. 41).

(2) Lower the front wiper module lower mounting insulators over the two weld studs on the bottom of the cowl plenum panel.

(3) Install the two screws that secure the front wiper module to the top of the cowl plenum panel at the pivot brackets. Tighten the screw on the driver side, followed by the screw on the passenger side. Tighten the screws to 8 N·m (72 in. lbs.).

(4) Install and tighten the two nuts that secure the front wiper module to the two weld studs on the bottom of the cowl plenum panel. Tighten the nuts to 8 N·m (72 in. lbs.).

(5) Reconnect the headlamp and dash wire harness connector for the front wiper motor to the motor pigtail wire connector.

(6) Reinstall the cowl plenum cover/grille panel over the cowl plenum. (Refer to 23 - BODY/EXTERIOR/COWL GRILLE - INSTALLATION).

(7) Close and latch the hood.

(8) Reinstall both front wiper arms onto the wiper pivots. (Refer to 8 - ELECTRICAL/FRONT WIPERS/WASHERS/FRONT WIPER ARM - INSTALLATION).

(9) Reconnect the battery negative cable.

WIPER ON/OFF RELAY

DESCRIPTION

The wiper on/off relay is located in the Power Distribution Center (PDC) in the engine compartment near the battery. The wiper on/off relay is a conventional International Standards Organization (ISO) micro relay (Fig. 42). Relays conforming to the ISO specifications have common physical dimensions, current capacities, terminal patterns, and terminal functions. The relay is contained within a small, rectangular, molded plastic housing and is connected to all of the required inputs and outputs by five integral male spade-type terminals that extend from the bottom of the relay base.

The wiper on/off relay cannot be adjusted or repaired and, if faulty or damaged, the unit must be replaced.

OPERATION

The wiper on/off relay is an electromechanical switch that uses a low current input from the Body Control Module (BCM) to control a high current output to the front wiper motor. The movable common feed contact point is held against the fixed normally closed contact point by spring pressure. When the relay coil is energized, an electromagnetic field is produced by the coil windings. This electromagnetic field draws the movable relay contact point away from the fixed normally closed contact point, and holds it against the fixed normally open contact point. When the relay coil is de-energized, spring pressure returns the movable contact point back against the fixed normally closed contact point. A resistor is connected in parallel with the relay coil in the relay, and helps to dissipate voltage spikes and electromagnetic interference that can be generated as the electromagnetic field of the relay coil collapses.

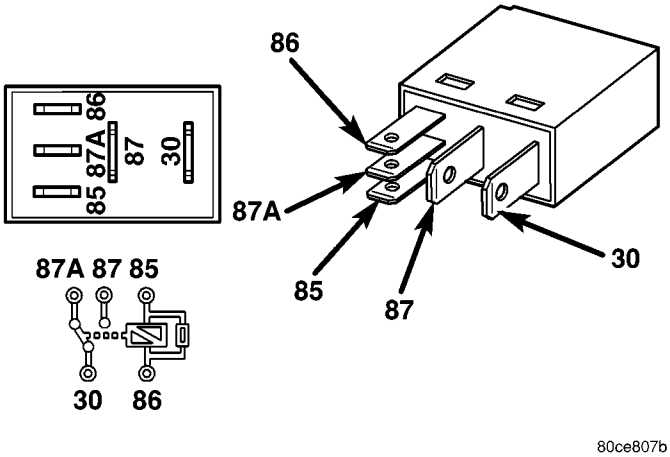

Fig. 42 ISO Micro Relay

30 - COMMON FEED
85 - COIL GROUND
86 - COIL BATTERY
87 - NORMALLY OPEN
87A - NORMALLY CLOSED

The wiper on/off relay terminals are connected to the vehicle electrical system through a connector receptacle in the Power Distribution Center (PDC). The inputs and outputs of the wiper on/off relay include:

- **Common Feed Terminal** - The common feed terminal (30) is connected to the common feed terminal of the wiper high/low relay at all times through the wiper on/off relay output circuit. Therefore, the wiper high/low relay is able to control the wiper motor speed only when the wiper on/off relay is energized.
- **Coil Ground Terminal** - The coil ground terminal (85) is connected to a control output of the Body Control Module (BCM) through the front wiper on/off relay control circuit. The BCM controls front wiper motor operation by controlling a ground path through this circuit.

WIPER ON/OFF RELAY (Continued)

- **Coil Battery Terminal** - The coil battery terminal (86) receives battery current at all times from a circuit breaker in the Junction Block (JB) through a fused ignition switch output (run-acc) circuit.
- **Normally Open Terminal** - The normally open terminal (87) receives battery current from a circuit breaker in the Junction Block (JB) through a fused ignition switch output (run-acc) circuit. When the front wiper on/off relay is energized, the wiper high/low relay is able to control the wiper motor speed.
- **Normally Closed Terminal** - The normally closed terminal (87A) is connected to the wiper park switch in the front wiper motor through the front wiper park switch sense circuit, and is connected to the wiper park switch whenever the relay is de-energized.

The wiper on/off relay can be diagnosed using conventional diagnostic tools and methods.

NAVIGATION/TELECOMMUNICATION

TABLE OF CONTENTS

page

NAVIGATION/TELECOMMUNICATION
DESCRIPTION 1
OPERATION 1

page

HANDS FREE MODULE
REMOVAL 1
INSTALLATION 2

NAVIGATION/ TELECOMMUNICATION

DESCRIPTION

TELECOMMUNICATIONS

The hands-free cellular system on this vehicle uses Bluetooth™ technology to provide wireless communication between the operator's compatible cellular telephone and the vehicle's on-board receiver.

The system uses voice recognition technology to control operation. The incoming voice is broadcast through the vehicle's radio speakers, automatically overriding any other audio signals on the front speakers when the hands-free system is in use. A microphone in the rearview mirror picks up vehicle occupant's voices. If a call is in progress when the ignition is switched off, the call will be transferred to the hand-held telephone.

The system will communicate with a telephone that is anywhere within the vehicle. However, covering the hand held phone or the hands-free phone module with a metal object may block the signal. The system will recognize up to seven telephones, each of which is given a spoken identification by the user during the setup process. The system includes Spanish and French voice recognition in addition to English.

OPERATION

TELECOMMUNICATION

Two buttons on the rearview mirror, identified with ISO icons, control the system: A ″phone″ button turns the system on and off; a ″voice recognition″ (or voice command) button prompts the hands-free system to listen for a voice command. The system includes the following features:

- Phone book - Stores telephone numbers for later recall by name or other verbal identification, called a voice tag, and memory location.
- Four memory locations - Home, Work, Mobile, and Pager. A maximum of 32 unique names or voice tags may be stored at the same time, with a different number in each of the four memory locations.
- Voice tag dialing - Dials the number associated with a voice tag and memory location.
- Digit dialing - Dials the telephone number by recognizing the names of the digits as they are spoken.
- Receiving calls - A voice prompt notifies the user of an incoming call. Pressing the UConnect button accepts or rejects the call.
- Privacy Mode - Switches the call to the hand-held telephone and the hands-free system and back again using the “voice recognition” (or “voice command”) button and a voice command, if desired.

HANDS FREE MODULE

REMOVAL

(1) Disconnect and isolate the battery negative cable.
(2) Remove the right quarter trim panel(Refer to 23 - BODY/INTERIOR/QUARTER TRIM PANEL - REMOVAL).
(3) Remove mounting fasteners (Fig. 1).

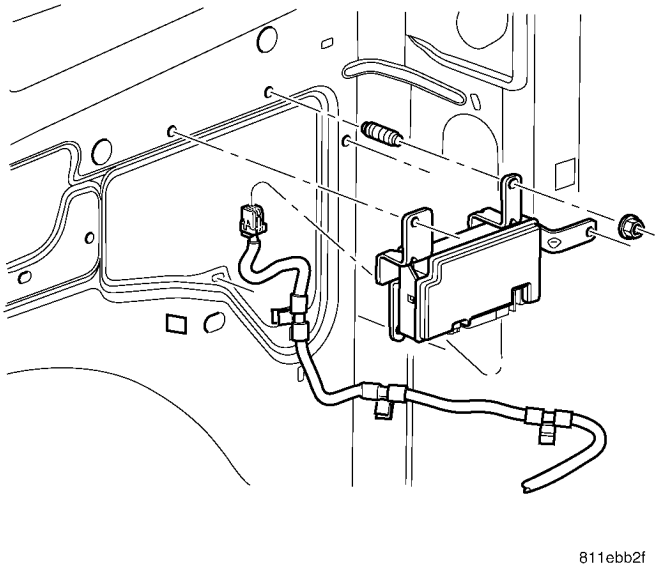

Fig. 1 HANDS FREE MODULE AND BRACKET

(4) Disconnect electrical harness connector.

HANDS FREE MODULE (Continued)

INSTALLATION

(1) Connect electrical harness connector.
(2) Position module, and install mounting fasteners.
(3) Install quarter trim panel (Refer to 23 - BODY/INTERIOR/QUARTER TRIM PANEL - INSTALLATION).
(4) Connect battery negative cable.

WIRING

TABLE OF CONTENTS

	page
WIRING DIAGRAM INFORMATION	8W-01-1
COMPONENT INDEX	8W-02-1
POWER DISTRIBUTION	8W-10-1
JUNCTION BLOCK	8W-12-1
GROUND DISTRIBUTION	8W-15-1
BUS COMMUNICATIONS	8W-18-1
CHARGING SYSTEM	8W-20-1
STARTING SYSTEM	8W-21-1
FUEL/IGNITION SYSTEM	8W-30-1
TRANSMISSION CONTROL SYSTEM	8W-31-1
VEHICLE SPEED CONTROL	8W-33-1
ANTILOCK BRAKES	8W-35-1
VEHICLE THEFT SECURITY SYSTEM	8W-39-1
INSTRUMENT CLUSTER	8W-40-1
HORN/CIGAR LIGHTER/POWER OUTLET	8W-41-1
AIR CONDITIONING-HEATER	8W-42-1
AIRBAG SYSTEM	8W-43-1
INTERIOR LIGHTING	8W-44-1
BODY CONTROL MODULE	8W-45-1
AUDIO SYSTEM	8W-47-1
REAR WINDOW DEFOGGER	8W-48-1
OVERHEAD CONSOLE	8W-49-1
FRONT LIGHTING	8W-50-1
REAR LIGHTING	8W-51-1
TURN SIGNALS	8W-52-1
WIPERS	8W-53-1
TRAILER TOW	8W-54-1
NAVIGATION/TELECOMMUNICATIONS	8W-55-1
POWER WINDOWS	8W-60-1
POWER DOOR LOCKS	8W-61-1
POWER MIRRORS	8W-62-1
POWER SEAT	8W-63-1
POWER SUNROOF	8W-64-1
SPLICE INFORMATION	8W-70-1
CONNECTOR PIN-OUTS	8W-80-1
CONNECTOR/GROUND/SPLICE LOCATION	8W-91-1
POWER DISTRIBUTION	8W-97-1

8W-01 WIRING DIAGRAM INFORMATION

TABLE OF CONTENTS

page

WIRING DIAGRAM INFORMATION
DESCRIPTION
DESCRIPTION - HOW TO USE WIRING DIAGRAMS 1
DESCRIPTION - CIRCUIT INFORMATION 5
DESCRIPTION - CIRCUIT FUNCTIONS 6
DESCRIPTION - SECTION IDENTIFICATION AND INFORMATION 6
DESCRIPTION - CONNECTOR, GROUND AND SPLICE INFORMATION 7
WARNINGS - GENERAL 7
DIAGNOSIS AND TESTING - WIRING HARNESS 7
STANDARD PROCEDURE
STANDARD PROCEDURE - ELECTROSTATIC DISCHARGE (ESD) SENSITIVE DEVICES 8
STANDARD PROCEDURE - TESTING OF VOLTAGE POTENTIAL. 9
STANDARD PROCEDURE - TESTING FOR CONTINUITY 9
STANDARD PROCEDURE - TESTING FOR A SHORT TO GROUND 9
STANDARD PROCEDURE - TESTING FOR A SHORT TO GROUND ON FUSES POWERING SEVERAL LOADS 9
STANDARD PROCEDURE - TESTING FOR A VOLTAGE DROP 10
SPECIAL TOOLS
WIRING/TERMINAL 10
CONNECTOR
REMOVAL 11
INSTALLATION 11
DIODE
REMOVAL 14
INSTALLATION 14
TERMINAL
REMOVAL 14
INSTALLATION 14
WIRE
STANDARD PROCEDURE - WIRE SPLICING . . 15

WIRING DIAGRAM INFORMATION

DESCRIPTION

DESCRIPTION - HOW TO USE WIRING DIAGRAMS

DaimlerChrysler Corporation wiring diagrams are designed to provide information regarding the vehicles wiring content. In order to effectively use the wiring diagrams to diagnose and repair DaimlerChrysler Corporation vehicles, it is important to understand all of their features and characteristics.

Diagrams are arranged such that the power (B+) side of the circuit is placed near the top of the page, and the ground (B-) side of the circuit is placed near the bottom of the page (Fig. 1).

All switches, components, and modules are shown in the at rest position with the doors closed and the key removed from the ignition (Fig. 2).

Components are shown two ways. A solid line around a component indicates that the component is complete. A dashed line around the component indicates that the component is being shown is not complete. Incomplete components have a reference number to indicate the page where the component is shown complete.

It is important to realize that no attempt is made on the diagrams to represent components and wiring as they appear on the vehicle. For example, a short piece of wire is treated the same as a long one. In addition, switches and other components are shown as simply as possible, with regard to function only.

SYMBOLS

International symbols are used throughout the wiring diagrams. These symbols are consistent with those being used around the world (Fig. 3).

TERMINOLOGY

This is a list of terms and definitions used in the wiring diagrams.

WIRING DIAGRAM INFORMATION (Continued)

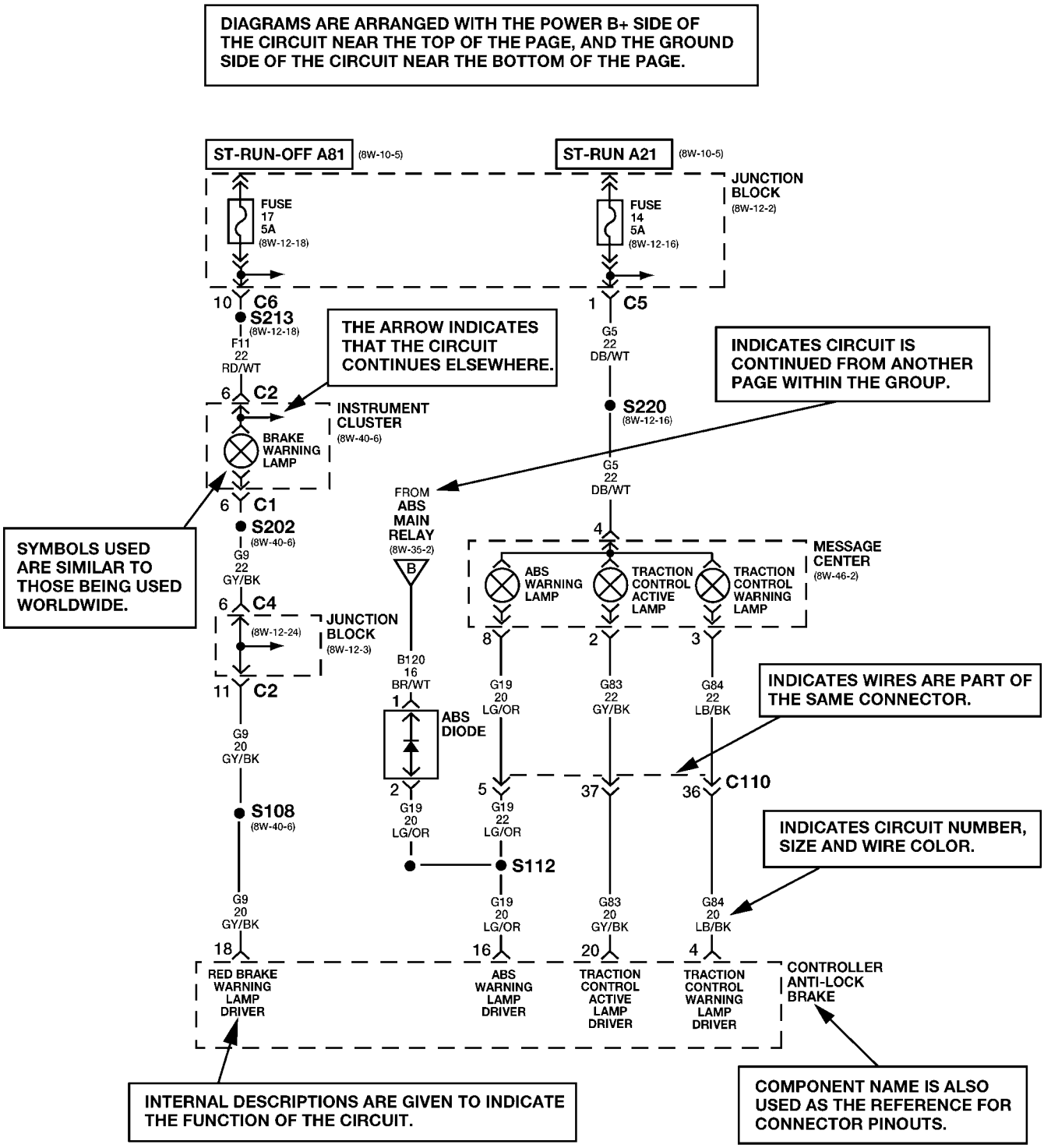

The System shown here is an EXAMPLE ONLY. It does not represent the actual circuit shown in the WIRING DIAGRAM SECTION.

80c06a01

Fig. 1 WIRING DIAGRAM EXAMPLE 1

WIRING DIAGRAM INFORMATION (Continued)

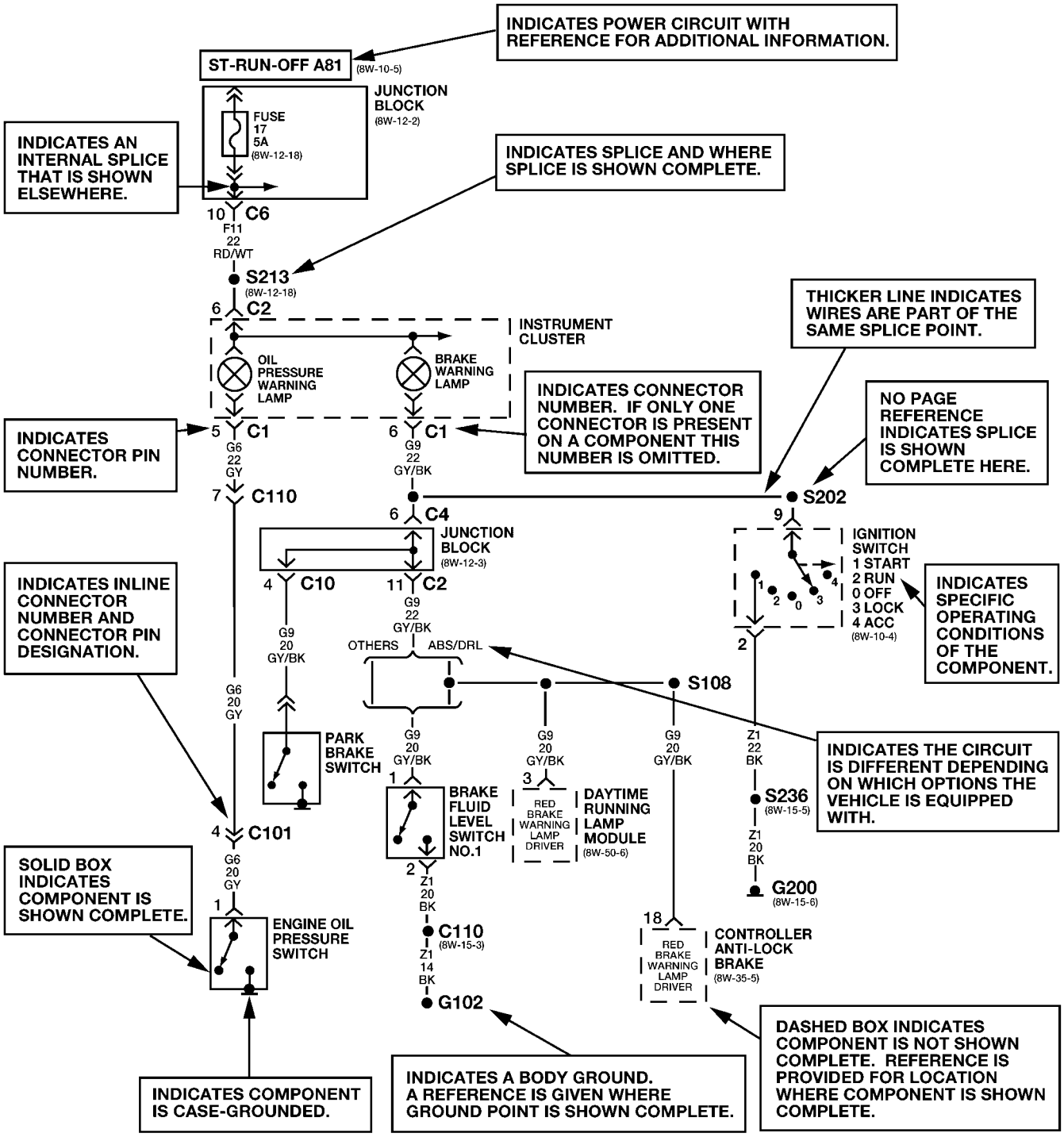

The System shown here is an EXAMPLE ONLY. It does not represent the actual circuit shown in the WIRING DIAGRAM SECTION.

80c06d02

Fig. 2 WIRING DIAGRAM EXAMPLE 2

WIRING DIAGRAM INFORMATION (Continued)

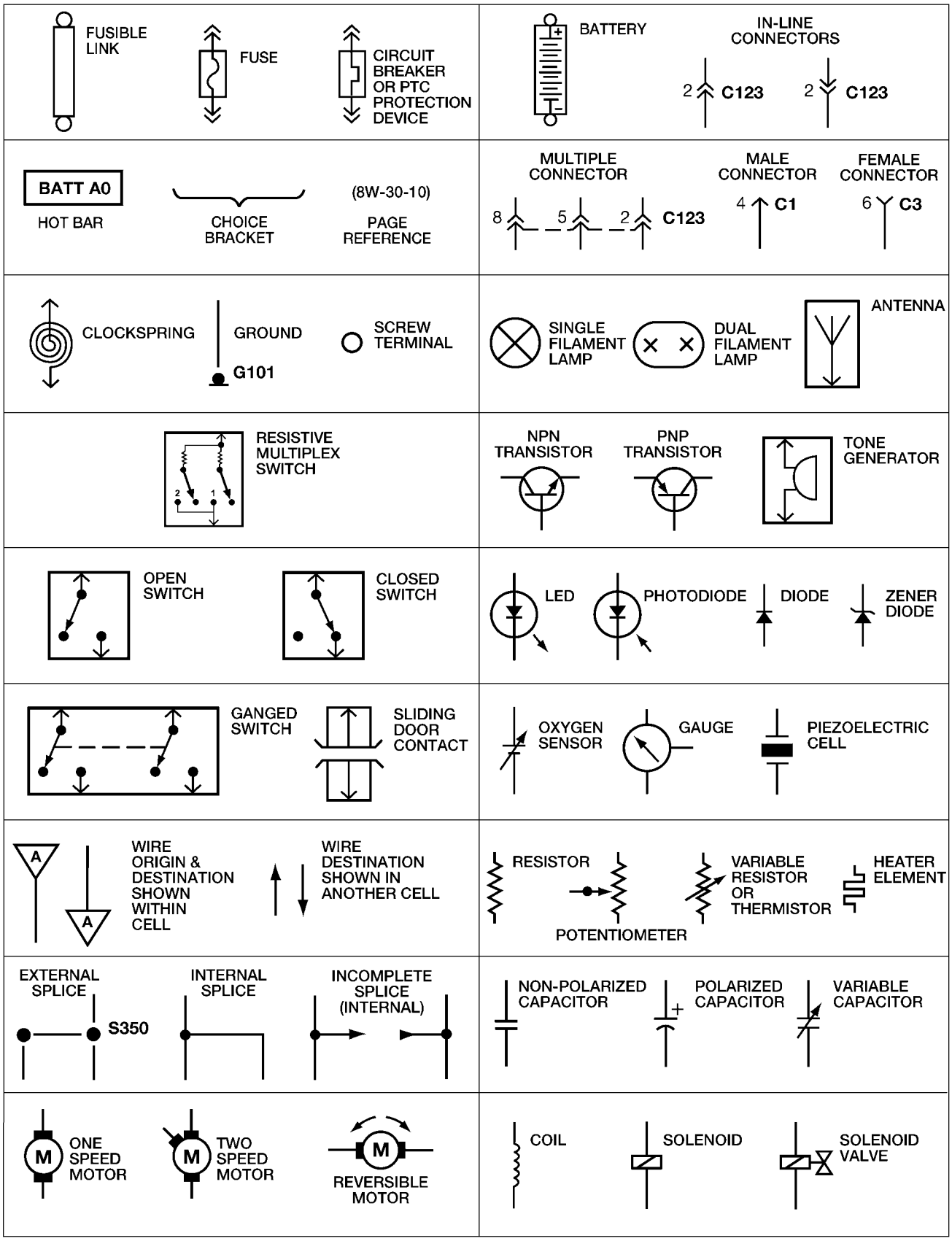

Fig. 3 WIRING DIAGRAM SYMBOLS

WIRING DIAGRAM INFORMATION (Continued)

LHD . . . . . Left Hand Drive Vehicles
RHD . . . . . Right Hand Drive Vehicles
ATX . . Automatic Transmissions-Front Wheel Drive
MTX . . . Manual Transmissions-Front Wheel Drive
AT . . . . Automatic Transmissions-Rear Wheel Drive
MT . . . . . Manual Transmissions-Rear Wheel Drive
SOHC . . . . . Single Over Head Cam Engine
DOHC . . . . . Double Over Head Cam Engine
Export . . Vehicles Built For Sale In Markets Other Than North America
Except Export . . . . Vehicles Built For Sale In North America

DESCRIPTION - CIRCUIT INFORMATION

Each wire shown in the diagrams contains a code which identifies the main circuit, part of the main circuit, gage of wire, and color (Fig. 4).

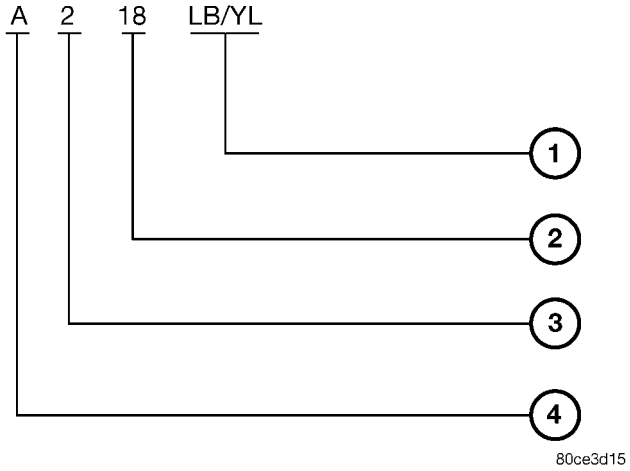

Fig. 4 WIRE CODE IDENTIFICATION

1 - COLOR OF WIRE (LIGHT BLUE WITH YELLOW TRACER
2 - GAGE OF WIRE (18 GAGE)
3 - PART OF MAIN CIRCUIT (VARIES DEPENDING ON EQUIPMENT)
4 - MAIN CIRCUIT IDENTIFICATION

WIRE COLOR CODE CHART

COLOR CODE	COLOR
BL	BLUE
BK	BLACK
BR	BROWN
DB	DARK BLUE
DG	DARK GREEN
GY	GRAY
LB	LIGHT BLUE
LG	LIGHT GREEN
OR	ORANGE
PK	PINK
RD	RED
TN	TAN
VT	VIOLET
WT	WHITE
YL	YELLOW
*	WITH TRACER

WIRING DIAGRAM INFORMATION (Continued)

DESCRIPTION - CIRCUIT FUNCTIONS

All circuits in the diagrams use an alpha/numeric code to identify the wire and it's function. To identify which circuit code applies to a system, refer to the Circuit Identification Code Chart. This chart shows the main circuits only and does not show the secondary codes that may apply to some models.

CIRCUIT IDENTIFICATION CODE CHART

CIRCUIT	FUNCTION
A	BATTERY FEED
B	BRAKE CONTROLS
C	CLIMATE CONTROLS
D	DIAGNOSTIC CIRCUITS
E	DIMMING ILLUMINATION CIRCUITS
F	FUSED CIRCUITS
G	MONITORING CIRCUITS (GAUGES)
H	MULTIPLE
I	NOT USED
J	OPEN
K	POWERTRAIN CONTROL MODULE
L	EXTERIOR LIGHTING
M	INTERIOR LIGHTING
N	MULTIPLE
O	NOT USED
P	POWER OPTION (BATTERY FEED)
Q	POWER OPTIONS (IGNITION FEED)
R	PASSIVE RESTRAINT
S	SUSPENSION/STEERING
T	TRANSMISSION/TRANSAXLE/ TRANSFER CASE
U	OPEN
V	SPEED CONTROL, WIPER/ WASHER
W	WIPERS
X	AUDIO SYSTEMS
Y	TEMPORARY
Z	GROUNDS

DESCRIPTION - SECTION IDENTIFICATION AND INFORMATION

The wiring diagrams are grouped into individual sections. If a component is most likely found in a particular group, it will be shown complete (all wires, connectors, and pins) within that group. For example, the Auto Shutdown Relay is most likely to be found in Group 30, so it is shown there complete. It can, however, be shown partially in another group if it contains some associated wiring.

Splice diagrams in Section 8W-70 show the entire splice and provide references to other sections the splices serves. Section 8W-70 only contains splice diagrams that are not shown in their entirety somewhere else in the wiring diagrams.

Section 8W-80 shows each connector and the circuits involved with that connector. The connectors are identified using the name/number on the diagram pages.

WIRING SECTION CHART

GROUP	TOPIC
8W-01 thru 8W-09	General information and Diagram Overview
8W-10 thru 8W-19	Main Sources of Power and Vehicle Grounding
8W-20 thru 8W-29	Starting and Charging
8W-30 thru 8W-39	Powertrain/Drivetrain Systems
8W-40 thru 8W-49	Body Electrical items and A/C
8W-50 thru 8W-59	Exterior Lighting, Wipers and Trailer Tow
8W-60 thru 8W-69	Power Accessories
8W-70	Splice Information
8W-80	Connector Pin Outs
8W-91	Connector, Ground and Splice Locations

WIRING DIAGRAM INFORMATION (Continued)

DESCRIPTION - CONNECTOR, GROUND AND SPLICE INFORMATION

CAUTION: Not all connectors are serviced. Some connectors are serviced only with a harness. A typical example might be the Supplemental Restraint System connectors. Always check parts availability before attempting a repair.

IDENTIFICATION

In-line connectors are identified by a number, as follows:

- In-line connectors located in the engine compartment are C100 series numbers
- In-line connectors located in the Instrument Panel area are C200 series numbers.
- In-line connectors located in the body are C300 series numbers.
- Jumper harness connectors are C400 series numbers.
- Grounds and ground connectors are identified with a “G” and follow the same series numbering as the in-line connectors.
- Splices are identified with an “S” and follow the same series numbering as the in-line connectors.
- Component connectors are identified by the component name instead of a number. Multiple connectors on a component use a C1, C2, etc. identifier.

LOCATIONS

Section 8W-91 contains connector/ground/splice location illustrations. The illustrations contain the connector name (or number)/ground number/splice number and component identification. Connector/ground/splice location charts in section 8W-91 reference the figure numbers of the illustrations.

The abbreviation T/O is used in the component location section to indicate a point in which the wiring harness branches out to a component. The abbreviation N/S means Not Shown in the illustrations

WARNINGS - GENERAL

WARNINGS provide information to prevent personal injury and vehicle damage. Below is a list of general warnings that should be followed any time a vehicle is being serviced.

WARNING: ALWAYS WEAR SAFETY GLASSES FOR EYE PROTECTION.

WARNING: USE SAFETY STANDS ANYTIME A PROCEDURE REQUIRES BEING UNDER A VEHICLE.

WARNING: BE SURE THAT THE IGNITION SWITCH ALWAYS IS IN THE OFF POSITION, UNLESS THE PROCEDURE REQUIRES IT TO BE ON.

WARNING: SET THE PARKING BRAKE WHEN WORKING ON ANY VEHICLE. AN AUTOMATIC TRANSMISSION SHOULD BE IN PARK. A MANUAL TRANSMISSION SHOULD BE IN NEUTRAL.

WARNING: OPERATE THE ENGINE ONLY IN A WELL-VENTILATED AREA.

WARNING: KEEP AWAY FROM MOVING PARTS WHEN THE ENGINE IS RUNNING, ESPECIALLY THE FAN AND BELTS.

WARNING: TO PREVENT SERIOUS BURNS, AVOID CONTACT WITH HOT PARTS SUCH AS THE RADIATOR, EXHAUST MANIFOLD(S), TAIL PIPE, CATALYTIC CONVERTER AND MUFFLER.

WARNING: DO NOT ALLOW FLAME OR SPARKS NEAR THE BATTERY. GASES ARE ALWAYS PRESENT IN AND AROUND THE BATTERY.

WARNING: ALWAYS REMOVE RINGS, WATCHES, LOOSE HANGING JEWELRY AND AVOID LOOSE CLOTHING.

DIAGNOSIS AND TESTING - WIRING HARNESS

TROUBLESHOOTING TOOLS

When diagnosing a problem in an electrical circuit there are several common tools necessary. These tools are listed and explained below.

- Jumper Wire - This is a test wire used to connect two points of a circuit. It can be used to bypass an open in a circuit.

WARNING: NEVER USE A JUMPER WIRE ACROSS A LOAD, SUCH AS A MOTOR, CONNECTED BETWEEN A BATTERY FEED AND GROUND.

- Voltmeter - Used to check for voltage on a circuit. Always connect the black lead to a known good ground and the red lead to the positive side of the circuit.

CAUTION: Most of the electrical components used in today’s vehicles are Solid State. When checking voltages in these circuits, use a meter with a 10 - megohm or greater impedance rating.

WIRING DIAGRAM INFORMATION (Continued)

• Ohmmeter - Used to check the resistance between two points of a circuit. Low or no resistance in a circuit means good continuity.

CAUTION: Most of the electrical components used in today's vehicles are Solid State. When checking resistance in these circuits use a meter with a 10 - megohm or greater impedance rating. In addition, make sure the power is disconnected from the circuit. Circuits that are powered up by the vehicle's electrical system can cause damage to the equipment and provide false readings.

• Probing Tools - These tools are used for probing terminals in connectors (Fig. 5). Select the proper size tool from Special Tool Package 6807, and insert it into the terminal being tested. Use the other end of the tool to insert the meter probe.

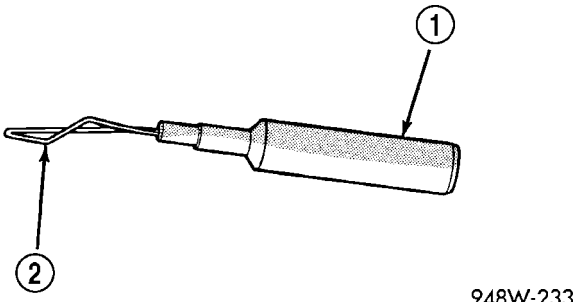

Fig. 5 PROBING TOOL

1 - SPECIAL TOOL 6801
2 - PROBING END

INTERMITTENT AND POOR CONNECTIONS

Most intermittent electrical problems are caused by faulty electrical connections or wiring. It is also possible for a sticking component or relay to cause a problem. Before condemning a component or wiring assembly, check the following items.

• Connectors are fully seated
• Spread terminals, or terminal push out
• Terminals in the wiring assembly are fully seated into the connector/component and locked into position
• Dirt or corrosion on the terminals. Any amount of corrosion or dirt could cause an intermittent problem
• Damaged connector/component casing exposing the item to dirt or moisture
• Wire insulation that has rubbed through causing a short to ground
• Some or all of the wiring strands broken inside of the insulation
• Wiring broken inside of the insulation

TROUBLESHOOTING WIRING PROBLEMS

When troubleshooting wiring problems there are six steps which can aid in the procedure. The steps are listed and explained below. Always check for non-factory items added to the vehicle before doing any diagnosis. If the vehicle is equipped with these items, disconnect them to verify these add-on items are not the cause of the problem.

(1) Verify the problem.
(2) Verify any related symptoms. Do this by performing operational checks on components that are in the same circuit. Refer to the wiring diagrams.
(3) Analyze the symptoms. Use the wiring diagrams to determine what the circuit is doing, where the problem most likely is occurring and where the diagnosis will continue.
(4) Isolate the problem area.
(5) Repair the problem area.
(6) Verify the proper operation. For this step, check for proper operation of all items on the repaired circuit. Refer to the wiring diagrams.

STANDARD PROCEDURE

STANDARD PROCEDURE - ELECTROSTATIC DISCHARGE (ESD) SENSITIVE DEVICES

All ESD sensitive components are solid state and a symbol (Fig. 6) is used to indicate this. When handling any component with this symbol, comply with the following procedures to reduce the possibility of electrostatic charge build up on the body and inadvertent discharge into the component. If it is not known whether the part is ESD sensitive, assume that it is.

(1) Always touch a known good ground before handling the part. This should be repeated while handling the part and more frequently after sliding across a seat, sitting down from a standing position, or walking a distance.
(2) Avoid touching electrical terminals of the part, unless instructed to do so by a written procedure.
(3) When using a voltmeter, be sure to connect the ground lead first.
(4) Do not remove the part form it's protective packing until it is time to install the part.
(5) Before removing the part from it's pakage, ground the pakage to a known good ground on the vehicle.

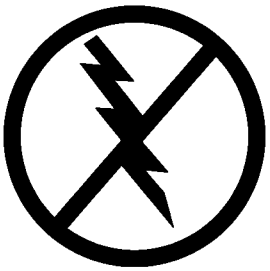

Fig. 6 ELECTROSTATIC DISCHARGE SYMBOL

WIRING DIAGRAM INFORMATION (Continued)

STANDARD PROCEDURE - TESTING OF VOLTAGE POTENTIAL

(1) Connect the ground lead of a voltmeter to a known good ground (Fig. 7).

(2) Connect the other lead of the voltmeter to the selected test point. The vehicle ignition may need to be turned ON to check voltage. Refer to the appropriate test procedure.

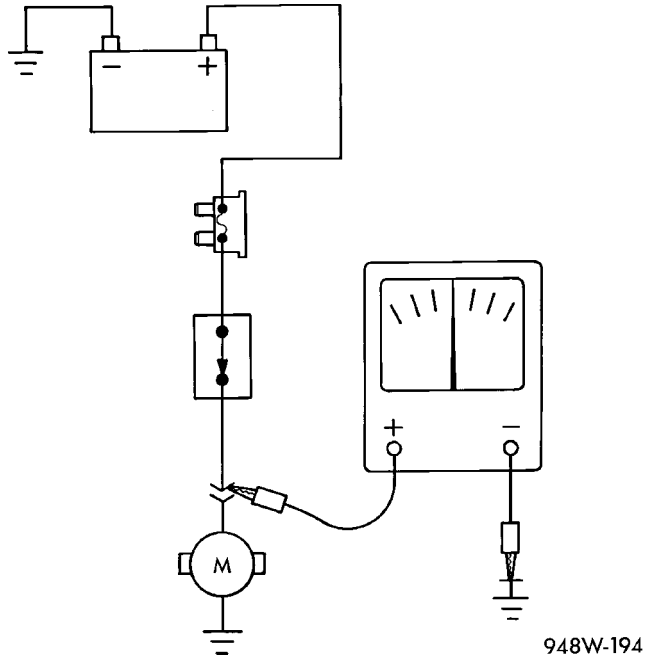

Fig. 7 TESTING FOR VOLTAGE POTENTIAL

STANDARD PROCEDURE - TESTING FOR CONTINUITY

(1) Remove the fuse for the circuit being checked or, disconnect the battery.

(2) Connect one lead of the ohmmeter to one side of the circuit being tested (Fig. 8).

(3) Connect the other lead to the other end of the circuit being tested. Low or no resistance means good continuity.

STANDARD PROCEDURE - TESTING FOR A SHORT TO GROUND

(1) Remove the fuse and disconnect all items involved with the fuse.

(2) Connect a test light or a voltmeter across the terminals of the fuse.

(3) Starting at the fuse block, wiggle the wiring harness about six to eight inches apart and watch the voltmeter/test lamp.

(4) If the voltmeter registers voltage or the test lamp glows, there is a short to ground in that general area of the wiring harness.

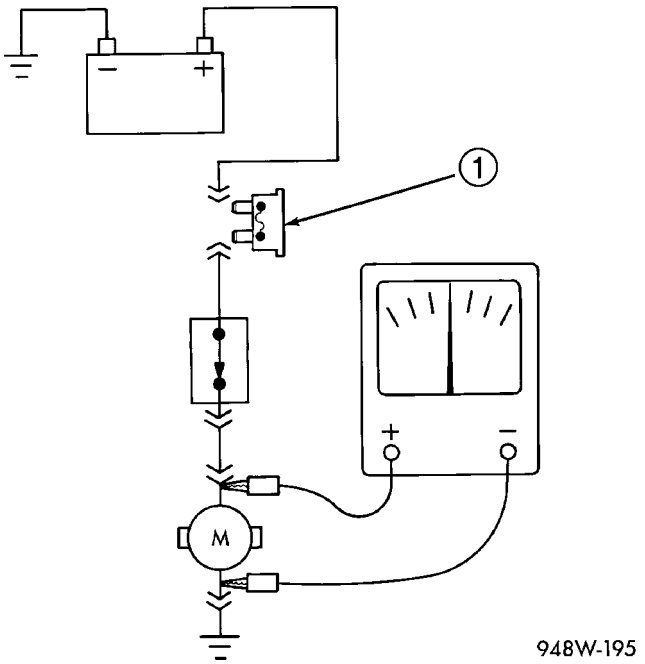

Fig. 8 TESTING FOR CONTINUITY

1 - FUSE REMOVED FROM CIRCUIT

STANDARD PROCEDURE - TESTING FOR A SHORT TO GROUND ON FUSES POWERING SEVERAL LOADS

(1) Refer to the wiring diagrams and disconnect or isolate all items on the suspected fused circuits.

(2) Replace the blown fuse.

(3) Supply power to the fuse by turning ON the ignition switch or re-connecting the battery.

(4) Start connecting or energizing the items in the fuse circuit one at a time. When the fuse blows the circuit with the short to ground has been isolated.

WIRING DIAGRAM INFORMATION (Continued)

STANDARD PROCEDURE - TESTING FOR A VOLTAGE DROP

(1) Connect the positive lead of the voltmeter to the side of the circuit closest to the battery (Fig. 9).

(2) Connect the other lead of the voltmeter to the other side of the switch, component or circuit.

(3) Operate the item.

(4) The voltmeter will show the difference in voltage between the two points.

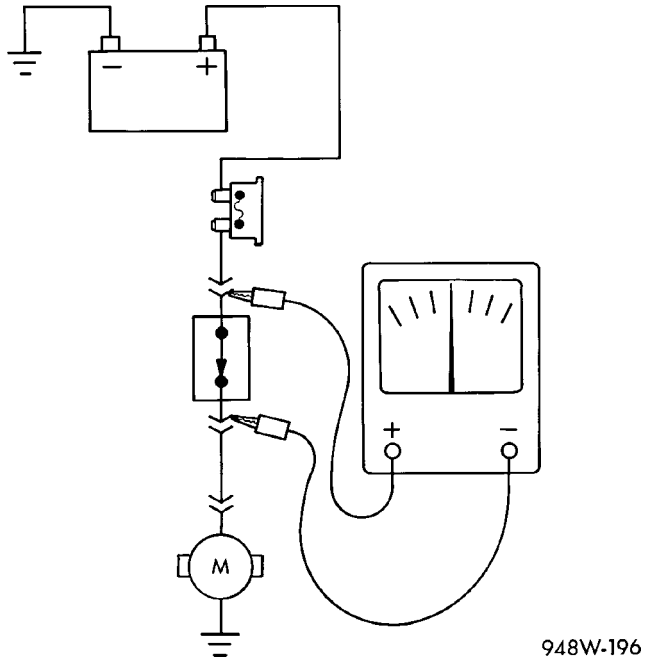

Fig. 9 TESTING FOR VOLTAGE DROP

SPECIAL TOOLS

WIRING/TERMINAL

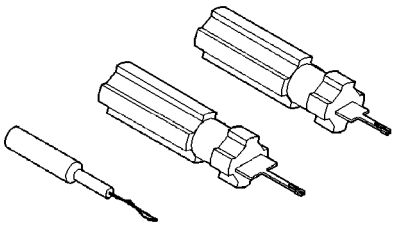

PROBING TOOL PACKAGE 6807

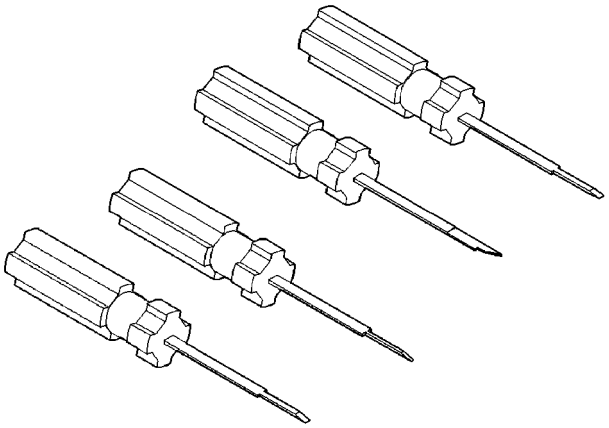

TERMINAL PICK TOOL SET 6680

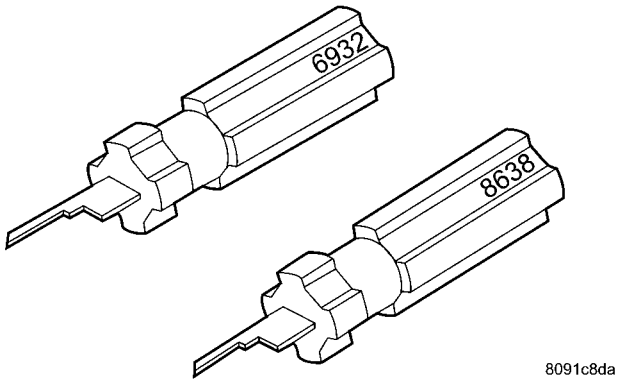

TERMINAL REMOVING TOOLS 6932 AND 8638

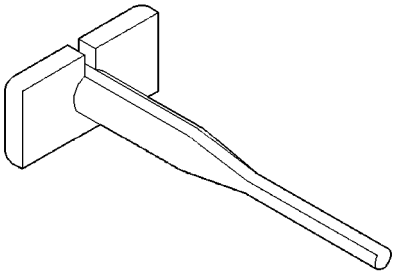

TERMINAL REMOVING TOOL 6934

CONNECTOR

REMOVAL

(1) Disconnect battery.

(2) Release Connector Lock (Fig. 10).

(3) Disconnect the connector being repaired from its mating half/component.

(4) Remove the dress cover (if applicable) (Fig. 10).

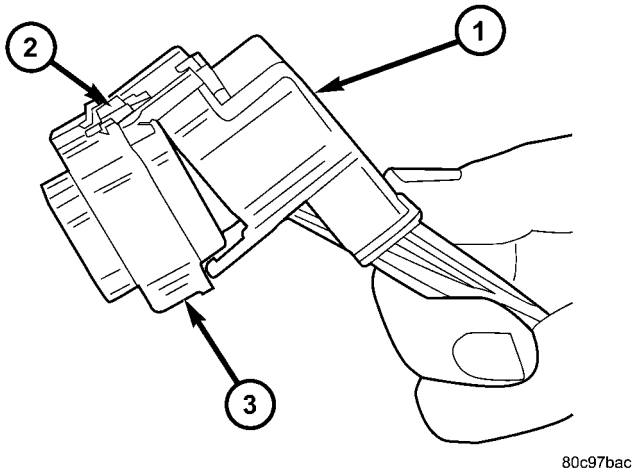

Fig. 10 REMOVAL OF DRESS COVER

1 - DRESS COVER
2 - CONNECTOR LOCK
3 - CONNECTOR

(5) Release the Secondary Terminal Lock, if required (Fig. 11).

(6) Position the connector locking finger away from the terminal using the proper special tool. Pull on the wire to remove the terminal from the connector (Fig. 12).

INSTALLATION

(1) Insert the removed terminal in the same cavity on the repair connector.

(2) Repeat steps for each terminal in the connector, being sure that all wires are inserted into the proper cavities. For additional connector pin-out identification, refer to the wiring diagrams.

(3) When the connector is re-assembled, the secondary terminal lock must be placed in the locked position to prevent terminal push out.

(4) Replace dress cover (if applicable).

(5) Connect connector to its mating half/component.

(6) Connect battery and test all affected systems.

CONNECTOR (Continued)

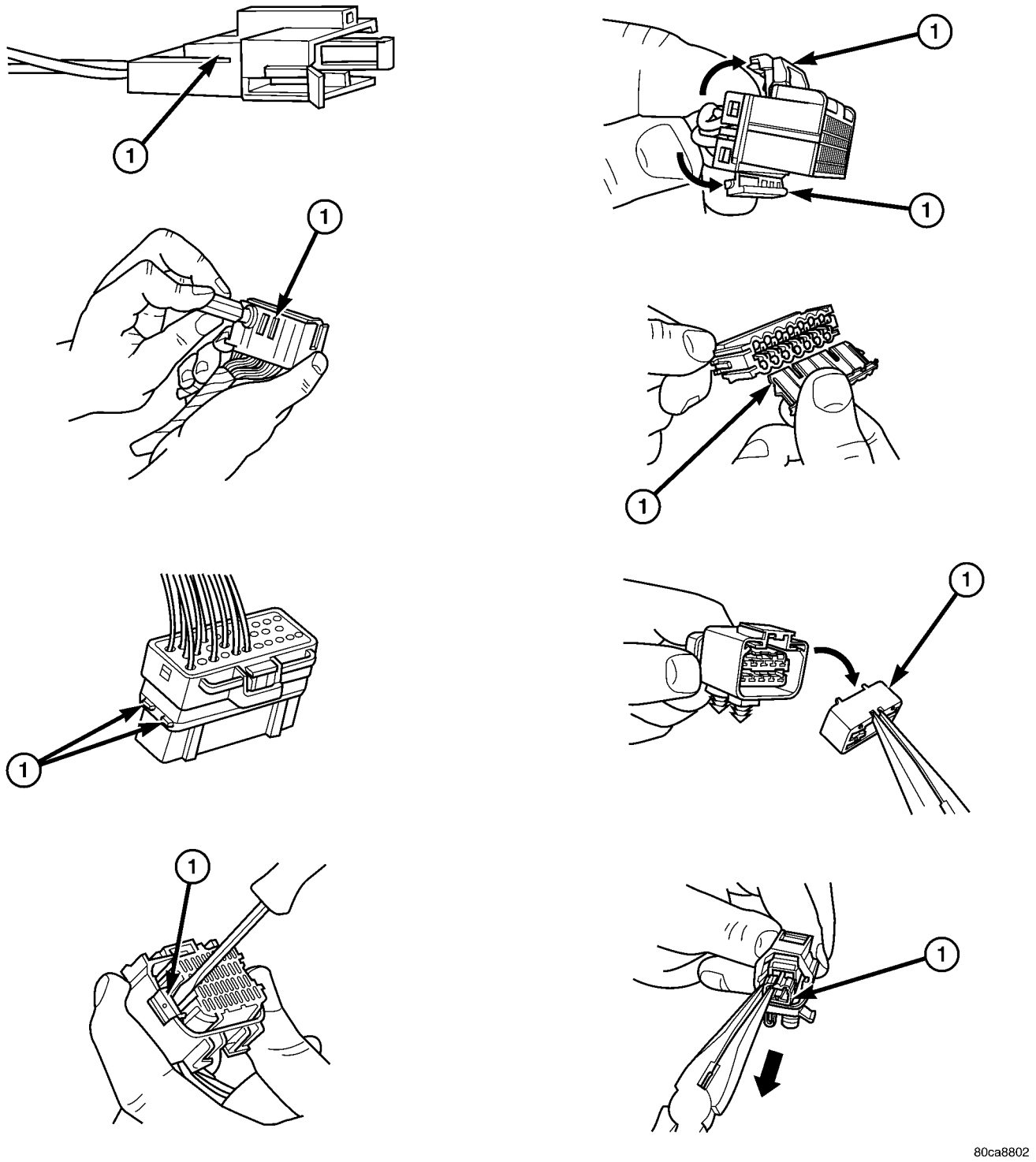

Fig. 11 EXAMPLES OF CONNECTOR SECONDARY TERMINAL LOCKS

1 - Secondary Terminal Lock

CONNECTOR (Continued)

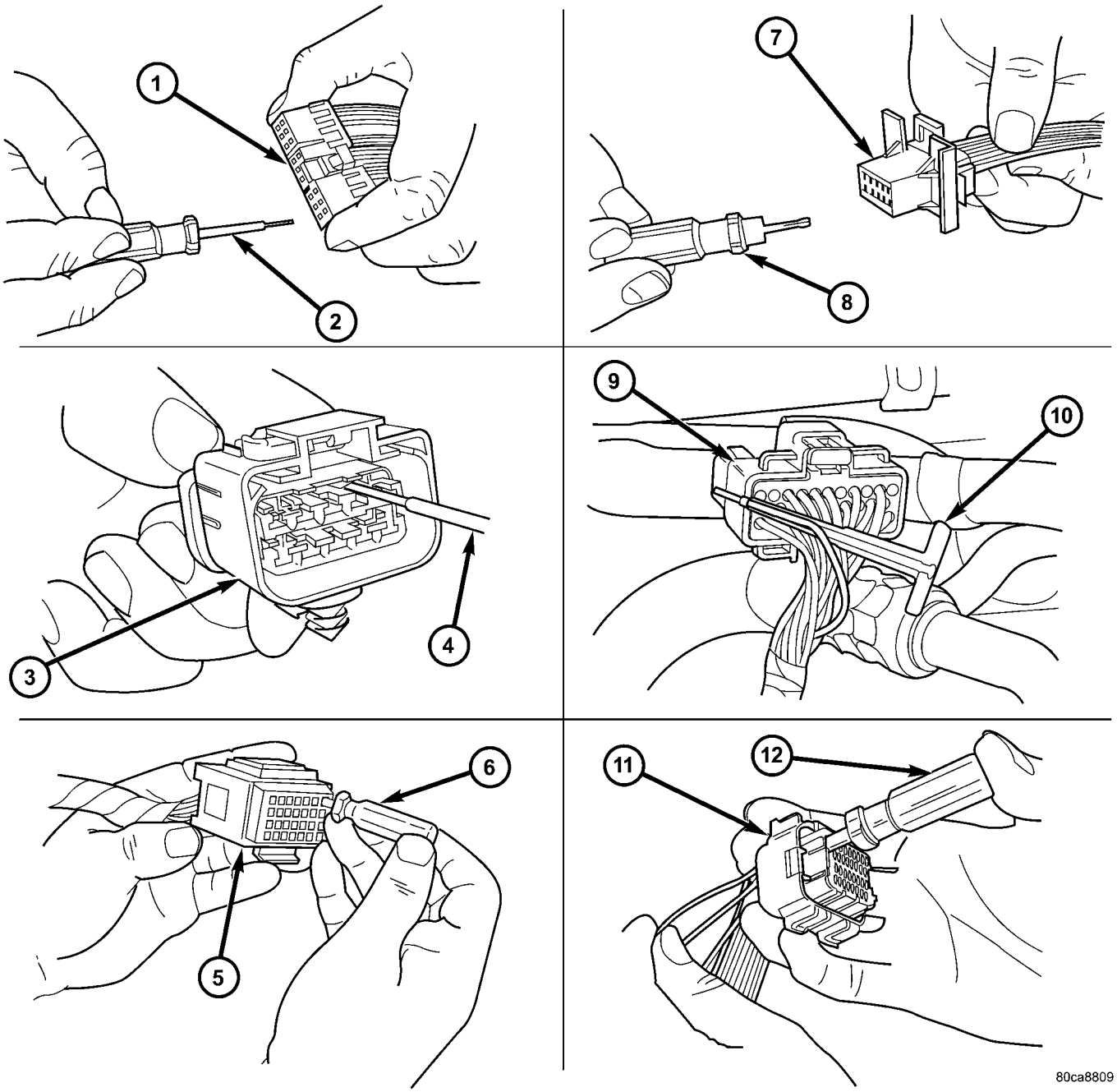

Fig. 12 TERMINAL REMOVAL

1 - TYPICAL CONNECTOR
2 - PICK FROM SPECIAL TOOL KIT 6680
3 - APEX CONNECTOR
4 - PICK FROM SPECIAL TOOL KIT 6680
5 - AUGAT CONNECTOR
6 - SPECIAL TOOL 6932
7 - MOLEX CONNECTOR
8 - SPECIAL TOOL 6742
9 - THOMAS AND BETTS CONNECTOR
10 - SPECIAL TOOL 6934
11 - TYCO CONNECTOR
12 - SPECIAL TOOL 8638

DIODE

REMOVAL

(1) Disconnect the battery.

(2) Locate the diode in the harness, and remove the protective covering.

(3) Remove the diode from the harness, pay attention to the current flow direction (Fig. 13).

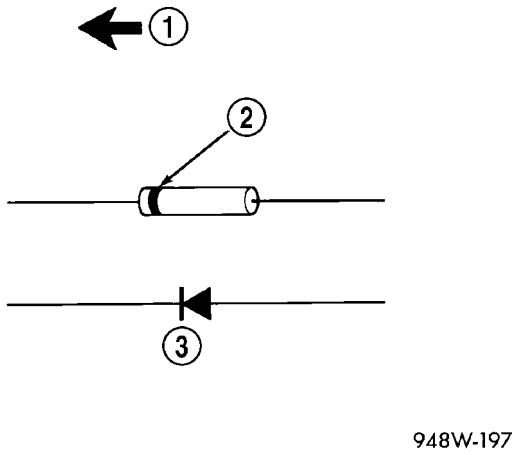

Fig. 13 DIODE IDENTIFICATION

1 - CURRENT FLOW
2 - BAND AROUND DIODE INDICATES CURRENT FLOW
3 - DIODE AS SHOWN IN THE DIAGRAMS

INSTALLATION

(1) Remove the insulation from the wires in the harness. Only remove enough insulation to solder in the new diode.

(2) Install the new diode in the harness, making sure current flow is correct. If necessary, refer to the appropriate wiring diagram for current flow (Fig. 13).

(3) Solder the connection together using rosin core type solder only. **Do not use acid core solder.**

(4) Tape the diode to the harness using electrical tape. Make sure the diode is completely sealed from the elements.

(5) Re-connect the battery and test affected systems.

TERMINAL

REMOVAL

(1) Follow steps for removing terminals described in the connector removal section.

(2) Cut the wire 6 inches from the back of the connector.

INSTALLATION

(1) Select a wire from the terminal repair kit that best matches the color and gage of the wire being repaired.

(2) Cut the repair wire to the proper length and remove one–half (1/2) inch of insulation.

(3) Splice the repair wire to the wire harness (see wire splicing procedure) .

(4) Insert the repaired wire into the connector.

(5) Install the connector locking wedge, if required, and reconnect the connector to its mating half/component.

(6) Re-tape the wire harness starting at 1–1/2 inches behind the connector and 2 inches past the repair.

(7) Connect battery and test all affected systems.

WIRE

STANDARD PROCEDURE - WIRE SPLICING

When splicing a wire, it is important that the correct gage be used as shown in the wiring diagrams.

(1) Remove one-half (1/2) inch of insulation from each wire that needs to be spliced.

(2) Place a piece of adhesive lined heat shrink tubing on one side of the wire. Make sure the tubing will be long enough to cover and seal the entire repair area.

(3) Place the strands of wire overlapping each other inside of the splice clip (Fig. 14).

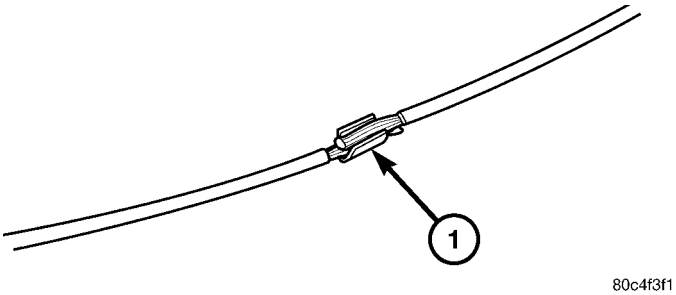

Fig. 14 SPLICE BAND

1 - SPLICE BAND

(4) Using crimping tool, Mopar p/n 05019912AA, crimp the splice clip and wires together (Fig. 15).

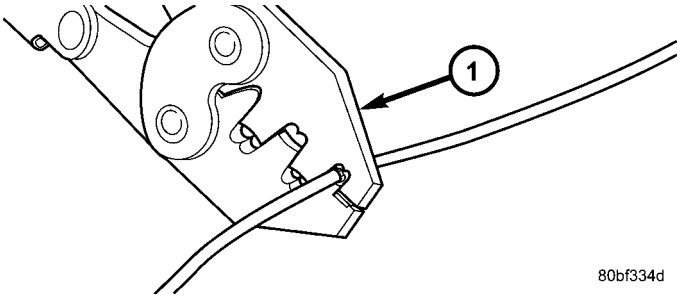

Fig. 15 CRIMPING TOOL

1 - CRIMPING TOOL

(5) Solder the connection together using rosin core type solder only (Fig. 16).

CAUTION: DO NOT USE ACID CORE SOLDER.

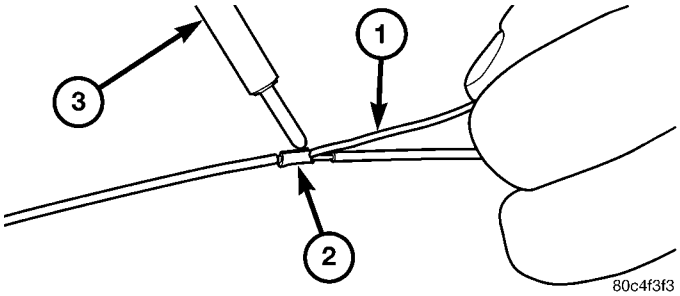

Fig. 16 SOLDER SPLICE

1 - SOLDER
2 - SPLICE BAND
3 - SOLDERING IRON

(6) Center the heat shrink tubing over the joint and heat using a heat gun. Heat the joint until the tubing is tightly sealed and sealant comes out of both ends of the tubing (Fig. 17).

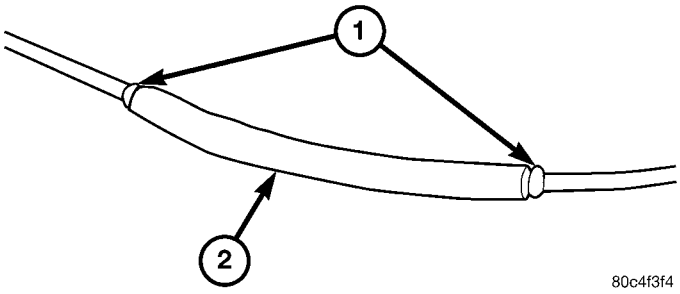

Fig. 17 HEAT SHRINK TUBE

1 - SEALANT
2 - HEAT SHRINK TUBE

8W-02 COMPONENT INDEX

Component	Page
A/C Compressor Clutch Relay	8W-42
A/C Low Pressure Switch	8W-42
A/C Pressure Transducer	8W-42
A/C-Heater Control	8W-42
Accelerator Pedal Position Sensor	8W-30
Airbag Control Module	8W-43
Airbag On/Off Indicator	8W-43
Airbag Squibs	8W-43
Ambient Temperature Sensor	8W-30
Antenna	8W-47
Antenna Module	8W-47
Anti-Lock Brake Module	8W-35
Auto Shut Down Relay	8W-30
Automatic Day/Night Mirror	8W-49
Back-Up Lamp Switch	8W-21
Battery	8W-10
Belt Tension Sensor	8W-43
Blend Door Actuator	8W-42
Blower Motor	8W-42
Blower Motor Relay	8W-42
Blower Motor Resistor Block	8W-42
Body Control Module	8W-45
Boost Pressure Solenoid	8W-30
Brake Lamp Switch	8W-33
Cabin Heater	8W-42
Cabin Heater Relay	8W-42
Camshaft Position Sensor	8W-30
Cargo Lamp	8W-44
Cd Changer	8W-47
Center High Mounted Stop Lamp	8W-51
Cigar Lighter	8W-41
Circuit Breakers	8W-12
Circuit Breakers (JB)	8W-12
Clockspring	8W-33, 41, 43, 47
Clutch Interlock/Upstop Switch	8W-21
Coil On Plugs	8W-30
Coil Rail	8W-30
Compass Mini-Trip Computer	8W-49
Courtesy Lamps	8W-44
Crankshaft Position Sensor	8W-30
Curtain Airbag Squibs	8W-43
Data Link Connector	8W-18
Daytime Running Lamp Relay	8W-50
Defogger Relay	8W-48
Dome Lamp	8W-44
Door Lock Motor/Ajar Switches	8W-61
Door Lock Relay	8W-61
Door Lock Switches	8W-61
Door Unlock Relays	8W-61
EGR Air Flow Control	8W-30
EGR Solenoid	8W-30
EVAP/Purge Solenoid	8W-30
Electric Brake Provision	8W-54
Engine Control Module	8W-30, 31
Engine Coolant Level Sensor	8W-40
Engine Coolant Temperature Sensor	8W-30
Engine Oil Pressure Sensor	8W-30
Engine Oil Pressure Switch	8W-30
Flip-Up Glass Release Motor	8W-61
Flip-Up Glass Release Switch	8W-61
Fog Lamps	8W-50
Front Control Module	8W-30
Front Fog Lamp Relay	8W-50
Front Wiper Motor	8W-53
Fuel Heater	8W-30
Fuel Heater Relay	8W-30
Fuel Injectors	8W-30
Fuel Pressure Sensor	8W-30
Fuel Pressure Solenoid	8W-30
Fuel Pump Module	8W-30
Fuel Pump Relay	8W-30
Fuel Temperature Sensor	8W-30
Fuses	8W-10, 12
Fusible Link	8W-20
Generator	8W-20
Glow Plug Module	8W-30
Glow Plugs	8W-30
Grounds	8W-15
Hands Free Module	8W-55
Hazard Switch/Combination Flasher	8W-52
Headlamp Leveling Switch	8W-50
Headlamps	8W-50
Heated Seat Assemblies	8W-63
Heated Seat Module	8W-63
Heated Seat Switches	8W-63
High Beam Relay	8W-50
High Note Horn	8W-41
Hood Ajar Switch	8W-45
Horn Relay	8W-41
Horn Switch	8W-41
Idle Air Control Motor	8W-30
Ignition Switch	8W-10
Impact Sensors	8W-43
Input Speed Sensor	8W-31
Instrument Cluster	8W-40
Intake Air Temperature Sensor	8W-30
Intrusion Transceiver Module	8W-49
Junction Block	8W-12
Knock Sensor	8W-30
Leveling Motors	8W-50
License Lamp	8W-51
Liftgate Glass	8W-48
Lightbar Lamps	8W-50
Lightbar Switch	8W-50

Component	Page
Line Pressure Sensor	8W-31
Low Beam Relay	8W-50
Manifold Absolute Pressure Sensor	8W-30
Mass Air Flow Sensor	8W-30
Multi-Function Switch	8W-50, 52, 53
Natural Vacuum Leak Detection Pump	8W-30
Occupant Classification Module	8W-43
Output Speed Sensor	8W-31
Overhead Map/Reading Lamp	8W-44
Oxygen Sensors	8W-30
Park Brake Switch	8W-40
Park Lamp Relay	8W-50
Park/Turn Signal Lamps	8W-50, 52
Power Distribution Center	8W-10
Power Mirror Switch	8W-62
Power Mirrors	8W-62
Power Seat Motors	8W-63
Power Seat Switches	8W-63
Power Steering Pressure Switch	8W-30
Power Sunroof Relay	8W-64
Power Window Master Switch	8W-60
Power Window Motors	8W-60
Power Window Relay	8W-60
Powertrain Control Module	8W-30, 31
Radiator Fan Motor	8W-30
Radiator Fan Relays	8W-30
Radio	8W-47
Radio Choke	8W-47
Rear Fog Lamp Relay	8W-51
Rear Power Outlet	8W-41
Rear Power Window Switch	8W-60
Rear Wheel Speed Sensor	8W-35
Rear Wiper Motor	8W-53
Red Brake Warning Indicator Switch	8W-40
Remote Radio Switches	8W-47
Satellite Receiver	8W-47
Seat Belt Switch	8W-40
Seat Belt Tensioners	8W-43
Seat Weight Sensor	8W-43
Sentry Key Remote Entry Module	8W-39
Shifter Assembly	8W-31
Side Impact Sensors	8W-43
Side Marker Lamps	8W-50, 52
Siren	8W-49
Speakers	8W-47
Speed Control Servo	8W-33
Speed Control Switches	8W-33
Splices	8W-70
Starter Motor	8W-21
Starter Motor Relay	8W-21
Sunroof Motor	8W-64
Sunroof Switch	8W-64
Tail/Stop Lamps	8W-51
Tailgate Cylinder Lock Switch	8W-61
Tailgate Flip-Up Ajar Switch	8W-61
Tailgate Lock Motor/Ajar Switch	8W-61
Throttle Position Sensor	8W-30
Trailer Tow Brake Lamp Relay	8W-54
Trailer Tow Connector	8W-54
Trailer Tow Relays	8W-54
Trailer Tow Relays	8W-54
Transfer Case Position Sensor	8W-31
Transmission Control Module	8W-31
Transmission Control Relay	8W-31
Transmission Range Sensor	8W-31
Transmission Solenoid/Pressure Switch Assembly	8W-31
Transmission Solenoid/TRS Assembly	8W-31
Transponder-Tire Pressure-Left Front	8W-49
Transponder-Tire Pressure-Right Front	8W-49
Transponder-Tire Pressure-Right Rear	8W-49
Vacuum Reservoir Solenoid	8W-30
Variable Line Pressure Sensor	8W-31
Visor/Vanity Lamps	8W-44
Washer Fluid Level Switch	8W-53
Washer Pump	8W-53
Water In Fuel Sensor	8W-30
Wheel Speed Sensors	8W-35
Wiper High/Low Relay	8W-53
Wiper On/Off Relay	8W-53

8W-10 POWER DISTRIBUTION

Component	Page
A/C Compressor Clutch	8W-10-25
A/C Compressor Clutch Relay	8W-10-19, 25
Anti-Lock Brake Module	8W-10-11
Auto Shut Down Relay	8W-10-10, 15, 19
Battery	8W-10-10
Blower Motor	8W-10-11
Blower Motor Relay	8W-10-11
Body Control Module	8W-10-21
Boost Pressure Solenoid	8W-10-20
Cabin Heater	8W-10-25
Cabin Heater Relay	8W-10-19, 25
Circuit Breaker No. 1 (JB)	8W-10-26
Circuit Breaker No. 3	8W-10-13
Coil On Plug No. 1	8W-10-17
Coil On Plug No. 2	8W-10-17
Coil On Plug No. 3	8W-10-17
Coil On Plug No. 4	8W-10-17
Coil On Plug No. 5	8W-10-17
Coil On Plug No. 6	8W-10-17
Coil Rail	8W-10-15
Daytime Running Lamp Relay	8W-10-13
Defogger Relay	8W-10-22
EGR Air Flow Control	8W-10-20
EGR Solenoid	8W-10-20
Engine Control Module	8W-10-19, 20
Front Control Module	8W-10-19
Fuel Heater	8W-10-25
Fuel Heater Relay	8W-10-25
Fuel Injector No. 1	8W-10-16
Fuel Injector No. 2	8W-10-16
Fuel Injector No. 3	8W-10-16
Fuel Injector No. 4	8W-10-16
Fuel Injector No. 5	8W-10-16
Fuel Injector No. 6	8W-10-16
Fuel Pump Module	8W-10-25
Fuel Pump Relay	8W-10-25
Fuse 1	8W-10-11
Fuse 2	8W-10-11, 24
Fuse 3	8W-10-13
Fuse 4	8W-10-11
Fuse 5	8W-10-14, 18
Fuse 6	8W-10-10, 15, 19, 22
Fuse 7	8W-10-12
Fuse 8	8W-10-21
Fuse 9	8W-10-22
Fuse 10	8W-10-12
Fuse 11	8W-10-12, 24, 25
Fuse 12	8W-10-12, 14
Fuse 13	8W-10-23, 26
Fuse 14	8W-10-21, 26
Fuse 15	8W-10-24
Fuse 16	8W-10-19, 22
Fuse 17	8W-10-22
Fuse 18	8W-10-22
Fuse 19	8W-10-22
Fuse 21	8W-10-25, 26
Fuse 24	8W-10-23, 25
Fuse 25	8W-10-11, 23
Fuse 26	8W-10-15, 19
Fuse 28	8W-10-21, 26
Fuse 30	8W-10-12, 22
Fuse 31	8W-10-24, 26
Fuse 32	8W-10-13, 26
Fuse 33	8W-10-13
Fuse 34	8W-10-12
Fuse 36	8W-10-26
Fuse 37	8W-10-23
Fuse 38	8W-10-23
Fuse 39	8W-10-23
Fusible Link	8W-10-10
G105	8W-10-10
G106	8W-10-10
G202	8W-10-21
Generator	8W-10-10
Glow Plug Module	8W-10-20
High Beam Relay	8W-10-13
High Speed Radiator Fan Relay	8W-10-11, 19
Horn Relay	8W-10-24
Ignition Switch	8W-10-21, 23, 26
Junction Block	8W-10-12, 13, 22, 23, 24, 26
Lightbar Switch	8W-10-14
Low Beam Relay	8W-10-24
Low Speed Radiator Fan Relay	8W-10-11, 19
Park Lamp Relay	8W-10-13
Power Distribution Center	8W-10-2, 3, 10, 11, 12, 13, 14, 15, 18, 19, 20, 21, 22, 23, 24, 25
Power Sunroof Relay	8W-10-13, 24
Power Window Master Switch	8W-10-23
Power Window Relay	8W-10-23, 24
Powertrain Control Module	8W-10-14, 15, 25
Radiator Fan Motor	8W-10-11
Rear Fog Lamp Relay	8W-10-24
Starter Motor	8W-10-21
Starter Motor Relay	8W-10-21
Trailer Tow Connector	8W-10-12
Trailer Tow Relay	8W-10-12
Transmission Control Module	8W-10-18
Transmission Control Relay	8W-10-14, 18
Transmission Solenoid/Pressure Switch Assembly	8W-10-14
Transmission Solenoid/TRS Assembly	8W-10-18
Vacuum Reservoir Solenoid	8W-10-20
Variable Line Pressure Sensor	8W-10-14

POWER DISTRIBUTION CENTER
GAS

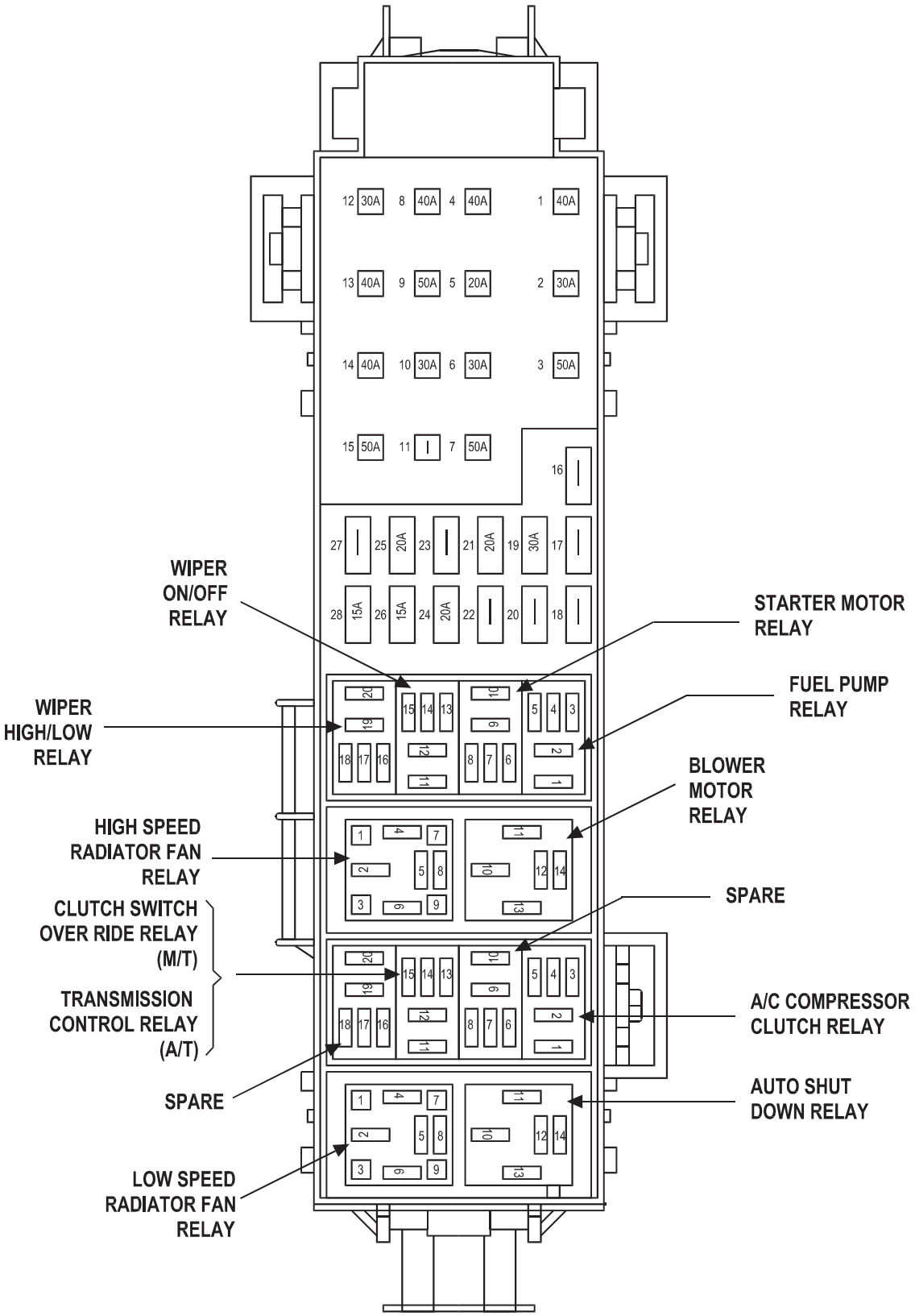

POWER DISTRIBUTION CENTER
(DIESEL)

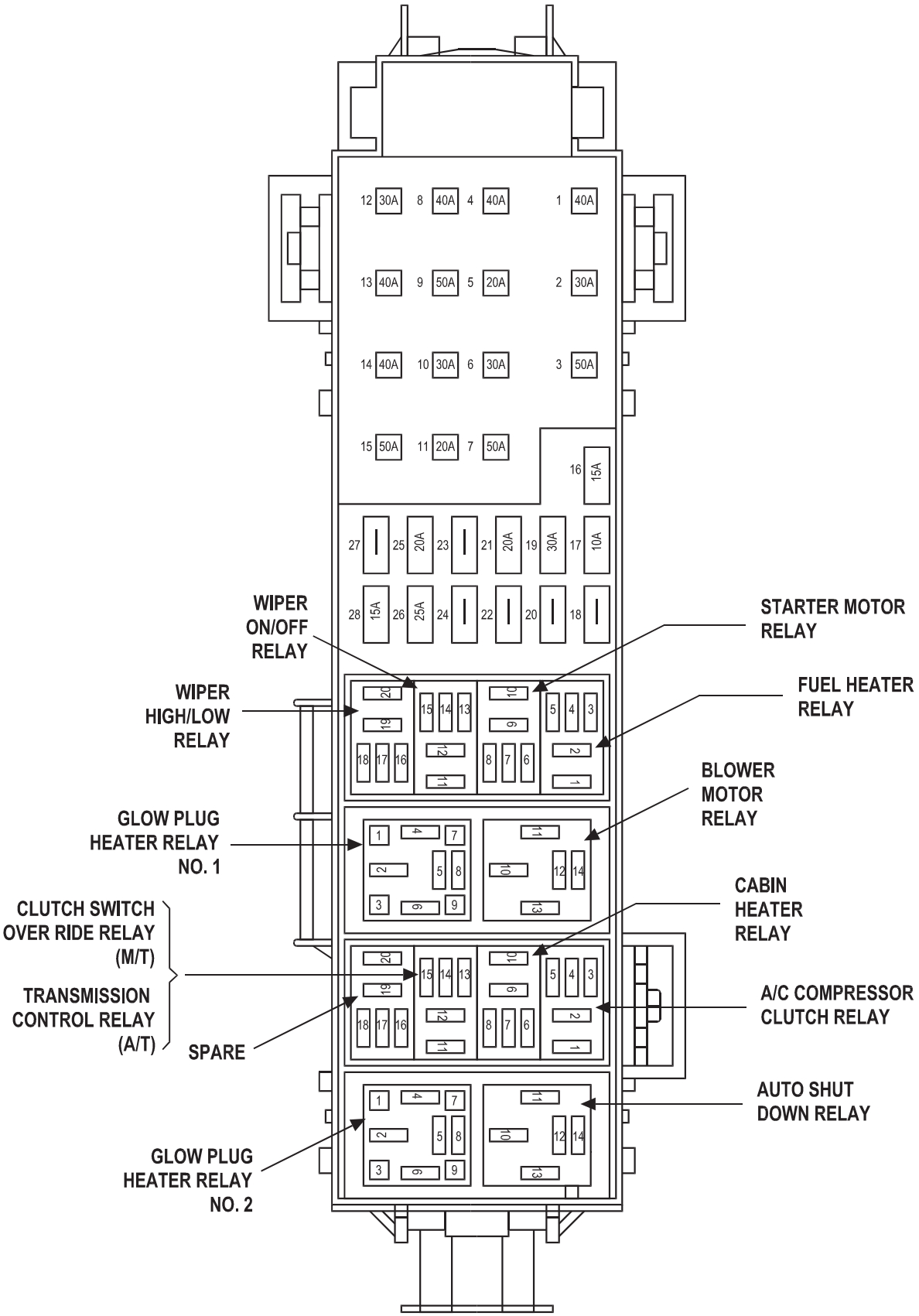

FUSES (GAS)

FUSE NO.	AMPS	FUSED CIRCUIT	FUNCTION
1	40A	A122 12RD	FUSED B(+)
2	30A	A16 12RD/BR	FUSED B(+)
3	50A	A912 10RD	FUSED B(+)
4	40A	A107 12TN/RD ◇◇◇	FUSED B(+)
5	20A	A903 16RD ■■	FUSED B(+)
6	30A	A907 14RD	FUSED B(+)
7	50A	A911 10RD	FUSED B(+)
8	40A	A916 12RD	FUSED B(+)
9	50A	A901 10RD	FUSED B(+)
10	30A	A100 14RD/VT	FUSED B(+)
11	-	-	-
12	30A	A904 14RD	FUSED B(+)
13	40A	A139 12RD/YL	FUSED B(+)
14	40A	A1 12RD	FUSED B(+)
15	50A	A12 10RD/BR	FUSED B(+)
16	-	-	-
17	-	-	-
18	-	-	-
19	30A	A906 12RD	FUSED B(+)
20	-	-	-
21	20A	A112 18OR/RD	FUSED B(+)
22	-	-	-
23	-	-	-
24	20A	A209 18RD	FUSED B(+)
		A209 18RD	FUSED B(+)
25	20A	A200 12RD/DG ◇◇◇	FUSED B(+)
26	15A	F142 16PK/GY	FUSED ASD RELAY OUTPUT
27	-	-	-
28	15A	F26 20PK/OR	FUSED IGNITION SWITCH OUTPUT (START)
		F26 20PK/OR	FUSED IGNITION SWITCH OUTPUT (START)

◇◇◇ ABS
■■ A/T

FUSES
(DIESEL)

FUSE NO.	AMPS	FUSED CIRCUIT	FUNCTION
1	40A	A122 12RD	FUSED B(+)
2	30A	A16 12RD/BR	FUSED B(+)
3	50A	A912 10RD	FUSED B(+)
4	40A	A107 12TN/RD ◇◇◇	FUSED B(+)
5	20A	A903 16RD ■■	FUSED B(+)
6	30A	A907 14RD	FUSED B(+)
7	50A	A911 10RD	FUSED B(+)
8	40A	A916 12RD	FUSED B(+)
9	50A	A901 10RD	FUSED B(+)
10	30A	A100 14RD/VT	FUSED B(+)
11	20A	A34 16RD/WT	FUSED B(+)
12	30A	A904 14RD	FUSED B(+)
13	40A	A139 12RD/YL	FUSED B(+)
14	40A	A1 12RD	FUSED B(+)
15	50A	A12 10RD/BR	FUSED B(+)
16	15A	K347 20BR/YL	FUSED ASD RELAY OUTPUT
17	10A	A129 18RD/BR	FUSED B(+)
18	-	-	-
19	30A	A906 12RD	FUSED B(+)
20	-	-	-
21	20A	A112 18OR/RD	FUSED B(+)
22	-	-	-
23	-	-	-
24	-	-	-
25	20A	A200 12RD/DG ◇◇◇	FUSED B(+)
26	25A	K345 16BR/RD	FUSED ASD RELAY OUTPUT
27	-	-	-
28	15A	F26 20PK/OR	FUSED IGNITION SWITCH OUTPUT (START)
		F26 20PK/OR	FUSED IGNITION SWITCH OUTPUT (START)

◇◇◇ ABS
■■ A/T

A/C COMPRESSOR CLUTCH RELAY

CAVITY	CIRCUIT	FUNCTION
30	INTERNAL	FUSED B(+)
85	C13 20 LB/OR	A/C CLUTCH RELAY CONTROL
86	F1 18DB ○	FUSED IGNITION SWITCH OUTPUT (RUN-START)
86	INTERNAL ○○	FUSED ASD RELAY OUTPUT
87	C3 18DB/YL ○	A/C CLUTCH RELAY OUTPUT
87A	-	-

AUTO SHUT DOWN RELAY

CAVITY	CIRCUIT	FUNCTION
30	INTERNAL	FUSED B(+)
85	K342 20BR/WT	ASD RELAY CONTROL
86	INTERNAL	FUSED B(+)
87	INTERNAL	ASD RELAY OUTPUT
87A	A142 14DG/OR	-

BLOWER MOTOR RELAY

CAVITY	CIRCUIT	FUNCTION
30	INTERNAL	FUSED B(+)
85	Z932 20BK	GROUND
86	F20 20PK/GY	FUSED IGNITION SWITCH OUTPUT (RUN)
87	A111 12 DG/RD	BLOWER MOTOR RELAY OUTPUT
87A	-	-

○ GAS
○○ DIESEL

CABIN HEATER RELAY (DIESEL)

CAVITY	CIRCUIT	FUNCTION
30	INTERNAL	FUSED B(+)
85	K132 20DB/LB	CABIN HEATER RELAY CONTROL
86	INTERNAL	FUSED ASD RELAY OUTPUT
87	A119 18RD/OR	CABIN HEATER RELAY OUTPUT
87A	-	-

FUEL HEATER RELAY (DIESEL)

CAVITY	CIRCUIT	FUNCTION
30	INTERNAL	FUSED B(+)
85	Z932 20BK	GROUND
86	INTERNAL	FUSED IGNITION SWITCH OUTPUT (RUN)
87	A993 16RD	FUEL HEATER RELAY OUTPUT
87A	-	-

FUEL PUMP RELAY (GAS)

CAVITY	CIRCUIT	FUNCTION
30	INTERNAL	FUSED B(+)
85	K31 20BR	FUEL PUMP RELAY CONTROL
86	INTERNAL	FUSED IGNITION SWITCH OUTPUT (RUN-START)
87	N1 18DG/OR	FUEL PUMP RELAY OUTPUT
87A	-	-

HIGH SPEED RADIATOR FAN RELAY (GAS)

CAVITY	CIRCUIT	FUNCTION
30	INTERNAL	FUSED B(+)
85	N112 20DB/OR	HIGH SPEED RAD FAN RELAY CONTROL
86	INTERNAL	FUSED IGNITION SWITCH OUTPUT (RUN-START)
87	N24 12 DG/DB	HIGH SPEED RAD FAN RELAY OUTPUT
87A	-	-

LOW SPEED RADIATOR FAN RELAY (GAS)

CAVITY	CIRCUIT	FUNCTION
30	INTERNAL	FUSED B(+)
85	N201 20DB/LG	LOW SPEED RAD FAN RELAY CONTROL
86	INTERNAL	FUSED IGNITION SWITCH OUTPUT (RUN-START)
87	N23 12DB/LG	LOW SPEED RAD FAN RELAY OUTPUT
87A	-	-

STARTER MOTOR RELAY

CAVITY	CIRCUIT	FUNCTION
30	A916 12RD	FUSED B(+)
85	T752 20DG/OR	ENGINE STARTER MOTOR RELAY CONTROL
86	INTERNAL	FUSED IGNITION SWITCH OUTPUT (START)
87	T750 12 YL/GY	STARTER MOTOR RELAY OUTPUT
87A	-	-

TRANSMISSION CONTROL RELAY (A/T)

CAVITY	CIRCUIT	FUNCTION
30	INTERNAL	FUSED B(+)
85	Z932 20BK	GROUND
86	T515 20YL/DB	TRANSMISSION CONTROL RELAY CONTROL
87	T16 16YL/OR	TRANSMISSION CONTROL RELAY OUTPUT
87A	-	-

WIPER HIGH/LOW RELAY

CAVITY	CIRCUIT	FUNCTION
30	INTERNAL	FRONT WIPER ON/OFF RELAY OUTPUT
85	W2 20BR/LG	FRONT WIPER HIGH/LOW RELAY CONTROL
86	A5 16 RD/VT	FUSED IGNITION SWITCH OUTPUT (RUN-ACC)
87	W4 16 BR/OR	FRONT WIPER HIGH/LOW RELAY HIGH SPEED OUTPUT
87A	W3 16BR/WT	FRONT WIPER HIGH/LOW RELAY LOW SPEED OUTPUT

WIPER ON/OFF RELAY

CAVITY	CIRCUIT	FUNCTION
30	INTERNAL	FRONT WIPER ON/OFF RELAY OUTPUT
85	W6 20BR/LB	FRONT WIPER ON/OFF RELAY CONTROL
86	A5 16RD/VT	FUSED IGNITION SWITCH OUTPUT (RUN-ACC)
87	A5 16RD/VT	FUSED IGNITION SWITCH OUTPUT (RUN-ACC)
87A	W7 16BR/GY	FRONT WIPER PARK SWITCH SENSE

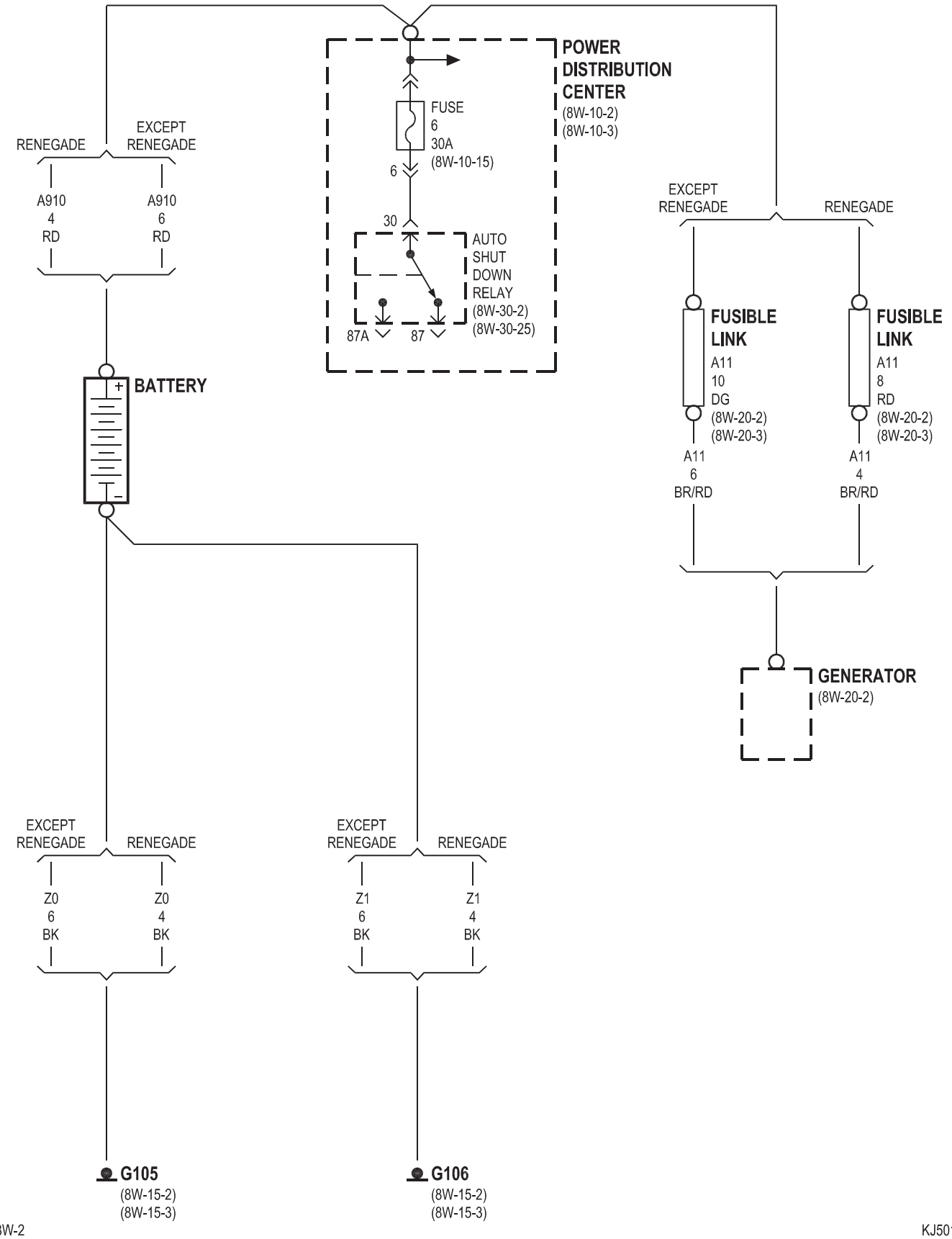
POWER
DISTRIBUTION
CENTER
(8W-10-2)
(8W-10-3)
FUSE
6
30A
(8W-10-15)
6
30
AUTO
SHUT
DOWN
RELAY
(8W-30-2)
(8W-30-25)
87A
87
RENEGADE
EXCEPT
RENEGADE
A910
4
RD
A910
6
RD
BATTERY
+
–
EXCEPT
RENEGADE
RENEGADE
FUSIBLE
LINK
A11
10
DG
(8W-20-2)
(8W-20-3)
FUSIBLE
LINK
A11
8
RD
(8W-20-2)
(8W-20-3)
A11
6
BR/RD
A11
4
BR/RD
GENERATOR
(8W-20-2)
EXCEPT
RENEGADE
RENEGADE
Z0
6
BK
Z0
4
BK
EXCEPT
RENEGADE
RENEGADE
Z1
6
BK
Z1
4
BK
G105
(8W-15-2)
(8W-15-3)
G106
(8W-15-2)
(8W-15-3)

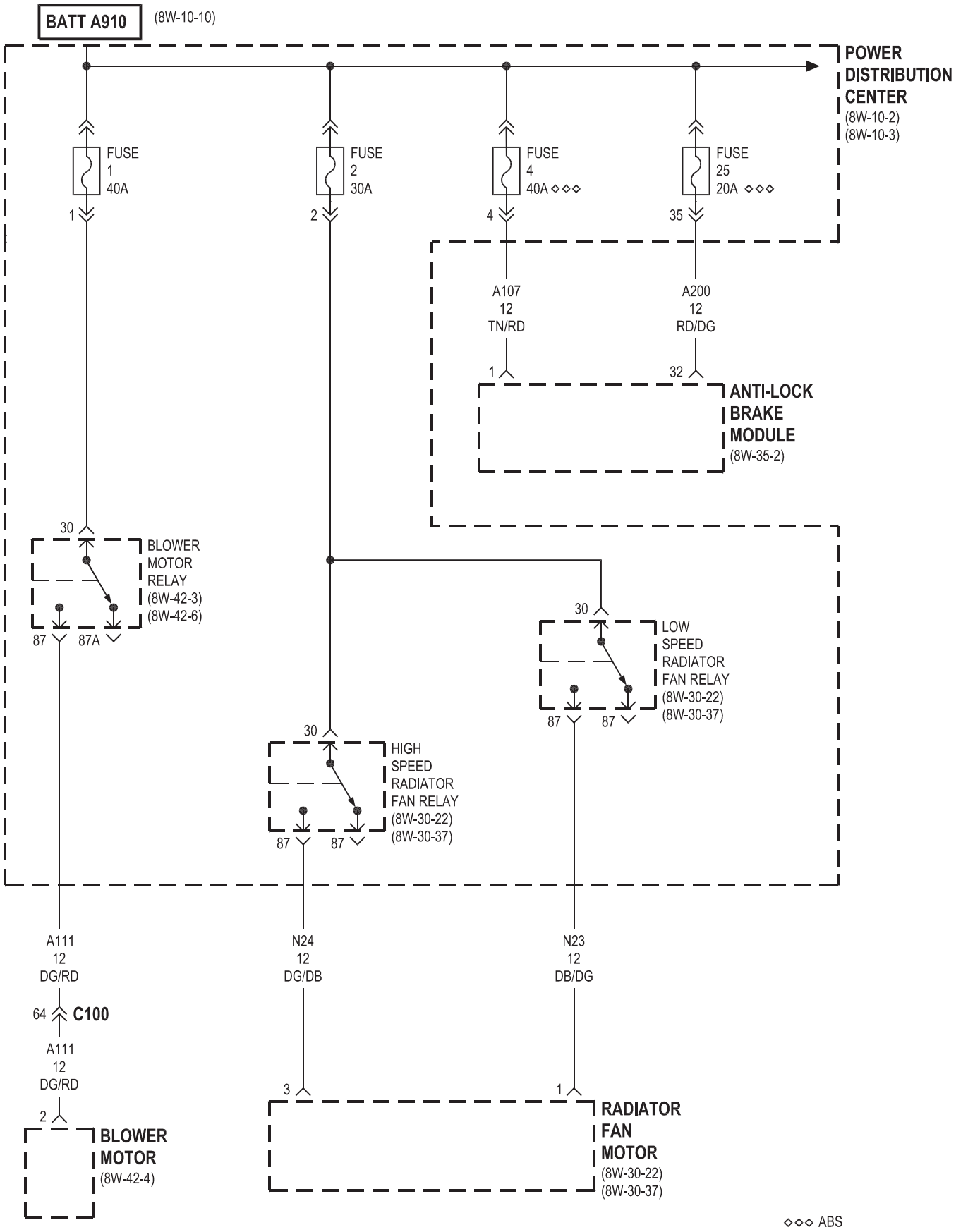
BATT A910
(8W-10-10)
POWER DISTRIBUTION CENTER
(8W-10-2)
(8W-10-3)
FUSE 1 40A
FUSE 2 30A
FUSE 4 40A ◇◇◇
FUSE 25 20A ◇◇◇
1
2
4
35
A107 12 TN/RD
A200 12 RD/DG
1
32
ANTI-LOCK BRAKE MODULE
(8W-35-2)
30
BLOWER MOTOR RELAY
(8W-42-3)
(8W-42-6)
87
87A
30
LOW SPEED RADIATOR FAN RELAY
(8W-30-22)
(8W-30-37)
87
87
30
HIGH SPEED RADIATOR FAN RELAY
(8W-30-22)
(8W-30-37)
87
87
A111 12 DG/RD
64
C100
A111 12 DG/RD
2
BLOWER MOTOR
(8W-42-4)
N24 12 DG/DB
3
N23 12 DB/DG
1
RADIATOR FAN MOTOR
(8W-30-22)
(8W-30-37)
◇◇◇ ABS

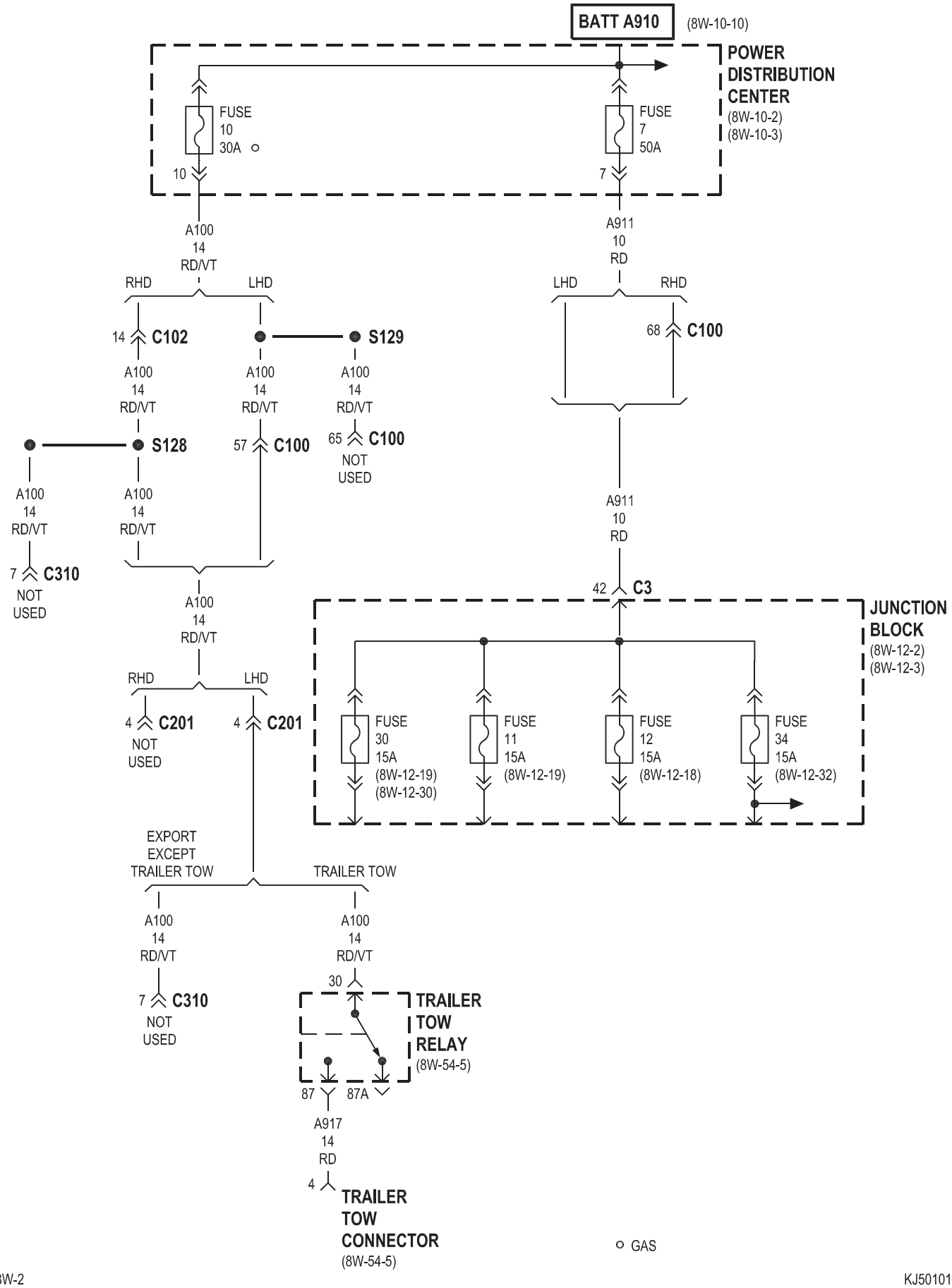
BATT A910
(8W-10-10)
POWER DISTRIBUTION CENTER
(8W-10-2)
(8W-10-3)
FUSE 10 30A
FUSE 7 50A
10
7
A100 14 RD/VT
A911 10 RD
RHD
LHD
14 C102
S129
68 C100
A100 14 RD/VT
S128
57 C100
65 C100
NOT USED
7 C310
NOT USED
42 C3
JUNCTION BLOCK
(8W-12-2)
(8W-12-3)
FUSE 30 15A (8W-12-19) (8W-12-30)
FUSE 11 15A (8W-12-19)
FUSE 12 15A (8W-12-18)
FUSE 34 15A (8W-12-32)
4 C201
EXPORT EXCEPT TRAILER TOW
TRAILER TOW
30
TRAILER TOW RELAY
(8W-54-5)
87
87A
A917 14 RD
4
TRAILER TOW CONNECTOR
(8W-54-5)
GAS

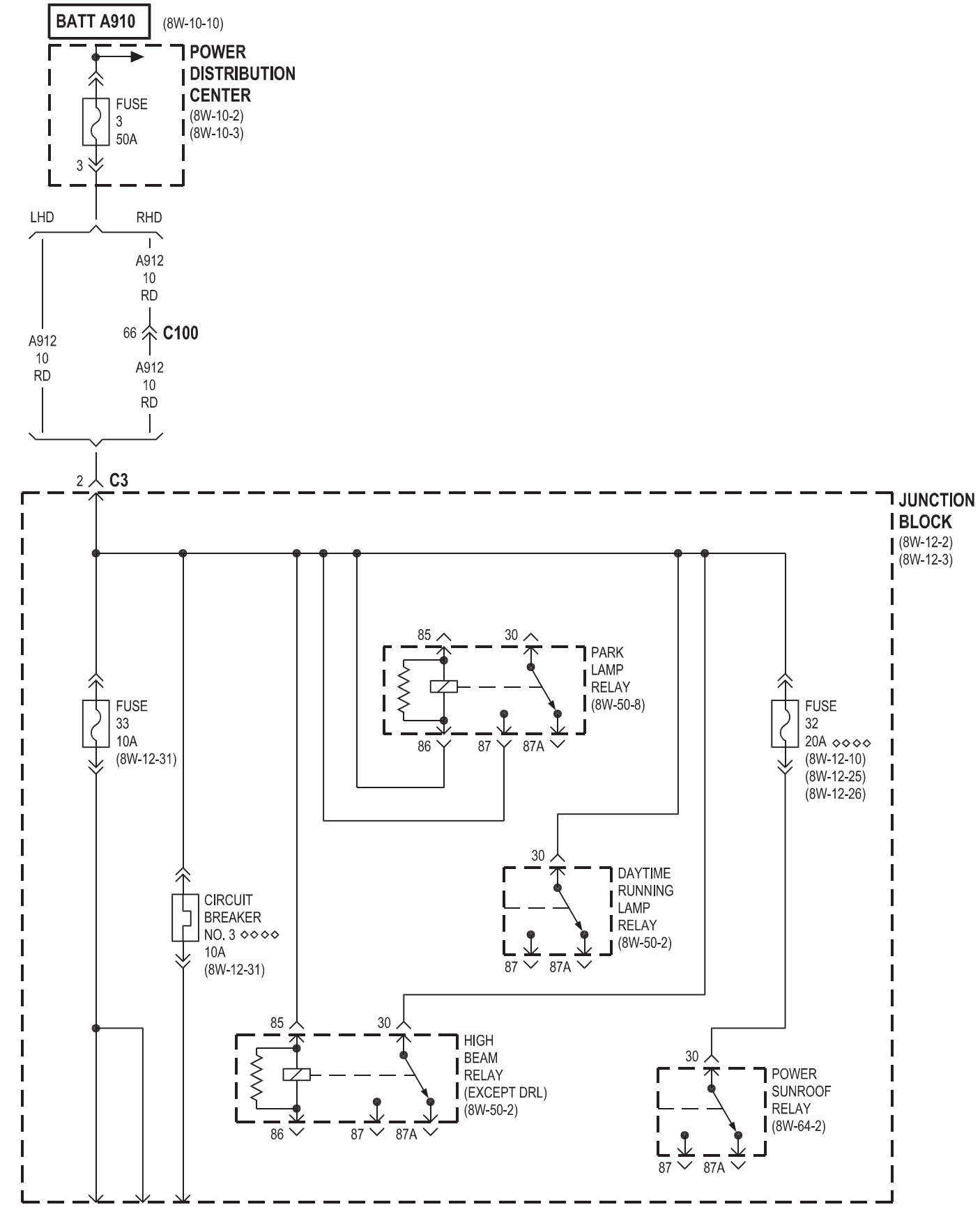
BATT A910
(8W-10-10)
POWER DISTRIBUTION CENTER
(8W-10-2)
(8W-10-3)
FUSE 3 50A
3
LHD
RHD
A912 10 RD
66
C100
A912 10 RD
A912 10 RD
2
C3
JUNCTION BLOCK
(8W-12-2)
(8W-12-3)
FUSE 33 10A (8W-12-31)
CIRCUIT BREAKER NO. 3 ◇◇◇◇ 10A (8W-12-31)
85
30
PARK LAMP RELAY (8W-50-8)
86
87
87A
FUSE 32 20A ◇◇◇◇ (8W-12-10) (8W-12-25) (8W-12-26)
30
DAYTIME RUNNING LAMP RELAY (8W-50-2)
87
87A
85
30
HIGH BEAM RELAY (EXCEPT DRL) (8W-50-2)
86
87
87A
30
POWER SUNROOF RELAY (8W-64-2)
87
87A

◇◇◇◇ EXCEPT BASE

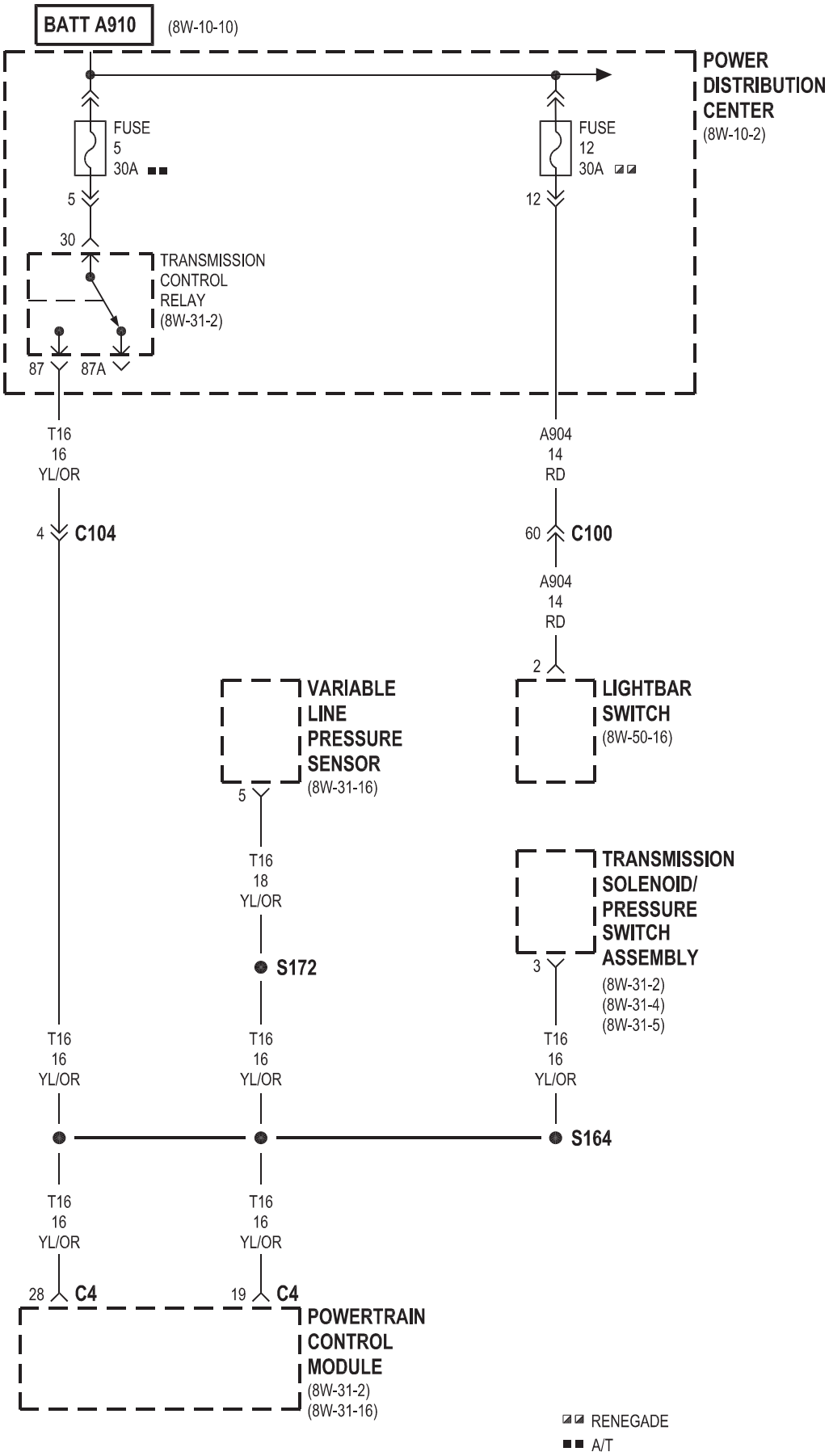
BATT A910
(8W-10-10)
POWER DISTRIBUTION CENTER
(8W-10-2)
FUSE 5 30A
FUSE 12 30A
5
30
12
TRANSMISSION CONTROL RELAY
(8W-31-2)
87
87A
T16 16 YL/OR
A904 14 RD
4
C104
60
C100
A904 14 RD
2
VARIABLE LINE PRESSURE SENSOR
(8W-31-16)
LIGHTBAR SWITCH
(8W-50-16)
5
T16 18 YL/OR
S172
TRANSMISSION SOLENOID/ PRESSURE SWITCH ASSEMBLY
(8W-31-2)
(8W-31-4)
(8W-31-5)
3
T16 16 YL/OR
T16 16 YL/OR
T16 16 YL/OR
S164
T16 16 YL/OR
T16 16 YL/OR
28
C4
19
C4
POWERTRAIN CONTROL MODULE
(8W-31-2)
(8W-31-16)
RENEGADE
A/T

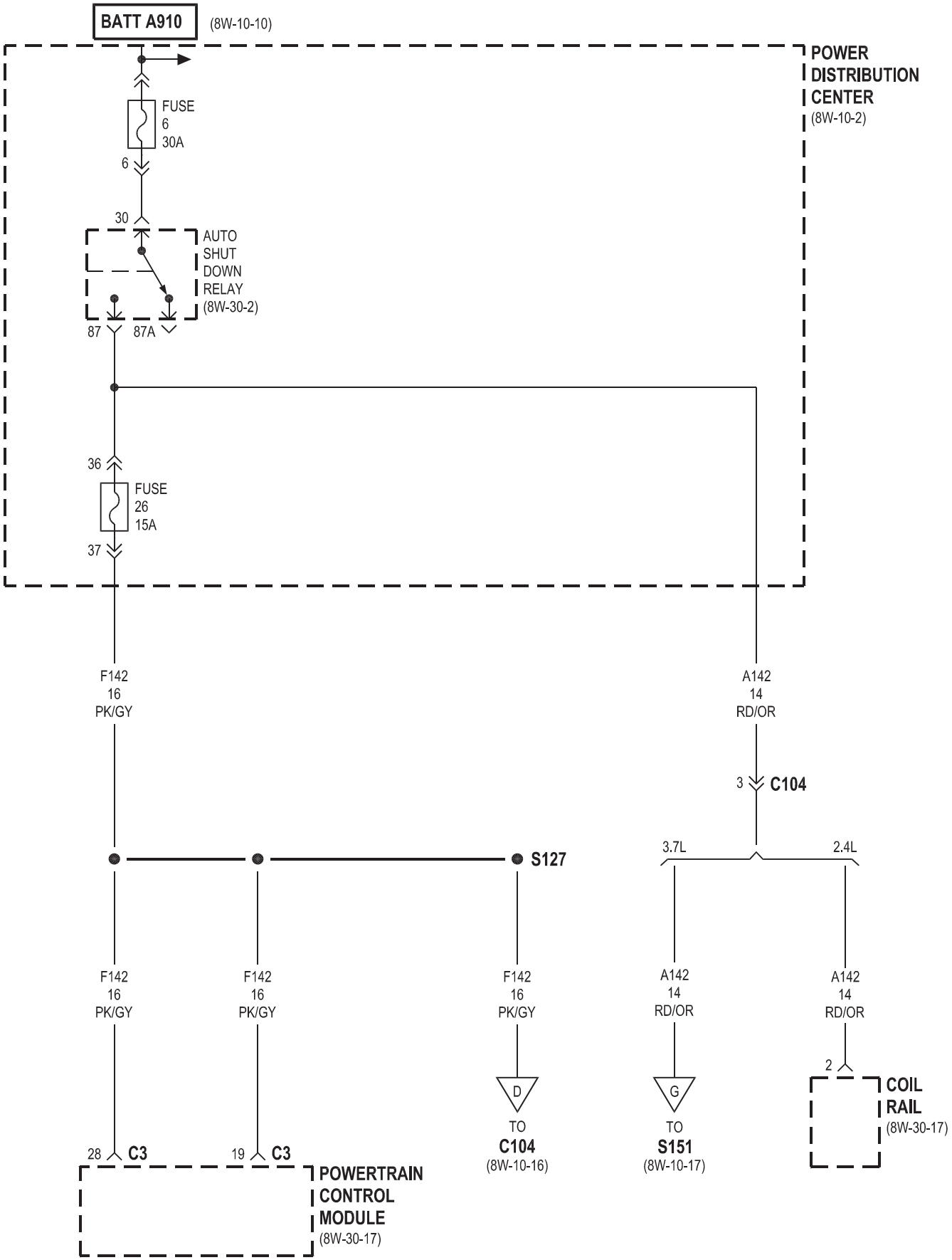
BATT A910
(8W-10-10)
POWER DISTRIBUTION CENTER
(8W-10-2)
FUSE 6 30A
6
30
AUTO SHUT DOWN RELAY
(8W-30-2)
87
87A
36
FUSE 26 15A
37
F142 16 PK/GY
A142 14 RD/OR
3
C104
S127
3.7L
2.4L
F142 16 PK/GY
F142 16 PK/GY
F142 16 PK/GY
A142 14 RD/OR
A142 14 RD/OR
D
TO C104
(8W-10-16)
G
TO S151
(8W-10-17)
2
COIL RAIL
(8W-30-17)
28
C3
19
C3
POWERTRAIN CONTROL MODULE
(8W-30-17)

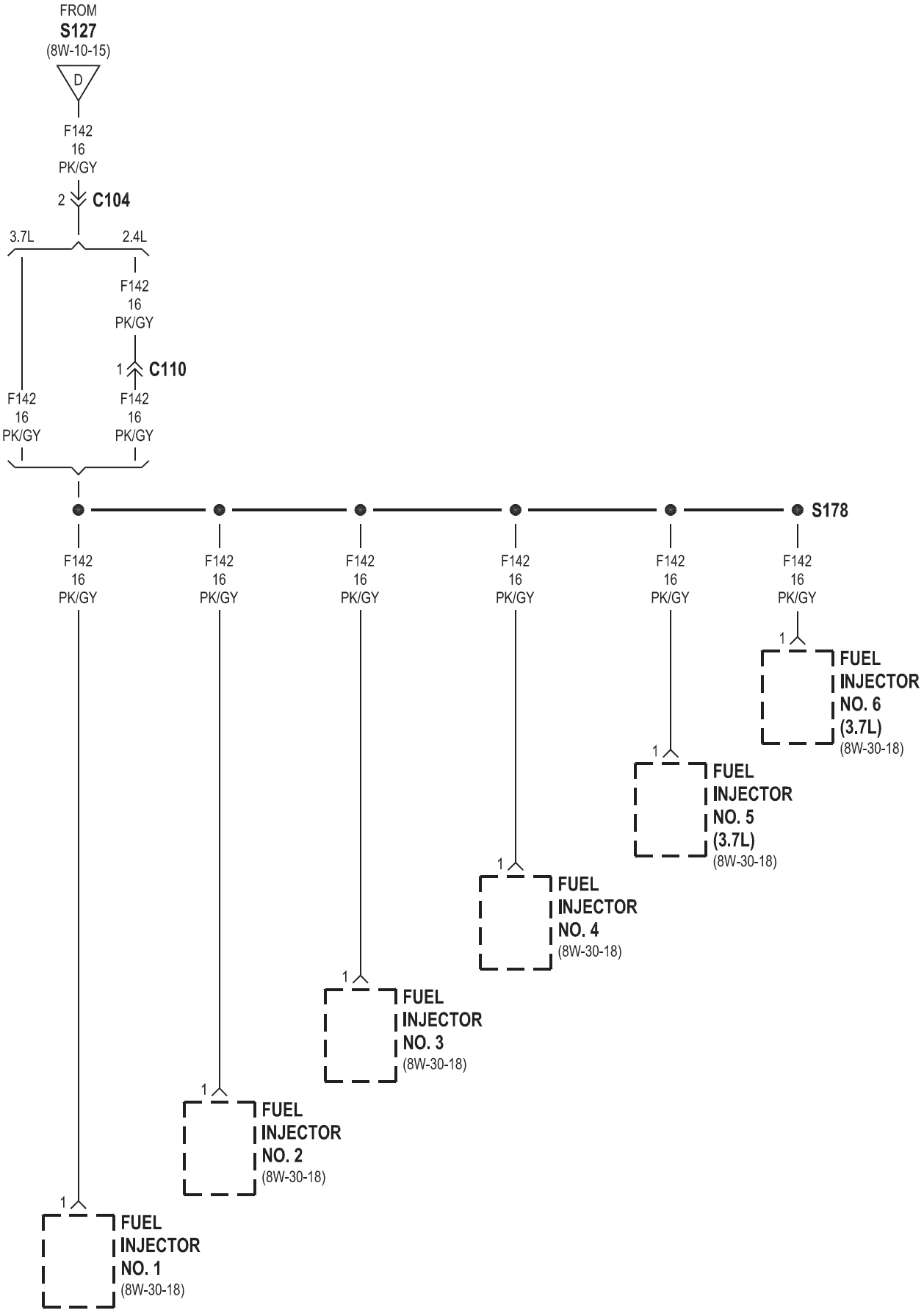
FROM
S127
(8W-10-15)
D
F142
16
PK/GY
2
C104
3.7L
2.4L
F142
16
PK/GY
1
C110
F142
16
PK/GY
F142
16
PK/GY
S178
F142
16
PK/GY
1
FUEL
INJECTOR
NO. 6
(3.7L)
(8W-30-18)
FUEL
INJECTOR
NO. 5
(3.7L)
(8W-30-18)
FUEL
INJECTOR
NO. 4
(8W-30-18)
FUEL
INJECTOR
NO. 3
(8W-30-18)
FUEL
INJECTOR
NO. 2
(8W-30-18)
FUEL
INJECTOR
NO. 1
(8W-30-18)

3.7L GAS

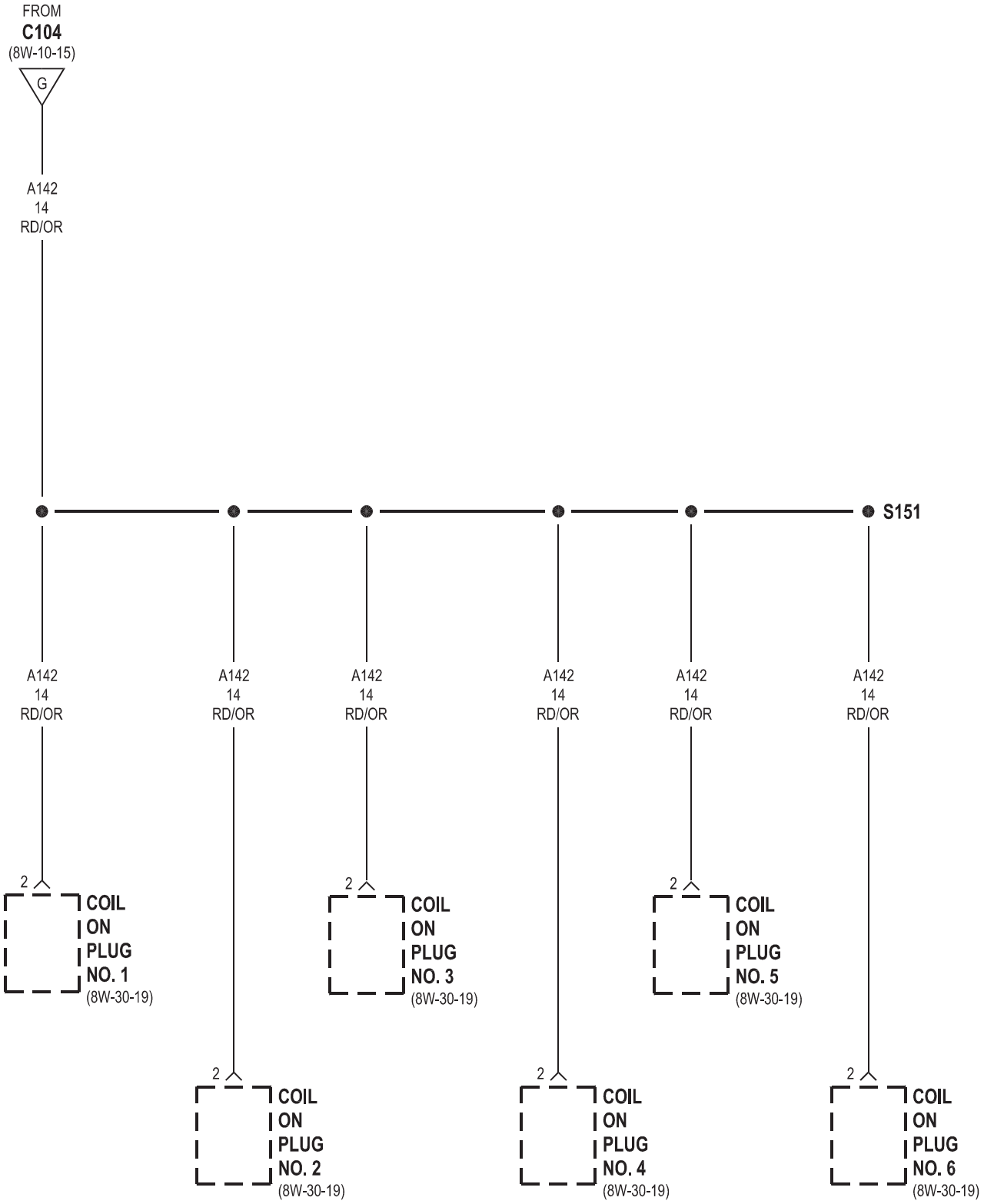
FROM
C104
(8W-10-15)
G
A142
14
RD/OR
S151
A142
14
RD/OR
2
COIL
ON
PLUG
NO. 1
(8W-30-19)
COIL
ON
PLUG
NO. 2
(8W-30-19)
COIL
ON
PLUG
NO. 3
(8W-30-19)
COIL
ON
PLUG
NO. 4
(8W-30-19)
COIL
ON
PLUG
NO. 5
(8W-30-19)
COIL
ON
PLUG
NO. 6
(8W-30-19)

DIESEL A/T

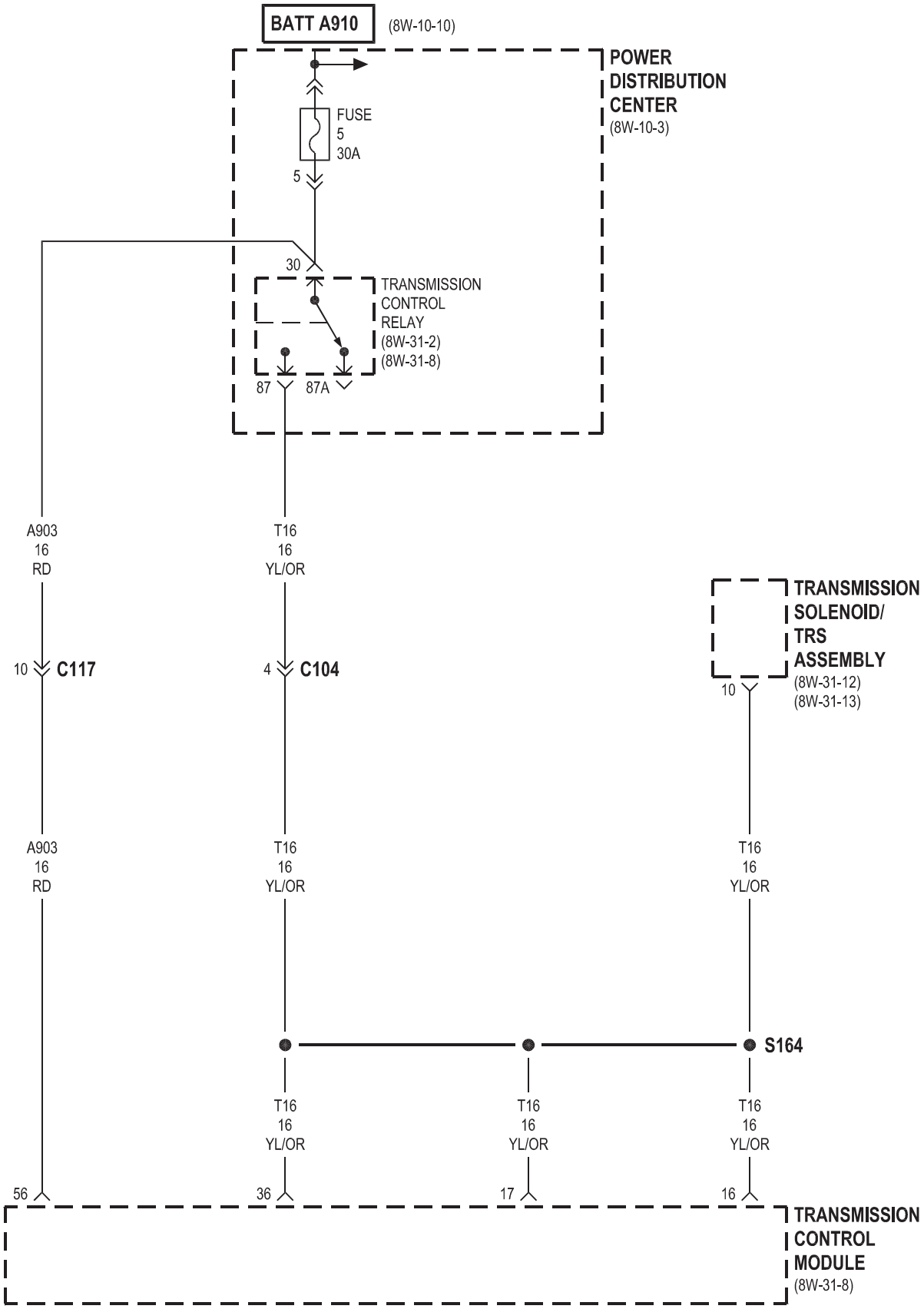
BATT A910
(8W-10-10)
POWER DISTRIBUTION CENTER
(8W-10-3)
FUSE
5
30A
5
30
TRANSMISSION CONTROL RELAY
(8W-31-2)
(8W-31-8)
87
87A
A903
16
RD
T16
16
YL/OR
TRANSMISSION SOLENOID/ TRS ASSEMBLY
(8W-31-12)
(8W-31-13)
10
C117
4
C104
10
A903
16
RD
T16
16
YL/OR
T16
16
YL/OR
S164
T16
16
YL/OR
T16
16
YL/OR
T16
16
YL/OR
56
36
17
16
TRANSMISSION CONTROL MODULE
(8W-31-8)

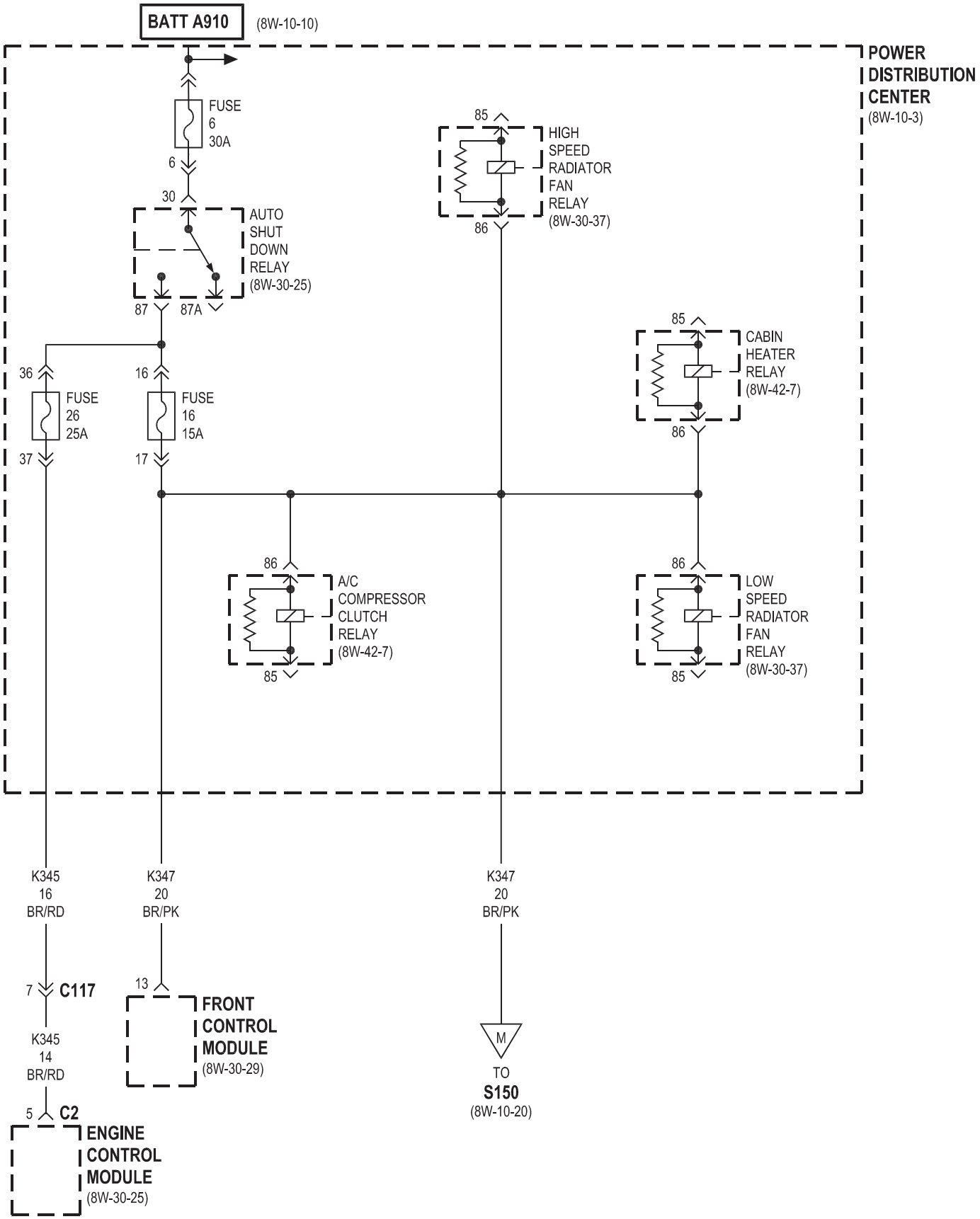
BATT A910
(8W-10-10)
POWER DISTRIBUTION CENTER
(8W-10-3)
FUSE 6 30A
6
30
AUTO SHUT DOWN RELAY
(8W-30-25)
87
87A
85
HIGH SPEED RADIATOR FAN RELAY
(8W-30-37)
86
85
CABIN HEATER RELAY
(8W-42-7)
86
36
16
FUSE 26 25A
FUSE 16 15A
37
17
86
A/C COMPRESSOR CLUTCH RELAY
(8W-42-7)
85
86
LOW SPEED RADIATOR FAN RELAY
(8W-30-37)
85
K345 16 BR/RD
K347 20 BR/PK
K347 20 BR/PK
7
C117
K345 14 BR/RD
5
C2
ENGINE CONTROL MODULE
(8W-30-25)
13
FRONT CONTROL MODULE
(8W-30-29)
M
TO
S150
(8W-10-20)

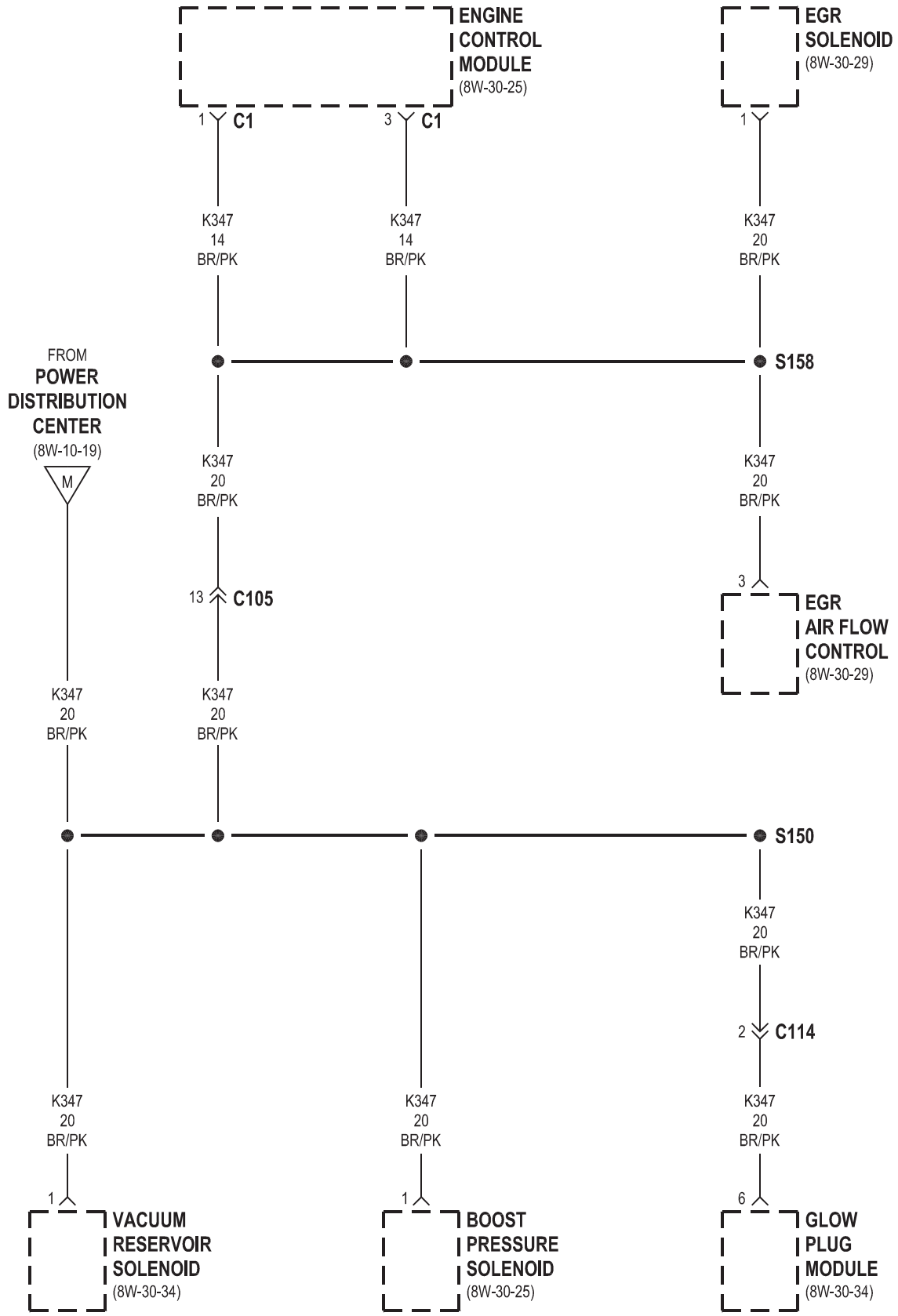
ENGINE CONTROL MODULE (8W-30-25)
EGR SOLENOID (8W-30-29)
1 C1
3 C1
1
K347 14 BR/PK
K347 14 BR/PK
K347 20 BR/PK
FROM POWER DISTRIBUTION CENTER (8W-10-19)
M
S158
K347 20 BR/PK
K347 20 BR/PK
13 C105
3
EGR AIR FLOW CONTROL (8W-30-29)
K347 20 BR/PK
K347 20 BR/PK
S150
K347 20 BR/PK
2 C114
K347 20 BR/PK
K347 20 BR/PK
K347 20 BR/PK
1
1
6
VACUUM RESERVOIR SOLENOID (8W-30-34)
BOOST PRESSURE SOLENOID (8W-30-25)
GLOW PLUG MODULE (8W-30-34)

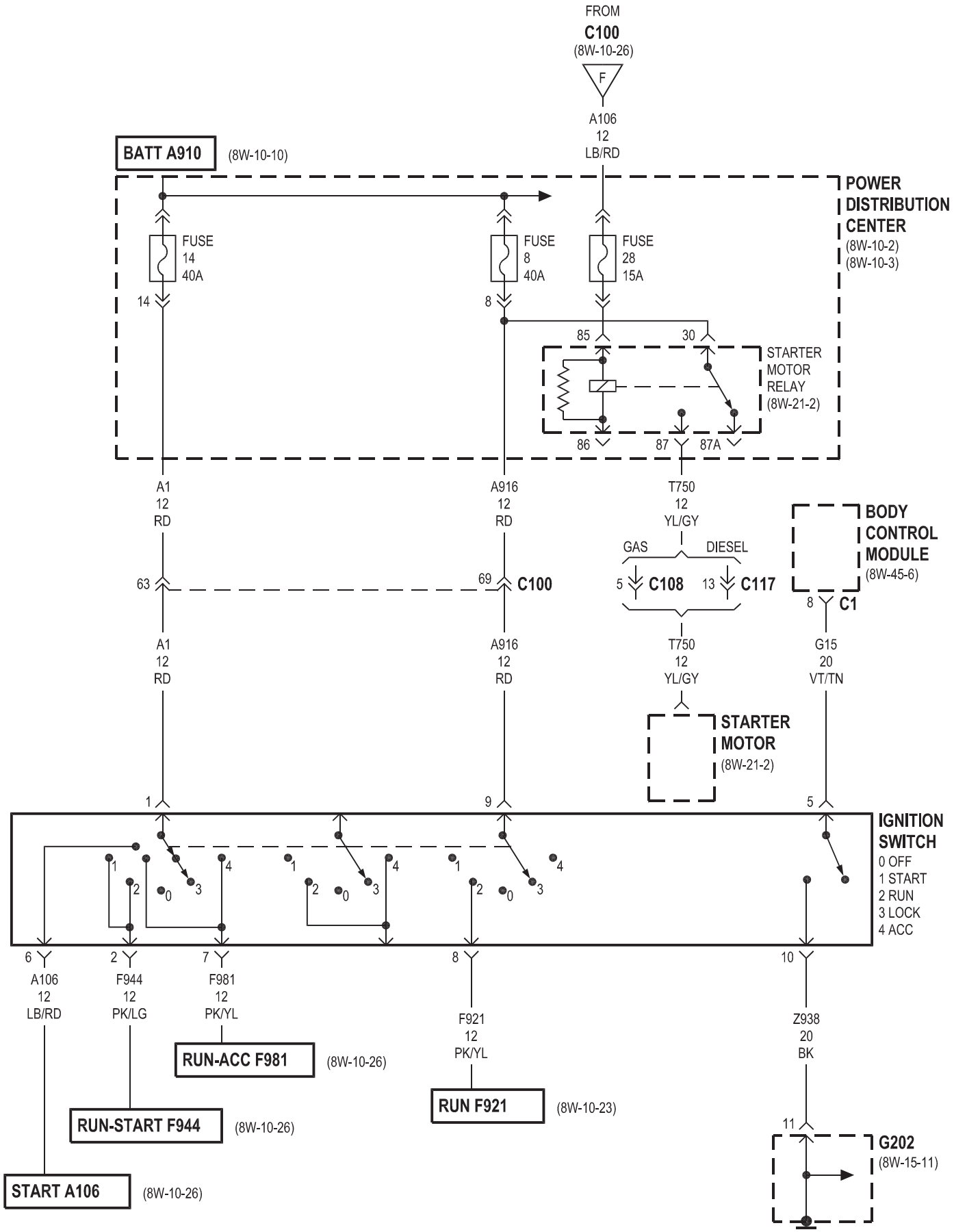
FROM
C100
(8W-10-26)
F
A106
12
LB/RD
BATT A910
(8W-10-10)
POWER DISTRIBUTION CENTER
(8W-10-2)
(8W-10-3)
FUSE
14
40A
FUSE
8
40A
FUSE
28
15A
14
8
85
30
STARTER MOTOR RELAY
(8W-21-2)
86
87
87A
A1
12
RD
A916
12
RD
T750
12
YL/GY
BODY CONTROL MODULE
(8W-45-6)
GAS
DIESEL
63
69
C100
5
C108
13
C117
8
C1
A1
12
RD
A916
12
RD
T750
12
YL/GY
G15
20
VT/TN
STARTER MOTOR
(8W-21-2)
1
9
5
IGNITION SWITCH
0 OFF
1 START
2 RUN
3 LOCK
4 ACC
6
2
7
8
10
A106
12
LB/RD
F944
12
PK/LG
F981
12
PK/YL
F921
12
PK/YL
Z938
20
BK
RUN-ACC F981
(8W-10-26)
RUN F921
(8W-10-23)
RUN-START F944
(8W-10-26)
11
G202
(8W-15-11)
START A106
(8W-10-26)

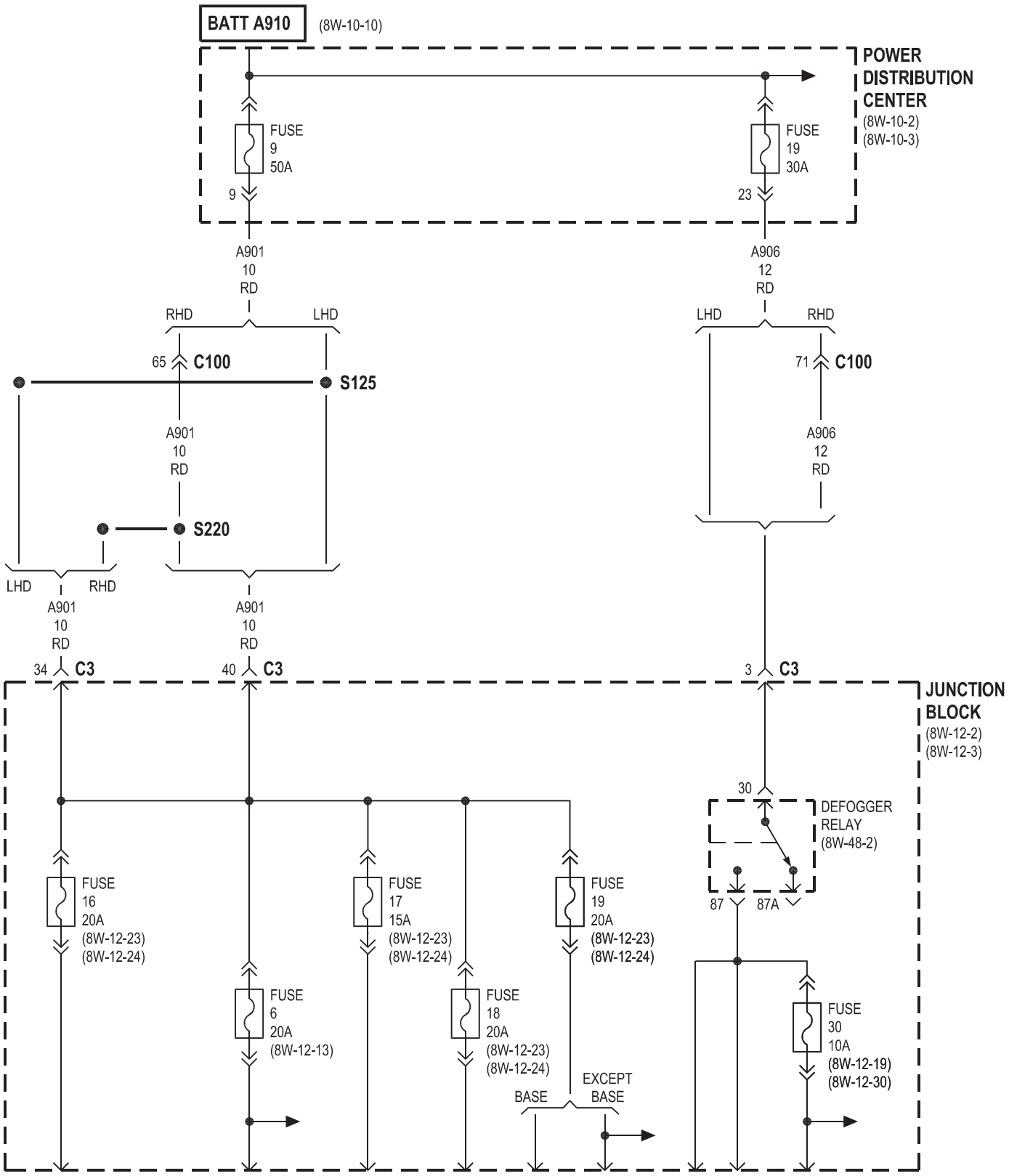
BATT A910
(8W-10-10)
POWER DISTRIBUTION CENTER
(8W-10-2)
(8W-10-3)
FUSE 9 50A
FUSE 19 30A
9
23
A901 10 RD
A906 12 RD
RHD
LHD
65
C100
S125
71
C100
A901 10 RD
A906 12 RD
S220
LHD
RHD
A901 10 RD
A901 10 RD
34
C3
40
C3
3
C3
JUNCTION BLOCK
(8W-12-2)
(8W-12-3)
30
DEFOGGER RELAY
(8W-48-2)
87
87A
FUSE 16 20A
(8W-12-23)
(8W-12-24)
FUSE 17 15A
(8W-12-23)
(8W-12-24)
FUSE 19 20A
(8W-12-23)
(8W-12-24)
FUSE 6 20A
(8W-12-13)
FUSE 18 20A
(8W-12-23)
(8W-12-24)
FUSE 30 10A
(8W-12-19)
(8W-12-30)
BASE
EXCEPT BASE

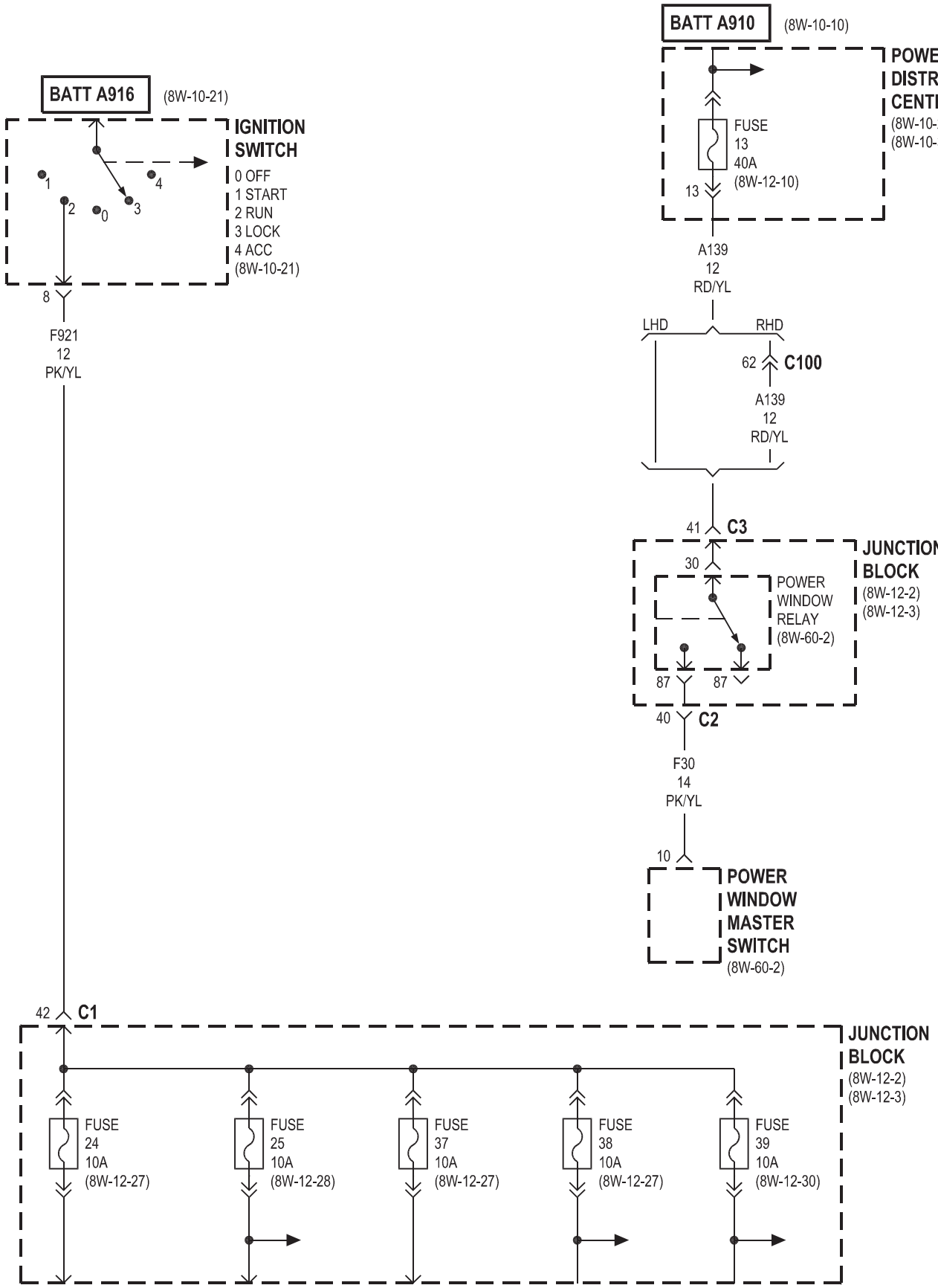
BATT A916
(8W-10-21)
IGNITION SWITCH
0 OFF
1 START
2 RUN
3 LOCK
4 ACC
(8W-10-21)
1
2
0
3
4
8
F921
12
PK/YL
BATT A910
(8W-10-10)
POWER DISTRIBUTION CENTER
(8W-10-2)
(8W-10-3)
FUSE
13
40A
(8W-12-10)
13
A139
12
RD/YL
LHD
RHD
62
C100
A139
12
RD/YL
41
C3
30
POWER WINDOW RELAY
(8W-60-2)
JUNCTION BLOCK
(8W-12-2)
(8W-12-3)
87
87
40
C2
F30
14
PK/YL
10
POWER WINDOW MASTER SWITCH
(8W-60-2)
42
C1
JUNCTION BLOCK
(8W-12-2)
(8W-12-3)
FUSE
24
10A
(8W-12-27)
FUSE
25
10A
(8W-12-28)
FUSE
37
10A
(8W-12-27)
FUSE
38
10A
(8W-12-27)
FUSE
39
10A
(8W-12-30)

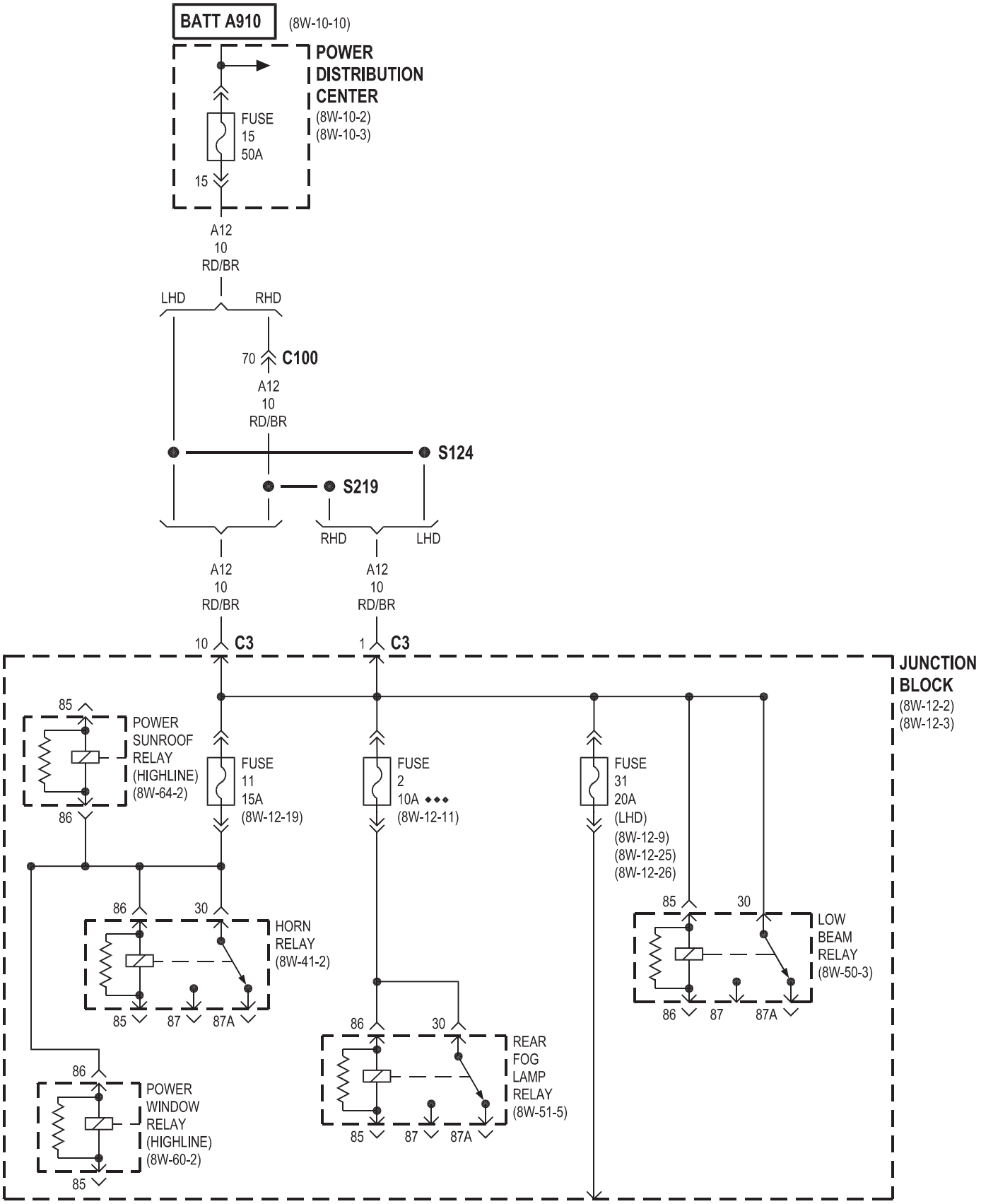
BATT A910
(8W-10-10)
POWER DISTRIBUTION CENTER
(8W-10-2)
(8W-10-3)
FUSE 15 50A
15
A12 10 RD/BR
LHD
RHD
70
C100
A12 10 RD/BR
S124
S219
RHD
LHD
A12 10 RD/BR
A12 10 RD/BR
10
C3
1
C3
JUNCTION BLOCK
(8W-12-2)
(8W-12-3)
85
POWER SUNROOF RELAY (HIGHLINE) (8W-64-2)
86
FUSE 11 15A (8W-12-19)
FUSE 2 10A ◆◆◆ (8W-12-11)
FUSE 31 20A (LHD) (8W-12-9) (8W-12-25) (8W-12-26)
86
30
HORN RELAY (8W-41-2)
85
87
87A
85
30
LOW BEAM RELAY (8W-50-3)
86
87
87A
86
30
REAR FOG LAMP RELAY (8W-51-5)
85
87
87A
86
POWER WINDOW RELAY (HIGHLINE) (8W-60-2)
85

◆◆◆ HIGHLINE

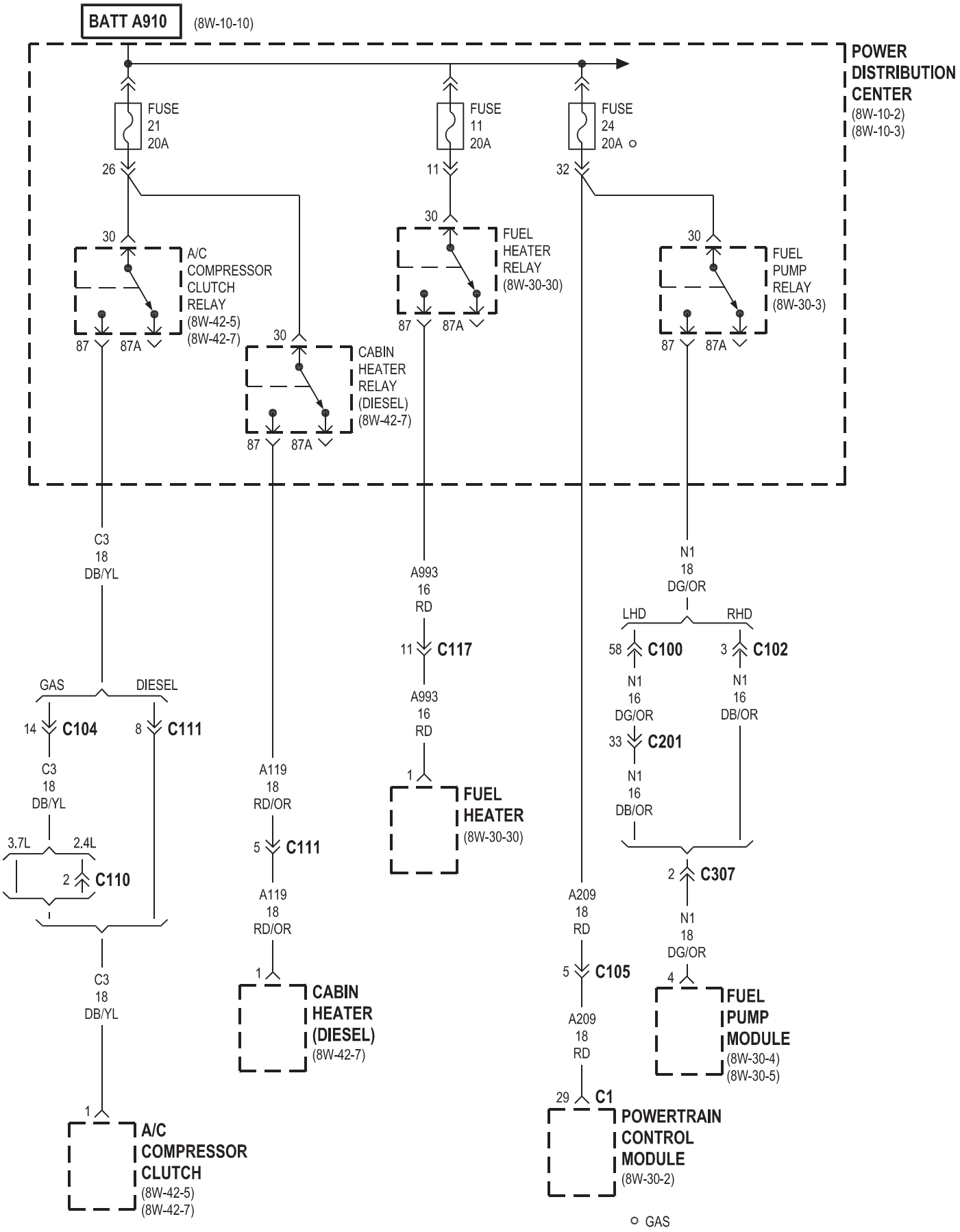
BATT A910
(8W-10-10)
POWER DISTRIBUTION CENTER
(8W-10-2)
(8W-10-3)
FUSE 21 20A
FUSE 11 20A
FUSE 24 20A
26
11
32
30
A/C COMPRESSOR CLUTCH RELAY
(8W-42-5)
(8W-42-7)
FUEL HEATER RELAY
(8W-30-30)
FUEL PUMP RELAY
(8W-30-3)
CABIN HEATER RELAY (DIESEL)
(8W-42-7)
87
87A
C3 18 DB/YL
A993 16 RD
N1 18 DG/OR
LHD
RHD
58 C100
3 C102
11 C117
N1 16 DG/OR
N1 16 DB/OR
33 C201
GAS
DIESEL
14 C104
8 C111
A119 18 RD/OR
1 FUEL HEATER
(8W-30-30)
3.7L
2.4L
2 C110
5 C111
2 C307
A209 18 RD
5 C105
4 FUEL PUMP MODULE
(8W-30-4)
(8W-30-5)
1 CABIN HEATER (DIESEL)
(8W-42-7)
29 C1
POWERTRAIN CONTROL MODULE
(8W-30-2)
A/C COMPRESSOR CLUTCH
(8W-42-5)
(8W-42-7)
GAS

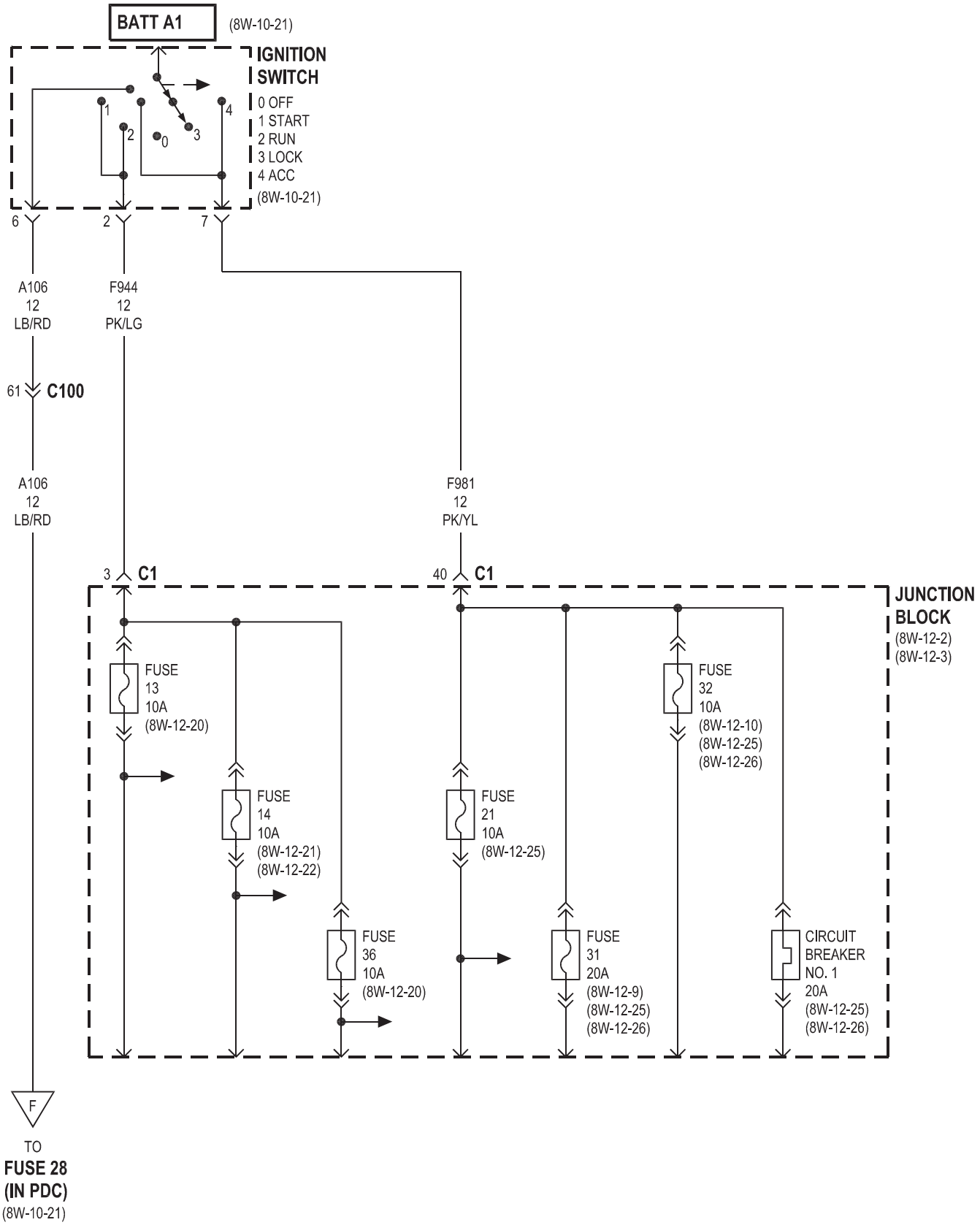
BATT A1
(8W-10-21)
IGNITION SWITCH
0 OFF
1 START
2 RUN
3 LOCK
4 ACC
(8W-10-21)
1
2
0
3
4
6
2
7
A106
12
LB/RD
F944
12
PK/LG
61
C100
A106
12
LB/RD
F981
12
PK/YL
3
C1
40
C1
JUNCTION BLOCK
(8W-12-2)
(8W-12-3)
FUSE
13
10A
(8W-12-20)
FUSE
14
10A
(8W-12-21)
(8W-12-22)
FUSE
36
10A
(8W-12-20)
FUSE
21
10A
(8W-12-25)
FUSE
31
20A
(8W-12-9)
(8W-12-25)
(8W-12-26)
FUSE
32
10A
(8W-12-10)
(8W-12-25)
(8W-12-26)
CIRCUIT BREAKER NO. 1
20A
(8W-12-25)
(8W-12-26)
F
TO
FUSE 28
(IN PDC)
(8W-10-21)

8W-12 JUNCTION BLOCK

Component	Page
A/C Compressor Clutch Relay	8W-12-21
A/C-Heater Control	8W-12-28, 30, 36
Airbag Control Module	8W-12-20, 27
Antenna Module	8W-12-10
Anti-Lock Brake Module	8W-12-27
Automatic Day/Night Mirror	8W-12-20
Back-Up Lamp Switch	8W-12-30
Blend Door Actuator	8W-12-28
Blower Motor Relay	8W-12-27
Body Control Module	8W-12-9, 11, 13, 15, 16, 17, 20, 23, 24, 25, 26, 29, 30, 32, 33, 34, 35
Brake Lamp Switch	8W-12-18
Cargo Lamp	8W-12-32, 35
Center High Mounted Stop Lamp	8W-12-18
Cigar Lighter	8W-12-9, 25, 26
Circuit Breaker No. 1	8W-12-25
Circuit Breaker No. 1 (JB)	8W-12-26
Circuit Breaker No. 3	8W-12-31
Clockspring	8W-12-9
Compass Mini-Trip Computer	8W-12-20, 32
Data Link Connector	8W-12-31
Daytime Running Lamp Relay	8W-12-29
Defogger Relay	8W-12-30
Dome Lamp	8W-12-32, 35
Door Lock Relay	8W-12-13
Driver Door Lock Motor/Ajar Switch	8W-12-13, 14
Driver Door Unlock Relay	8W-12-13
Driver Power Mirror	8W-12-30
Engine Control Module	8W-12-18, 22
Front Fog Lamp Relay	8W-12-23, 24
Front Wiper Motor	8W-12-25, 26
Fuel Heater Relay	8W-12-27
Fuel Pump Relay	8W-12-21
Fuse 1	8W-12-9
Fuse 2	8W-12-11
Fuse 4	8W-12-11
Fuse 5	8W-12-11
Fuse 6	8W-12-13
Fuse 7	8W-12-15, 16, 17
Fuse 9	8W-12-15, 16, 17, 23, 24
Fuse 11	8W-12-19
Fuse 12	8W-12-18
Fuse 13	8W-12-10, 20
Fuse 14	8W-12-21, 22
Fuse 16	8W-12-23, 24
Fuse 17	8W-12-23, 24
Fuse 18	8W-12-23, 24
Fuse 19	8W-12-23, 24
Fuse 21	8W-12-25
Fuse 22	8W-12-26
Fuse 24	8W-12-27
Fuse 25	8W-12-28
Fuse 26	8W-12-29
Fuse 27	8W-12-29
Fuse 30	8W-12-19, 30
Fuse 31	8W-12-9, 25, 26
Fuse 32	8W-12-10, 25, 26
Fuse 33	8W-12-31
Fuse 34	8W-12-32
Fuse 36	8W-12-20
Fuse 37	8W-12-27
Fuse 38	8W-12-27
Fuse 39	8W-12-30
G202	8W-12-13, 15, 16, 17, 34
Hands Free Module	8W-12-32
Hazard Switch/Combination Flasher	8W-12-19, 30, 36
Headlamp Leveling Switch	8W-12-16, 17
Heated Seat Module	8W-12-19
High Beam Relay	8W-12-29
High Note Horn	8W-12-9
High Speed Radiator Fan Relay	8W-12-21
Horn Relay	8W-12-9
Horn Switch	8W-12-9
Instrument Cluster	8W-12-15, 16, 17, 20, 32, 36
Intrusion Transceiver Module	8W-12-32
Junction Block	8W-12-2, 3, 9, 10, 11, 12, 13, 14, 15, 16, 17, 18, 19, 20, 21, 22, 23, 24, 25, 26, 27, 28, 29, 30, 31, 32, 33, 34, 35, 36
Left Courtesy Lamp	8W-12-32, 35
Left Door Lock Switch	8W-12-25, 26, 33, 34
Left Fog Lamp	8W-12-23, 24
Left Front Park/Turn Signal Lamp	8W-12-15
Left Headlamp	8W-12-12, 29
Left Heated Seat Switch	8W-12-28
Left Leveling Motor	8W-12-16, 17
Left Power Seat Switch	8W-12-31
Left Rear Door Lock Motor/Ajar Switch	8W-12-14
Left Side Marker Lamp	8W-12-15
Left Tail/Stop Lamp	8W-12-12, 15, 16, 17, 18
Left Visor/Vanity Lamp	8W-12-32, 33
License Lamp	8W-12-15, 16, 17
Liftgate Glass	8W-12-30
Lightbar Switch	8W-12-12, 16, 17, 20, 36
Low Beam Relay	8W-12-11
Low Speed Radiator Fan Relay	8W-12-21
Mass Air Flow Sensor	8W-12-22
Multi-Function Switch	8W-12-25, 26, 29
Occupant Classification Module	8W-12-20
Overhead Map/Reading Lamp	8W-12-32, 33, 35
Park Lamp Relay	8W-12-15, 16, 17
Passenger Airbag On/Off Indicator	8W-12-20
Passenger Door Lock Motor/Ajar Switch	8W-12-14
Passenger Door Unlock Relay	8W-12-13
Passenger Power Mirror	8W-12-30
Power Distribution Center	8W-12-10, 21, 23, 24, 25, 26, 27, 33
Power Mirror Switch	8W-12-28
Power Sunroof Relay	8W-12-10
Power Window Master Switch	8W-12-10
Power Window Relay	8W-12-10
Powertrain Control Module	8W-12-21
Radio	8W-12-25, 26, 32, 36
Radio Choke	8W-12-23, 24
Rear Fog Lamp Relay	8W-12-11
Rear Power Outlet	8W-12-23, 24
Rear Wiper Motor	8W-12-23, 24
Right Courtesy Lamp	8W-12-32, 35
Right Door Lock Switch	8W-12-25, 26, 33, 34
Right Fog Lamp	8W-12-23, 24
Right Front Park/Turn Signal Lamp	8W-12-15
Right Headlamp	8W-12-12, 29
Right Heated Seat Switch	8W-12-28
Right Leveling Motor	8W-12-16, 17
Right Power Seat Switch	8W-12-31
Right Rear Door Lock Motor/Ajar Switch	8W-12-14
Right Side Marker Lamp	8W-12-15
Right Tail/Stop Lamp	8W-12-12, 15, 16, 17, 18
Right Visor/Vanity Lamp	8W-12-32, 33
Sentry Key Remote Entry Module	8W-12-20, 31
Shifter Assembly	8W-12-27, 36
Siren	8W-12-32
Sunroof Motor	8W-12-10
Tailgate Lock Motor/Ajar Switch	8W-12-34
Trailer Tow Brake Lamp Relay	8W-12-18, 23
Trailer Tow Connector	8W-12-15, 16
Trailer Tow Relay	8W-12-28
Transmission Control Module	8W-12-22
Transmission Range Sensor	8W-12-30
Transmission Solenoid/TRS Assembly	8W-12-30
Transponder-Tire Pressure-Left Front	8W-12-27
Transponder-Tire Pressure-Right Front	8W-12-27
Transponder-Tire Pressure-Right Rear	8W-12-27
Wiper High/Low Relay	8W-12-25, 26
Wiper On/Off Relay	8W-12-25, 26, 33

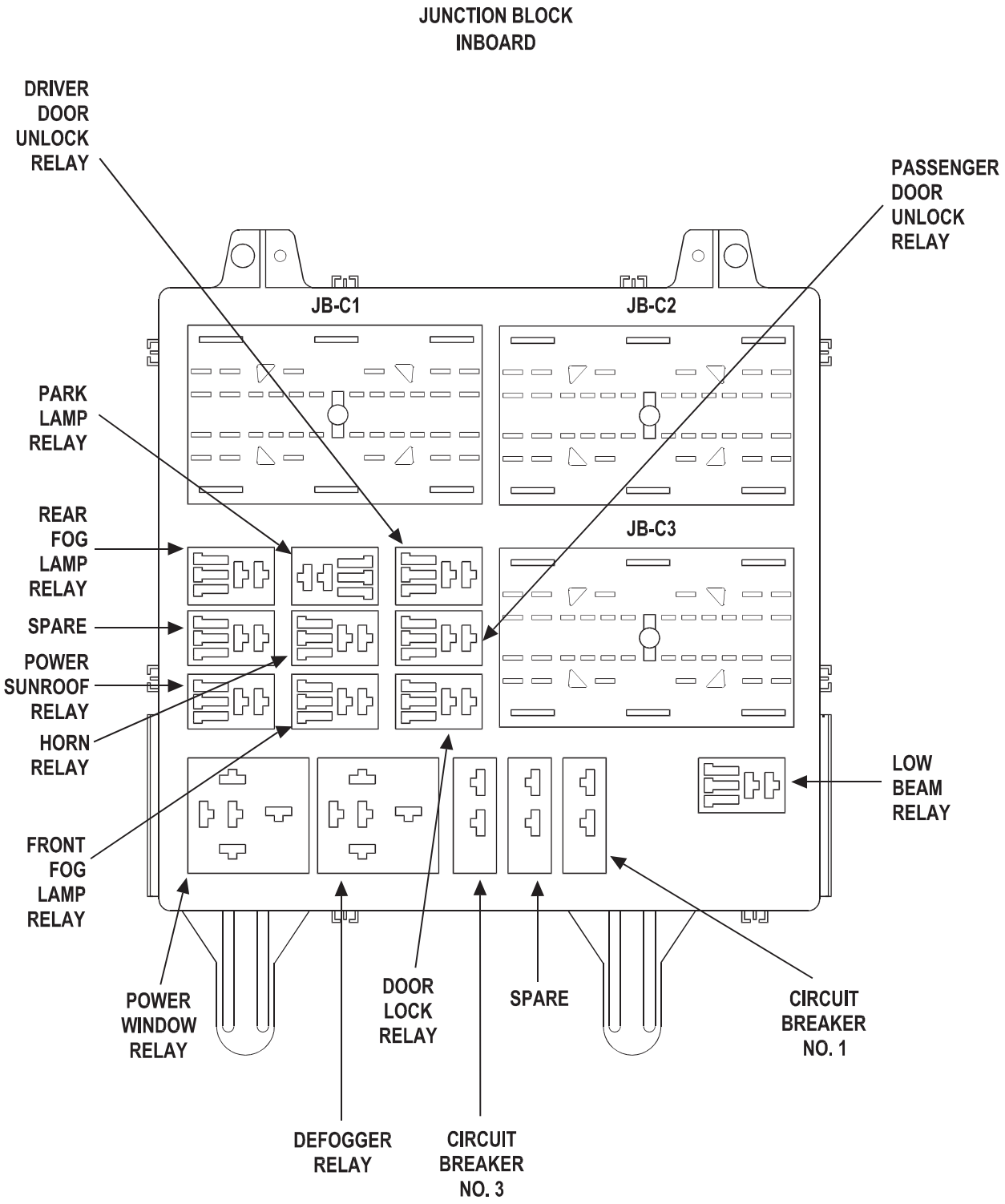
JUNCTION BLOCK
INBOARD
DRIVER DOOR UNLOCK RELAY
PASSENGER DOOR UNLOCK RELAY
JB-C1
JB-C2
JB-C3
PARK LAMP RELAY
REAR FOG LAMP RELAY
SPARE
POWER SUNROOF RELAY
HORN RELAY
FRONT FOG LAMP RELAY
LOW BEAM RELAY
POWER WINDOW RELAY
DOOR LOCK RELAY
SPARE
CIRCUIT BREAKER NO. 1
DEFOGGER RELAY
CIRCUIT BREAKER NO. 3

JUNCTION BLOCK
OUTBOARD

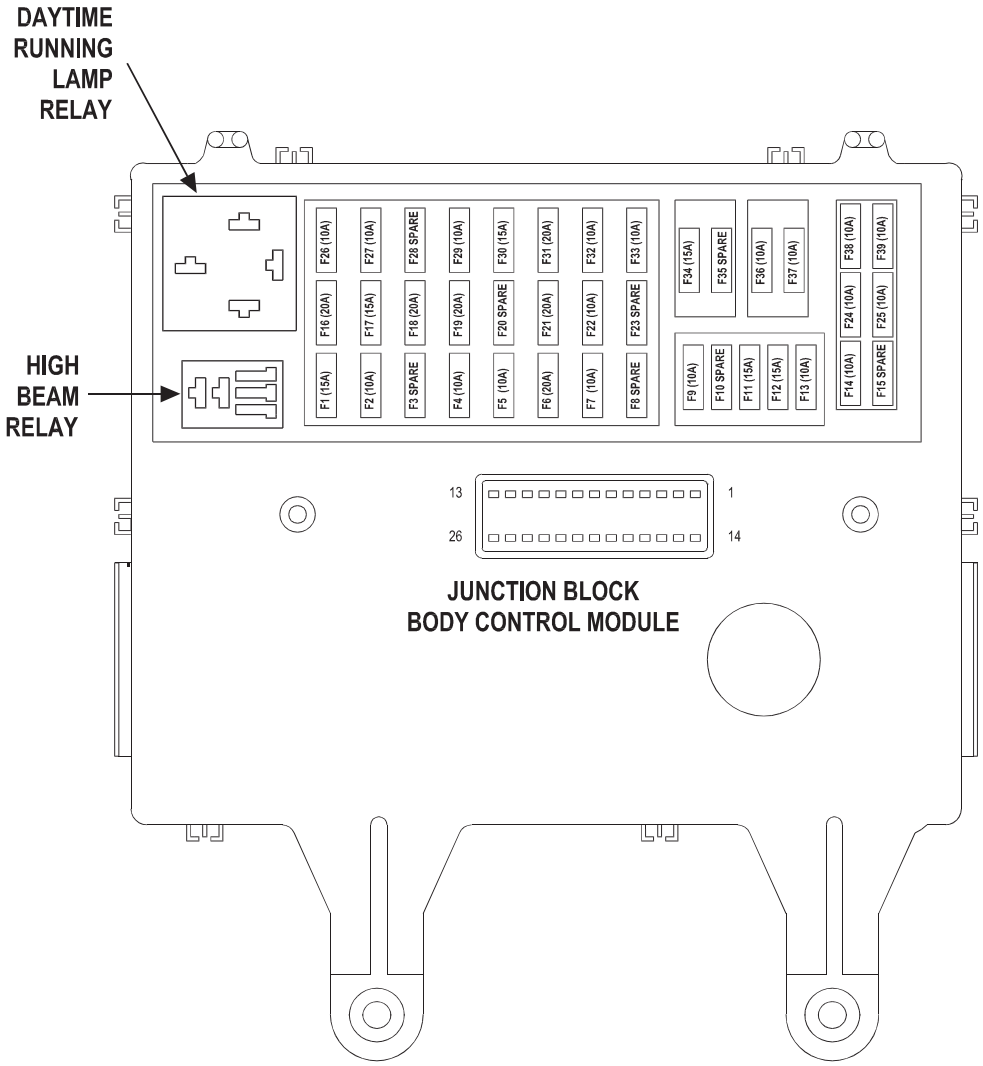

FUSES

FUSE NO.	AMPS	FUSED CIRCUIT	FUNCTION
1	15A	INTERNAL	FUSED B(+)
2	10A	INTERNAL ◪	FUSED B(+)
3	-	-	-
4	10A	L44 18WT/TN	FUSED RIGHT LOW BEAM OUTPUT
5	10A	L43 18WT/DB	FUSED LEFT LOW BEAM OUTPUT
6	20A	INTERNAL	FUSED B(+)
7	10A	INTERNAL	FUSED PARK LAMP RELAY OUTPUT
8	-	-	-
9	10A	INTERNAL	FUSED PARK LAMP RELAY OUTPUT
10	-	-	-
11	15A	A107 18BR/RD	FUSED B(+)
12	15A	A103 18GY/RD	FUSED B(+)
13	10A	INTERNAL	FUSED IGNITION SWITCH OUTPUT (RUN-START)
14	10A	INTERNAL	FUSED IGNITION SWITCH OUTPUT (RUN-START)
15	-	-	-
16	20A	A305 16RD/LB	FUSED B(+)
17	15A	A44 18RD/OR	FUSED B(+)
18	20A	X1 16DG/BR	FUSED B(+)
19	20A	A913 16RD ▽	FUSED B(+)
19	20A	INTERNAL ▽▽	FUSED B(+)
20	-	-	-
21	20A	A130 16VT/RD	FUSED B(+)
22	10A	INTERNAL	FUSED IGNITION SWITCH OUTPUT (RUN-ACC)
23	-	-	-
24	10A	F20 20PK/GY	FUSED IGNITION SWITCH OUTPUT (RUN)
25	10A	INTERNAL	FUSED IGNITION SWITCH OUTPUT (RUN)
26	10A	L34 18WT/GY	FUSED RIGHT HIGH BEAM OUTPUT
27	10A	L33 18WT/LG	FUSED LEFT HIGH BEAM OUTPUT
28	-	-	-
29	10A	INTERNAL	FUSED REAR WINDOW DEFOGGER RELAY OUTPUT
30	15A	A3 16RD/WT	FUSED B(+)

▽ BASE
▽▽ EXCEPT BASE ◪ LHD HIGHLINE/RHD

FUSES (CONTINUED)

FUSE NO.	AMPS	FUSED CIRCUIT	FUNCTION
31	20A ●●	F307 16LB/PK	FUSED IGNITION SWITCH OUTPUT (RUN-ACC)
31	20A ●	A207 16RD/LG	FUSED B(+)
32	10A	F943 20PK/LG	FUSED IGNITION SWITCH OUTPUT (RUN-ACC)
33	10A	INTERNAL	FUSED B(+)
34	15A	INTERNAL	FUSED B(+)
35	-	-	-
36	10A	INTERNAL	FUSED IGNITION SWITCH OUTPUT (RUN-START)
37	10A	F100 20PK/VT	FUSED IGNITION SWITCH OUTPUT (RUN)
38	10A	INTERNAL	FUSED IGNITION SWITCH OUTPUT (RUN)
39	10A	INTERNAL	FUSED IGNITION SWITCH OUTPUT (RUN)

CIRCUIT BREAKERS

C.B.	AMPS	FUSED CIRCUIT	FUNCTION
1	25A ◆◆◆◆	F37 14RD/LB	FUSED B(+)
2	-	SPARE	-
3	20A ●	V6 16DB/YL	WINDSHIELD WIPER SYSTEM FEED
	20A ●●	V6 14DB/YL	WINDSHIELD WIPER SYSTEM FEED

◆◆◆◆ MIDLINE/HIGHLINE
● LHD
●● RHD

DEFOGGER RELAY

CAVITY	CIRCUIT	FUNCTION
30	INTERNAL	FUSED B(+)
85	INTERNAL	REAR WINDOW DEFOGGER RELAY CONTROL
86	INTERNAL	FUSED IGNITION SWITCH OUTPUT (RUN)
87	INTERNAL	REAR WINDOW DEFOGGER RELAY OUTPUT
87A	-	-

DOOR LOCK RELAY

CAVITY	CIRCUIT	FUNCTION
30	INTERNAL	LOCK RELAY OUTPUT
85	INTERNAL	FUSED B(+)
86	INTERNAL	DOOR LOCK RELAY CONTROL
87	INTERNAL	FUSED B(+)
87A	INTERNAL	GROUND

DRIVER DOOR UNLOCK RELAY

CAVITY	CIRCUIT	FUNCTION
30	INTERNAL	DRIVER DOOR UNLOCK RELAY OUTPUT
85	INTERNAL	DRIVER DOOR UNLOCK RELAY CONTROL
86	INTERNAL	FUSED B(+)
87	INTERNAL	FUSED B(+)
87A	INTERNAL	GROUND

FRONT FOG LAMP RELAY

CAVITY	CIRCUIT	FUNCTION
30	INTERNAL	FUSED B(+)
85	INTERNAL	FRONT FOG LAMP RELAY CONTROL
86	INTERNAL	FUSED B(+)
87	INTERNAL	FRONT FOG LAMP RELAY OUTPUT
87A	-	-

HIGH BEAM RELAY

CAVITY	CIRCUIT	FUNCTION
30	INTERNAL	FUSED B(+)
85	INTERNAL	FUSED B(+)
86	INTERNAL	HIGH BEAM RELAY CONTROL
87	INTERNAL	FRONT FOG LAMP RELAY OUTPUT
87A	-	-

HORN RELAY

CAVITY	CIRCUIT	FUNCTION
30	INTERNAL	FUSED B(+)
85	INTERNAL	HORN RELAY CONTROL
86	INTERNAL	FUSED B(+)
87	INTERNAL	HORN RELAY OUTPUT
87A	-	-

LOW BEAM RELAY

CAVITY	CIRCUIT	FUNCTION
30	INTERNAL	FUSED B(+)
85	INTERNAL	FUSED B(+)
86	INTERNAL	LOW BEAM RELAY CONTROL
87	INTERNAL	LOW BEAM RELAY OUTPUT
87A	-	-

PARK LAMP RELAY

CAVITY	CIRCUIT	FUNCTION
30	INTERNAL	PARK LAMP RELAY OUTPUT
85	INTERNAL	PARK LAMP RELAY CONTROL
86	INTERNAL	FUSED B(+)
87	INTERNAL	FUSED B(+)
87A	INTERNAL	GROUND

PASSENGER DOOR UNLOCK RELAY

CAVITY	CIRCUIT	FUNCTION
30	INTERNAL	UNLOCK RELAY OUTPUT
85	INTERNAL	DOOR UNLOCK RELAY CONTROL
86	INTERNAL	FUSED B(+)
87	INTERNAL	FUSED B(+)
87A	INTERNAL	GROUND

POWER WINDOW RELAY

CAVITY	CIRCUIT	FUNCTION
30	INTERNAL	FUSED B(+)
85	INTERNAL	ACCESSORY DELAY RELAY CONTROL
86	INTERNAL	FUSED B(+)
87	INTERNAL	IGNITION SWITCH OUTPUT (RUN-ACC)
87A	-	-

POWER SUNROOF RELAY

CAVITY	CIRCUIT	FUNCTION
30	INTERNAL	FUSED B(+)
85	INTERNAL	ACCESSORY DELAY RELAY CONTROL
86	INTERNAL	FUSED B(+)
87	INTERNAL	FUSED IGNITION SWITCH OUTPUT (RUN-ACC)
87A	-	-

REAR FOG LAMP RELAY

CAVITY	CIRCUIT	FUNCTION
30	INTERNAL	FUSED B(+)
85	INTERNAL	REAR FOG LAMP RELAY CONTROL
86	INTERNAL	FUSED B(+)
87	INTERNAL	REAR FOG LAMP RELAY OUTPUT
87A	-	-

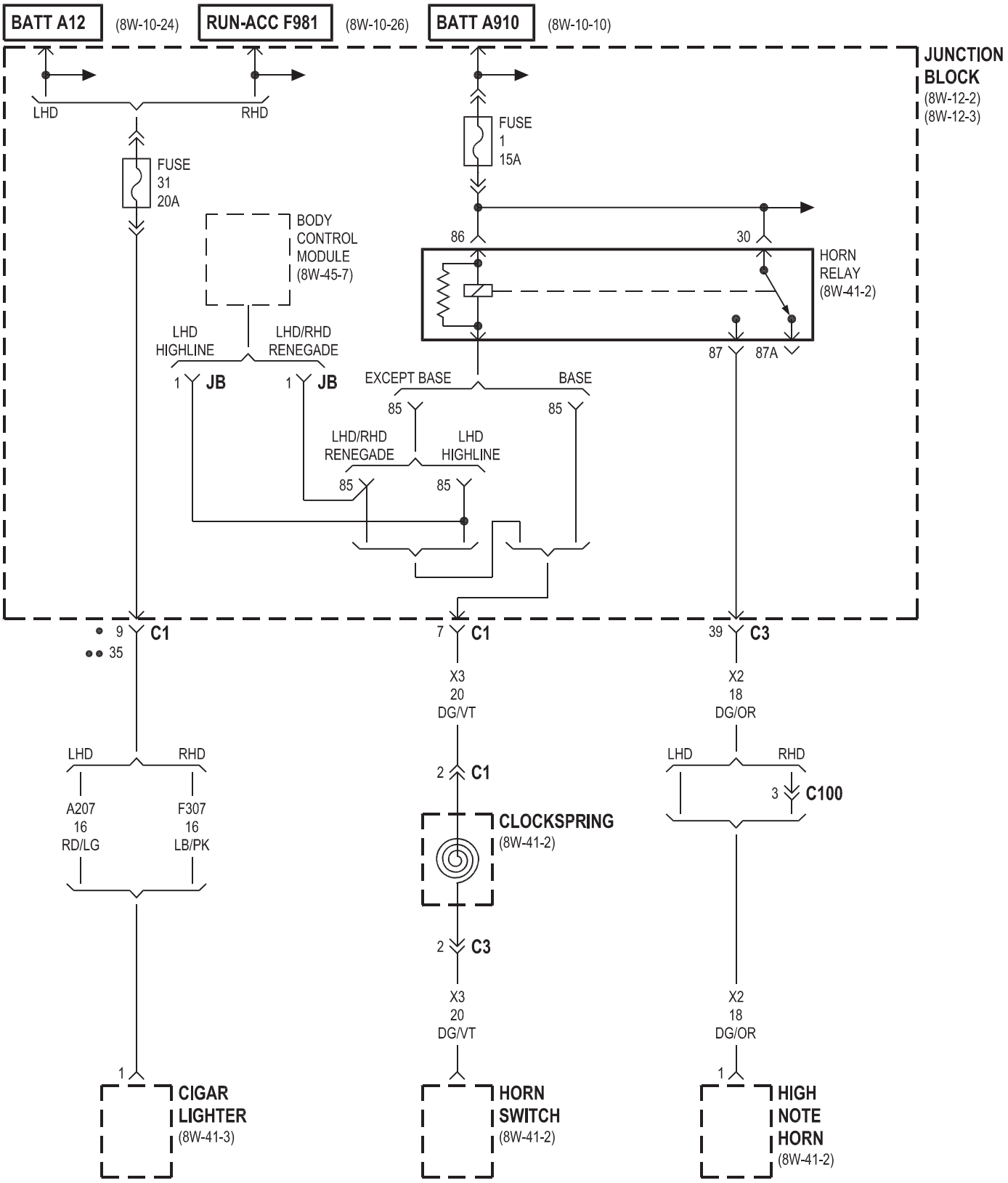
BATT A12
(8W-10-24)
RUN-ACC F981
(8W-10-26)
BATT A910
(8W-10-10)
JUNCTION BLOCK
(8W-12-2)
(8W-12-3)
LHD
RHD
FUSE 31 20A
FUSE 1 15A
BODY CONTROL MODULE (8W-45-7)
86
30
HORN RELAY (8W-41-2)
87
87A
LHD HIGHLINE
LHD/RHD RENEGADE
1 JB
1 JB
EXCEPT BASE
BASE
85
85
LHD/RHD RENEGADE
LHD HIGHLINE
85
85
9 C1
35
7 C1
39 C3
X3 20 DG/VT
X2 18 DG/OR
LHD
RHD
A207 16 RD/LG
F307 16 LB/PK
2 C1
CLOCKSPRING (8W-41-2)
2 C3
3 C100
X3 20 DG/VT
X2 18 DG/OR
1
CIGAR LIGHTER (8W-41-3)
HORN SWITCH (8W-41-2)
HIGH NOTE HORN (8W-41-2)
RHD
LHD

MIDLINE/HIGHLINE

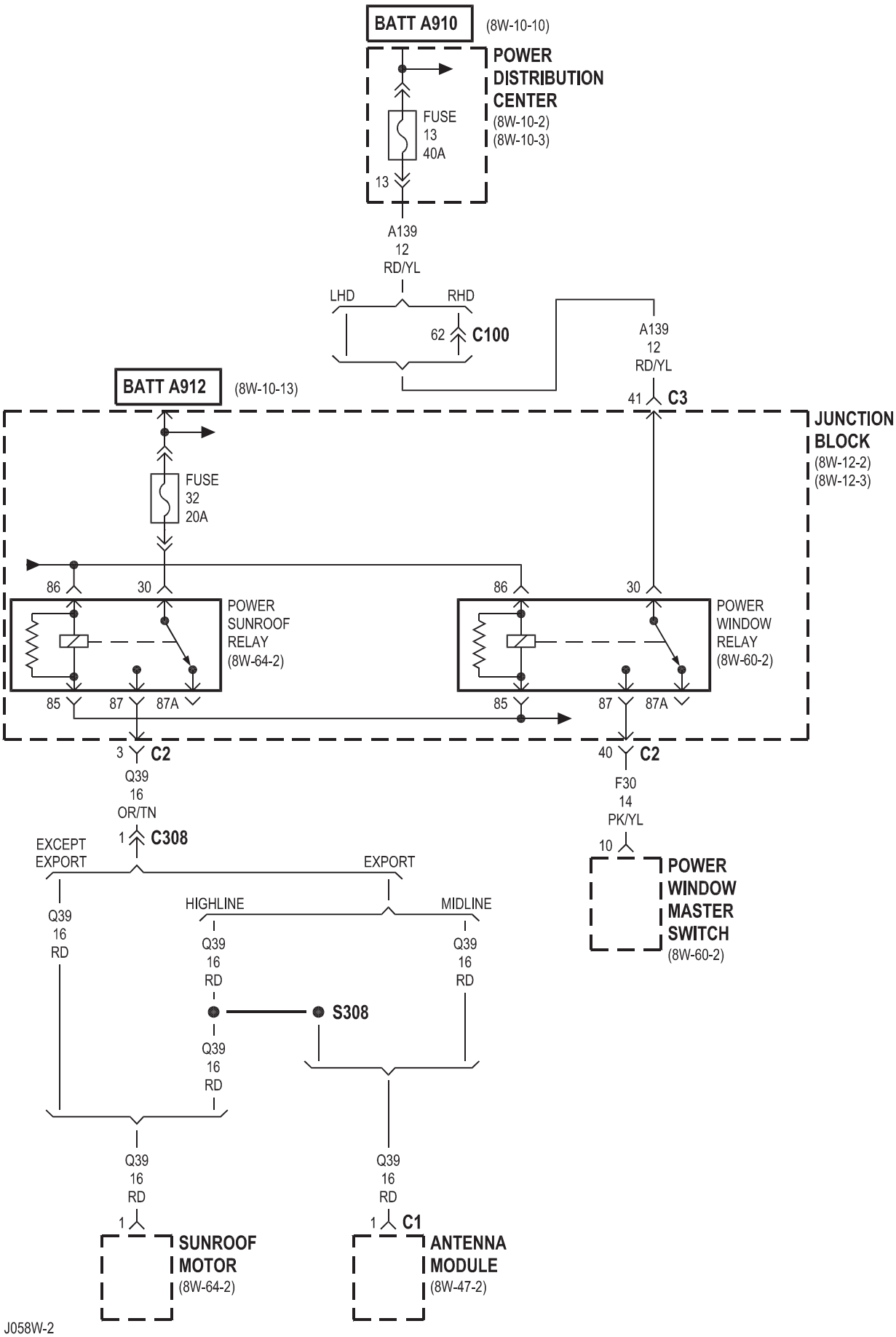

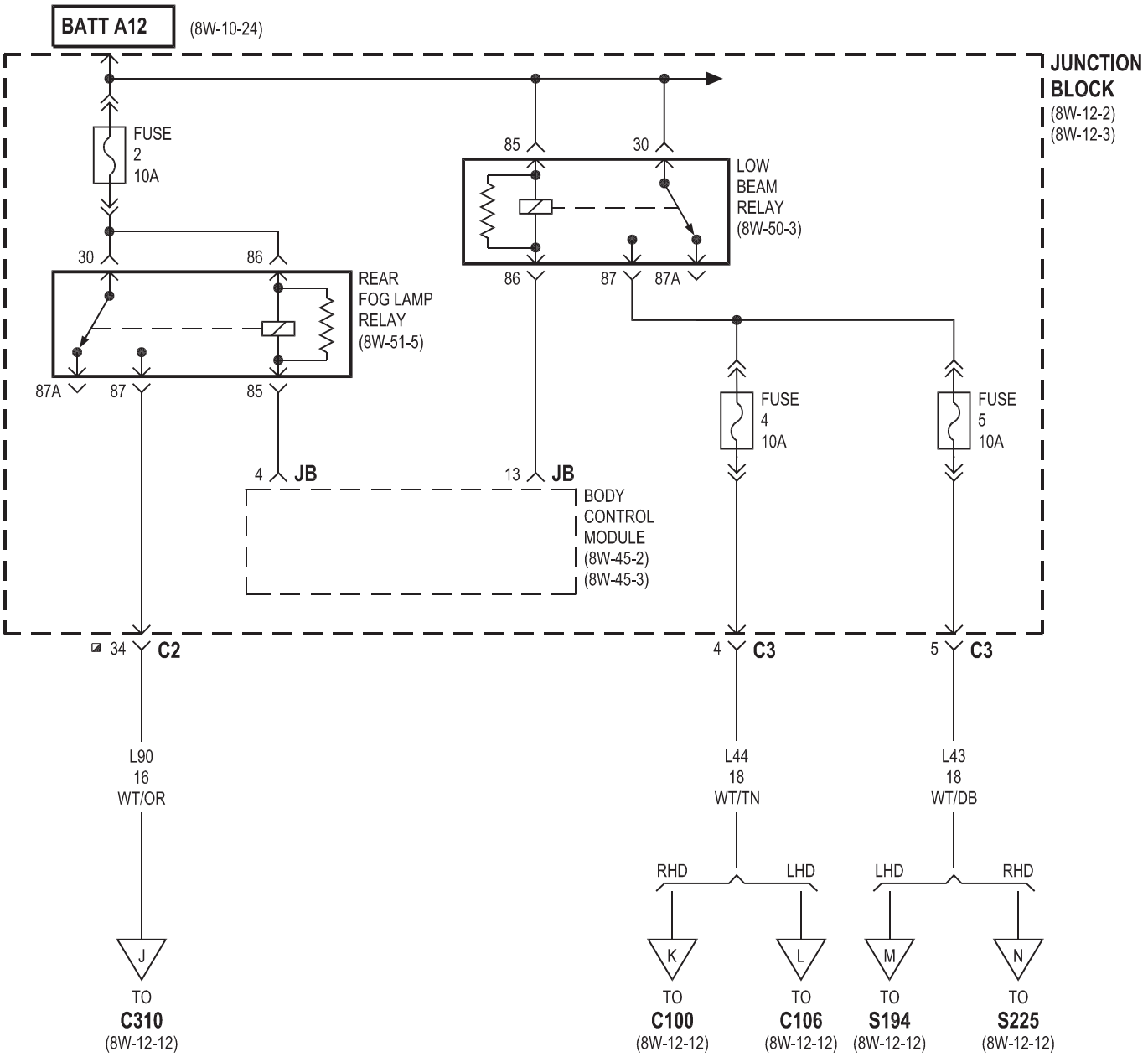

◪ LHD HIGHLINE/RHD

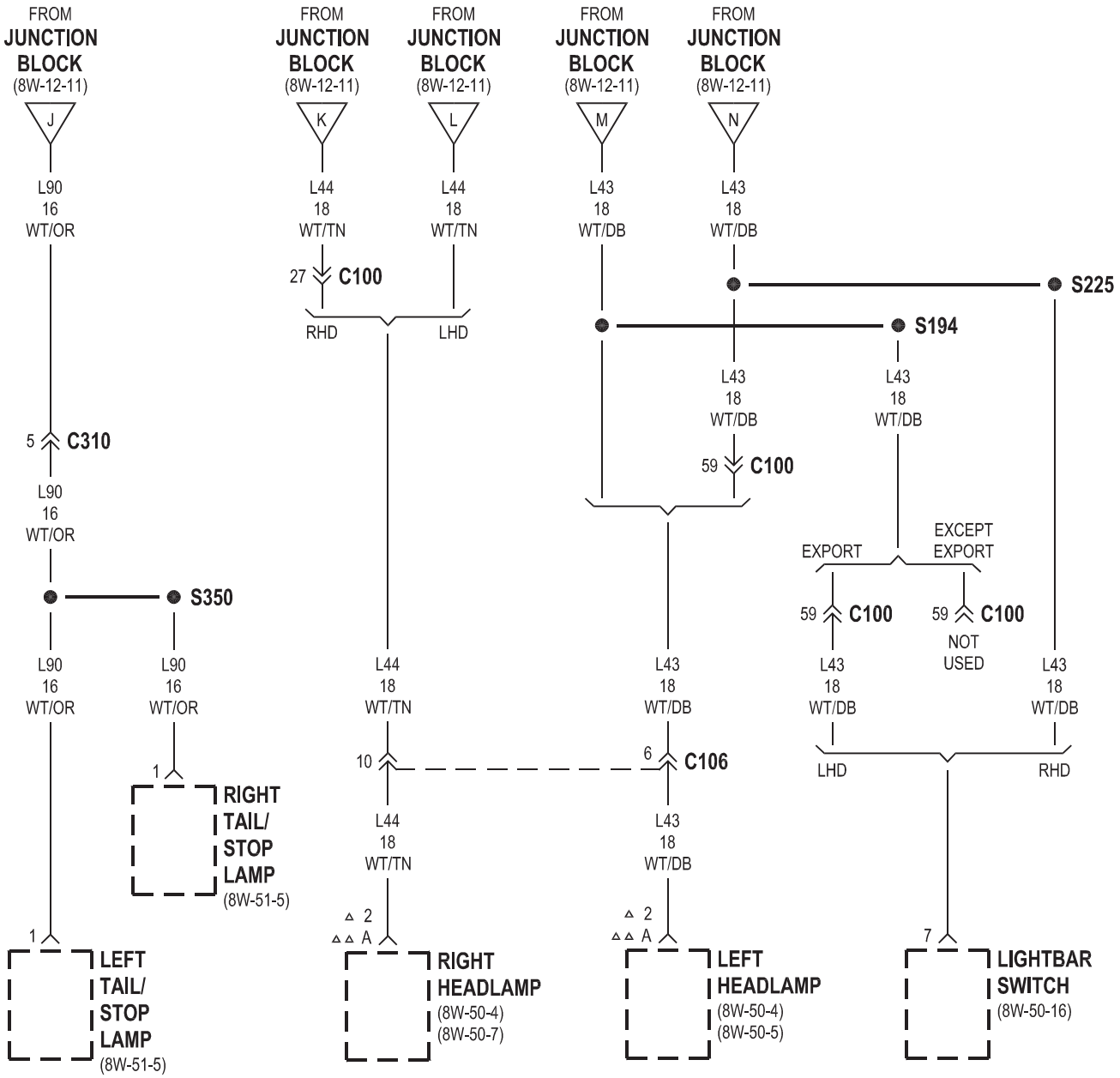

△ EXPORT
△△ EXCEPT EXPORT

EXCEPT BASE

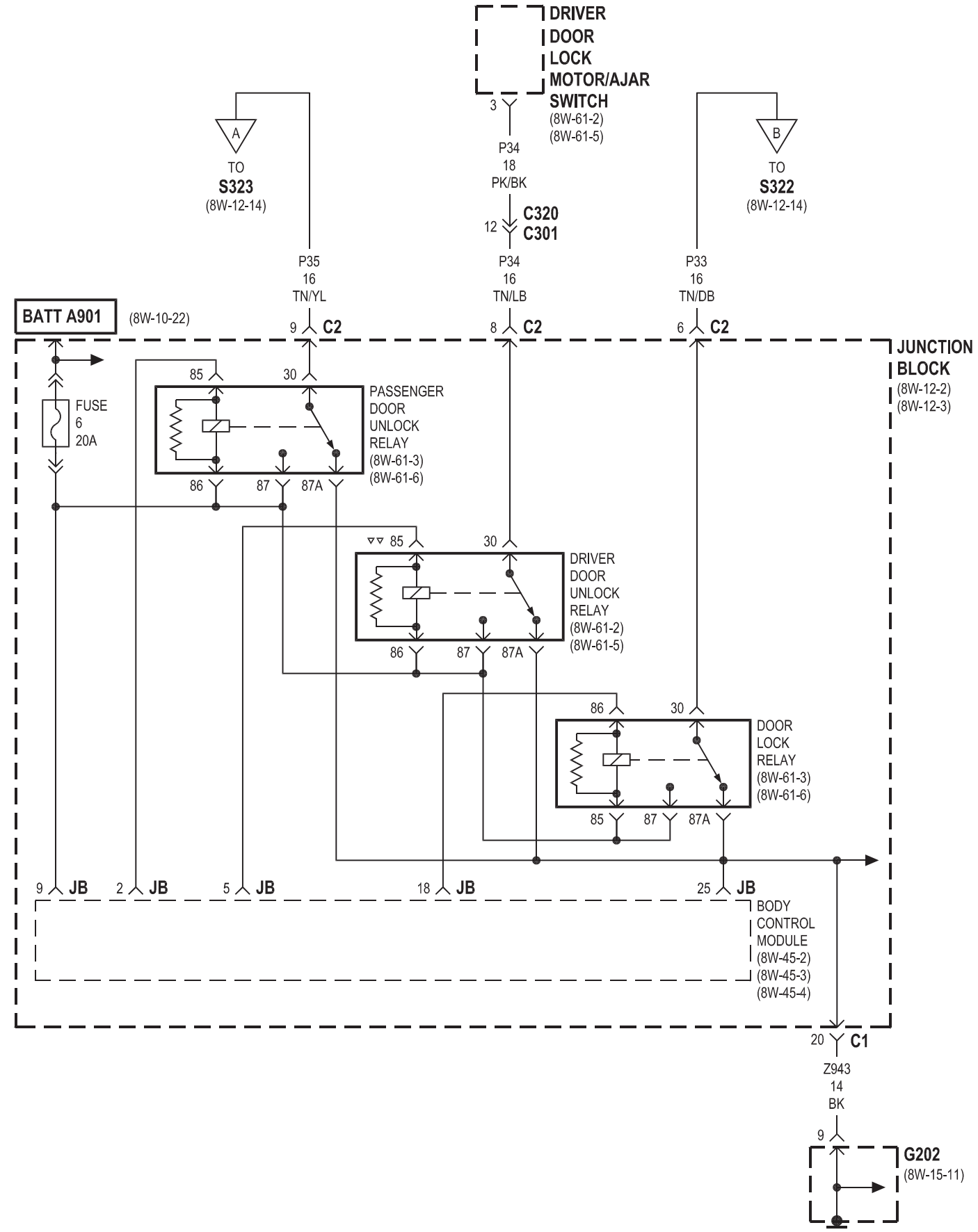

▿▿ EXCEPT BASE

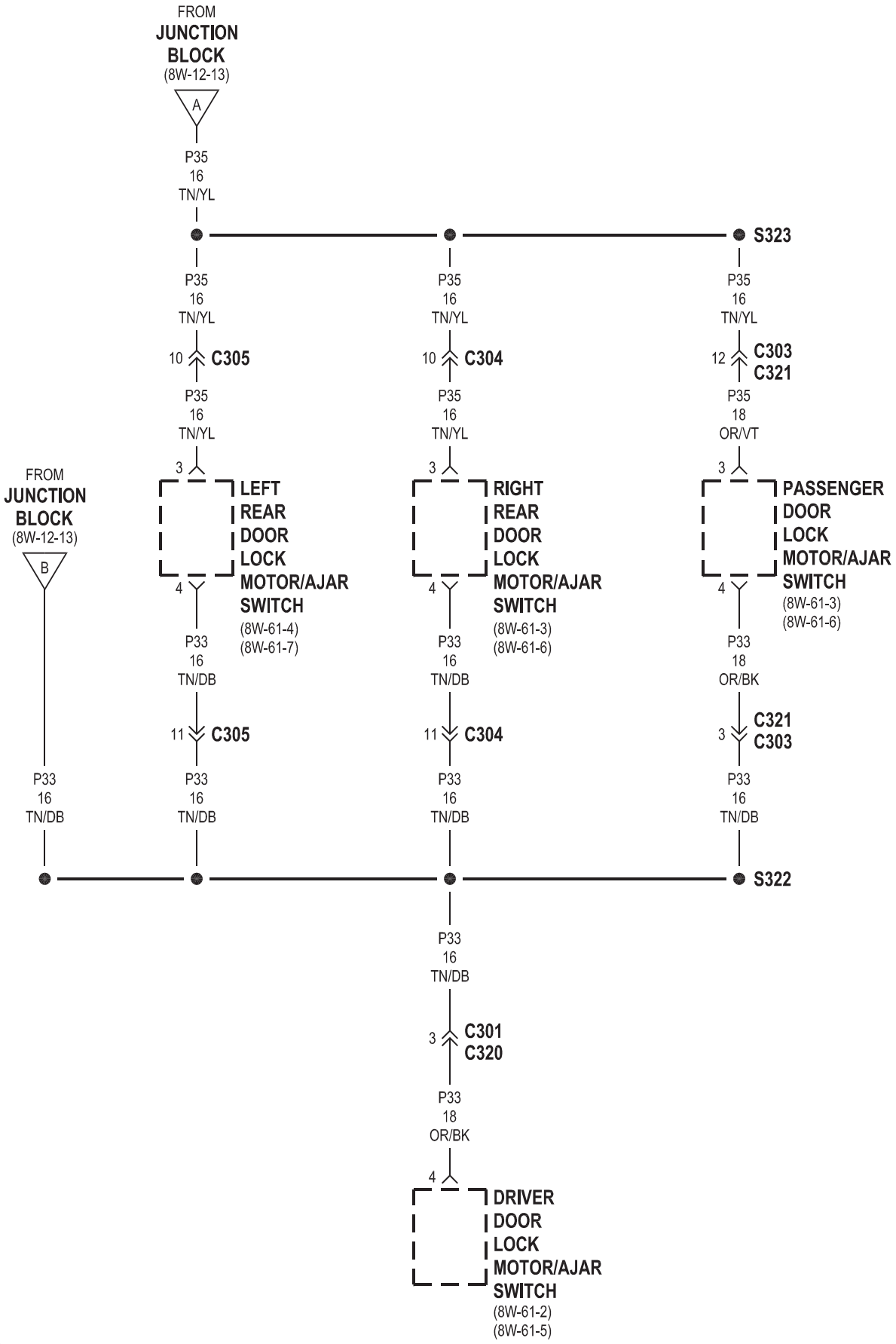
FROM
JUNCTION
BLOCK
(8W-12-13)
A
P35
16
TN/YL
S323
P35
16
TN/YL
10
C305
P35
16
TN/YL
3
LEFT
REAR
DOOR
LOCK
MOTOR/AJAR
SWITCH
(8W-61-4)
(8W-61-7)
4
P33
16
TN/DB
11
C305
P33
16
TN/DB
P35
16
TN/YL
10
C304
P35
16
TN/YL
3
RIGHT
REAR
DOOR
LOCK
MOTOR/AJAR
SWITCH
(8W-61-3)
(8W-61-6)
4
P33
16
TN/DB
11
C304
P33
16
TN/DB
P35
16
TN/YL
12
C303
C321
P35
18
OR/VT
3
PASSENGER
DOOR
LOCK
MOTOR/AJAR
SWITCH
(8W-61-3)
(8W-61-6)
4
P33
18
OR/BK
3
C321
C303
P33
16
TN/DB
FROM
JUNCTION
BLOCK
(8W-12-13)
B
P33
16
TN/DB
S322
P33
16
TN/DB
3
C301
C320
P33
18
OR/BK
4
DRIVER
DOOR
LOCK
MOTOR/AJAR
SWITCH
(8W-61-2)
(8W-61-5)

LHD EXCEPT EXPORT

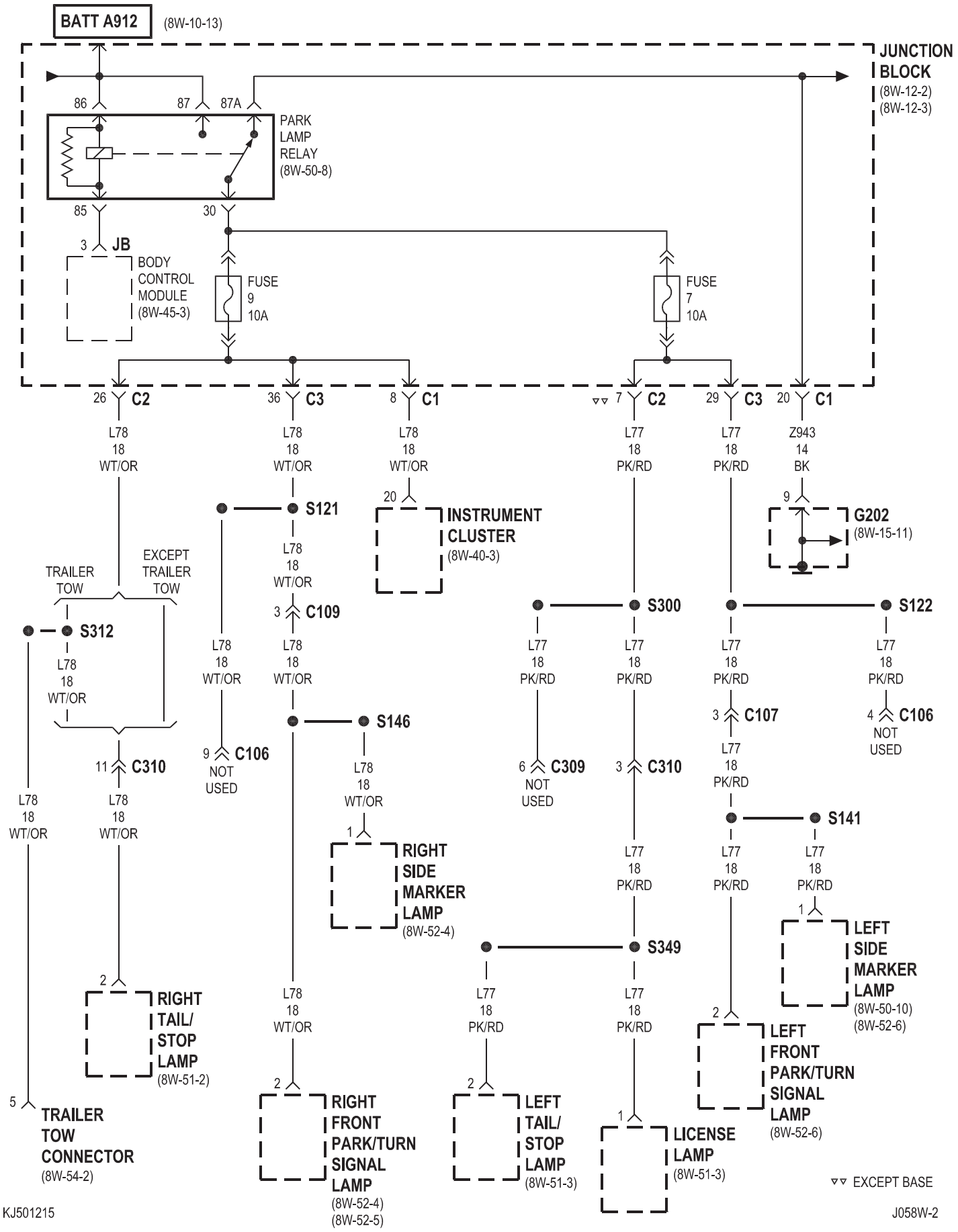

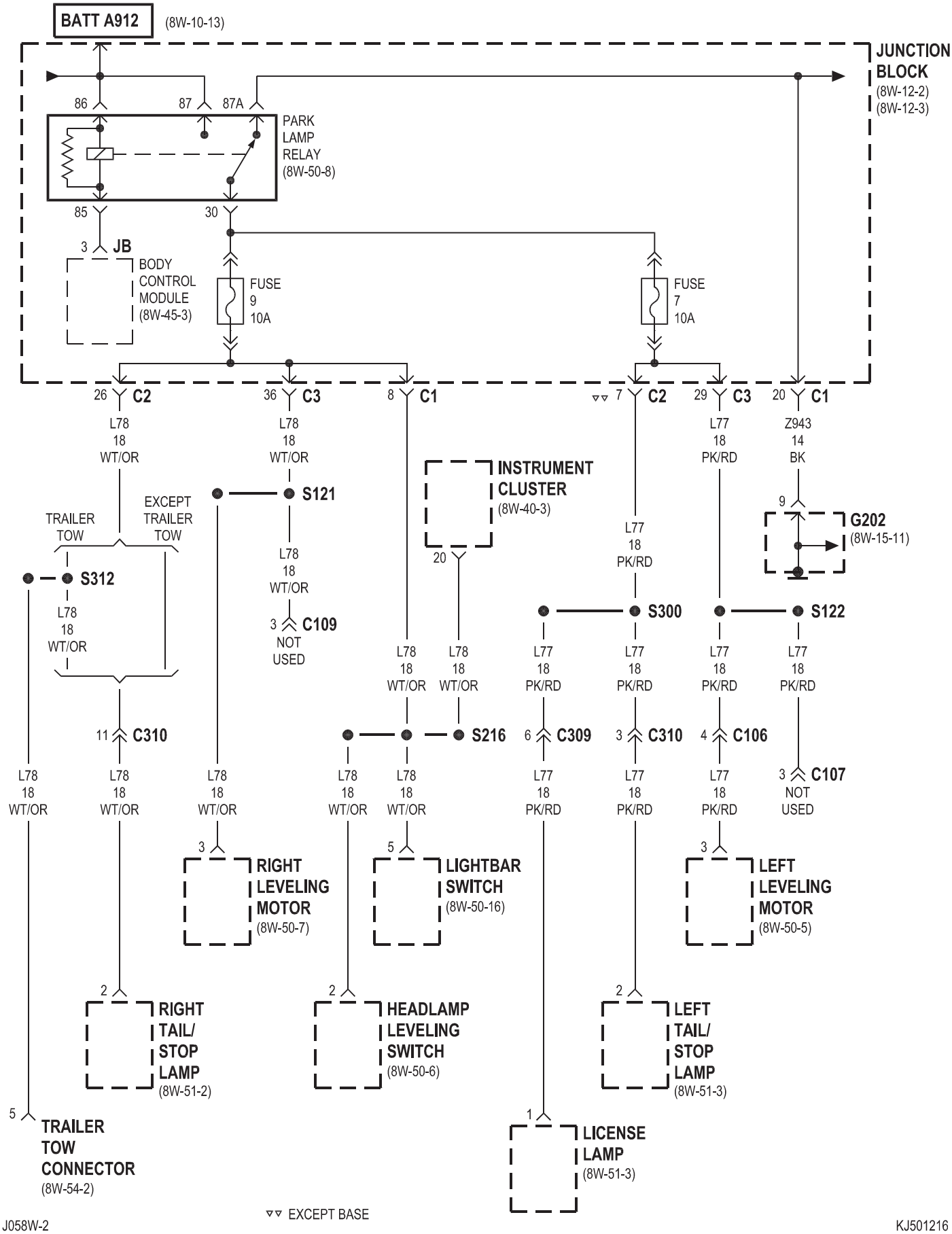
BATT A912
(8W-10-13)
JUNCTION BLOCK
(8W-12-2)
(8W-12-3)
86
87
87A
PARK LAMP RELAY
(8W-50-8)
85
30
3 JB
BODY CONTROL MODULE
(8W-45-3)
FUSE 9 10A
FUSE 7 10A
26 C2
36 C3
8 C1
▿▿ 7 C2
29 C3
20 C1
L78 18 WT/OR
L78 18 WT/OR
L77 18 PK/RD
Z943 14 BK
INSTRUMENT CLUSTER
(8W-40-3)
S121
EXCEPT TRAILER TOW
TRAILER TOW
S312
L78 18 WT/OR
L78 18 WT/OR
3 C109
NOT USED
20
L77 18 PK/RD
9
G202
(8W-15-11)
S300
S122
L78 18 WT/OR
L78 18 WT/OR
L77 18 PK/RD
L77 18 PK/RD
L77 18 PK/RD
L77 18 PK/RD
11 C310
S216
6 C309
3 C310
4 C106
3 C107
NOT USED
L78 18 WT/OR
L78 18 WT/OR
L78 18 WT/OR
L78 18 WT/OR
L78 18 WT/OR
L77 18 PK/RD
L77 18 PK/RD
L77 18 PK/RD
3
RIGHT LEVELING MOTOR
(8W-50-7)
5
LIGHTBAR SWITCH
(8W-50-16)
3
LEFT LEVELING MOTOR
(8W-50-5)
2
RIGHT TAIL/ STOP LAMP
(8W-51-2)
2
HEADLAMP LEVELING SWITCH
(8W-50-6)
2
LEFT TAIL/ STOP LAMP
(8W-51-3)
5
TRAILER TOW CONNECTOR
(8W-54-2)
1
LICENSE LAMP
(8W-51-3)
▿▿ EXCEPT BASE

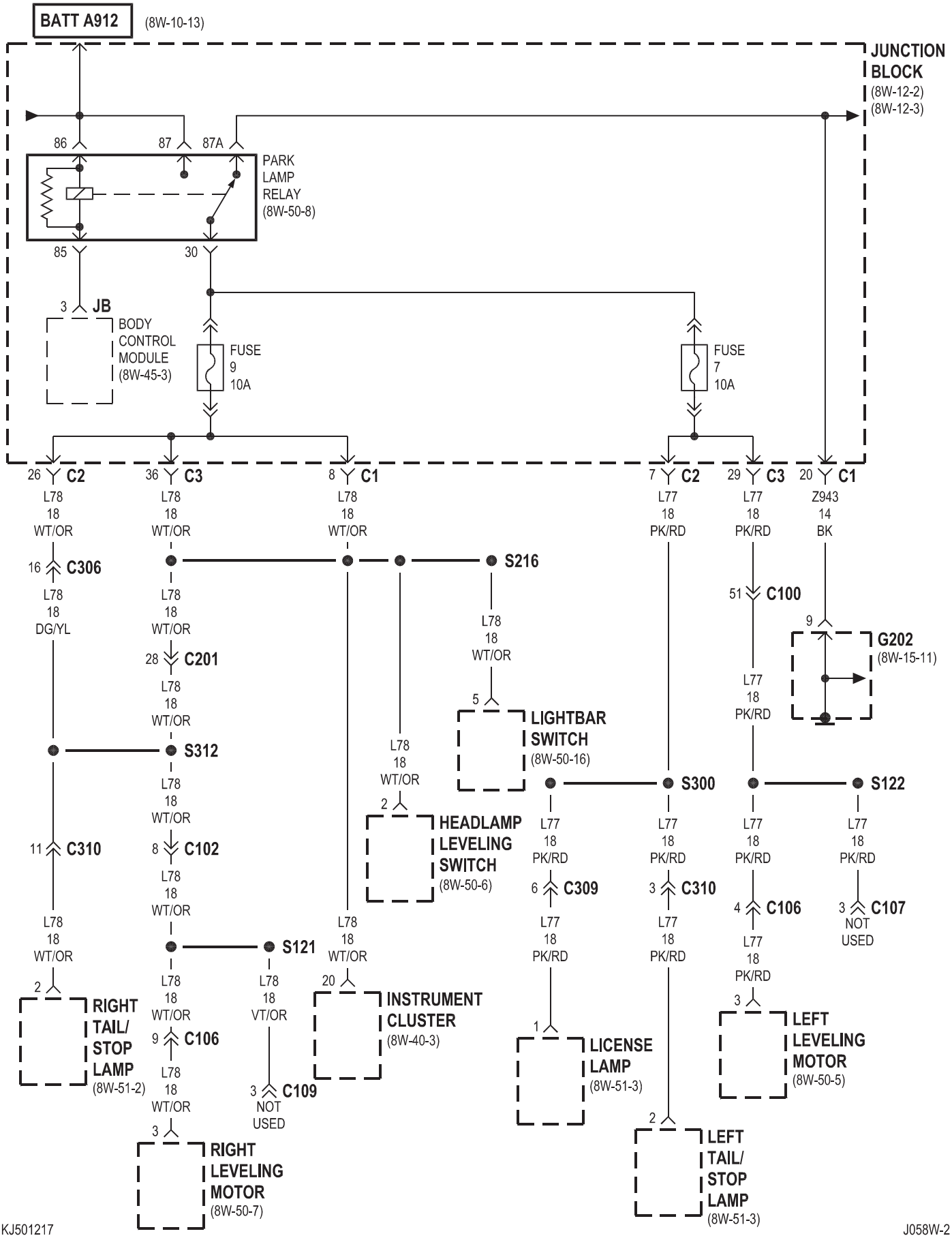
BATT A912
(8W-10-13)
JUNCTION BLOCK
(8W-12-2)
(8W-12-3)
86
87
87A
PARK LAMP RELAY
(8W-50-8)
85
30
3 JB
BODY CONTROL MODULE
(8W-45-3)
FUSE 9 10A
FUSE 7 10A
26 C2
36 C3
8 C1
7 C2
29 C3
20 C1
L78 18 WT/OR
L77 18 PK/RD
Z943 14 BK
16 C306
L78 18 DG/YL
28 C201
S216
51 C100
9
G202
(8W-15-11)
S312
5
LIGHTBAR SWITCH
(8W-50-16)
2
HEADLAMP LEVELING SWITCH
(8W-50-6)
S300
S122
11 C310
8 C102
6 C309
3 C310
4 C106
3 C107
NOT USED
S121
L78 18 VT/OR
20
INSTRUMENT CLUSTER
(8W-40-3)
RIGHT TAIL/ STOP LAMP
(8W-51-2)
9 C106
3 C109
NOT USED
RIGHT LEVELING MOTOR
(8W-50-7)
1
LICENSE LAMP
(8W-51-3)
LEFT LEVELING MOTOR
(8W-50-5)
LEFT TAIL/ STOP LAMP
(8W-51-3)

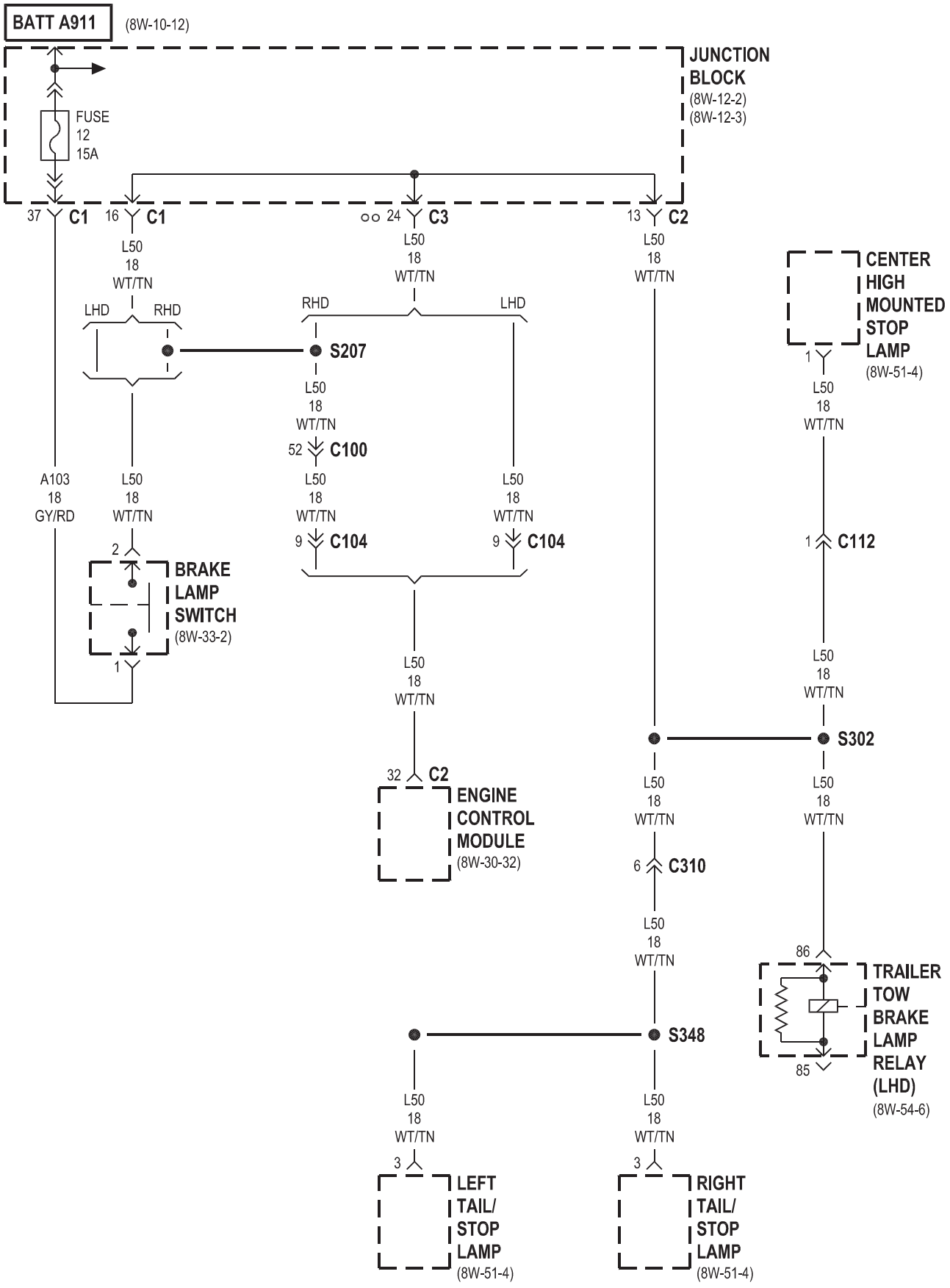
BATT A911
(8W-10-12)
JUNCTION BLOCK
(8W-12-2)
(8W-12-3)
FUSE 12 15A
37 C1
16 C1
24 C3
13 C2
L50 18 WT/TN
LHD
RHD
S207
52 C100
A103 18 GY/RD
2
1
BRAKE LAMP SWITCH
(8W-33-2)
9 C104
32 C2
ENGINE CONTROL MODULE
(8W-30-32)
CENTER HIGH MOUNTED STOP LAMP
(8W-51-4)
1 C112
S302
6 C310
S348
86
85
TRAILER TOW BRAKE LAMP RELAY (LHD)
(8W-54-6)
3
LEFT TAIL/ STOP LAMP
(8W-51-4)
RIGHT TAIL/ STOP LAMP
(8W-51-4)

oo DIESEL

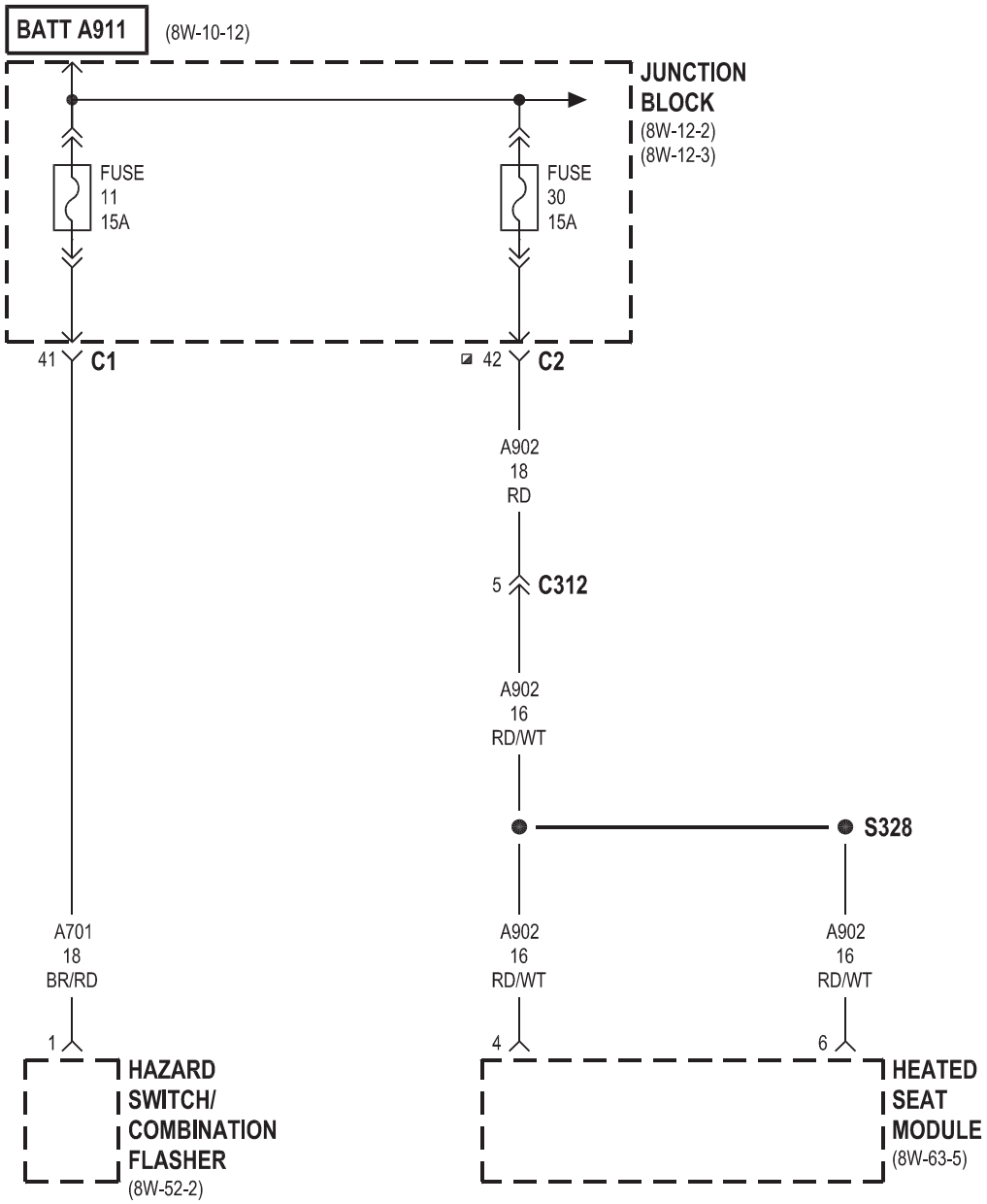

◪ LHD HIGHLINE/RHD

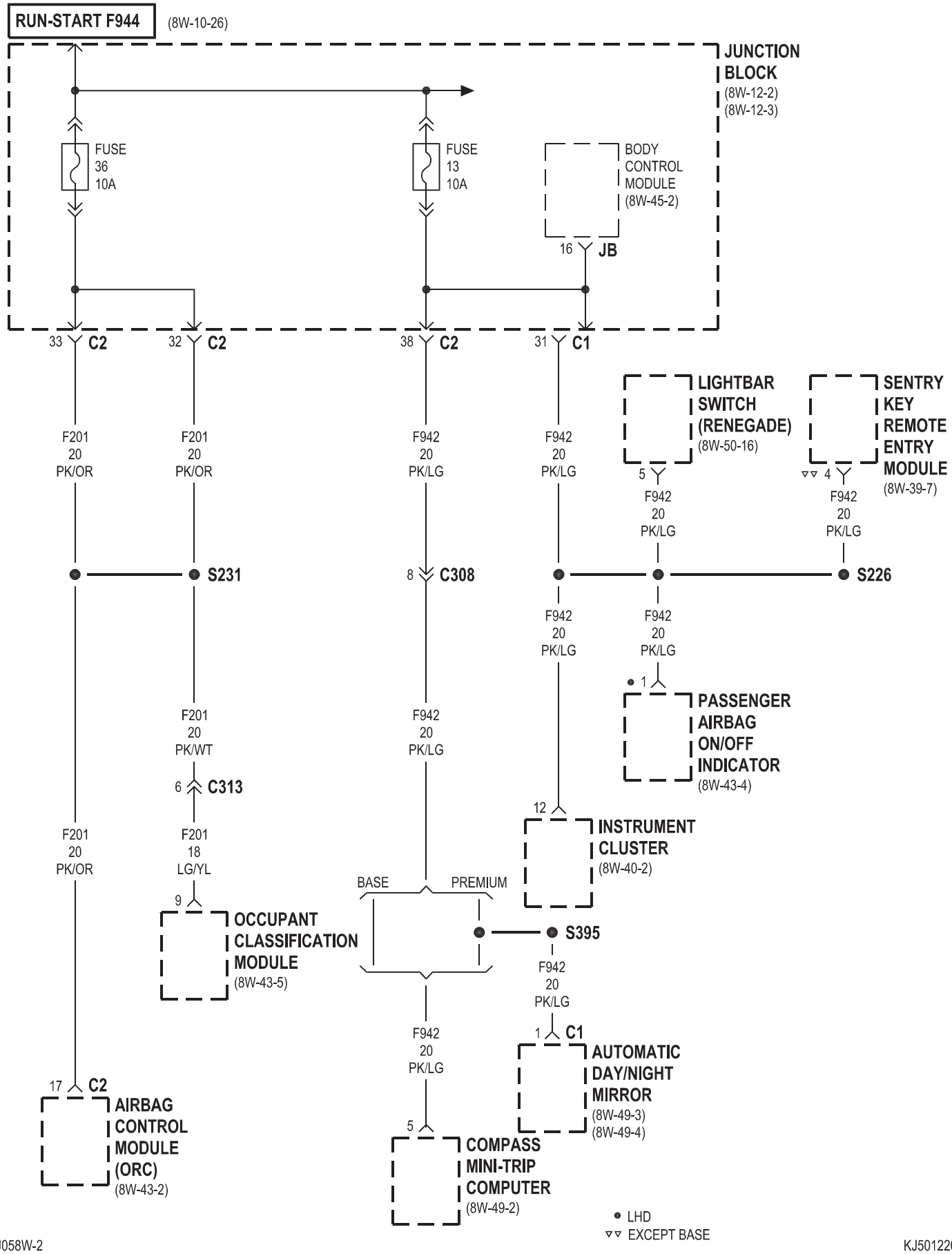
RUN-START F944
(8W-10-26)
JUNCTION BLOCK
(8W-12-2)
(8W-12-3)
FUSE 36 10A
FUSE 13 10A
BODY CONTROL MODULE
(8W-45-2)
16 JB
33 C2
32 C2
38 C2
31 C1
F201 20 PK/OR
F201 20 PK/OR
F942 20 PK/LG
F942 20 PK/LG
LIGHTBAR SWITCH (RENEGADE)
(8W-50-16)
5
F942 20 PK/LG
SENTRY KEY REMOTE ENTRY MODULE
(8W-39-7)
4
F942 20 PK/LG
S231
8 C308
S226
F942 20 PK/LG
F942 20 PK/LG
1
PASSENGER AIRBAG ON/OFF INDICATOR
(8W-43-4)
F201 20 PK/WT
6 C313
F942 20 PK/LG
12
INSTRUMENT CLUSTER
(8W-40-2)
F201 20 PK/OR
F201 18 LG/YL
9
OCCUPANT CLASSIFICATION MODULE
(8W-43-5)
BASE
PREMIUM
S395
F942 20 PK/LG
1 C1
AUTOMATIC DAY/NIGHT MIRROR
(8W-49-3)
(8W-49-4)
F942 20 PK/LG
17 C2
AIRBAG CONTROL MODULE (ORC)
(8W-43-2)
5
COMPASS MINI-TRIP COMPUTER
(8W-49-2)
LHD
EXCEPT BASE

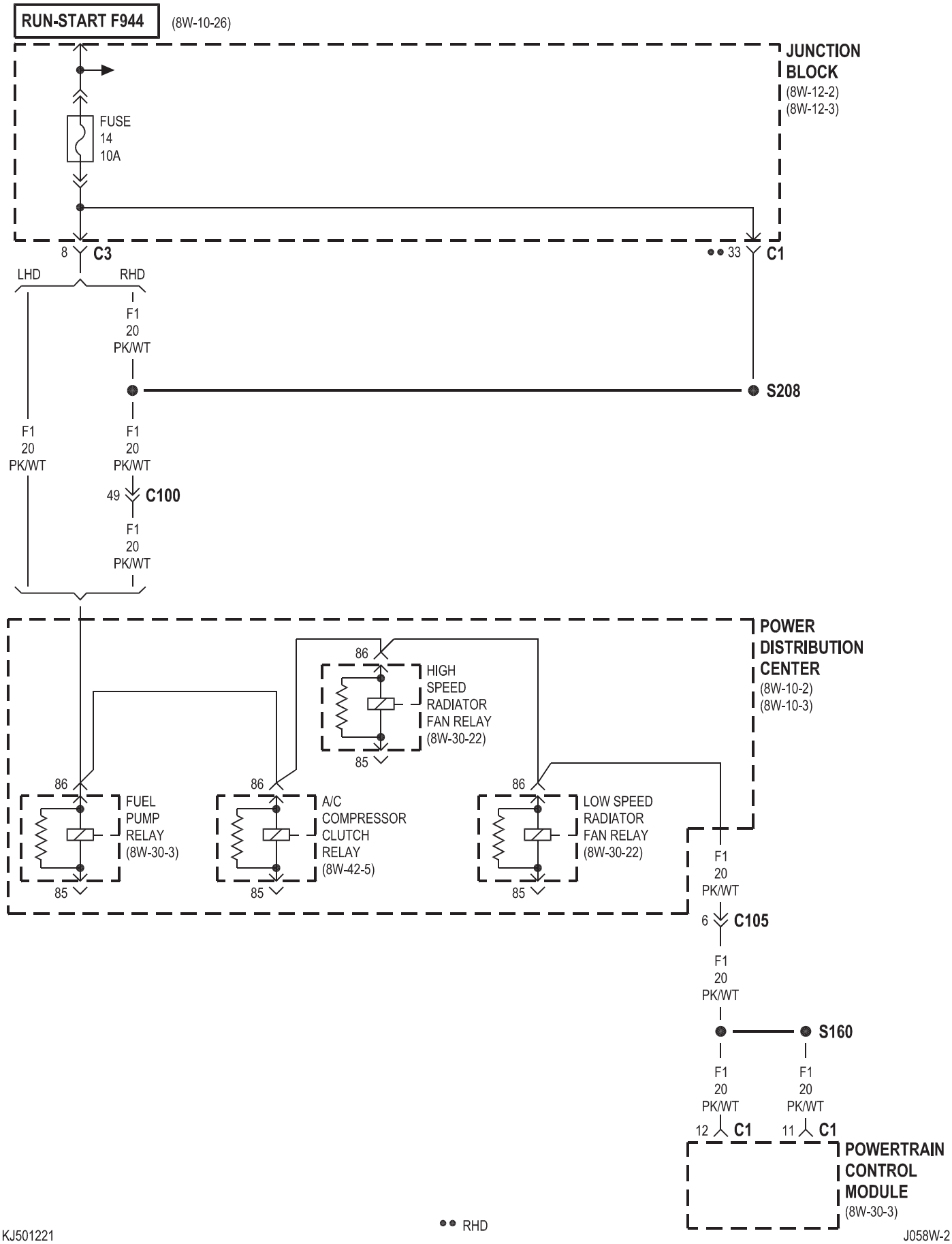
RUN-START F944
(8W-10-26)
JUNCTION BLOCK
(8W-12-2)
(8W-12-3)
FUSE
14
10A
8
C3
33
C1
LHD
RHD
F1
20
PK/WT
S208
49
C100
POWER DISTRIBUTION CENTER
(8W-10-2)
(8W-10-3)
86
85
HIGH SPEED RADIATOR FAN RELAY
(8W-30-22)
FUEL PUMP RELAY
(8W-30-3)
A/C COMPRESSOR CLUTCH RELAY
(8W-42-5)
LOW SPEED RADIATOR FAN RELAY
(8W-30-22)
6
C105
S160
12
11
POWERTRAIN CONTROL MODULE
(8W-30-3)
RHD

DIESEL

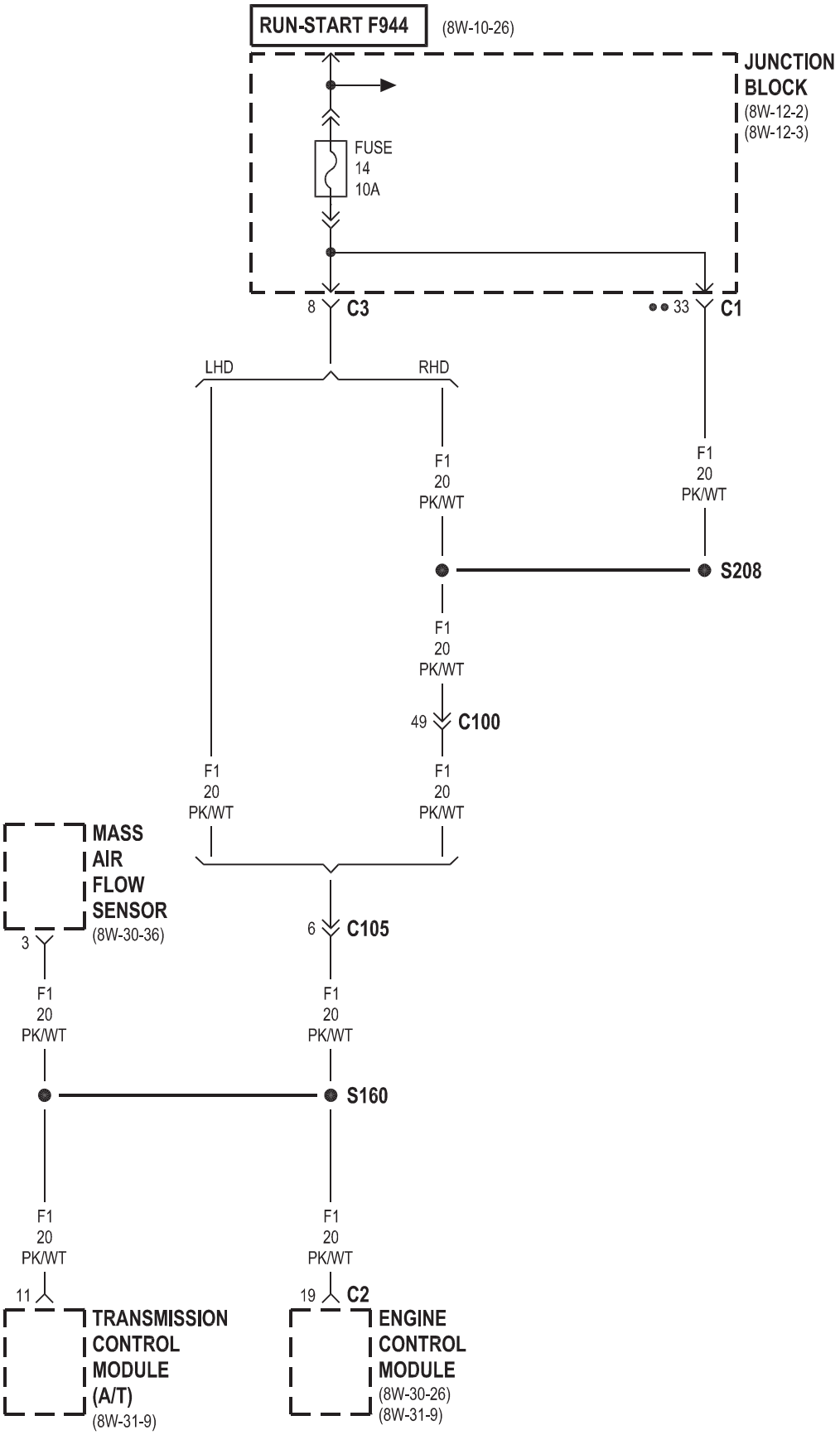
RUN-START F944
(8W-10-26)
JUNCTION BLOCK
(8W-12-2)
(8W-12-3)
FUSE
14
10A
8
C3
33
C1
LHD
RHD
F1
20
PK/WT
S208
49
C100
MASS AIR FLOW SENSOR
(8W-30-36)
3
6
C105
S160
11
TRANSMISSION CONTROL MODULE (A/T)
(8W-31-9)
19
C2
ENGINE CONTROL MODULE
(8W-30-26)
(8W-31-9)

•• RHD

LHD

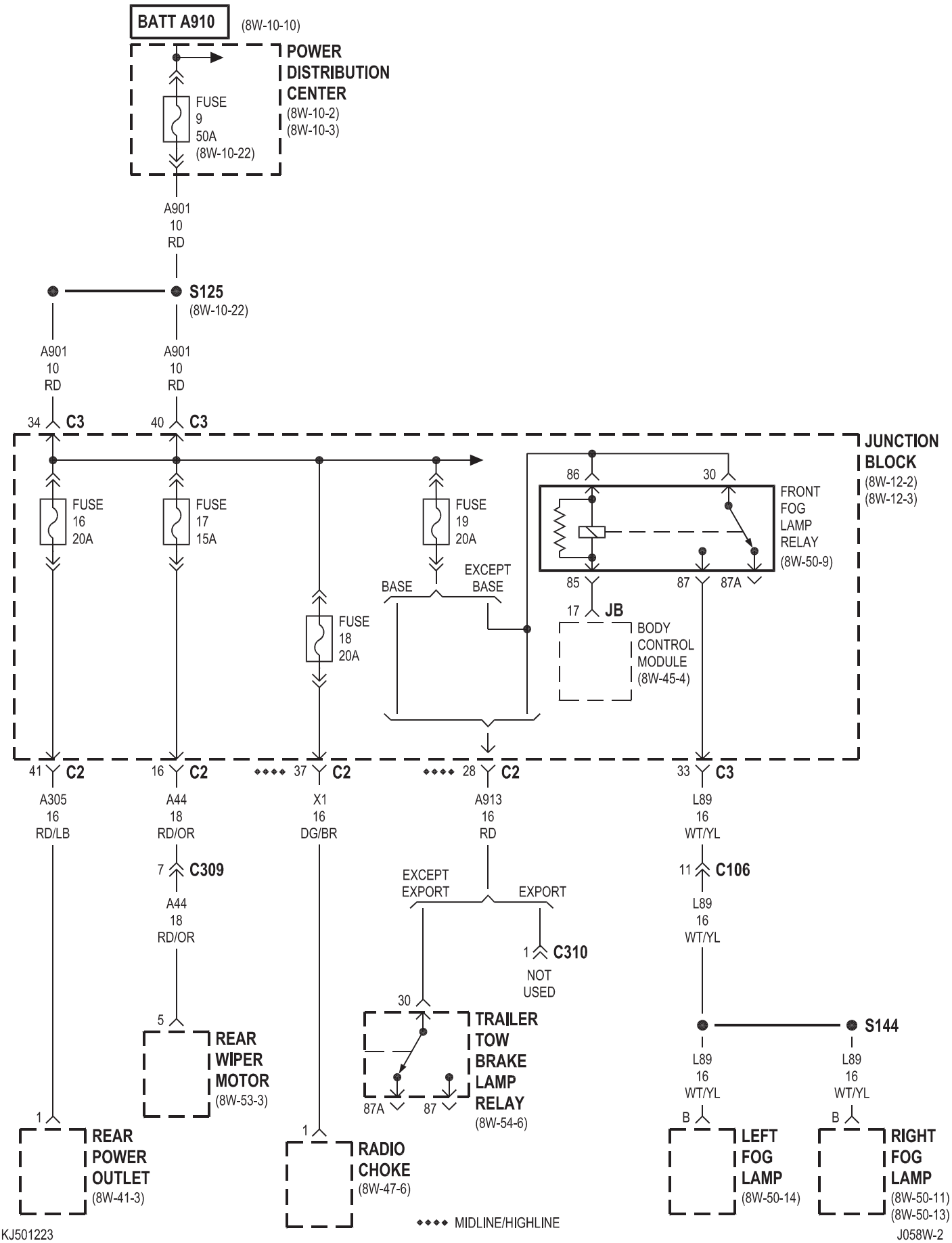
BATT A910
(8W-10-10)
POWER DISTRIBUTION CENTER
(8W-10-2)
(8W-10-3)
FUSE 9 50A
(8W-10-22)
A901 10 RD
S125
(8W-10-22)
A901 10 RD
A901 10 RD
34 C3
40 C3
JUNCTION BLOCK
(8W-12-2)
(8W-12-3)
FUSE 16 20A
FUSE 17 15A
FUSE 18 20A
FUSE 19 20A
BASE
EXCEPT BASE
86
30
FRONT FOG LAMP RELAY
(8W-50-9)
85
87
87A
17 JB
BODY CONTROL MODULE
(8W-45-4)
41 C2
16 C2
37 C2
28 C2
33 C3
A305 16 RD/LB
A44 18 RD/OR
X1 16 DG/BR
A913 16 RD
L89 16 WT/YL
7 C309
A44 18 RD/OR
EXCEPT EXPORT
EXPORT
1 C310
NOT USED
11 C106
L89 16 WT/YL
30
TRAILER TOW BRAKE LAMP RELAY
(8W-54-6)
87A
87
5
REAR WIPER MOTOR
(8W-53-3)
S144
L89 16 WT/YL
L89 16 WT/YL
1
REAR POWER OUTLET
(8W-41-3)
1
RADIO CHOKE
(8W-47-6)
B
LEFT FOG LAMP
(8W-50-14)
B
RIGHT FOG LAMP
(8W-50-11)
(8W-50-13)
MIDLINE/HIGHLINE
KJ501223
J058W-2

RHD

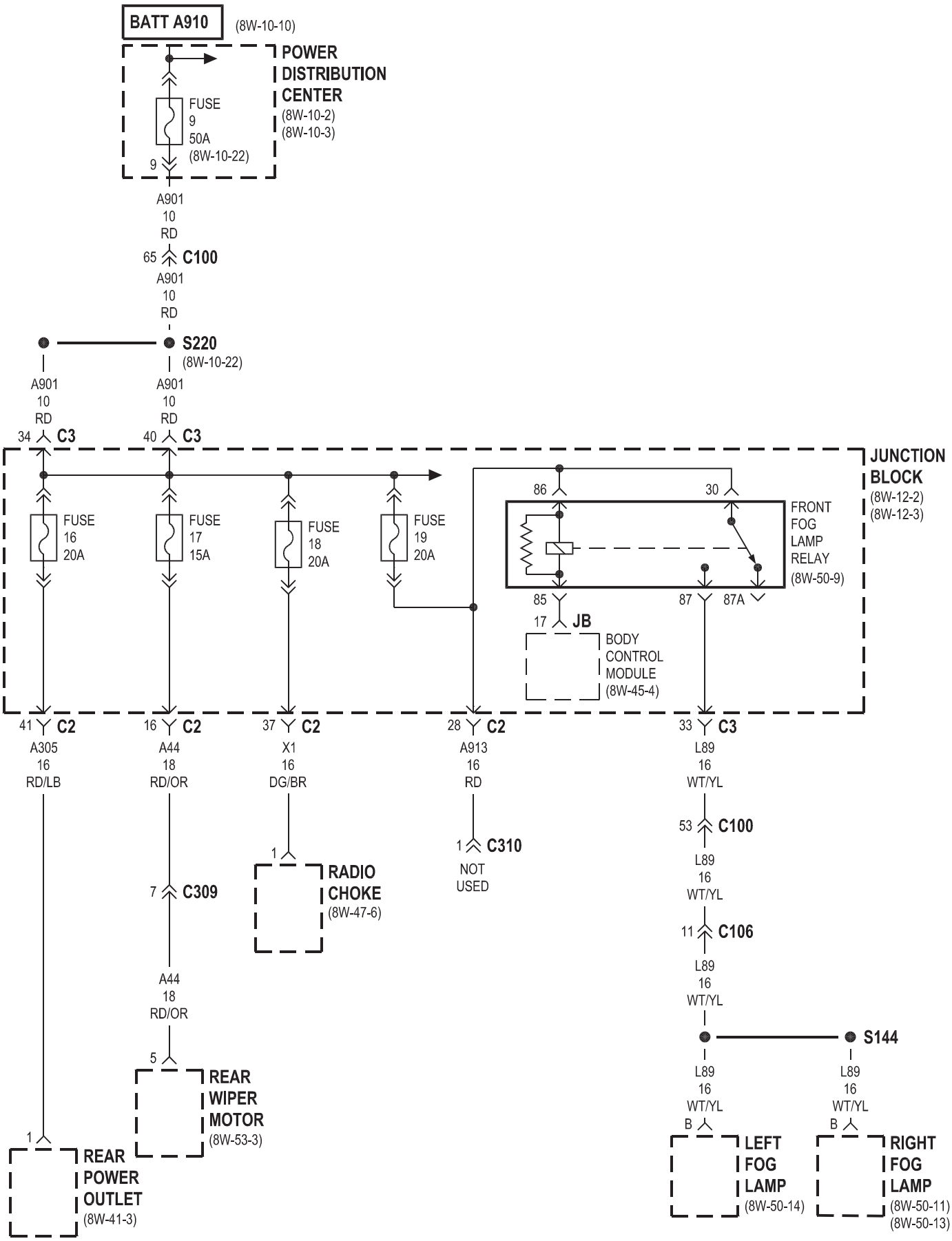

J058W-2 KJ501224

8W-12 JUNCTION BLOCK
LHD

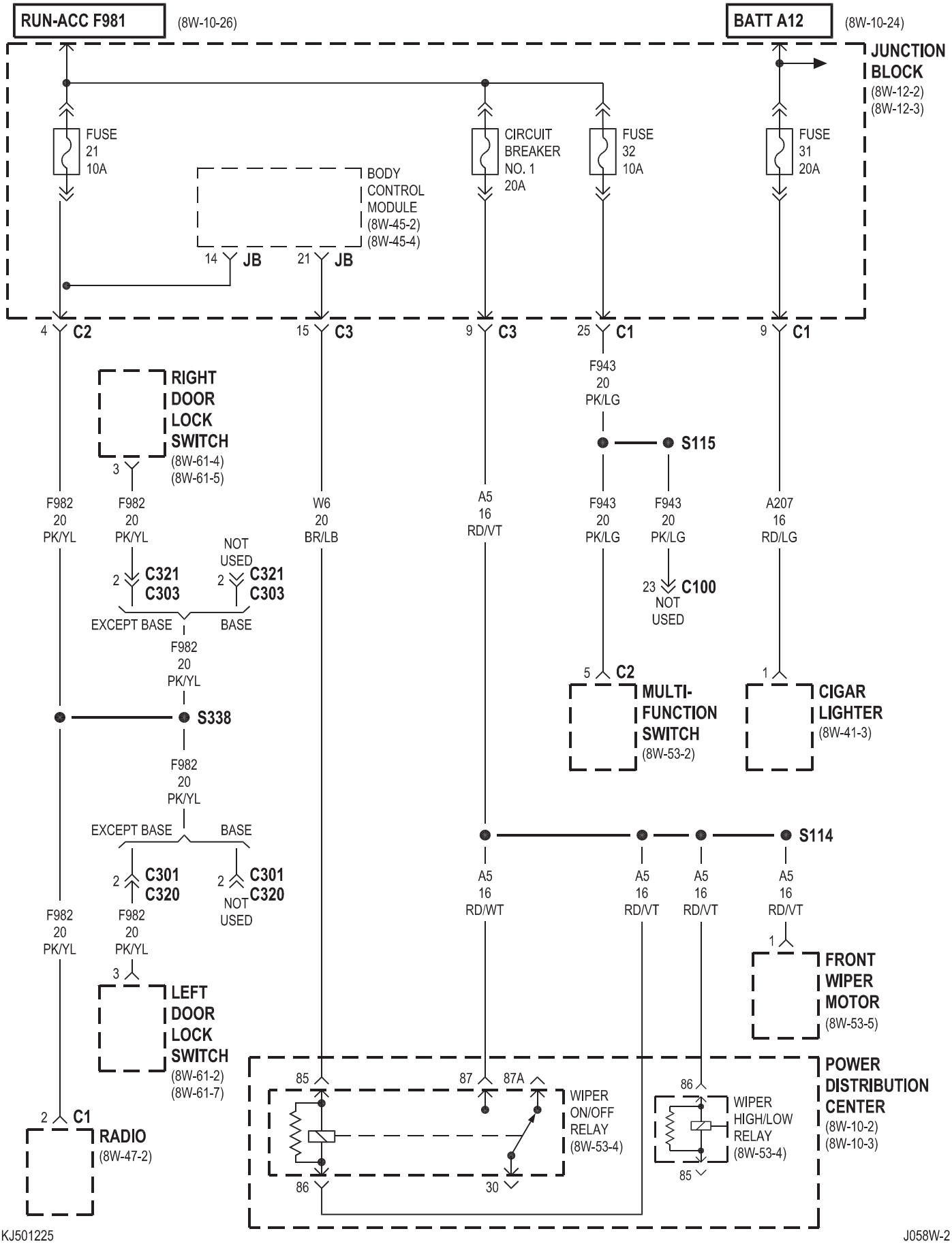

RHD

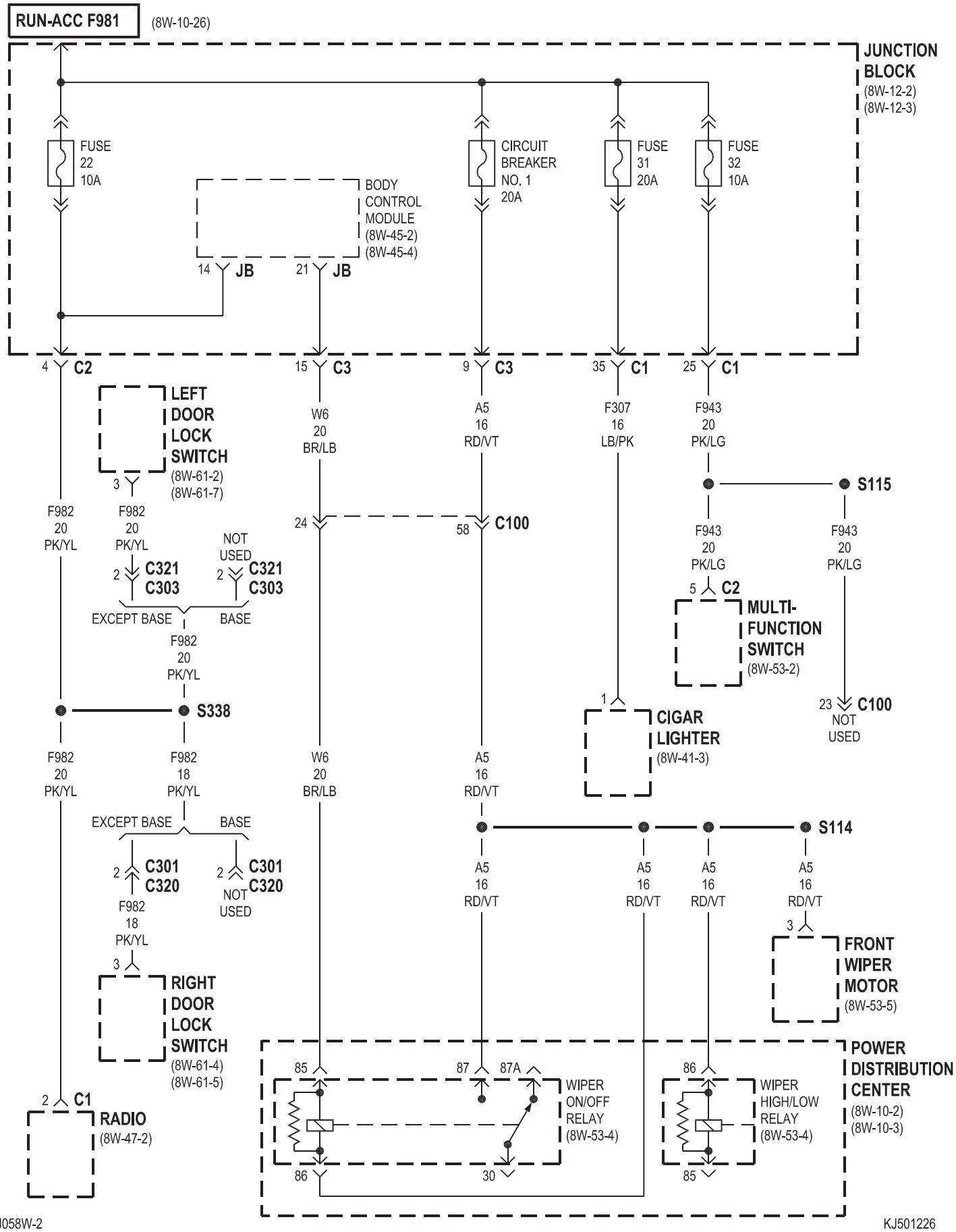
RUN-ACC F981
(8W-10-26)
JUNCTION BLOCK
(8W-12-2)
(8W-12-3)
FUSE 22 10A
BODY CONTROL MODULE
(8W-45-2)
(8W-45-4)
14 JB
21 JB
CIRCUIT BREAKER NO. 1 20A
FUSE 31 20A
FUSE 32 10A
4 C2
15 C3
9 C3
35 C1
25 C1
LEFT DOOR LOCK SWITCH
(8W-61-2)
(8W-61-7)
3
W6 20 BR/LB
A5 16 RD/VT
F307 16 LB/PK
F943 20 PK/LG
S115
F982 20 PK/YL
F982 20 PK/YL
24
58 C100
F943 20 PK/LG
F943 20 PK/LG
NOT USED
2 C321 C303
2 C321 C303
EXCEPT BASE
BASE
F982 20 PK/YL
5 C2
MULTI-FUNCTION SWITCH
(8W-53-2)
S338
1
CIGAR LIGHTER
(8W-41-3)
23 C100
NOT USED
F982 20 PK/YL
F982 18 PK/YL
W6 20 BR/LB
A5 16 RD/VT
EXCEPT BASE
BASE
S114
2 C301 C320
2 C301 C320
NOT USED
A5 16 RD/VT
A5 16 RD/VT
A5 16 RD/VT
A5 16 RD/VT
F982 18 PK/YL
3
3
FRONT WIPER MOTOR
(8W-53-5)
RIGHT DOOR LOCK SWITCH
(8W-61-4)
(8W-61-5)
POWER DISTRIBUTION CENTER
(8W-10-2)
(8W-10-3)
85
87
87A
86
WIPER ON/OFF RELAY
(8W-53-4)
WIPER HIGH/LOW RELAY
(8W-53-4)
86
30
85
2 C1
RADIO
(8W-47-2)

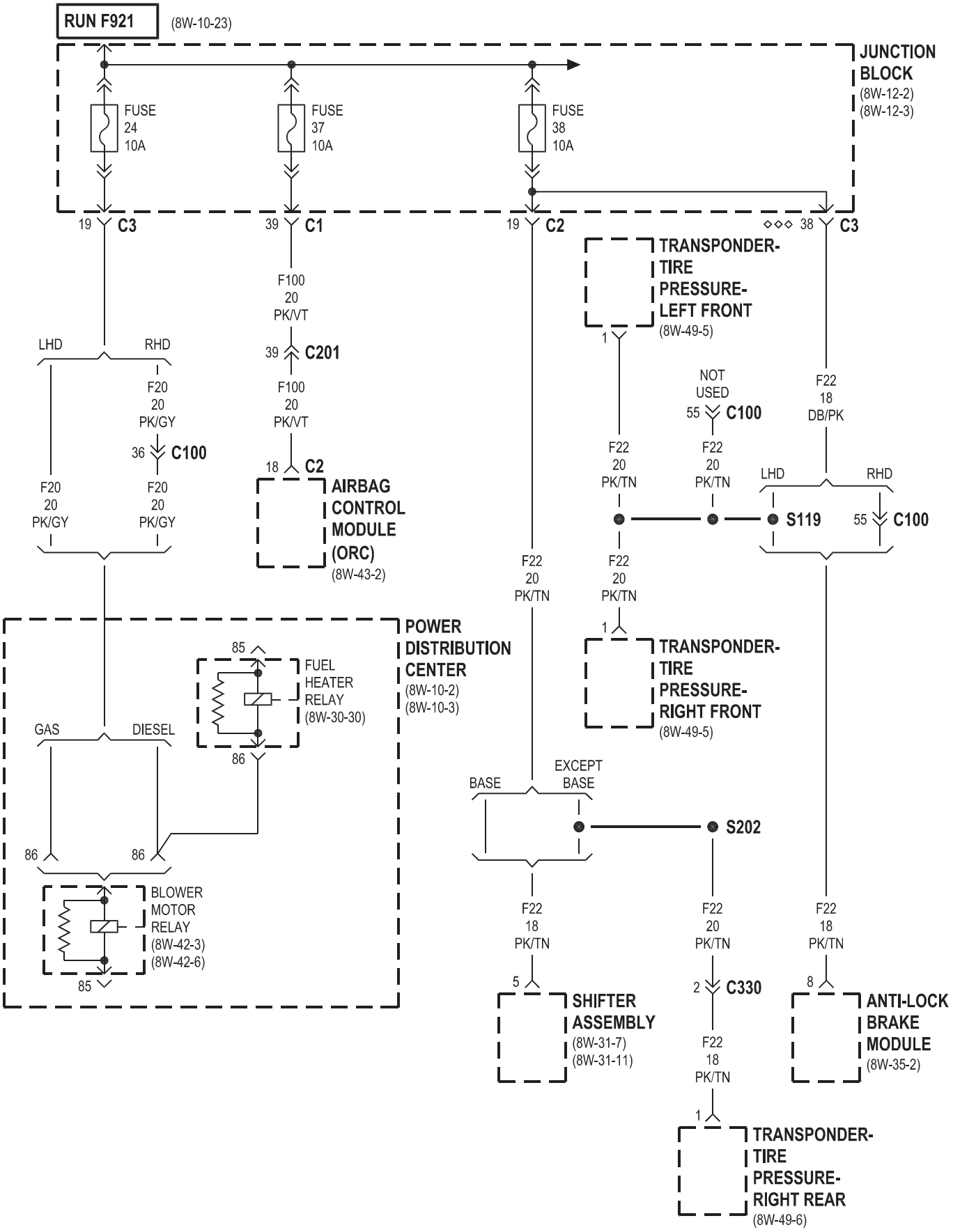
RUN F921
(8W-10-23)
JUNCTION BLOCK
(8W-12-2)
(8W-12-3)
FUSE 24 10A
FUSE 37 10A
FUSE 38 10A
19 C3
39 C1
19 C2
◇◇◇ 38 C3
TRANSPONDER-TIRE PRESSURE-LEFT FRONT
(8W-49-5)
F100 20 PK/VT
39 C201
F100 20 PK/VT
18 C2
AIRBAG CONTROL MODULE (ORC)
(8W-43-2)
LHD
RHD
F20 20 PK/GY
36 C100
F20 20 PK/GY
F20 20 PK/GY
1
NOT USED
55 C100
F22 18 DB/PK
F22 20 PK/TN
F22 20 PK/TN
LHD
RHD
S119
55 C100
F22 20 PK/TN
F22 20 PK/TN
1
TRANSPONDER-TIRE PRESSURE-RIGHT FRONT
(8W-49-5)
POWER DISTRIBUTION CENTER
(8W-10-2)
(8W-10-3)
85
FUEL HEATER RELAY
(8W-30-30)
86
GAS
DIESEL
86
86
BLOWER MOTOR RELAY
(8W-42-3)
(8W-42-6)
85
BASE
EXCEPT BASE
S202
F22 18 PK/TN
F22 20 PK/TN
F22 18 PK/TN
5
SHIFTER ASSEMBLY
(8W-31-7)
(8W-31-11)
2 C330
F22 18 PK/TN
8
ANTI-LOCK BRAKE MODULE
(8W-35-2)
1
TRANSPONDER-TIRE PRESSURE-RIGHT REAR
(8W-49-6)

◇◇◇ ABS

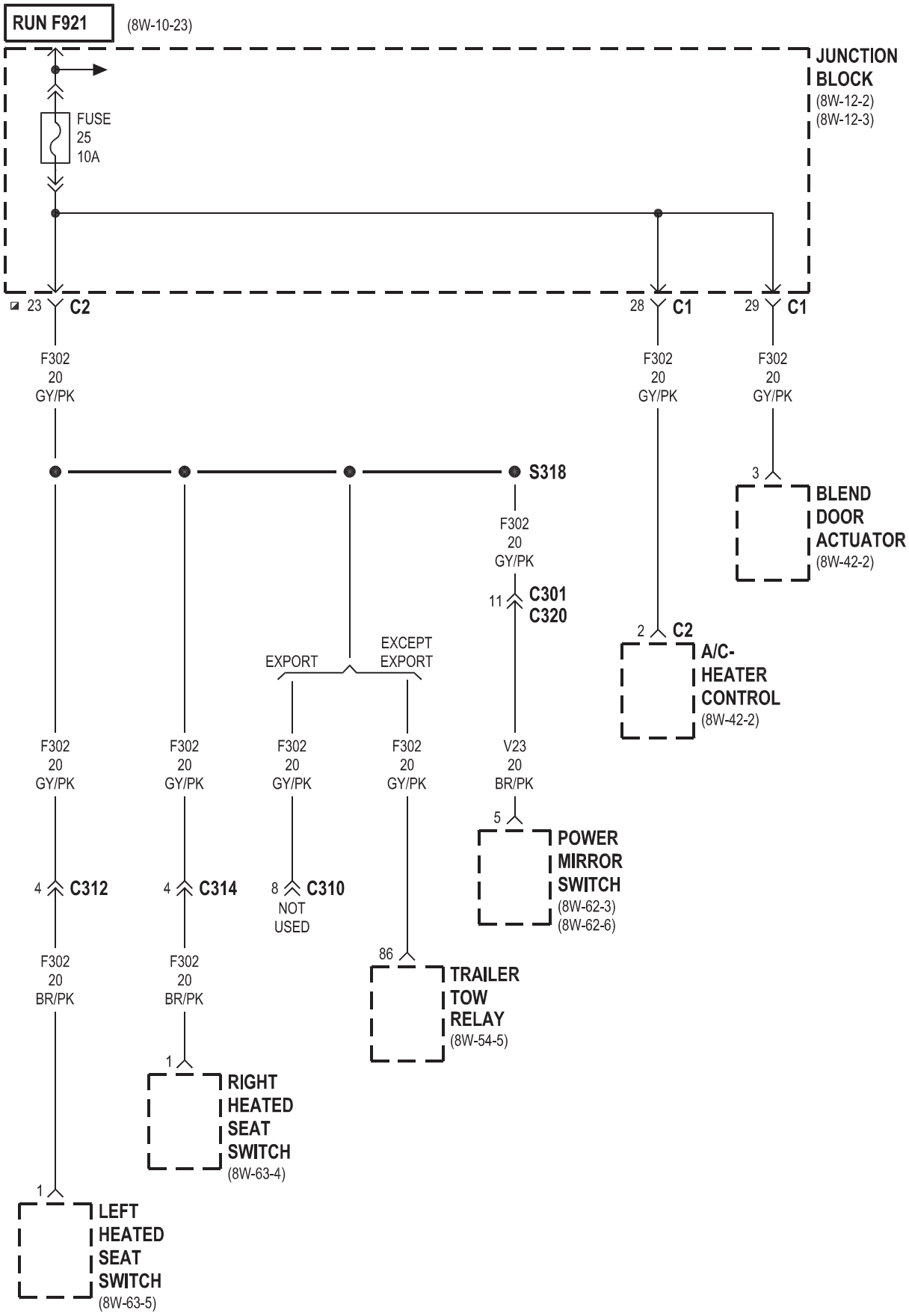

◪ LHD HIGHLINE/RHD

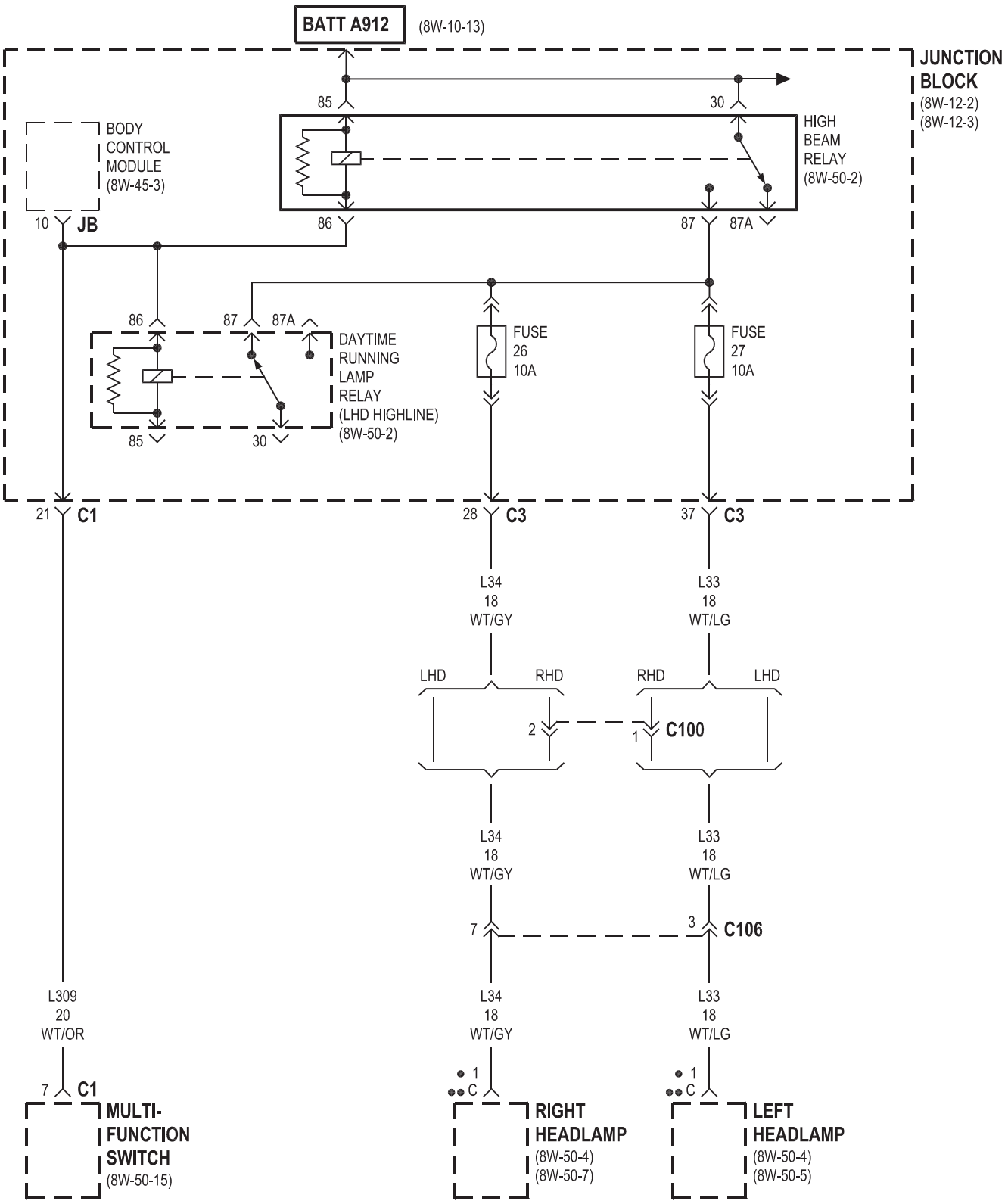

● EXPORT
●● EXCEPT EXPORT

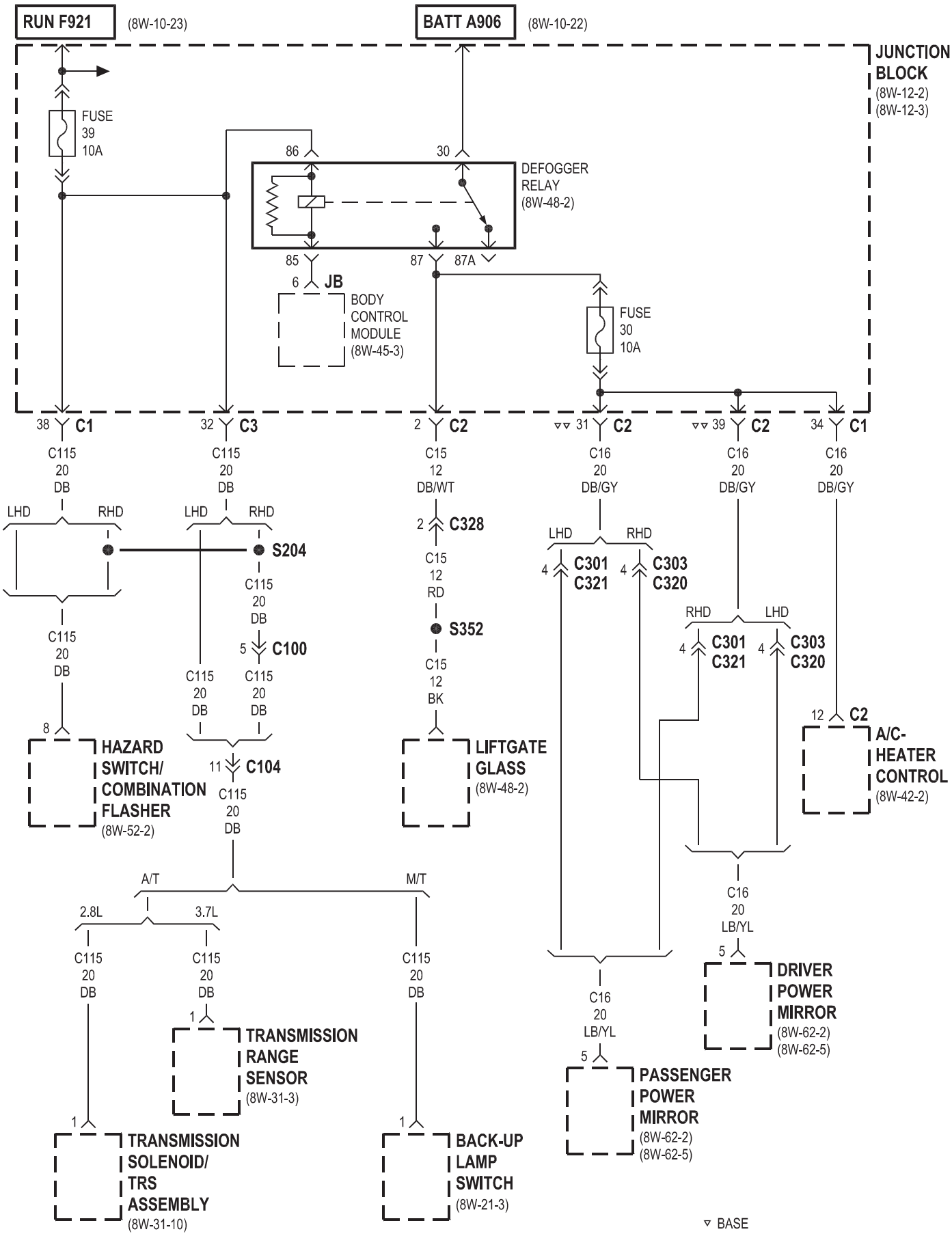
RUN F921
(8W-10-23)
BATT A906
(8W-10-22)
JUNCTION BLOCK
(8W-12-2)
(8W-12-3)
FUSE 39 10A
86
30
DEFOGGER RELAY
(8W-48-2)
85
87
87A
6
JB
BODY CONTROL MODULE
(8W-45-3)
FUSE 30 10A
38 C1
32 C3
2 C2
31 C2
39 C2
34 C1
C115 20 DB
C115 20 DB
C15 12 DB/WT
C16 20 DB/GY
C16 20 DB/GY
C16 20 DB/GY
LHD
RHD
S204
2 C328
C15 12 RD
S352
C15 12 BK
C115 20 DB
5 C100
C115 20 DB
C115 20 DB
8
HAZARD SWITCH/ COMBINATION FLASHER
(8W-52-2)
11 C104
C115 20 DB
LIFTGATE GLASS
(8W-48-2)
4 C301 C321
4 C303 C320
12 C2
A/C-HEATER CONTROL
(8W-42-2)
C16 20 LB/YL
5
DRIVER POWER MIRROR
(8W-62-2)
(8W-62-5)
A/T
M/T
2.8L
3.7L
C115 20 DB
1
TRANSMISSION RANGE SENSOR
(8W-31-3)
TRANSMISSION SOLENOID/ TRS ASSEMBLY
(8W-31-10)
BACK-UP LAMP SWITCH
(8W-21-3)
PASSENGER POWER MIRROR
(8W-62-2)
(8W-62-5)
▽ BASE
▽▽ EXCEPT BASE

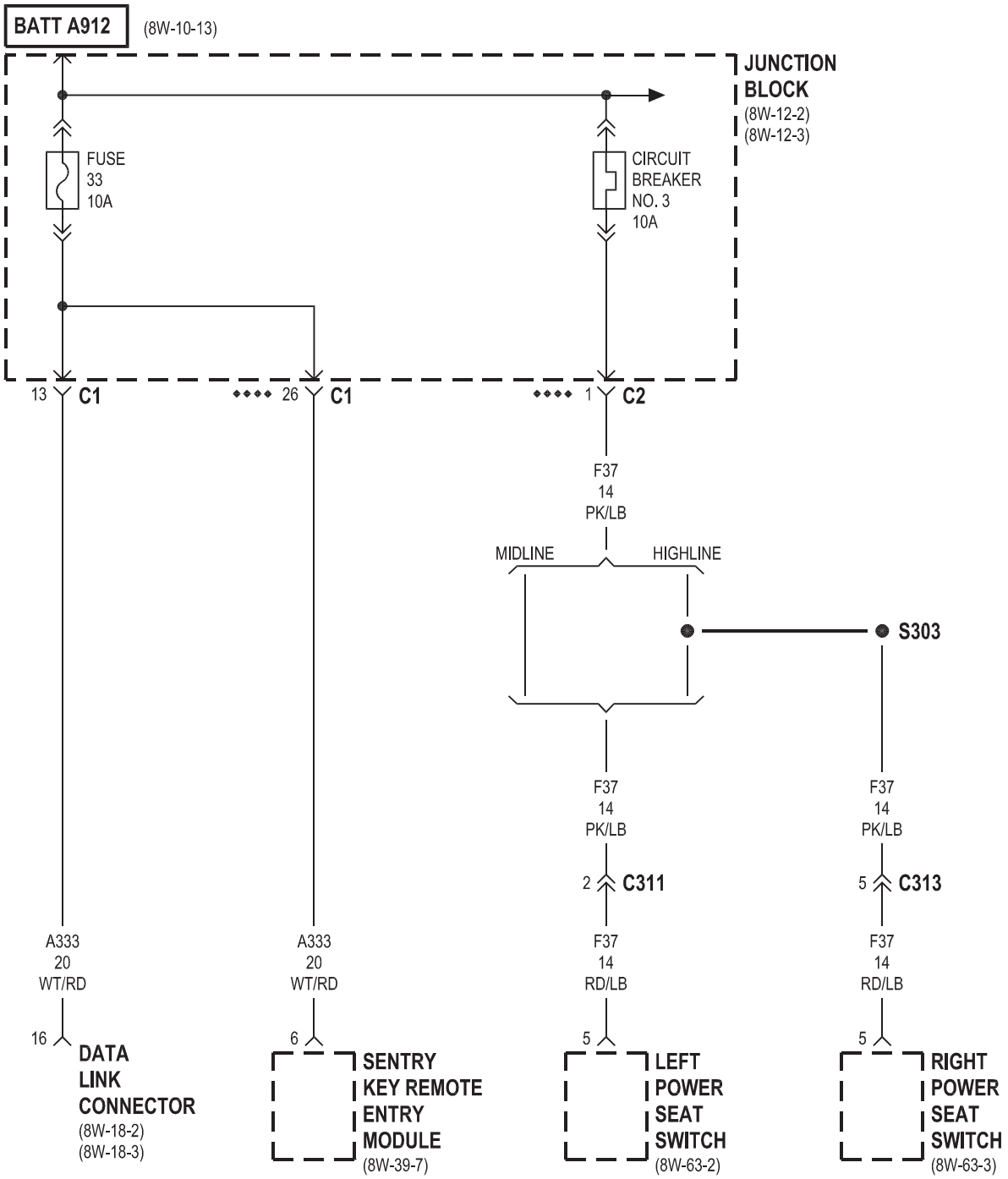

◆◆◆◆ MIDLINE/HIGHLINE

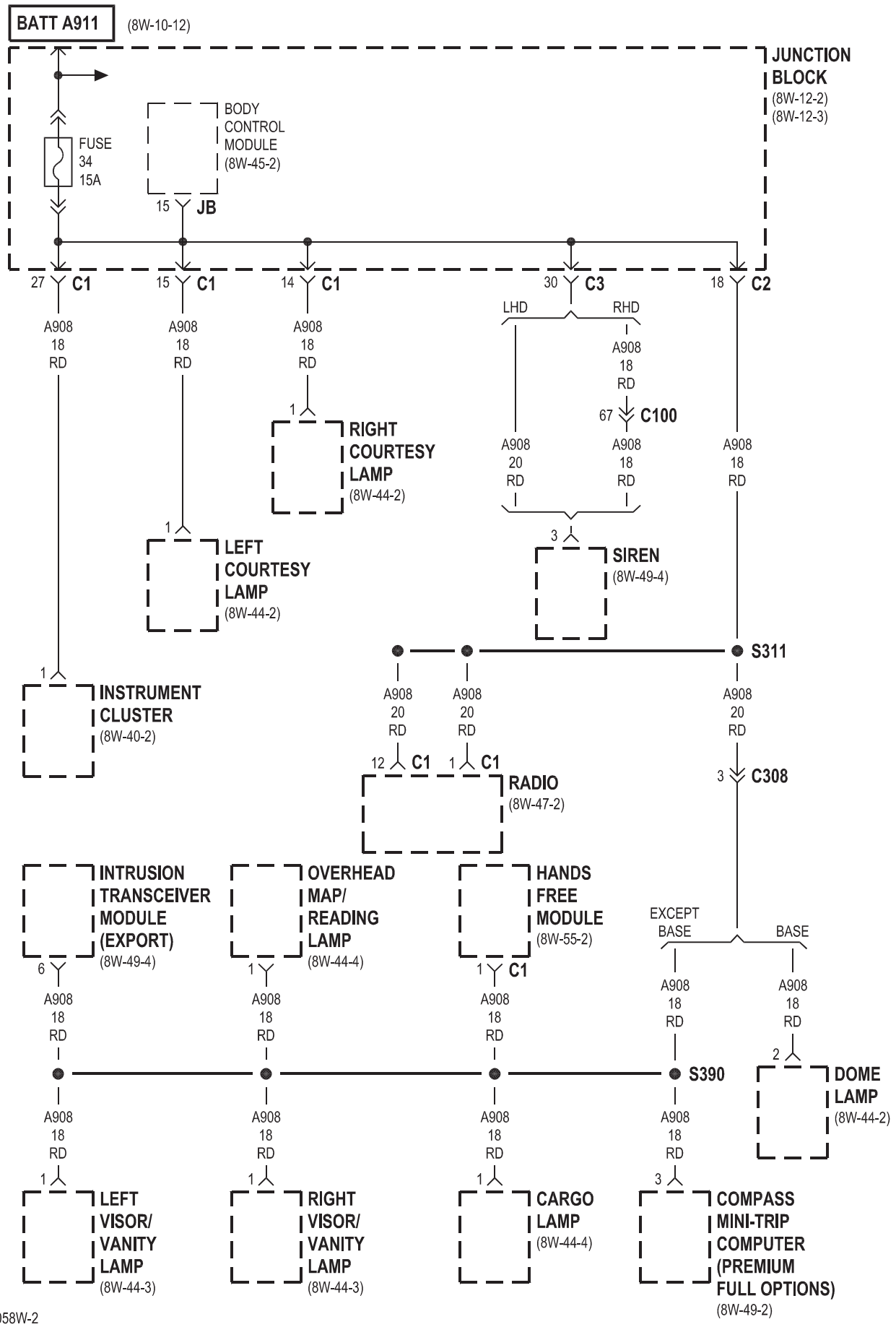
BATT A911
(8W-10-12)
JUNCTION BLOCK
(8W-12-2)
(8W-12-3)
FUSE 34 15A
BODY CONTROL MODULE
(8W-45-2)
15 JB
27 C1
15 C1
14 C1
30 C3
18 C2
A908 18 RD
LHD
RHD
67 C100
A908 20 RD
1
RIGHT COURTESY LAMP
(8W-44-2)
LEFT COURTESY LAMP
(8W-44-2)
3
SIREN
(8W-49-4)
S311
INSTRUMENT CLUSTER
(8W-40-2)
12 C1
1 C1
RADIO
(8W-47-2)
3 C308
INTRUSION TRANSCEIVER MODULE (EXPORT)
(8W-49-4)
OVERHEAD MAP/ READING LAMP
(8W-44-4)
HANDS FREE MODULE
(8W-55-2)
6
EXCEPT BASE
BASE
S390
2
DOME LAMP
(8W-44-2)
LEFT VISOR/ VANITY LAMP
(8W-44-3)
RIGHT VISOR/ VANITY LAMP
(8W-44-3)
CARGO LAMP
(8W-44-4)
COMPASS MINI-TRIP COMPUTER (PREMIUM FULL OPTIONS)
(8W-49-2)

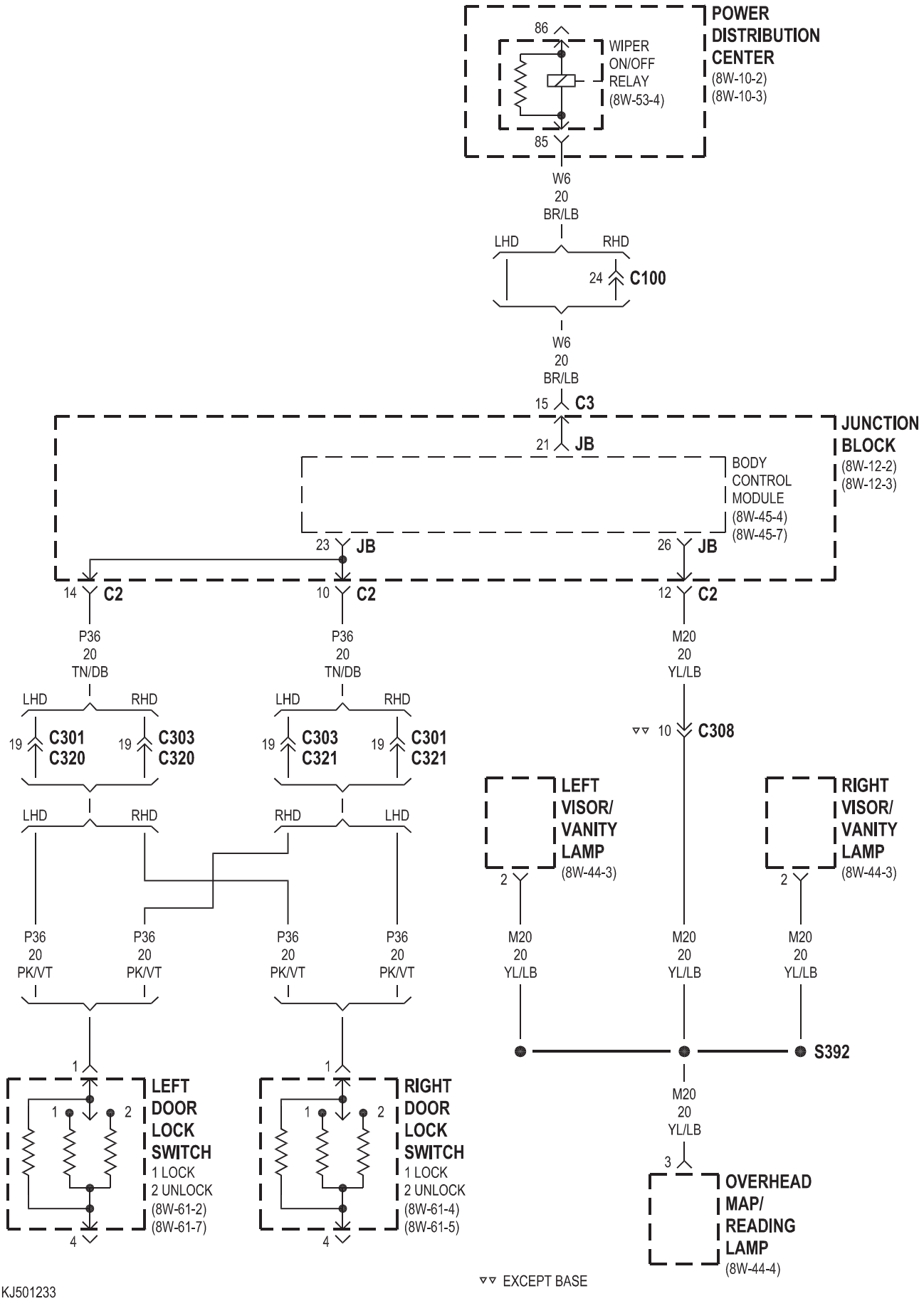
POWER DISTRIBUTION CENTER
(8W-10-2)
(8W-10-3)
WIPER ON/OFF RELAY
(8W-53-4)
86
85
W6
20
BR/LB
LHD
RHD
24
C100
W6
20
BR/LB
15
C3
21
JB
JUNCTION BLOCK
(8W-12-2)
(8W-12-3)
BODY CONTROL MODULE
(8W-45-4)
(8W-45-7)
23
JB
26
JB
14
C2
10
C2
12
C2
P36
20
TN/DB
P36
20
TN/DB
M20
20
YL/LB
19
C301
C320
19
C303
C320
19
C303
C321
19
C301
C321
10
C308
LEFT VISOR/ VANITY LAMP
(8W-44-3)
RIGHT VISOR/ VANITY LAMP
(8W-44-3)
2
2
P36
20
PK/VT
M20
20
YL/LB
S392
1
2
LEFT DOOR LOCK SWITCH
1 LOCK
2 UNLOCK
(8W-61-2)
(8W-61-7)
RIGHT DOOR LOCK SWITCH
1 LOCK
2 UNLOCK
(8W-61-4)
(8W-61-5)
4
3
OVERHEAD MAP/ READING LAMP
(8W-44-4)

▿▿ EXCEPT BASE

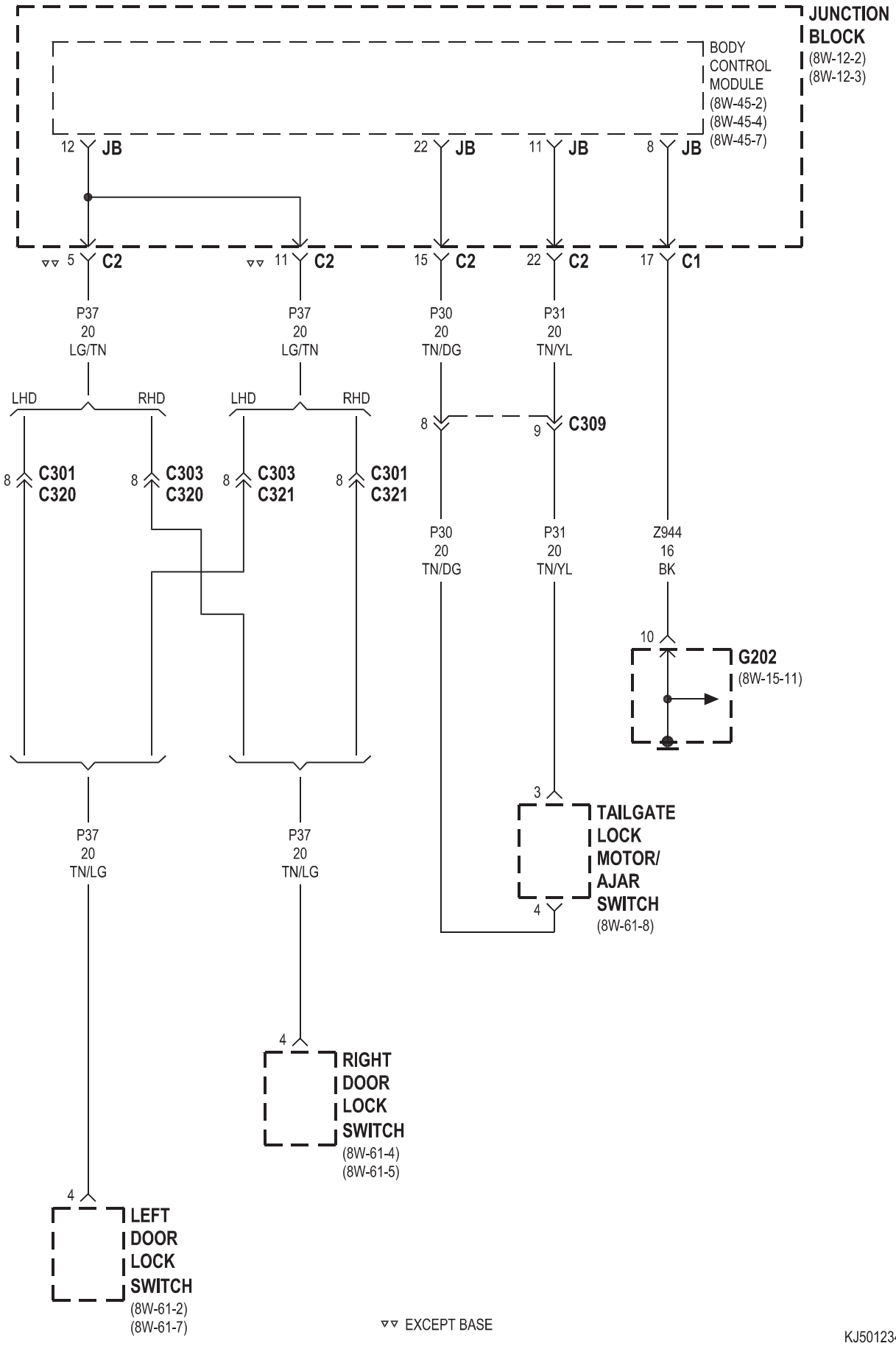
JUNCTION BLOCK
(8W-12-2)
(8W-12-3)
BODY CONTROL MODULE
(8W-45-2)
(8W-45-4)
(8W-45-7)
12 JB
22 JB
11 JB
8 JB
5 C2
11 C2
15 C2
22 C2
17 C1
P37 20 LG/TN
P37 20 LG/TN
P30 20 TN/DG
P31 20 TN/YL
LHD
RHD
LHD
RHD
8 C301 C320
8 C303 C320
8 C303 C321
8 C301 C321
8
9 C309
P30 20 TN/DG
P31 20 TN/YL
Z944 16 BK
10
G202
(8W-15-11)
3
TAILGATE LOCK MOTOR/ AJAR SWITCH
(8W-61-8)
4
P37 20 TN/LG
P37 20 TN/LG
4
RIGHT DOOR LOCK SWITCH
(8W-61-4)
(8W-61-5)
4
LEFT DOOR LOCK SWITCH
(8W-61-2)
(8W-61-7)

▿▿ EXCEPT BASE

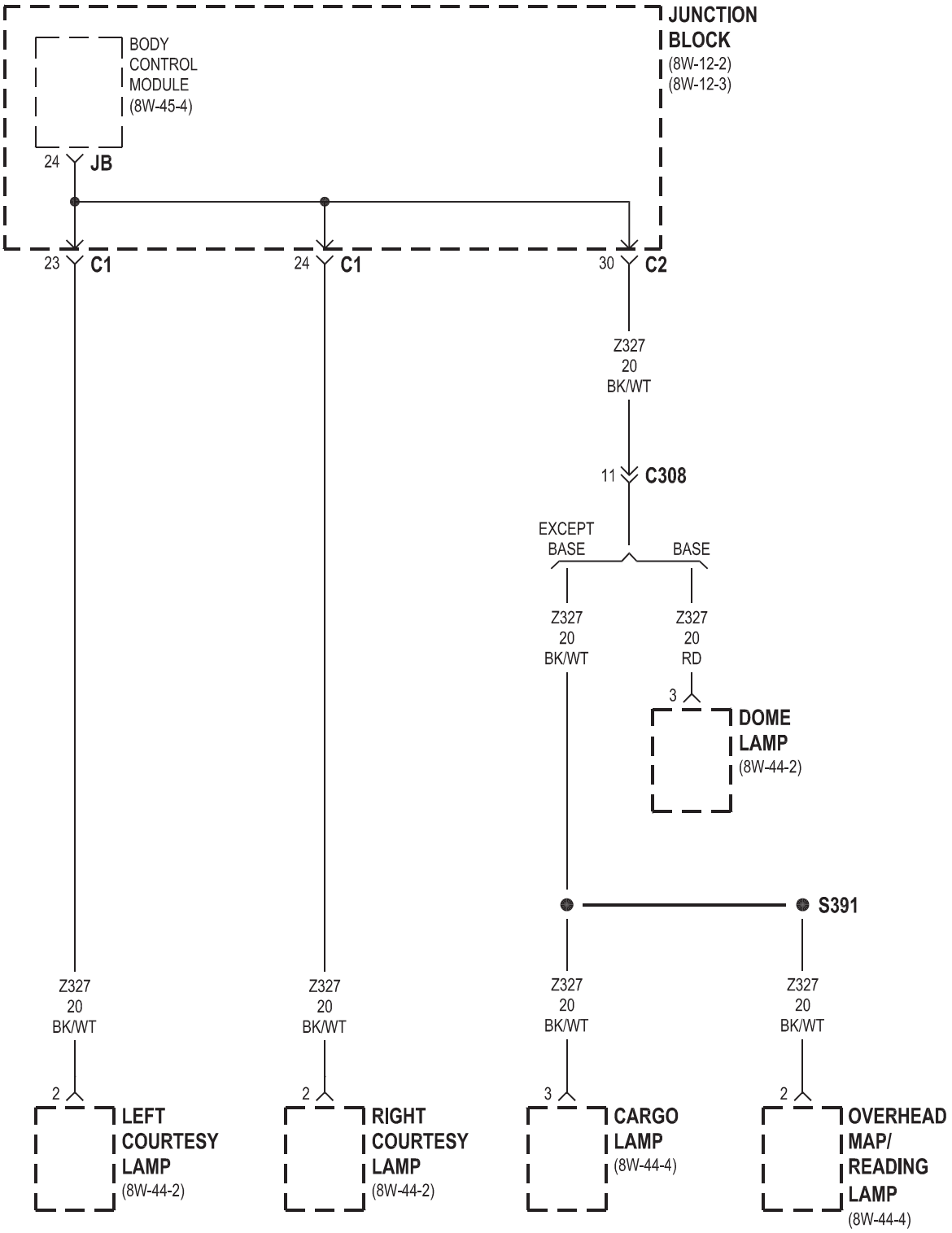
JUNCTION BLOCK
(8W-12-2)
(8W-12-3)
BODY CONTROL MODULE
(8W-45-4)
24
JB
23
C1
24
C1
30
C2
Z327
20
BK/WT
11
C308
EXCEPT BASE
BASE
Z327
20
BK/WT
Z327
20
RD
3
DOME LAMP
(8W-44-2)
S391
Z327
20
BK/WT
Z327
20
BK/WT
Z327
20
BK/WT
Z327
20
BK/WT
2
LEFT COURTESY LAMP
(8W-44-2)
2
RIGHT COURTESY LAMP
(8W-44-2)
3
CARGO LAMP
(8W-44-4)
2
OVERHEAD MAP/ READING LAMP
(8W-44-4)

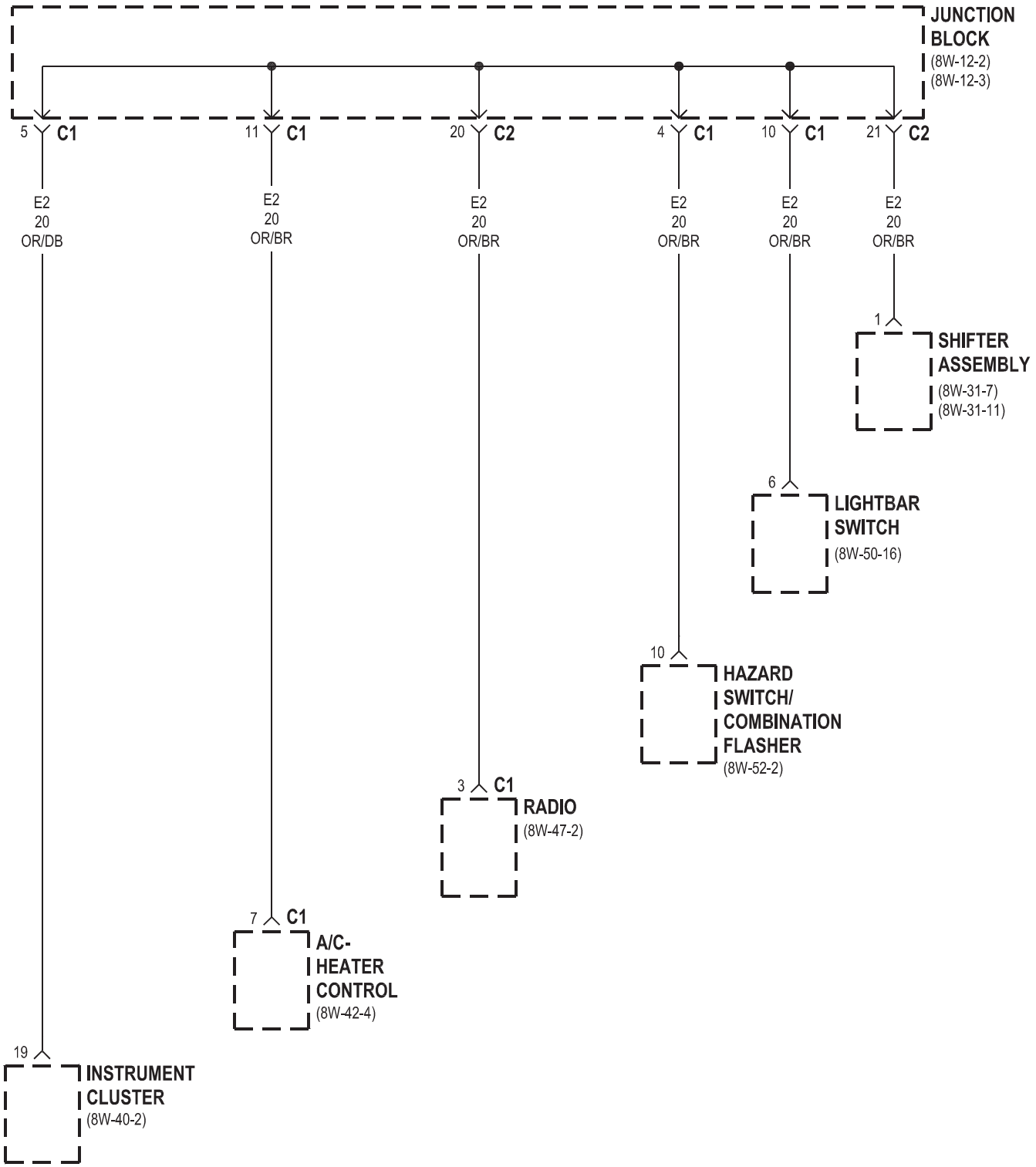
JUNCTION BLOCK
(8W-12-2)
(8W-12-3)
5 C1
11 C1
20 C2
4 C1
10 C1
21 C2
E2 20 OR/DB
E2 20 OR/BR
E2 20 OR/BR
E2 20 OR/BR
E2 20 OR/BR
E2 20 OR/BR
1
SHIFTER ASSEMBLY
(8W-31-7)
(8W-31-11)
6
LIGHTBAR SWITCH
(8W-50-16)
10
HAZARD SWITCH/ COMBINATION FLASHER
(8W-52-2)
3 C1
RADIO
(8W-47-2)
7 C1
A/C- HEATER CONTROL
(8W-42-4)
19
INSTRUMENT CLUSTER
(8W-40-2)

8W-15 GROUND DISTRIBUTION

Component	Page
A/C Compressor Clutch	8W-15-8
A/C Low Pressure Switch	8W-15-5, 6
A/C-Heater Control	8W-15-10, 11
Airbag Control Module	8W-15-15
Anti-Lock Brake Module	8W-15-2, 3
Automatic Day/Night Mirror	8W-15-16
Battery	8W-15-2, 3
Blend Door Actuator	8W-15-11
Blower Motor Relay	8W-15-6
Body Control Module	8W-15-11
Brake Lamp Switch	8W-15-11
Cabin Heater	8W-15-8
Cargo Lamp	8W-15-20
Center High Mounted Stop Lamp	8W-15-16
Cigar Lighter	8W-15-11
Clutch Interlock/Upstop Switch	8W-15-11
Compass Mini-Trip Computer	8W-15-16
Data Link Connector	8W-15-2, 3
Dome Lamp	8W-15-20
Driver Door Lock Motor/Ajar Switch	8W-15-13, 14
Driver Power Mirror	8W-15-14
EGR Air Flow Control	8W-15-3
Engine Control Module	8W-15-3
Engine Coolant Level Sensor	8W-15-8
Flip-Up Glass Release Motor	8W-15-16
Front Control Module	8W-15-6
Front Wiper Motor	8W-15-5
Fuel Heater	8W-15-8
Fuel Pump Module	8W-15-19
G100	8W-15-2, 3, 4
G102	8W-15-4
G103	8W-15-7, 8
G105	8W-15-2, 3
G106	8W-15-2, 3
G110	8W-15-2, 3
G111	8W-15-5, 6
G112	8W-15-5
G113	8W-15-21
G200	8W-15-9, 10
G202	8W-15-11
G300	8W-15-14, 15
G301	8W-15-12, 15
G302	8W-15-13, 15
G303	8W-15-16
G304	8W-15-16, 17, 18
G350	8W-15-19
Generator	8W-15-6
Glow Plug Module	8W-15-4
Hands Free Module	8W-15-15
Hazard Switch/Combination Flasher	8W-15-11
Headlamp Leveling Switch	8W-15-11
Heated Seat Module	8W-15-12
High Note Horn	8W-15-5
Hood Ajar Switch	8W-15-6
Ignition Switch	8W-15-11
Instrument Cluster	8W-15-11
Intrusion Transceiver Module	8W-15-11
Junction Block	8W-15-11, 20
Left Courtesy Lamp	8W-15-20
Left Door Lock Switch	8W-15-14
Left Fog Lamp	8W-15-5
Left Front Door Speaker	8W-15-10
Left Front Park/Turn Signal Lamp	8W-15-5
Left Headlamp	8W-15-5
Left Heated Seat Assembly	8W-15-12
Left Heated Seat Switch	8W-15-12
Left Leveling Motor	8W-15-5
Left Power Seat Switch	8W-15-12
Left Rear Door Lock Motor/Ajar Switch	8W-15-14
Left Tail/Stop Lamp	8W-15-18
License Lamp	8W-15-16, 18
Liftgate Glass	8W-15-16
Lightbar Lamp No. 1	8W-15-9
Lightbar Lamp No. 2	8W-15-9
Lightbar Lamp No. 4	8W-15-9
Lightbar Switch	8W-15-11
Line Pressure Sensor	8W-15-4
Multi-Function Switch	8W-15-11
Natural Vacuum Leak Detection Pump	8W-15-19
Occupant Classification Module	8W-15-15
Overhead Map/Reading Lamp	8W-15-20
Oxygen Sensor 1/1 Upstream	8W-15-7, 8
Oxygen Sensor 1/2 Downstream	8W-15-7, 8
Oxygen Sensor 2/1 Upstream	8W-15-7
Oxygen Sensor 2/2 Downstream	8W-15-7
Passenger Door Lock Motor/Ajar Switch	8W-15-13, 14
Passenger Power Mirror	8W-15-13
Power Distribution Center	8W-15-6
Power Mirror Switch	8W-15-13, 14
Power Steering Pressure Switch	8W-15-8
Power Window Master Switch	8W-15-12
Powertrain Control Module	8W-15-2, 4
Radiator Fan Motor	8W-15-5
Radio	8W-15-10
Radio Choke	8W-15-15
Rear Power Outlet	8W-15-18
Rear Wiper Motor	8W-15-16
Red Brake Warning Indicator Switch	8W-15-6
Right Courtesy Lamp	8W-15-20
Right Door Lock Switch	8W-15-13
Right Fog Lamp	8W-15-6
Right Front Door Speaker	8W-15-10
Right Front Park/Turn Signal Lamp	8W-15-6
Right Headlamp	8W-15-6
Right Heated Seat Assembly	8W-15-12
Right Heated Seat Switch	8W-15-12
Right Leveling Motor	8W-15-6
Right Power Seat Switch	8W-15-12
Right Rear Door Lock Motor/Ajar Switch	8W-15-13
Right Tail/Stop Lamp	8W-15-18
Sentry Key Remote Entry Module	8W-15-11
Shifter Assembly	8W-15-15
Siren	8W-15-6
Speed Control Servo	8W-15-5
Sunroof Motor	8W-15-15, 16
Tailgate Flip-Up Ajar Switch	8W-15-16
Trailer Tow Brake Lamp Relay	8W-15-17
Trailer Tow Connector	8W-15-17
Trailer Tow Left Turn Relay	8W-15-17
Trailer Tow Relay	8W-15-17
Trailer Tow Right Turn Relay	8W-15-17
Transmission Control Module	8W-15-4
Transmission Control Relay	8W-15-6
Transponder-Tire Pressure-Left Front	8W-15-21
Transponder-Tire Pressure-Right Front	8W-15-21
Transponder-Tire Pressure-Right Rear	8W-15-18
Washer Fluid Level Switch	8W-15-5

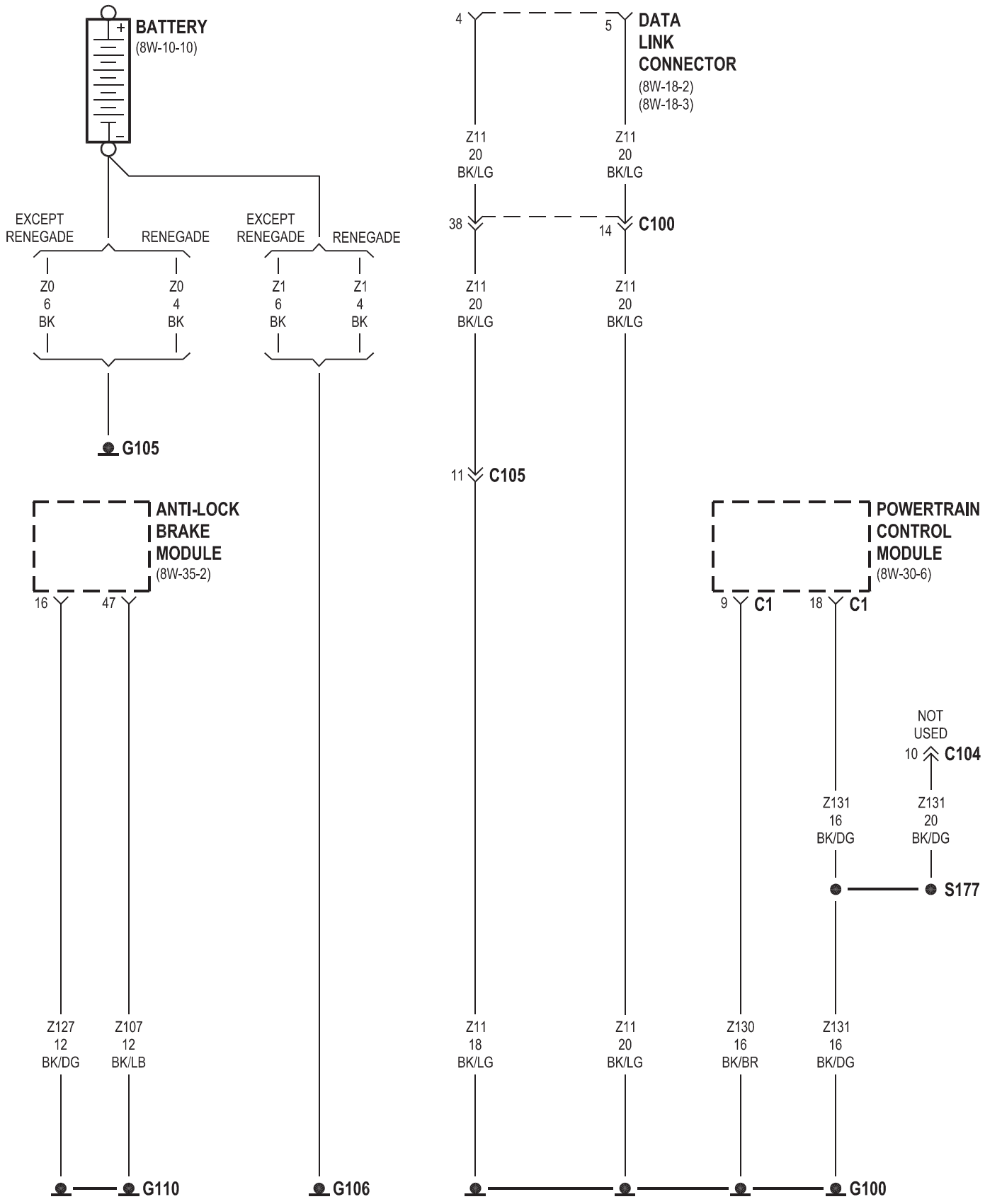
BATTERY
(8W-10-10)
EXCEPT RENEGADE
RENEGADE
EXCEPT RENEGADE
RENEGADE
Z0 6 BK
Z0 4 BK
Z1 6 BK
Z1 4 BK
G105
4
5
DATA LINK CONNECTOR
(8W-18-2)
(8W-18-3)
Z11 20 BK/LG
Z11 20 BK/LG
38
14
C100
Z11 20 BK/LG
Z11 20 BK/LG
11
C105
ANTI-LOCK BRAKE MODULE
(8W-35-2)
16
47
POWERTRAIN CONTROL MODULE
(8W-30-6)
9
C1
18
C1
NOT USED
10
C104
Z131 16 BK/DG
Z131 20 BK/DG
S177
Z127 12 BK/DG
Z107 12 BK/LB
Z11 18 BK/LG
Z11 20 BK/LG
Z130 16 BK/BR
Z131 16 BK/DG
G110
G106
G100

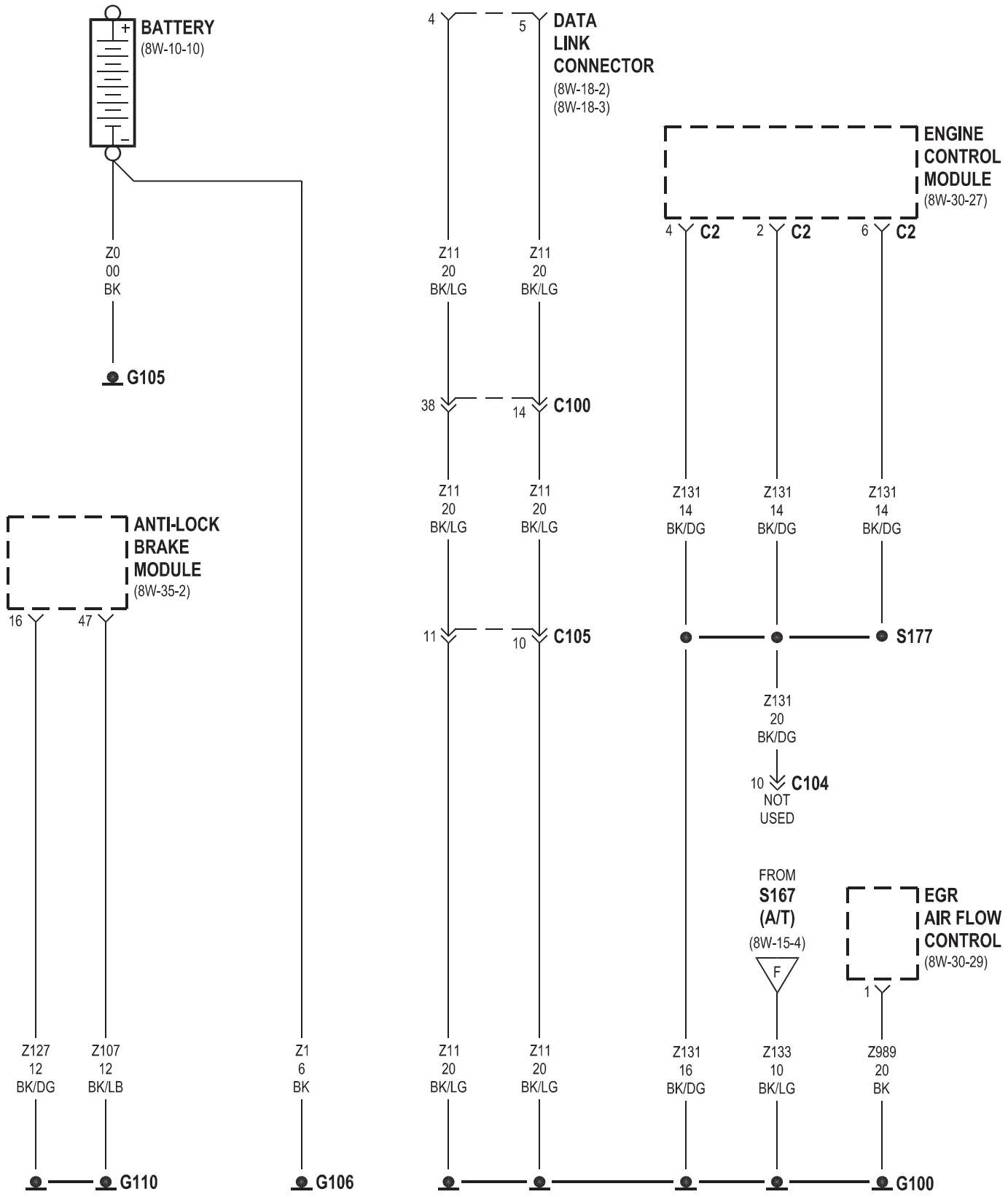
BATTERY
(8W-10-10)
+
–
Z0
00
BK
G105
4
5
DATA
LINK
CONNECTOR
(8W-18-2)
(8W-18-3)
Z11
20
BK/LG
Z11
20
BK/LG
38
14
C100
Z11
20
BK/LG
Z11
20
BK/LG
11
10
C105
ENGINE
CONTROL
MODULE
(8W-30-27)
4
C2
2
C2
6
C2
Z131
14
BK/DG
Z131
14
BK/DG
Z131
14
BK/DG
S177
Z131
20
BK/DG
10
C104
NOT
USED
ANTI-LOCK
BRAKE
MODULE
(8W-35-2)
16
47
FROM
S167
(A/T)
(8W-15-4)
F
EGR
AIR FLOW
CONTROL
(8W-30-29)
1
Z127
12
BK/DG
Z107
12
BK/LB
Z1
6
BK
Z11
20
BK/LG
Z11
20
BK/LG
Z131
16
BK/DG
Z133
10
BK/LG
Z989
20
BK
G110
G106
G100

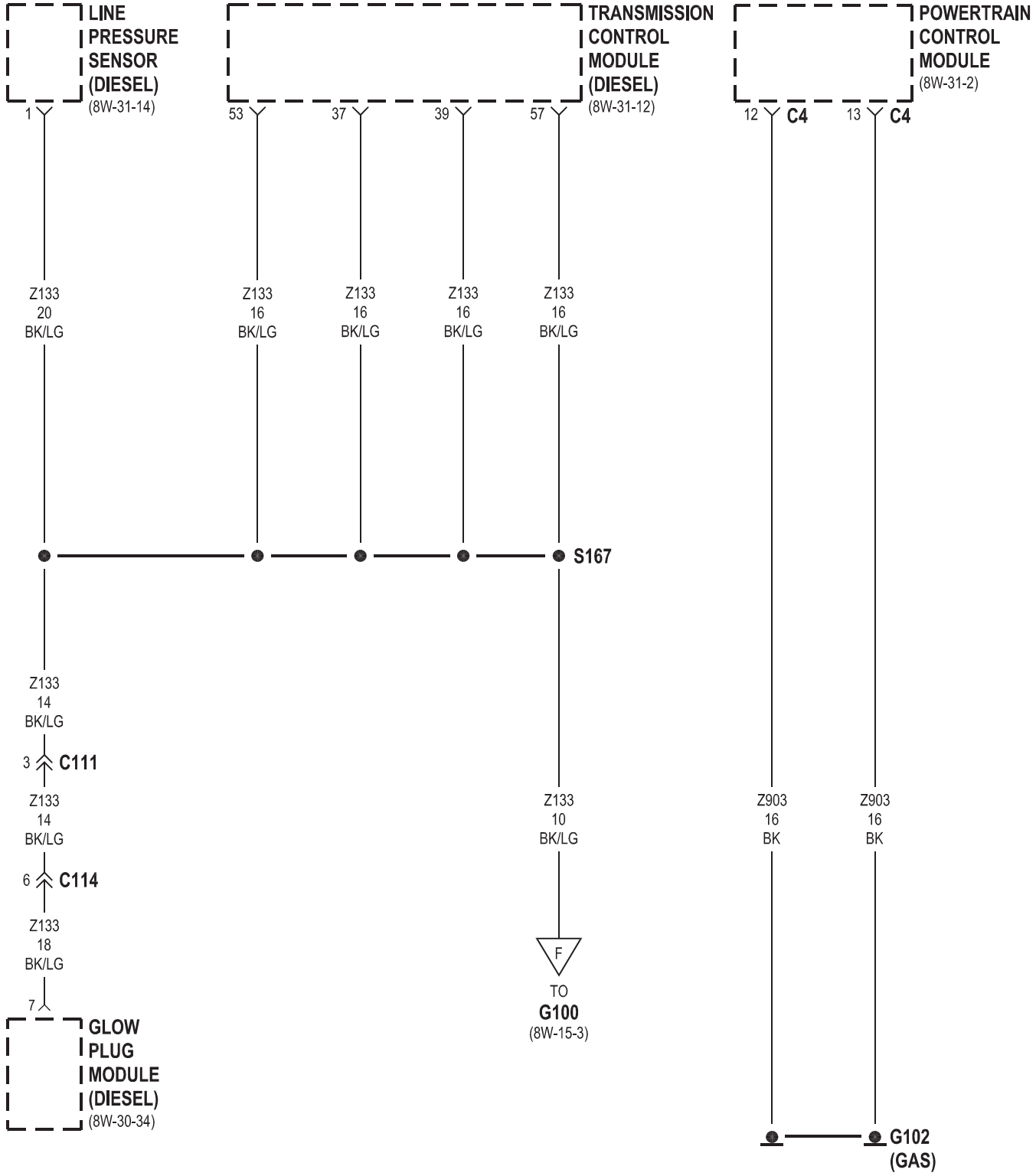
LINE PRESSURE SENSOR (DIESEL)
(8W-31-14)
TRANSMISSION CONTROL MODULE (DIESEL)
(8W-31-12)
POWERTRAIN CONTROL MODULE
(8W-31-2)
1
53
37
39
57
12 C4
13 C4
Z133 20 BK/LG
Z133 16 BK/LG
Z133 16 BK/LG
Z133 16 BK/LG
Z133 16 BK/LG
S167
Z133 14 BK/LG
3 C111
Z133 14 BK/LG
6 C114
Z133 18 BK/LG
7
GLOW PLUG MODULE (DIESEL)
(8W-30-34)
Z133 10 BK/LG
F
TO
G100
(8W-15-3)
Z903 16 BK
Z903 16 BK
G102
(GAS)

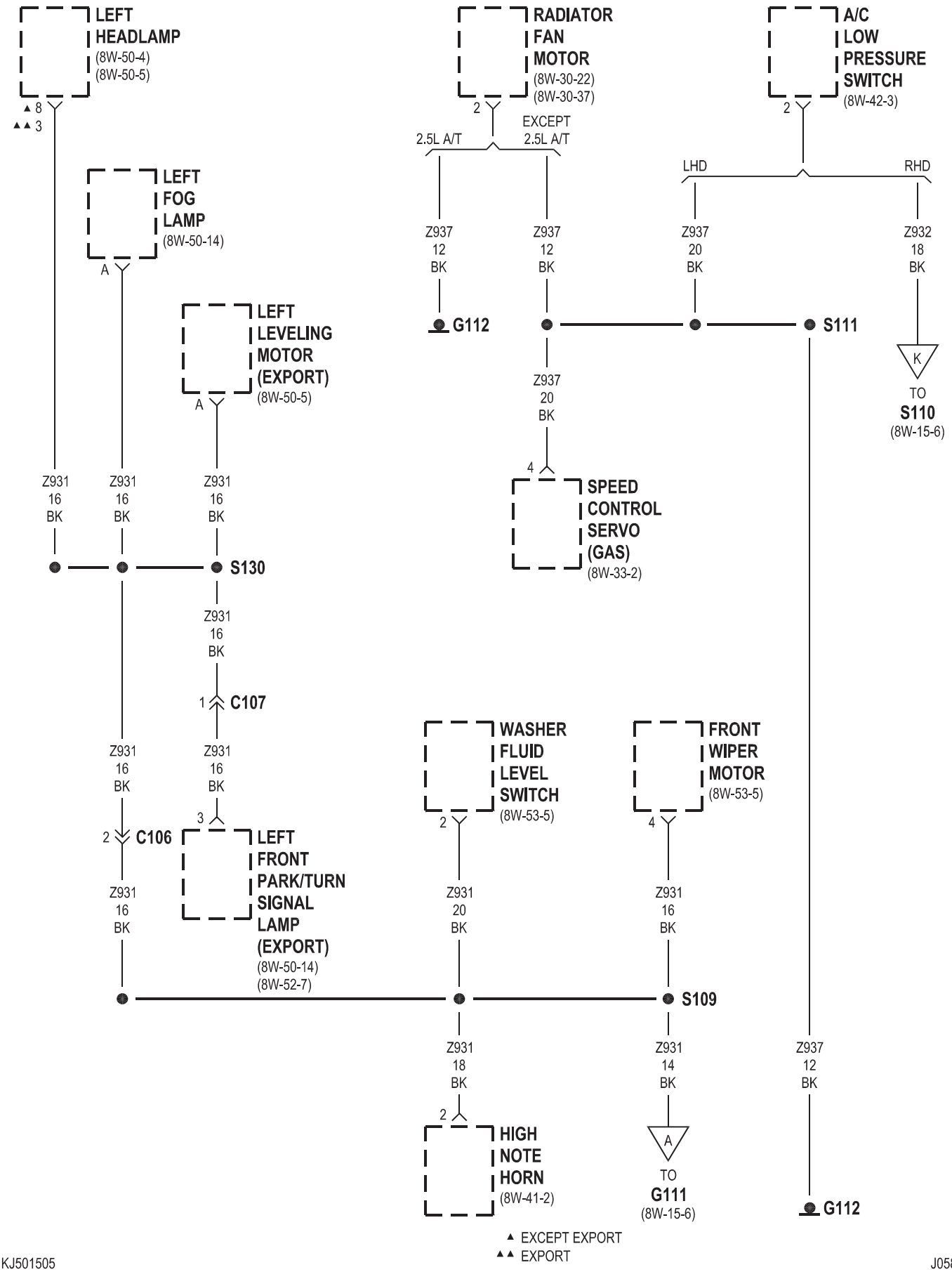
LEFT HEADLAMP
(8W-50-4)
(8W-50-5)
▲ 8
▲▲ 3
LEFT FOG LAMP
(8W-50-14)
A
LEFT LEVELING MOTOR (EXPORT)
(8W-50-5)
A
Z931 16 BK
Z931 16 BK
Z931 16 BK
S130
Z931 16 BK
1
C107
Z931 16 BK
Z931 16 BK
3
2
C106
LEFT FRONT PARK/TURN SIGNAL LAMP (EXPORT)
(8W-50-14)
(8W-52-7)
Z931 16 BK
RADIATOR FAN MOTOR
(8W-30-22)
(8W-30-37)
2
2.5L A/T
EXCEPT 2.5L A/T
Z937 12 BK
Z937 12 BK
G112
Z937 20 BK
4
SPEED CONTROL SERVO (GAS)
(8W-33-2)
A/C LOW PRESSURE SWITCH
(8W-42-3)
2
LHD
RHD
Z937 20 BK
Z932 18 BK
S111
K
TO
S110
(8W-15-6)
WASHER FLUID LEVEL SWITCH
(8W-53-5)
2
Z931 20 BK
FRONT WIPER MOTOR
(8W-53-5)
4
Z931 16 BK
S109
Z931 18 BK
2
HIGH NOTE HORN
(8W-41-2)
Z931 14 BK
A
TO
G111
(8W-15-6)
Z937 12 BK
G112
▲ EXCEPT EXPORT
▲▲ EXPORT

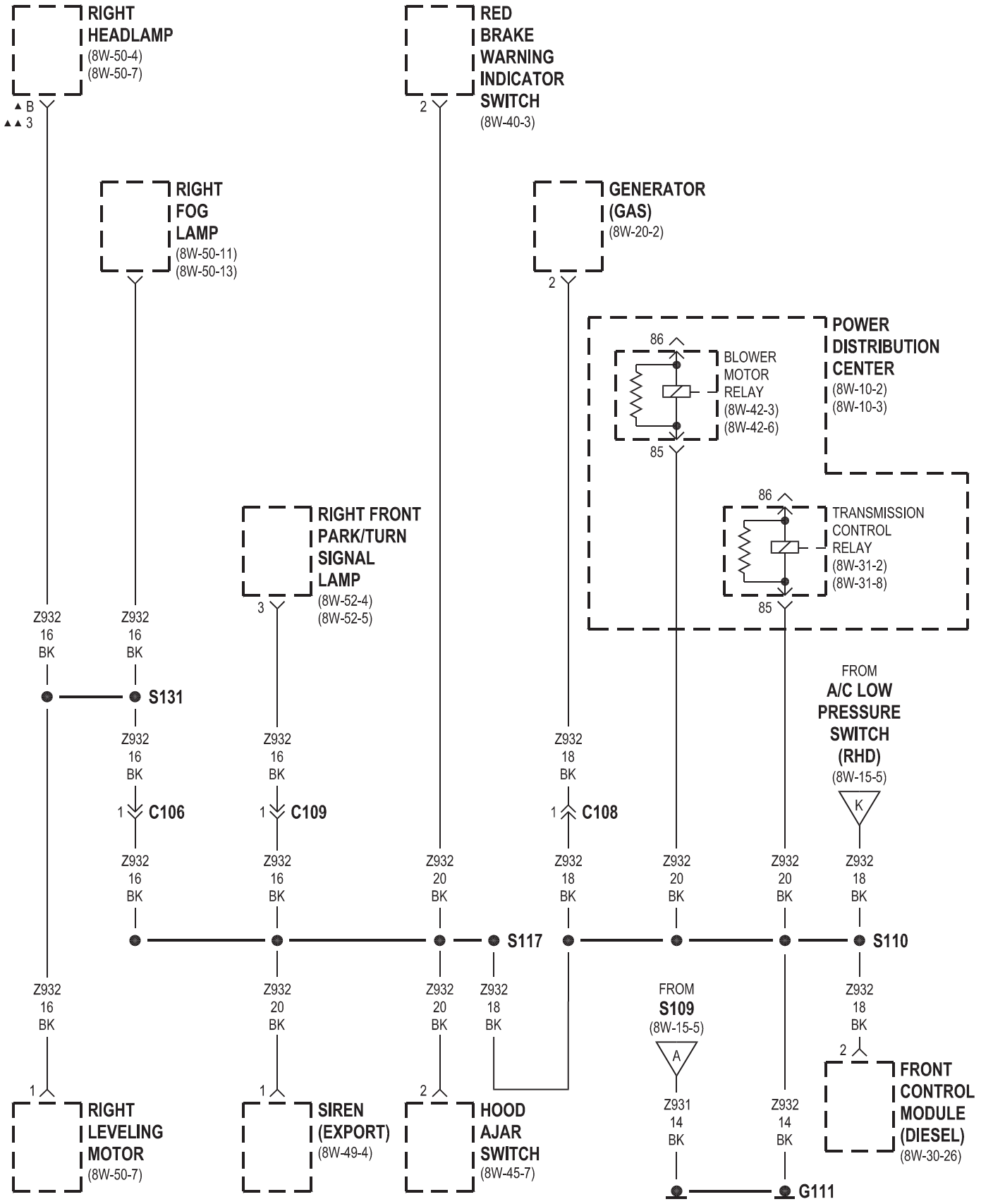

▲ EXCEPT EXPORT
▲▲ EXPORT

3.7L GAS

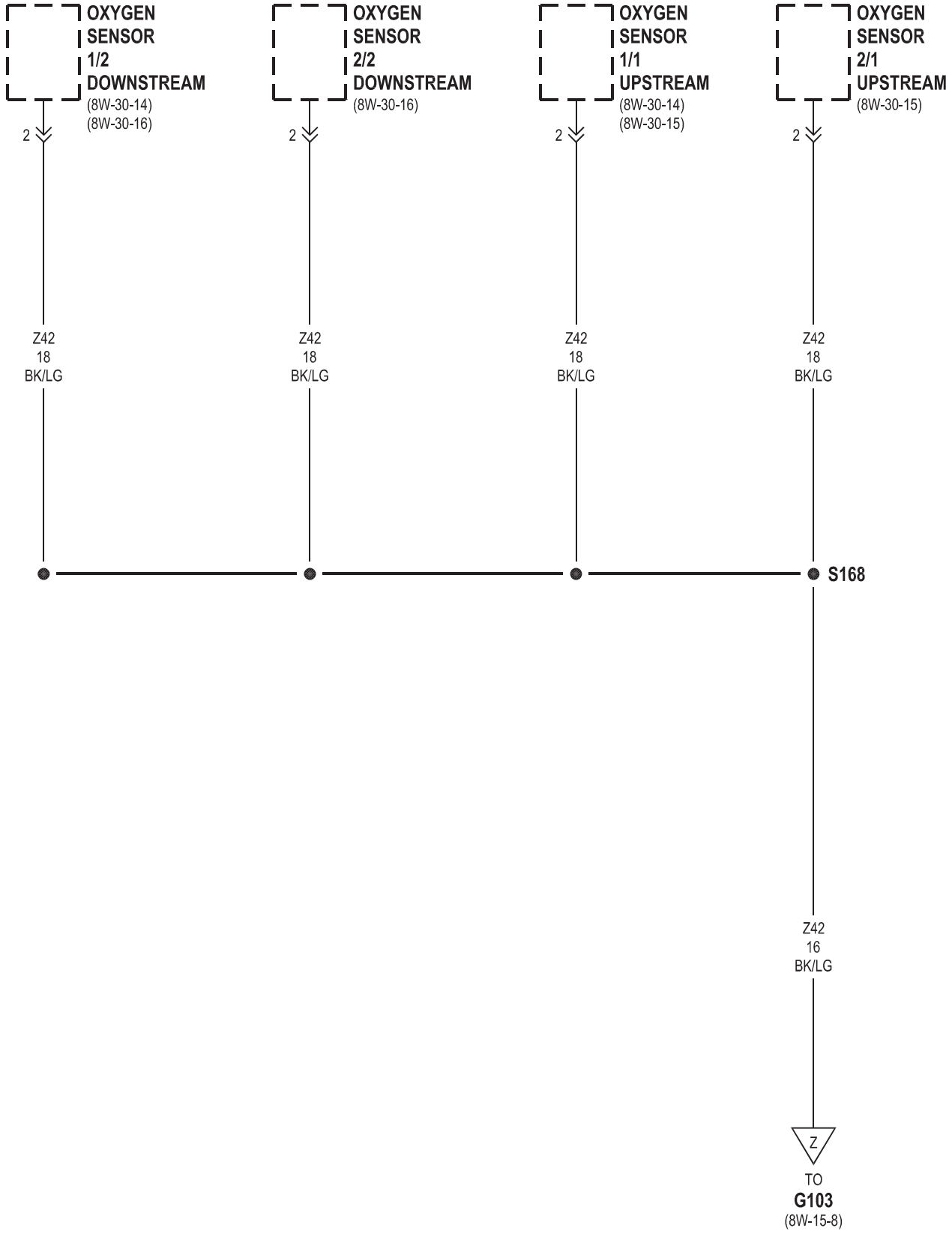
OXYGEN SENSOR 1/2 DOWNSTREAM
(8W-30-14)
(8W-30-16)
OXYGEN SENSOR 2/2 DOWNSTREAM
(8W-30-16)
OXYGEN SENSOR 1/1 UPSTREAM
(8W-30-14)
(8W-30-15)
OXYGEN SENSOR 2/1 UPSTREAM
(8W-30-15)
2
Z42
18
BK/LG
S168
Z42
16
BK/LG
Z
TO
G103
(8W-15-8)

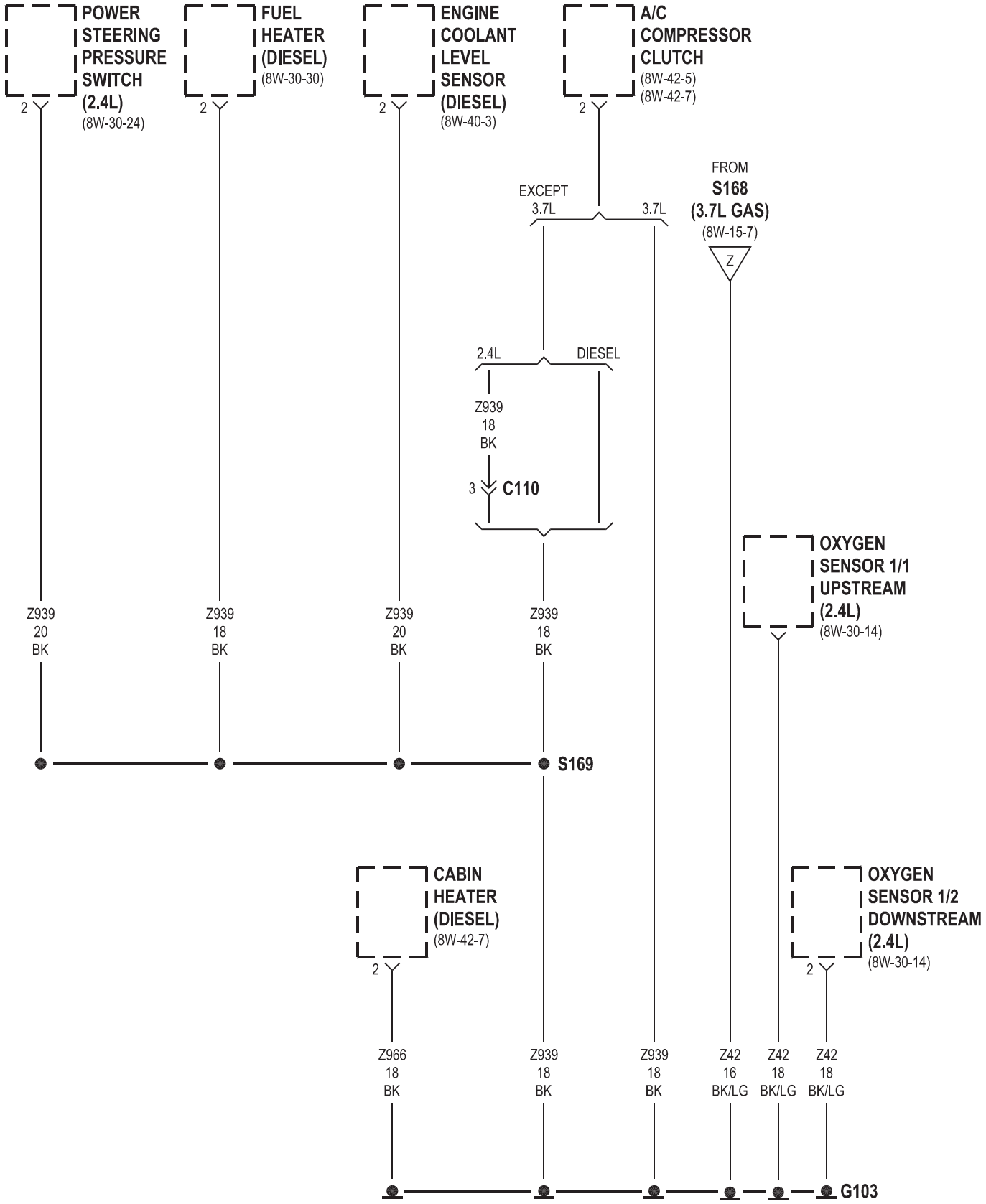
POWER STEERING PRESSURE SWITCH (2.4L)
(8W-30-24)
FUEL HEATER (DIESEL)
(8W-30-30)
ENGINE COOLANT LEVEL SENSOR (DIESEL)
(8W-40-3)
A/C COMPRESSOR CLUTCH
(8W-42-5)
(8W-42-7)
2
EXCEPT 3.7L
3.7L
FROM
S168
(3.7L GAS)
(8W-15-7)
Z
2.4L
DIESEL
Z939
18
BK
3
C110
OXYGEN SENSOR 1/1 UPSTREAM (2.4L)
(8W-30-14)
Z939
20
BK
Z939
18
BK
Z939
20
BK
Z939
18
BK
S169
CABIN HEATER (DIESEL)
(8W-42-7)
OXYGEN SENSOR 1/2 DOWNSTREAM (2.4L)
(8W-30-14)
Z966
18
BK
Z939
18
BK
Z939
18
BK
Z42
16
BK/LG
Z42
18
BK/LG
Z42
18
BK/LG
G103

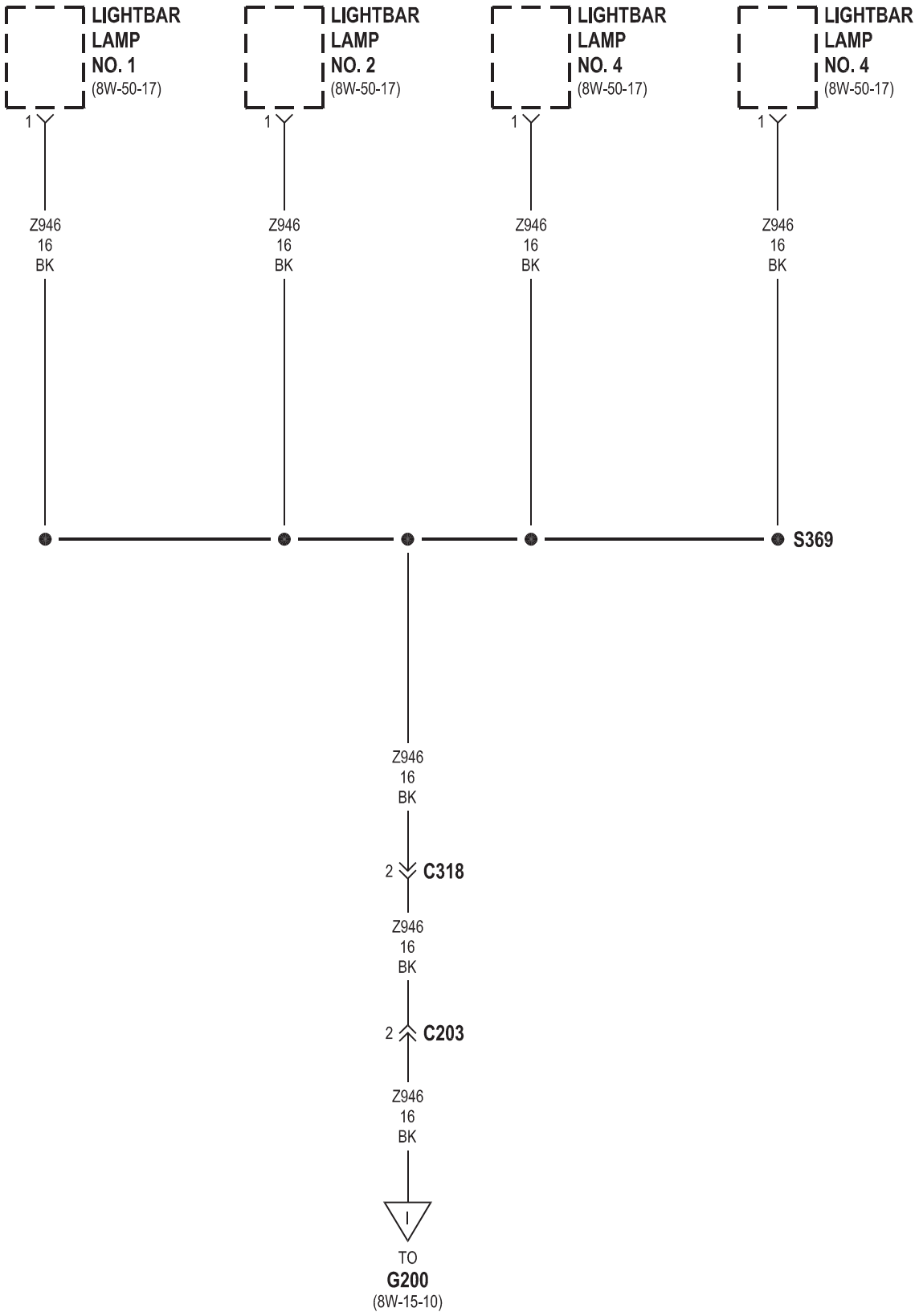
LIGHTBAR LAMP NO. 1 (8W-50-17)
LIGHTBAR LAMP NO. 2 (8W-50-17)
LIGHTBAR LAMP NO. 4 (8W-50-17)
LIGHTBAR LAMP NO. 4 (8W-50-17)
1
Z946 16 BK
S369
2
C318
C203
TO
G200
(8W-15-10)

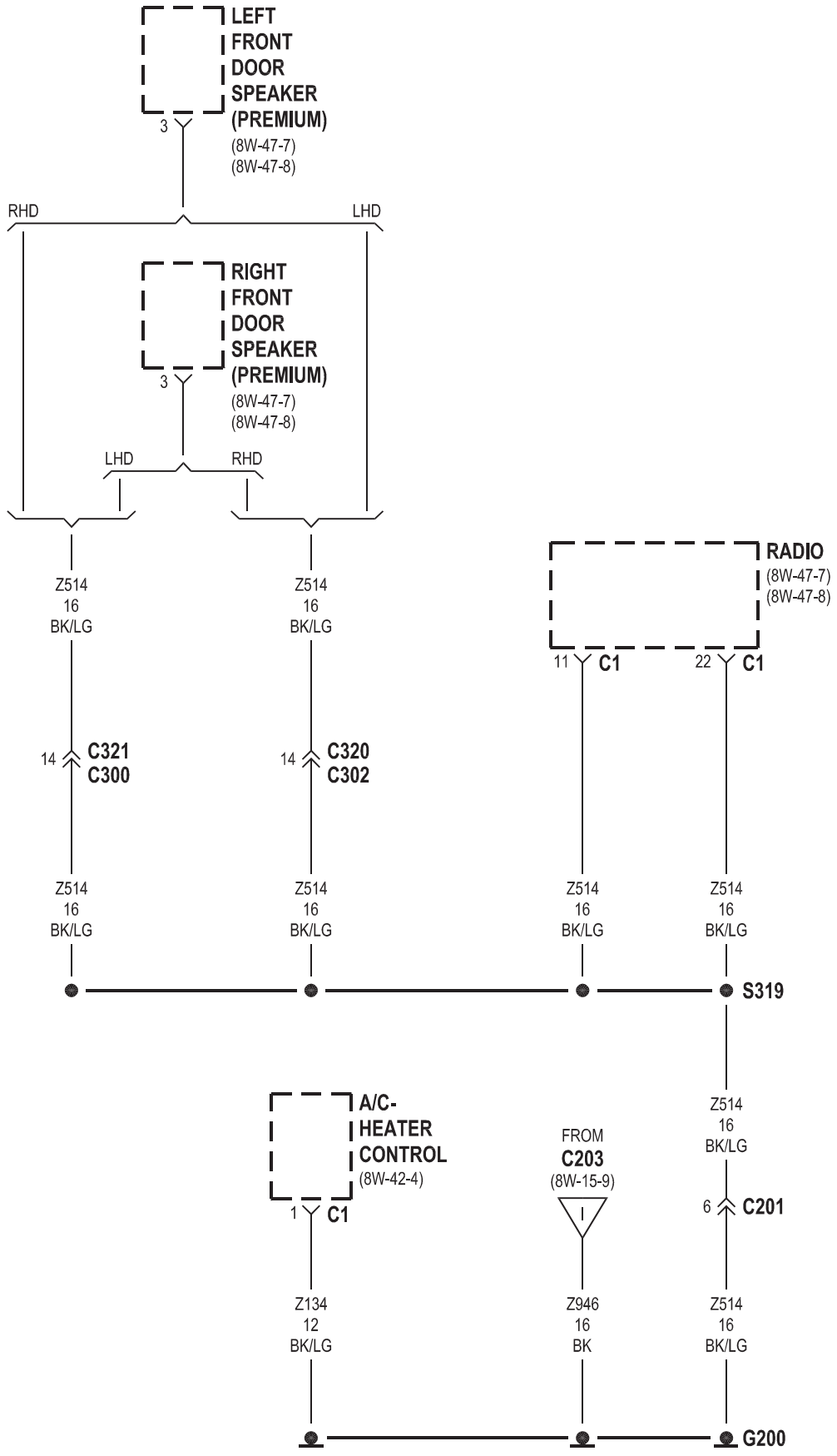
LEFT FRONT DOOR SPEAKER (PREMIUM)
(8W-47-7)
(8W-47-8)
3
RHD
LHD
RIGHT FRONT DOOR SPEAKER (PREMIUM)
(8W-47-7)
(8W-47-8)
3
LHD
RHD
Z514 16 BK/LG
Z514 16 BK/LG
RADIO
(8W-47-7)
(8W-47-8)
11 C1
22 C1
14 C321 C300
14 C320 C302
Z514 16 BK/LG
Z514 16 BK/LG
Z514 16 BK/LG
Z514 16 BK/LG
S319
A/C-HEATER CONTROL
(8W-42-4)
1 C1
FROM C203
(8W-15-9)
Z514 16 BK/LG
6 C201
Z134 12 BK/LG
Z946 16 BK
Z514 16 BK/LG
G200

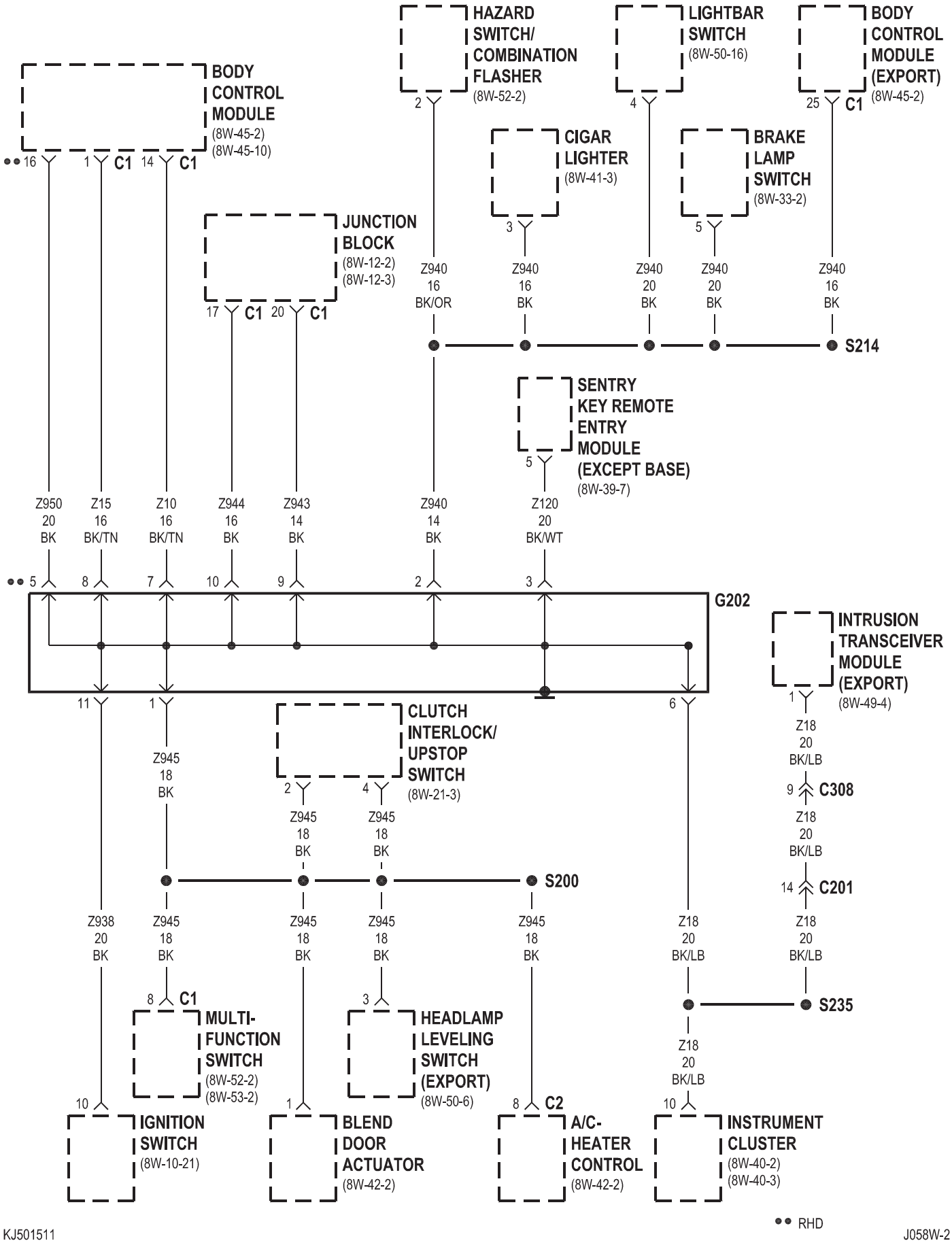
HAZARD SWITCH/ COMBINATION FLASHER (8W-52-2)
LIGHTBAR SWITCH (8W-50-16)
BODY CONTROL MODULE (EXPORT) (8W-45-2)
BODY CONTROL MODULE (8W-45-2) (8W-45-10)
CIGAR LIGHTER (8W-41-3)
BRAKE LAMP SWITCH (8W-33-2)
JUNCTION BLOCK (8W-12-2) (8W-12-3)
Z940 16 BK/OR
Z940 16 BK
Z940 20 BK
Z940 20 BK
Z940 16 BK
S214
SENTRY KEY REMOTE ENTRY MODULE (EXCEPT BASE) (8W-39-7)
Z950 20 BK
Z15 16 BK/TN
Z10 16 BK/TN
Z944 16 BK
Z943 14 BK
Z940 14 BK
Z120 20 BK/WT
G202
INTRUSION TRANSCEIVER MODULE (EXPORT) (8W-49-4)
CLUTCH INTERLOCK/ UPSTOP SWITCH (8W-21-3)
Z945 18 BK
Z18 20 BK/LB
C308
C201
S200
Z938 20 BK
S235
MULTI-FUNCTION SWITCH (8W-52-2) (8W-53-2)
HEADLAMP LEVELING SWITCH (EXPORT) (8W-50-6)
IGNITION SWITCH (8W-10-21)
BLEND DOOR ACTUATOR (8W-42-2)
A/C-HEATER CONTROL (8W-42-2)
INSTRUMENT CLUSTER (8W-40-2) (8W-40-3)
RHD

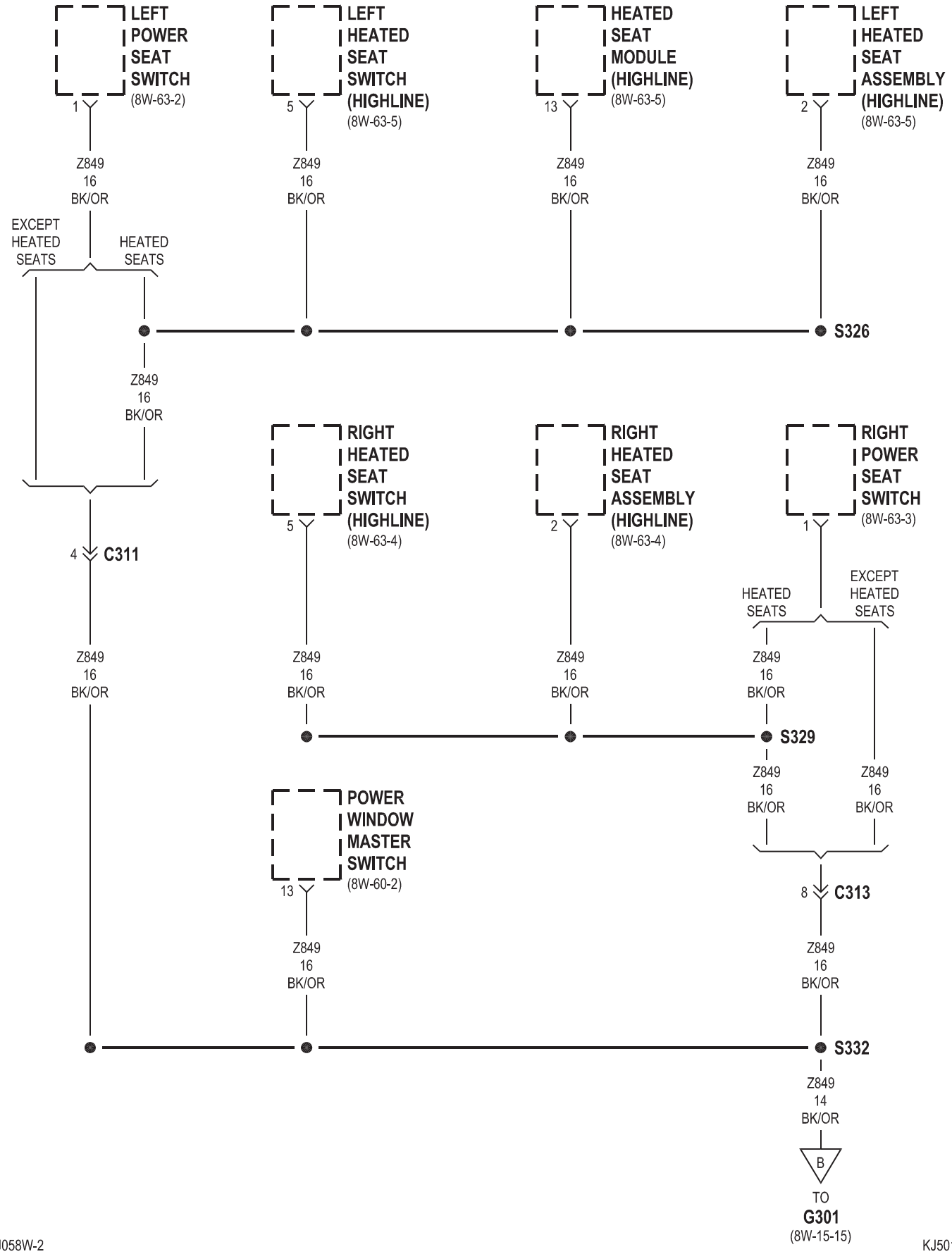
LEFT POWER SEAT SWITCH (8W-63-2)
1
Z849 16 BK/OR
LEFT HEATED SEAT SWITCH (HIGHLINE) (8W-63-5)
5
Z849 16 BK/OR
HEATED SEAT MODULE (HIGHLINE) (8W-63-5)
13
Z849 16 BK/OR
LEFT HEATED SEAT ASSEMBLY (HIGHLINE) (8W-63-5)
2
Z849 16 BK/OR
EXCEPT HEATED SEATS
HEATED SEATS
S326
Z849 16 BK/OR
RIGHT HEATED SEAT SWITCH (HIGHLINE) (8W-63-4)
5
Z849 16 BK/OR
RIGHT HEATED SEAT ASSEMBLY (HIGHLINE) (8W-63-4)
2
Z849 16 BK/OR
RIGHT POWER SEAT SWITCH (8W-63-3)
1
HEATED SEATS
EXCEPT HEATED SEATS
Z849 16 BK/OR
Z849 16 BK/OR
4
C311
Z849 16 BK/OR
S329
Z849 16 BK/OR
Z849 16 BK/OR
POWER WINDOW MASTER SWITCH (8W-60-2)
13
Z849 16 BK/OR
8
C313
Z849 16 BK/OR
S332
Z849 14 BK/OR
B
TO
G301
(8W-15-15)

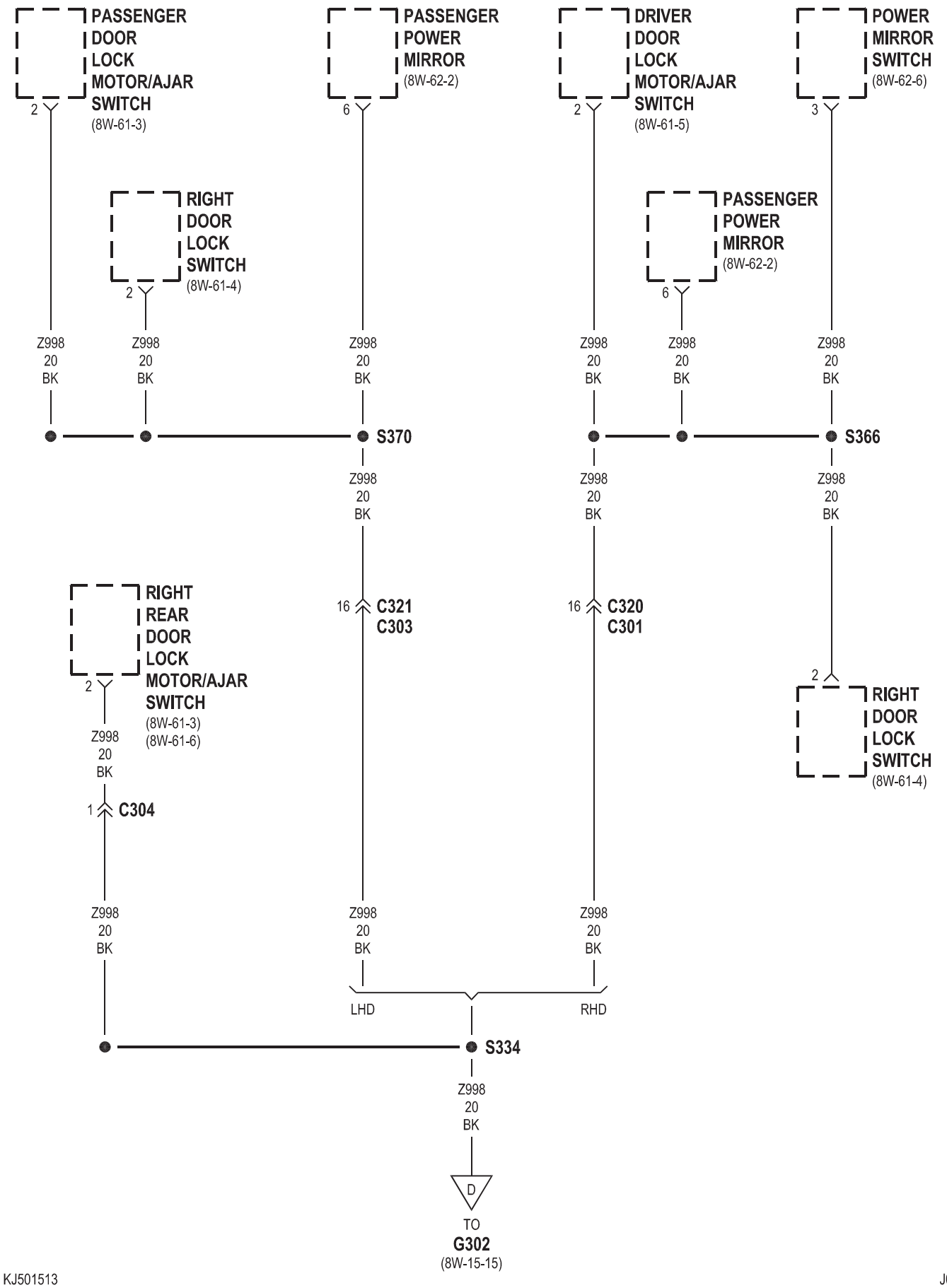
PASSENGER DOOR LOCK MOTOR/AJAR SWITCH (8W-61-3)
2
PASSENGER POWER MIRROR (8W-62-2)
6
DRIVER DOOR LOCK MOTOR/AJAR SWITCH (8W-61-5)
2
POWER MIRROR SWITCH (8W-62-6)
3
RIGHT DOOR LOCK SWITCH (8W-61-4)
2
PASSENGER POWER MIRROR (8W-62-2)
6
Z998 20 BK
S370
S366
16
C321
C303
C320
C301
RIGHT REAR DOOR LOCK MOTOR/AJAR SWITCH (8W-61-3) (8W-61-6)
2
1
C304
RIGHT DOOR LOCK SWITCH (8W-61-4)
LHD
RHD
S334
D
TO
G302
(8W-15-15)

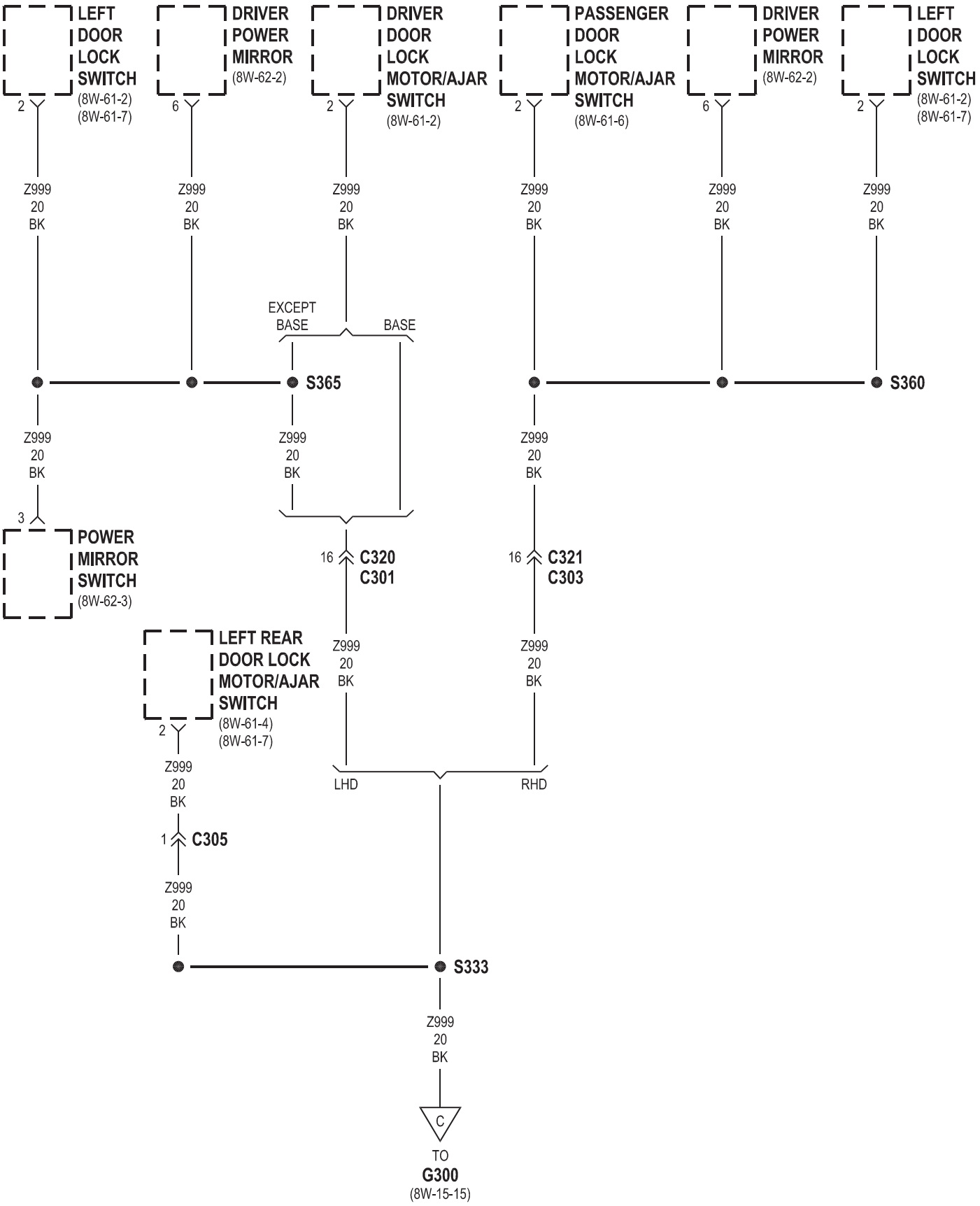
LEFT DOOR LOCK SWITCH
(8W-61-2)
(8W-61-7)
DRIVER POWER MIRROR
(8W-62-2)
DRIVER DOOR LOCK MOTOR/AJAR SWITCH
(8W-61-2)
PASSENGER DOOR LOCK MOTOR/AJAR SWITCH
(8W-61-6)
DRIVER POWER MIRROR
(8W-62-2)
LEFT DOOR LOCK SWITCH
(8W-61-2)
(8W-61-7)
2
6
2
2
6
2
Z999
20
BK
EXCEPT BASE
BASE
S365
S360
3
POWER MIRROR SWITCH
(8W-62-3)
16
C320
C301
16
C321
C303
LEFT REAR DOOR LOCK MOTOR/AJAR SWITCH
(8W-61-4)
(8W-61-7)
LHD
RHD
1
C305
S333
C
TO
G300
(8W-15-15)

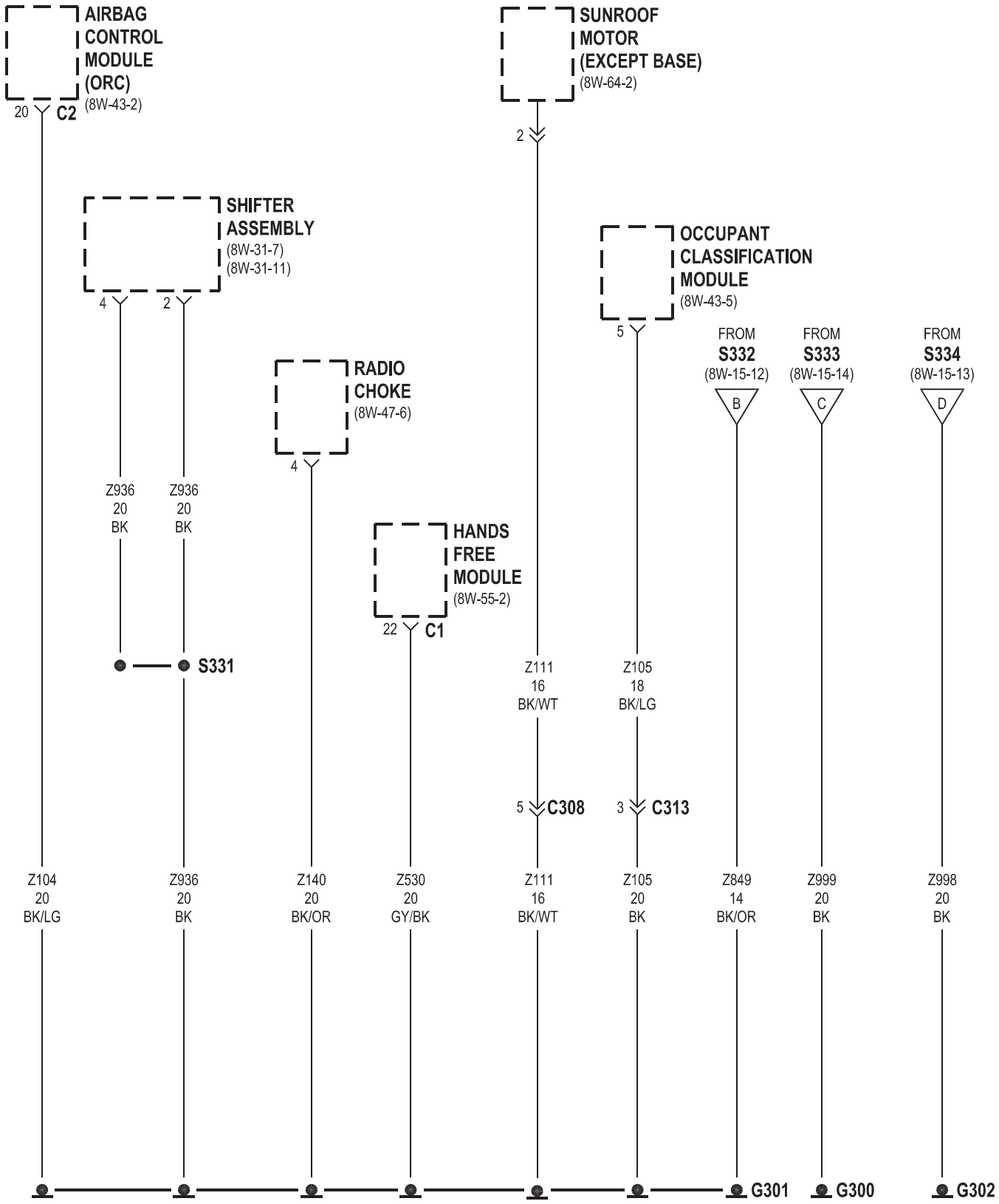
AIRBAG CONTROL MODULE (ORC)
(8W-43-2)
20 C2
SHIFTER ASSEMBLY
(8W-31-7)
(8W-31-11)
4
2
RADIO CHOKE
(8W-47-6)
4
HANDS FREE MODULE
(8W-55-2)
22 C1
SUNROOF MOTOR (EXCEPT BASE)
(8W-64-2)
2
OCCUPANT CLASSIFICATION MODULE
(8W-43-5)
5
FROM S332 (8W-15-12)
B
FROM S333 (8W-15-14)
C
FROM S334 (8W-15-13)
D
Z936 20 BK
Z936 20 BK
S331
Z111 16 BK/WT
Z105 18 BK/LG
5 C308
3 C313
Z104 20 BK/LG
Z936 20 BK
Z140 20 BK/OR
Z530 20 GY/BK
Z111 16 BK/WT
Z105 20 BK
Z849 14 BK/OR
Z999 20 BK
Z998 20 BK
G301
G300
G302

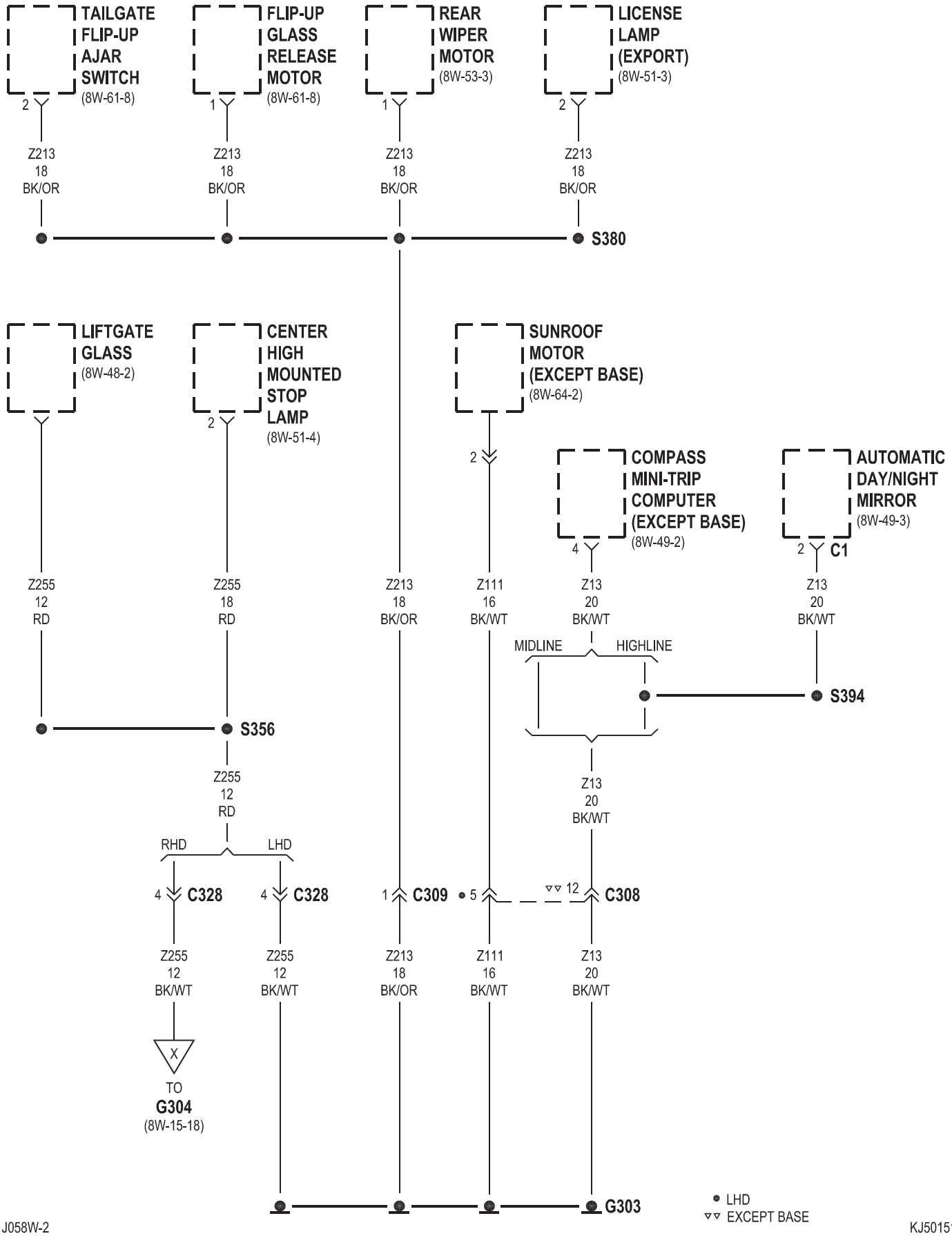
TAILGATE FLIP-UP AJAR SWITCH (8W-61-8)
FLIP-UP GLASS RELEASE MOTOR (8W-61-8)
REAR WIPER MOTOR (8W-53-3)
LICENSE LAMP (EXPORT) (8W-51-3)
2
1
1
2
Z213 18 BK/OR
Z213 18 BK/OR
Z213 18 BK/OR
Z213 18 BK/OR
S380
LIFTGATE GLASS (8W-48-2)
CENTER HIGH MOUNTED STOP LAMP (8W-51-4)
SUNROOF MOTOR (EXCEPT BASE) (8W-64-2)
2
2
COMPASS MINI-TRIP COMPUTER (EXCEPT BASE) (8W-49-2)
AUTOMATIC DAY/NIGHT MIRROR (8W-49-3)
4
2
C1
Z255 12 RD
Z255 18 RD
Z213 18 BK/OR
Z111 16 BK/WT
Z13 20 BK/WT
Z13 20 BK/WT
MIDLINE
HIGHLINE
S394
S356
Z255 12 RD
Z13 20 BK/WT
RHD
LHD
4 C328
4 C328
1 C309
5
12 C308
Z255 12 BK/WT
Z255 12 BK/WT
Z213 18 BK/OR
Z111 16 BK/WT
Z13 20 BK/WT
X
TO
G304
(8W-15-18)
G303
LHD
EXCEPT BASE

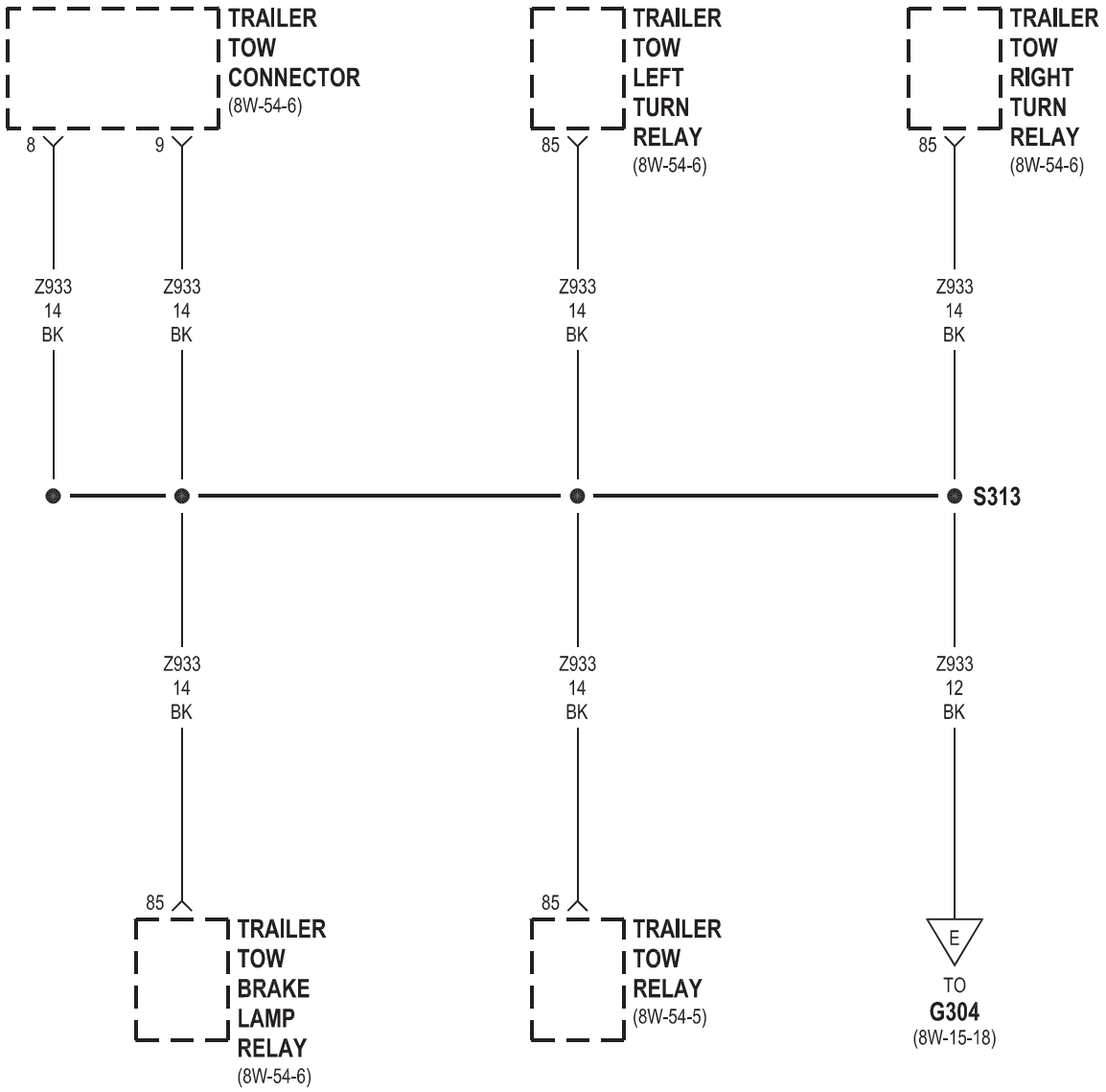
TRAILER TOW CONNECTOR (8W-54-6)
TRAILER TOW LEFT TURN RELAY (8W-54-6)
TRAILER TOW RIGHT TURN RELAY (8W-54-6)
8
9
85
85
Z933 14 BK
Z933 14 BK
Z933 14 BK
Z933 14 BK
S313
Z933 14 BK
Z933 14 BK
Z933 12 BK
85
85
TRAILER TOW BRAKE LAMP RELAY (8W-54-6)
TRAILER TOW RELAY (8W-54-5)
E
TO G304 (8W-15-18)

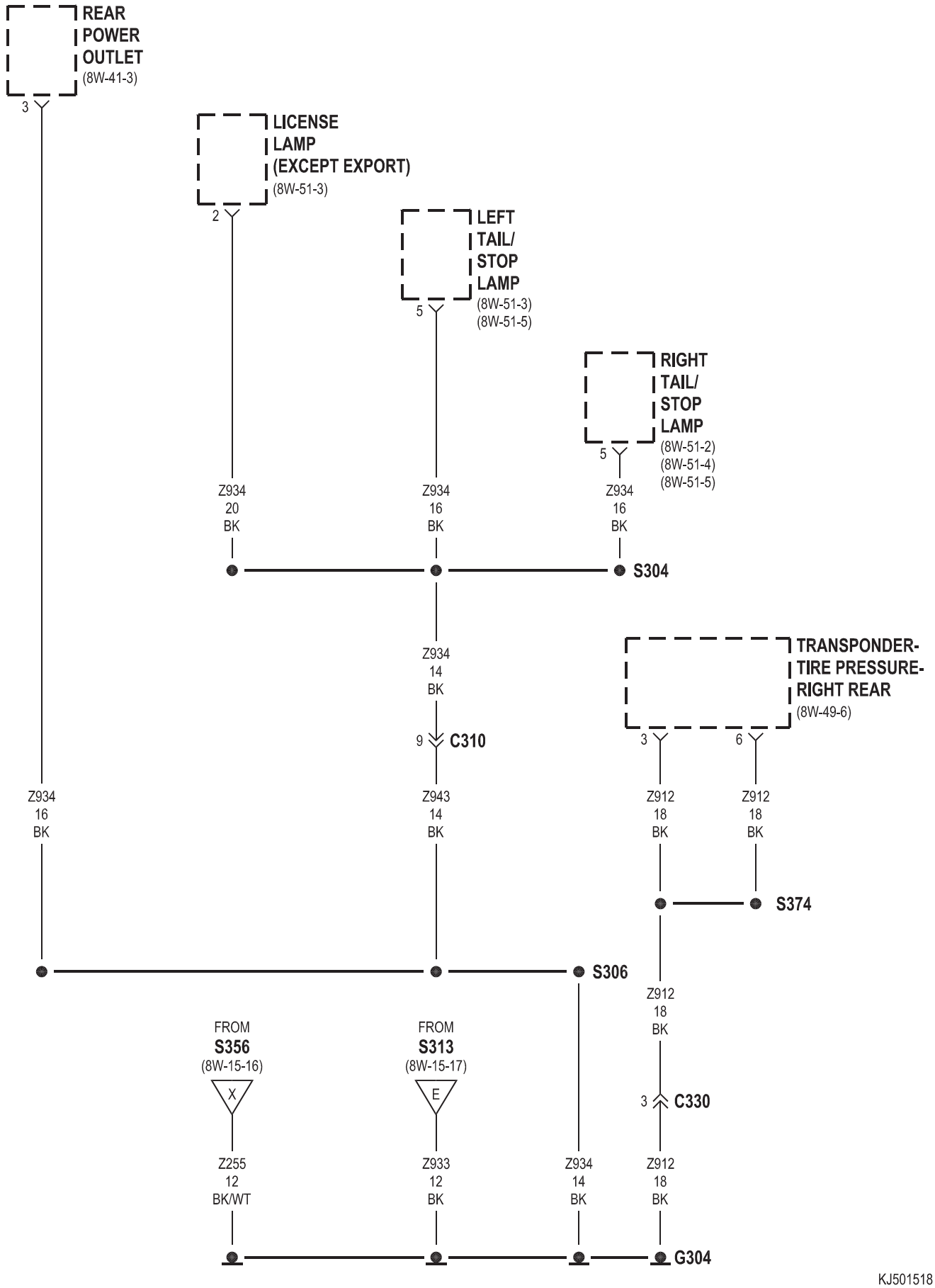
REAR POWER OUTLET
(8W-41-3)
3
LICENSE LAMP (EXCEPT EXPORT)
(8W-51-3)
2
LEFT TAIL/ STOP LAMP
(8W-51-3)
(8W-51-5)
5
RIGHT TAIL/ STOP LAMP
(8W-51-2)
(8W-51-4)
(8W-51-5)
5
Z934 20 BK
Z934 16 BK
Z934 16 BK
S304
Z934 14 BK
9
C310
TRANSPONDER-TIRE PRESSURE-RIGHT REAR
(8W-49-6)
3
6
Z934 16 BK
Z943 14 BK
Z912 18 BK
Z912 18 BK
S374
S306
Z912 18 BK
FROM S356
(8W-15-16)
X
FROM S313
(8W-15-17)
E
3
C330
Z255 12 BK/WT
Z933 12 BK
Z934 14 BK
Z912 18 BK
G304

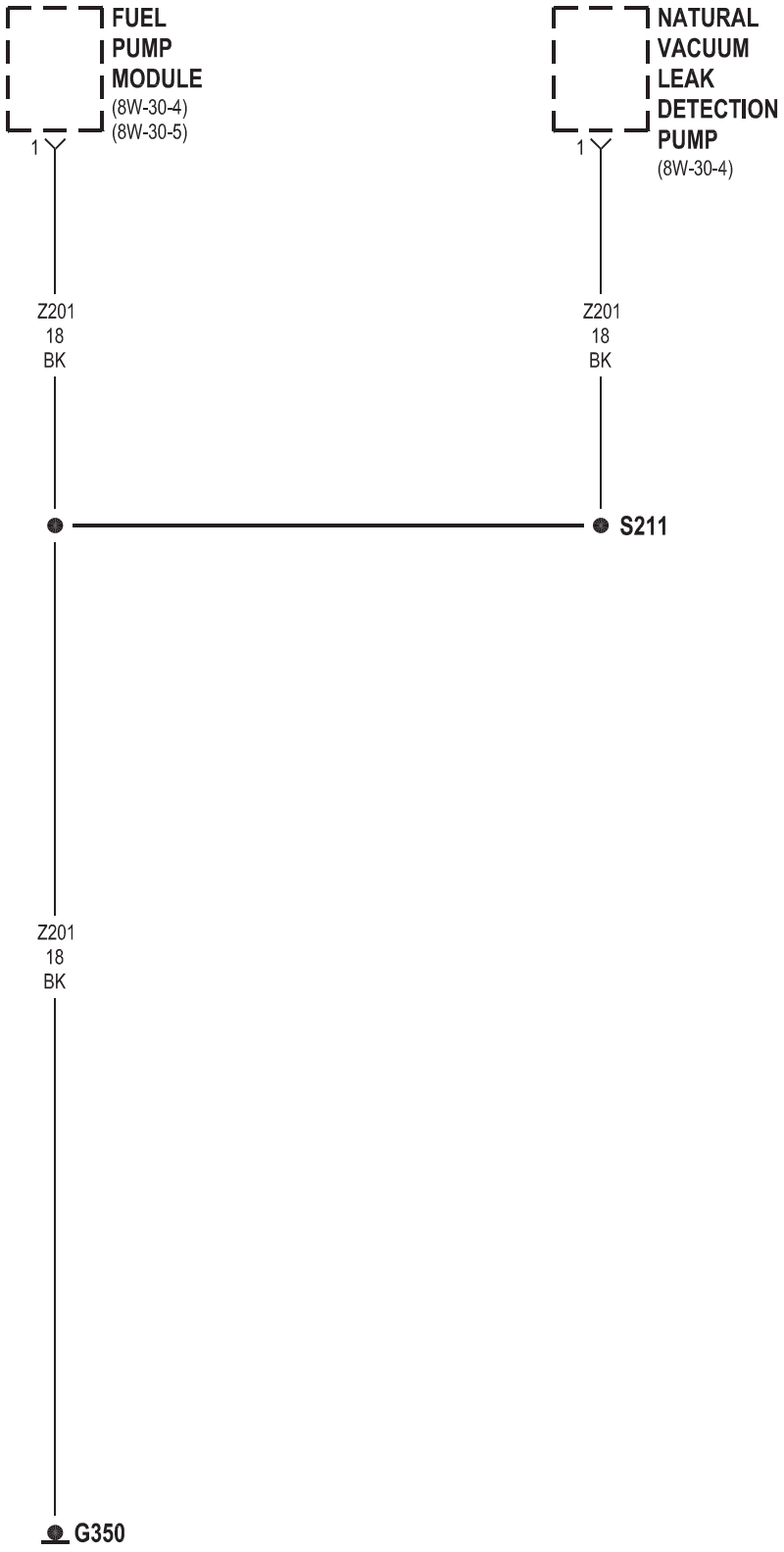
FUEL
PUMP
MODULE
(8W-30-4)
(8W-30-5)
1
NATURAL
VACUUM
LEAK
DETECTION
PUMP
(8W-30-4)
1
Z201
18
BK
Z201
18
BK
S211
Z201
18
BK
G350

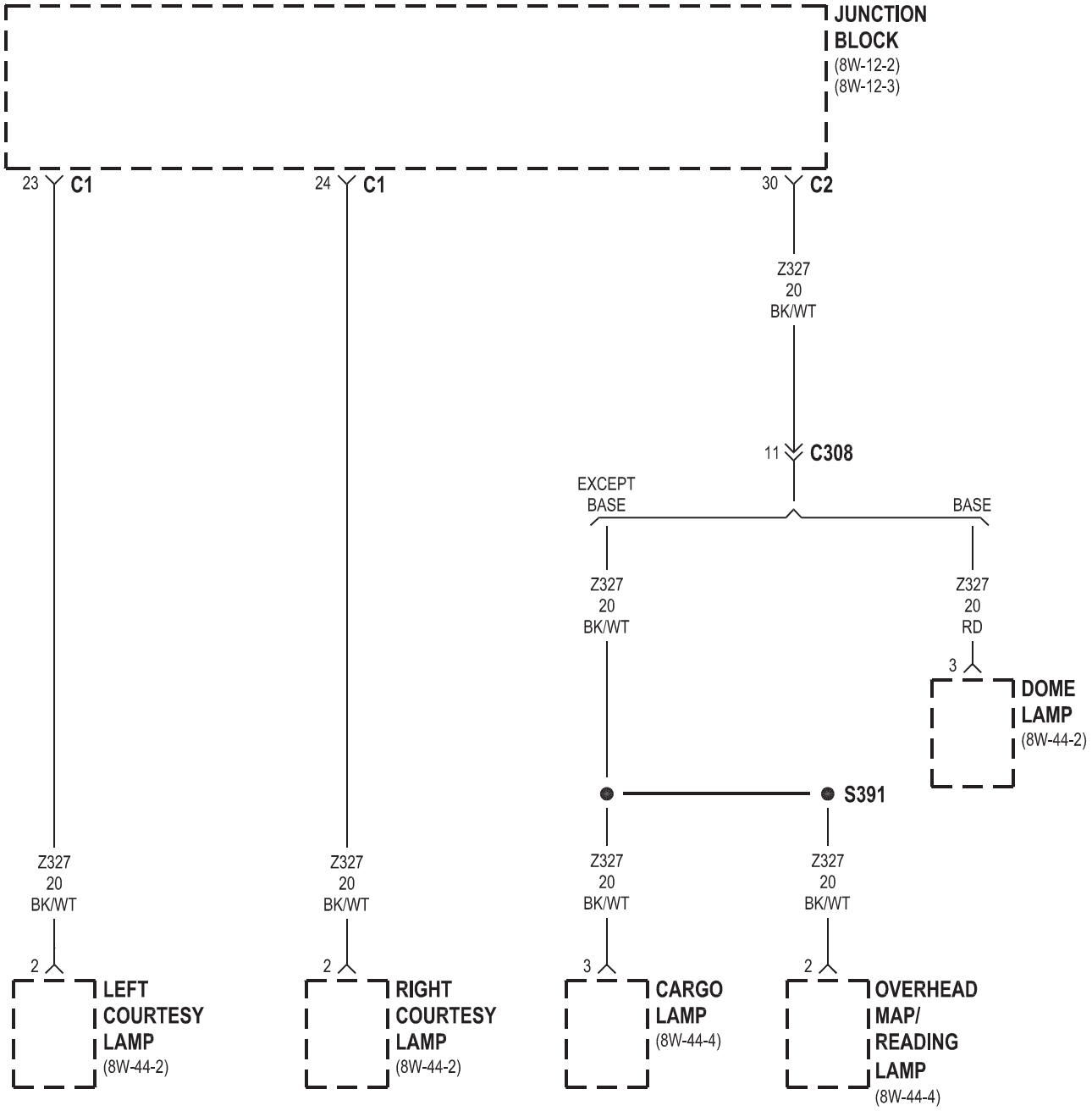
JUNCTION BLOCK
(8W-12-2)
(8W-12-3)
23 C1
24 C1
30 C2
Z327
20
BK/WT
11 C308
EXCEPT BASE
BASE
Z327
20
BK/WT
Z327
20
RD
3
DOME LAMP
(8W-44-2)
S391
Z327
20
BK/WT
Z327
20
BK/WT
Z327
20
BK/WT
Z327
20
BK/WT
2
LEFT COURTESY LAMP
(8W-44-2)
2
RIGHT COURTESY LAMP
(8W-44-2)
3
CARGO LAMP
(8W-44-4)
2
OVERHEAD MAP/ READING LAMP
(8W-44-4)

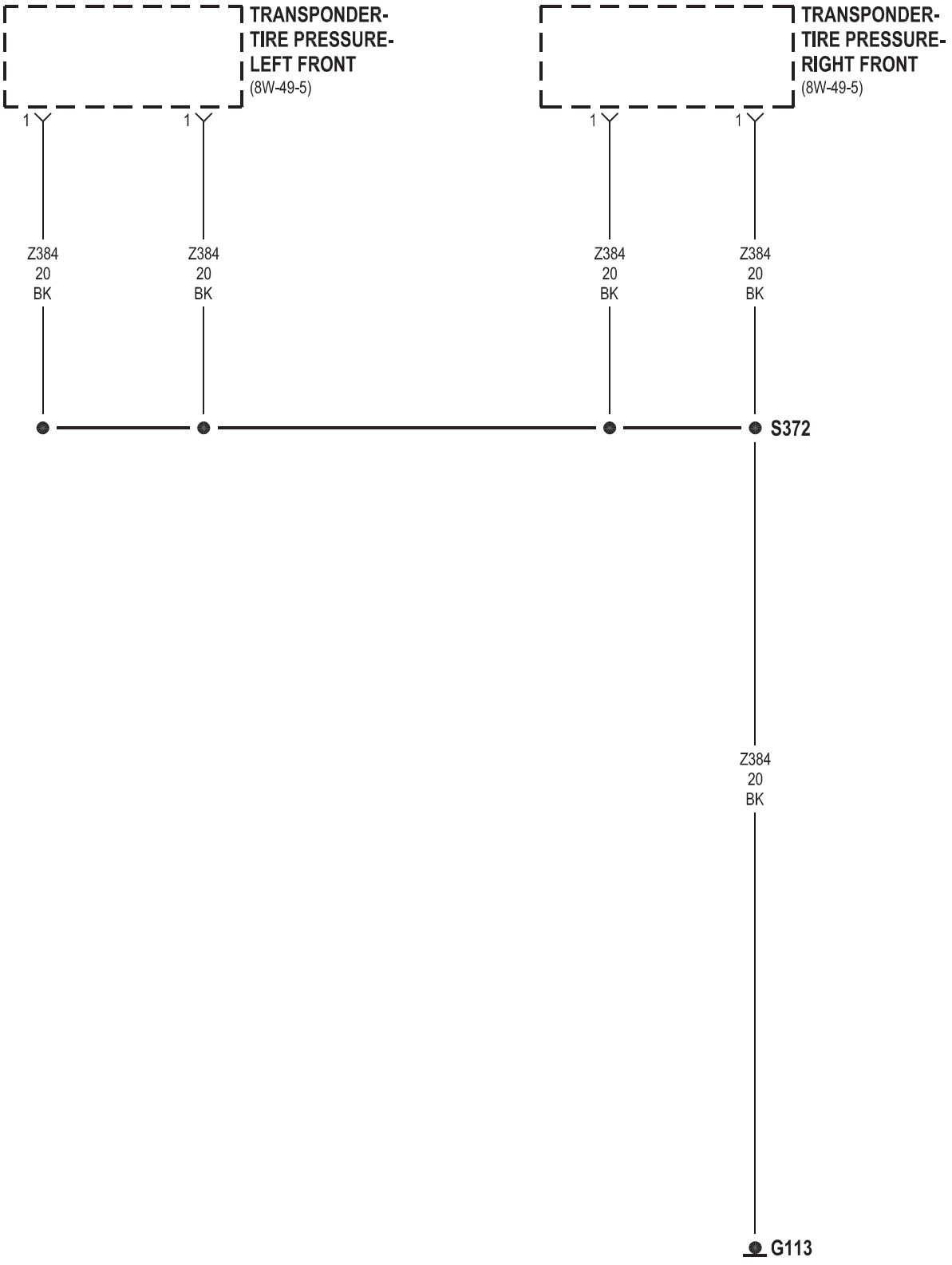
TRANSPONDER-
TIRE PRESSURE-
LEFT FRONT
(8W-49-5)
TRANSPONDER-
TIRE PRESSURE-
RIGHT FRONT
(8W-49-5)
1
1
1
1
Z384
20
BK
Z384
20
BK
Z384
20
BK
Z384
20
BK
S372
Z384
20
BK
G113

8W-18 BUS COMMUNICATIONS

Component	Page
Airbag Control Module	8W-18-4
Anti-Lock Brake Module	8W-18-2, 3, 5
Body Control Module	8W-18-4
Compass Mini-Trip Computer	8W-18-4
Data Link Connector	8W-18-2, 3, 4
Engine Control Module	8W-18-3, 5
Front Control Module	8W-18-3, 5
Fuse 33	8W-18-2, 3
G100	8W-18-2, 3
Instrument Cluster	8W-18-4
Intrusion Transceiver Module	8W-18-4
Junction Block	8W-18-2, 3
Occupant Classification Module	8W-18-4
Powertrain Control Module	8W-18-2, 5
Radio	8W-18-4
Sentry Key Remote Entry Module	8W-18-4
Transmission Control Module	8W-18-3, 5

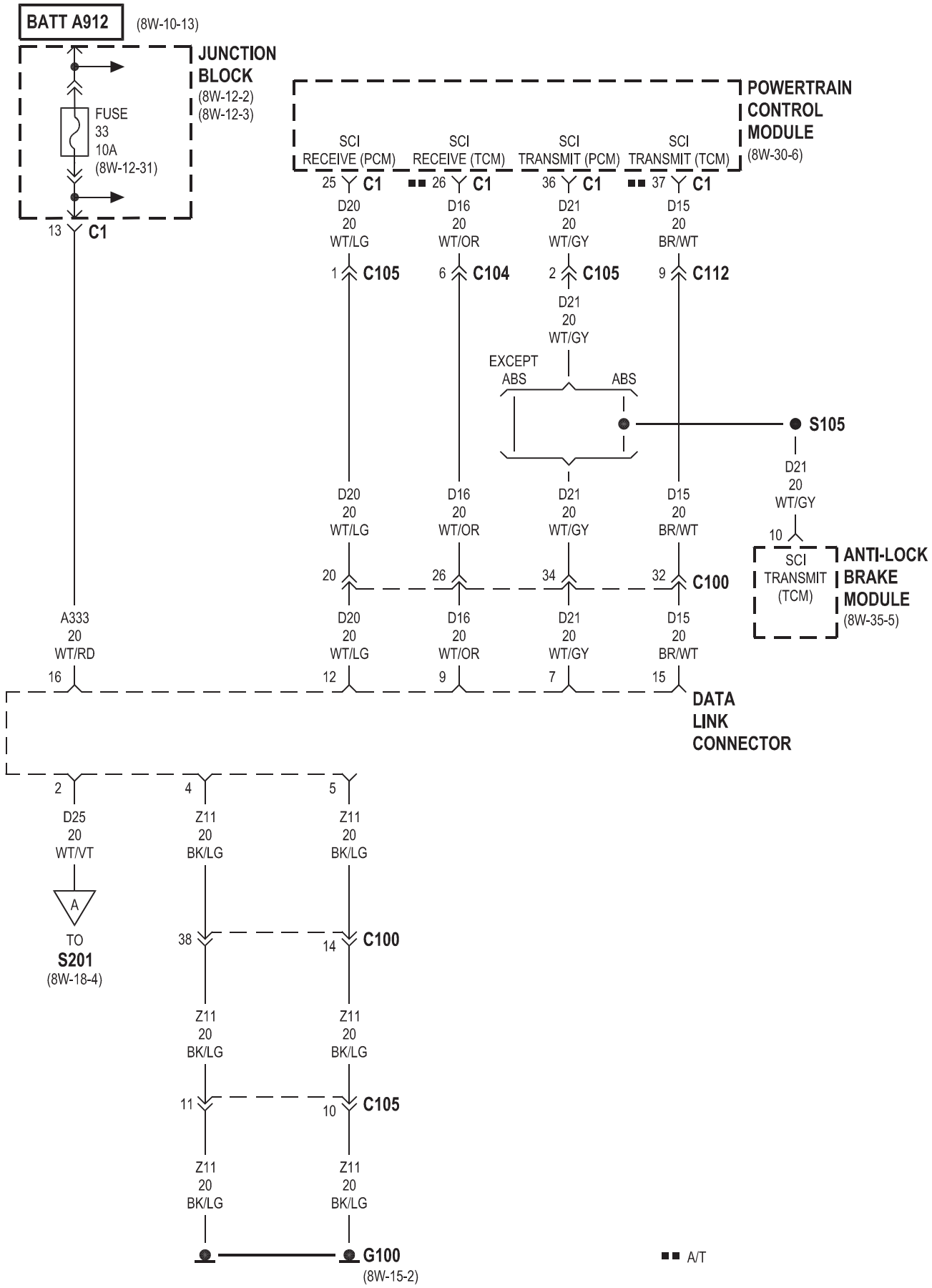
BATT A912
(8W-10-13)
JUNCTION BLOCK
(8W-12-2)
(8W-12-3)
FUSE
33
10A
(8W-12-31)
13
C1
POWERTRAIN CONTROL MODULE
(8W-30-6)
SCI RECEIVE (PCM)
SCI RECEIVE (TCM)
SCI TRANSMIT (PCM)
SCI TRANSMIT (TCM)
25
C1
26
C1
36
C1
37
C1
D20
20
WT/LG
D16
20
WT/OR
D21
20
WT/GY
D15
20
BR/WT
1
C105
6
C104
2
C105
9
C112
D21
20
WT/GY
EXCEPT ABS
ABS
S105
D21
20
WT/GY
10
SCI TRANSMIT (TCM)
ANTI-LOCK BRAKE MODULE
(8W-35-5)
D20
20
WT/LG
D16
20
WT/OR
D21
20
WT/GY
D15
20
BR/WT
20
26
34
32
C100
A333
20
WT/RD
16
D20
20
WT/LG
12
D16
20
WT/OR
9
D21
20
WT/GY
7
D15
20
BR/WT
15
DATA LINK CONNECTOR
2
4
5
D25
20
WT/VT
Z11
20
BK/LG
Z11
20
BK/LG
A
TO
S201
(8W-18-4)
38
14
C100
Z11
20
BK/LG
Z11
20
BK/LG
11
10
C105
Z11
20
BK/LG
Z11
20
BK/LG
G100
(8W-15-2)
A/T

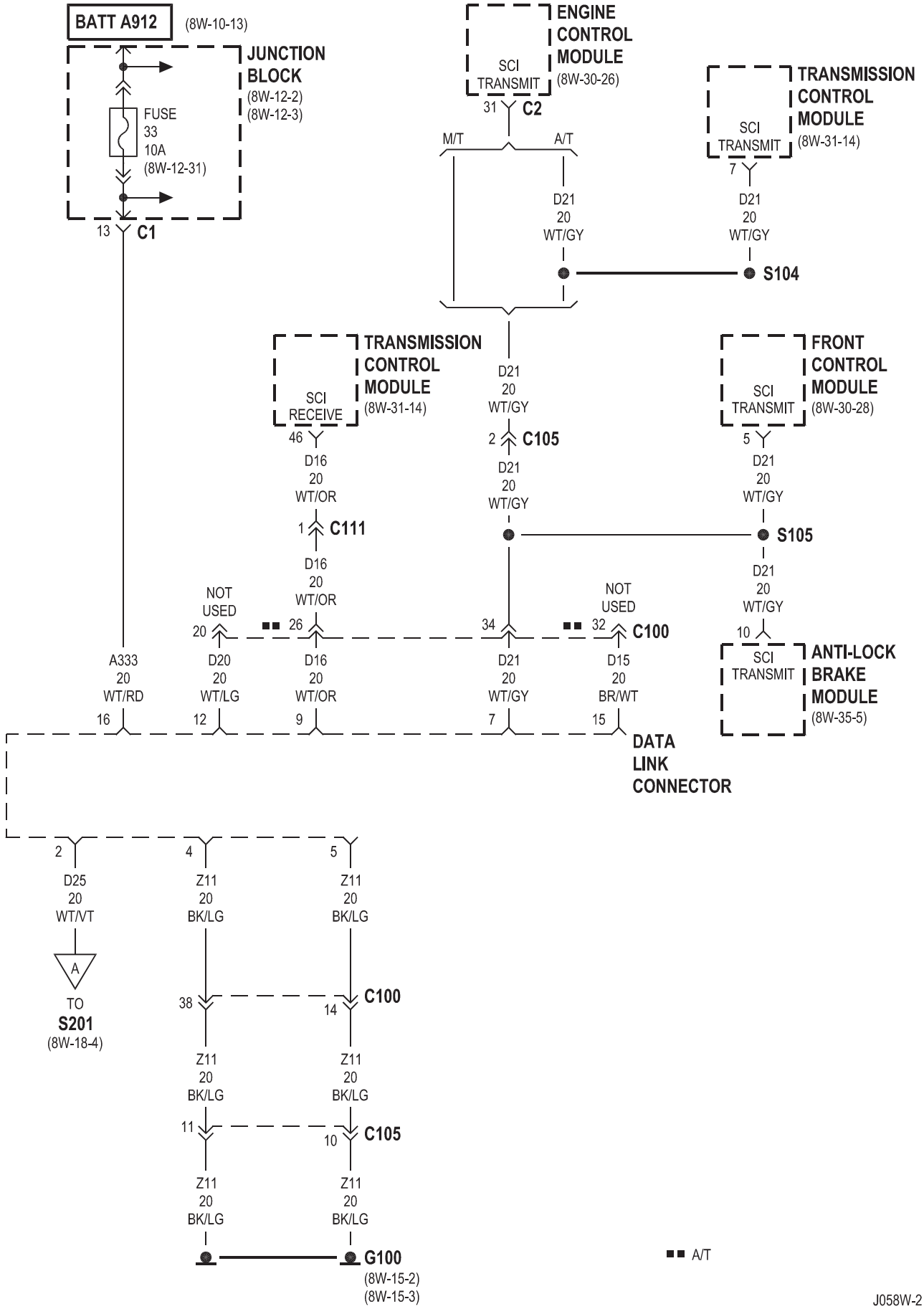
BATT A912
(8W-10-13)
JUNCTION BLOCK
(8W-12-2)
(8W-12-3)
FUSE 33 10A
(8W-12-31)
13
C1
ENGINE CONTROL MODULE
(8W-30-26)
SCI TRANSMIT
31
C2
M/T
A/T
D21 20 WT/GY
TRANSMISSION CONTROL MODULE
(8W-31-14)
SCI TRANSMIT
7
D21 20 WT/GY
S104
TRANSMISSION CONTROL MODULE
(8W-31-14)
SCI RECEIVE
46
D16 20 WT/OR
1
C111
D16 20 WT/OR
D21 20 WT/GY
2
C105
D21 20 WT/GY
FRONT CONTROL MODULE
(8W-30-28)
SCI TRANSMIT
5
D21 20 WT/GY
S105
D21 20 WT/GY
NOT USED
20
26
34
NOT USED
32
C100
10
SCI TRANSMIT
ANTI-LOCK BRAKE MODULE
(8W-35-5)
A333 20 WT/RD
16
D20 20 WT/LG
12
D16 20 WT/OR
9
D21 20 WT/GY
7
D15 20 BR/WT
15
DATA LINK CONNECTOR
2
D25 20 WT/VT
A
TO
S201
(8W-18-4)
4
Z11 20 BK/LG
5
Z11 20 BK/LG
38
14
C100
Z11 20 BK/LG
Z11 20 BK/LG
11
10
C105
Z11 20 BK/LG
Z11 20 BK/LG
G100
(8W-15-2)
(8W-15-3)
A/T

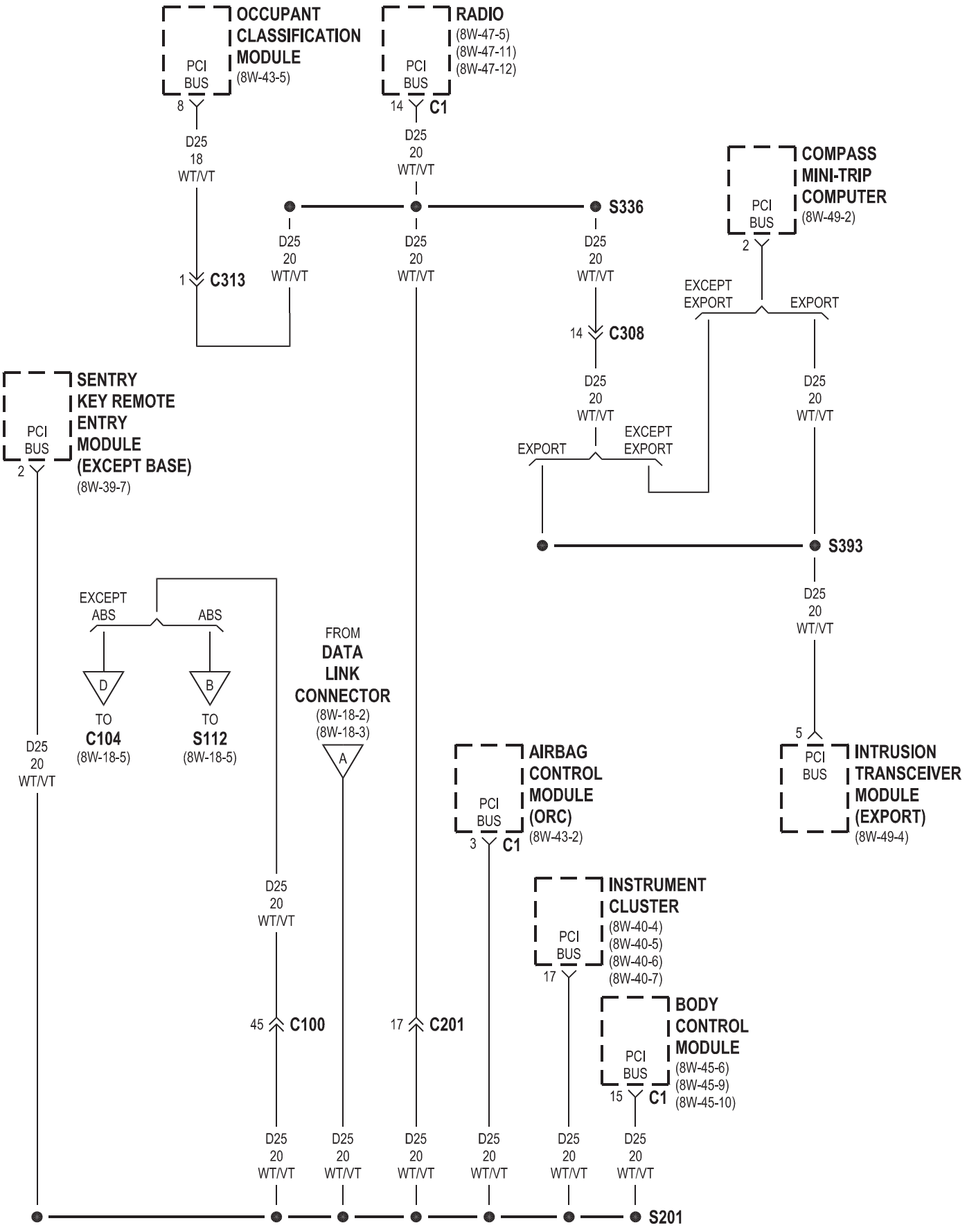
OCCUPANT CLASSIFICATION MODULE
(8W-43-5)
PCI BUS
8
D25 18 WT/VT
1 C313
RADIO
(8W-47-5)
(8W-47-11)
(8W-47-12)
PCI BUS
14 C1
D25 20 WT/VT
S336
D25 20 WT/VT
D25 20 WT/VT
D25 20 WT/VT
COMPASS MINI-TRIP COMPUTER
(8W-49-2)
PCI BUS
2
EXCEPT EXPORT
EXPORT
14 C308
D25 20 WT/VT
D25 20 WT/VT
EXPORT
EXCEPT EXPORT
SENTRY KEY REMOTE ENTRY MODULE (EXCEPT BASE)
(8W-39-7)
PCI BUS
2
S393
D25 20 WT/VT
EXCEPT ABS
ABS
D
B
TO C104
(8W-18-5)
TO S112
(8W-18-5)
FROM DATA LINK CONNECTOR
(8W-18-2)
(8W-18-3)
A
D25 20 WT/VT
5
INTRUSION TRANSCEIVER MODULE (EXPORT)
(8W-49-4)
PCI BUS
AIRBAG CONTROL MODULE (ORC)
(8W-43-2)
PCI BUS
3 C1
D25 20 WT/VT
INSTRUMENT CLUSTER
(8W-40-4)
(8W-40-5)
(8W-40-6)
(8W-40-7)
PCI BUS
17
45 C100
17 C201
BODY CONTROL MODULE
(8W-45-6)
(8W-45-9)
(8W-45-10)
PCI BUS
15 C1
D25 20 WT/VT
D25 20 WT/VT
D25 20 WT/VT
D25 20 WT/VT
D25 20 WT/VT
D25 20 WT/VT
S201

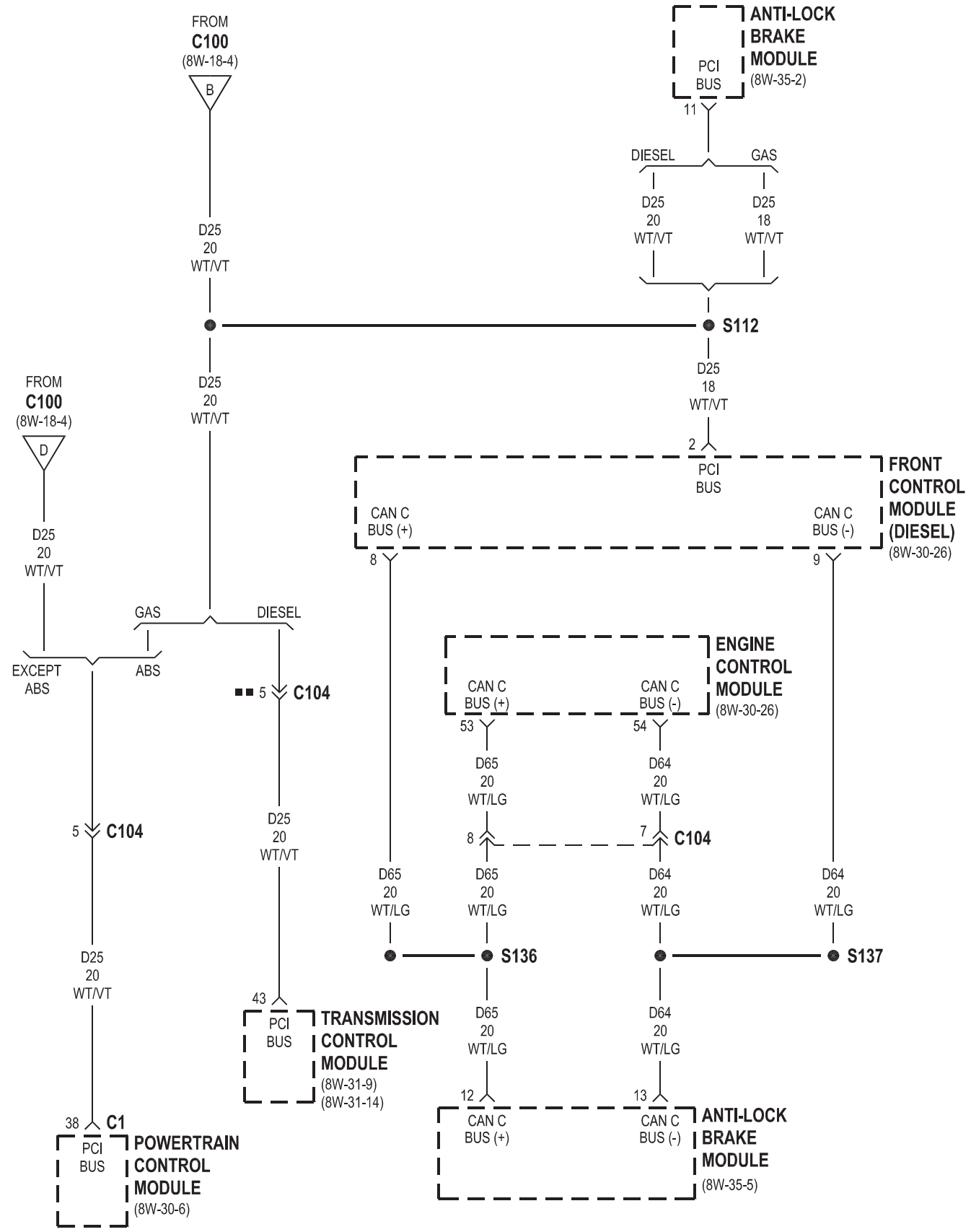
FROM
C100
(8W-18-4)
B
D25
20
WT/VT
ANTI-LOCK
BRAKE
MODULE
(8W-35-2)
PCI
BUS
11
DIESEL
GAS
D25
20
WT/VT
D25
18
WT/VT
S112
D25
18
WT/VT
2
PCI
BUS
FRONT
CONTROL
MODULE
(DIESEL)
(8W-30-26)
CAN C
BUS (+)
CAN C
BUS (-)
8
9
FROM
C100
(8W-18-4)
D
D25
20
WT/VT
GAS
DIESEL
EXCEPT
ABS
ABS
5
C104
ENGINE
CONTROL
MODULE
(8W-30-26)
CAN C
BUS (+)
CAN C
BUS (-)
53
54
D65
20
WT/LG
D64
20
WT/LG
8
7
C104
5
C104
D25
20
WT/VT
D65
20
WT/LG
D65
20
WT/LG
D64
20
WT/LG
D64
20
WT/LG
S136
S137
D25
20
WT/VT
43
PCI
BUS
TRANSMISSION
CONTROL
MODULE
(8W-31-9)
(8W-31-14)
D65
20
WT/LG
D64
20
WT/LG
12
13
CAN C
BUS (+)
CAN C
BUS (-)
ANTI-LOCK
BRAKE
MODULE
(8W-35-5)
38
C1
PCI
BUS
POWERTRAIN
CONTROL
MODULE
(8W-30-6)
A/T

8W-20 CHARGING SYSTEM

Component	Page
Auto Shut Down Relay	8W-20-2
Battery	8W-20-2, 3
Front Control Module	8W-20-3
Fuse 6	8W-20-2
Fuse 26	8W-20-2
Fusible Link	8W-20-2, 3
G111	8W-20-2
Generator	8W-20-2, 3
Power Distribution Center	8W-20-2
Powertrain Control Module	8W-20-2

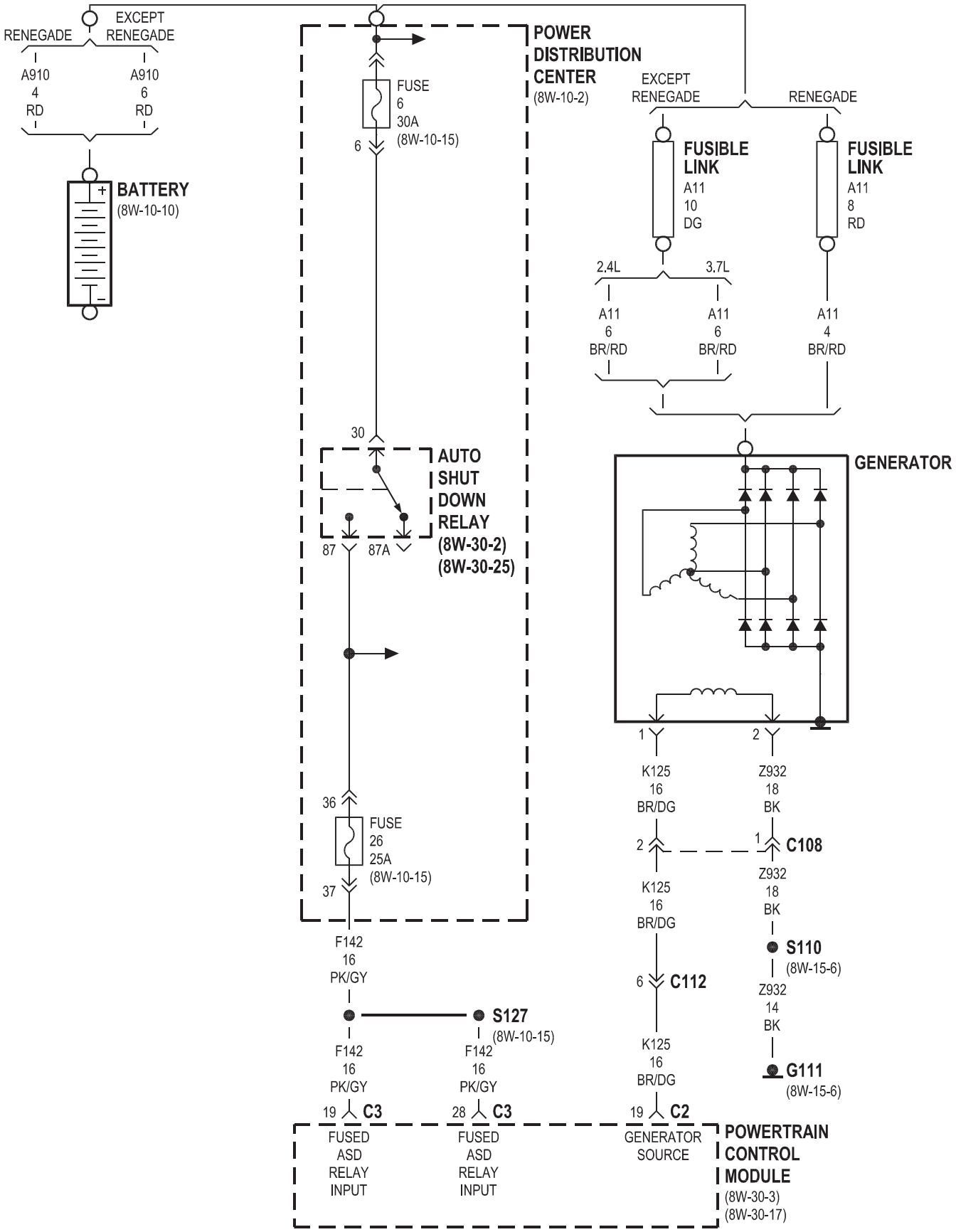
RENEGADE
EXCEPT RENEGADE
A910 4 RD
A910 6 RD
BATTERY
(8W-10-10)
POWER DISTRIBUTION CENTER
(8W-10-2)
FUSE 6 30A
(8W-10-15)
6
30
AUTO SHUT DOWN RELAY
(8W-30-2)
(8W-30-25)
87
87A
36
FUSE 26 25A
(8W-10-15)
37
F142 16 PK/GY
S127
(8W-10-15)
F142 16 PK/GY
F142 16 PK/GY
19 C3
28 C3
FUSED ASD RELAY INPUT
FUSED ASD RELAY INPUT
EXCEPT RENEGADE
RENEGADE
FUSIBLE LINK
A11 10 DG
FUSIBLE LINK
A11 8 RD
2.4L
3.7L
A11 6 BR/RD
A11 6 BR/RD
A11 4 BR/RD
GENERATOR
1
2
K125 16 BR/DG
Z932 18 BK
2
1
C108
K125 16 BR/DG
Z932 18 BK
S110
(8W-15-6)
6
C112
Z932 14 BK
K125 16 BR/DG
G111
(8W-15-6)
19 C2
GENERATOR SOURCE
POWERTRAIN CONTROL MODULE
(8W-30-3)
(8W-30-17)

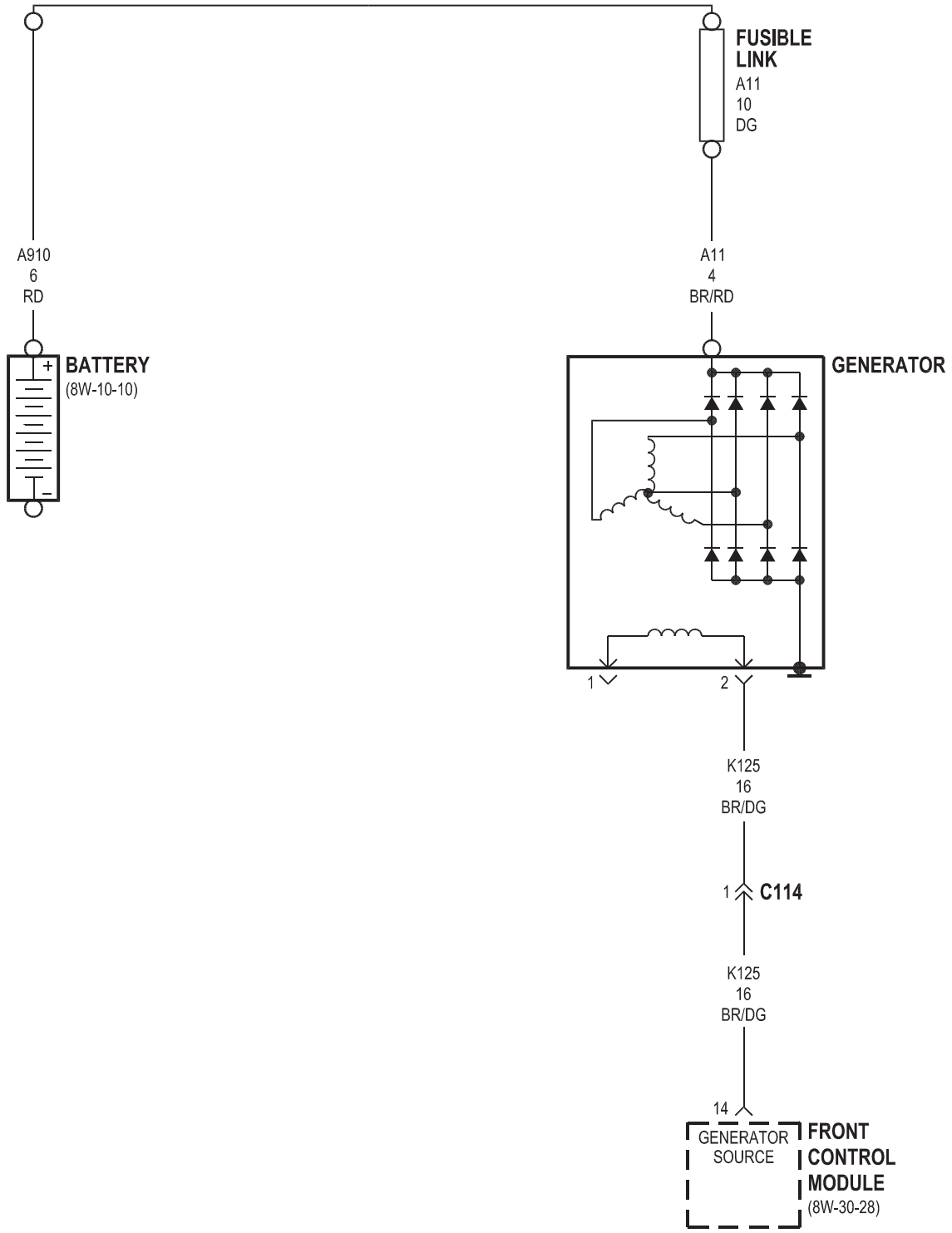
FUSIBLE LINK
A11
10
DG
A910
6
RD
A11
4
BR/RD
BATTERY
(8W-10-10)
GENERATOR
1
2
K125
16
BR/DG
1
C114
K125
16
BR/DG
14
GENERATOR SOURCE
FRONT CONTROL MODULE
(8W-30-28)

8W-21 STARTING SYSTEM

Component	Page
Automatic Day/Night Mirror	8W-21-3
Back-Up Lamp Switch	8W-21-3
Battery	8W-21-2
Clutch Interlock/Upstop Switch	8W-21-3
Engine Control Module	8W-21-2, 3
Fuse 8	8W-21-2
Fuse 28	8W-21-2
Fuse 39	8W-21-3
G202	8W-21-3
Glow Plug Module	8W-21-2
Ignition Switch	8W-21-2
Junction Block	8W-21-3
Left Tail/Stop Lamp	8W-21-3
Power Distribution Center	8W-21-2
Powertrain Control Module	8W-21-2, 3
Right Tail/Stop Lamp	8W-21-3
Starter Motor	8W-21-2
Starter Motor Relay	8W-21-2
Trailer Tow Connector	8W-21-3

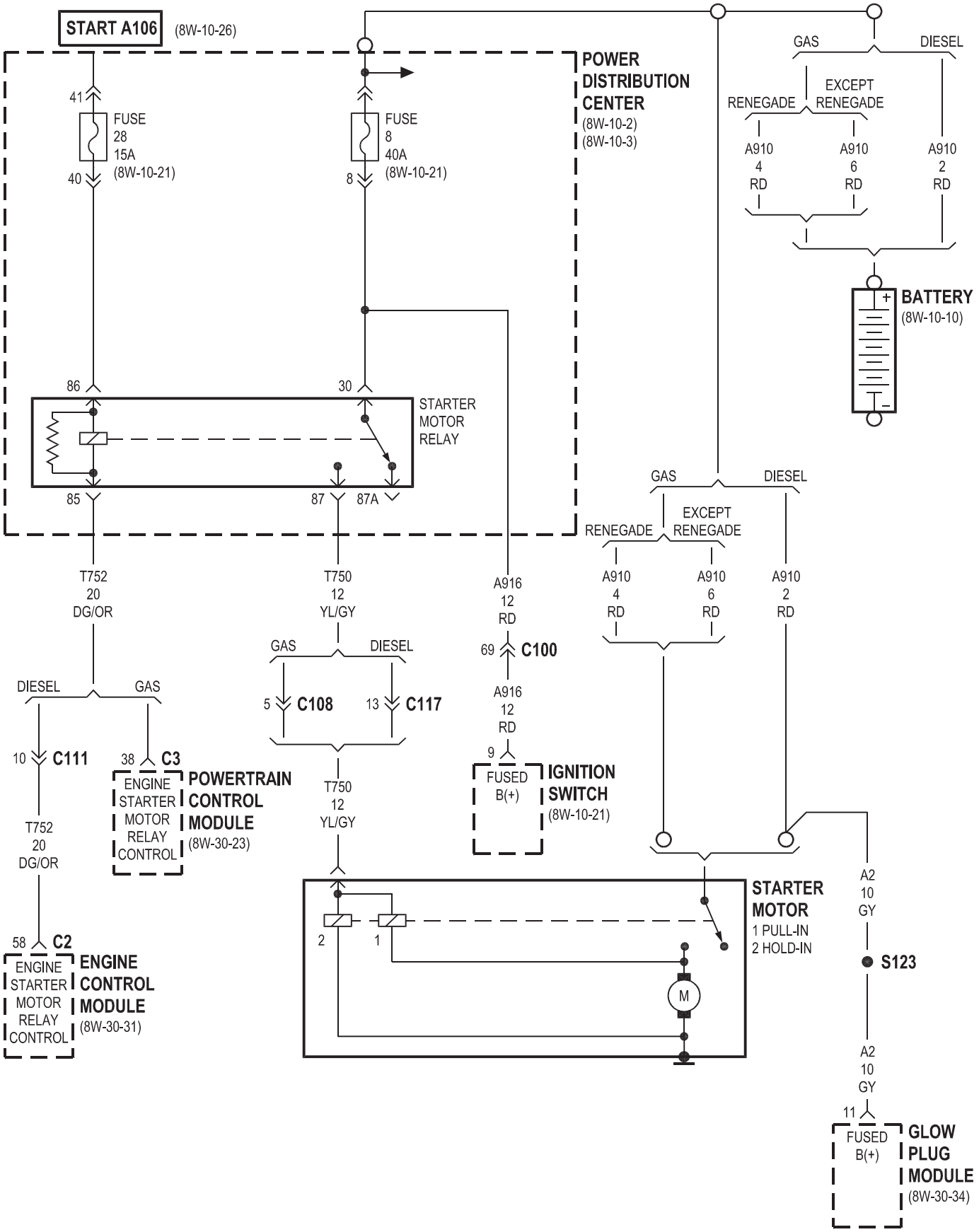
START A106
(8W-10-26)
POWER DISTRIBUTION CENTER
(8W-10-2)
(8W-10-3)
41
FUSE 28 15A
(8W-10-21)
40
FUSE 8 40A
(8W-10-21)
8
GAS
DIESEL
RENEGADE
EXCEPT RENEGADE
A910 4 RD
A910 6 RD
A910 2 RD
BATTERY
(8W-10-10)
86
30
STARTER MOTOR RELAY
85
87
87A
T752 20 DG/OR
T750 12 YL/GY
A916 12 RD
69
C100
A916 12 RD
9
FUSED B(+)
IGNITION SWITCH
(8W-10-21)
5
C108
13
C117
10
C111
38
C3
ENGINE STARTER MOTOR RELAY CONTROL
POWERTRAIN CONTROL MODULE
(8W-30-23)
T752 20 DG/OR
58
C2
ENGINE STARTER MOTOR RELAY CONTROL
ENGINE CONTROL MODULE
(8W-30-31)
2
1
M
STARTER MOTOR
1 PULL-IN
2 HOLD-IN
A2 10 GY
S123
A2 10 GY
11
FUSED B(+)
GLOW PLUG MODULE
(8W-30-34)

M/T

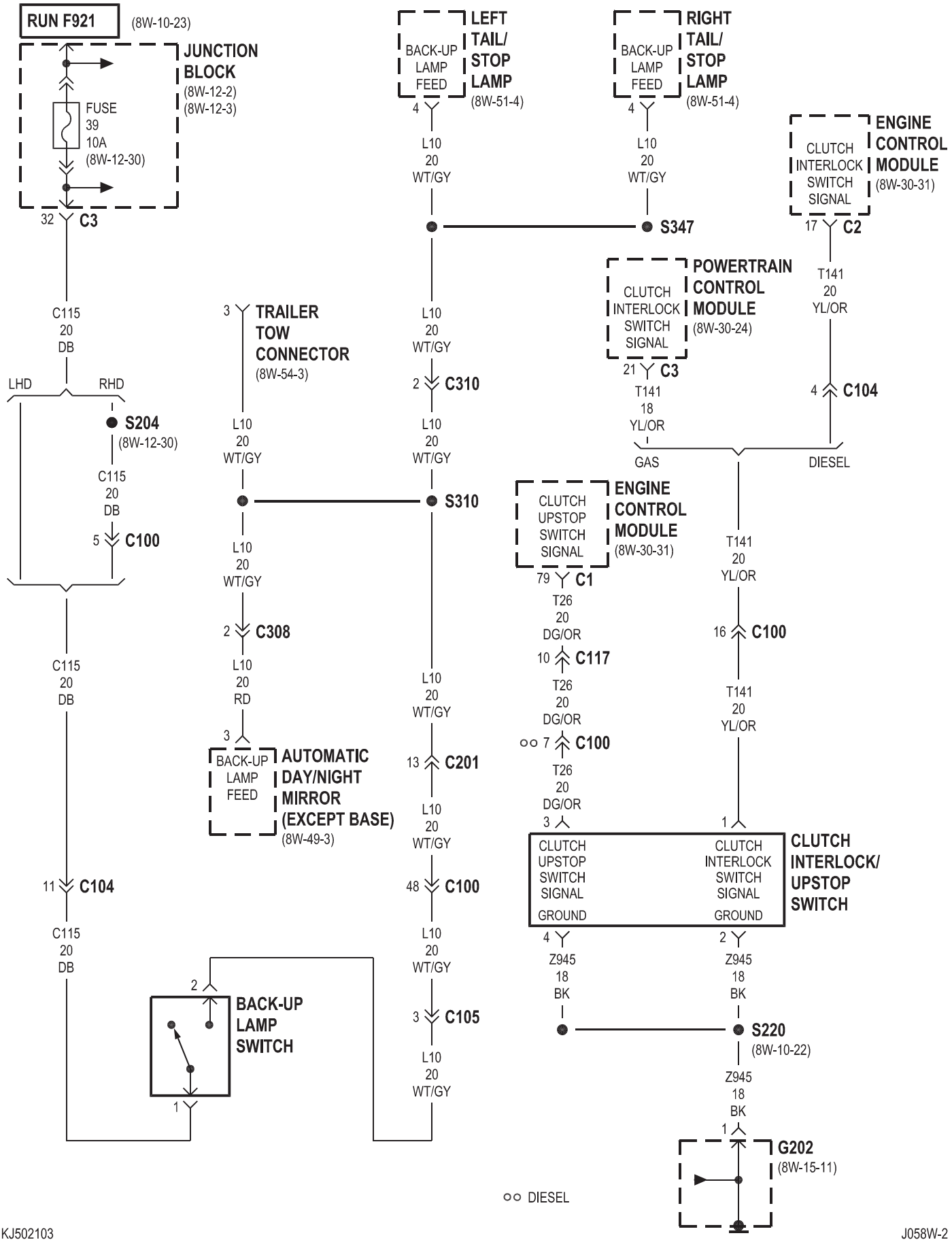
RUN F921
(8W-10-23)
JUNCTION BLOCK
(8W-12-2)
(8W-12-3)
FUSE 39 10A
(8W-12-30)
32 C3
C115 20 DB
LHD
RHD
S204
(8W-12-30)
C115 20 DB
5 C100
C115 20 DB
11 C104
C115 20 DB
BACK-UP LAMP SWITCH
2
1
3 TRAILER TOW CONNECTOR
(8W-54-3)
L10 20 WT/GY
S310
L10 20 WT/GY
2 C308
L10 20 RD
3
BACK-UP LAMP FEED
AUTOMATIC DAY/NIGHT MIRROR (EXCEPT BASE)
(8W-49-3)
BACK-UP LAMP FEED
LEFT TAIL/ STOP LAMP
(8W-51-4)
4
L10 20 WT/GY
S347
L10 20 WT/GY
2 C310
L10 20 WT/GY
13 C201
L10 20 WT/GY
48 C100
L10 20 WT/GY
3 C105
L10 20 WT/GY
BACK-UP LAMP FEED
RIGHT TAIL/ STOP LAMP
(8W-51-4)
4
L10 20 WT/GY
CLUTCH INTERLOCK SWITCH SIGNAL
POWERTRAIN CONTROL MODULE
(8W-30-24)
21 C3
T141 18 YL/OR
GAS
CLUTCH INTERLOCK SWITCH SIGNAL
ENGINE CONTROL MODULE
(8W-30-31)
17 C2
T141 20 YL/OR
4 C104
DIESEL
CLUTCH UPSTOP SWITCH SIGNAL
ENGINE CONTROL MODULE
(8W-30-31)
79 C1
T26 20 DG/OR
10 C117
T26 20 DG/OR
7 C100
T26 20 DG/OR
T141 20 YL/OR
16 C100
T141 20 YL/OR
CLUTCH UPSTOP SWITCH SIGNAL
CLUTCH INTERLOCK SWITCH SIGNAL
CLUTCH INTERLOCK/ UPSTOP SWITCH
3
1
GROUND
GROUND
4
2
Z945 18 BK
Z945 18 BK
S220
(8W-10-22)
Z945 18 BK
1
G202
(8W-15-11)
DIESEL

8W-30 FUEL/IGNITION SYSTEM

Component	Page
A/C Compressor Clutch	8W-30-33
A/C Compressor Clutch Relay	8W-30-3, 22, 23, 33
A/C Low Pressure Switch	8W-30-7, 32
A/C Pressure Transducer	8W-30-11, 13, 28
Accelerator Pedal Position Sensor	8W-30-27
Ambient Temperature Sensor	8W-30-24, 35
Auto Shut Down Relay	8W-30-2, 17, 25, 29, 34
Blower Motor Relay	8W-30-30
Body Control Module	8W-30-7
Boost Pressure Solenoid	8W-30-25
Brake Lamp Switch	8W-30-7, 31, 32
Cabin Heater	8W-30-33
Cabin Heater Relay	8W-30-25, 33
Camshaft Position Sensor	8W-30-8, 9, 28
Clockspring	8W-30-8, 32
Clutch Interlock/Upstop Switch	8W-30-24, 31
Coil On Plug No. 1	8W-30-19
Coil On Plug No. 2	8W-30-19
Coil On Plug No. 3	8W-30-19
Coil On Plug No. 4	8W-30-19
Coil On Plug No. 5	8W-30-19
Coil On Plug No. 6	8W-30-19
Coil Rail	8W-30-17
Crankshaft Position Sensor	8W-30-8, 9, 27
Data Link Connector	8W-30-6, 26, 28
EGR Air Flow Control	8W-30-25, 29
EGR Solenoid	8W-30-25, 29
Engine Control Module	8W-30-25, 26, 27, 28, 29, 30, 31, 32, 33, 34, 35, 36, 37
Engine Coolant Temperature Sensor	8W-30-10, 12, 28
Engine Oil Pressure Sensor	8W-30-28
Engine Oil Pressure Switch	8W-30-10, 12
EVAP/Purge Solenoid	8W-30-2
Front Control Module	8W-30-26, 28, 29
Fuel Heater	8W-30-30
Fuel Heater Relay	8W-30-30
Fuel Injector No. 1	8W-30-18, 35
Fuel Injector No. 2	8W-30-18, 35
Fuel Injector No. 3	8W-30-18, 35
Fuel Injector No. 4	8W-30-18, 35
Fuel Injector No. 5	8W-30-18
Fuel Injector No. 6	8W-30-18
Fuel Pressure Sensor	8W-30-35
Fuel Pressure Solenoid	8W-30-30
Fuel Pump Module	8W-30-4, 5, 29
Fuel Pump Relay	8W-30-3, 4, 5, 22, 23
Fuel Temperature Sensor	8W-30-35
Fuse 2	8W-30-22, 37
Fuse 6	8W-30-2, 25, 29, 34
Fuse 11	8W-30-30
Fuse 12	8W-30-32
Fuse 14	8W-30-3, 26, 36
Fuse 16	8W-30-25, 29, 33, 34, 37
Fuse 21	8W-30-33
Fuse 24	8W-30-2, 3, 30
Fuse 26	8W-30-2, 17, 25
Fuse 28	8W-30-23
G100	8W-30-6, 27, 29, 34
G103	8W-30-14, 15, 16, 24, 30, 33
G111	8W-30-26, 30
G112	8W-30-7, 22, 37
G350	8W-30-4, 5
Generator	8W-30-3, 28
Glow Plug Module	8W-30-34
Glow Plug No. 1	8W-30-34
Glow Plug No. 2	8W-30-34
Glow Plug No. 3	8W-30-34
Glow Plug No. 4	8W-30-34
High Speed Radiator Fan Relay	8W-30-3, 22, 29, 37
Idle Air Control Motor	8W-30-20, 21
Intake Air Temperature Sensor	8W-30-10, 12
Junction Block	8W-30-3, 26, 30, 32, 36
Knock Sensor	8W-30-9
Left Speed Control Switch	8W-30-8, 32
Low Speed Radiator Fan Relay	8W-30-3, 22, 37
Manifold Absolute Pressure Sensor	8W-30-11, 13
Mass Air Flow Sensor	8W-30-36
Natural Vacuum Leak Detection Pump	8W-30-4, 5
Oxygen Sensor 1/1 Upstream	8W-30-14, 15
Oxygen Sensor 1/2 Downstream	8W-30-14, 16
Oxygen Sensor 2/1 Upstream	8W-30-15
Oxygen Sensor 2/2 Downstream	8W-30-16
Power Distribution Center	8W-30-2, 3, 17, 22, 23, 25, 29, 30, 33, 34, 37
Power Steering Pressure Switch	8W-30-24
Powertrain Control Module	8W-30-2, 3, 4, 5, 6, 7, 8, 9, 10, 11, 12, 13, 14, 15, 16, 17, 18, 19, 20, 21, 22, 23, 24
Radiator Fan Motor	8W-30-22, 37
Right Speed Control Switch	8W-30-8, 32
Shifter Assembly	8W-30-31
Speed Control Servo	8W-30-7
Starter Motor	8W-30-34
Starter Motor Relay	8W-30-23, 31
Throttle Position Sensor	8W-30-20, 21
Transfer Case Position Sensor	8W-30-8, 24, 31
Vacuum Reservoir Solenoid	8W-30-34
Water In Fuel Sensor	8W-30-26

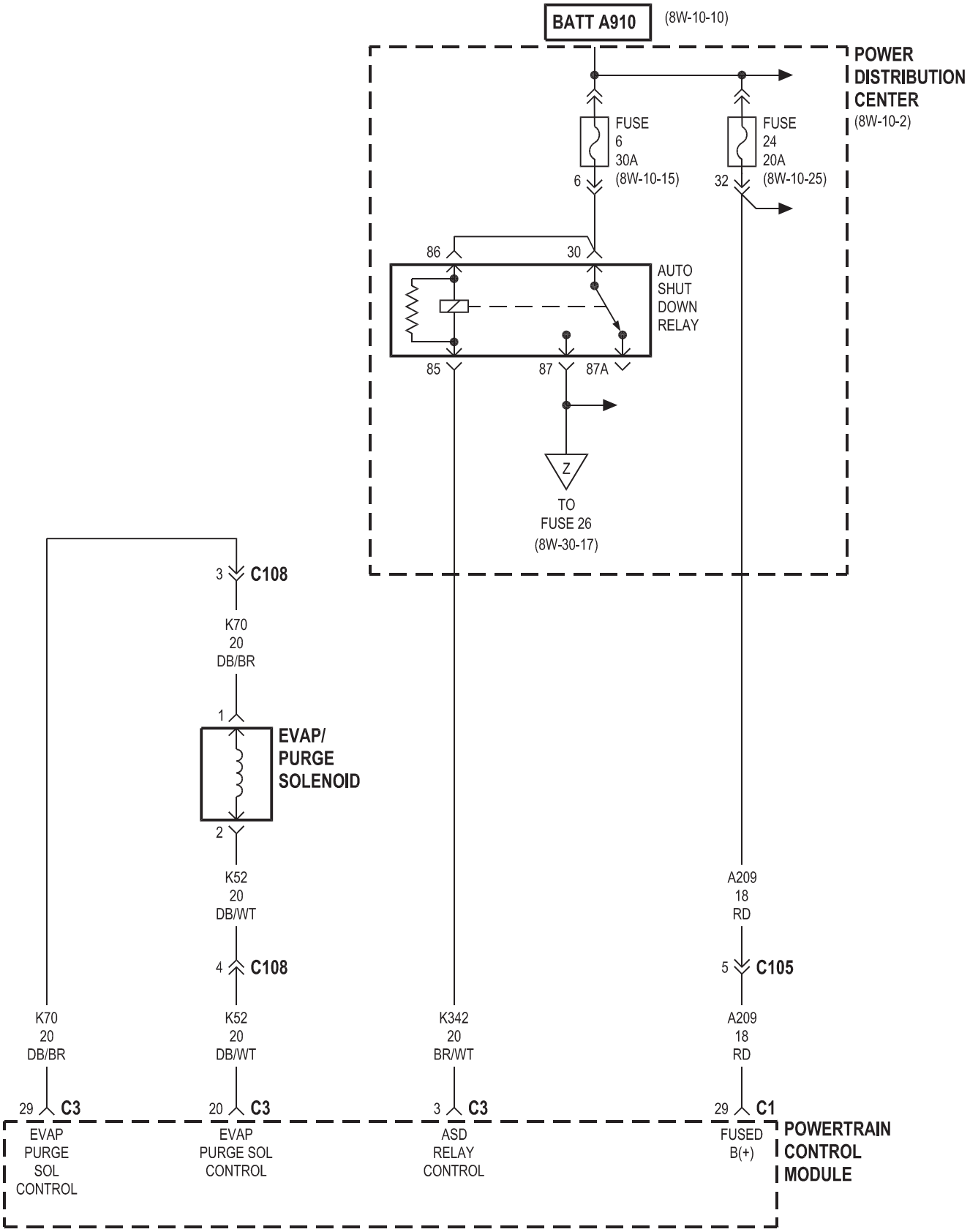
BATT A910
(8W-10-10)
POWER DISTRIBUTION CENTER
(8W-10-2)
FUSE 6 30A
(8W-10-15)
FUSE 24 20A
(8W-10-25)
6
32
86
30
AUTO SHUT DOWN RELAY
85
87
87A
Z
TO FUSE 26
(8W-30-17)
3
C108
K70 20 DB/BR
1
EVAP/ PURGE SOLENOID
2
K52 20 DB/WT
4
C108
A209 18 RD
5
C105
K70 20 DB/BR
K52 20 DB/WT
K342 20 BR/WT
A209 18 RD
29
C3
20
C3
3
C3
29
C1
EVAP PURGE SOL CONTROL
EVAP PURGE SOL CONTROL
ASD RELAY CONTROL
FUSED B(+)
POWERTRAIN CONTROL MODULE

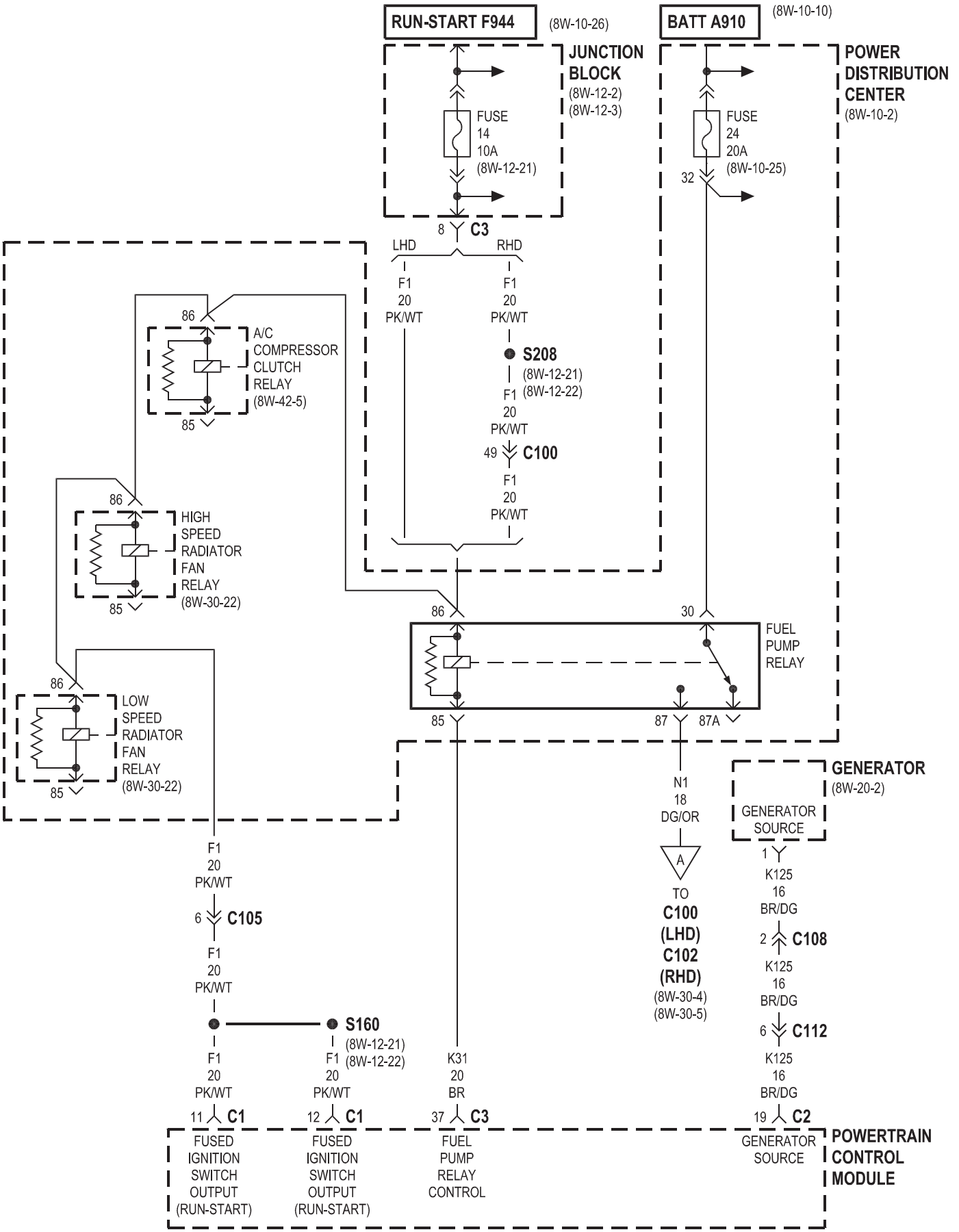
RUN-START F944
(8W-10-26)
BATT A910
(8W-10-10)
JUNCTION BLOCK
(8W-12-2)
(8W-12-3)
POWER DISTRIBUTION CENTER
(8W-10-2)
FUSE 14 10A (8W-12-21)
FUSE 24 20A (8W-10-25)
32
8
C3
LHD
RHD
F1 20 PK/WT
F1 20 PK/WT
S208
(8W-12-21)
(8W-12-22)
F1 20 PK/WT
49
C100
F1 20 PK/WT
86
A/C COMPRESSOR CLUTCH RELAY
(8W-42-5)
85
86
HIGH SPEED RADIATOR FAN RELAY
(8W-30-22)
85
86
LOW SPEED RADIATOR FAN RELAY
(8W-30-22)
85
86
30
FUEL PUMP RELAY
85
87
87A
GENERATOR
(8W-20-2)
GENERATOR SOURCE
N1 18 DG/OR
A
TO C100 (LHD) C102 (RHD)
(8W-30-4)
(8W-30-5)
1
K125 16 BR/DG
2
C108
K125 16 BR/DG
6
C112
K125 16 BR/DG
F1 20 PK/WT
6
C105
F1 20 PK/WT
S160
(8W-12-21)
(8W-12-22)
F1 20 PK/WT
F1 20 PK/WT
K31 20 BR
11
C1
12
C1
37
C3
19
C2
FUSED IGNITION SWITCH OUTPUT (RUN-START)
FUSED IGNITION SWITCH OUTPUT (RUN-START)
FUEL PUMP RELAY CONTROL
GENERATOR SOURCE
POWERTRAIN CONTROL MODULE

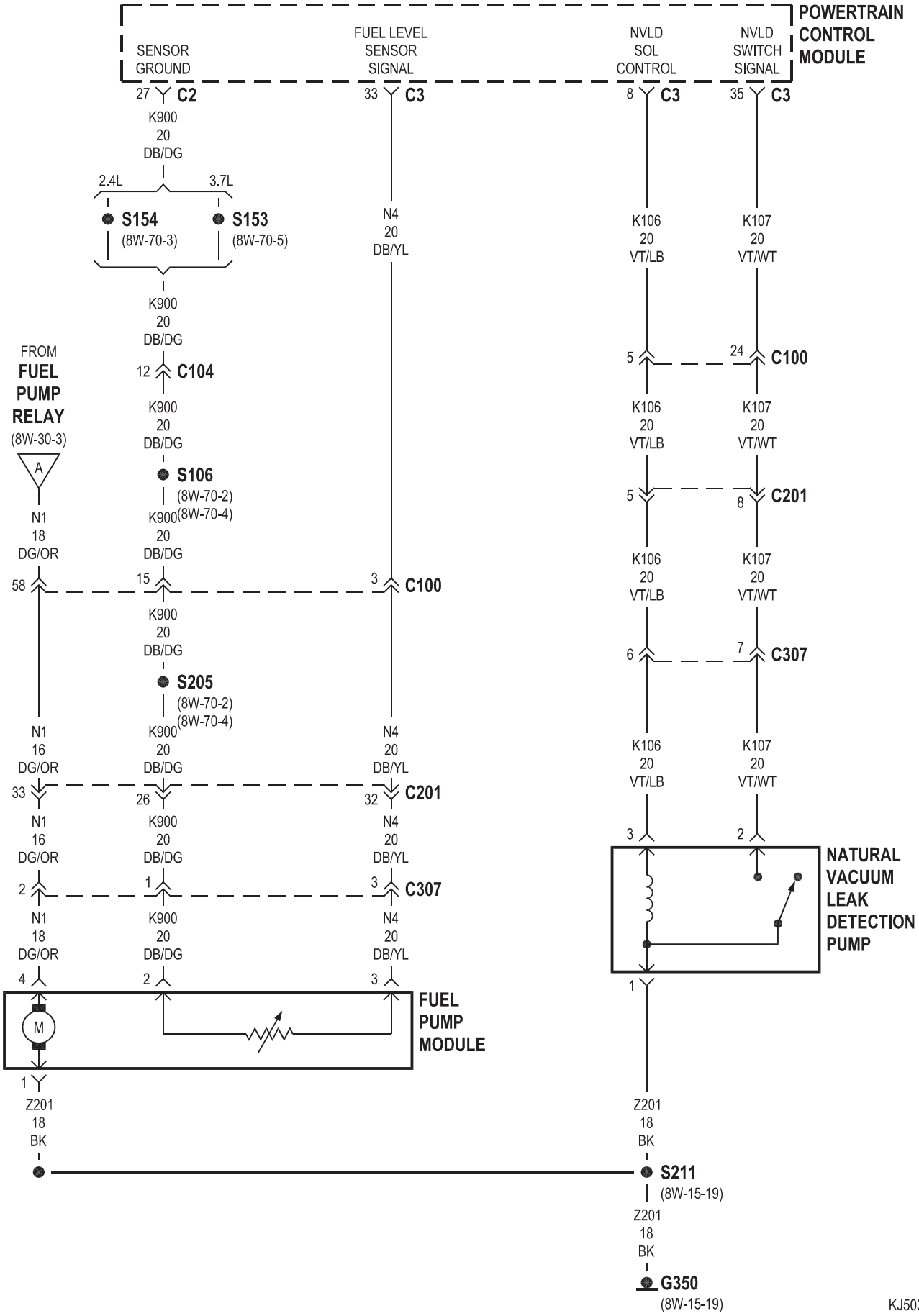
POWERTRAIN CONTROL MODULE
SENSOR GROUND
FUEL LEVEL SENSOR SIGNAL
NVLD SOL CONTROL
NVLD SWITCH SIGNAL
27 C2
33 C3
8 C3
35 C3
K900 20 DB/DG
2.4L
3.7L
S154 (8W-70-3)
S153 (8W-70-5)
N4 20 DB/YL
K106 20 VT/LB
K107 20 VT/WT
K900 20 DB/DG
FROM FUEL PUMP RELAY (8W-30-3)
12 C104
5
24 C100
K900 20 DB/DG
S106 (8W-70-2) (8W-70-4)
5
8 C201
N1 18 DG/OR
58
15
3 C100
S205 (8W-70-2) (8W-70-4)
6
7 C307
N1 16 DG/OR
33
26
32 C201
N1 16 DG/OR
2
1
3 C307
N1 18 DG/OR
4
2
3
NATURAL VACUUM LEAK DETECTION PUMP
FUEL PUMP MODULE
1
Z201 18 BK
S211 (8W-15-19)
G350 (8W-15-19)

GAS RHD

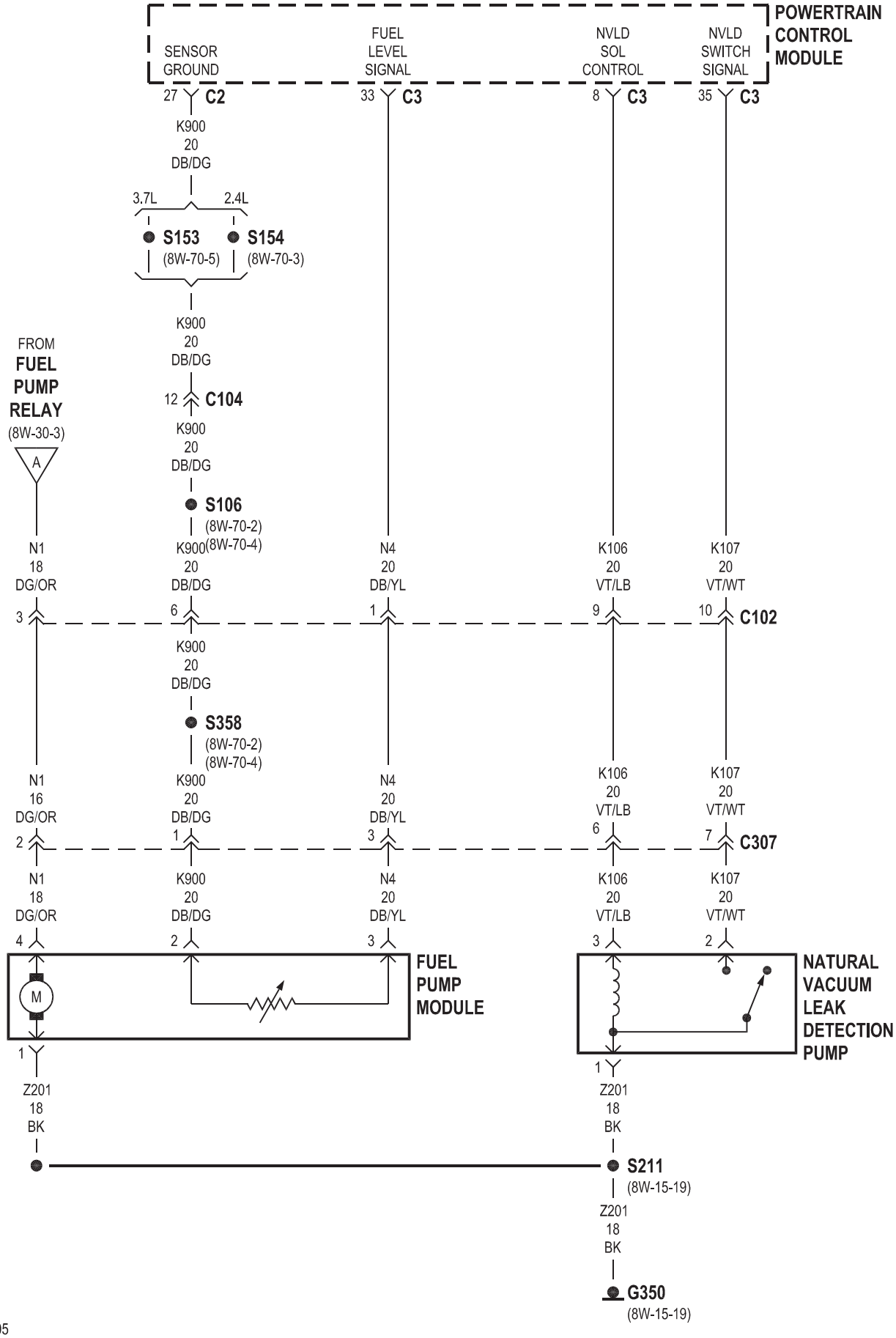
POWERTRAIN CONTROL MODULE
SENSOR GROUND
FUEL LEVEL SIGNAL
NVLD SOL CONTROL
NVLD SWITCH SIGNAL
27 C2
33 C3
8 C3
35 C3
K900 20 DB/DG
3.7L
2.4L
S153 (8W-70-5)
S154 (8W-70-3)
K900 20 DB/DG
12 C104
K900 20 DB/DG
S106 (8W-70-2) (8W-70-4)
FROM FUEL PUMP RELAY (8W-30-3)
A
N1 18 DG/OR
K900 20 DB/DG
N4 20 DB/YL
K106 20 VT/LB
K107 20 VT/WT
3
6
1
9
10 C102
K900 20 DB/DG
S358 (8W-70-2) (8W-70-4)
N1 16 DG/OR
K900 20 DB/DG
N4 20 DB/YL
K106 20 VT/LB
K107 20 VT/WT
2
1
3
6
7 C307
N1 18 DG/OR
K900 20 DB/DG
N4 20 DB/YL
K106 20 VT/LB
K107 20 VT/WT
4
2
3
3
2
M
FUEL PUMP MODULE
NATURAL VACUUM LEAK DETECTION PUMP
1
1
Z201 18 BK
Z201 18 BK
S211 (8W-15-19)
Z201 18 BK
G350 (8W-15-19)

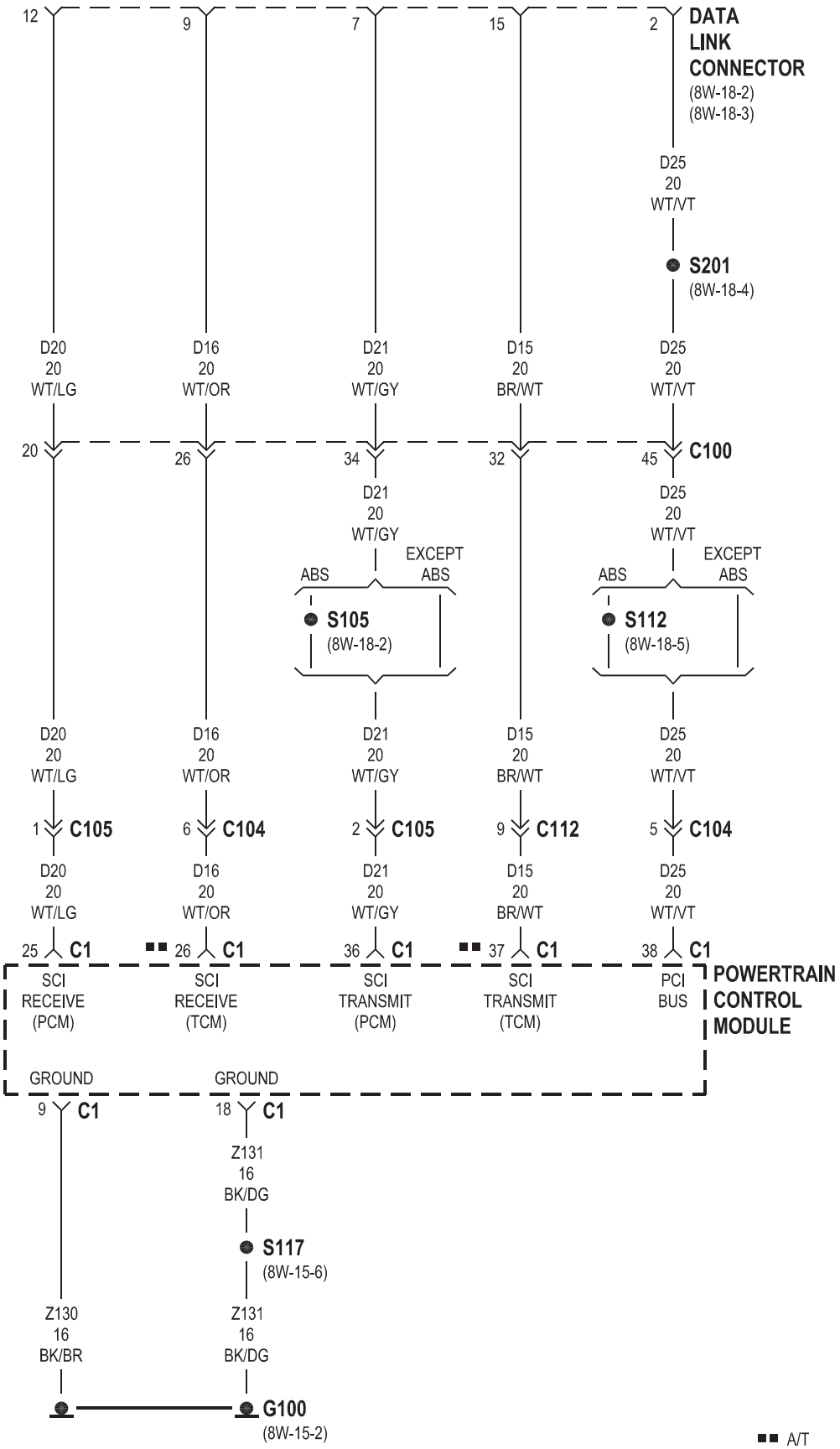
12
9
7
15
2
DATA LINK CONNECTOR
(8W-18-2)
(8W-18-3)
D25
20
WT/VT
S201
(8W-18-4)
D20
20
WT/LG
D16
20
WT/OR
D21
20
WT/GY
D15
20
BR/WT
D25
20
WT/VT
20
26
34
32
45
C100
D21
20
WT/GY
D25
20
WT/VT
ABS
EXCEPT ABS
ABS
EXCEPT ABS
S105
(8W-18-2)
S112
(8W-18-5)
D20
20
WT/LG
D16
20
WT/OR
D21
20
WT/GY
D15
20
BR/WT
D25
20
WT/VT
1 C105
6 C104
2 C105
9 C112
5 C104
D20
20
WT/LG
D16
20
WT/OR
D21
20
WT/GY
D15
20
BR/WT
D25
20
WT/VT
25 C1
26 C1
36 C1
37 C1
38 C1
SCI RECEIVE (PCM)
SCI RECEIVE (TCM)
SCI TRANSMIT (PCM)
SCI TRANSMIT (TCM)
PCI BUS
POWERTRAIN CONTROL MODULE
GROUND
GROUND
9 C1
18 C1
Z131
16
BK/DG
S117
(8W-15-6)
Z130
16
BK/BR
Z131
16
BK/DG
G100
(8W-15-2)
A/T

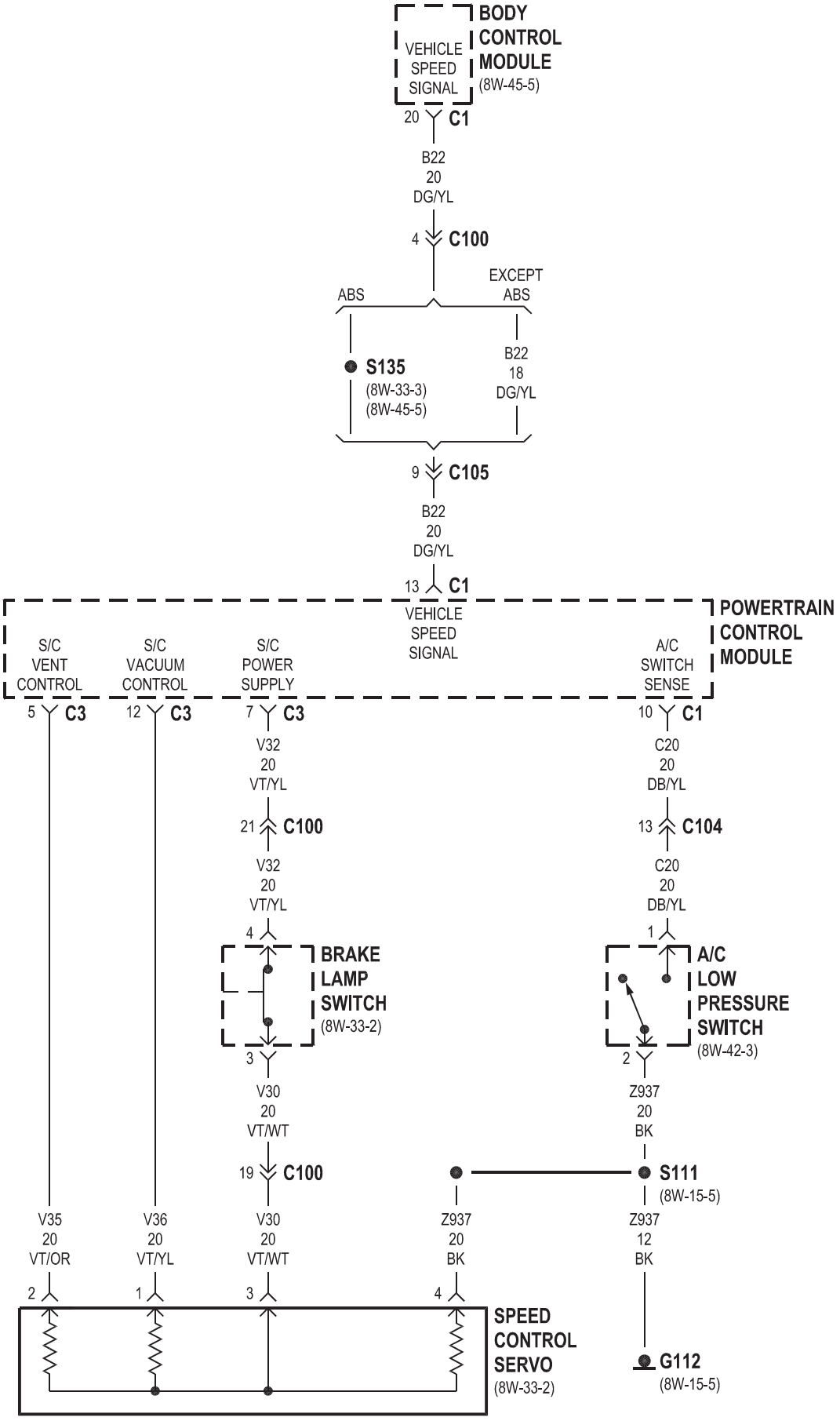
BODY CONTROL MODULE
(8W-45-5)
VEHICLE SPEED SIGNAL
20 C1
B22 20 DG/YL
4 C100
ABS
EXCEPT ABS
S135
(8W-33-3)
(8W-45-5)
B22 18 DG/YL
9 C105
B22 20 DG/YL
13 C1
VEHICLE SPEED SIGNAL
POWERTRAIN CONTROL MODULE
S/C VENT CONTROL
S/C VACUUM CONTROL
S/C POWER SUPPLY
A/C SWITCH SENSE
5 C3
12 C3
7 C3
10 C1
V32 20 VT/YL
21 C100
V32 20 VT/YL
4
BRAKE LAMP SWITCH
(8W-33-2)
3
V30 20 VT/WT
19 C100
C20 20 DB/YL
13 C104
C20 20 DB/YL
1
A/C LOW PRESSURE SWITCH
(8W-42-3)
2
Z937 20 BK
S111
(8W-15-5)
V35 20 VT/OR
V36 20 VT/YL
V30 20 VT/WT
Z937 20 BK
Z937 12 BK
2
1
3
4
SPEED CONTROL SERVO
(8W-33-2)
G112
(8W-15-5)

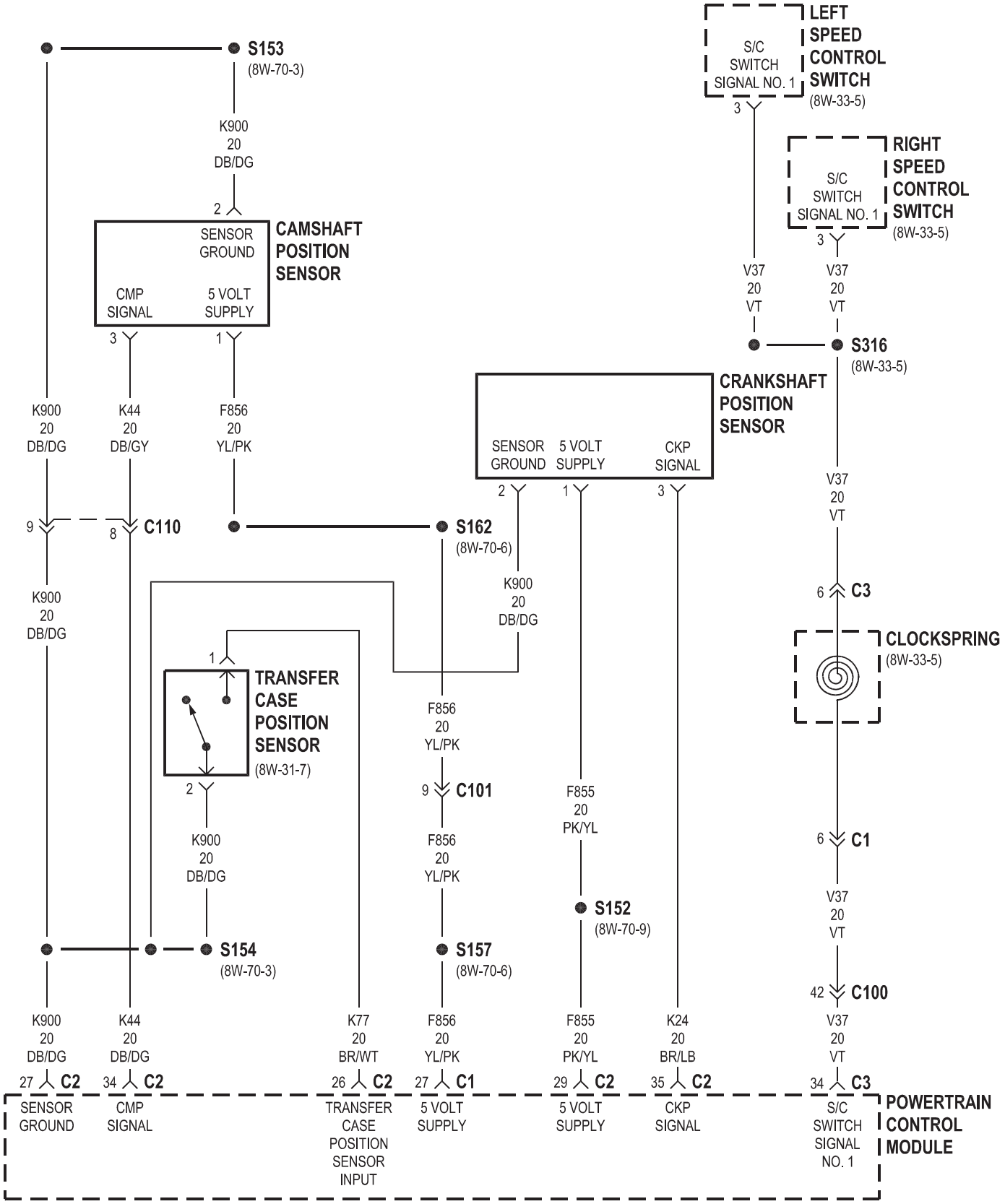
S153
(8W-70-3)
K900
20
DB/DG
2
SENSOR GROUND
CAMSHAFT POSITION SENSOR
CMP SIGNAL
5 VOLT SUPPLY
3
1
K900
20
DB/DG
K44
20
DB/GY
F856
20
YL/PK
9
8
C110
S162
(8W-70-6)
K900
20
DB/DG
1
TRANSFER CASE POSITION SENSOR
(8W-31-7)
2
K900
20
DB/DG
F856
20
YL/PK
9
C101
F856
20
YL/PK
S154
(8W-70-3)
S157
(8W-70-6)
K900
20
DB/DG
K44
20
DB/DG
K77
20
BR/WT
F856
20
YL/PK
27
C2
34
C2
26
C2
27
C1
SENSOR GROUND
CMP SIGNAL
TRANSFER CASE POSITION SENSOR INPUT
5 VOLT SUPPLY
S/C SWITCH SIGNAL NO. 1
LEFT SPEED CONTROL SWITCH
(8W-33-5)
3
RIGHT SPEED CONTROL SWITCH
(8W-33-5)
S/C SWITCH SIGNAL NO. 1
3
V37
20
VT
V37
20
VT
S316
(8W-33-5)
CRANKSHAFT POSITION SENSOR
SENSOR GROUND
5 VOLT SUPPLY
CKP SIGNAL
2
1
3
F855
20
PK/YL
S152
(8W-70-9)
F855
20
PK/YL
K24
20
BR/LB
29
C2
35
C2
5 VOLT SUPPLY
CKP SIGNAL
V37
20
VT
6
C3
CLOCKSPRING
(8W-33-5)
6
C1
V37
20
VT
42
C100
V37
20
VT
34
C3
S/C SWITCH SIGNAL NO. 1
POWERTRAIN CONTROL MODULE

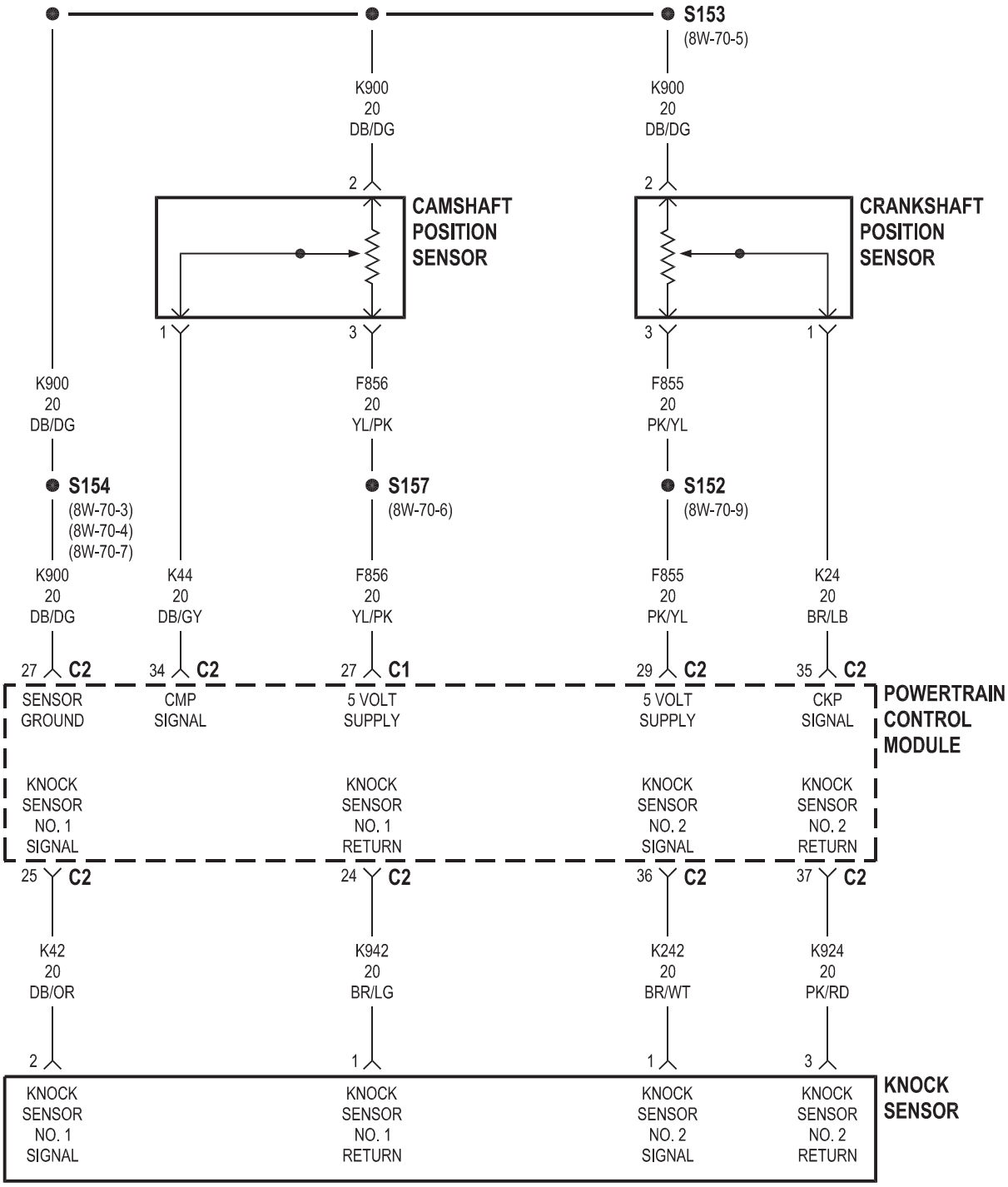
S153
(8W-70-5)
K900
20
DB/DG
K900
20
DB/DG
2
2
CAMSHAFT
POSITION
SENSOR
CRANKSHAFT
POSITION
SENSOR
1
3
3
1
K900
20
DB/DG
F856
20
YL/PK
F855
20
PK/YL
S154
(8W-70-3)
(8W-70-4)
(8W-70-7)
S157
(8W-70-6)
S152
(8W-70-9)
K900
20
DB/DG
K44
20
DB/GY
F856
20
YL/PK
F855
20
PK/YL
K24
20
BR/LB
27 C2
34 C2
27 C1
29 C2
35 C2
SENSOR
GROUND
CMP
SIGNAL
5 VOLT
SUPPLY
5 VOLT
SUPPLY
CKP
SIGNAL
POWERTRAIN
CONTROL
MODULE
KNOCK
SENSOR
NO. 1
SIGNAL
KNOCK
SENSOR
NO. 1
RETURN
KNOCK
SENSOR
NO. 2
SIGNAL
KNOCK
SENSOR
NO. 2
RETURN
25 C2
24 C2
36 C2
37 C2
K42
20
DB/OR
K942
20
BR/LG
K242
20
BR/WT
K924
20
PK/RD
2
1
1
3
KNOCK
SENSOR
NO. 1
SIGNAL
KNOCK
SENSOR
NO. 1
RETURN
KNOCK
SENSOR
NO. 2
SIGNAL
KNOCK
SENSOR
NO. 2
RETURN
KNOCK
SENSOR

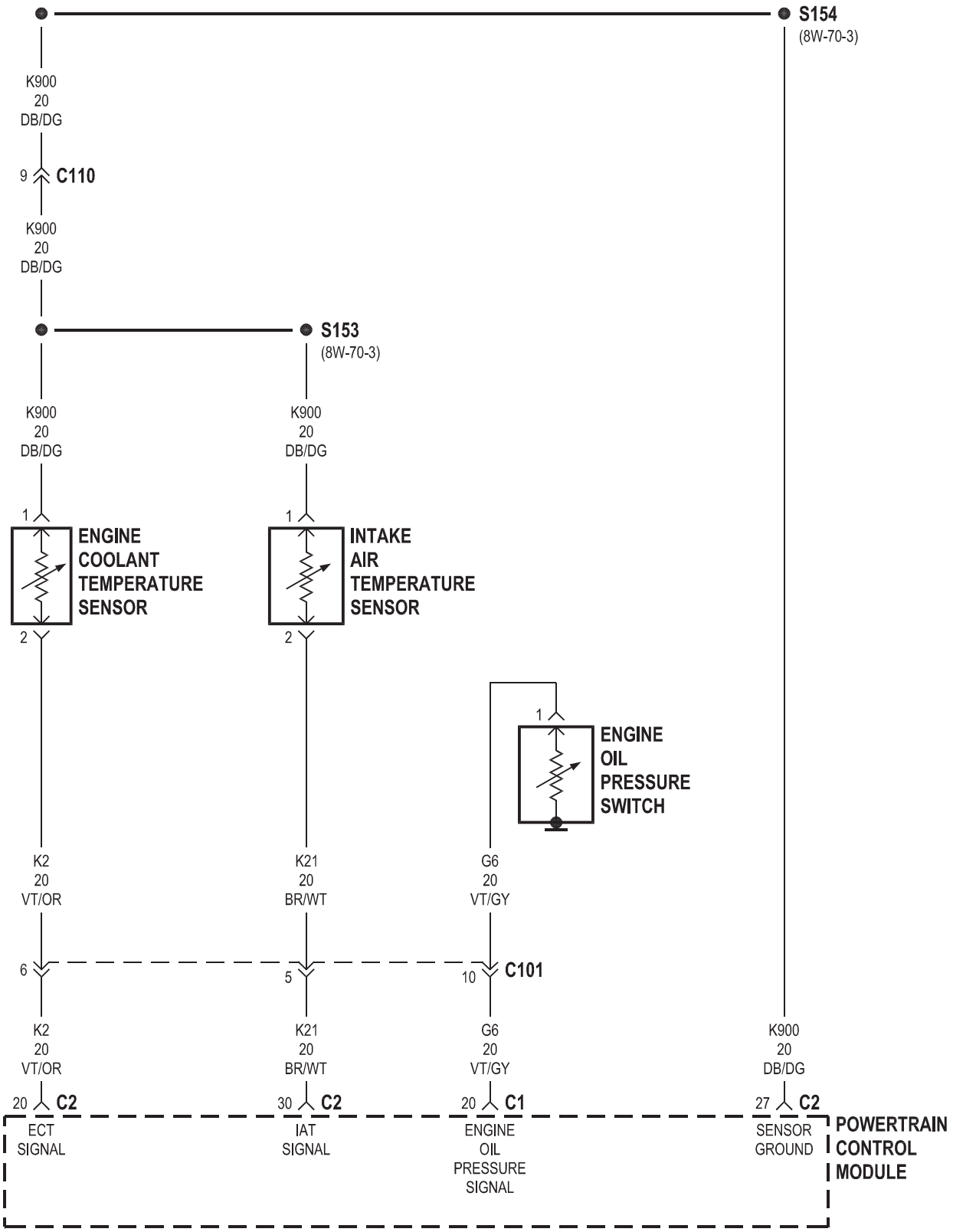
S154
(8W-70-3)
K900
20
DB/DG
9
C110
K900
20
DB/DG
S153
(8W-70-3)
K900
20
DB/DG
K900
20
DB/DG
1
ENGINE
COOLANT
TEMPERATURE
SENSOR
2
1
INTAKE
AIR
TEMPERATURE
SENSOR
2
1
ENGINE
OIL
PRESSURE
SWITCH
K2
20
VT/OR
K21
20
BR/WT
G6
20
VT/GY
6
5
10
C101
K2
20
VT/OR
K21
20
BR/WT
G6
20
VT/GY
K900
20
DB/DG
20
C2
30
C2
20
C1
27
C2
ECT
SIGNAL
IAT
SIGNAL
ENGINE
OIL
PRESSURE
SIGNAL
SENSOR
GROUND
POWERTRAIN
CONTROL
MODULE

2.4L

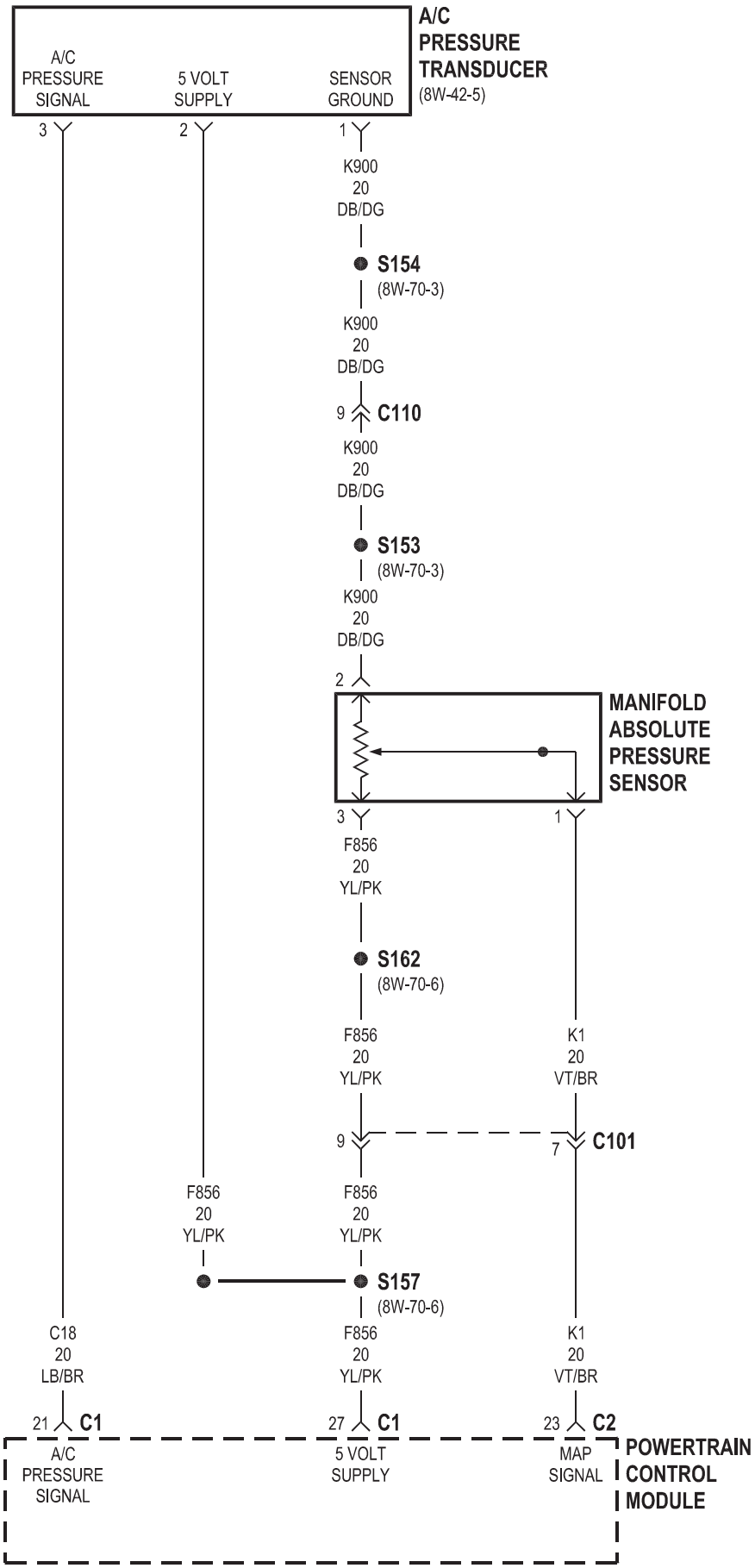
A/C PRESSURE TRANSDUCER
(8W-42-5)
A/C PRESSURE SIGNAL
5 VOLT SUPPLY
SENSOR GROUND
3
2
1
K900 20 DB/DG
S154
(8W-70-3)
K900 20 DB/DG
9
C110
K900 20 DB/DG
S153
(8W-70-3)
K900 20 DB/DG
2
MANIFOLD ABSOLUTE PRESSURE SENSOR
3
1
F856 20 YL/PK
S162
(8W-70-6)
F856 20 YL/PK
K1 20 VT/BR
9
7
C101
F856 20 YL/PK
F856 20 YL/PK
S157
(8W-70-6)
C18 20 LB/BR
F856 20 YL/PK
K1 20 VT/BR
21
C1
27
C1
23
C2
A/C PRESSURE SIGNAL
5 VOLT SUPPLY
MAP SIGNAL
POWERTRAIN CONTROL MODULE

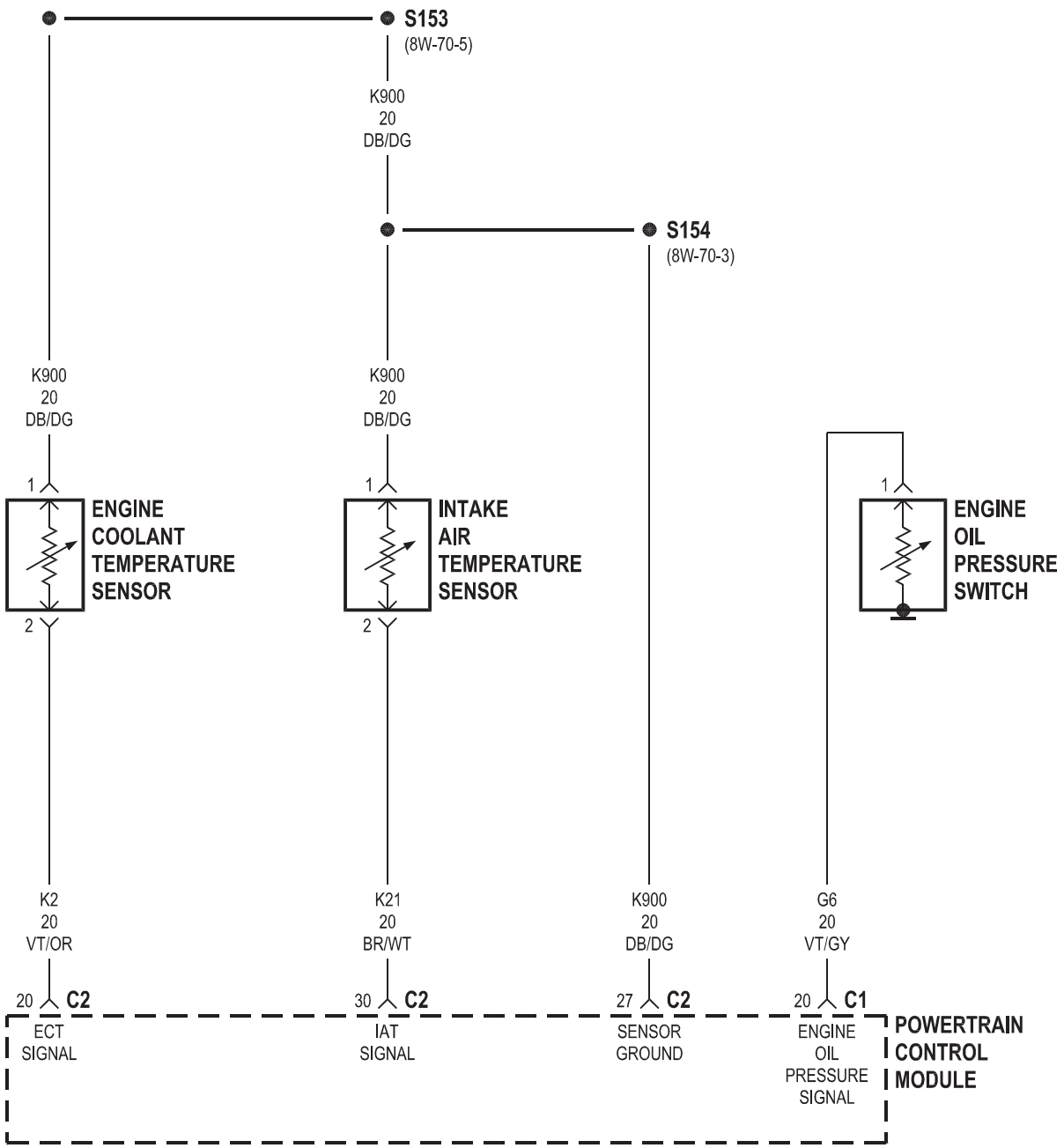
S153
(8W-70-5)
K900
20
DB/DG
S154
(8W-70-3)
K900
20
DB/DG
K900
20
DB/DG
1
2
ENGINE
COOLANT
TEMPERATURE
SENSOR
1
2
INTAKE
AIR
TEMPERATURE
SENSOR
1
ENGINE
OIL
PRESSURE
SWITCH
K2
20
VT/OR
K21
20
BR/WT
K900
20
DB/DG
G6
20
VT/GY
20 C2
ECT
SIGNAL
30 C2
IAT
SIGNAL
27 C2
SENSOR
GROUND
20 C1
ENGINE
OIL
PRESSURE
SIGNAL
POWERTRAIN
CONTROL
MODULE

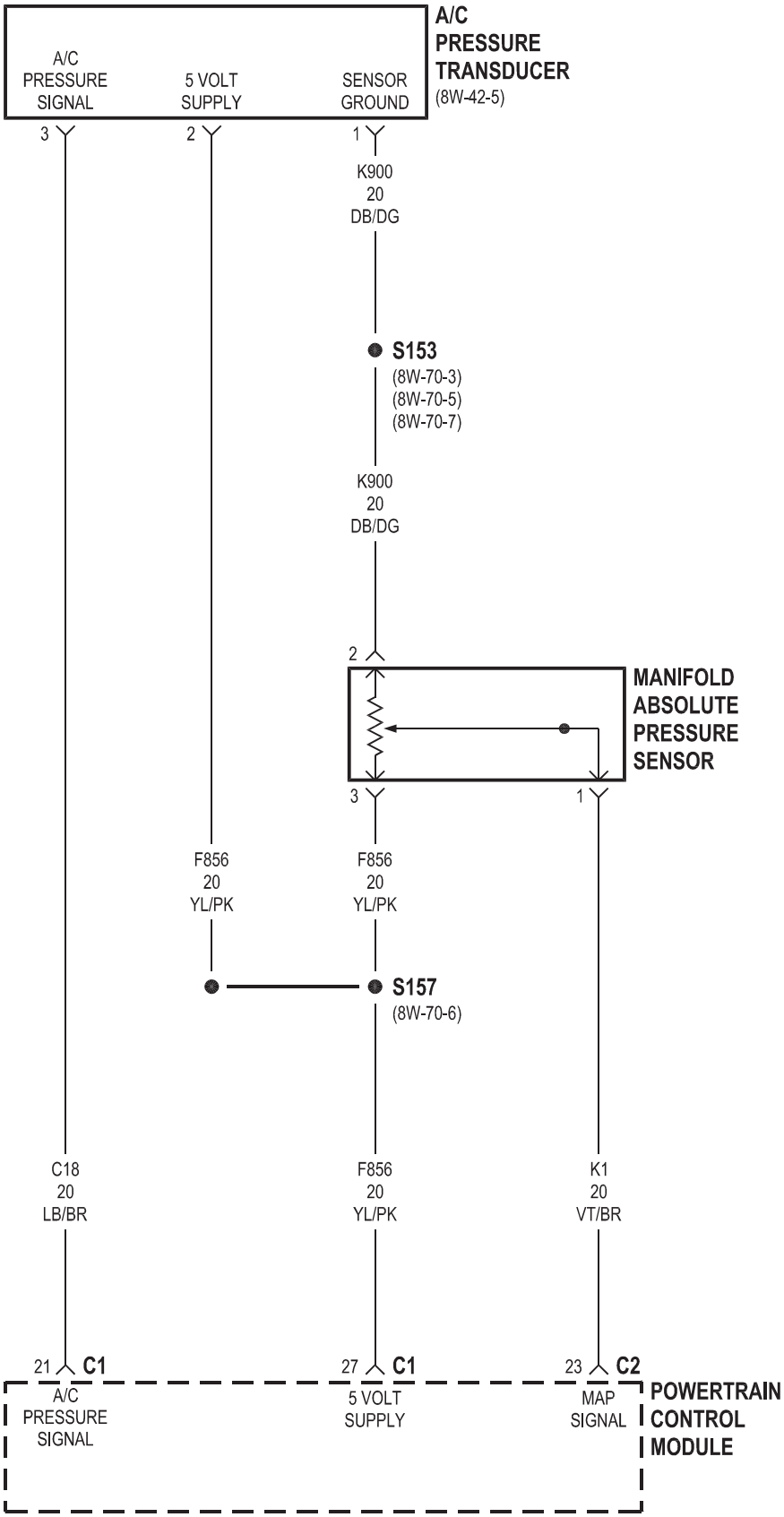
A/C PRESSURE TRANSDUCER
(8W-42-5)
A/C PRESSURE SIGNAL
5 VOLT SUPPLY
SENSOR GROUND
3
2
1
K900
20
DB/DG
S153
(8W-70-3)
(8W-70-5)
(8W-70-7)
K900
20
DB/DG
2
MANIFOLD ABSOLUTE PRESSURE SENSOR
3
1
F856
20
YL/PK
F856
20
YL/PK
S157
(8W-70-6)
C18
20
LB/BR
F856
20
YL/PK
K1
20
VT/BR
21
C1
27
C1
23
C2
A/C PRESSURE SIGNAL
5 VOLT SUPPLY
MAP SIGNAL
POWERTRAIN CONTROL MODULE

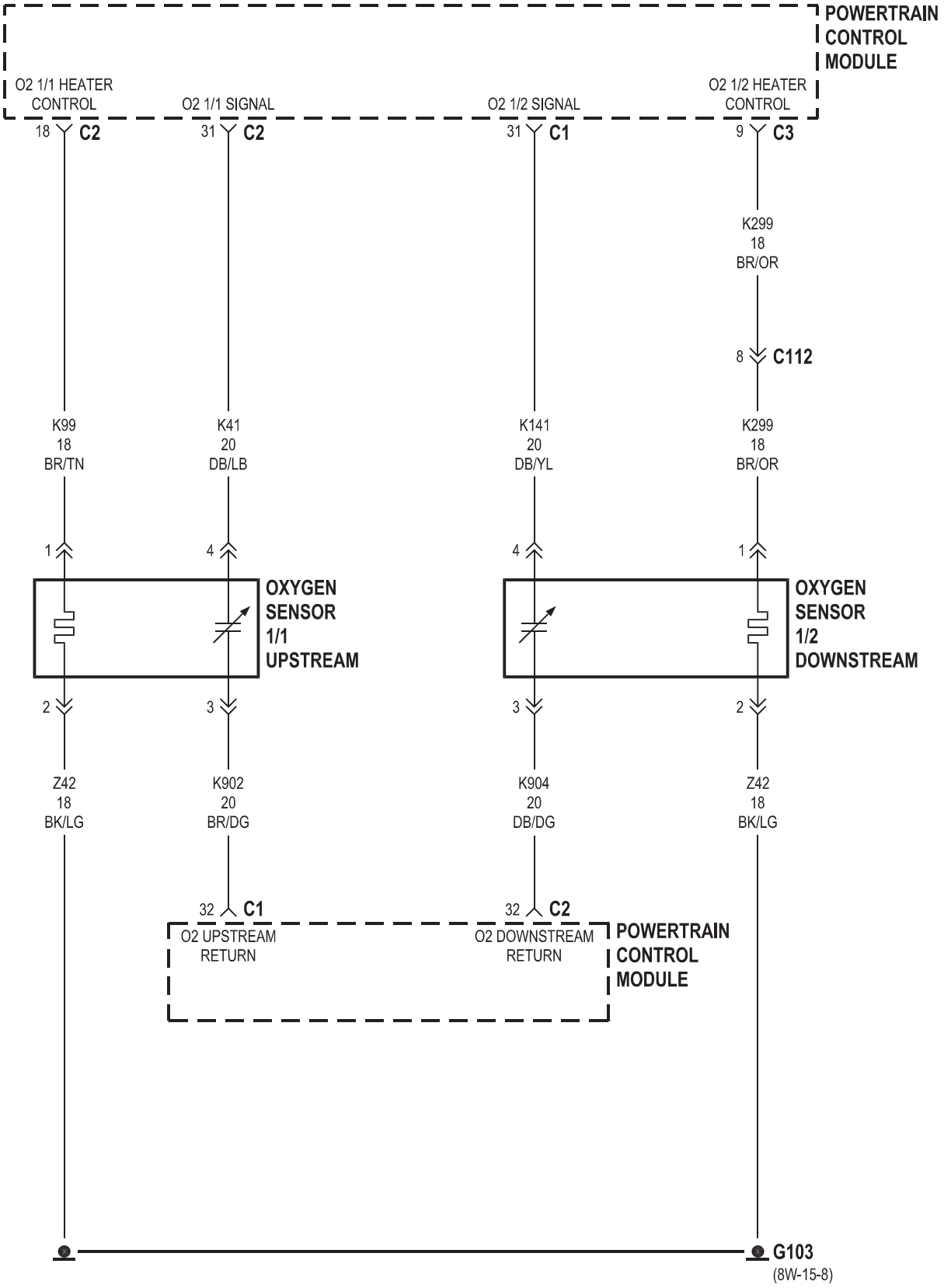
POWERTRAIN CONTROL MODULE
O2 1/1 HEATER CONTROL
O2 1/1 SIGNAL
O2 1/2 SIGNAL
O2 1/2 HEATER CONTROL
18 C2
31 C2
31 C1
9 C3
K299 18 BR/OR
8 C112
K99 18 BR/TN
K41 20 DB/LB
K141 20 DB/YL
K299 18 BR/OR
1
4
4
1
OXYGEN SENSOR 1/1 UPSTREAM
OXYGEN SENSOR 1/2 DOWNSTREAM
2
3
3
2
Z42 18 BK/LG
K902 20 BR/DG
K904 20 DB/DG
Z42 18 BK/LG
32 C1
32 C2
O2 UPSTREAM RETURN
O2 DOWNSTREAM RETURN
POWERTRAIN CONTROL MODULE
G103
(8W-15-8)

3.7L

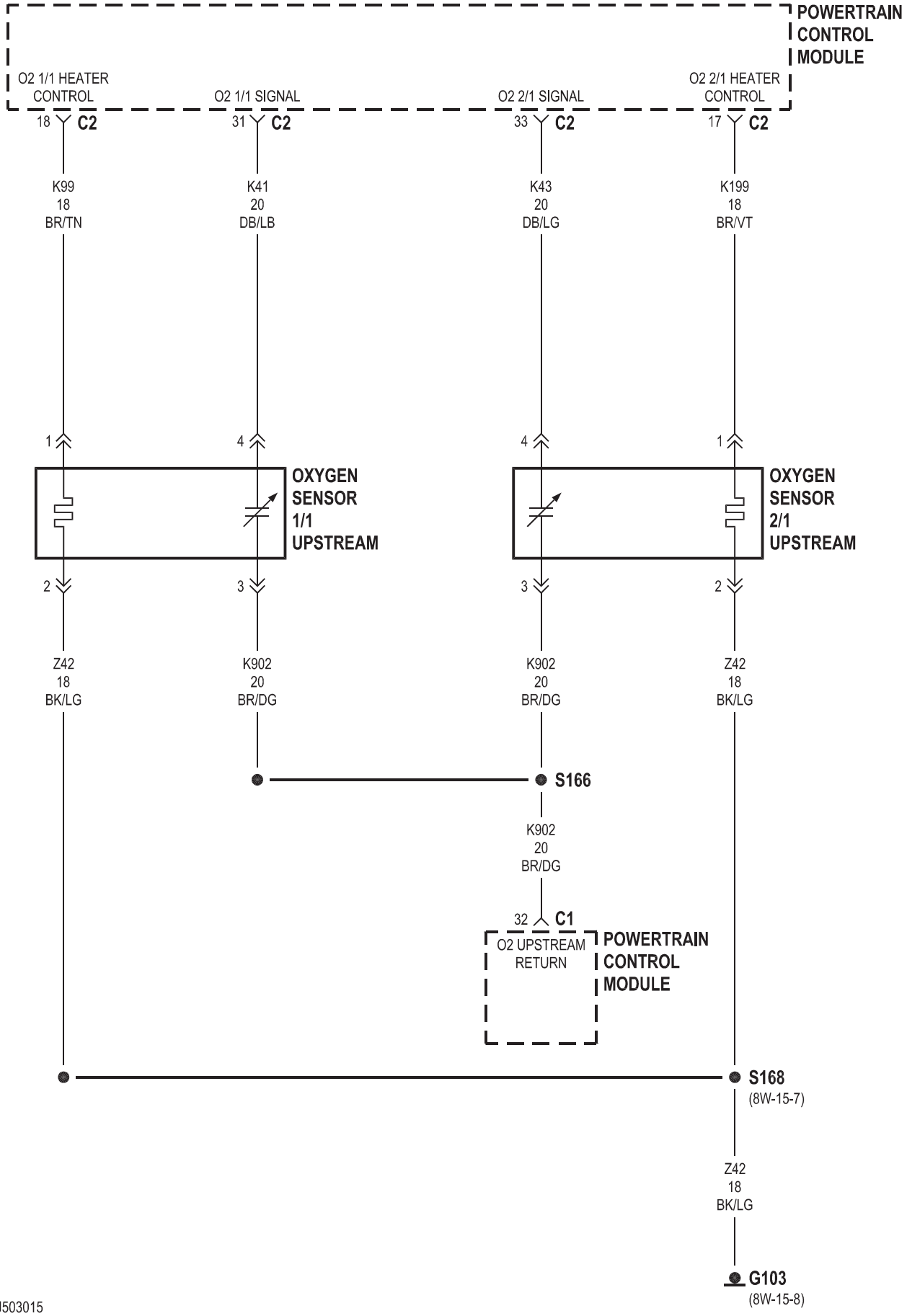
POWERTRAIN CONTROL MODULE
O2 1/1 HEATER CONTROL
O2 1/1 SIGNAL
O2 2/1 SIGNAL
O2 2/1 HEATER CONTROL
18 C2
31 C2
33 C2
17 C2
K99 18 BR/TN
K41 20 DB/LB
K43 20 DB/LG
K199 18 BR/VT
1
4
4
1
OXYGEN SENSOR 1/1 UPSTREAM
OXYGEN SENSOR 2/1 UPSTREAM
2
3
3
2
Z42 18 BK/LG
K902 20 BR/DG
K902 20 BR/DG
Z42 18 BK/LG
S166
K902 20 BR/DG
32 C1
O2 UPSTREAM RETURN
POWERTRAIN CONTROL MODULE
S168
(8W-15-7)
Z42 18 BK/LG
G103
(8W-15-8)

3.7L

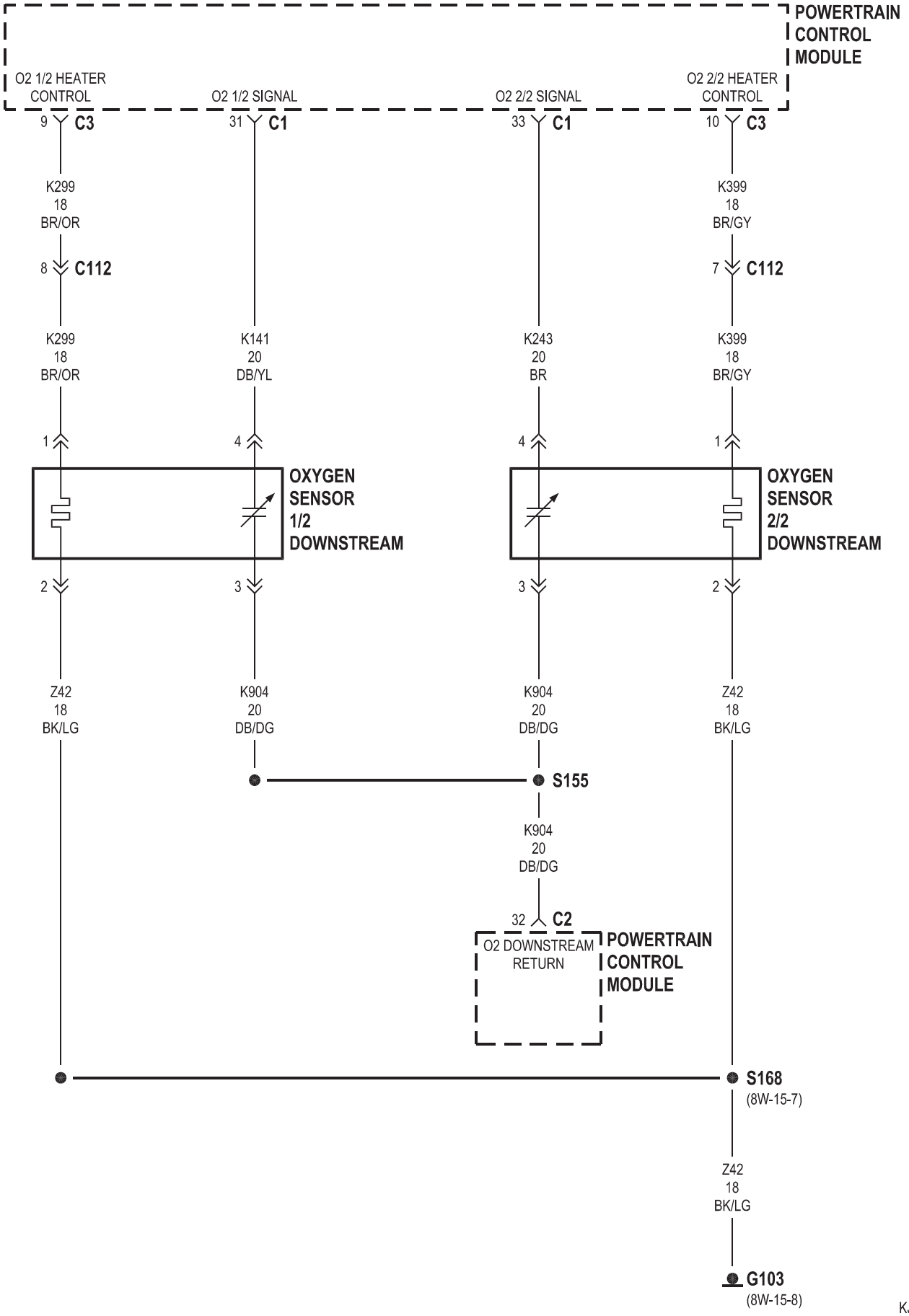
POWERTRAIN CONTROL MODULE
O2 1/2 HEATER CONTROL
O2 1/2 SIGNAL
O2 2/2 SIGNAL
O2 2/2 HEATER CONTROL
9 C3
31 C1
33 C1
10 C3
K299 18 BR/OR
K399 18 BR/GY
8 C112
7 C112
K299 18 BR/OR
K141 20 DB/YL
K243 20 BR
K399 18 BR/GY
1
4
4
1
OXYGEN SENSOR 1/2 DOWNSTREAM
OXYGEN SENSOR 2/2 DOWNSTREAM
2
3
3
2
Z42 18 BK/LG
K904 20 DB/DG
K904 20 DB/DG
Z42 18 BK/LG
S155
K904 20 DB/DG
32 C2
O2 DOWNSTREAM RETURN
POWERTRAIN CONTROL MODULE
S168
(8W-15-7)
Z42 18 BK/LG
G103
(8W-15-8)

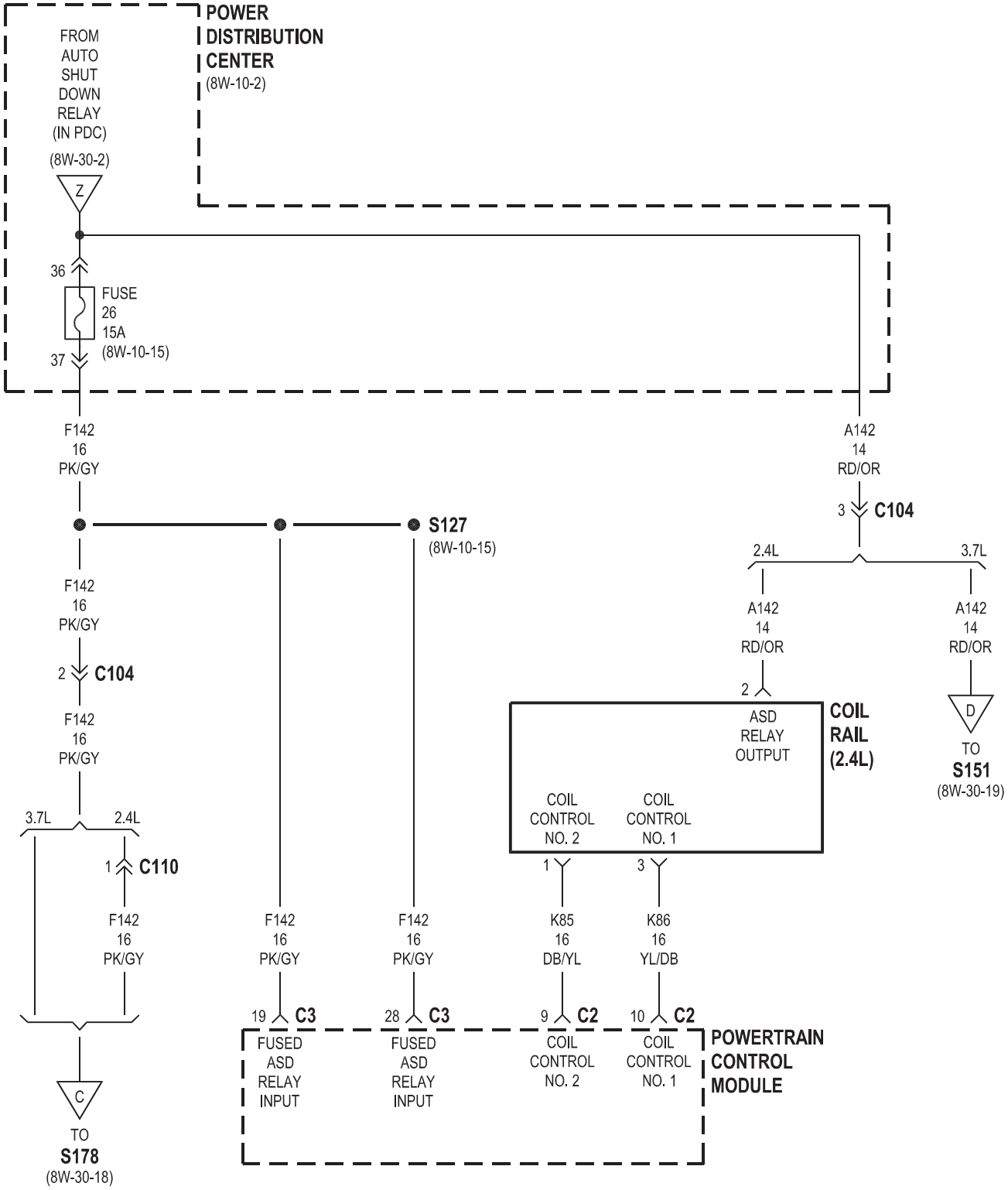
POWER DISTRIBUTION CENTER
(8W-10-2)
FROM AUTO SHUT DOWN RELAY (IN PDC)
(8W-30-2)
Z
36
FUSE 26 15A
(8W-10-15)
37
F142 16 PK/GY
A142 14 RD/OR
3
C104
S127
(8W-10-15)
2.4L
3.7L
A142 14 RD/OR
A142 14 RD/OR
F142 16 PK/GY
2
C104
2
ASD RELAY OUTPUT
COIL RAIL (2.4L)
D
TO S151
(8W-30-19)
F142 16 PK/GY
COIL CONTROL NO. 2
COIL CONTROL NO. 1
3.7L
2.4L
1
C110
1
3
F142 16 PK/GY
F142 16 PK/GY
F142 16 PK/GY
K85 16 DB/YL
K86 16 YL/DB
19
C3
28
C3
9
C2
10
C2
FUSED ASD RELAY INPUT
FUSED ASD RELAY INPUT
COIL CONTROL NO. 2
COIL CONTROL NO. 1
POWERTRAIN CONTROL MODULE
C
TO S178
(8W-30-18)

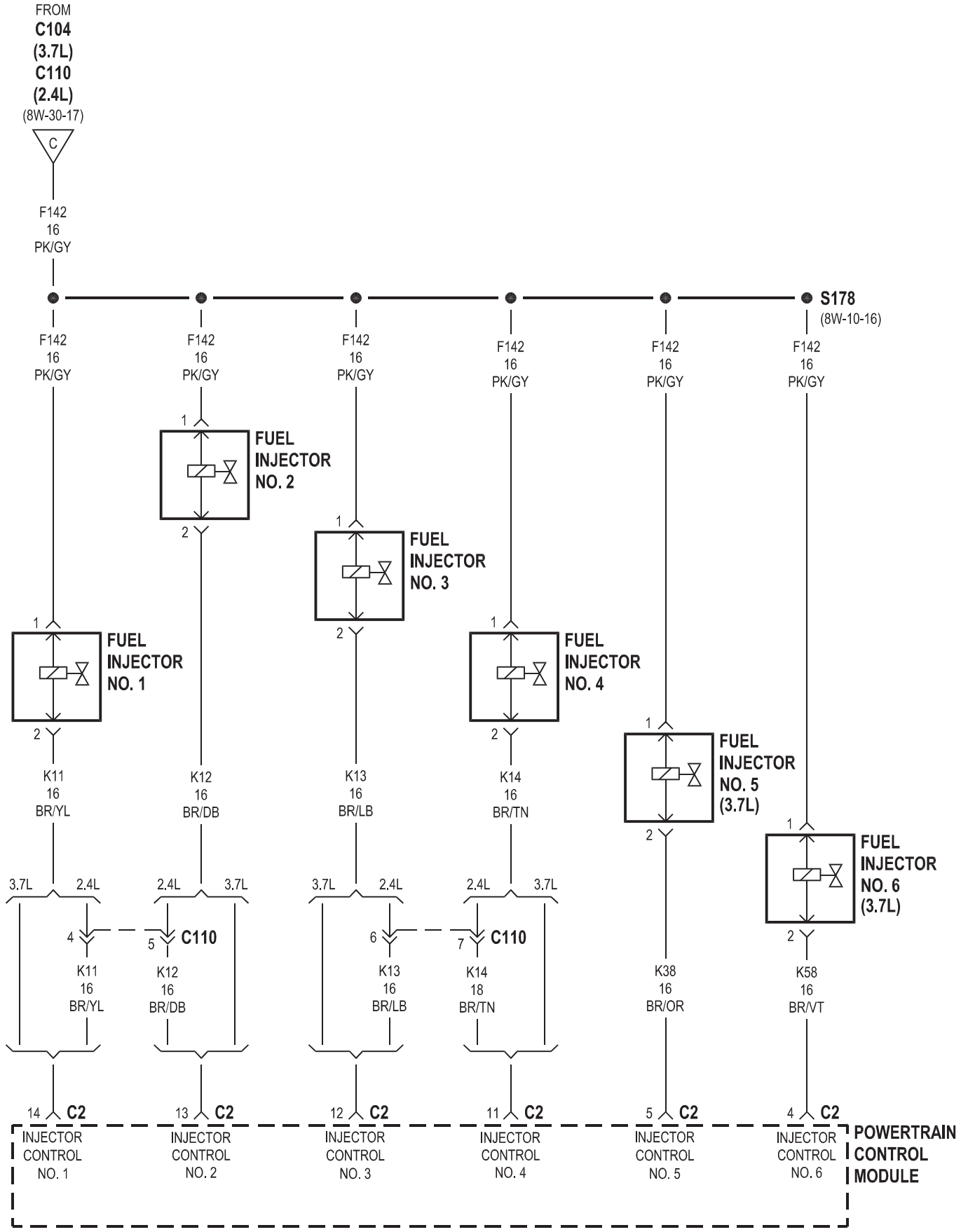
FROM
C104
(3.7L)
C110
(2.4L)
(8W-30-17)
C
F142
16
PK/GY
S178
(8W-10-16)
FUEL INJECTOR NO. 1
FUEL INJECTOR NO. 2
FUEL INJECTOR NO. 3
FUEL INJECTOR NO. 4
FUEL INJECTOR NO. 5 (3.7L)
FUEL INJECTOR NO. 6 (3.7L)
K11
16
BR/YL
K12
16
BR/DB
K13
16
BR/LB
K14
16
BR/TN
K38
16
BR/OR
K58
16
BR/VT
3.7L
2.4L
C110
K14
18
BR/TN
C2
INJECTOR CONTROL NO. 1
INJECTOR CONTROL NO. 2
INJECTOR CONTROL NO. 3
INJECTOR CONTROL NO. 4
INJECTOR CONTROL NO. 5
INJECTOR CONTROL NO. 6
POWERTRAIN CONTROL MODULE

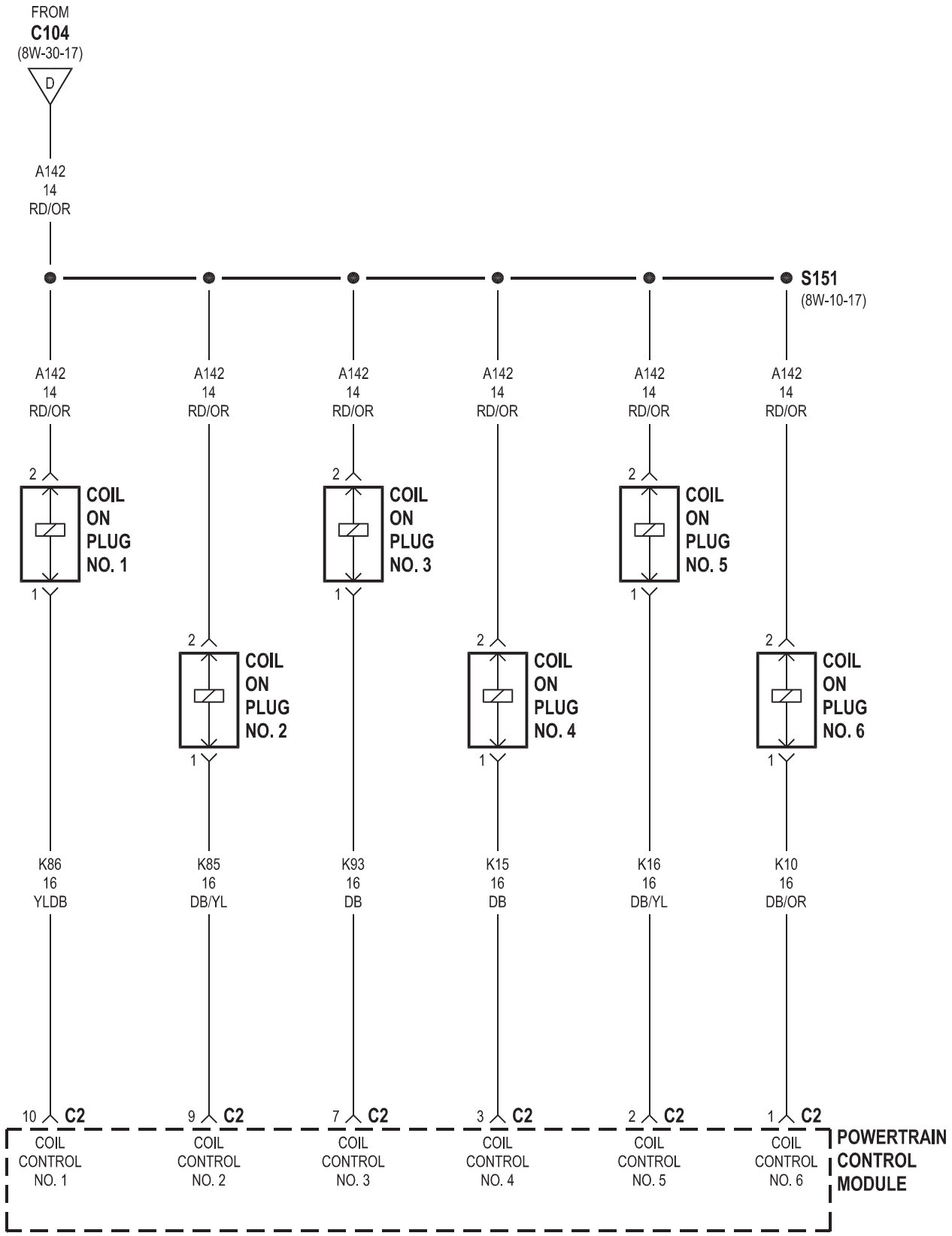
FROM
C104
(8W-30-17)
D
A142
14
RD/OR
S151
(8W-10-17)
A142
14
RD/OR
COIL ON PLUG NO. 1
COIL ON PLUG NO. 2
COIL ON PLUG NO. 3
COIL ON PLUG NO. 4
COIL ON PLUG NO. 5
COIL ON PLUG NO. 6
K86
16
YLDB
K85
16
DB/YL
K93
16
DB
K15
16
DB
K16
16
DB/YL
K10
16
DB/OR
10 C2
9 C2
7 C2
3 C2
2 C2
1 C2
COIL CONTROL NO. 1
COIL CONTROL NO. 2
COIL CONTROL NO. 3
COIL CONTROL NO. 4
COIL CONTROL NO. 5
COIL CONTROL NO. 6
POWERTRAIN CONTROL MODULE

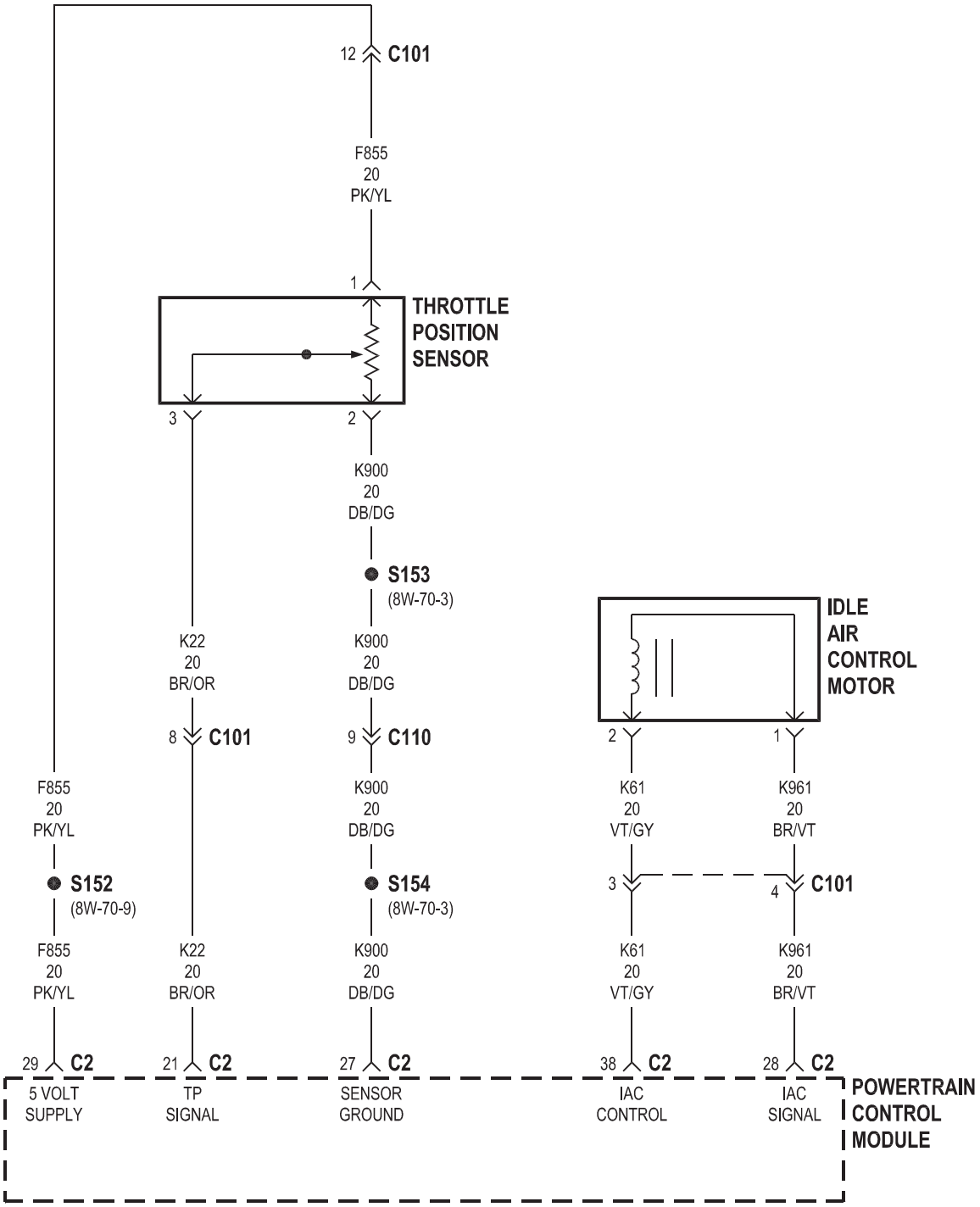
12 C101
F855
20
PK/YL
1
THROTTLE
POSITION
SENSOR
3
2
K900
20
DB/DG
S153
(8W-70-3)
K22
20
BR/OR
K900
20
DB/DG
IDLE
AIR
CONTROL
MOTOR
8 C101
9 C110
2
1
F855
20
PK/YL
K900
20
DB/DG
K61
20
VT/GY
K961
20
BR/VT
S152
(8W-70-9)
S154
(8W-70-3)
3
4 C101
F855
20
PK/YL
K22
20
BR/OR
K900
20
DB/DG
K61
20
VT/GY
K961
20
BR/VT
29 C2
21 C2
27 C2
38 C2
28 C2
5 VOLT
SUPPLY
TP
SIGNAL
SENSOR
GROUND
IAC
CONTROL
IAC
SIGNAL
POWERTRAIN
CONTROL
MODULE

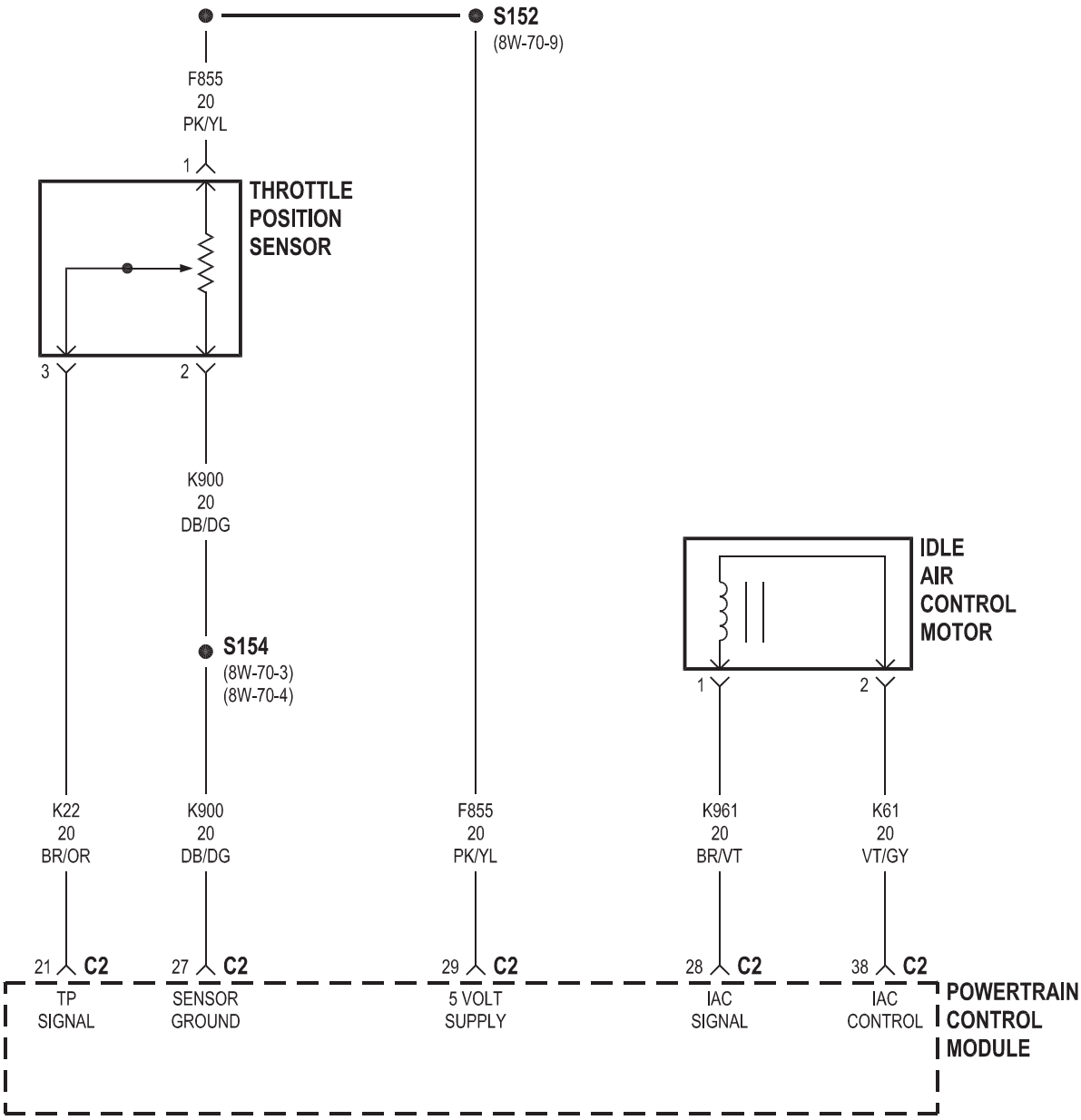
S152
(8W-70-9)
F855
20
PK/YL
1
THROTTLE
POSITION
SENSOR
3
2
K900
20
DB/DG
S154
(8W-70-3)
(8W-70-4)
IDLE
AIR
CONTROL
MOTOR
1
2
K22
20
BR/OR
K900
20
DB/DG
F855
20
PK/YL
K961
20
BR/VT
K61
20
VT/GY
21 C2
27 C2
29 C2
28 C2
38 C2
TP
SIGNAL
SENSOR
GROUND
5 VOLT
SUPPLY
IAC
SIGNAL
IAC
CONTROL
POWERTRAIN
CONTROL
MODULE

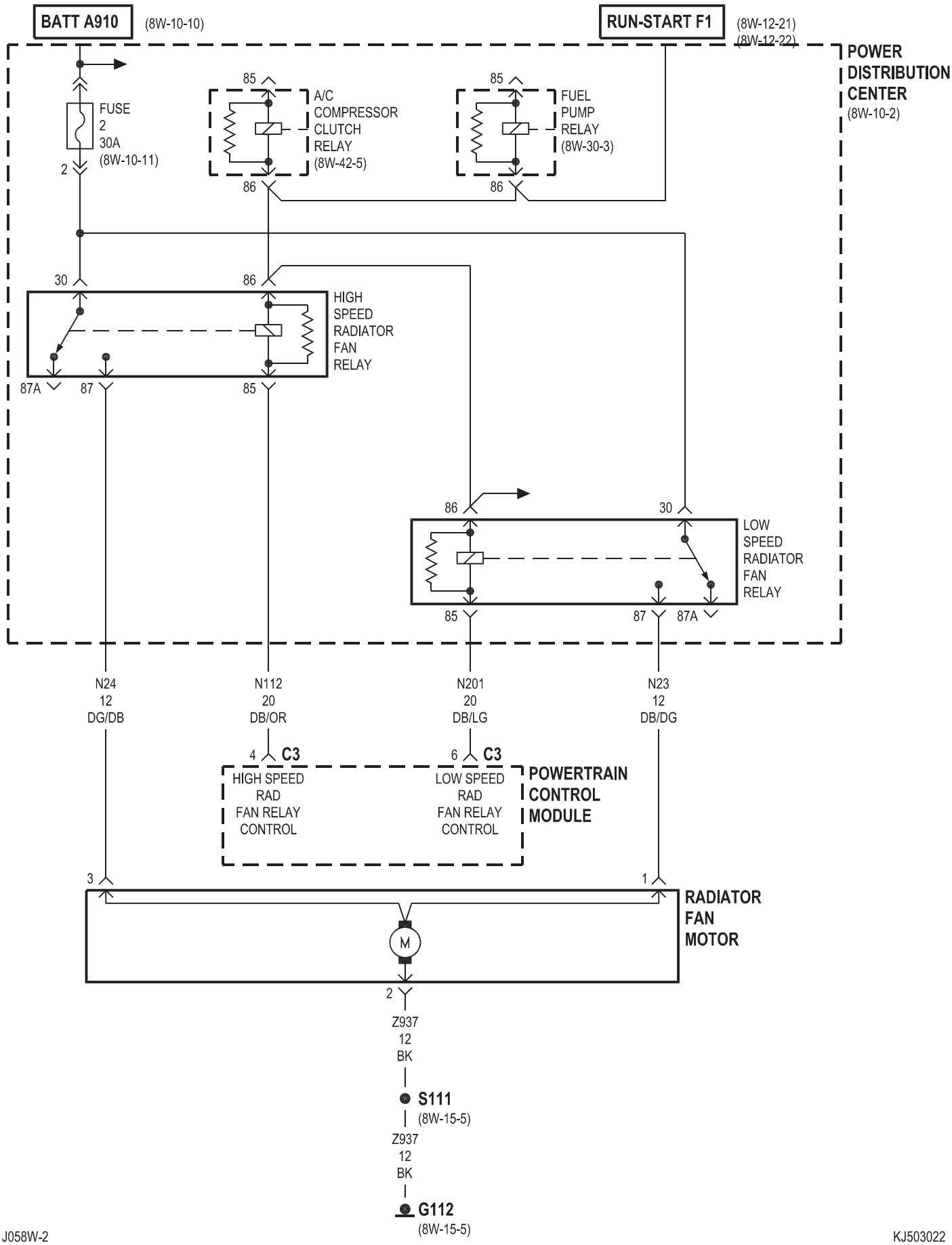
BATT A910
(8W-10-10)
RUN-START F1
(8W-12-21)
(8W-12-22)
POWER DISTRIBUTION CENTER
(8W-10-2)
FUSE 2 30A
(8W-10-11)
2
85
A/C COMPRESSOR CLUTCH RELAY
(8W-42-5)
86
85
FUEL PUMP RELAY
(8W-30-3)
86
30
86
HIGH SPEED RADIATOR FAN RELAY
87A
87
85
86
30
LOW SPEED RADIATOR FAN RELAY
85
87
87A
N24
12
DG/DB
N112
20
DB/OR
N201
20
DB/LG
N23
12
DB/DG
4
C3
6
C3
HIGH SPEED RAD FAN RELAY CONTROL
LOW SPEED RAD FAN RELAY CONTROL
POWERTRAIN CONTROL MODULE
3
1
M
RADIATOR FAN MOTOR
2
Z937
12
BK
S111
(8W-15-5)
Z937
12
BK
G112
(8W-15-5)

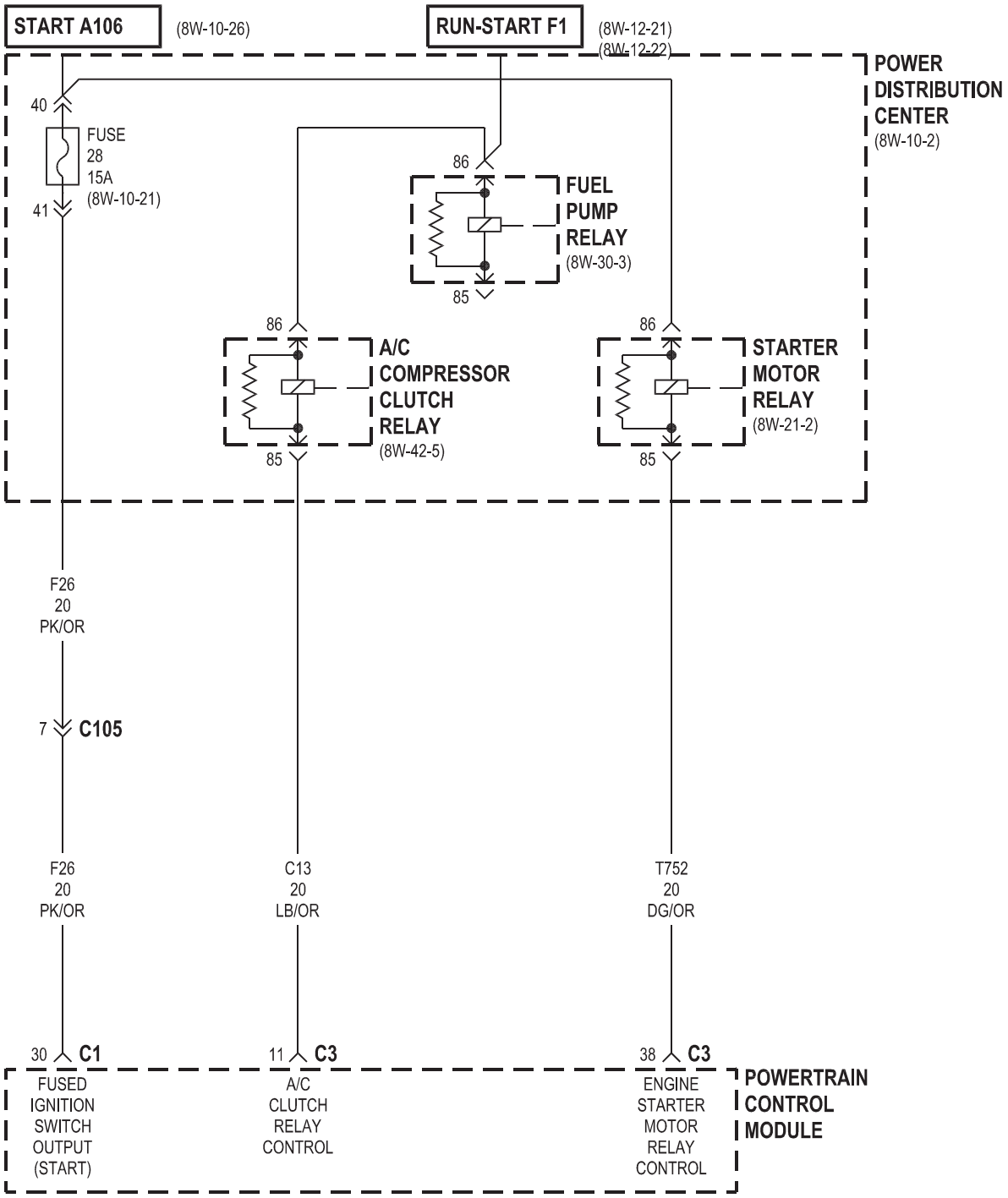
START A106
(8W-10-26)
RUN-START F1
(8W-12-21)
(8W-12-22)
POWER DISTRIBUTION CENTER
(8W-10-2)
40
FUSE
28
15A
(8W-10-21)
41
86
FUEL PUMP RELAY
(8W-30-3)
85
86
A/C COMPRESSOR CLUTCH RELAY
(8W-42-5)
85
86
STARTER MOTOR RELAY
(8W-21-2)
85
F26
20
PK/OR
7
C105
F26
20
PK/OR
C13
20
LB/OR
T752
20
DG/OR
30
C1
11
C3
38
C3
FUSED IGNITION SWITCH OUTPUT (START)
A/C CLUTCH RELAY CONTROL
ENGINE STARTER MOTOR RELAY CONTROL
POWERTRAIN CONTROL MODULE

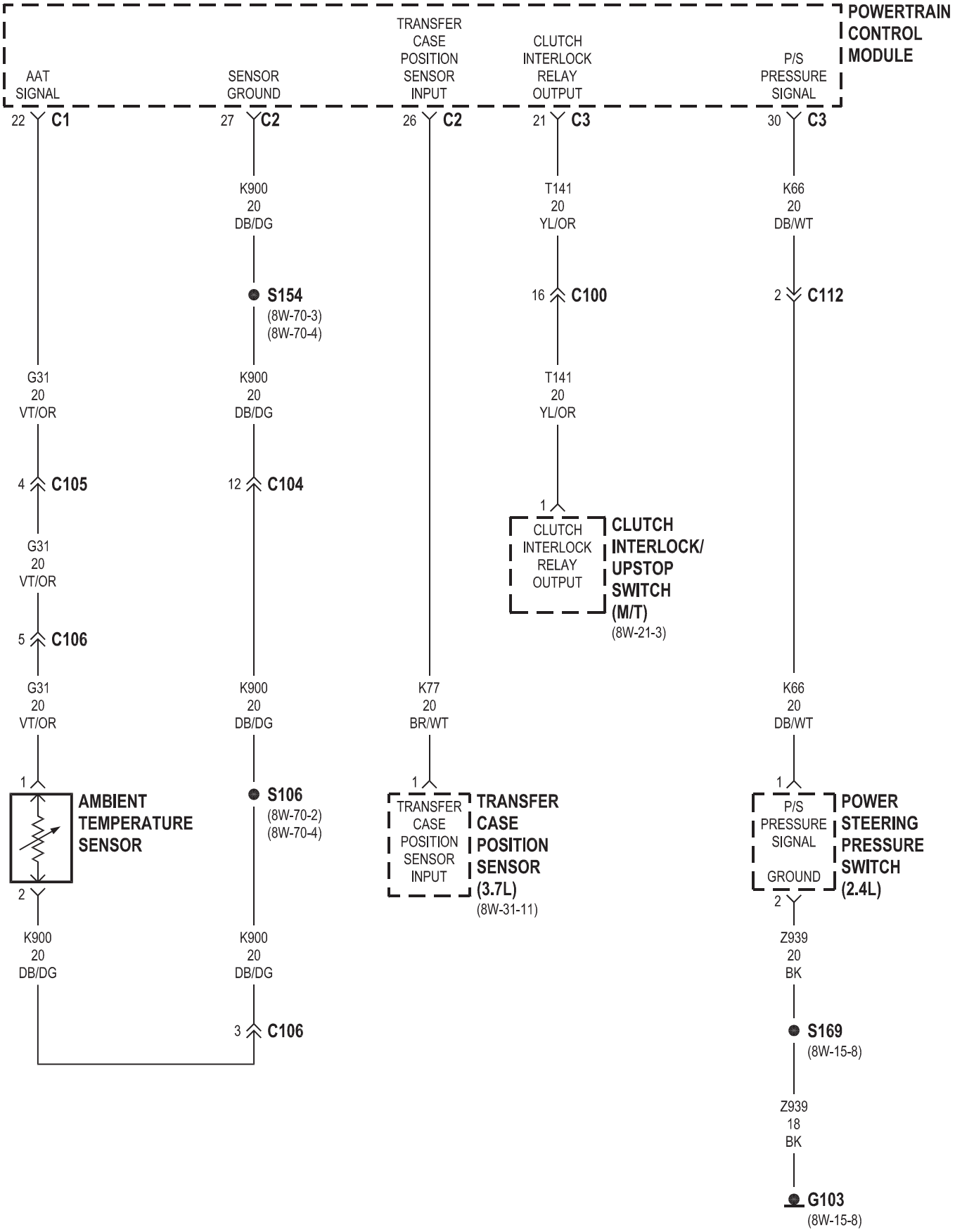
POWERTRAIN CONTROL MODULE
AAT SIGNAL
SENSOR GROUND
TRANSFER CASE POSITION SENSOR INPUT
CLUTCH INTERLOCK RELAY OUTPUT
P/S PRESSURE SIGNAL
22 C1
27 C2
26 C2
21 C3
30 C3
K900 20 DB/DG
T141 20 YL/OR
K66 20 DB/WT
S154 (8W-70-3) (8W-70-4)
16 C100
2 C112
G31 20 VT/OR
K900 20 DB/DG
T141 20 YL/OR
4 C105
12 C104
1
CLUTCH INTERLOCK RELAY OUTPUT
CLUTCH INTERLOCK/ UPSTOP SWITCH (M/T) (8W-21-3)
G31 20 VT/OR
5 C106
G31 20 VT/OR
K900 20 DB/DG
K77 20 BR/WT
K66 20 DB/WT
1
AMBIENT TEMPERATURE SENSOR
2
S106 (8W-70-2) (8W-70-4)
1
TRANSFER CASE POSITION SENSOR INPUT
TRANSFER CASE POSITION SENSOR (3.7L) (8W-31-11)
1
P/S PRESSURE SIGNAL
GROUND
POWER STEERING PRESSURE SWITCH (2.4L)
2
K900 20 DB/DG
K900 20 DB/DG
Z939 20 BK
3 C106
S169 (8W-15-8)
Z939 18 BK
G103 (8W-15-8)

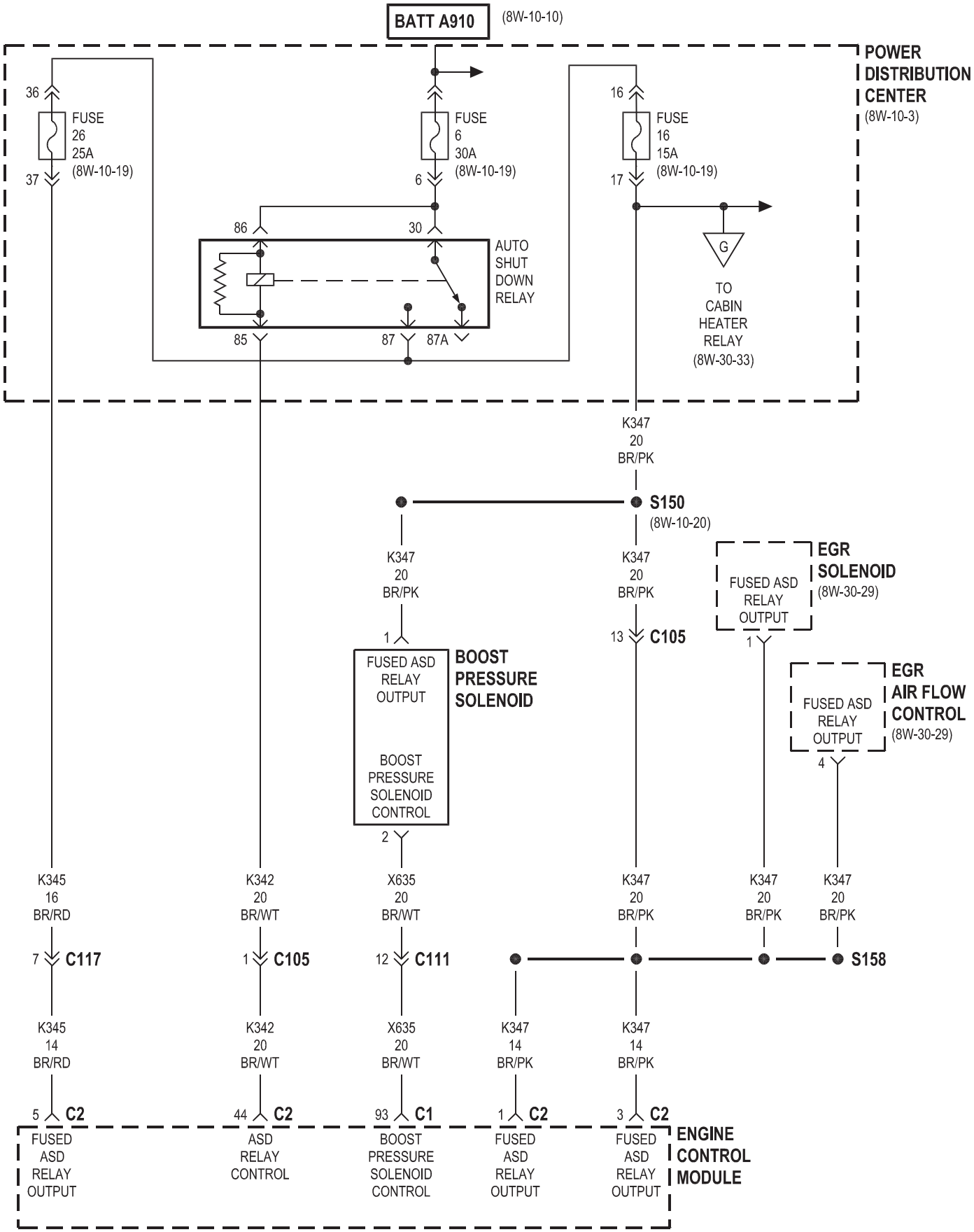
BATT A910
(8W-10-10)
POWER DISTRIBUTION CENTER
(8W-10-3)
36
FUSE 26 25A
(8W-10-19)
37
FUSE 6 30A
(8W-10-19)
6
16
FUSE 16 15A
(8W-10-19)
17
86
30
AUTO SHUT DOWN RELAY
85
87
87A
G
TO CABIN HEATER RELAY
(8W-30-33)
K347 20 BR/PK
S150
(8W-10-20)
K347 20 BR/PK
K347 20 BR/PK
FUSED ASD RELAY OUTPUT
EGR SOLENOID
(8W-30-29)
1
13
C105
1
FUSED ASD RELAY OUTPUT
BOOST PRESSURE SOLENOID
BOOST PRESSURE SOLENOID CONTROL
2
FUSED ASD RELAY OUTPUT
EGR AIR FLOW CONTROL
(8W-30-29)
4
K345 16 BR/RD
K342 20 BR/WT
X635 20 BR/WT
K347 20 BR/PK
K347 20 BR/PK
K347 20 BR/PK
7
C117
1
C105
12
C111
S158
K345 14 BR/RD
K342 20 BR/WT
X635 20 BR/WT
K347 14 BR/PK
K347 14 BR/PK
5
C2
44
C2
93
C1
1
C2
3
C2
FUSED ASD RELAY OUTPUT
ASD RELAY CONTROL
BOOST PRESSURE SOLENOID CONTROL
FUSED ASD RELAY OUTPUT
FUSED ASD RELAY OUTPUT
ENGINE CONTROL MODULE

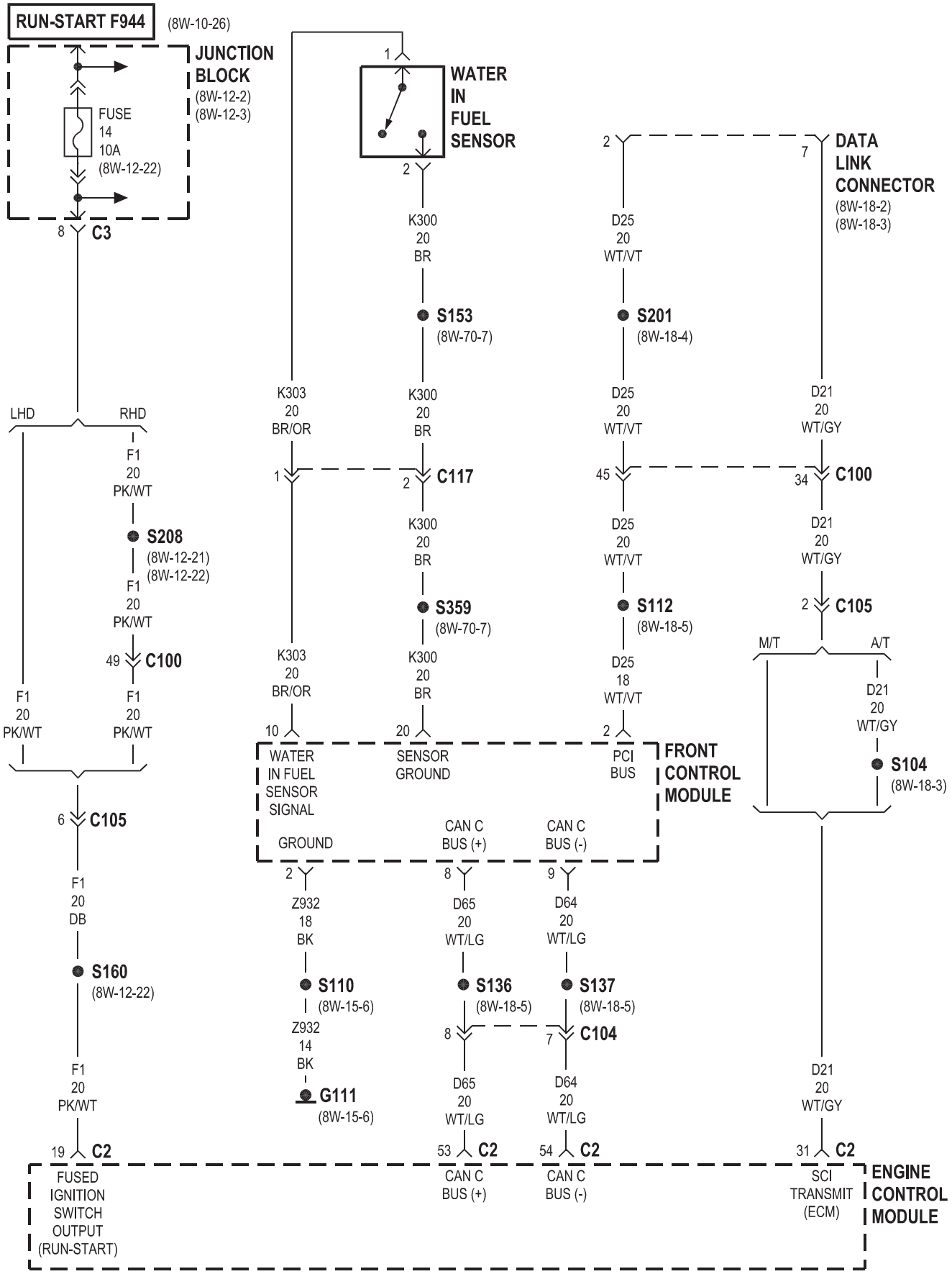
RUN-START F944
(8W-10-26)
JUNCTION BLOCK
(8W-12-2)
(8W-12-3)
FUSE 14 10A
(8W-12-22)
8 C3
WATER IN FUEL SENSOR
1
2
K300 20 BR
S153
(8W-70-7)
2
7
DATA LINK CONNECTOR
(8W-18-2)
(8W-18-3)
D25 20 WT/VT
S201
(8W-18-4)
LHD
RHD
F1 20 PK/WT
S208
(8W-12-21)
(8W-12-22)
F1 20 PK/WT
49 C100
F1 20 PK/WT
F1 20 PK/WT
6 C105
F1 20 DB
S160
(8W-12-22)
F1 20 PK/WT
19 C2
FUSED IGNITION SWITCH OUTPUT (RUN-START)
K303 20 BR/OR
1
K303 20 BR/OR
10
WATER IN FUEL SENSOR SIGNAL
GROUND
2
Z932 18 BK
S110
(8W-15-6)
Z932 14 BK
G111
(8W-15-6)
K300 20 BR
2 C117
K300 20 BR
S359
(8W-70-7)
K300 20 BR
20
SENSOR GROUND
CAN C BUS (+)
8
D65 20 WT/LG
S136
(8W-18-5)
8 C104
D65 20 WT/LG
53 C2
CAN C BUS (+)
D25 20 WT/VT
45
D25 20 WT/VT
S112
(8W-18-5)
D25 18 WT/VT
2
PCI BUS
CAN C BUS (-)
9
D64 20 WT/LG
S137
(8W-18-5)
7 C104
D64 20 WT/LG
54 C2
CAN C BUS (-)
FRONT CONTROL MODULE
D21 20 WT/GY
34 C100
D21 20 WT/GY
2 C105
M/T
A/T
D21 20 WT/GY
S104
(8W-18-3)
D21 20 WT/GY
31 C2
SCI TRANSMIT (ECM)
ENGINE CONTROL MODULE

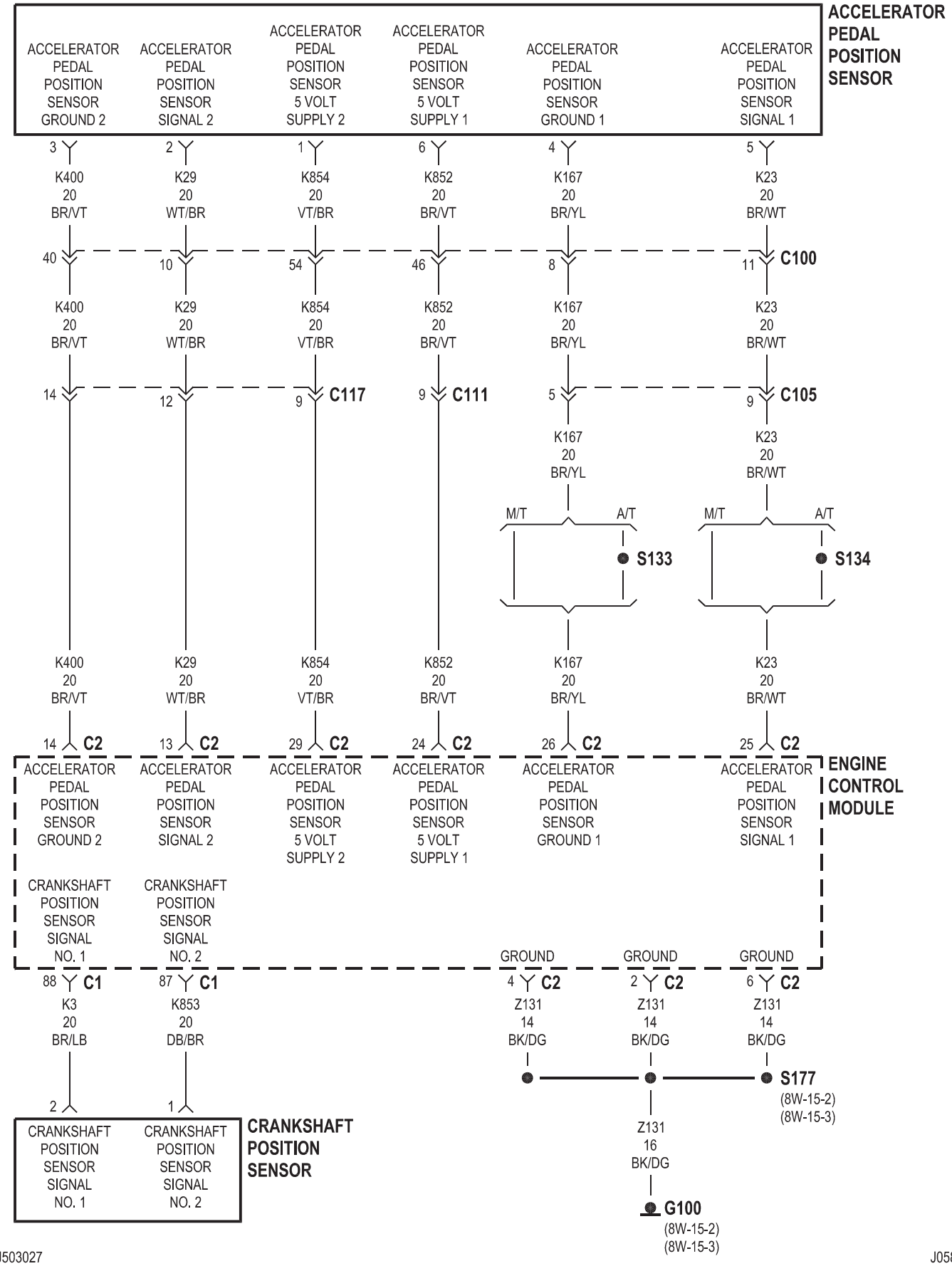
ACCELERATOR PEDAL POSITION SENSOR
ACCELERATOR PEDAL POSITION SENSOR GROUND 2
ACCELERATOR PEDAL POSITION SENSOR SIGNAL 2
ACCELERATOR PEDAL POSITION SENSOR 5 VOLT SUPPLY 2
ACCELERATOR PEDAL POSITION SENSOR 5 VOLT SUPPLY 1
ACCELERATOR PEDAL POSITION SENSOR GROUND 1
ACCELERATOR PEDAL POSITION SENSOR SIGNAL 1
3 K400 20 BR/VT
2 K29 20 WT/BR
1 K854 20 VT/BR
6 K852 20 BR/VT
4 K167 20 BR/YL
5 K23 20 BR/WT
40 K400 20 BR/VT
10 K29 20 WT/BR
54 K854 20 VT/BR
46 K852 20 BR/VT
8 K167 20 BR/YL
11 C100 K23 20 BR/WT
14 K400 20 BR/VT
12 K29 20 WT/BR
9 C117 K854 20 VT/BR
9 C111 K852 20 BR/VT
5 K167 20 BR/YL
9 C105 K23 20 BR/WT
M/T A/T S133
M/T A/T S134
K400 20 BR/VT
K29 20 WT/BR
K854 20 VT/BR
K852 20 BR/VT
K167 20 BR/YL
K23 20 BR/WT
14 C2
13 C2
29 C2
24 C2
26 C2
25 C2
ENGINE CONTROL MODULE
ACCELERATOR PEDAL POSITION SENSOR GROUND 2
ACCELERATOR PEDAL POSITION SENSOR SIGNAL 2
ACCELERATOR PEDAL POSITION SENSOR 5 VOLT SUPPLY 2
ACCELERATOR PEDAL POSITION SENSOR 5 VOLT SUPPLY 1
ACCELERATOR PEDAL POSITION SENSOR GROUND 1
ACCELERATOR PEDAL POSITION SENSOR SIGNAL 1
CRANKSHAFT POSITION SENSOR SIGNAL NO. 1
CRANKSHAFT POSITION SENSOR SIGNAL NO. 2
GROUND
GROUND
GROUND
88 C1 K3 20 BR/LB
87 C1 K853 20 DB/BR
4 C2 Z131 14 BK/DG
2 C2 Z131 14 BK/DG
6 C2 Z131 14 BK/DG
S177
(8W-15-2)
(8W-15-3)
2
1
CRANKSHAFT POSITION SENSOR SIGNAL NO. 1
CRANKSHAFT POSITION SENSOR SIGNAL NO. 2
CRANKSHAFT POSITION SENSOR
Z131 16 BK/DG
G100
(8W-15-2)
(8W-15-3)

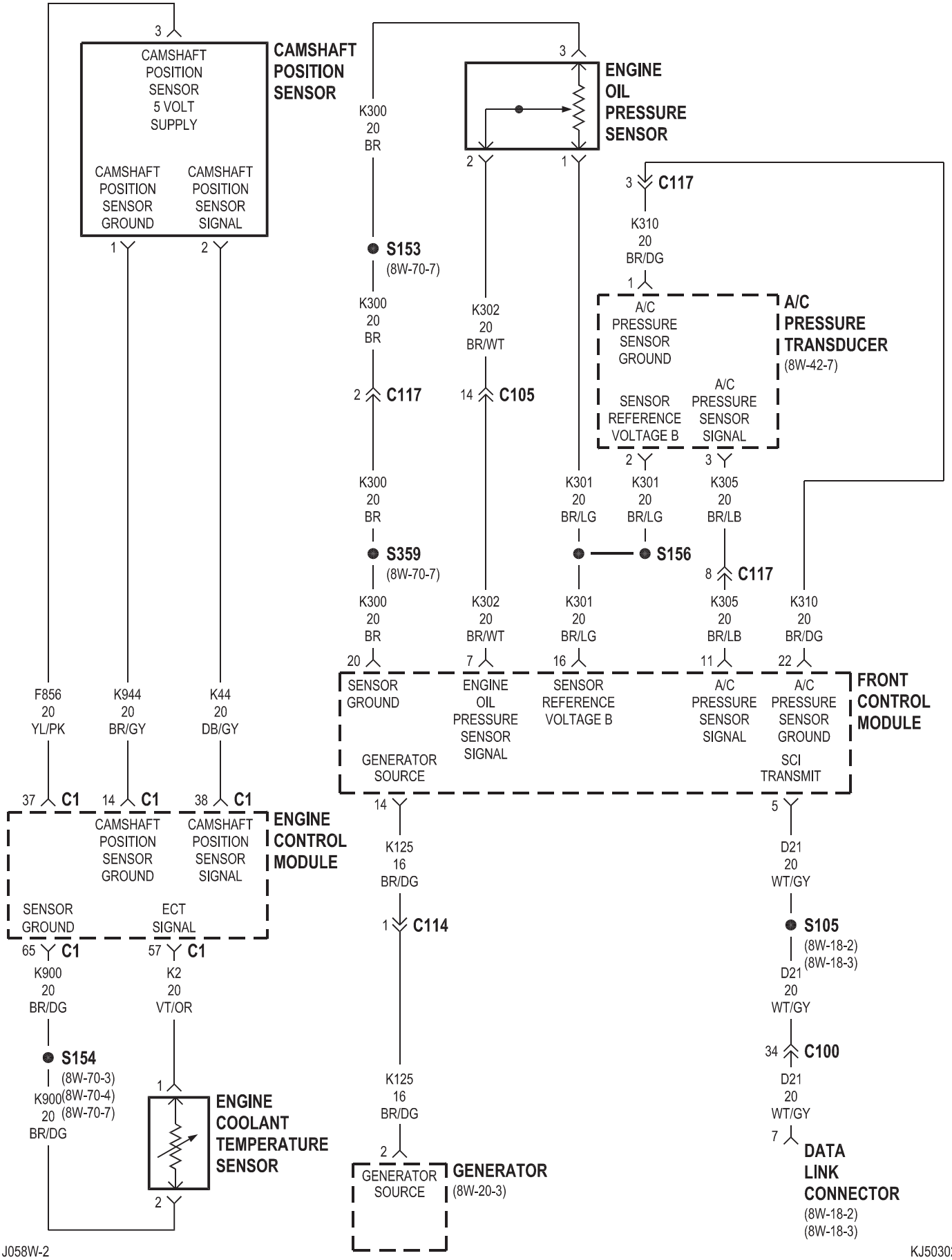
CAMSHAFT POSITION SENSOR
CAMSHAFT POSITION SENSOR 5 VOLT SUPPLY
CAMSHAFT POSITION SENSOR GROUND
CAMSHAFT POSITION SENSOR SIGNAL
ENGINE OIL PRESSURE SENSOR
S153 (8W-70-7)
S359 (8W-70-7)
C117
C105
A/C PRESSURE SENSOR GROUND
SENSOR REFERENCE VOLTAGE B
A/C PRESSURE SENSOR SIGNAL
A/C PRESSURE TRANSDUCER (8W-42-7)
S156
K300 20 BR
K302 20 BR/WT
K301 20 BR/LG
K305 20 BR/LB
K310 20 BR/DG
SENSOR GROUND
ENGINE OIL PRESSURE SENSOR SIGNAL
SENSOR REFERENCE VOLTAGE B
A/C PRESSURE SENSOR SIGNAL
A/C PRESSURE SENSOR GROUND
GENERATOR SOURCE
SCI TRANSMIT
FRONT CONTROL MODULE
F856 20 YL/PK
K944 20 BR/GY
K44 20 DB/GY
C1
CAMSHAFT POSITION SENSOR GROUND
CAMSHAFT POSITION SENSOR SIGNAL
SENSOR GROUND
ECT SIGNAL
ENGINE CONTROL MODULE
K900 20 BR/DG
K2 20 VT/OR
S154 (8W-70-3) (8W-70-4) (8W-70-7)
ENGINE COOLANT TEMPERATURE SENSOR
K125 16 BR/DG
C114
GENERATOR SOURCE
GENERATOR (8W-20-3)
D21 20 WT/GY
S105 (8W-18-2) (8W-18-3)
C100
DATA LINK CONNECTOR (8W-18-2) (8W-18-3)

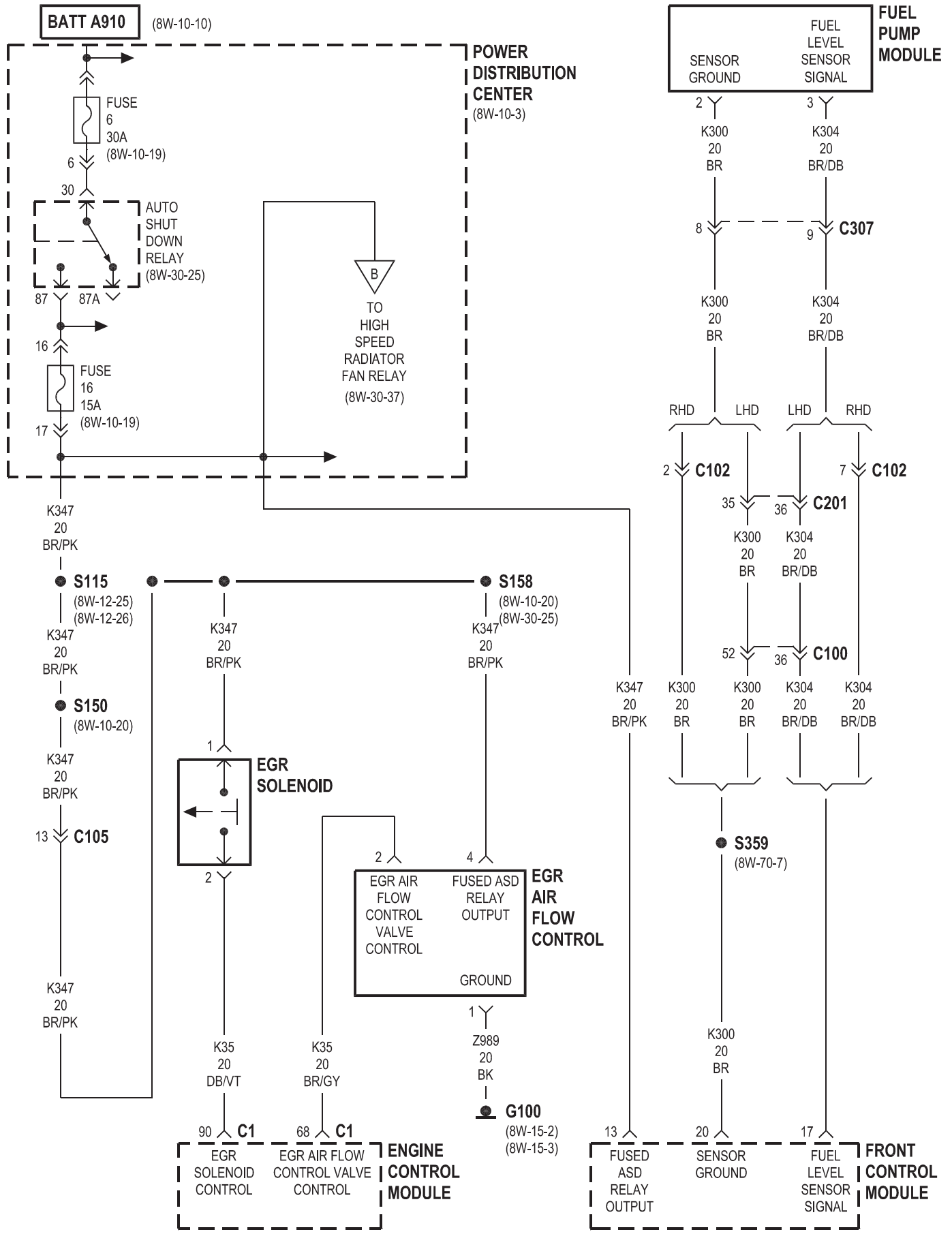
BATT A910
(8W-10-10)
POWER DISTRIBUTION CENTER
(8W-10-3)
FUSE 6 30A
(8W-10-19)
AUTO SHUT DOWN RELAY
(8W-30-25)
FUSE 16 15A
(8W-10-19)
TO HIGH SPEED RADIATOR FAN RELAY
(8W-30-37)
FUEL PUMP MODULE
SENSOR GROUND
FUEL LEVEL SENSOR SIGNAL
K300 20 BR
K304 20 BR/DB
C307
RHD
LHD
C102
C201
C100
K347 20 BR/PK
S115
(8W-12-25)
(8W-12-26)
S158
(8W-10-20)
(8W-30-25)
S150
(8W-10-20)
C105
EGR SOLENOID
EGR AIR FLOW CONTROL VALVE CONTROL
FUSED ASD RELAY OUTPUT
GROUND
EGR AIR FLOW CONTROL
S359
(8W-70-7)
Z989 20 BK
G100
(8W-15-2)
(8W-15-3)
K35 20 DB/VT
K35 20 BR/GY
EGR SOLENOID CONTROL
EGR AIR FLOW CONTROL VALVE CONTROL
ENGINE CONTROL MODULE
FUSED ASD RELAY OUTPUT
SENSOR GROUND
FUEL LEVEL SENSOR SIGNAL
FRONT CONTROL MODULE

DIESEL

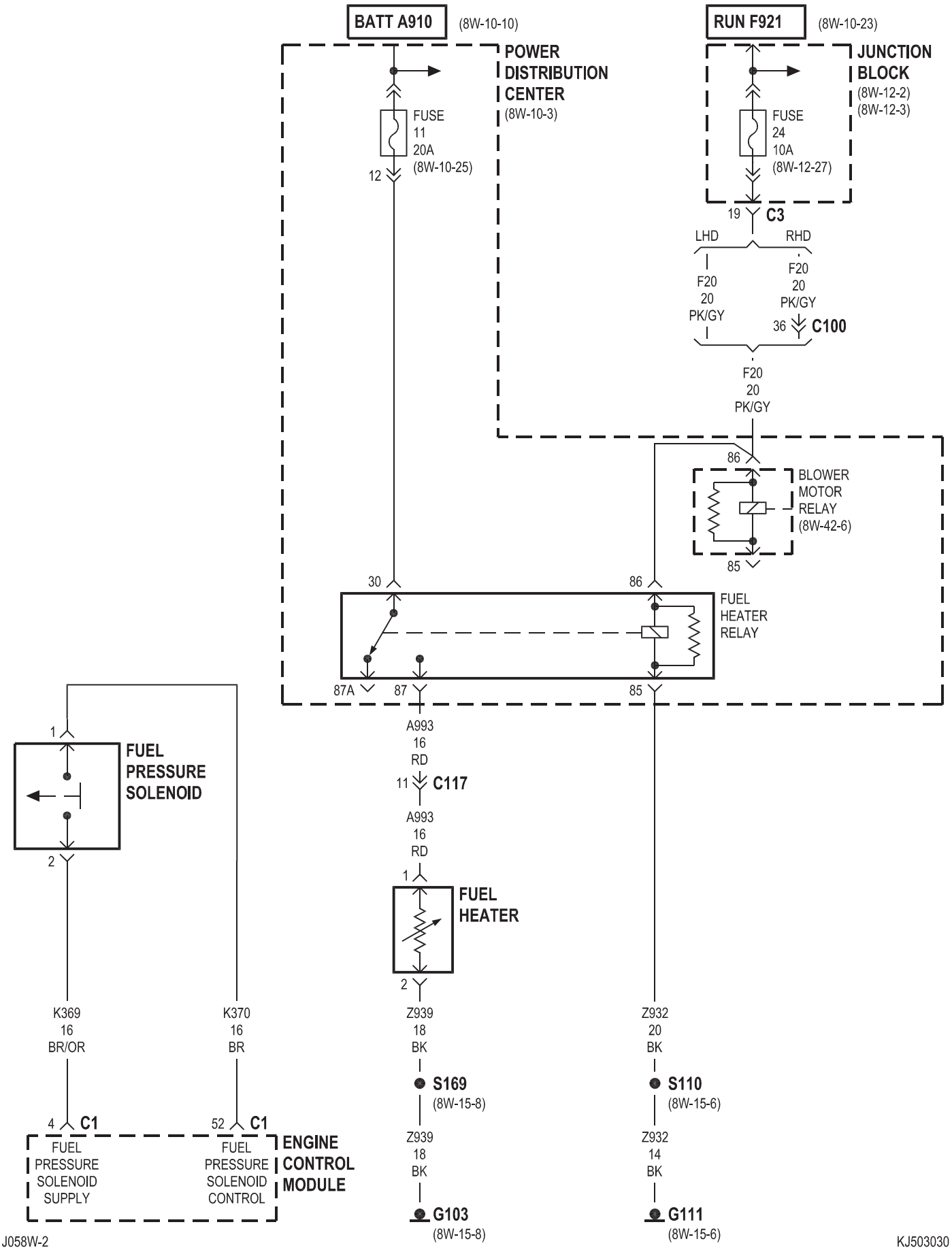
BATT A910
(8W-10-10)
RUN F921
(8W-10-23)
POWER DISTRIBUTION CENTER
(8W-10-3)
JUNCTION BLOCK
(8W-12-2)
(8W-12-3)
FUSE 11 20A
(8W-10-25)
FUSE 24 10A
(8W-12-27)
12
19
C3
LHD
RHD
F20 20 PK/GY
F20 20 PK/GY
36
C100
F20 20 PK/GY
86
BLOWER MOTOR RELAY
(8W-42-6)
85
30
86
FUEL HEATER RELAY
87A
87
85
A993 16 RD
11
C117
A993 16 RD
1
FUEL PRESSURE SOLENOID
2
1
FUEL HEATER
2
K369 16 BR/OR
K370 16 BR
Z939 18 BK
Z932 20 BK
S169
(8W-15-8)
S110
(8W-15-6)
4
C1
52
C1
FUEL PRESSURE SOLENOID SUPPLY
FUEL PRESSURE SOLENOID CONTROL
ENGINE CONTROL MODULE
Z939 18 BK
Z932 14 BK
G103
(8W-15-8)
G111
(8W-15-6)

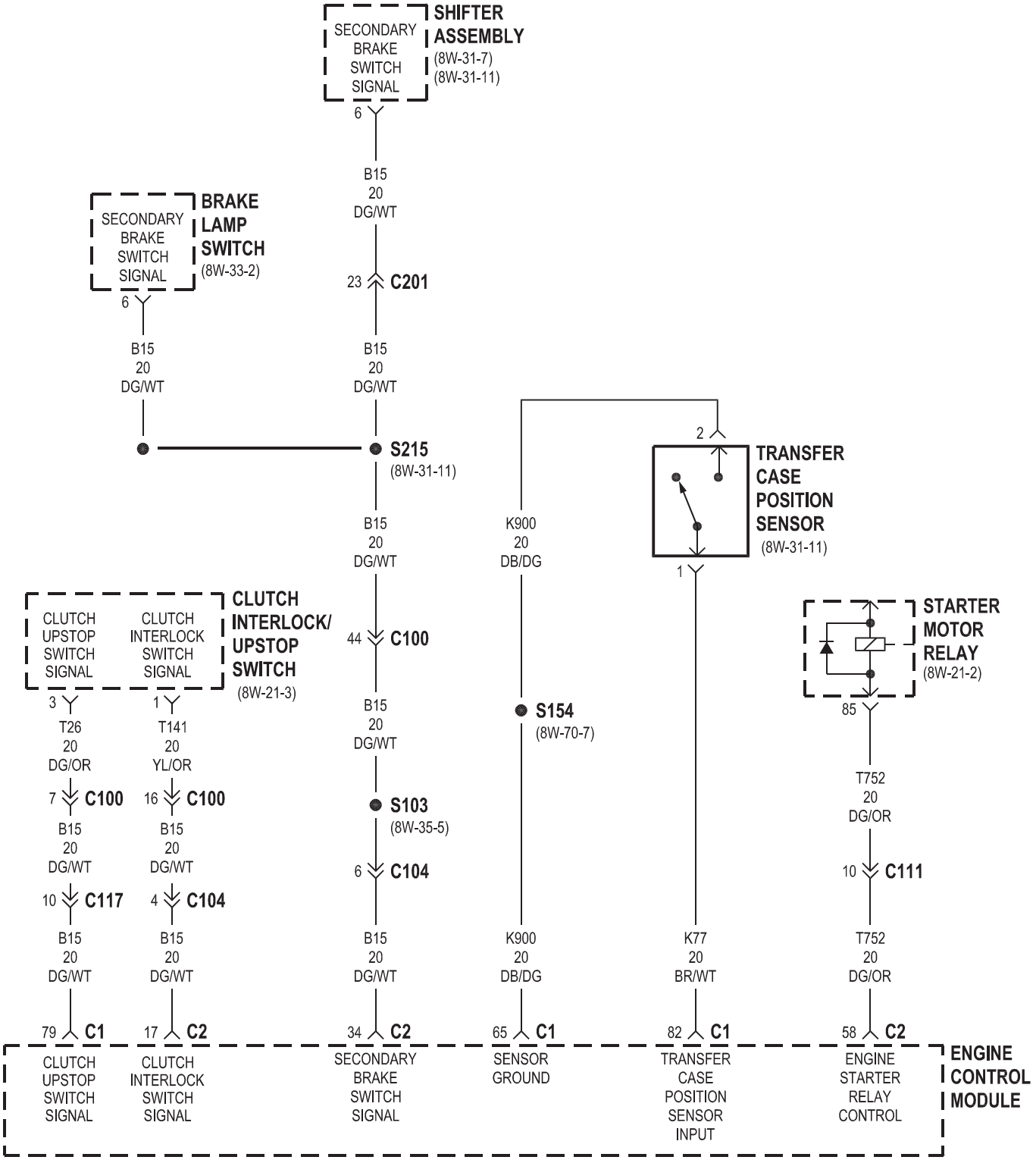
SECONDARY BRAKE SWITCH SIGNAL
SHIFTER ASSEMBLY
(8W-31-7)
(8W-31-11)
6
B15
20
DG/WT
SECONDARY BRAKE SWITCH SIGNAL
BRAKE LAMP SWITCH
(8W-33-2)
6
23
C201
B15
20
DG/WT
B15
20
DG/WT
S215
(8W-31-11)
B15
20
DG/WT
K900
20
DB/DG
2
TRANSFER CASE POSITION SENSOR
(8W-31-11)
1
CLUTCH UPSTOP SWITCH SIGNAL
CLUTCH INTERLOCK SWITCH SIGNAL
CLUTCH INTERLOCK/ UPSTOP SWITCH
(8W-21-3)
44
C100
STARTER MOTOR RELAY
(8W-21-2)
3
T26
20
DG/OR
1
T141
20
YL/OR
B15
20
DG/WT
S154
(8W-70-7)
85
T752
20
DG/OR
7
C100
16
C100
S103
(8W-35-5)
B15
20
DG/WT
B15
20
DG/WT
6
C104
10
C111
10
C117
4
C104
B15
20
DG/WT
B15
20
DG/WT
B15
20
DG/WT
K900
20
DB/DG
K77
20
BR/WT
T752
20
DG/OR
79
C1
17
C2
34
C2
65
C1
82
C1
58
C2
CLUTCH UPSTOP SWITCH SIGNAL
CLUTCH INTERLOCK SWITCH SIGNAL
SECONDARY BRAKE SWITCH SIGNAL
SENSOR GROUND
TRANSFER CASE POSITION SENSOR INPUT
ENGINE STARTER RELAY CONTROL
ENGINE CONTROL MODULE

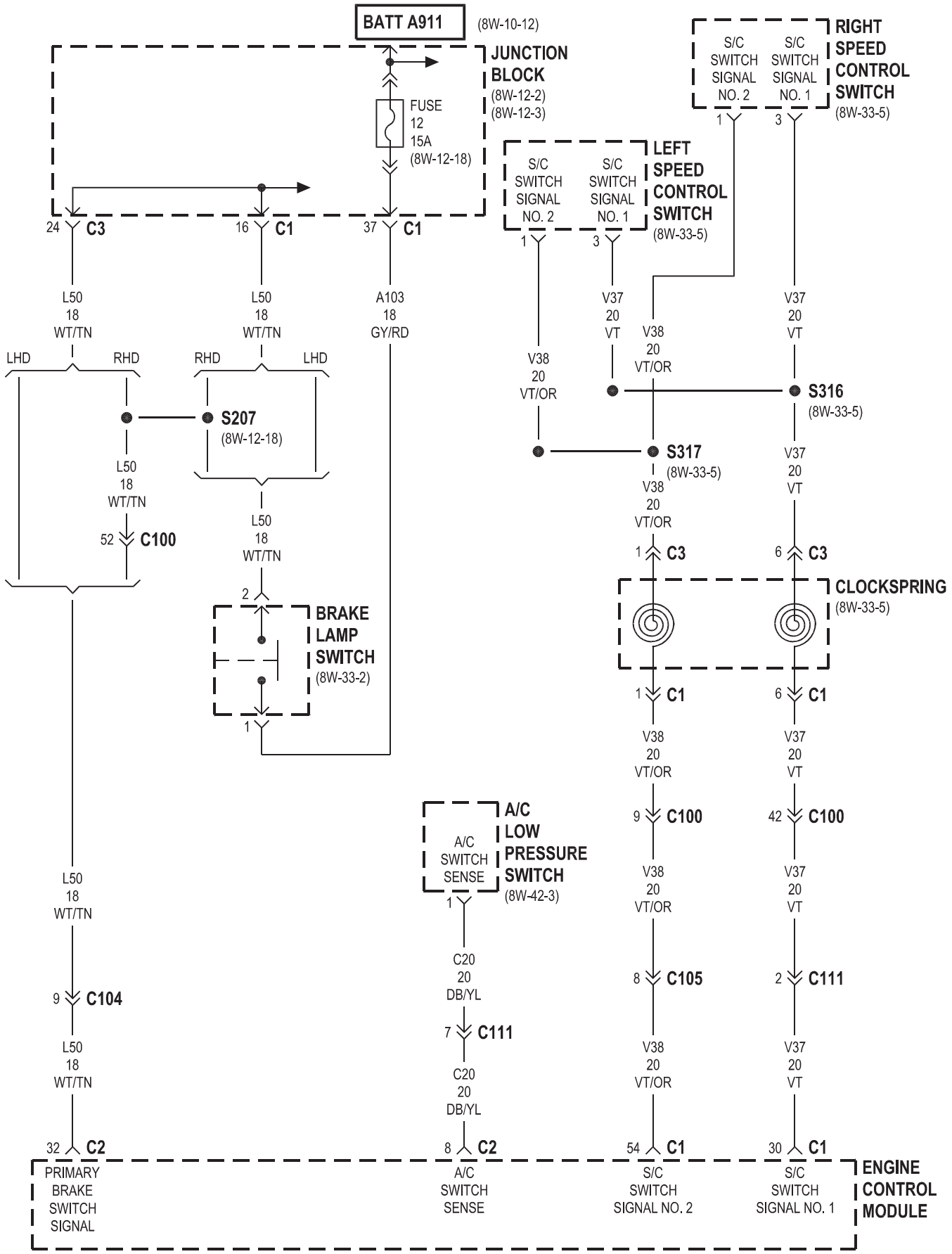
BATT A911
(8W-10-12)
JUNCTION BLOCK
(8W-12-2)
(8W-12-3)
FUSE 12 15A
(8W-12-18)
24 C3
16 C1
37 C1
L50 18 WT/TN
L50 18 WT/TN
A103 18 GY/RD
LHD
RHD
RHD
LHD
S207
(8W-12-18)
L50 18 WT/TN
52 C100
L50 18 WT/TN
2
BRAKE LAMP SWITCH
(8W-33-2)
1
L50 18 WT/TN
9 C104
L50 18 WT/TN
32 C2
PRIMARY BRAKE SWITCH SIGNAL
S/C SWITCH SIGNAL NO. 2
S/C SWITCH SIGNAL NO. 1
RIGHT SPEED CONTROL SWITCH
(8W-33-5)
1
3
S/C SWITCH SIGNAL NO. 2
S/C SWITCH SIGNAL NO. 1
LEFT SPEED CONTROL SWITCH
(8W-33-5)
1
3
V38 20 VT/OR
V37 20 VT
V38 20 VT/OR
V37 20 VT
S316
(8W-33-5)
S317
(8W-33-5)
V38 20 VT/OR
V37 20 VT
1 C3
6 C3
CLOCKSPRING
(8W-33-5)
1 C1
6 C1
V38 20 VT/OR
V37 20 VT
9 C100
42 C100
V38 20 VT/OR
V37 20 VT
8 C105
2 C111
V38 20 VT/OR
V37 20 VT
54 C1
30 C1
S/C SWITCH SIGNAL NO. 2
S/C SWITCH SIGNAL NO. 1
A/C SWITCH SENSE
A/C LOW PRESSURE SWITCH
(8W-42-3)
1
C20 20 DB/YL
7 C111
C20 20 DB/YL
8 C2
A/C SWITCH SENSE
ENGINE CONTROL MODULE

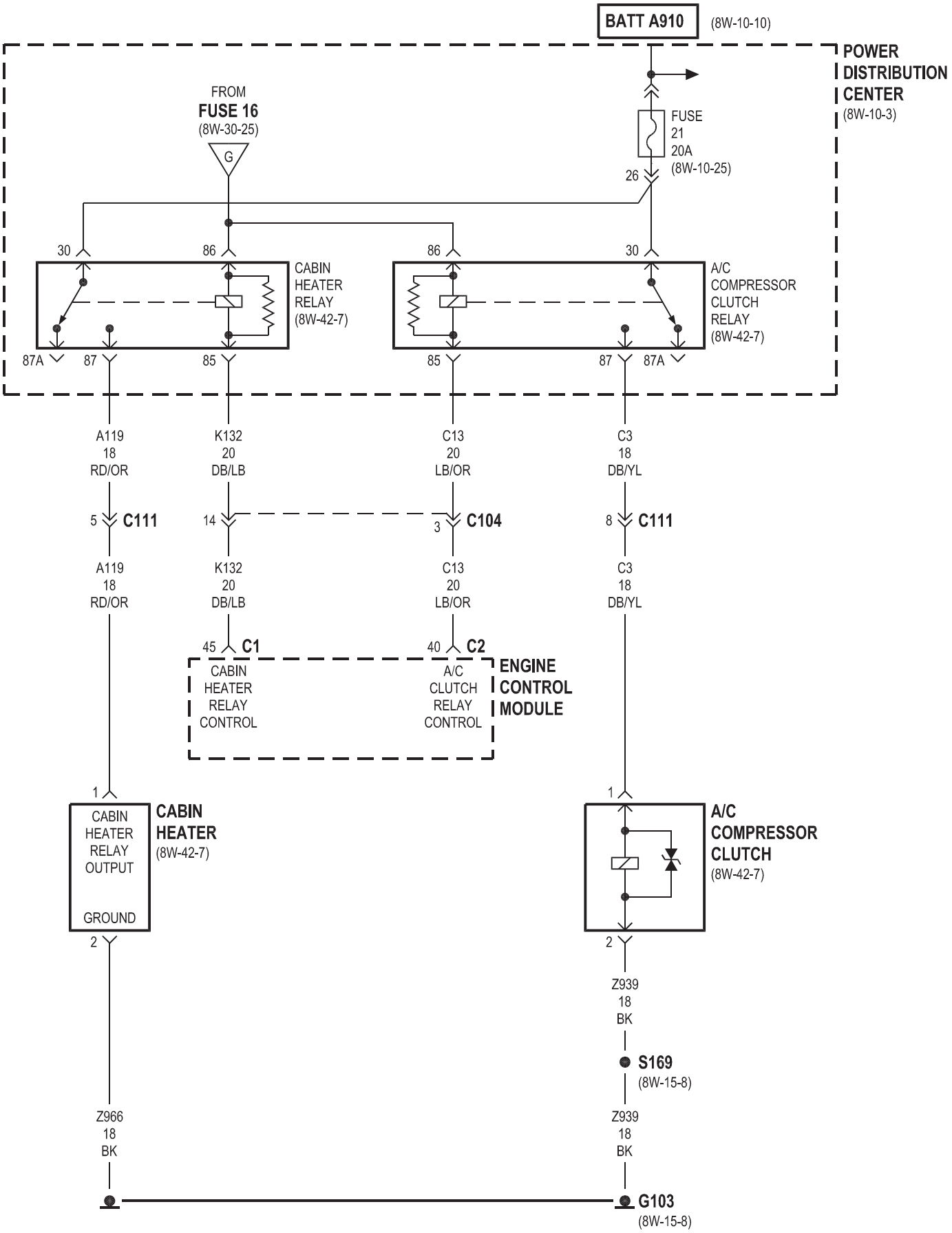
BATT A910
(8W-10-10)
POWER DISTRIBUTION CENTER
(8W-10-3)
FROM
FUSE 16
(8W-30-25)
G
FUSE
21
20A
(8W-10-25)
26
30
86
86
30
CABIN HEATER RELAY
(8W-42-7)
A/C COMPRESSOR CLUTCH RELAY
(8W-42-7)
87A
87
85
85
87
87A
A119
18
RD/OR
K132
20
DB/LB
C13
20
LB/OR
C3
18
DB/YL
5
C111
14
3
C104
8
C111
A119
18
RD/OR
K132
20
DB/LB
C13
20
LB/OR
C3
18
DB/YL
45
C1
40
C2
CABIN HEATER RELAY CONTROL
A/C CLUTCH RELAY CONTROL
ENGINE CONTROL MODULE
1
CABIN HEATER RELAY OUTPUT
GROUND
CABIN HEATER
(8W-42-7)
2
1
A/C COMPRESSOR CLUTCH
(8W-42-7)
2
Z939
18
BK
S169
(8W-15-8)
Z966
18
BK
Z939
18
BK
G103
(8W-15-8)

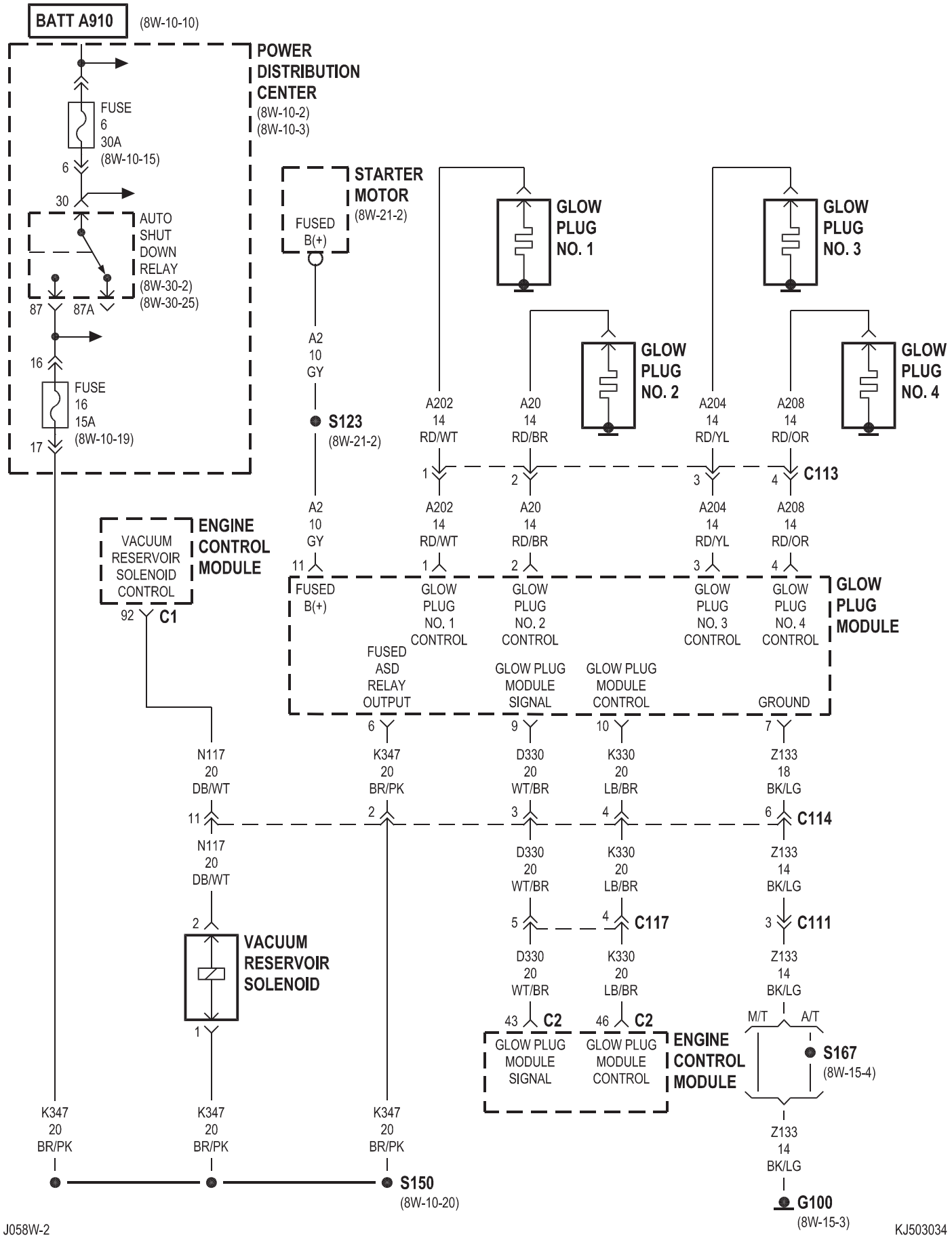
BATT A910
(8W-10-10)
POWER DISTRIBUTION CENTER
(8W-10-2)
(8W-10-3)
FUSE 6 30A
(8W-10-15)
6
30
AUTO SHUT DOWN RELAY
(8W-30-2)
(8W-30-25)
87
87A
16
FUSE 16 15A
(8W-10-19)
17
STARTER MOTOR
(8W-21-2)
FUSED B(+)
A2 10 GY
S123
(8W-21-2)
GLOW PLUG NO. 1
GLOW PLUG NO. 2
GLOW PLUG NO. 3
GLOW PLUG NO. 4
A202 14 RD/WT
A20 14 RD/BR
A204 14 RD/YL
A208 14 RD/OR
1
2
3
4
C113
A2 10 GY
A202 14 RD/WT
A20 14 RD/BR
A204 14 RD/YL
A208 14 RD/OR
11
1
2
3
4
ENGINE CONTROL MODULE
VACUUM RESERVOIR SOLENOID CONTROL
92
C1
GLOW PLUG MODULE
FUSED B(+)
GLOW PLUG NO. 1 CONTROL
GLOW PLUG NO. 2 CONTROL
GLOW PLUG NO. 3 CONTROL
GLOW PLUG NO. 4 CONTROL
FUSED ASD RELAY OUTPUT
GLOW PLUG MODULE SIGNAL
GLOW PLUG MODULE CONTROL
GROUND
6
9
10
7
N117 20 DB/WT
K347 20 BR/PK
D330 20 WT/BR
K330 20 LB/BR
Z133 18 BK/LG
11
2
3
4
6
C114
N117 20 DB/WT
D330 20 WT/BR
K330 20 LB/BR
Z133 14 BK/LG
2
5
4
C117
3
C111
VACUUM RESERVOIR SOLENOID
1
D330 20 WT/BR
K330 20 LB/BR
Z133 14 BK/LG
43
C2
46
C2
GLOW PLUG MODULE SIGNAL
GLOW PLUG MODULE CONTROL
ENGINE CONTROL MODULE
M/T
A/T
S167
(8W-15-4)
K347 20 BR/PK
K347 20 BR/PK
K347 20 BR/PK
S150
(8W-10-20)
Z133 14 BK/LG
G100
(8W-15-3)

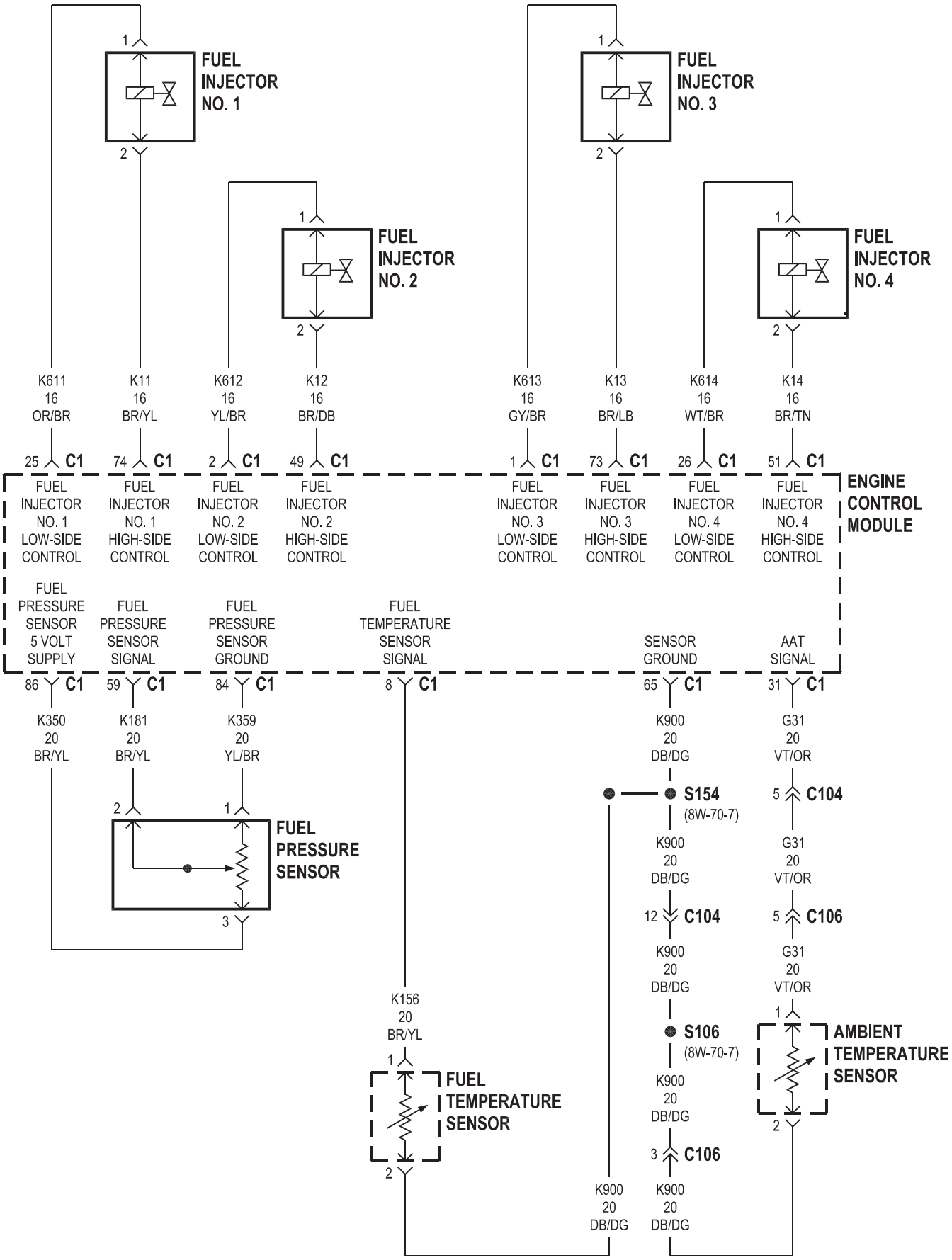
FUEL INJECTOR NO. 1
FUEL INJECTOR NO. 2
FUEL INJECTOR NO. 3
FUEL INJECTOR NO. 4
K611 16 OR/BR
K11 16 BR/YL
K612 16 YL/BR
K12 16 BR/DB
K613 16 GY/BR
K13 16 BR/LB
K614 16 WT/BR
K14 16 BR/TN
25 C1
74 C1
2 C1
49 C1
1 C1
73 C1
26 C1
51 C1
FUEL INJECTOR NO. 1 LOW-SIDE CONTROL
FUEL INJECTOR NO. 1 HIGH-SIDE CONTROL
FUEL INJECTOR NO. 2 LOW-SIDE CONTROL
FUEL INJECTOR NO. 2 HIGH-SIDE CONTROL
FUEL INJECTOR NO. 3 LOW-SIDE CONTROL
FUEL INJECTOR NO. 3 HIGH-SIDE CONTROL
FUEL INJECTOR NO. 4 LOW-SIDE CONTROL
FUEL INJECTOR NO. 4 HIGH-SIDE CONTROL
ENGINE CONTROL MODULE
FUEL PRESSURE SENSOR 5 VOLT SUPPLY
FUEL PRESSURE SENSOR SIGNAL
FUEL PRESSURE SENSOR GROUND
FUEL TEMPERATURE SENSOR SIGNAL
SENSOR GROUND
AAT SIGNAL
86 C1
59 C1
84 C1
8 C1
65 C1
31 C1
K350 20 BR/YL
K181 20 BR/YL
K359 20 YL/BR
K900 20 DB/DG
G31 20 VT/OR
S154 (8W-70-7)
5 C104
FUEL PRESSURE SENSOR
12 C104
5 C106
S106 (8W-70-7)
K156 20 BR/YL
FUEL TEMPERATURE SENSOR
AMBIENT TEMPERATURE SENSOR
3 C106

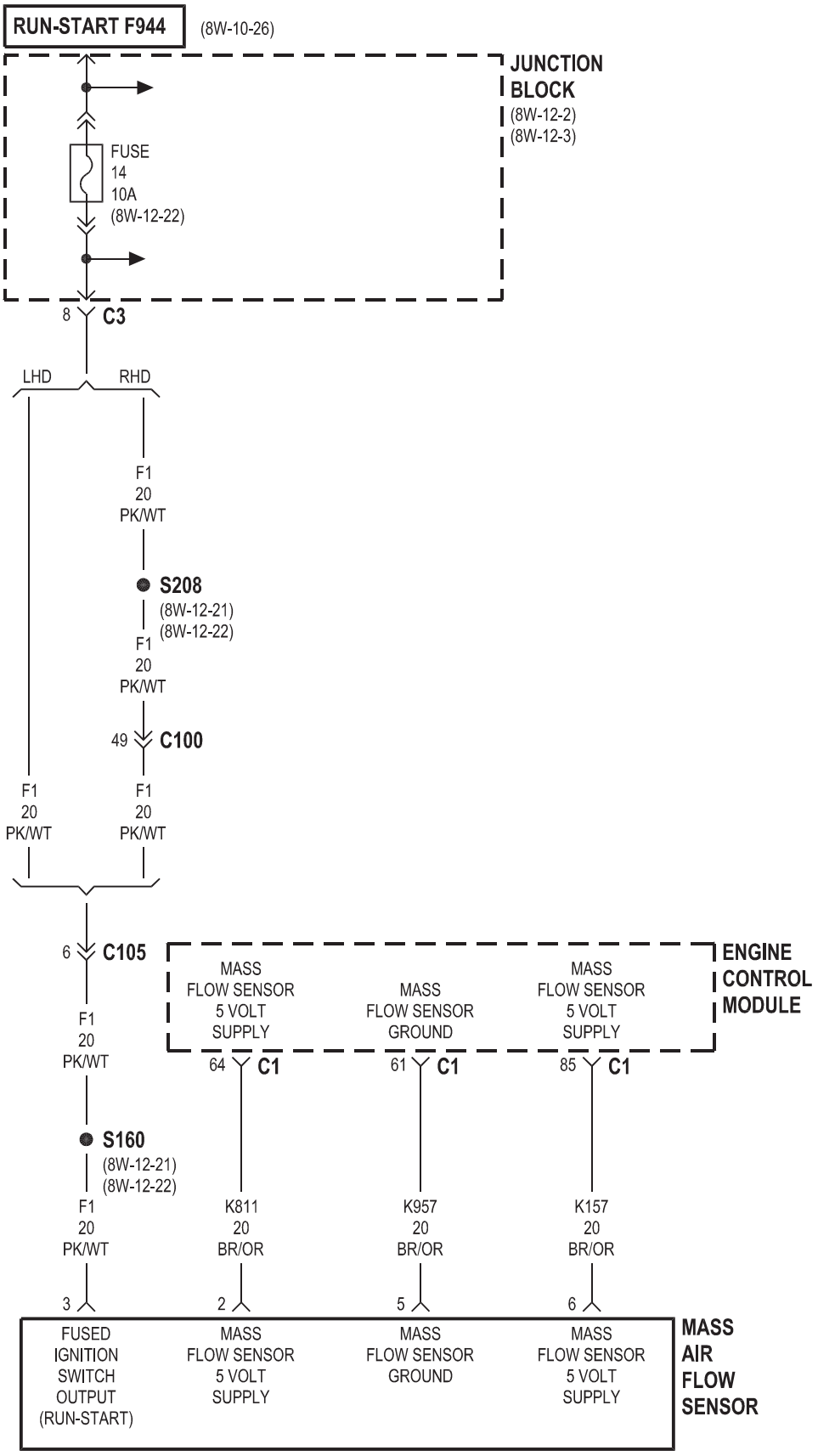
RUN-START F944
(8W-10-26)
JUNCTION BLOCK
(8W-12-2)
(8W-12-3)
FUSE
14
10A
(8W-12-22)
8
C3
LHD
RHD
F1
20
PK/WT
S208
(8W-12-21)
(8W-12-22)
F1
20
PK/WT
49
C100
F1
20
PK/WT
F1
20
PK/WT
6
C105
F1
20
PK/WT
S160
(8W-12-21)
(8W-12-22)
F1
20
PK/WT
ENGINE CONTROL MODULE
MASS FLOW SENSOR 5 VOLT SUPPLY
MASS FLOW SENSOR GROUND
MASS FLOW SENSOR 5 VOLT SUPPLY
64
C1
61
C1
85
C1
K811
20
BR/OR
K957
20
BR/OR
K157
20
BR/OR
3
2
5
6
FUSED IGNITION SWITCH OUTPUT (RUN-START)
MASS FLOW SENSOR 5 VOLT SUPPLY
MASS FLOW SENSOR GROUND
MASS FLOW SENSOR 5 VOLT SUPPLY
MASS AIR FLOW SENSOR

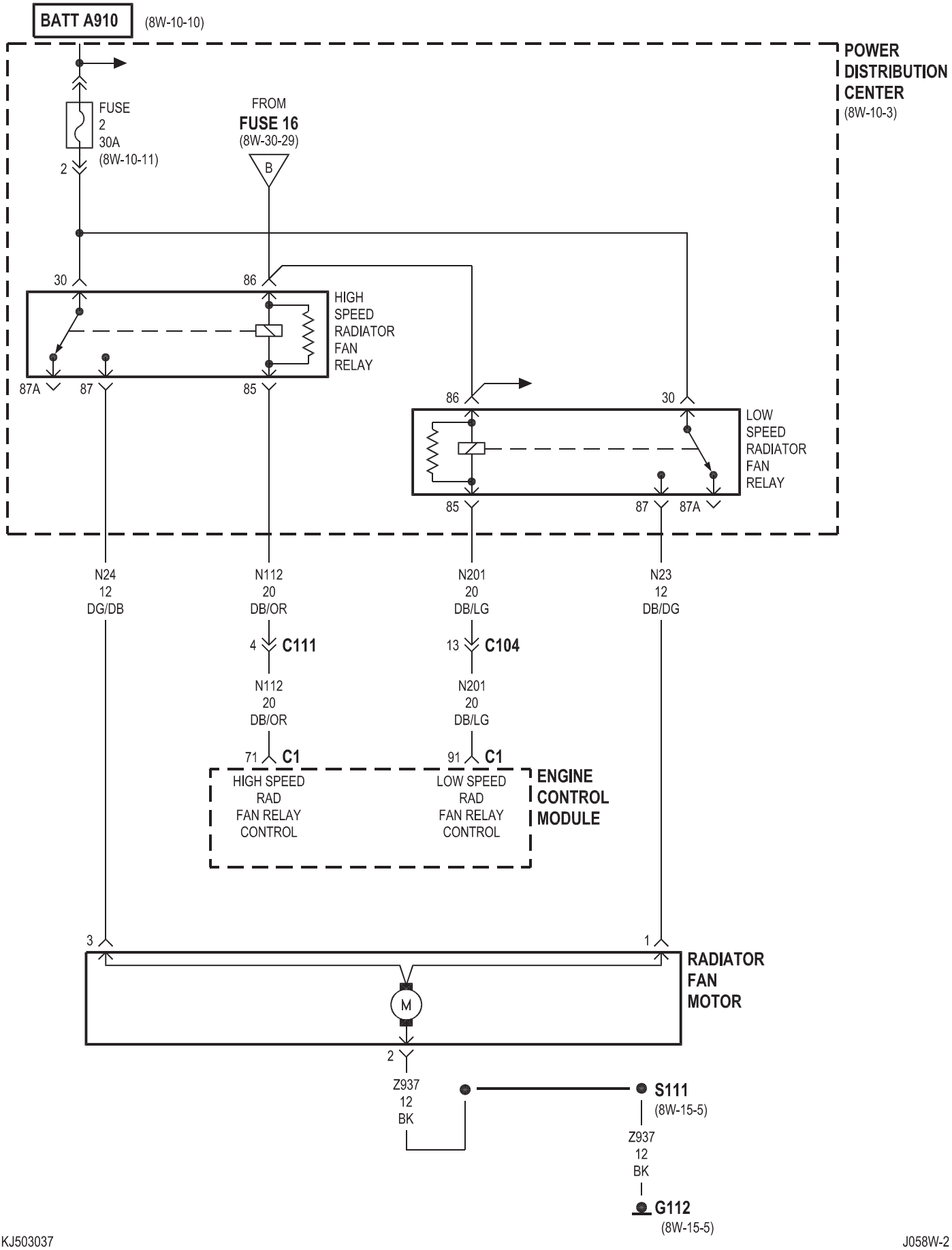
BATT A910
(8W-10-10)
POWER DISTRIBUTION CENTER
(8W-10-3)
FUSE 2 30A
(8W-10-11)
2
FROM
FUSE 16
(8W-30-29)
B
30
86
HIGH SPEED RADIATOR FAN RELAY
87A
87
85
86
30
LOW SPEED RADIATOR FAN RELAY
85
87
87A
N24 12 DG/DB
N112 20 DB/OR
N201 20 DB/LG
N23 12 DB/DG
4
C111
13
C104
N112 20 DB/OR
N201 20 DB/LG
71
C1
91
C1
HIGH SPEED RAD FAN RELAY CONTROL
LOW SPEED RAD FAN RELAY CONTROL
ENGINE CONTROL MODULE
3
1
M
RADIATOR FAN MOTOR
2
Z937 12 BK
S111
(8W-15-5)
Z937 12 BK
G112
(8W-15-5)

8W-31 TRANSMISSION CONTROL SYSTEM

Component	Page
Accelerator Pedal Position Sensor	8W-31-11
Automatic Day/Night Mirror	8W-31-10
Brake Lamp Switch	8W-31-7, 11
Data Link Connector	8W-31-9, 14
Engine Control Module	8W-31-9, 11, 13, 14, 15
Fuse 5	8W-31-2, 4, 5, 8, 12, 13, 16
Fuse 14	8W-31-9
Fuse 28	8W-31-9
Fuse 38	8W-31-7, 11
Fuse 39	8W-31-3, 10
G100	8W-31-12, 14
G102	8W-31-2
G111	8W-31-2, 8
G301	8W-31-7, 11
Input Speed Sensor	8W-31-6, 15
Instrument Cluster	8W-31-7, 11
Junction Block	8W-31-3, 7, 9, 10, 11
Left Tail/Stop Lamp	8W-31-3, 10
Line Pressure Sensor	8W-31-14
Output Speed Sensor	8W-31-6, 15
Power Distribution Center	8W-31-2, 4, 5, 8, 9, 12, 13, 16
Powertrain Control Module	8W-31-2, 3, 4, 5, 6, 7, 16
Right Tail/Stop Lamp	8W-31-3, 10
Shifter Assembly	8W-31-7, 11
Trailer Tow Connector	8W-31-10
Transfer Case Position Sensor	8W-31-7, 11
Transmission Control Module	8W-31-8, 9, 11, 12, 13, 14, 15
Transmission Control Relay	8W-31-2, 4, 5, 8, 12, 13, 16
Transmission Range Sensor	8W-31-3
Transmission Solenoid/Pressure Switch Assembly	8W-31-2, 4, 5
Transmission Solenoid/TRS Assembly	8W-31-8, 10, 12, 13, 15
Variable Line Pressure Sensor	8W-31-16

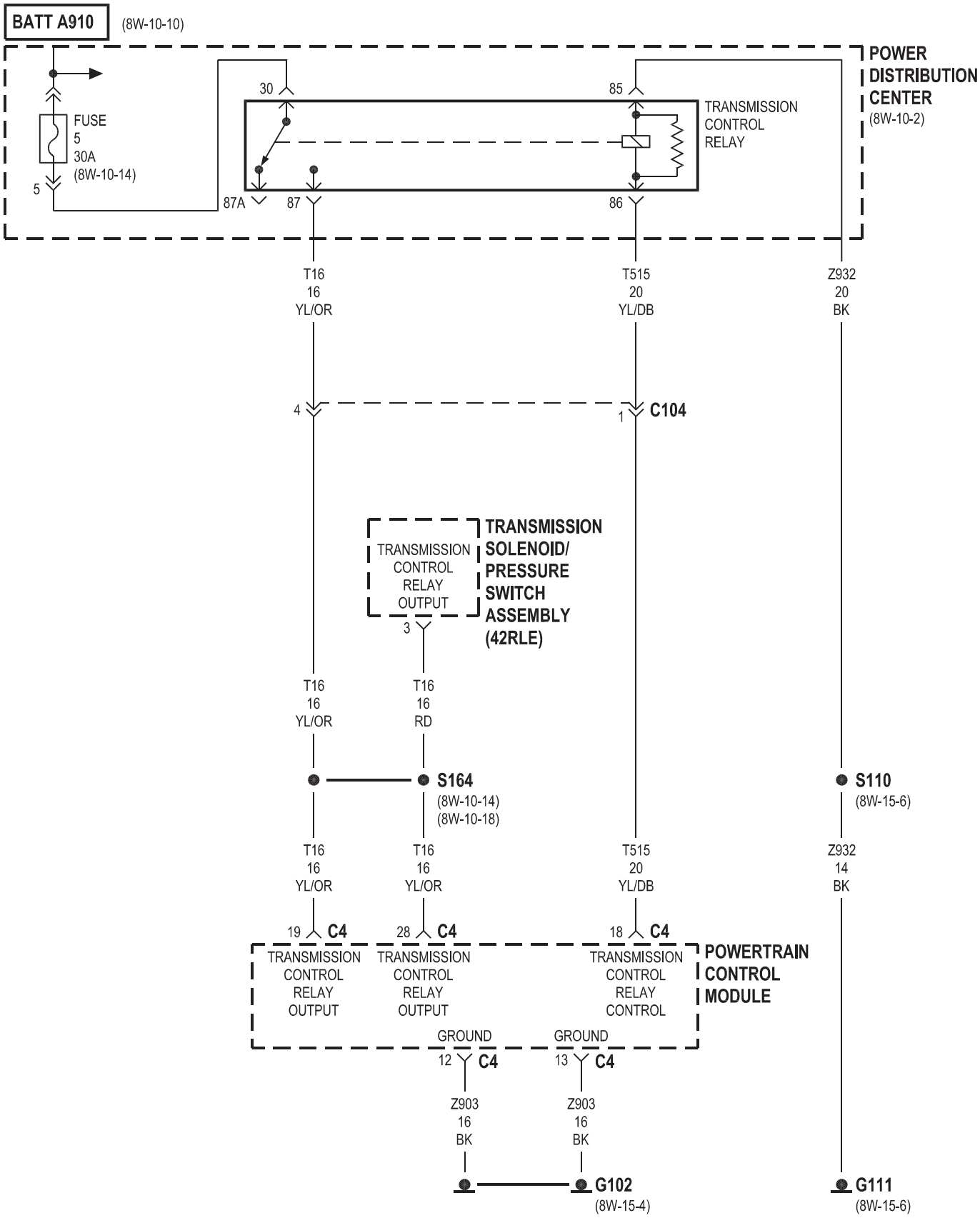
BATT A910
(8W-10-10)
POWER DISTRIBUTION CENTER
(8W-10-2)
FUSE
5
30A
(8W-10-14)
5
30
85
87A
87
86
TRANSMISSION CONTROL RELAY
T16
16
YL/OR
T515
20
YL/DB
Z932
20
BK
4
1
C104
TRANSMISSION CONTROL RELAY OUTPUT
3
TRANSMISSION SOLENOID/ PRESSURE SWITCH ASSEMBLY (42RLE)
T16
16
YL/OR
T16
16
RD
S164
(8W-10-14)
(8W-10-18)
S110
(8W-15-6)
T16
16
YL/OR
T16
16
YL/OR
T515
20
YL/DB
Z932
14
BK
19 C4
28 C4
18 C4
TRANSMISSION CONTROL RELAY OUTPUT
TRANSMISSION CONTROL RELAY OUTPUT
TRANSMISSION CONTROL RELAY CONTROL
POWERTRAIN CONTROL MODULE
GROUND
GROUND
12 C4
13 C4
Z903
16
BK
Z903
16
BK
G102
(8W-15-4)
G111
(8W-15-6)
RHD

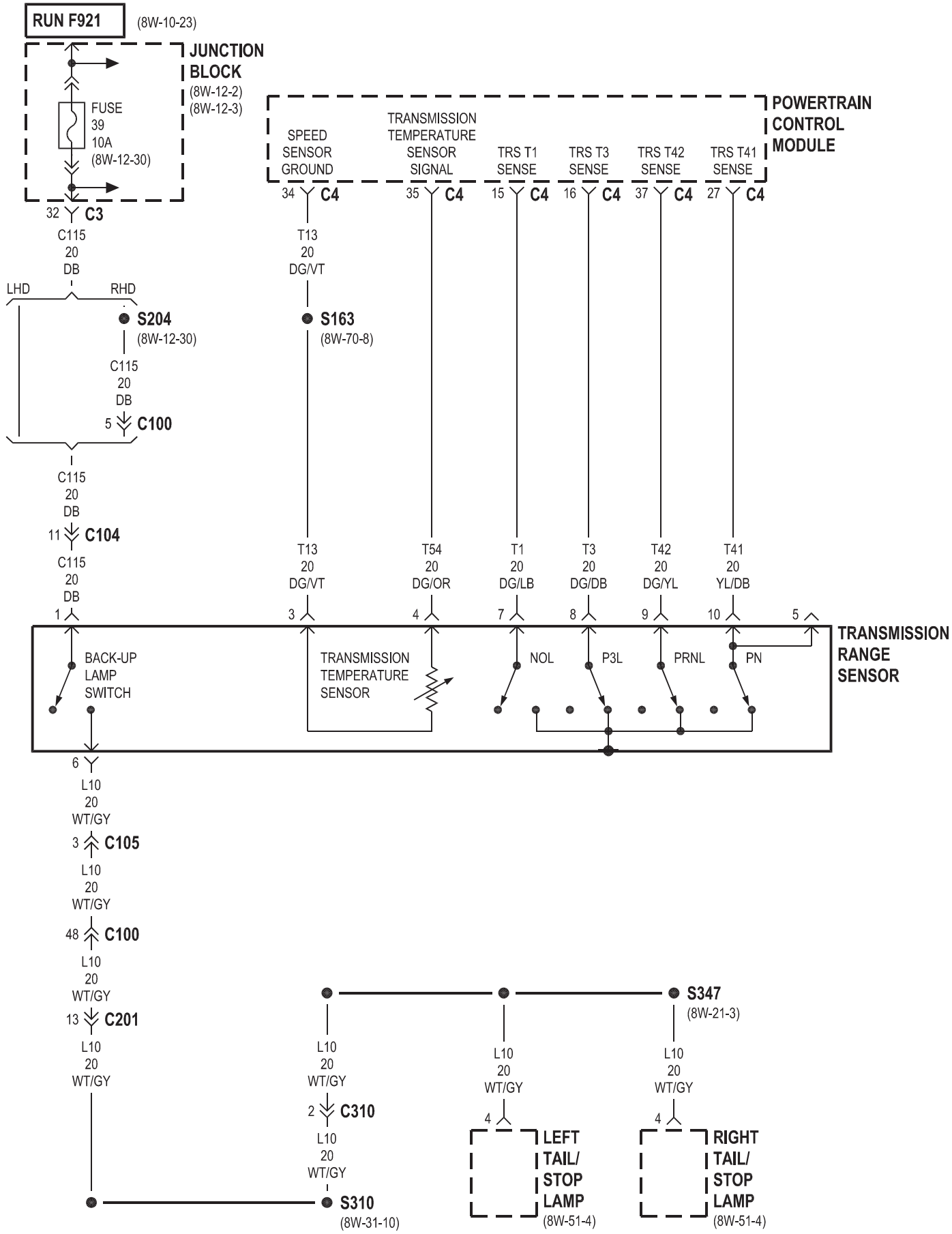
RUN F921
(8W-10-23)
JUNCTION BLOCK
(8W-12-2)
(8W-12-3)
FUSE
39
10A
(8W-12-30)
32 C3
C115
20
DB
LHD
RHD
S204
(8W-12-30)
C115
20
DB
5 C100
C115
20
DB
11 C104
C115
20
DB
1
POWERTRAIN CONTROL MODULE
SPEED SENSOR GROUND
TRANSMISSION TEMPERATURE SENSOR SIGNAL
TRS T1 SENSE
TRS T3 SENSE
TRS T42 SENSE
TRS T41 SENSE
34 C4
35 C4
15 C4
16 C4
37 C4
27 C4
T13
20
DG/VT
S163
(8W-70-8)
T13
20
DG/VT
T54
20
DG/OR
T1
20
DG/LB
T3
20
DG/DB
T42
20
DG/YL
T41
20
YL/DB
3
4
7
8
9
10
5
TRANSMISSION RANGE SENSOR
BACK-UP LAMP SWITCH
TRANSMISSION TEMPERATURE SENSOR
NOL
P3L
PRNL
PN
6
L10
20
WT/GY
3 C105
L10
20
WT/GY
48 C100
L10
20
WT/GY
13 C201
L10
20
WT/GY
S347
(8W-21-3)
L10
20
WT/GY
2 C310
L10
20
WT/GY
S310
(8W-31-10)
L10
20
WT/GY
4
LEFT TAIL/ STOP LAMP
(8W-51-4)
L10
20
WT/GY
4
RIGHT TAIL/ STOP LAMP
(8W-51-4)

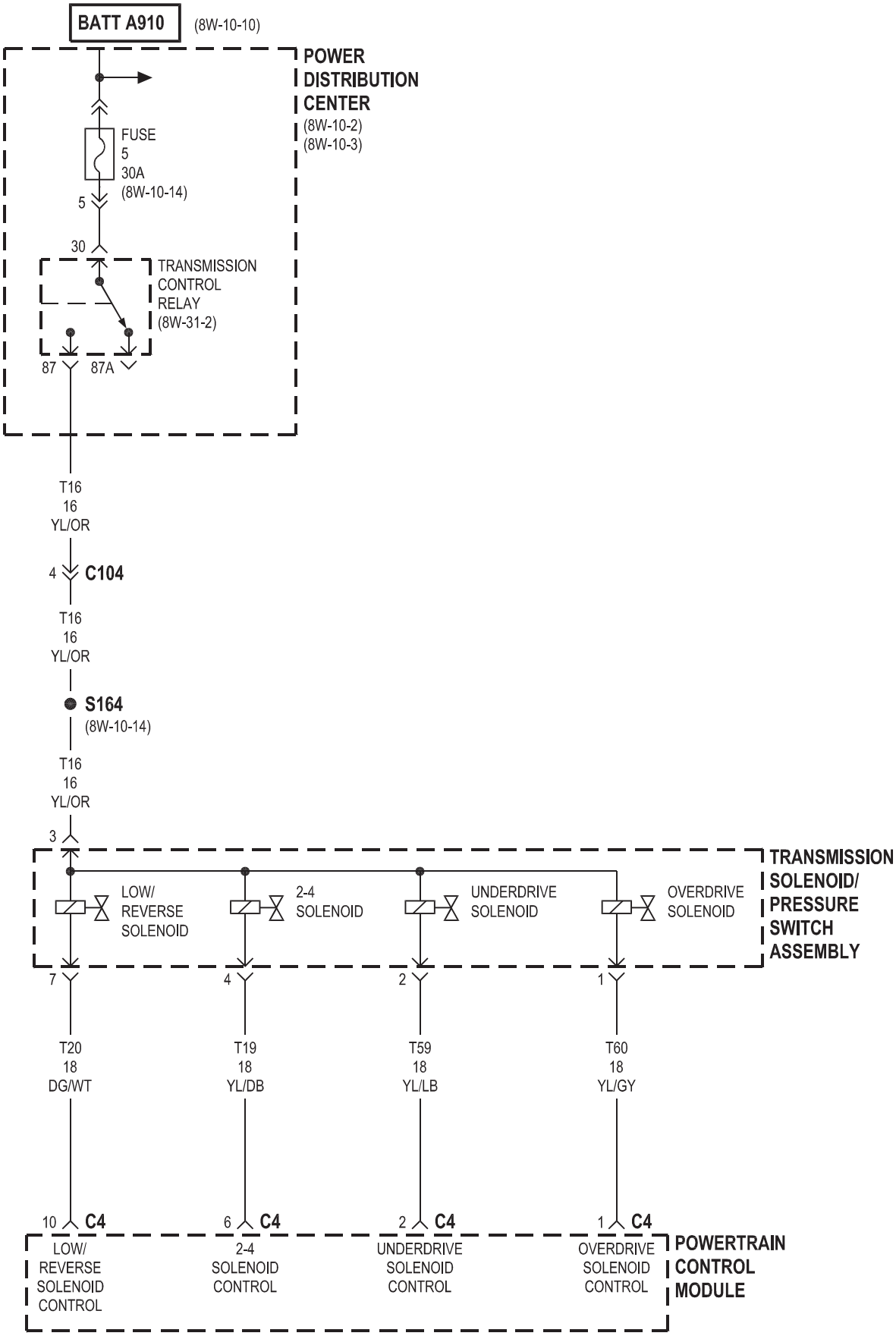
BATT A910
(8W-10-10)
POWER DISTRIBUTION CENTER
(8W-10-2)
(8W-10-3)
FUSE 5 30A
(8W-10-14)
5
30
TRANSMISSION CONTROL RELAY
(8W-31-2)
87
87A
T16 16 YL/OR
4
C104
T16 16 YL/OR
S164
(8W-10-14)
T16 16 YL/OR
3
LOW/ REVERSE SOLENOID
2-4 SOLENOID
UNDERDRIVE SOLENOID
OVERDRIVE SOLENOID
TRANSMISSION SOLENOID/ PRESSURE SWITCH ASSEMBLY
7
4
2
1
T20 18 DG/WT
T19 18 YL/DB
T59 18 YL/LB
T60 18 YL/GY
10 C4
6 C4
2 C4
1 C4
LOW/ REVERSE SOLENOID CONTROL
2-4 SOLENOID CONTROL
UNDERDRIVE SOLENOID CONTROL
OVERDRIVE SOLENOID CONTROL
POWERTRAIN CONTROL MODULE

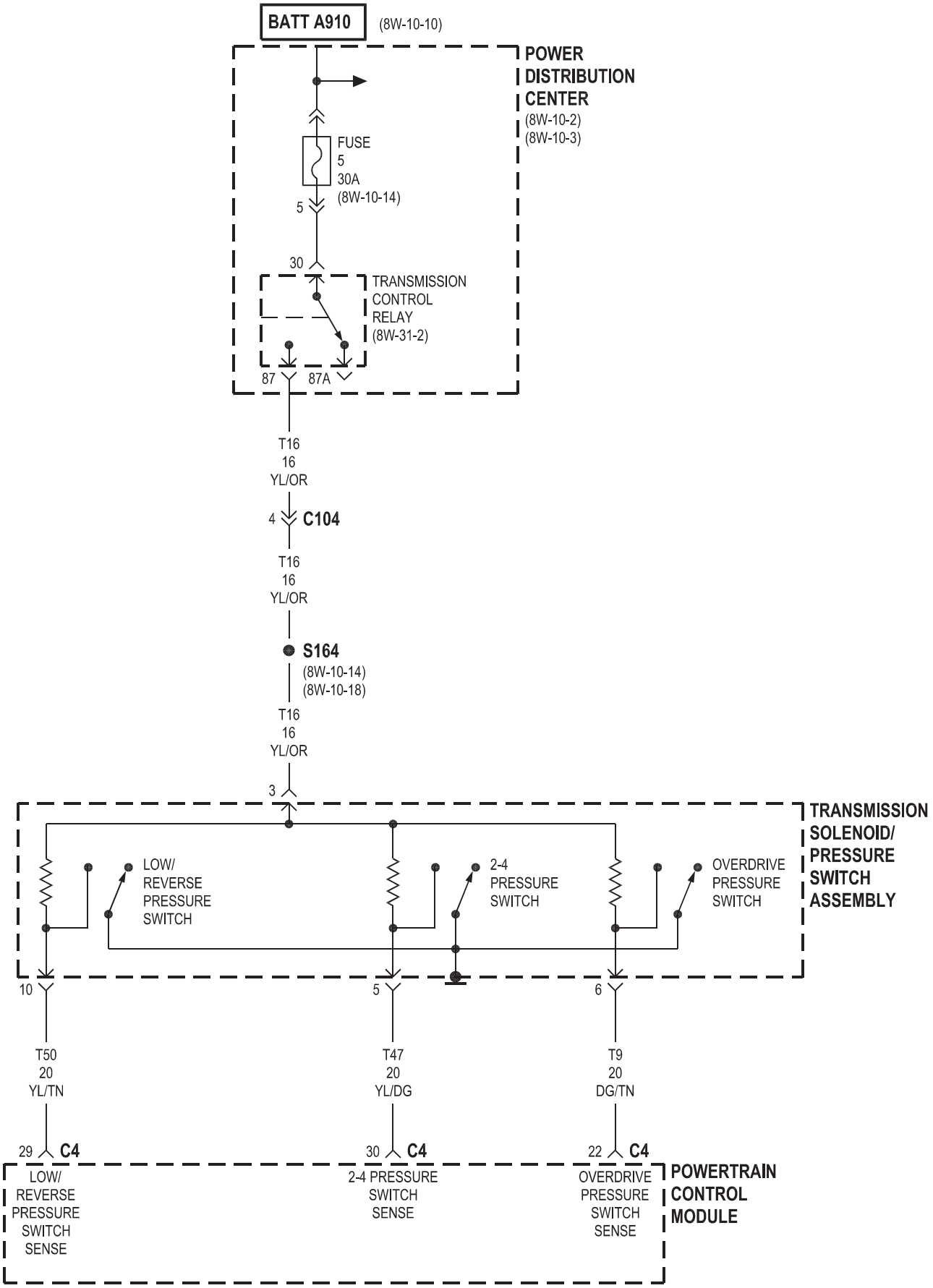
BATT A910
(8W-10-10)
POWER DISTRIBUTION CENTER
(8W-10-2)
(8W-10-3)
FUSE
5
30A
(8W-10-14)
5
30
TRANSMISSION CONTROL RELAY
(8W-31-2)
87
87A
T16
16
YL/OR
4
C104
T16
16
YL/OR
S164
(8W-10-14)
(8W-10-18)
T16
16
YL/OR
3
TRANSMISSION SOLENOID/ PRESSURE SWITCH ASSEMBLY
LOW/ REVERSE PRESSURE SWITCH
2-4 PRESSURE SWITCH
OVERDRIVE PRESSURE SWITCH
10
5
6
T50
20
YL/TN
T47
20
YL/DG
T9
20
DG/TN
29
C4
30
C4
22
C4
LOW/ REVERSE PRESSURE SWITCH SENSE
2-4 PRESSURE SWITCH SENSE
OVERDRIVE PRESSURE SWITCH SENSE
POWERTRAIN CONTROL MODULE

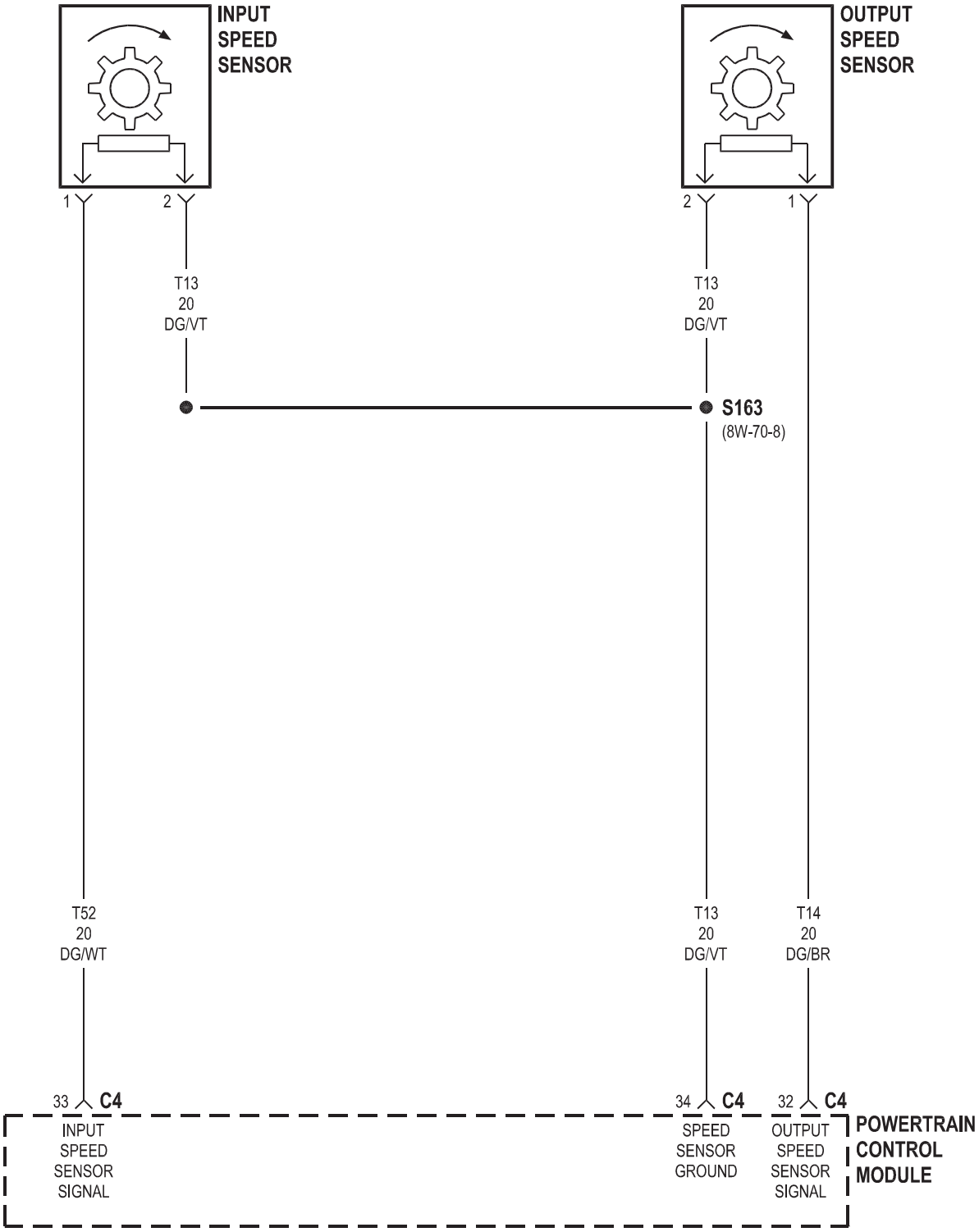
INPUT
SPEED
SENSOR
OUTPUT
SPEED
SENSOR
1
2
2
1
T13
20
DG/VT
T13
20
DG/VT
S163
(8W-70-8)
T52
20
DG/WT
T13
20
DG/VT
T14
20
DG/BR
33 C4
34 C4
32 C4
INPUT
SPEED
SENSOR
SIGNAL
SPEED
SENSOR
GROUND
OUTPUT
SPEED
SENSOR
SIGNAL
POWERTRAIN
CONTROL
MODULE

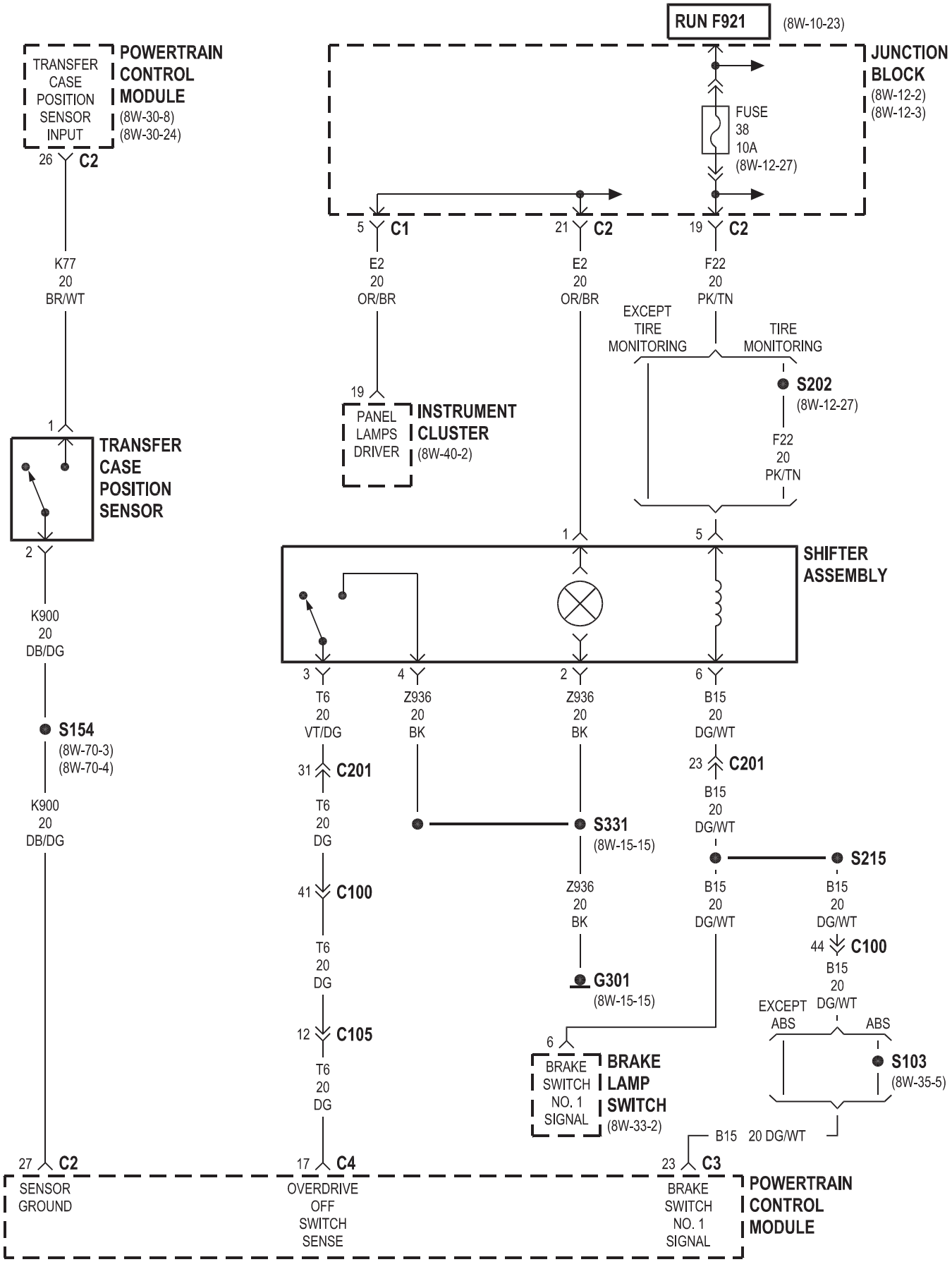
RUN F921
(8W-10-23)
JUNCTION BLOCK
(8W-12-2)
(8W-12-3)
FUSE 38 10A
(8W-12-27)
TRANSFER CASE POSITION SENSOR INPUT
POWERTRAIN CONTROL MODULE
(8W-30-8)
(8W-30-24)
26 C2
K77 20 BR/WT
5 C1
E2 20 OR/BR
21 C2
E2 20 OR/BR
19 C2
F22 20 PK/TN
EXCEPT TIRE MONITORING
TIRE MONITORING
S202
(8W-12-27)
F22 20 PK/TN
19
PANEL LAMPS DRIVER
INSTRUMENT CLUSTER
(8W-40-2)
1
TRANSFER CASE POSITION SENSOR
2
K900 20 DB/DG
S154
(8W-70-3)
(8W-70-4)
K900 20 DB/DG
1
5
SHIFTER ASSEMBLY
3 T6 20 VT/DG
4 Z936 20 BK
2 Z936 20 BK
6 B15 20 DG/WT
31 C201
T6 20 DG
41 C100
T6 20 DG
12 C105
T6 20 DG
S331
(8W-15-15)
Z936 20 BK
G301
(8W-15-15)
23 C201
B15 20 DG/WT
S215
B15 20 DG/WT
B15 20 DG/WT
44 C100
B15 20 DG/WT
EXCEPT ABS
ABS
S103
(8W-35-5)
6
BRAKE SWITCH NO. 1 SIGNAL
BRAKE LAMP SWITCH
(8W-33-2)
B15 20 DG/WT
27 C2
SENSOR GROUND
17 C4
OVERDRIVE OFF SWITCH SENSE
23 C3
BRAKE SWITCH NO. 1 SIGNAL
POWERTRAIN CONTROL MODULE

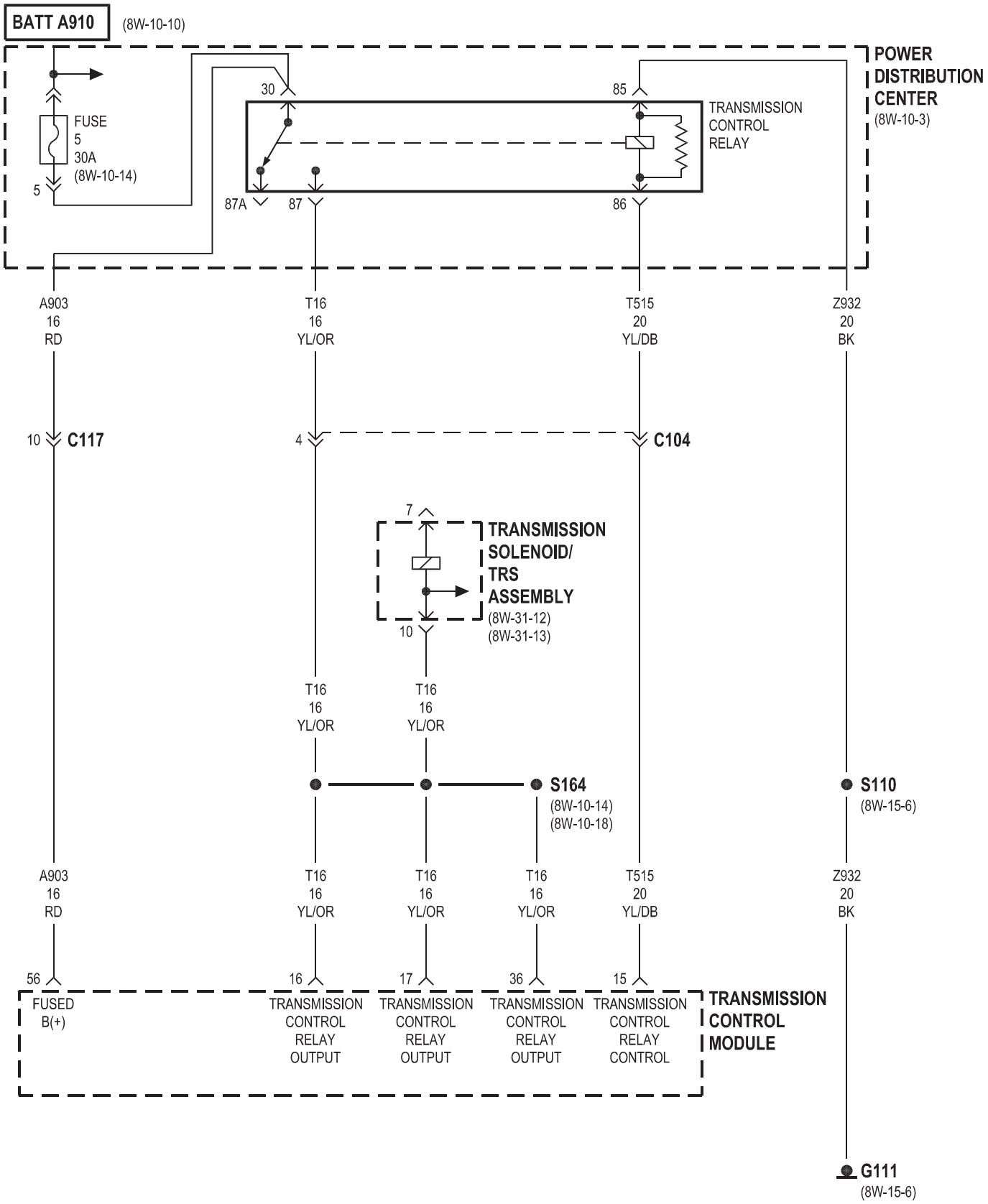
BATT A910
(8W-10-10)
POWER DISTRIBUTION CENTER
(8W-10-3)
FUSE
5
30A
(8W-10-14)
5
30
85
TRANSMISSION CONTROL RELAY
87A
87
86
A903
16
RD
T16
16
YL/OR
T515
20
YL/DB
Z932
20
BK
10
C117
4
C104
7
TRANSMISSION SOLENOID/ TRS ASSEMBLY
(8W-31-12)
(8W-31-13)
10
T16
16
YL/OR
T16
16
YL/OR
S164
(8W-10-14)
(8W-10-18)
S110
(8W-15-6)
A903
16
RD
T16
16
YL/OR
T16
16
YL/OR
T16
16
YL/OR
T515
20
YL/DB
Z932
20
BK
56
16
17
36
15
FUSED B(+)
TRANSMISSION CONTROL RELAY OUTPUT
TRANSMISSION CONTROL RELAY OUTPUT
TRANSMISSION CONTROL RELAY OUTPUT
TRANSMISSION CONTROL RELAY CONTROL
TRANSMISSION CONTROL MODULE
G111
(8W-15-6)

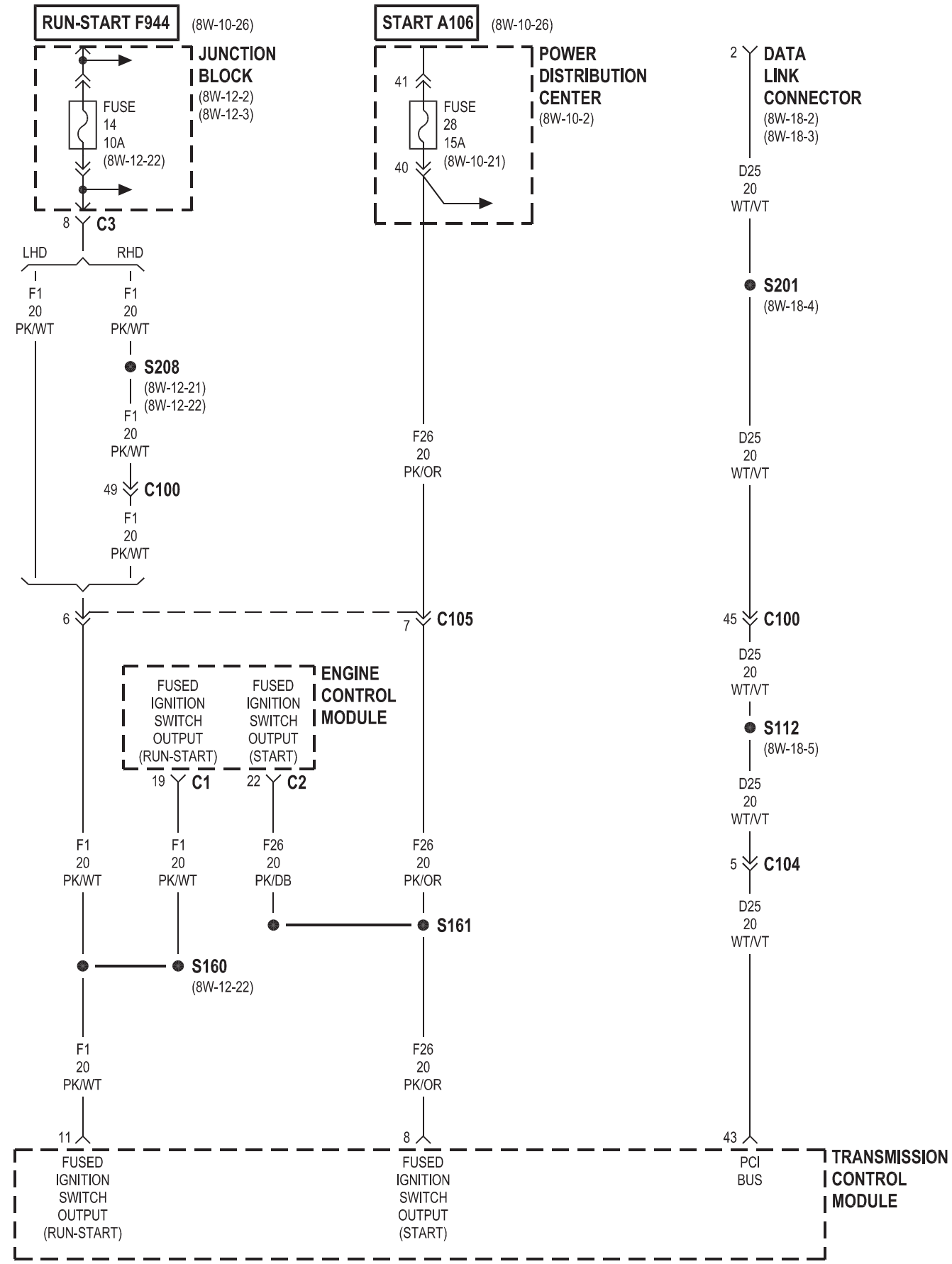
RUN-START F944
(8W-10-26)
START A106
(8W-10-26)
JUNCTION BLOCK
(8W-12-2)
(8W-12-3)
FUSE 14 10A
(8W-12-22)
POWER DISTRIBUTION CENTER
(8W-10-2)
FUSE 28 15A
(8W-10-21)
41
40
2
DATA LINK CONNECTOR
(8W-18-2)
(8W-18-3)
D25 20 WT/VT
8
C3
LHD
RHD
F1 20 PK/WT
F1 20 PK/WT
S201
(8W-18-4)
S208
(8W-12-21)
(8W-12-22)
F1 20 PK/WT
F26 20 PK/OR
D25 20 WT/VT
49
C100
F1 20 PK/WT
6
7
C105
45
C100
D25 20 WT/VT
ENGINE CONTROL MODULE
FUSED IGNITION SWITCH OUTPUT (RUN-START)
FUSED IGNITION SWITCH OUTPUT (START)
S112
(8W-18-5)
19
C1
22
C2
D25 20 WT/VT
F1 20 PK/WT
F1 20 PK/WT
F26 20 PK/DB
F26 20 PK/OR
5
C104
D25 20 WT/VT
S161
S160
(8W-12-22)
F1 20 PK/WT
F26 20 PK/OR
11
8
43
FUSED IGNITION SWITCH OUTPUT (RUN-START)
FUSED IGNITION SWITCH OUTPUT (START)
PCI BUS
TRANSMISSION CONTROL MODULE

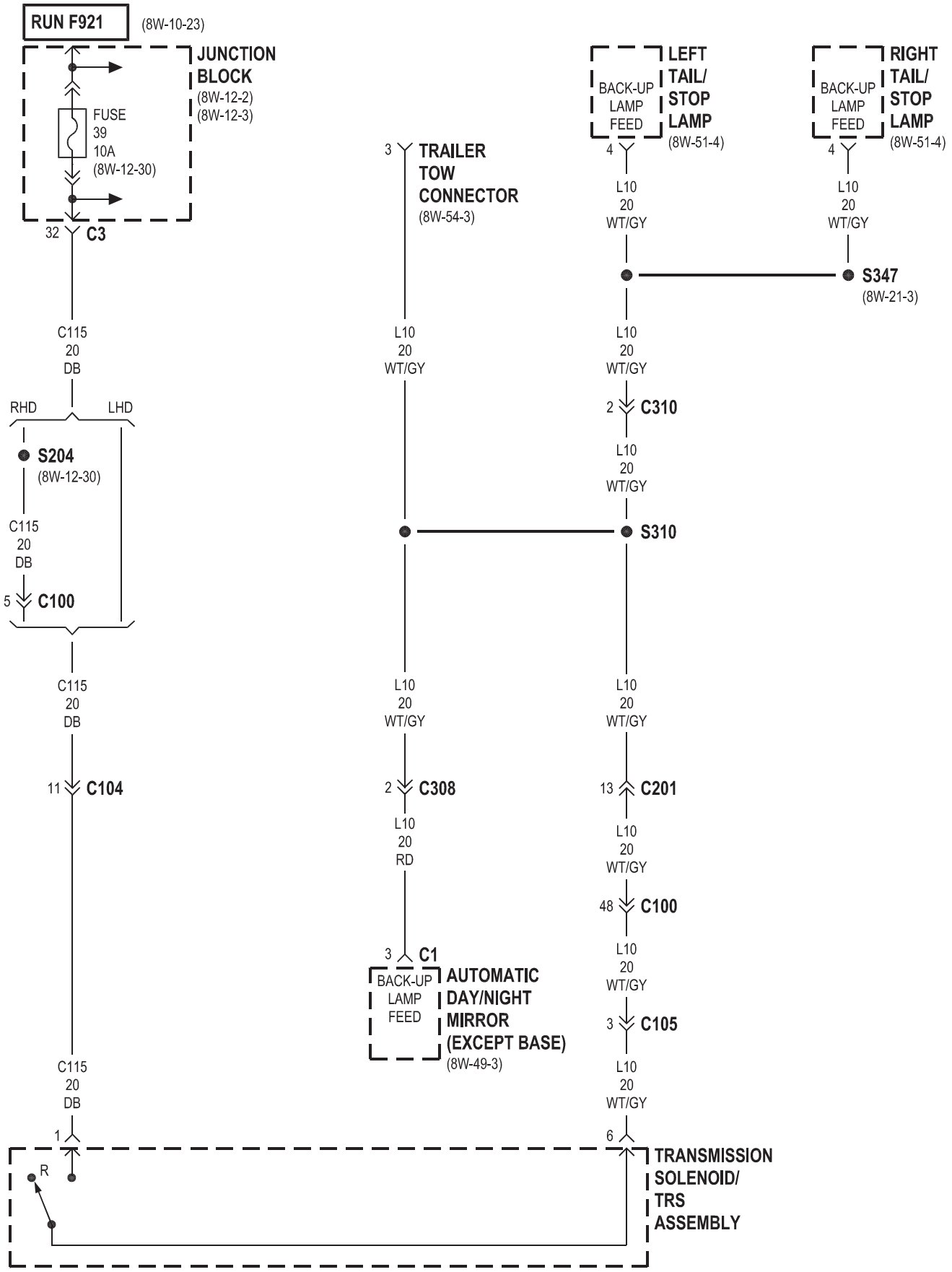
RUN F921
(8W-10-23)
JUNCTION BLOCK
(8W-12-2)
(8W-12-3)
FUSE 39 10A
(8W-12-30)
32
C3
C115 20 DB
RHD
LHD
S204
(8W-12-30)
C115 20 DB
5
C100
C115 20 DB
11
C104
C115 20 DB
1
R
3
TRAILER TOW CONNECTOR
(8W-54-3)
L10 20 WT/GY
L10 20 WT/GY
2
C308
L10 20 RD
3
C1
BACK-UP LAMP FEED
AUTOMATIC DAY/NIGHT MIRROR (EXCEPT BASE)
(8W-49-3)
BACK-UP LAMP FEED
LEFT TAIL/ STOP LAMP
(8W-51-4)
4
L10 20 WT/GY
L10 20 WT/GY
2
C310
L10 20 WT/GY
S310
L10 20 WT/GY
13
C201
L10 20 WT/GY
48
C100
L10 20 WT/GY
3
C105
L10 20 WT/GY
6
BACK-UP LAMP FEED
RIGHT TAIL/ STOP LAMP
(8W-51-4)
4
L10 20 WT/GY
S347
(8W-21-3)
TRANSMISSION SOLENOID/ TRS ASSEMBLY

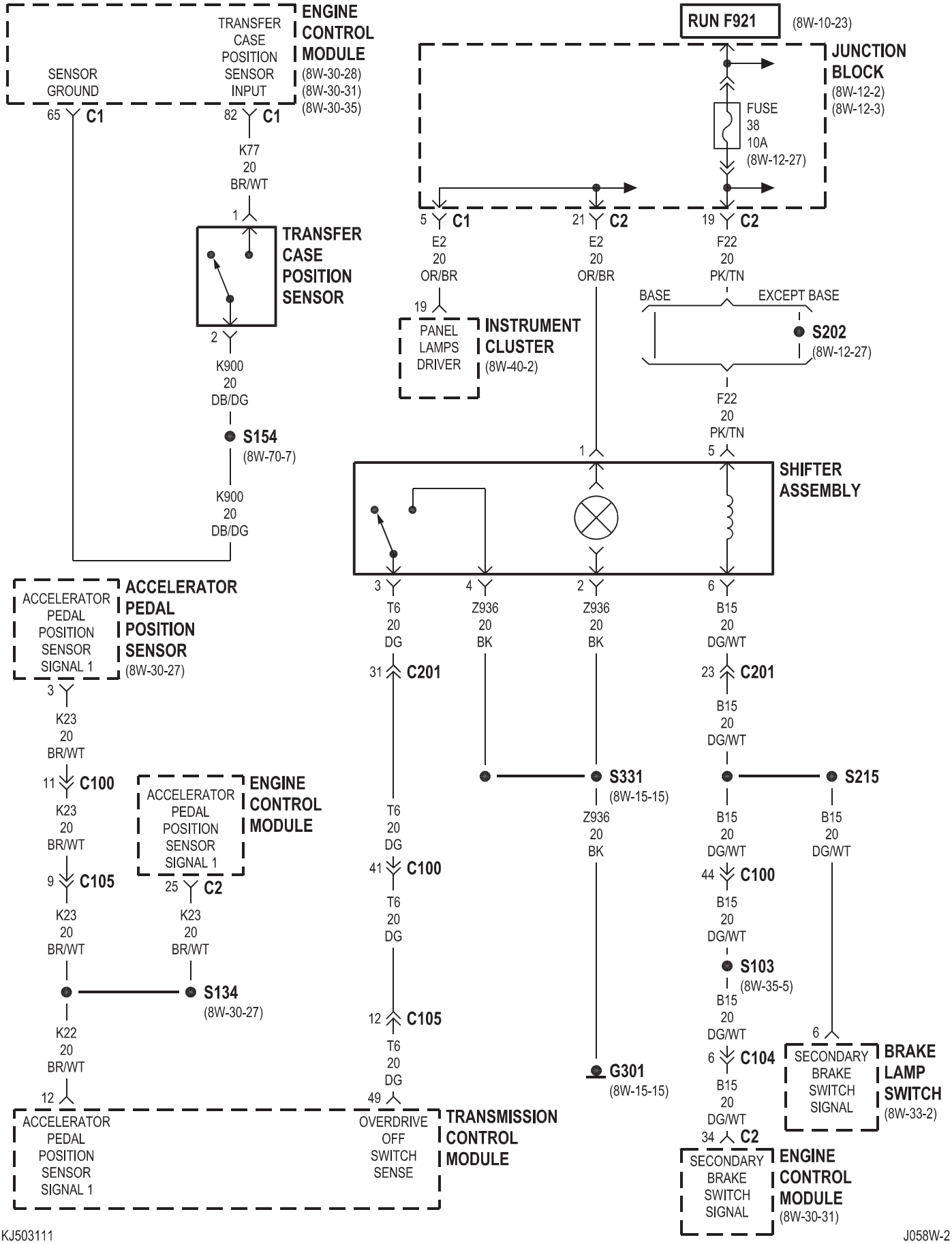
ENGINE CONTROL MODULE
(8W-30-28)
(8W-30-31)
(8W-30-35)
SENSOR GROUND
TRANSFER CASE POSITION SENSOR INPUT
65 C1
82 C1
K77
20
BR/WT
1
TRANSFER CASE POSITION SENSOR
2
K900
20
DB/DG
S154
(8W-70-7)
K900
20
DB/DG
RUN F921
(8W-10-23)
JUNCTION BLOCK
(8W-12-2)
(8W-12-3)
FUSE
38
10A
(8W-12-27)
5 C1
21 C2
19 C2
E2
20
OR/BR
E2
20
OR/BR
F22
20
PK/TN
19
PANEL LAMPS DRIVER
INSTRUMENT CLUSTER
(8W-40-2)
BASE
EXCEPT BASE
S202
(8W-12-27)
F22
20
PK/TN
1
5
SHIFTER ASSEMBLY
ACCELERATOR PEDAL POSITION SENSOR SIGNAL 1
ACCELERATOR PEDAL POSITION SENSOR
(8W-30-27)
3
4
2
6
T6
20
DG
Z936
20
BK
Z936
20
BK
B15
20
DG/WT
31 C201
23 C201
3
K23
20
BR/WT
B15
20
DG/WT
11 C100
ACCELERATOR PEDAL POSITION SENSOR SIGNAL 1
ENGINE CONTROL MODULE
S331
(8W-15-15)
S215
K23
20
BR/WT
T6
20
DG
Z936
20
BK
B15
20
DG/WT
B15
20
DG/WT
9 C105
25 C2
41 C100
44 C100
K23
20
BR/WT
K23
20
BR/WT
T6
20
DG
B15
20
DG/WT
S134
(8W-30-27)
S103
(8W-35-5)
B15
20
DG/WT
K22
20
BR/WT
12 C105
6
6 C104
SECONDARY BRAKE SWITCH SIGNAL
BRAKE LAMP SWITCH
(8W-33-2)
T6
20
DG
G301
(8W-15-15)
B15
20
DG/WT
12
49
34 C2
ACCELERATOR PEDAL POSITION SENSOR SIGNAL 1
OVERDRIVE OFF SWITCH SENSE
TRANSMISSION CONTROL MODULE
SECONDARY BRAKE SWITCH SIGNAL
ENGINE CONTROL MODULE
(8W-30-31)

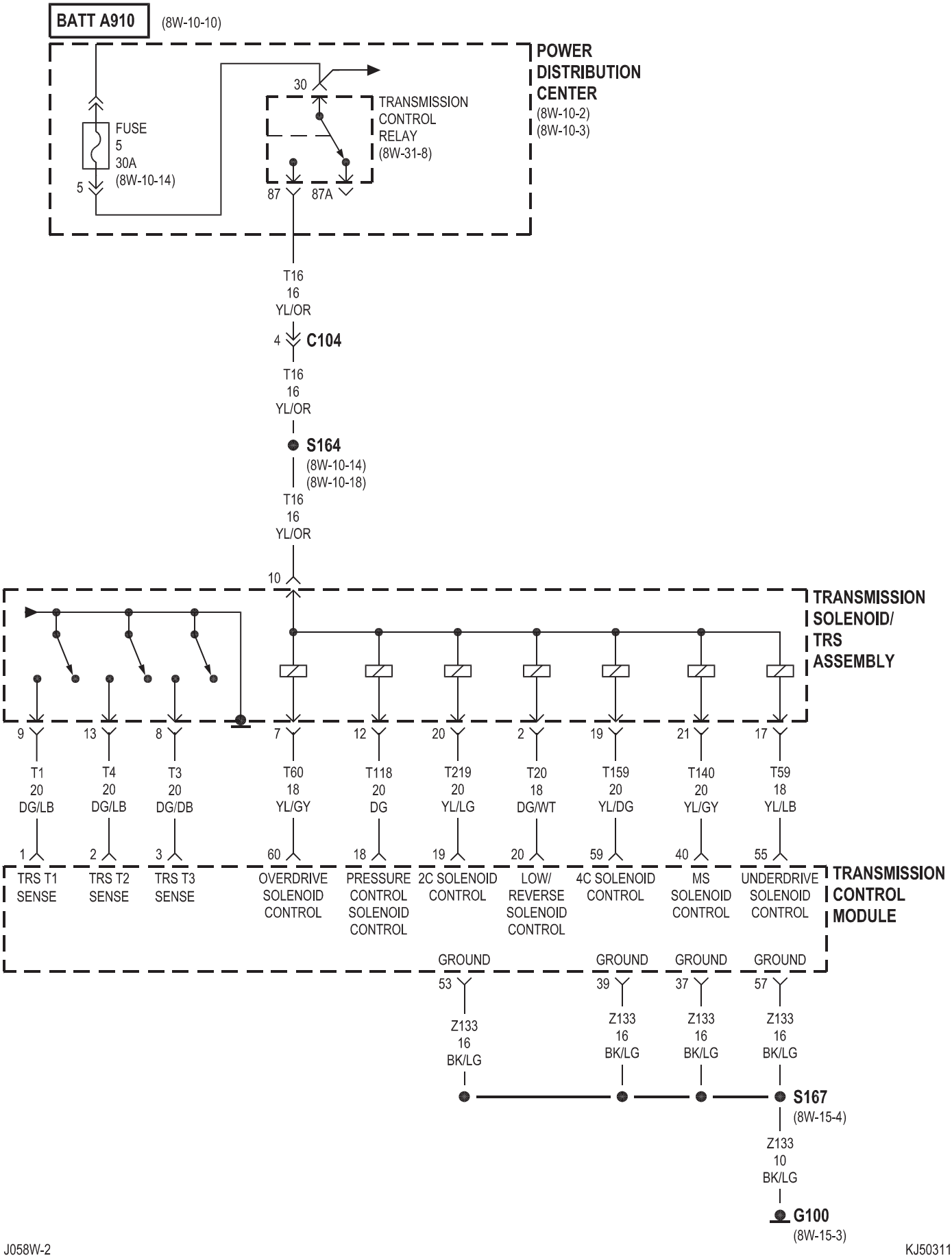
BATT A910
(8W-10-10)
POWER DISTRIBUTION CENTER
(8W-10-2)
(8W-10-3)
FUSE 5 30A
(8W-10-14)
5
30
TRANSMISSION CONTROL RELAY
(8W-31-8)
87
87A
T16 16 YL/OR
4
C104
T16 16 YL/OR
S164
(8W-10-14)
(8W-10-18)
T16 16 YL/OR
10
TRANSMISSION SOLENOID/ TRS ASSEMBLY
9
13
8
7
12
20
2
19
21
17
T1 20 DG/LB
T4 20 DG/LB
T3 20 DG/DB
T60 18 YL/GY
T118 20 DG
T219 20 YL/LG
T20 18 DG/WT
T159 20 YL/DG
T140 20 YL/GY
T59 18 YL/LB
1
2
3
60
18
19
20
59
40
55
TRS T1 SENSE
TRS T2 SENSE
TRS T3 SENSE
OVERDRIVE SOLENOID CONTROL
PRESSURE CONTROL SOLENOID CONTROL
2C SOLENOID CONTROL
LOW/ REVERSE SOLENOID CONTROL
4C SOLENOID CONTROL
MS SOLENOID CONTROL
UNDERDRIVE SOLENOID CONTROL
TRANSMISSION CONTROL MODULE
GROUND
GROUND
GROUND
GROUND
53
39
37
57
Z133 16 BK/LG
Z133 16 BK/LG
Z133 16 BK/LG
Z133 16 BK/LG
S167
(8W-15-4)
Z133 10 BK/LG
G100
(8W-15-3)

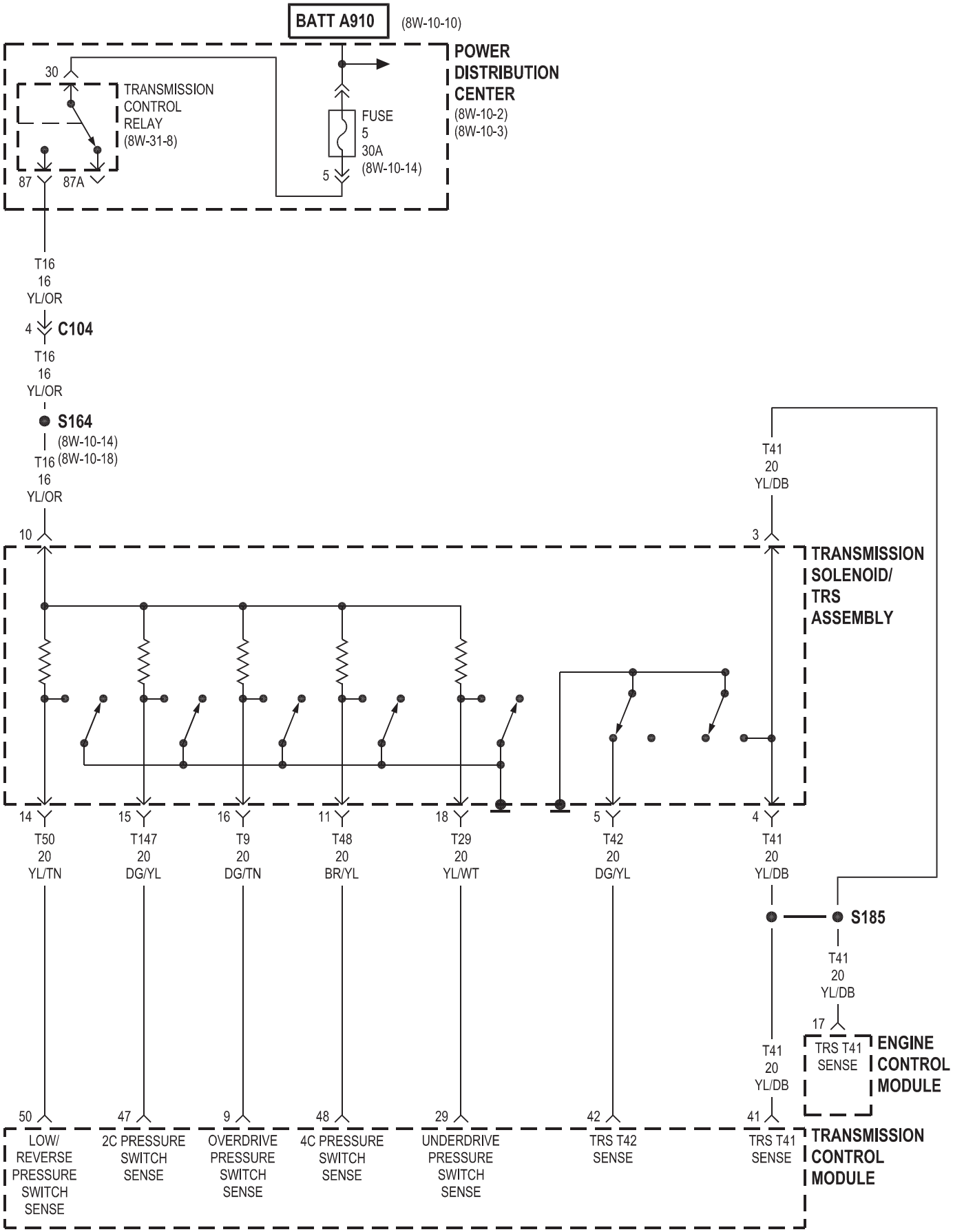
BATT A910
(8W-10-10)
POWER DISTRIBUTION CENTER
(8W-10-2)
(8W-10-3)
30
TRANSMISSION CONTROL RELAY
(8W-31-8)
87
87A
FUSE 5 30A
(8W-10-14)
5
T16 16 YL/OR
4
C104
T16 16 YL/OR
S164
(8W-10-14)
(8W-10-18)
T16 16 YL/OR
10
T41 20 YL/DB
3
TRANSMISSION SOLENOID/ TRS ASSEMBLY
14
15
16
11
18
5
4
T50 20 YL/TN
T147 20 DG/YL
T9 20 DG/TN
T48 20 BR/YL
T29 20 YL/WT
T42 20 DG/YL
T41 20 YL/DB
S185
T41 20 YL/DB
17
TRS T41 SENSE
ENGINE CONTROL MODULE
T41 20 YL/DB
50
47
9
48
29
42
41
LOW/ REVERSE PRESSURE SWITCH SENSE
2C PRESSURE SWITCH SENSE
OVERDRIVE PRESSURE SWITCH SENSE
4C PRESSURE SWITCH SENSE
UNDERDRIVE PRESSURE SWITCH SENSE
TRS T42 SENSE
TRS T41 SENSE
TRANSMISSION CONTROL MODULE

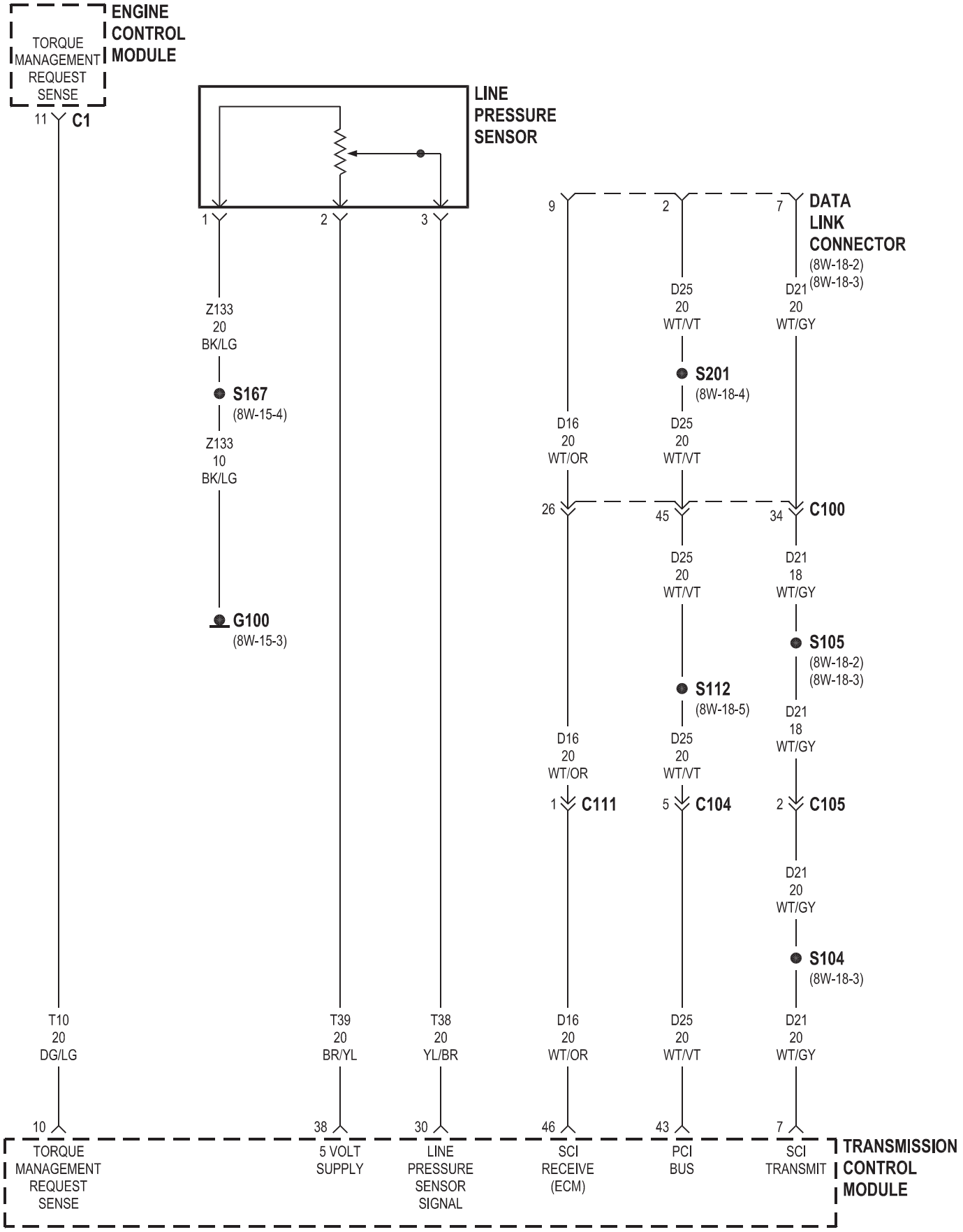
ENGINE CONTROL MODULE
TORQUE MANAGEMENT REQUEST SENSE
11
C1
LINE PRESSURE SENSOR
1
2
3
Z133 20 BK/LG
S167
(8W-15-4)
Z133 10 BK/LG
G100
(8W-15-3)
9
2
7
DATA LINK CONNECTOR
(8W-18-2)
(8W-18-3)
D25 20 WT/VT
D21 20 WT/GY
S201
(8W-18-4)
D16 20 WT/OR
D25 20 WT/VT
26
45
34
C100
D25 20 WT/VT
D21 18 WT/GY
S105
(8W-18-2)
(8W-18-3)
S112
(8W-18-5)
D21 18 WT/GY
D16 20 WT/OR
D25 20 WT/VT
1
C111
5
C104
2
C105
D21 20 WT/GY
S104
(8W-18-3)
T10 20 DG/LG
T39 20 BR/YL
T38 20 YL/BR
D16 20 WT/OR
D25 20 WT/VT
D21 20 WT/GY
10
38
30
46
43
7
TORQUE MANAGEMENT REQUEST SENSE
5 VOLT SUPPLY
LINE PRESSURE SENSOR SIGNAL
SCI RECEIVE (ECM)
PCI BUS
SCI TRANSMIT
TRANSMISSION CONTROL MODULE

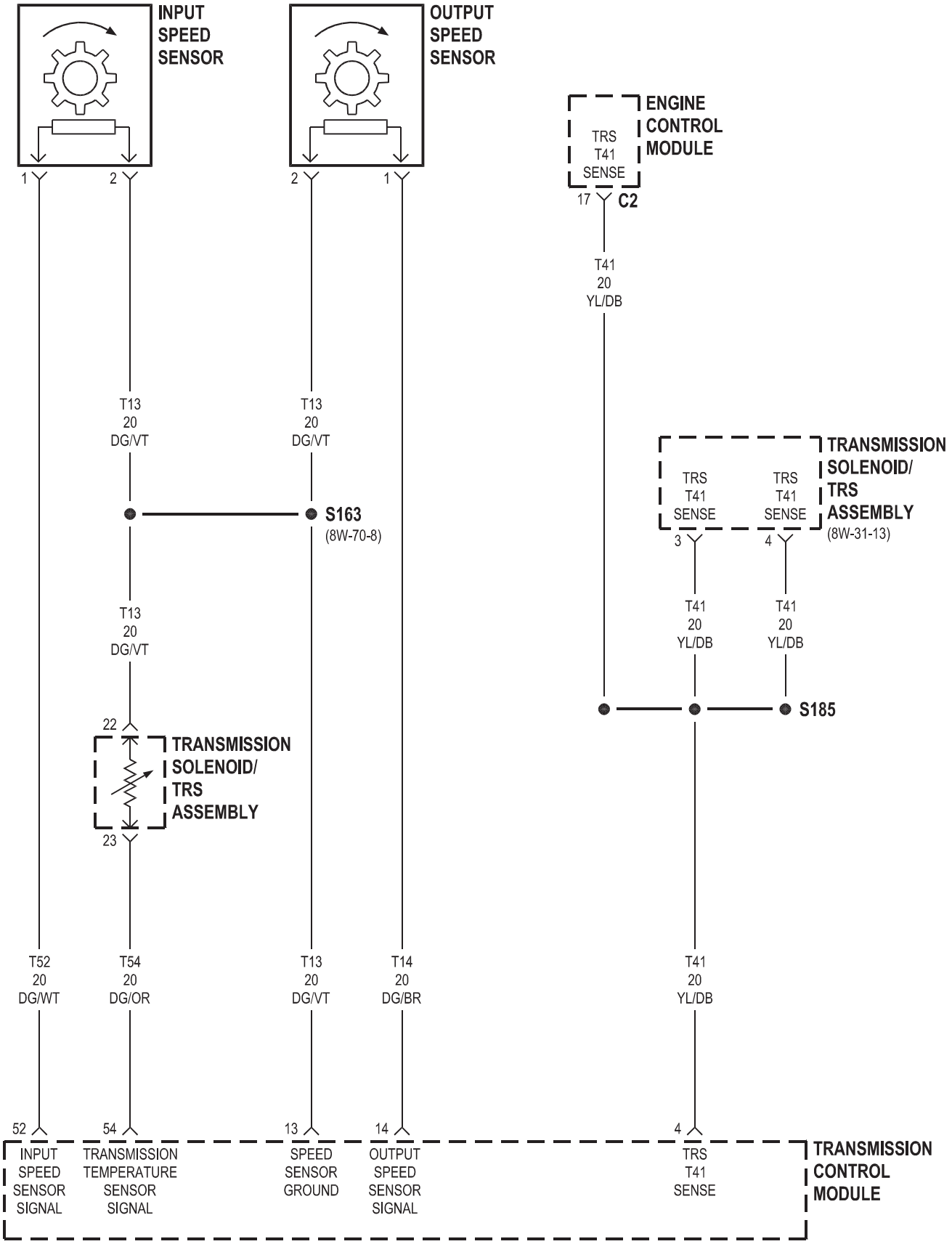
INPUT SPEED SENSOR
OUTPUT SPEED SENSOR
ENGINE CONTROL MODULE
TRS T41 SENSE
17
C2
T41 20 YL/DB
1
2
2
1
T13 20 DG/VT
T13 20 DG/VT
S163
(8W-70-8)
TRANSMISSION SOLENOID/ TRS ASSEMBLY
(8W-31-13)
TRS T41 SENSE
TRS T41 SENSE
3
4
T41 20 YL/DB
T41 20 YL/DB
S185
T13 20 DG/VT
22
TRANSMISSION SOLENOID/ TRS ASSEMBLY
23
T52 20 DG/WT
T54 20 DG/OR
T13 20 DG/VT
T14 20 DG/BR
T41 20 YL/DB
52
54
13
14
4
INPUT SPEED SENSOR SIGNAL
TRANSMISSION TEMPERATURE SENSOR SIGNAL
SPEED SENSOR GROUND
OUTPUT SPEED SENSOR SIGNAL
TRS T41 SENSE
TRANSMISSION CONTROL MODULE

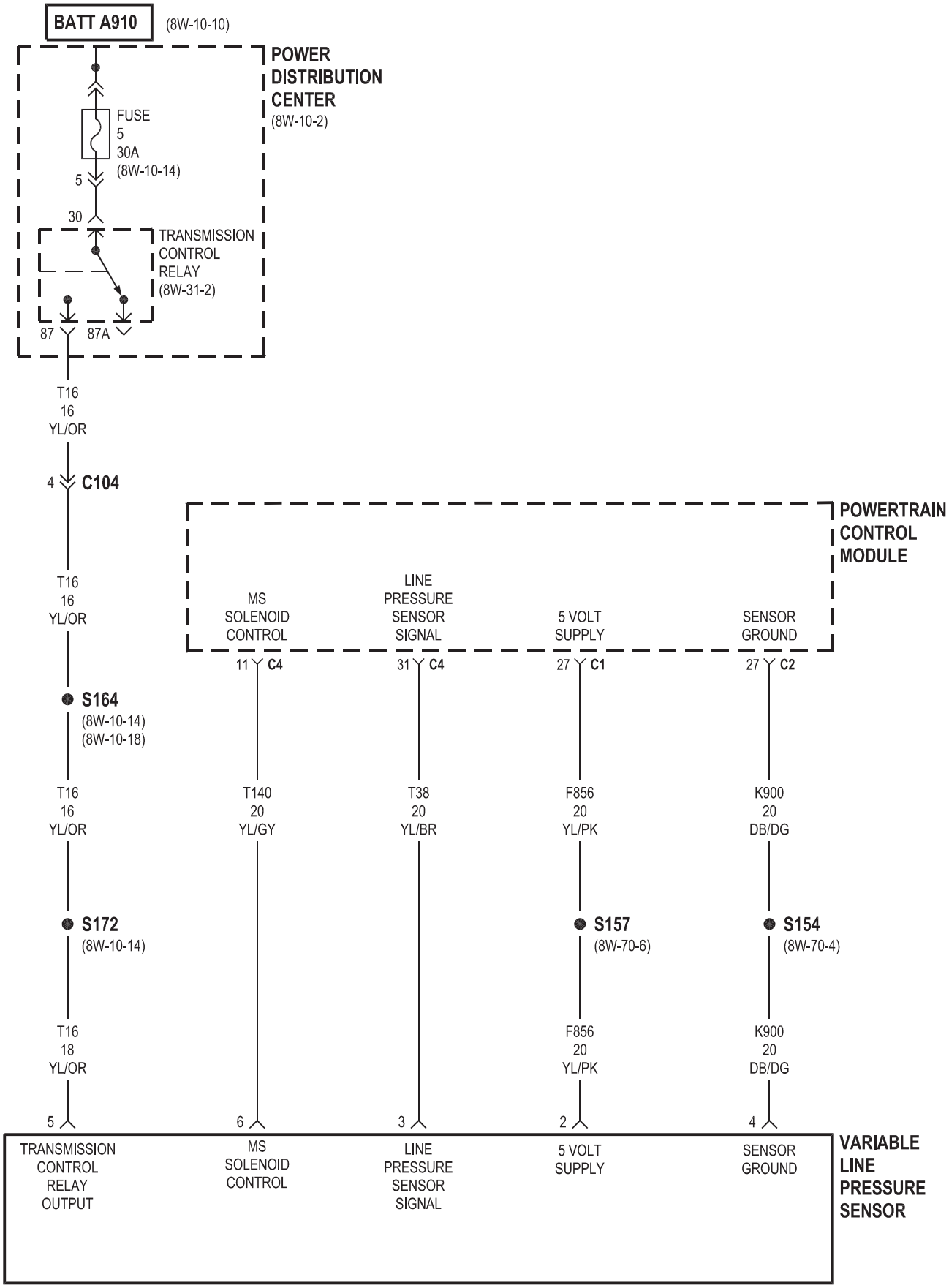
BATT A910
(8W-10-10)
POWER DISTRIBUTION CENTER
(8W-10-2)
FUSE 5 30A
(8W-10-14)
5
30
TRANSMISSION CONTROL RELAY
(8W-31-2)
87
87A
T16 16 YL/OR
4
C104
T16 16 YL/OR
POWERTRAIN CONTROL MODULE
MS SOLENOID CONTROL
LINE PRESSURE SENSOR SIGNAL
5 VOLT SUPPLY
SENSOR GROUND
11 C4
31 C4
27 C1
27 C2
S164
(8W-10-14)
(8W-10-18)
T16 16 YL/OR
T140 20 YL/GY
T38 20 YL/BR
F856 20 YL/PK
K900 20 DB/DG
S172
(8W-10-14)
S157
(8W-70-6)
S154
(8W-70-4)
T16 18 YL/OR
F856 20 YL/PK
K900 20 DB/DG
5
6
3
2
4
TRANSMISSION CONTROL RELAY OUTPUT
MS SOLENOID CONTROL
LINE PRESSURE SENSOR SIGNAL
5 VOLT SUPPLY
SENSOR GROUND
VARIABLE LINE PRESSURE SENSOR

8W-33 VEHICLE SPEED CONTROL

Component	Page
Anti-Lock Brake Module	8W-33-3
Body Control Module	8W-33-3
Brake Lamp Switch	8W-33-2
Clockspring	8W-33-3, 4, 5
Engine Control Module	8W-33-2, 4
Fuse 12	8W-33-2
G112	8W-33-2
G202	8W-33-2
Junction Block	8W-33-2
Left Speed Control Switch	8W-33-5
Powertrain Control Module	8W-33-2, 3
Right Speed Control Switch	8W-33-5
Shifter Assembly	8W-33-2
Speed Control Servo	8W-33-2

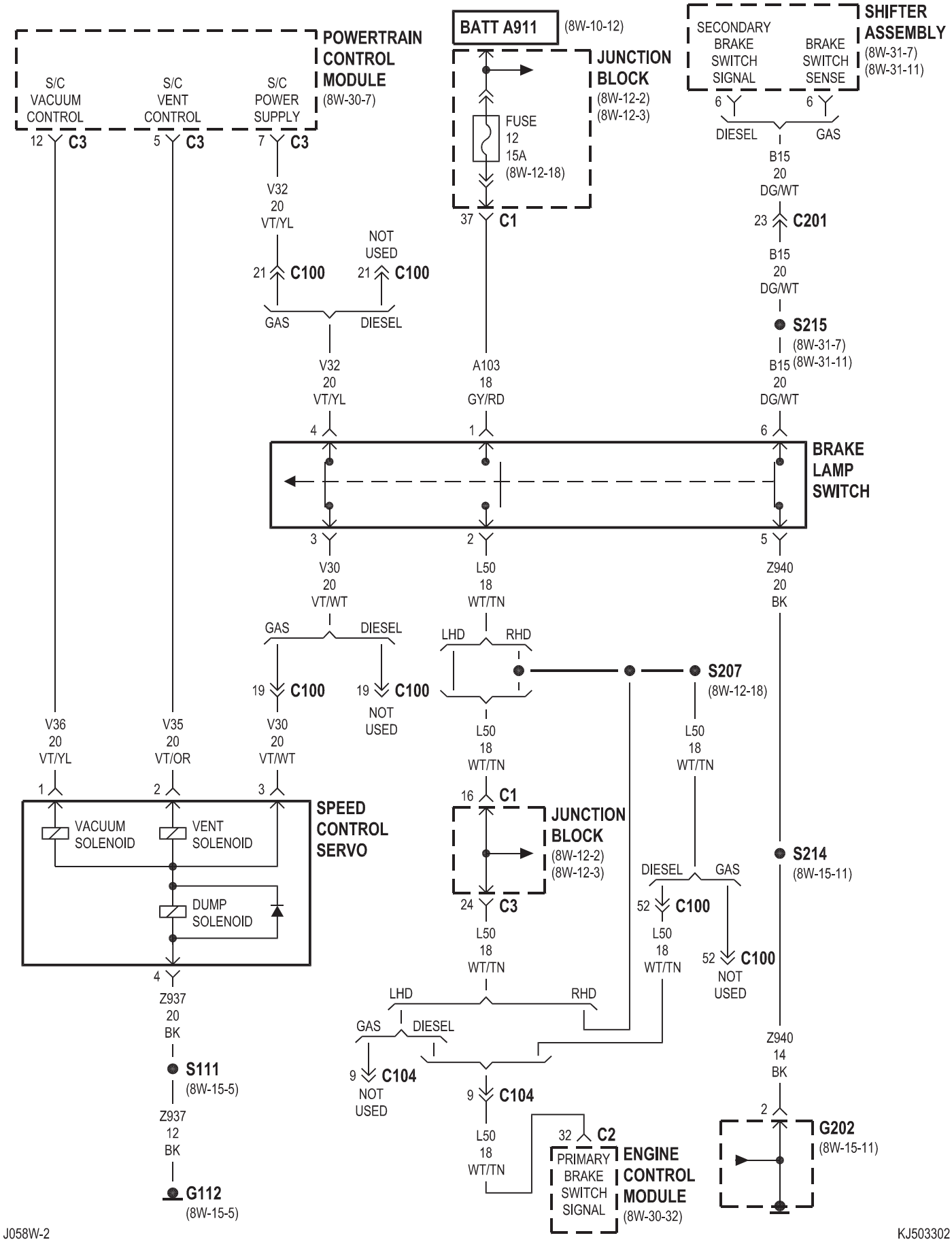
POWERTRAIN CONTROL MODULE
(8W-30-7)
S/C VACUUM CONTROL
S/C VENT CONTROL
S/C POWER SUPPLY
12 C3
5 C3
7 C3
BATT A911
(8W-10-12)
JUNCTION BLOCK
(8W-12-2)
(8W-12-3)
FUSE 12 15A
(8W-12-18)
37 C1
SHIFTER ASSEMBLY
(8W-31-7)
(8W-31-11)
SECONDARY BRAKE SWITCH SIGNAL
BRAKE SWITCH SENSE
6
6
DIESEL
GAS
B15 20 DG/WT
23 C201
B15 20 DG/WT
S215
(8W-31-7)
(8W-31-11)
V32 20 VT/YL
21 C100
NOT USED
21 C100
GAS
DIESEL
V32 20 VT/YL
A103 18 GY/RD
B15 20 DG/WT
4
1
6
BRAKE LAMP SWITCH
3
2
5
V30 20 VT/WT
L50 18 WT/TN
Z940 20 BK
GAS
DIESEL
LHD
RHD
S207
(8W-12-18)
19 C100
19 C100
NOT USED
L50 18 WT/TN
L50 18 WT/TN
V36 20 VT/YL
V35 20 VT/OR
V30 20 VT/WT
1
2
3
SPEED CONTROL SERVO
VACUUM SOLENOID
VENT SOLENOID
DUMP SOLENOID
16 C1
JUNCTION BLOCK
(8W-12-2)
(8W-12-3)
24 C3
L50 18 WT/TN
DIESEL
GAS
52 C100
L50 18 WT/TN
52 C100
NOT USED
S214
(8W-15-11)
4
Z937 20 BK
LHD
RHD
GAS
DIESEL
9 C104
NOT USED
9 C104
L50 18 WT/TN
Z940 14 BK
2
G202
(8W-15-11)
S111
(8W-15-5)
Z937 12 BK
G112
(8W-15-5)
32 C2
PRIMARY BRAKE SWITCH SIGNAL
ENGINE CONTROL MODULE
(8W-30-32)

GAS EXCEPT BASE

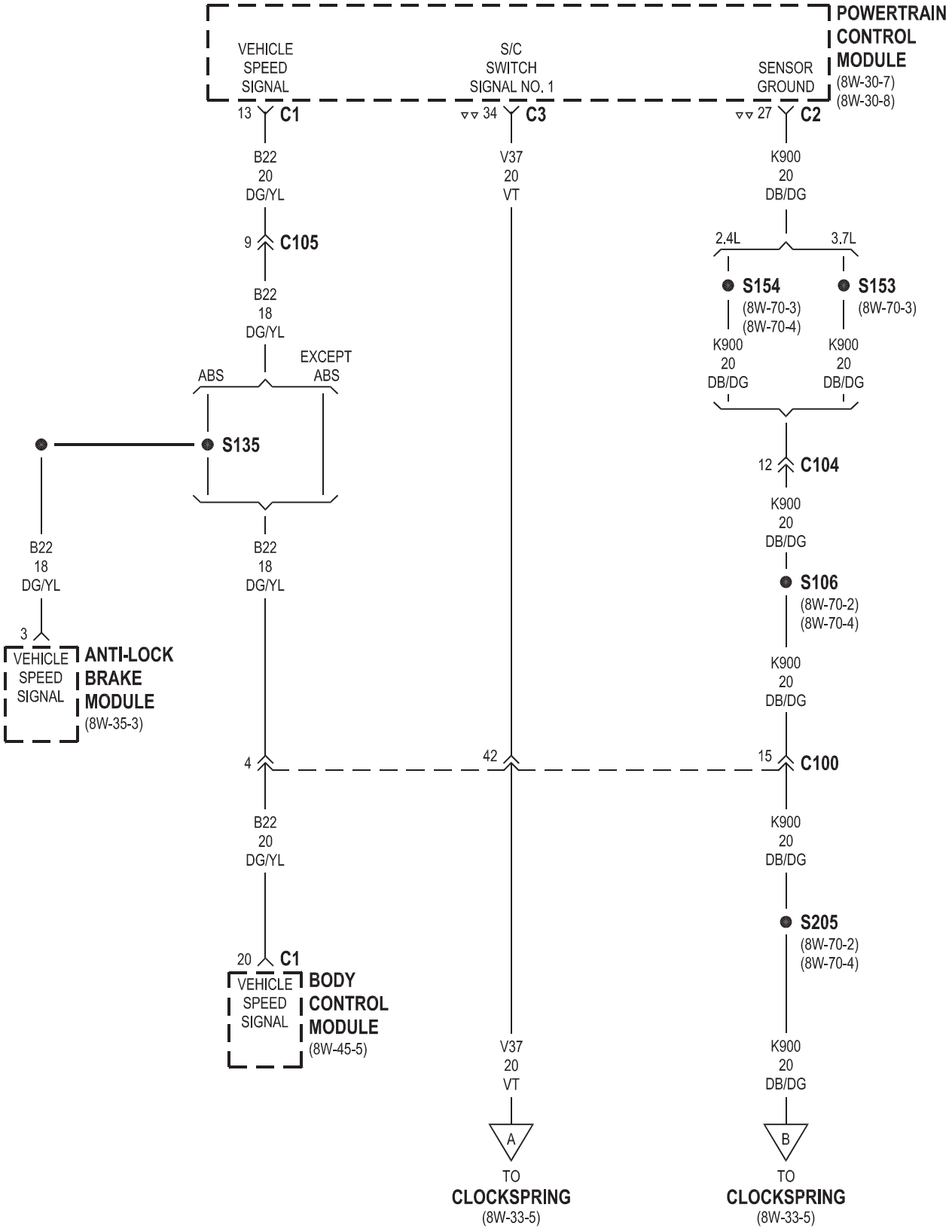

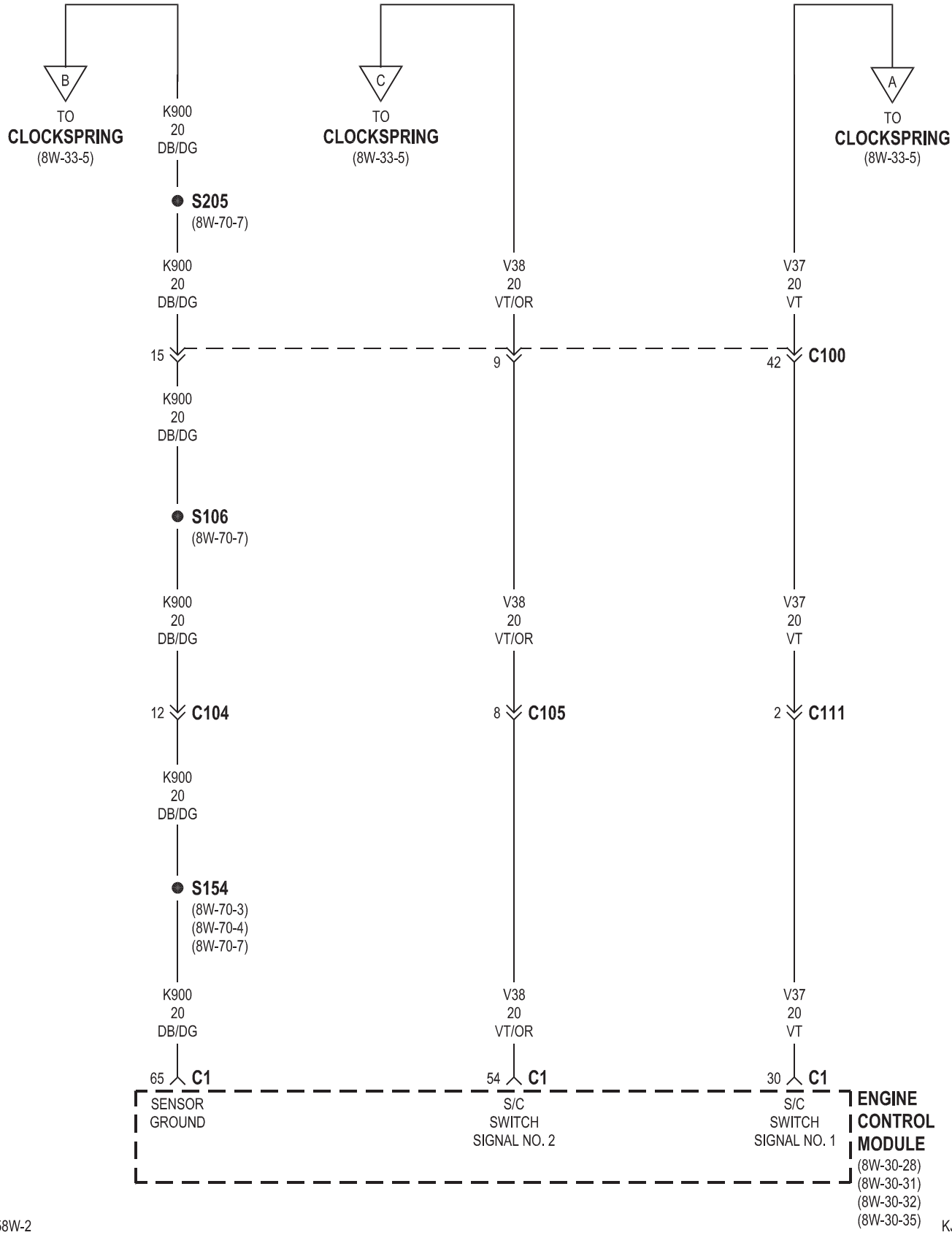
B
TO
CLOCKSPRING
(8W-33-5)
C
TO
CLOCKSPRING
(8W-33-5)
A
TO
CLOCKSPRING
(8W-33-5)
K900
20
DB/DG
S205
(8W-70-7)
K900
20
DB/DG
V38
20
VT/OR
V37
20
VT
15
9
42
C100
K900
20
DB/DG
S106
(8W-70-7)
K900
20
DB/DG
V38
20
VT/OR
V37
20
VT
12
C104
8
C105
2
C111
K900
20
DB/DG
S154
(8W-70-3)
(8W-70-4)
(8W-70-7)
K900
20
DB/DG
V38
20
VT/OR
V37
20
VT
65
C1
SENSOR
GROUND
54
C1
S/C
SWITCH
SIGNAL NO. 2
30
C1
S/C
SWITCH
SIGNAL NO. 1
ENGINE
CONTROL
MODULE
(8W-30-28)
(8W-30-31)
(8W-30-32)
(8W-30-35)

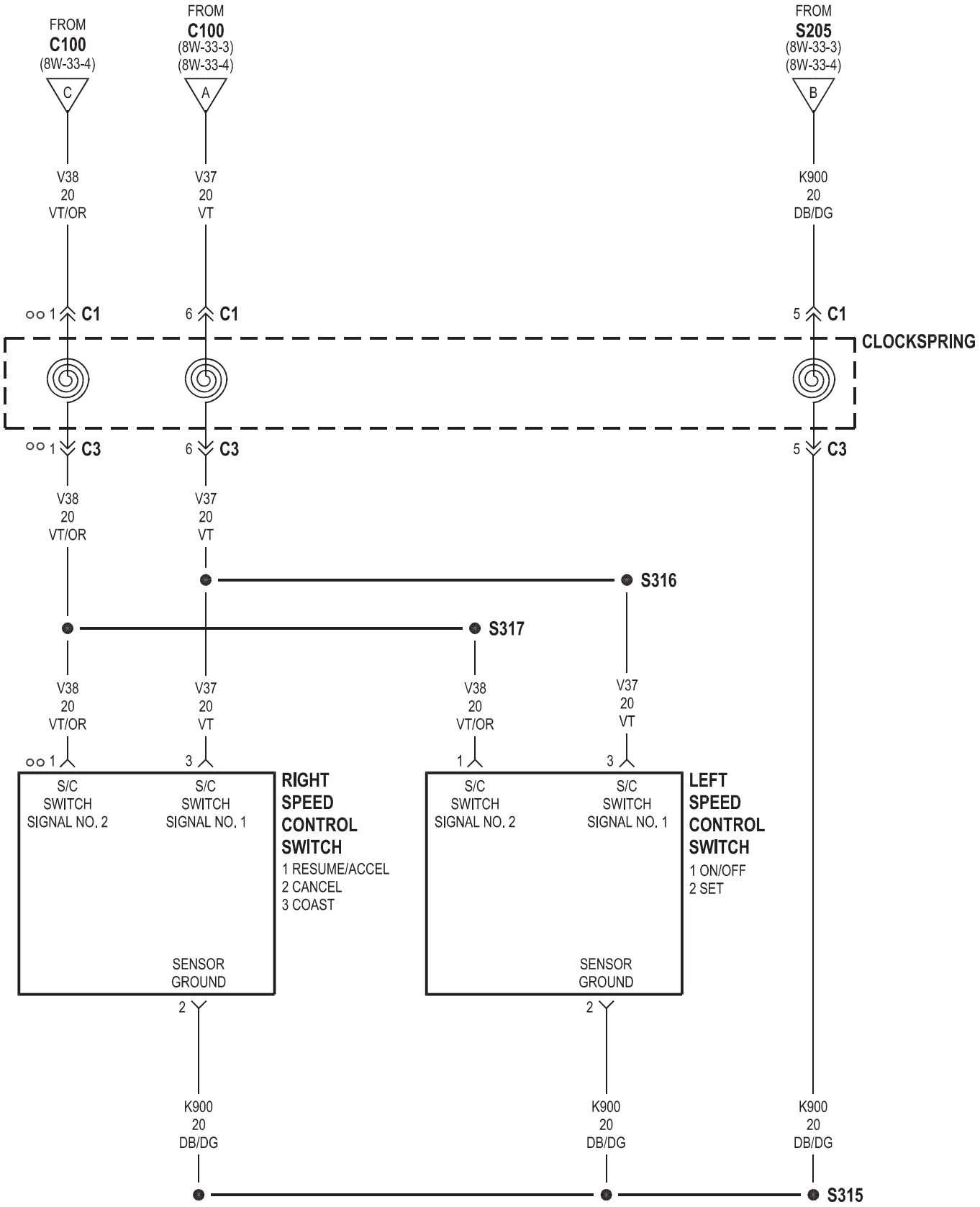
FROM
C100
(8W-33-4)
C
FROM
C100
(8W-33-3)
(8W-33-4)
A
FROM
S205
(8W-33-3)
(8W-33-4)
B
V38
20
VT/OR
V37
20
VT
K900
20
DB/DG
1 C1
6 C1
5 C1
CLOCKSPRING
1 C3
6 C3
5 C3
V38
20
VT/OR
V37
20
VT
S316
S317
V38
20
VT/OR
V37
20
VT
V38
20
VT/OR
V37
20
VT
1
3
1
3
S/C
SWITCH
SIGNAL NO. 2
S/C
SWITCH
SIGNAL NO. 1
RIGHT
SPEED
CONTROL
SWITCH
1 RESUME/ACCEL
2 CANCEL
3 COAST
SENSOR
GROUND
S/C
SWITCH
SIGNAL NO. 2
S/C
SWITCH
SIGNAL NO. 1
LEFT
SPEED
CONTROL
SWITCH
1 ON/OFF
2 SET
SENSOR
GROUND
2
2
K900
20
DB/DG
K900
20
DB/DG
K900
20
DB/DG
S315

8W-35 ANTILOCK BRAKES

Component	Page
Anti-Lock Brake Module	8W-35-2, 3, 4, 5
Body Control Module	8W-35-2, 3
Brake Lamp Switch	8W-35-3, 5
Data Link Connector	8W-35-5
Engine Control Module	8W-35-3, 5
Fuse 4	8W-35-2
Fuse 12	8W-35-3
Fuse 25	8W-35-2
Fuse 38	8W-35-2
G110	8W-35-2
G202	8W-35-3
Junction Block	8W-35-2, 3
Left Front Wheel Speed Sensor	8W-35-4
Power Distribution Center	8W-35-2
Powertrain Control Module	8W-35-3, 5
Rear Wheel Speed Sensor	8W-35-4
Right Front Wheel Speed Sensor	8W-35-4
Shifter Assembly	8W-35-2, 3, 5
Speed Control Servo	8W-35-3

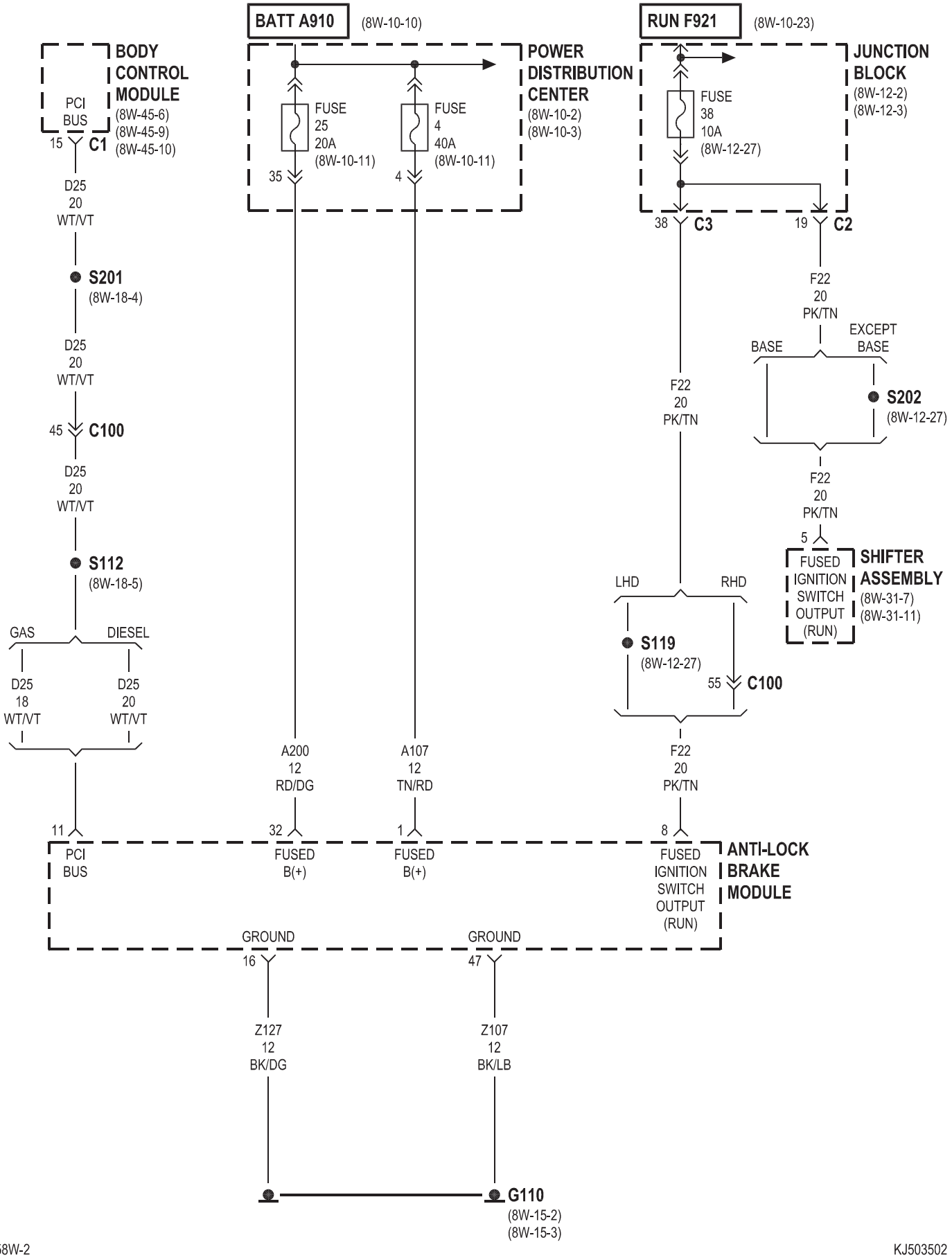
BATT A910
(8W-10-10)
RUN F921
(8W-10-23)
BODY CONTROL MODULE
(8W-45-6)
(8W-45-9)
(8W-45-10)
PCI BUS
15
C1
POWER DISTRIBUTION CENTER
(8W-10-2)
(8W-10-3)
FUSE 25 20A (8W-10-11)
FUSE 4 40A (8W-10-11)
35
4
JUNCTION BLOCK
(8W-12-2)
(8W-12-3)
FUSE 38 10A (8W-12-27)
38
C3
19
C2
D25 20 WT/VT
S201
(8W-18-4)
D25 20 WT/VT
45
C100
D25 20 WT/VT
S112
(8W-18-5)
GAS
DIESEL
D25 18 WT/VT
D25 20 WT/VT
F22 20 PK/TN
EXCEPT BASE
BASE
S202
(8W-12-27)
F22 20 PK/TN
5
FUSED IGNITION SWITCH OUTPUT (RUN)
SHIFTER ASSEMBLY
(8W-31-7)
(8W-31-11)
LHD
RHD
S119
(8W-12-27)
55
C100
A200 12 RD/DG
A107 12 TN/RD
F22 20 PK/TN
11
32
1
8
PCI BUS
FUSED B(+)
FUSED B(+)
FUSED IGNITION SWITCH OUTPUT (RUN)
ANTI-LOCK BRAKE MODULE
GROUND
16
GROUND
47
Z127 12 BK/DG
Z107 12 BK/LB
G110
(8W-15-2)
(8W-15-3)

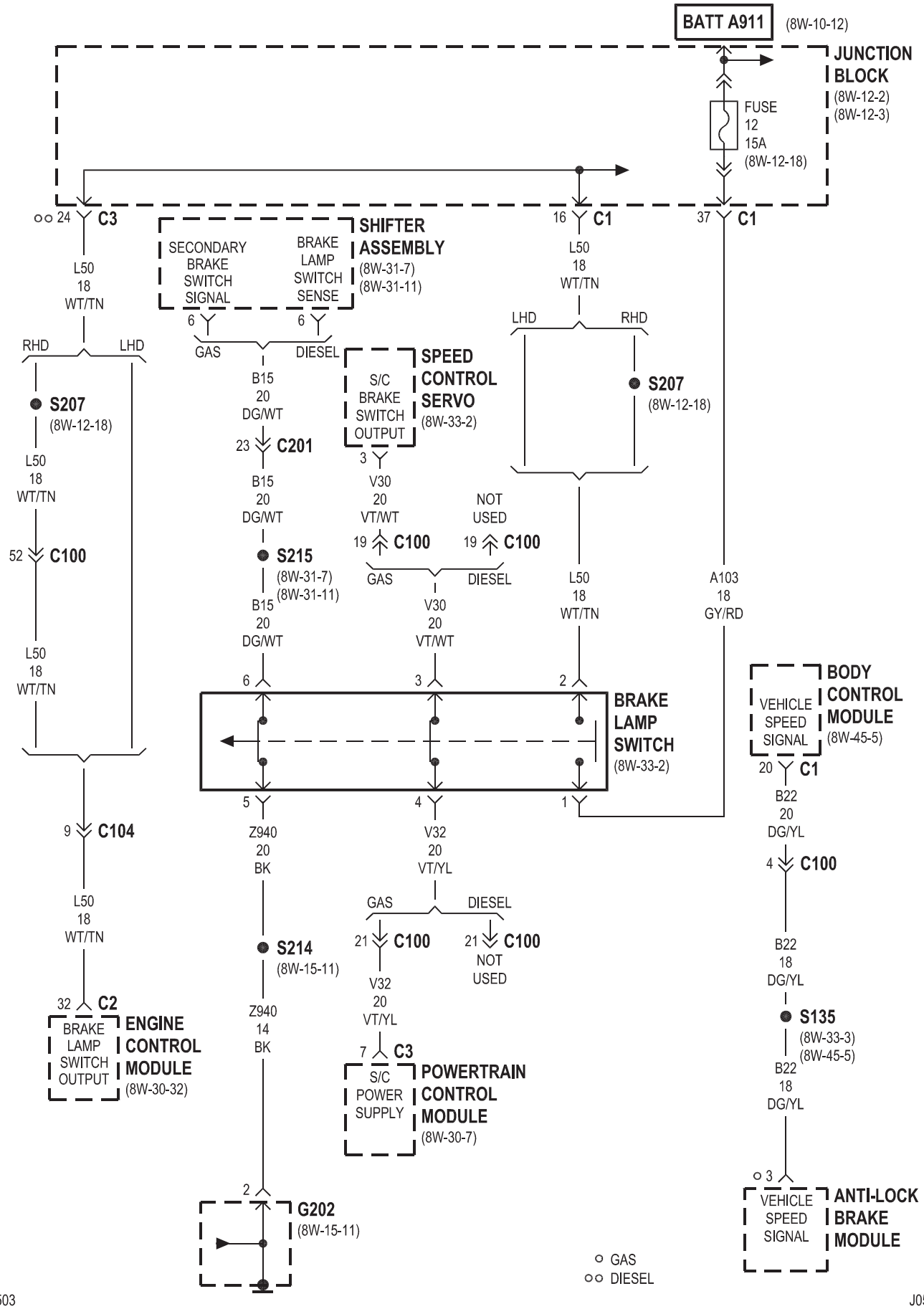
BATT A911
(8W-10-12)
JUNCTION BLOCK
(8W-12-2)
(8W-12-3)
FUSE 12 15A
(8W-12-18)
24 C3
16 C1
37 C1
L50 18 WT/TN
SHIFTER ASSEMBLY
(8W-31-7)
(8W-31-11)
SECONDARY BRAKE SWITCH SIGNAL
BRAKE LAMP SWITCH SENSE
6
6
GAS
DIESEL
RHD
LHD
S207
(8W-12-18)
B15 20 DG/WT
23 C201
SPEED CONTROL SERVO
(8W-33-2)
S/C BRAKE SWITCH OUTPUT
3
V30 20 VT/WT
NOT USED
19 C100
19 C100
52 C100
S215
(8W-31-7)
(8W-31-11)
A103 18 GY/RD
BRAKE LAMP SWITCH
(8W-33-2)
6
3
2
5
4
1
BODY CONTROL MODULE
(8W-45-5)
VEHICLE SPEED SIGNAL
20 C1
B22 20 DG/YL
4 C100
9 C104
Z940 20 BK
V32 20 VT/YL
21 C100
21 C100
S214
(8W-15-11)
32 C2
BRAKE LAMP SWITCH OUTPUT
ENGINE CONTROL MODULE
(8W-30-32)
Z940 14 BK
7 C3
S/C POWER SUPPLY
POWERTRAIN CONTROL MODULE
(8W-30-7)
B22 18 DG/YL
S135
(8W-33-3)
(8W-45-5)
3
VEHICLE SPEED SIGNAL
ANTI-LOCK BRAKE MODULE
2
G202
(8W-15-11)
GAS
DIESEL

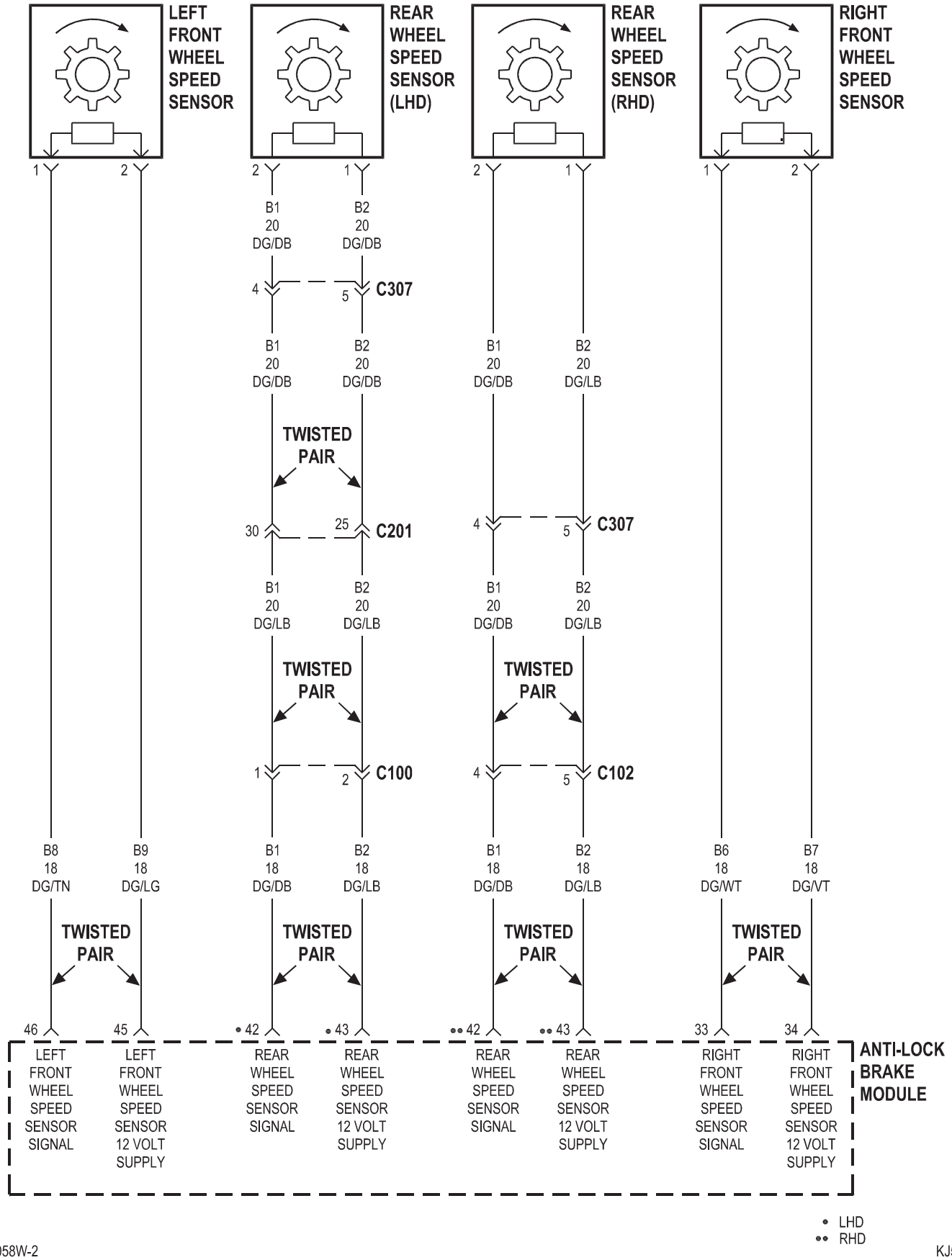
LEFT FRONT WHEEL SPEED SENSOR
REAR WHEEL SPEED SENSOR (LHD)
REAR WHEEL SPEED SENSOR (RHD)
RIGHT FRONT WHEEL SPEED SENSOR
1
2
B1 20 DG/DB
B2 20 DG/DB
4
5
C307
B1 20 DG/DB
B2 20 DG/DB
B1 20 DG/DB
B2 20 DG/LB
TWISTED PAIR
30
25
C201
4
5
C307
B1 20 DG/LB
B2 20 DG/LB
B1 20 DG/DB
B2 20 DG/LB
TWISTED PAIR
TWISTED PAIR
1
2
C100
4
5
C102
B8 18 DG/TN
B9 18 DG/LG
B1 18 DG/DB
B2 18 DG/LB
B1 18 DG/DB
B2 18 DG/LB
B6 18 DG/WT
B7 18 DG/VT
TWISTED PAIR
TWISTED PAIR
TWISTED PAIR
TWISTED PAIR
46
45
• 42
• 43
•• 42
•• 43
33
34
LEFT FRONT WHEEL SPEED SENSOR SIGNAL
LEFT FRONT WHEEL SPEED SENSOR 12 VOLT SUPPLY
REAR WHEEL SPEED SENSOR SIGNAL
REAR WHEEL SPEED SENSOR 12 VOLT SUPPLY
REAR WHEEL SPEED SENSOR SIGNAL
REAR WHEEL SPEED SENSOR 12 VOLT SUPPLY
RIGHT FRONT WHEEL SPEED SENSOR SIGNAL
RIGHT FRONT WHEEL SPEED SENSOR 12 VOLT SUPPLY
ANTI-LOCK BRAKE MODULE
• LHD
•• RHD

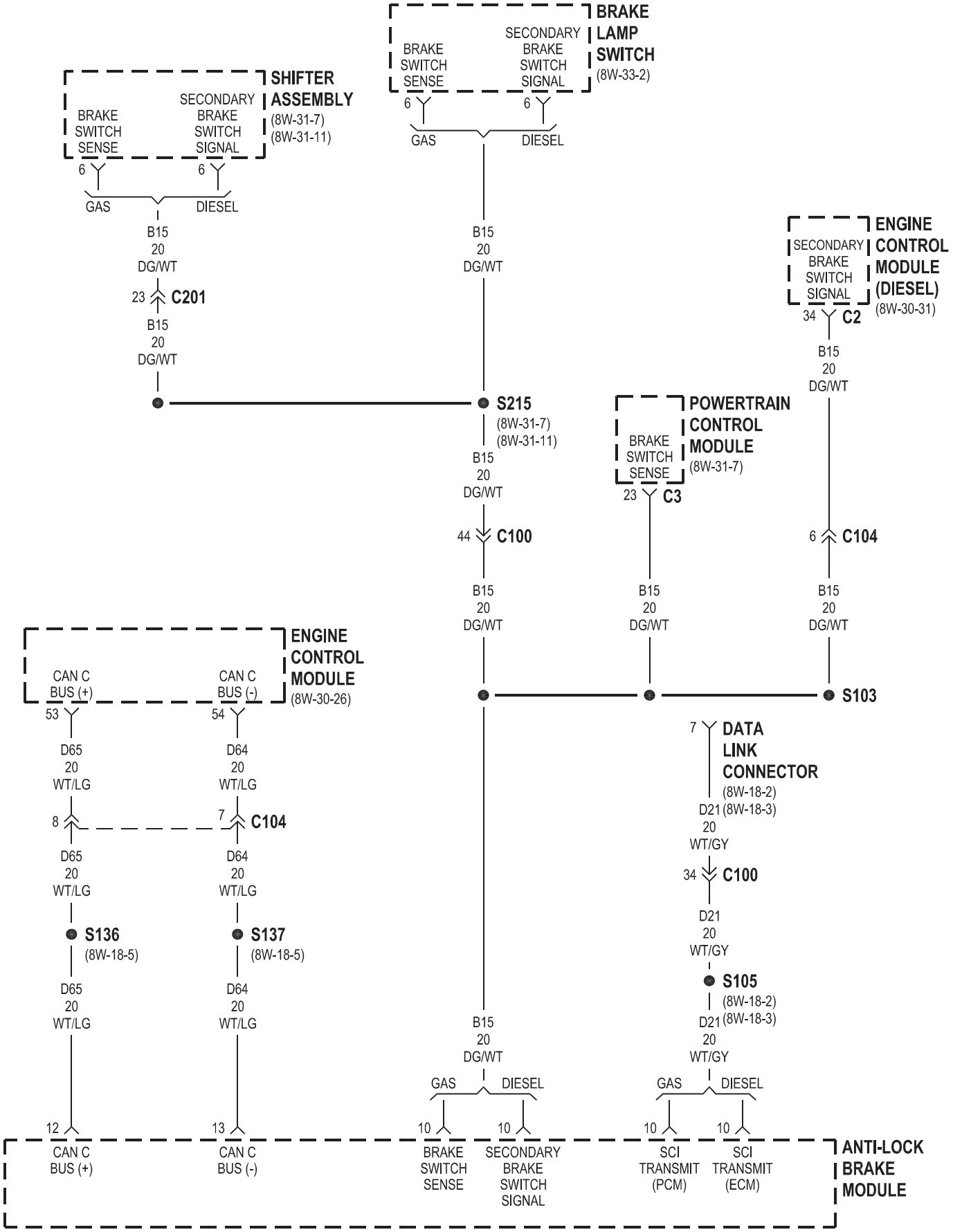
BRAKE LAMP SWITCH
(8W-33-2)
BRAKE SWITCH SENSE
SECONDARY BRAKE SWITCH SIGNAL
6
6
GAS
DIESEL
SHIFTER ASSEMBLY
(8W-31-7)
(8W-31-11)
BRAKE SWITCH SENSE
SECONDARY BRAKE SWITCH SIGNAL
6
6
GAS
DIESEL
B15
20
DG/WT
23
C201
B15
20
DG/WT
B15
20
DG/WT
ENGINE CONTROL MODULE (DIESEL)
(8W-30-31)
SECONDARY BRAKE SWITCH SIGNAL
34
C2
B15
20
DG/WT
S215
(8W-31-7)
(8W-31-11)
B15
20
DG/WT
POWERTRAIN CONTROL MODULE
(8W-31-7)
BRAKE SWITCH SENSE
23
C3
44
C100
6
C104
B15
20
DG/WT
B15
20
DG/WT
B15
20
DG/WT
ENGINE CONTROL MODULE
(8W-30-26)
CAN C BUS (+)
CAN C BUS (-)
53
54
S103
7
DATA LINK CONNECTOR
(8W-18-2)
(8W-18-3)
D65
20
WT/LG
D64
20
WT/LG
8
7
C104
D21
20
WT/GY
34
C100
D65
20
WT/LG
D64
20
WT/LG
D21
20
WT/GY
S136
(8W-18-5)
S137
(8W-18-5)
S105
(8W-18-2)
(8W-18-3)
D65
20
WT/LG
D64
20
WT/LG
B15
20
DG/WT
D21
20
WT/GY
GAS
DIESEL
GAS
DIESEL
12
13
10
10
10
10
CAN C BUS (+)
CAN C BUS (-)
BRAKE SWITCH SENSE
SECONDARY BRAKE SWITCH SIGNAL
SCI TRANSMIT (PCM)
SCI TRANSMIT (ECM)
ANTI-LOCK BRAKE MODULE

8W-39 VEHICLE THEFT SECURITY SYSTEM

Component	Page
Body Control Module	8W-39-2, 3, 4, 5, 6, 7, 11, 12
Clockspring	8W-39-6
Compass Mini-Trip Computer	8W-39-9, 10
Driver Door Lock Motor/Ajar Switch	8W-39-3, 4
Engine Control Module	8W-39-2
Flip-Up Glass Release Switch	8W-39-5
Fuse 1	8W-39-6
Fuse 7	8W-39-2
Fuse 13	8W-39-2, 7, 10
Fuse 14	8W-39-2
Fuse 28	8W-39-2
Fuse 32	8W-39-2
Fuse 33	8W-39-7
Fuse 34	8W-39-2, 8, 9
G111	8W-39-6, 8
G202	8W-39-7, 8
G300	8W-39-3, 4
G302	8W-39-3, 4
G303	8W-39-10
High Note Horn	8W-39-6
Hood Ajar Switch	8W-39-6
Horn Relay	8W-39-6
Horn Switch	8W-39-6
Ignition Switch	8W-39-2
Intrusion Transceiver Module	8W-39-8, 9
Junction Block	8W-39-2, 6, 7, 8, 9, 10, 11, 12
Left Door Lock Switch	8W-39-11, 12
Left Rear Door Lock Motor/Ajar Switch	8W-39-3, 4
Passenger Door Lock Motor/Ajar Switch	8W-39-3, 4
Power Distribution Center	8W-39-2
Powertrain Control Module	8W-39-2
Right Door Lock Switch	8W-39-11, 12
Right Rear Door Lock Motor/Ajar Switch	8W-39-3, 4
Sentry Key Remote Entry Module	8W-39-7
Siren	8W-39-8
Starter Motor Relay	8W-39-2
Tailgate Cylinder Lock Switch	8W-39-5
Tailgate Lock Motor/Ajar Switch	8W-39-5
Transponder-Tire Pressure-Left Front	8W-39-7
Transponder-Tire Pressure-Right Rear	8W-39-7

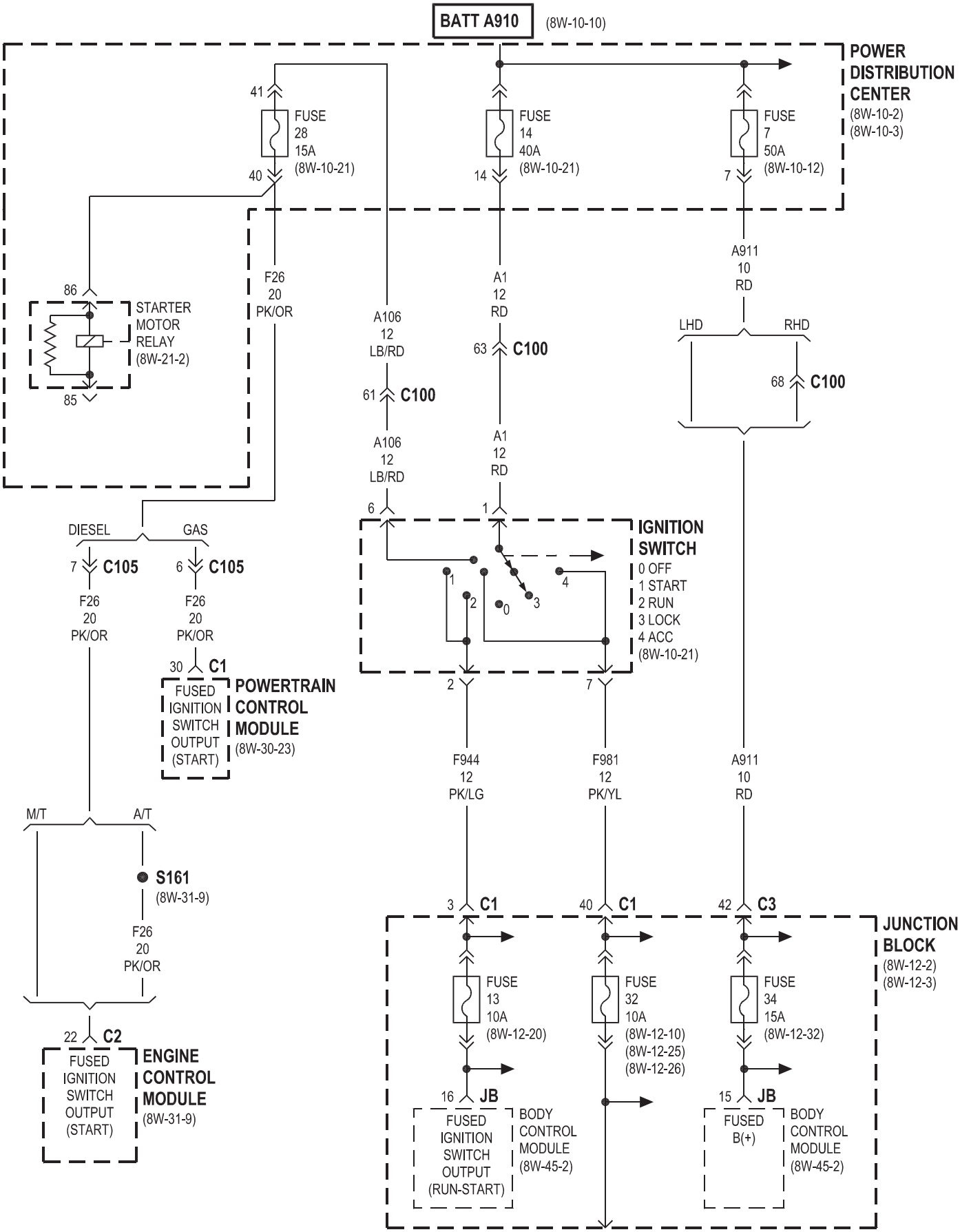
BATT A910
(8W-10-10)
POWER DISTRIBUTION CENTER
(8W-10-2)
(8W-10-3)
41
FUSE 28 15A (8W-10-21)
40
FUSE 14 40A (8W-10-21)
14
FUSE 7 50A (8W-10-12)
7
A911 10 RD
86
STARTER MOTOR RELAY (8W-21-2)
85
F26 20 PK/OR
A106 12 LB/RD
61 C100
A1 12 RD
63 C100
LHD
RHD
68 C100
A106 12 LB/RD
6
A1 12 RD
1
IGNITION SWITCH
0 OFF
1 START
2 RUN
3 LOCK
4 ACC
(8W-10-21)
DIESEL
GAS
7 C105
6 C105
F26 20 PK/OR
F26 20 PK/OR
30 C1
FUSED IGNITION SWITCH OUTPUT (START)
POWERTRAIN CONTROL MODULE
(8W-30-23)
2
7
F944 12 PK/LG
F981 12 PK/YL
A911 10 RD
M/T
A/T
S161
(8W-31-9)
F26 20 PK/OR
22 C2
FUSED IGNITION SWITCH OUTPUT (START)
ENGINE CONTROL MODULE
(8W-31-9)
3 C1
40 C1
42 C3
JUNCTION BLOCK
(8W-12-2)
(8W-12-3)
FUSE 13 10A (8W-12-20)
FUSE 32 10A (8W-12-10) (8W-12-25) (8W-12-26)
FUSE 34 15A (8W-12-32)
16 JB
FUSED IGNITION SWITCH OUTPUT (RUN-START)
BODY CONTROL MODULE (8W-45-2)
15 JB
FUSED B(+)
BODY CONTROL MODULE (8W-45-2)

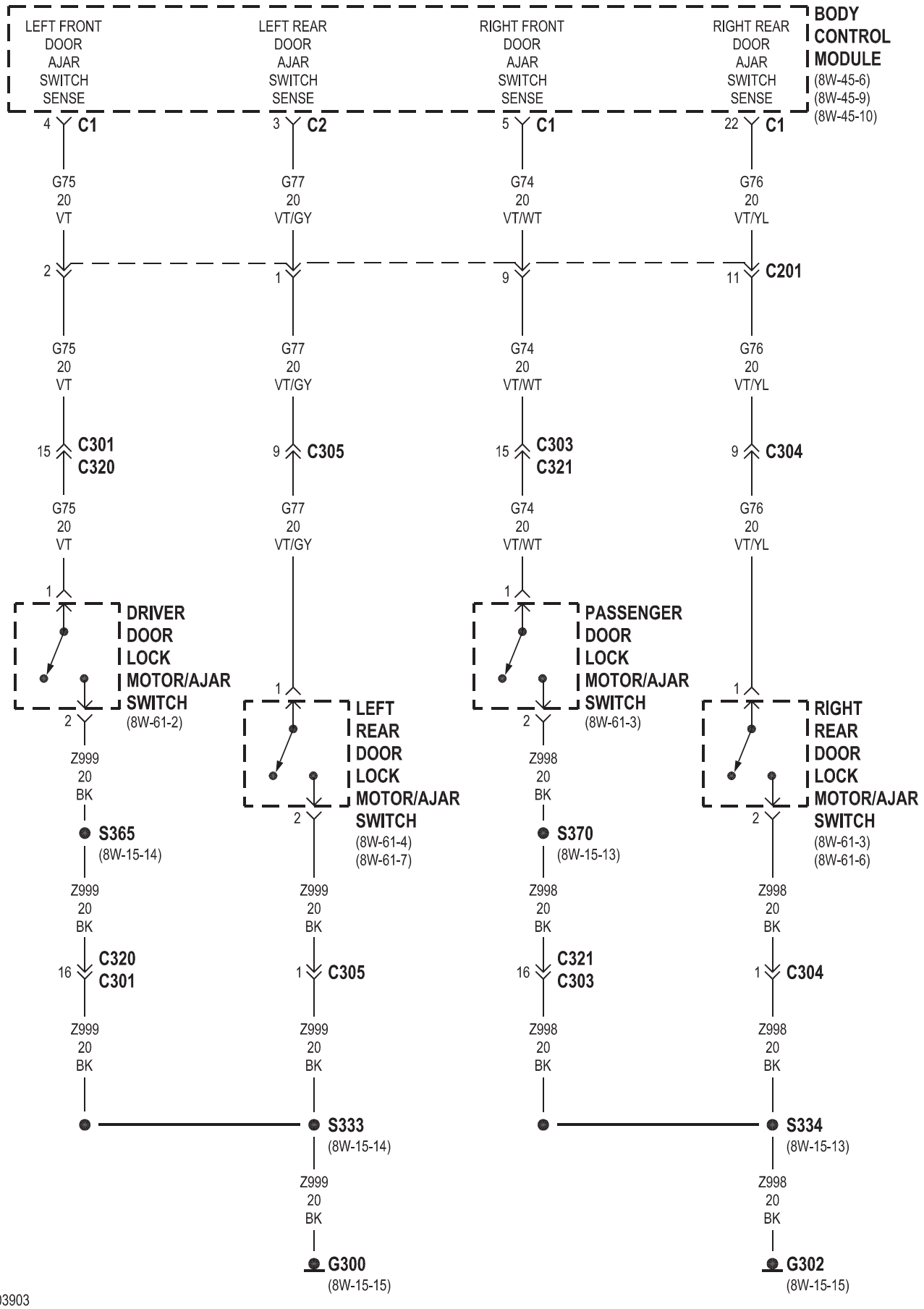
LEFT FRONT DOOR AJAR SWITCH SENSE
LEFT REAR DOOR AJAR SWITCH SENSE
RIGHT FRONT DOOR AJAR SWITCH SENSE
RIGHT REAR DOOR AJAR SWITCH SENSE
BODY CONTROL MODULE
(8W-45-6)
(8W-45-9)
(8W-45-10)
4 C1
3 C2
5 C1
22 C1
G75 20 VT
G77 20 VT/GY
G74 20 VT/WT
G76 20 VT/YL
2
1
9
11 C201
G75 20 VT
G77 20 VT/GY
G74 20 VT/WT
G76 20 VT/YL
15 C301 C320
9 C305
15 C303 C321
9 C304
G75 20 VT
G77 20 VT/GY
G74 20 VT/WT
G76 20 VT/YL
1
DRIVER DOOR LOCK MOTOR/AJAR SWITCH
(8W-61-2)
1
LEFT REAR DOOR LOCK MOTOR/AJAR SWITCH
(8W-61-4)
(8W-61-7)
1
PASSENGER DOOR LOCK MOTOR/AJAR SWITCH
(8W-61-3)
1
RIGHT REAR DOOR LOCK MOTOR/AJAR SWITCH
(8W-61-3)
(8W-61-6)
2
Z999 20 BK
2
Z998 20 BK
2
Z998 20 BK
S365
(8W-15-14)
S370
(8W-15-13)
Z999 20 BK
Z999 20 BK
Z998 20 BK
Z998 20 BK
16 C320 C301
1 C305
16 C321 C303
1 C304
Z999 20 BK
Z999 20 BK
Z998 20 BK
Z998 20 BK
S333
(8W-15-14)
S334
(8W-15-13)
Z999 20 BK
Z998 20 BK
G300
(8W-15-15)
G302
(8W-15-15)

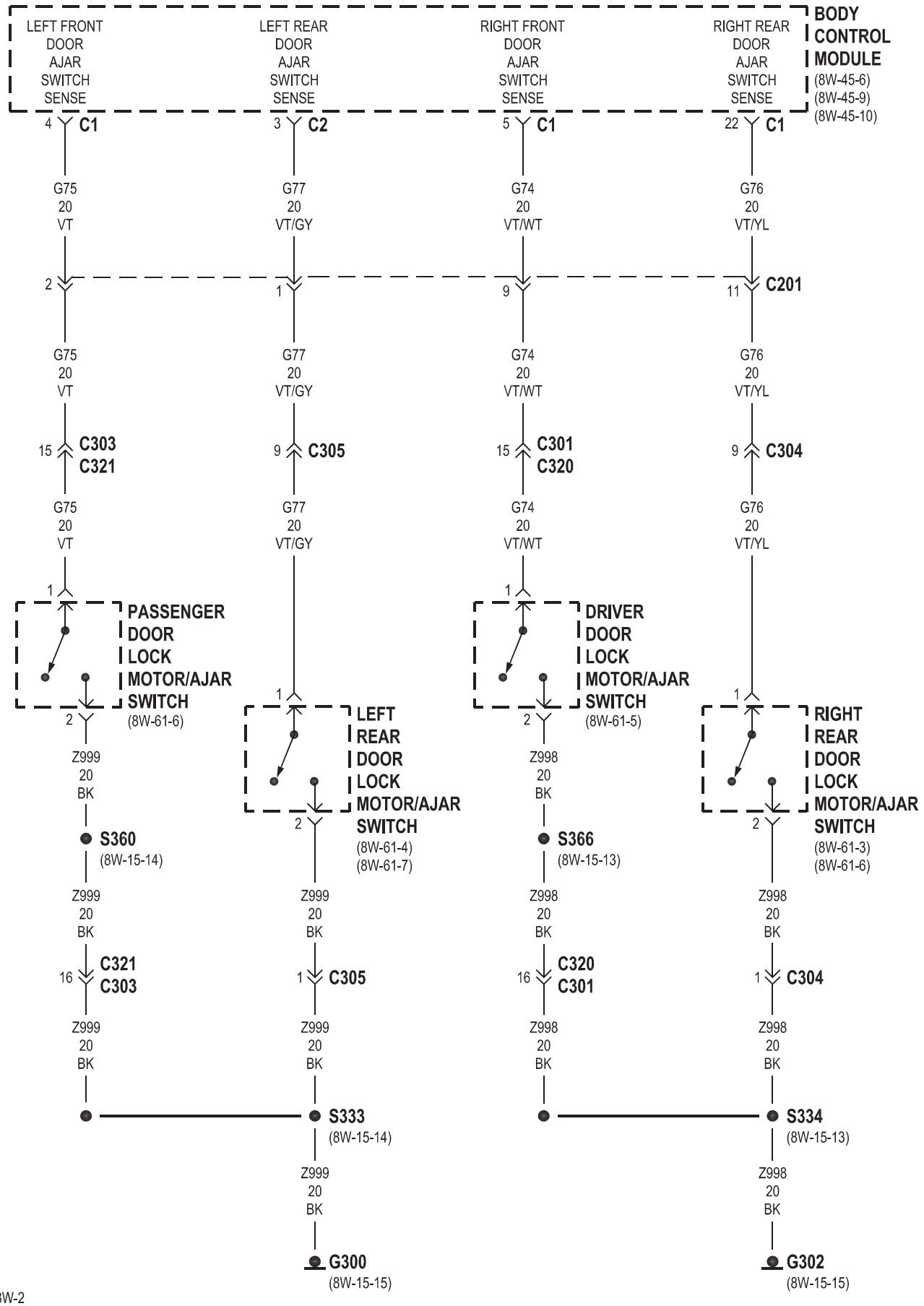
LEFT FRONT DOOR AJAR SWITCH SENSE
LEFT REAR DOOR AJAR SWITCH SENSE
RIGHT FRONT DOOR AJAR SWITCH SENSE
RIGHT REAR DOOR AJAR SWITCH SENSE
BODY CONTROL MODULE
(8W-45-6)
(8W-45-9)
(8W-45-10)
4 C1
3 C2
5 C1
22 C1
G75 20 VT
G77 20 VT/GY
G74 20 VT/WT
G76 20 VT/YL
2
1
9
11 C201
G75 20 VT
G77 20 VT/GY
G74 20 VT/WT
G76 20 VT/YL
15 C303 C321
9 C305
15 C301 C320
9 C304
G75 20 VT
G77 20 VT/GY
G74 20 VT/WT
G76 20 VT/YL
1
PASSENGER DOOR LOCK MOTOR/AJAR SWITCH
(8W-61-6)
1
DRIVER DOOR LOCK MOTOR/AJAR SWITCH
(8W-61-5)
1
LEFT REAR DOOR LOCK MOTOR/AJAR SWITCH
(8W-61-4)
(8W-61-7)
1
RIGHT REAR DOOR LOCK MOTOR/AJAR SWITCH
(8W-61-3)
(8W-61-6)
2
2
2
2
Z999 20 BK
Z998 20 BK
S360
(8W-15-14)
S366
(8W-15-13)
Z999 20 BK
Z999 20 BK
Z998 20 BK
Z998 20 BK
16 C321 C303
1 C305
16 C320 C301
1 C304
Z999 20 BK
Z999 20 BK
Z998 20 BK
Z998 20 BK
S333
(8W-15-14)
S334
(8W-15-13)
Z999 20 BK
Z998 20 BK
G300
(8W-15-15)
G302
(8W-15-15)

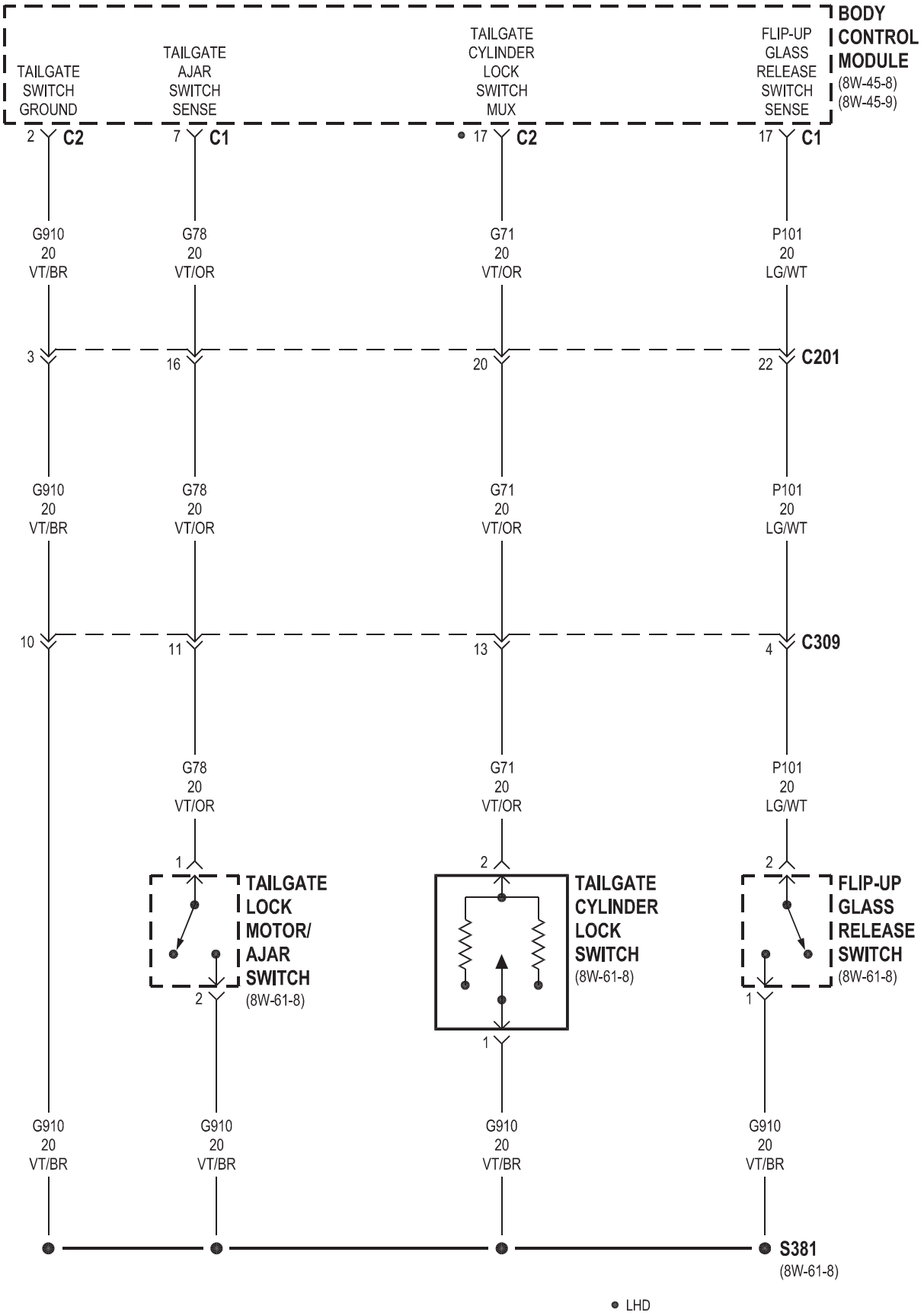
BODY CONTROL MODULE
(8W-45-8)
(8W-45-9)
TAILGATE SWITCH GROUND
TAILGATE AJAR SWITCH SENSE
TAILGATE CYLINDER LOCK SWITCH MUX
FLIP-UP GLASS RELEASE SWITCH SENSE
2 C2
7 C1
17 C2
17 C1
G910 20 VT/BR
G78 20 VT/OR
G71 20 VT/OR
P101 20 LG/WT
3
16
20
22
C201
G910 20 VT/BR
G78 20 VT/OR
G71 20 VT/OR
P101 20 LG/WT
10
11
13
4
C309
G78 20 VT/OR
G71 20 VT/OR
P101 20 LG/WT
1
2
2
TAILGATE LOCK MOTOR/ AJAR SWITCH
(8W-61-8)
TAILGATE CYLINDER LOCK SWITCH
(8W-61-8)
FLIP-UP GLASS RELEASE SWITCH
(8W-61-8)
2
1
1
G910 20 VT/BR
G910 20 VT/BR
G910 20 VT/BR
G910 20 VT/BR
S381
(8W-61-8)
LHD

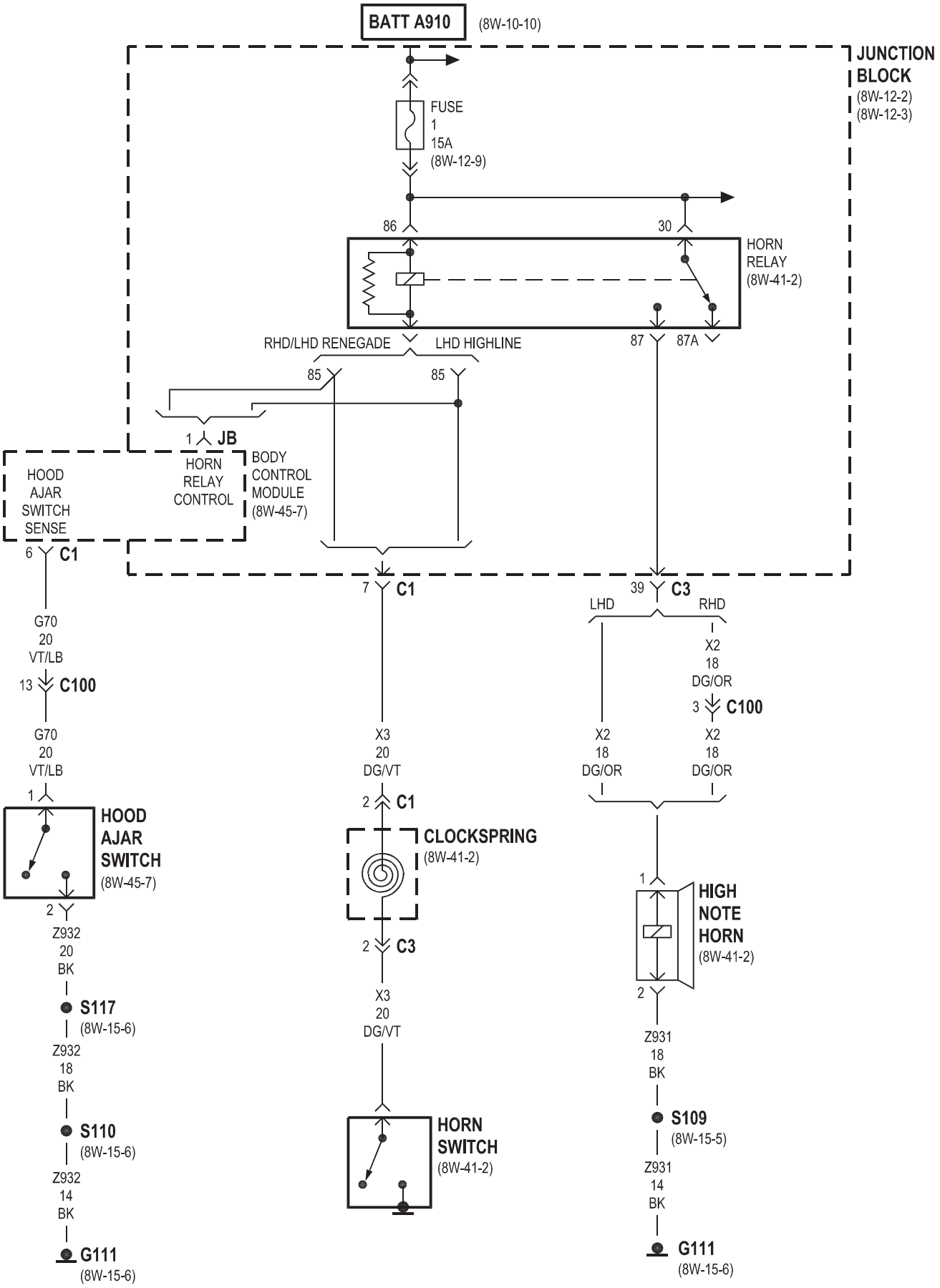
BATT A910
(8W-10-10)
JUNCTION BLOCK
(8W-12-2)
(8W-12-3)
FUSE
1
15A
(8W-12-9)
86
30
HORN RELAY
(8W-41-2)
RHD/LHD RENEGADE
LHD HIGHLINE
87
87A
85
85
1 JB
HOOD AJAR SWITCH SENSE
HORN RELAY CONTROL
BODY CONTROL MODULE
(8W-45-7)
6 C1
7 C1
39 C3
LHD
RHD
G70
20
VT/LB
13 C100
G70
20
VT/LB
1
HOOD AJAR SWITCH
(8W-45-7)
2
Z932
20
BK
S117
(8W-15-6)
Z932
18
BK
S110
(8W-15-6)
Z932
14
BK
G111
(8W-15-6)
X3
20
DG/VT
2 C1
CLOCKSPRING
(8W-41-2)
2 C3
X3
20
DG/VT
HORN SWITCH
(8W-41-2)
X2
18
DG/OR
3 C100
X2
18
DG/OR
X2
18
DG/OR
1
HIGH NOTE HORN
(8W-41-2)
2
Z931
18
BK
S109
(8W-15-5)
Z931
14
BK
G111
(8W-15-6)

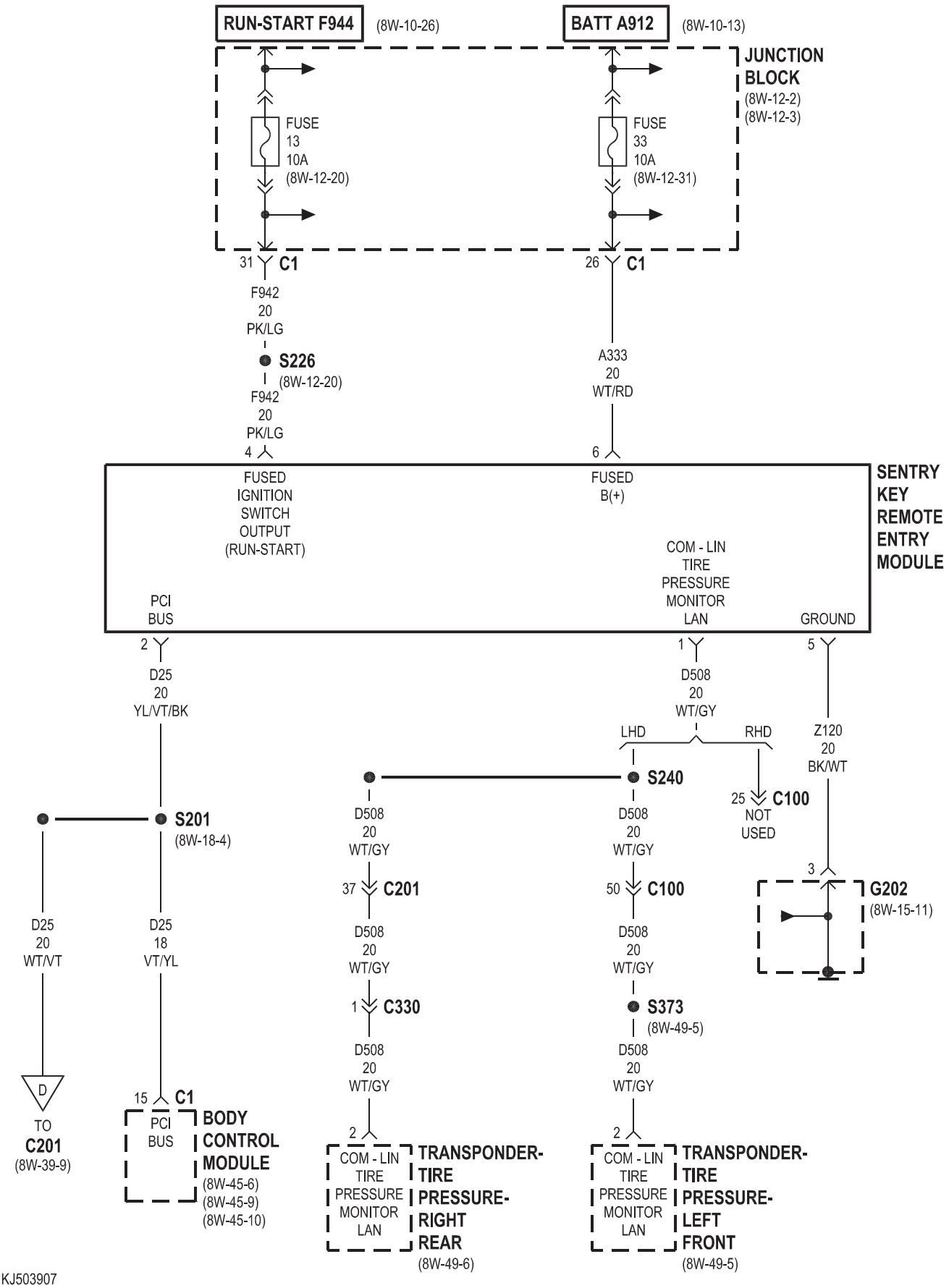
RUN-START F944
(8W-10-26)
BATT A912
(8W-10-13)
JUNCTION BLOCK
(8W-12-2)
(8W-12-3)
FUSE 13 10A (8W-12-20)
FUSE 33 10A (8W-12-31)
31 C1
26 C1
F942 20 PK/LG
S226
(8W-12-20)
F942 20 PK/LG
A333 20 WT/RD
4
6
FUSED IGNITION SWITCH OUTPUT (RUN-START)
FUSED B(+)
SENTRY KEY REMOTE ENTRY MODULE
COM - LIN TIRE PRESSURE MONITOR LAN
PCI BUS
GROUND
2
1
5
D25 20 YL/VT/BK
D508 20 WT/GY
LHD
RHD
Z120 20 BK/WT
S240
25 C100
NOT USED
S201
(8W-18-4)
D508 20 WT/GY
D508 20 WT/GY
3
G202
(8W-15-11)
37 C201
50 C100
D25 20 WT/VT
D25 18 VT/YL
D508 20 WT/GY
D508 20 WT/GY
1 C330
S373
(8W-49-5)
D508 20 WT/GY
D508 20 WT/GY
D
TO C201
(8W-39-9)
15 C1
PCI BUS
BODY CONTROL MODULE
(8W-45-6)
(8W-45-9)
(8W-45-10)
2
2
COM - LIN TIRE PRESSURE MONITOR LAN
TRANSPONDER-TIRE PRESSURE-RIGHT REAR
(8W-49-6)
COM - LIN TIRE PRESSURE MONITOR LAN
TRANSPONDER-TIRE PRESSURE-LEFT FRONT
(8W-49-5)

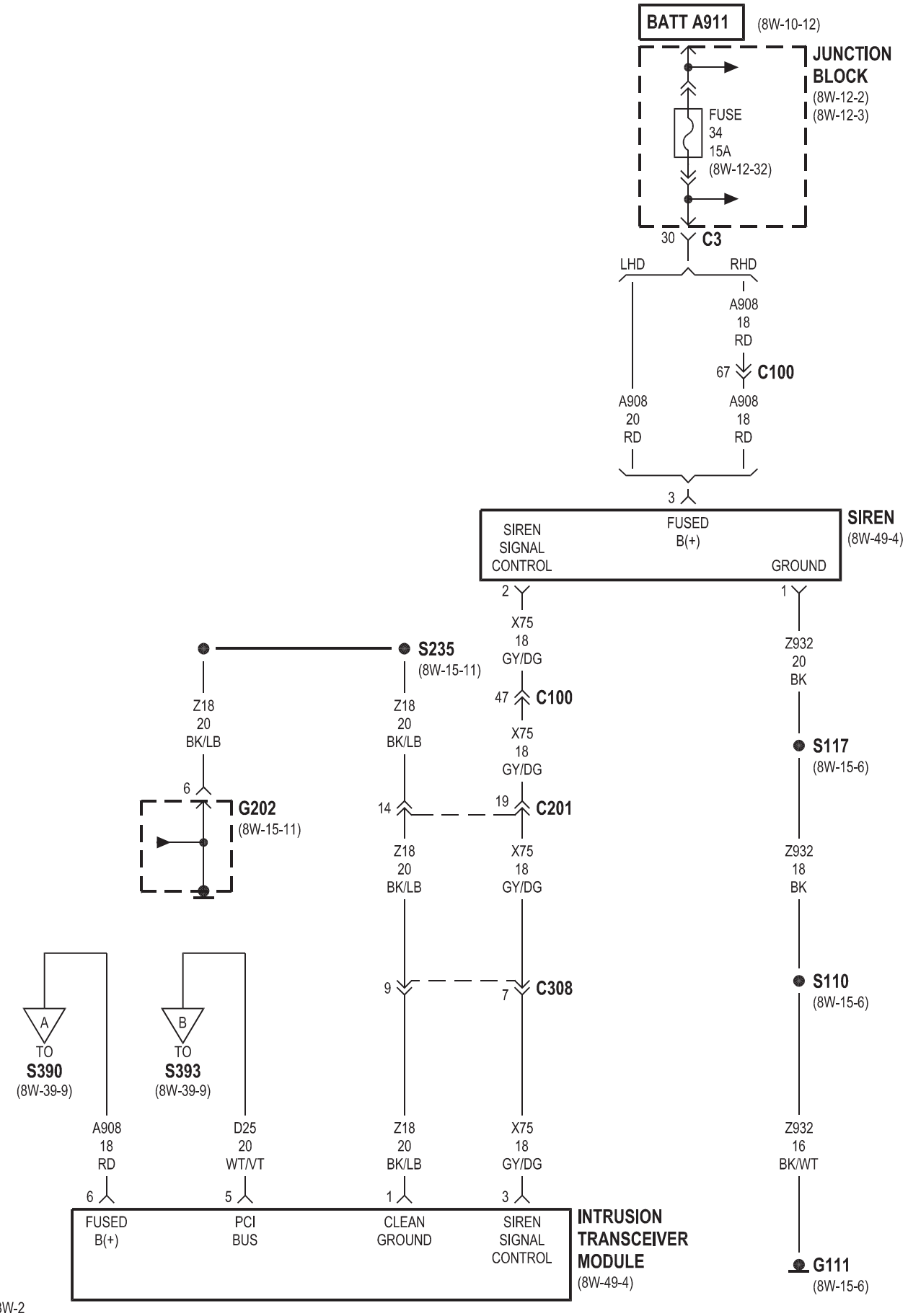
BATT A911
(8W-10-12)
JUNCTION BLOCK
(8W-12-2)
(8W-12-3)
FUSE
34
15A
(8W-12-32)
30
C3
LHD
RHD
A908
18
RD
67
C100
A908
20
RD
A908
18
RD
3
SIREN
(8W-49-4)
SIREN SIGNAL CONTROL
FUSED B(+)
GROUND
2
1
X75
18
GY/DG
Z932
20
BK
S235
(8W-15-11)
47
C100
Z18
20
BK/LB
Z18
20
BK/LB
X75
18
GY/DG
S117
(8W-15-6)
6
G202
(8W-15-11)
14
19
C201
Z18
20
BK/LB
X75
18
GY/DG
Z932
18
BK
9
7
C308
S110
(8W-15-6)
A
TO
S390
(8W-39-9)
B
TO
S393
(8W-39-9)
A908
18
RD
D25
20
WT/VT
Z18
20
BK/LB
X75
18
GY/DG
Z932
16
BK/WT
6
5
1
3
FUSED B(+)
PCI BUS
CLEAN GROUND
SIREN SIGNAL CONTROL
INTRUSION TRANSCEIVER MODULE
(8W-49-4)
G111
(8W-15-6)

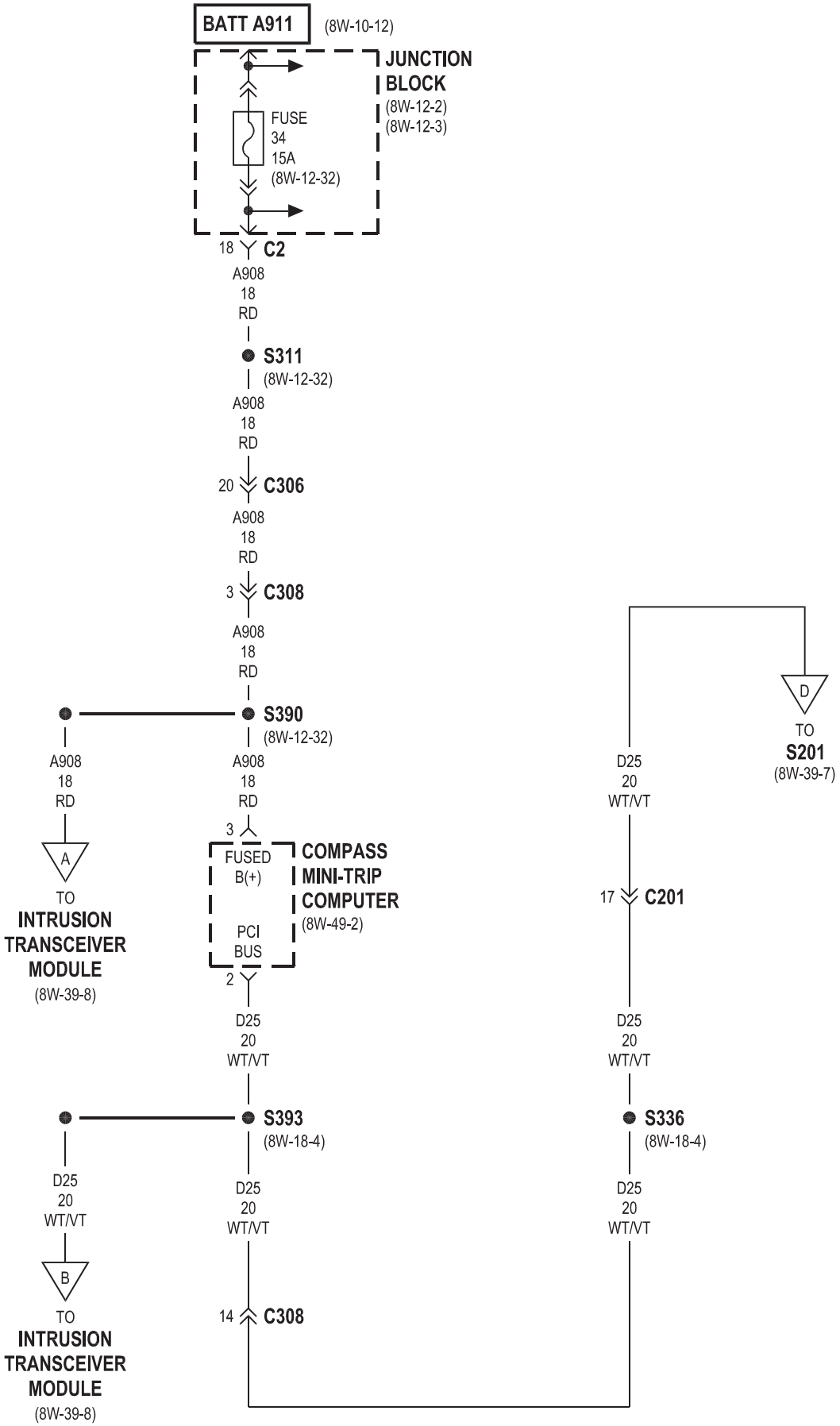
BATT A911
(8W-10-12)
JUNCTION BLOCK
(8W-12-2)
(8W-12-3)
FUSE 34 15A
(8W-12-32)
18
C2
A908 18 RD
S311
(8W-12-32)
A908 18 RD
20
C306
A908 18 RD
3
C308
A908 18 RD
S390
(8W-12-32)
A908 18 RD
A908 18 RD
A
TO
INTRUSION TRANSCEIVER MODULE
(8W-39-8)
3
FUSED B(+)
PCI BUS
COMPASS MINI-TRIP COMPUTER
(8W-49-2)
2
D25 20 WT/VT
D25 20 WT/VT
17
C201
D
TO
S201
(8W-39-7)
S393
(8W-18-4)
D25 20 WT/VT
D25 20 WT/VT
B
TO
INTRUSION TRANSCEIVER MODULE
(8W-39-8)
14
C308
S336
(8W-18-4)
D25 20 WT/VT

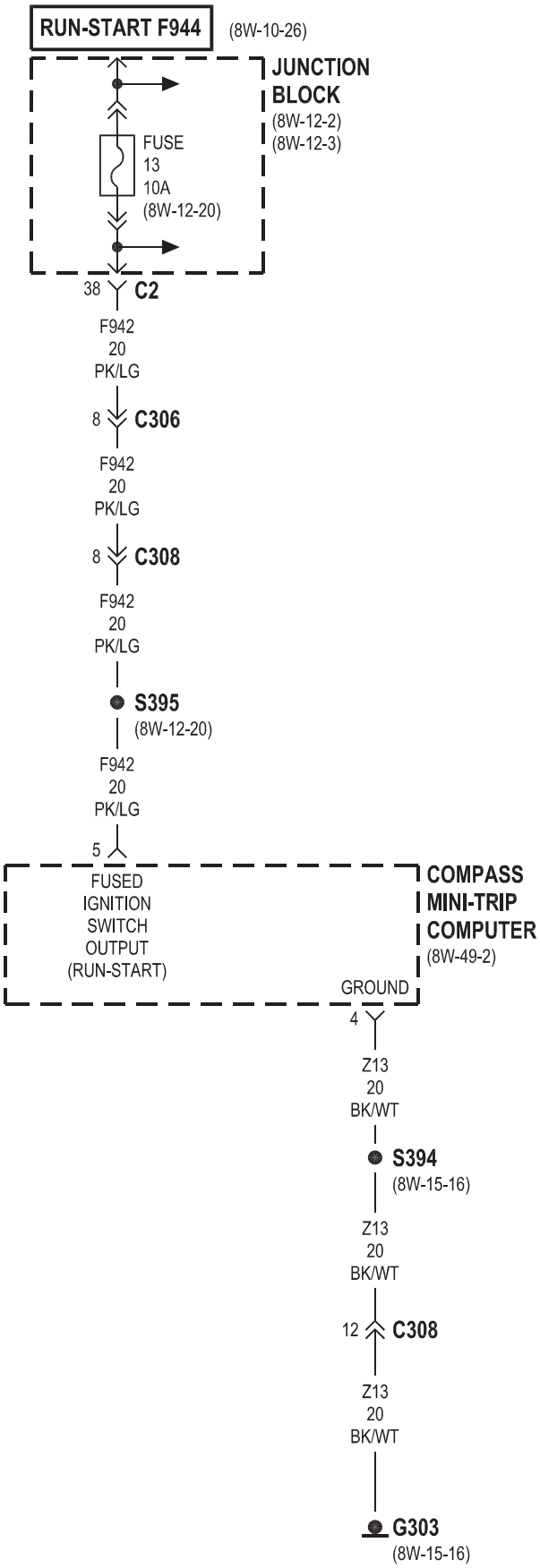
RUN-START F944
(8W-10-26)
JUNCTION BLOCK
(8W-12-2)
(8W-12-3)
FUSE
13
10A
(8W-12-20)
38
C2
F942
20
PK/LG
8
C306
F942
20
PK/LG
8
C308
F942
20
PK/LG
S395
(8W-12-20)
F942
20
PK/LG
5
FUSED IGNITION SWITCH OUTPUT (RUN-START)
COMPASS MINI-TRIP COMPUTER
(8W-49-2)
GROUND
4
Z13
20
BK/WT
S394
(8W-15-16)
Z13
20
BK/WT
12
C308
Z13
20
BK/WT
G303
(8W-15-16)

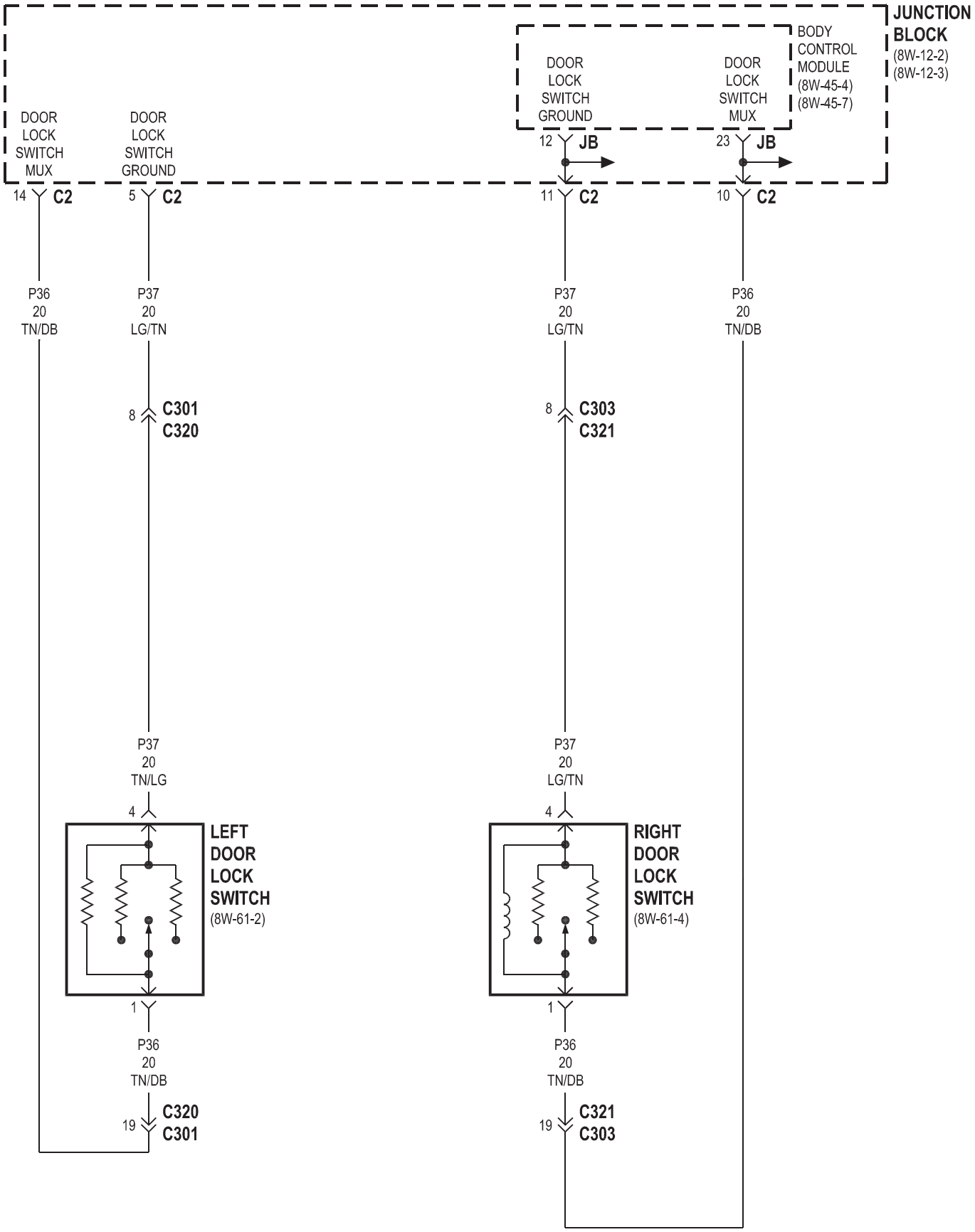
JUNCTION BLOCK
(8W-12-2)
(8W-12-3)
BODY CONTROL MODULE
(8W-45-4)
(8W-45-7)
DOOR LOCK SWITCH GROUND
DOOR LOCK SWITCH MUX
DOOR LOCK SWITCH MUX
DOOR LOCK SWITCH GROUND
12
JB
23
JB
14
C2
5
C2
11
C2
10
C2
P36
20
TN/DB
P37
20
LG/TN
P37
20
LG/TN
P36
20
TN/DB
8
C301
C320
8
C303
C321
P37
20
TN/LG
P37
20
LG/TN
4
4
LEFT DOOR LOCK SWITCH
(8W-61-2)
RIGHT DOOR LOCK SWITCH
(8W-61-4)
1
1
P36
20
TN/DB
P36
20
TN/DB
19
C320
C301
19
C321
C303

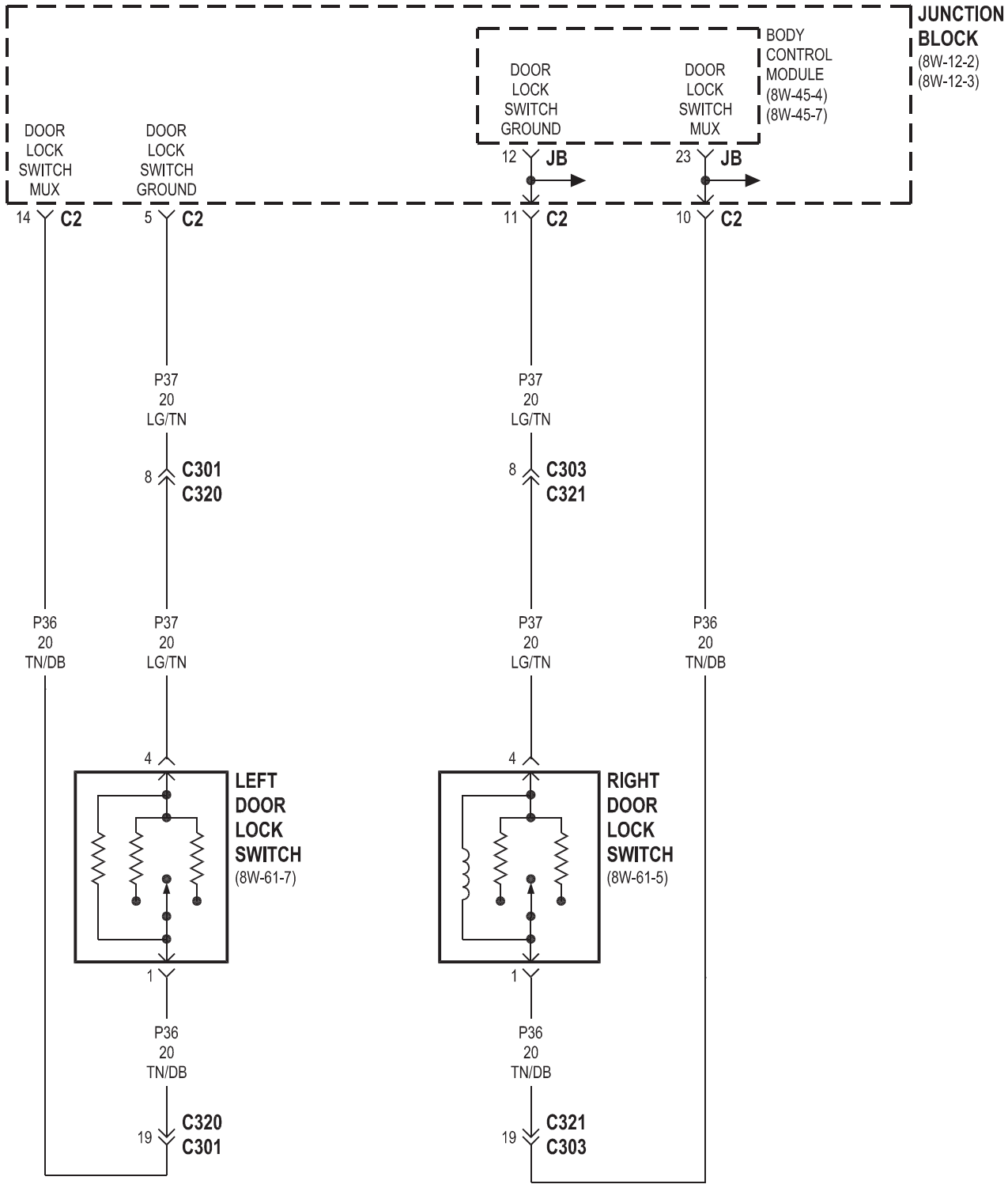
JUNCTION BLOCK
(8W-12-2)
(8W-12-3)
BODY CONTROL MODULE
(8W-45-4)
(8W-45-7)
DOOR LOCK SWITCH GROUND
DOOR LOCK SWITCH MUX
DOOR LOCK SWITCH MUX
DOOR LOCK SWITCH GROUND
12 JB
23 JB
14 C2
5 C2
11 C2
10 C2
P37 20 LG/TN
8 C301 C320
P37 20 LG/TN
8 C303 C321
P36 20 TN/DB
P37 20 LG/TN
P37 20 LG/TN
P36 20 TN/DB
4
LEFT DOOR LOCK SWITCH
(8W-61-7)
4
RIGHT DOOR LOCK SWITCH
(8W-61-5)
1
1
P36 20 TN/DB
P36 20 TN/DB
19 C320 C301
19 C321 C303

8W-40 INSTRUMENT CLUSTER

Component	Page
Airbag Control Module	8W-40-4, 7
Anti-Lock Brake Module	8W-40-8
Body Control Module	8W-40-3, 4, 5, 7
Data Link Connector	8W-40-4
Driver Seat Belt Switch	8W-40-7
Engine Coolant Level Sensor	8W-40-3
Front Control Module	8W-40-8
Fuse 9	8W-40-3
Fuse 13	8W-40-2
Fuse 34	8W-40-2
G103	8W-40-3
G111	8W-40-3
G202	8W-40-2, 3
Hazard Switch/Combination Flasher	8W-40-3
Instrument Cluster	8W-40-2, 3, 4, 5, 6, 7
Junction Block	8W-40-2, 3
Park Brake Switch	8W-40-5
Park Lamp Relay	8W-40-3
Powertrain Control Module	8W-40-8
Red Brake Warning Indicator Switch	8W-40-3
Washer Fluid Level Switch	8W-40-2

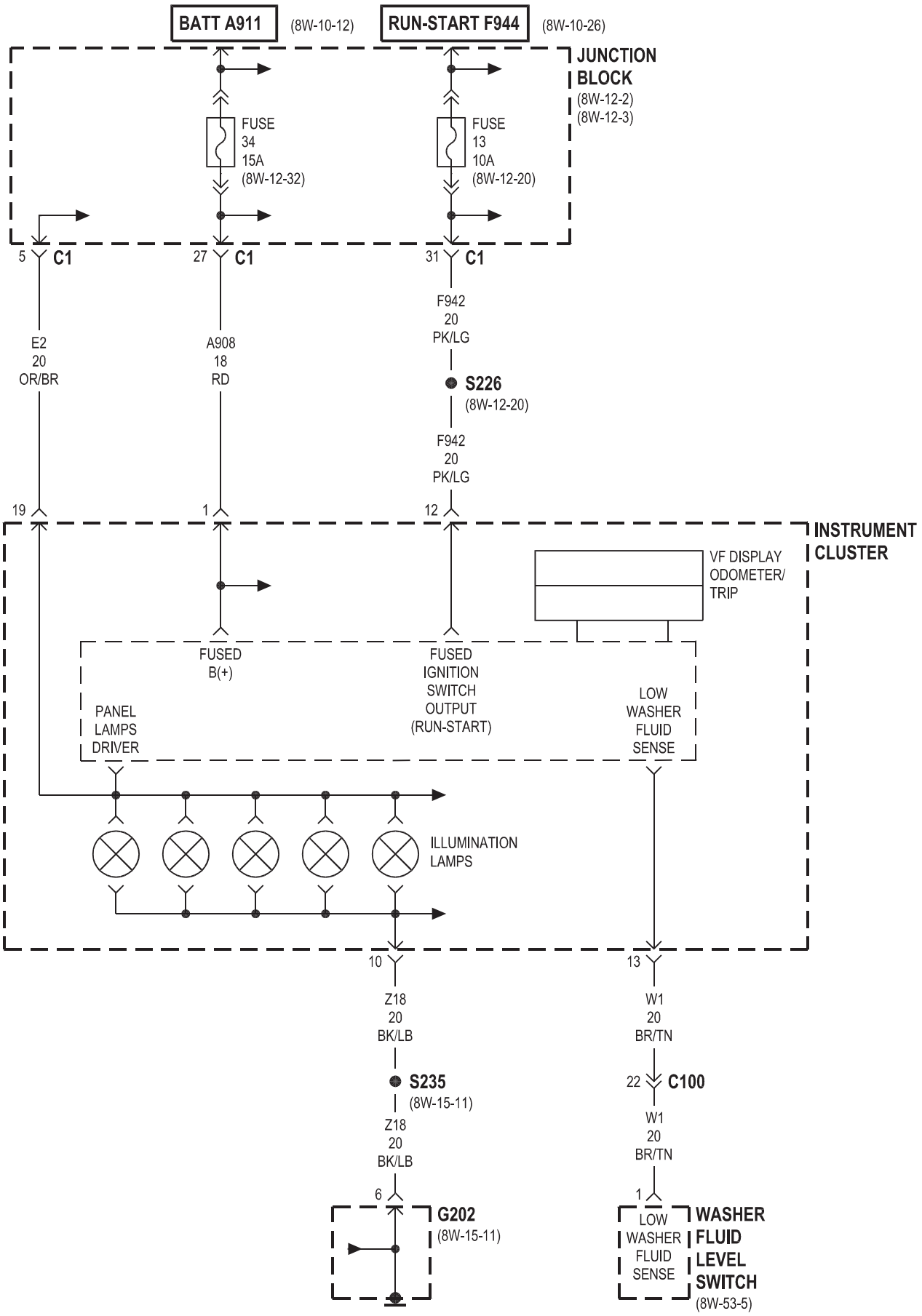
BATT A911
(8W-10-12)
RUN-START F944
(8W-10-26)
JUNCTION BLOCK
(8W-12-2)
(8W-12-3)
FUSE 34 15A (8W-12-32)
FUSE 13 10A (8W-12-20)
5 C1
27 C1
31 C1
E2 20 OR/BR
A908 18 RD
F942 20 PK/LG
S226
(8W-12-20)
F942 20 PK/LG
19
1
12
INSTRUMENT CLUSTER
VF DISPLAY ODOMETER/ TRIP
FUSED B(+)
FUSED IGNITION SWITCH OUTPUT (RUN-START)
PANEL LAMPS DRIVER
LOW WASHER FLUID SENSE
ILLUMINATION LAMPS
10
13
Z18 20 BK/LB
S235
(8W-15-11)
Z18 20 BK/LB
6
G202
(8W-15-11)
W1 20 BR/TN
22 C100
W1 20 BR/TN
1
LOW WASHER FLUID SENSE
WASHER FLUID LEVEL SWITCH
(8W-53-5)

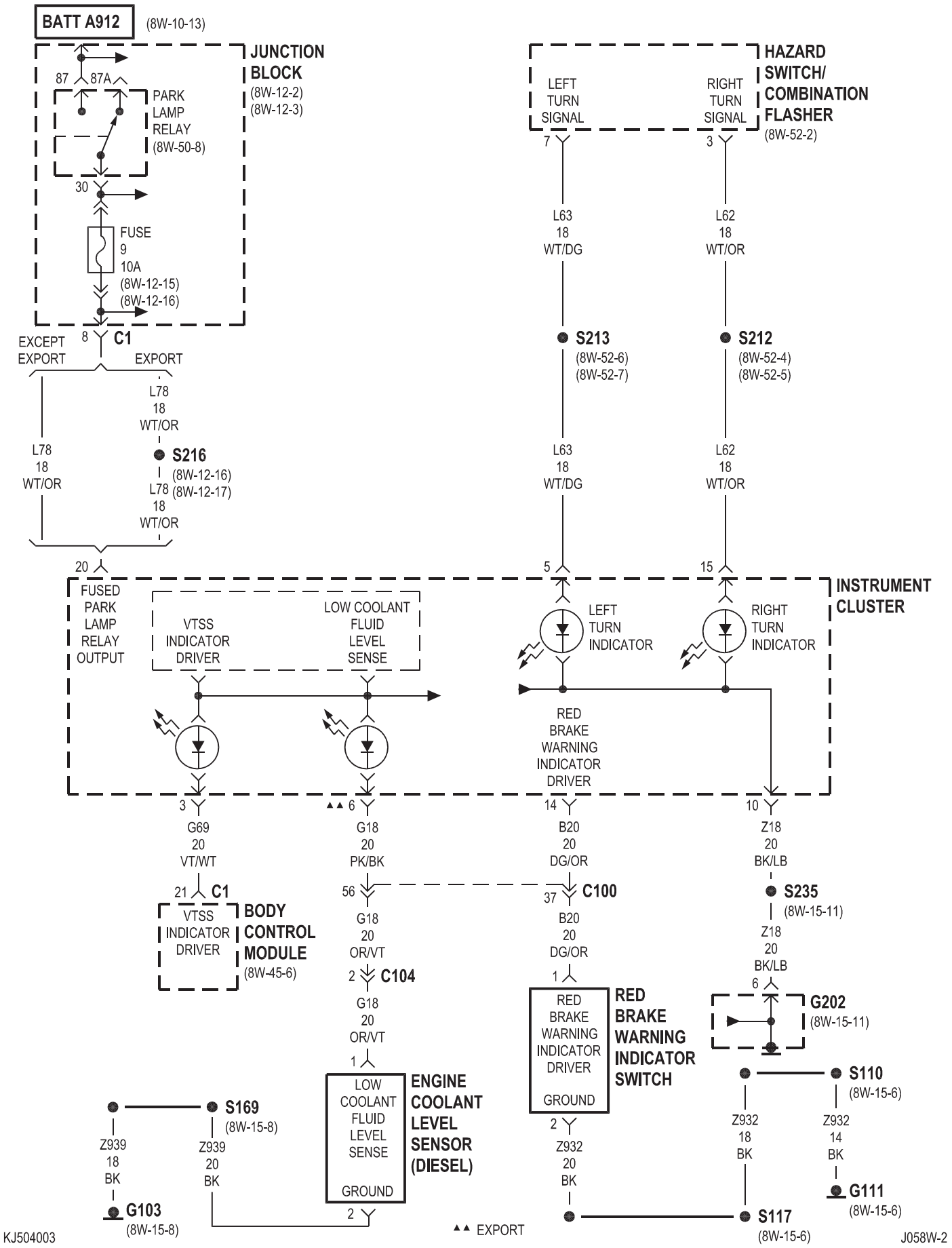
BATT A912
(8W-10-13)
JUNCTION BLOCK
(8W-12-2)
(8W-12-3)
87
87A
PARK LAMP RELAY
(8W-50-8)
30
FUSE 9 10A
(8W-12-15)
(8W-12-16)
8
C1
EXCEPT EXPORT
EXPORT
L78 18 WT/OR
S216
(8W-12-16)
(8W-12-17)
L78 18 WT/OR
L78 18 WT/OR
20
HAZARD SWITCH/ COMBINATION FLASHER
(8W-52-2)
LEFT TURN SIGNAL
RIGHT TURN SIGNAL
7
3
L63 18 WT/DG
L62 18 WT/OR
S213
(8W-52-6)
(8W-52-7)
S212
(8W-52-4)
(8W-52-5)
L63 18 WT/DG
L62 18 WT/OR
5
15
INSTRUMENT CLUSTER
FUSED PARK LAMP RELAY OUTPUT
VTSS INDICATOR DRIVER
LOW COOLANT FLUID LEVEL SENSE
LEFT TURN INDICATOR
RIGHT TURN INDICATOR
RED BRAKE WARNING INDICATOR DRIVER
3
▲▲ 6
14
10
G69 20 VT/WT
G18 20 PK/BK
B20 20 DG/OR
Z18 20 BK/LB
21
C1
VTSS INDICATOR DRIVER
BODY CONTROL MODULE
(8W-45-6)
56
G18 20 OR/VT
37
C100
B20 20 DG/OR
S235
(8W-15-11)
Z18 20 BK/LB
2
C104
G18 20 OR/VT
1
RED BRAKE WARNING INDICATOR DRIVER
GROUND
RED BRAKE WARNING INDICATOR SWITCH
6
G202
(8W-15-11)
LOW COOLANT FLUID LEVEL SENSE
GROUND
ENGINE COOLANT LEVEL SENSOR (DIESEL)
S110
(8W-15-6)
S169
(8W-15-8)
Z939 18 BK
Z939 20 BK
Z932 20 BK
Z932 18 BK
Z932 14 BK
G111
(8W-15-6)
G103
(8W-15-8)
S117
(8W-15-6)
▲▲ EXPORT
KJ504003
J058W-2

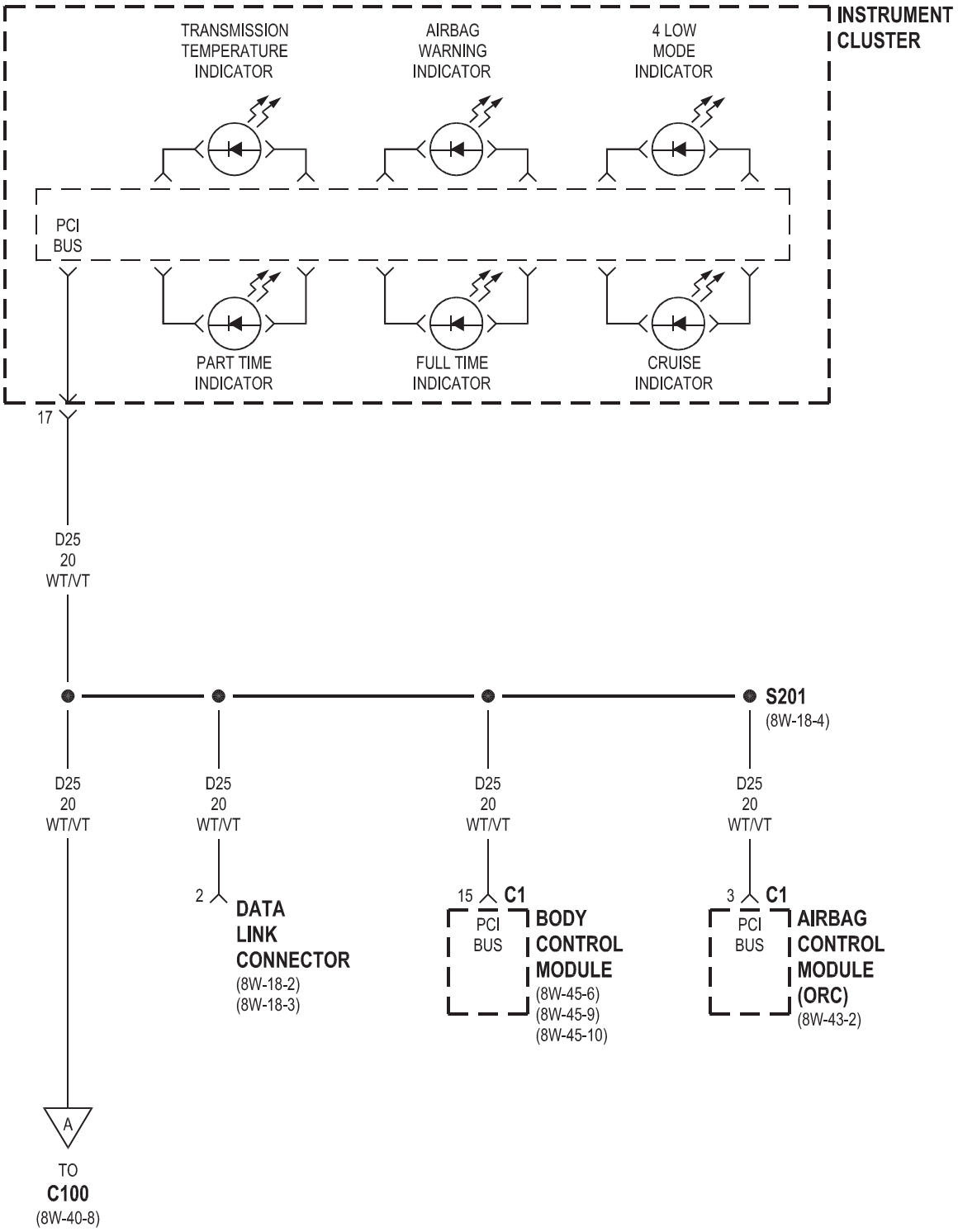
INSTRUMENT CLUSTER
TRANSMISSION TEMPERATURE INDICATOR
AIRBAG WARNING INDICATOR
4 LOW MODE INDICATOR
PCI BUS
PART TIME INDICATOR
FULL TIME INDICATOR
CRUISE INDICATOR
17
D25 20 WT/VT
S201
(8W-18-4)
D25 20 WT/VT
D25 20 WT/VT
D25 20 WT/VT
D25 20 WT/VT
2
DATA LINK CONNECTOR
(8W-18-2)
(8W-18-3)
15
C1
PCI BUS
BODY CONTROL MODULE
(8W-45-6)
(8W-45-9)
(8W-45-10)
3
C1
PCI BUS
AIRBAG CONTROL MODULE (ORC)
(8W-43-2)
A
TO
C100
(8W-40-8)

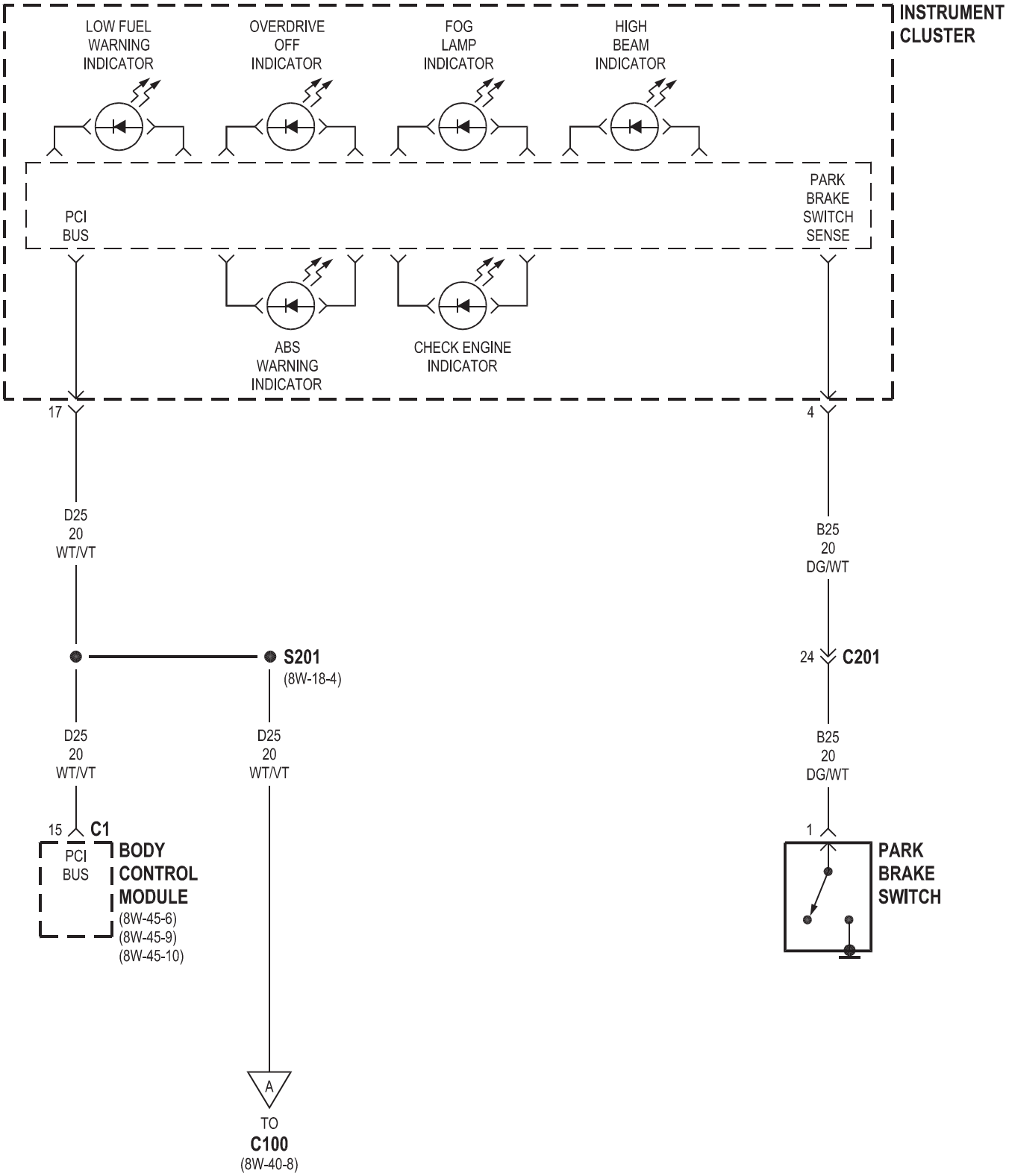
INSTRUMENT CLUSTER
LOW FUEL WARNING INDICATOR
OVERDRIVE OFF INDICATOR
FOG LAMP INDICATOR
HIGH BEAM INDICATOR
PCI BUS
PARK BRAKE SWITCH SENSE
ABS WARNING INDICATOR
CHECK ENGINE INDICATOR
17
4
D25 20 WT/VT
B25 20 DG/WT
S201
(8W-18-4)
24
C201
D25 20 WT/VT
D25 20 WT/VT
B25 20 DG/WT
15
C1
PCI BUS
BODY CONTROL MODULE
(8W-45-6)
(8W-45-9)
(8W-45-10)
1
PARK BRAKE SWITCH
A
TO
C100
(8W-40-8)

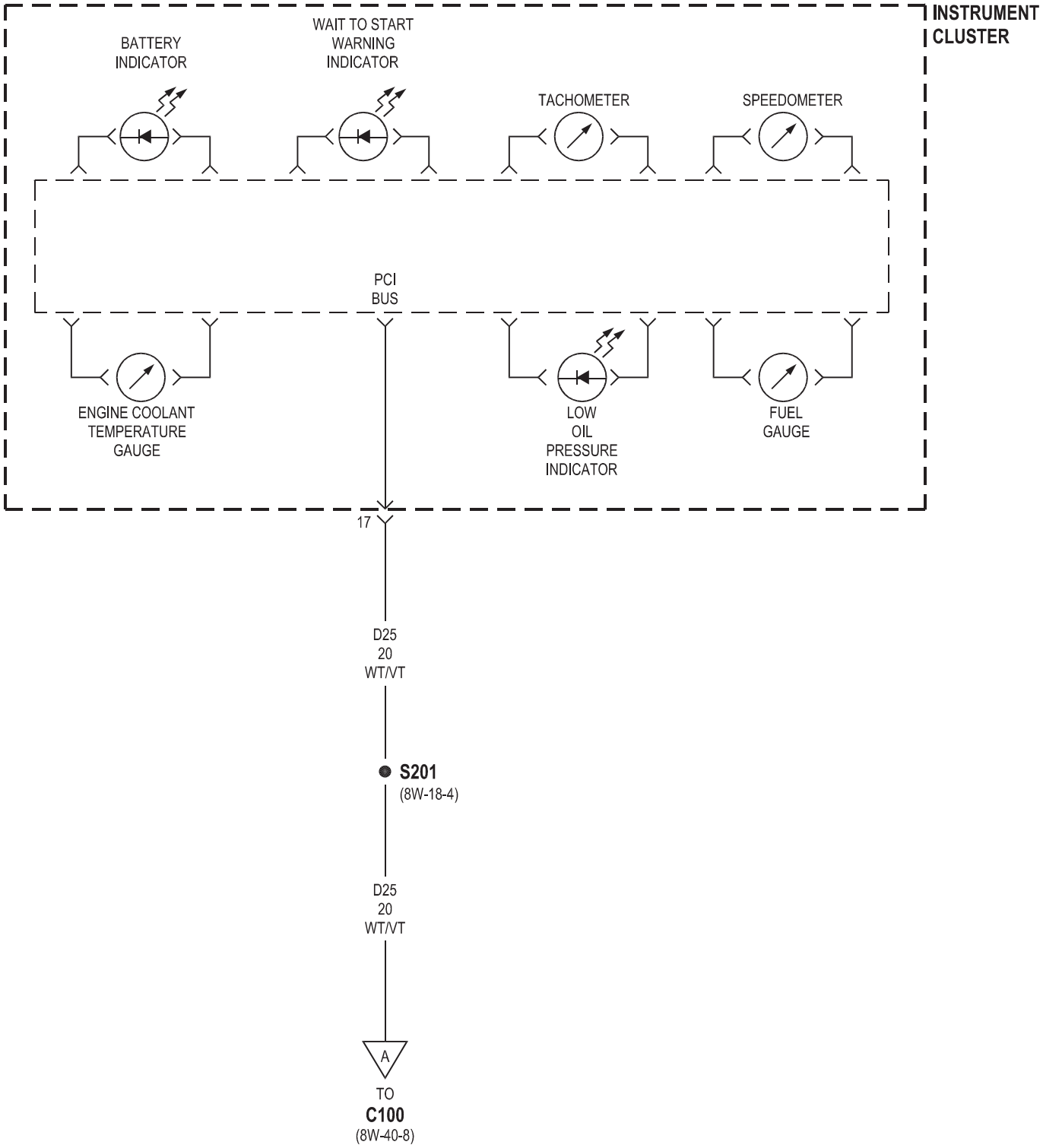
INSTRUMENT CLUSTER
BATTERY INDICATOR
WAIT TO START WARNING INDICATOR
TACHOMETER
SPEEDOMETER
PCI BUS
ENGINE COOLANT TEMPERATURE GAUGE
LOW OIL PRESSURE INDICATOR
FUEL GAUGE
17
D25
20
WT/VT
S201
(8W-18-4)
D25
20
WT/VT
A
TO
C100
(8W-40-8)

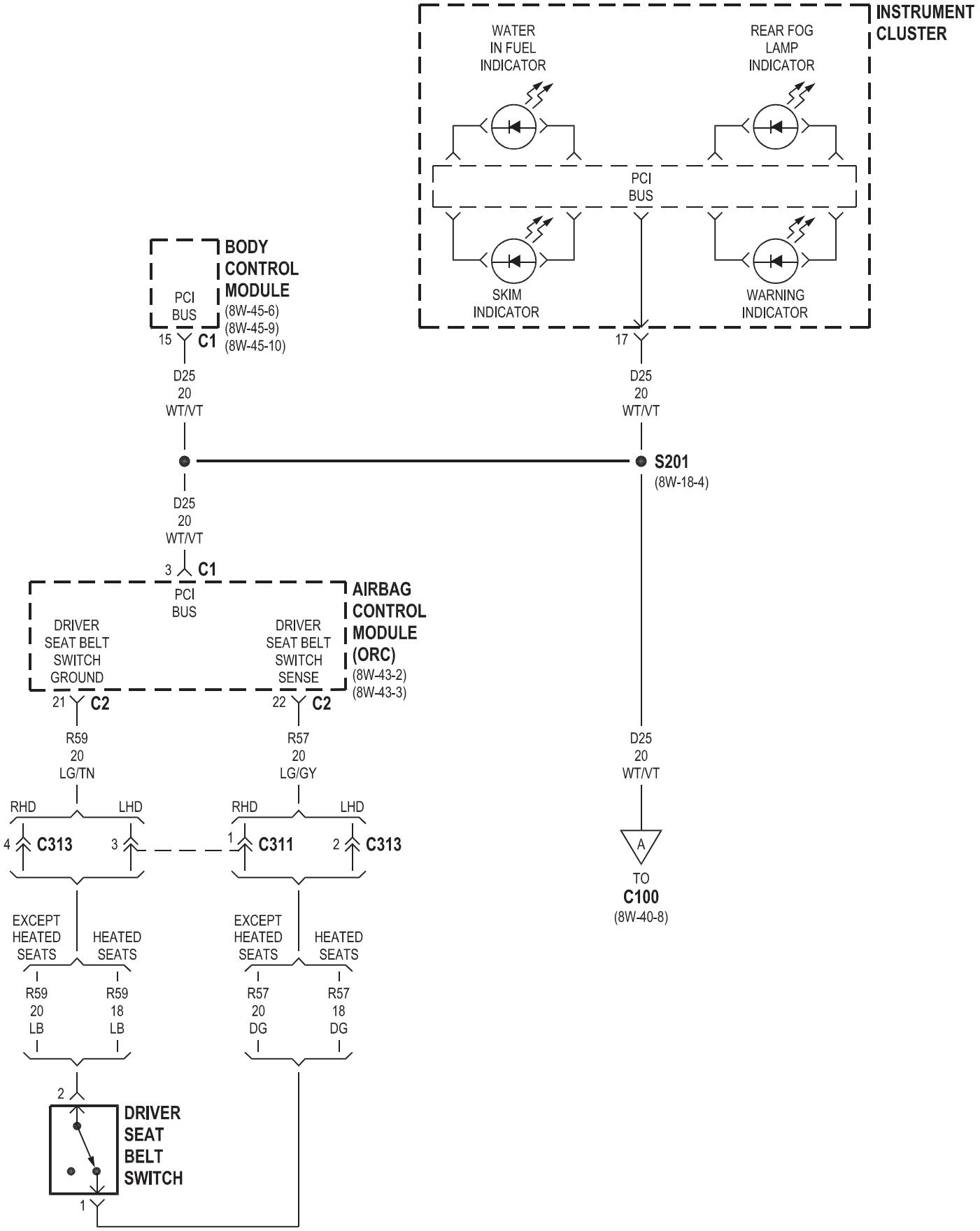
INSTRUMENT CLUSTER
WATER IN FUEL INDICATOR
REAR FOG LAMP INDICATOR
PCI BUS
SKIM INDICATOR
WARNING INDICATOR
17
D25 20 WT/VT
BODY CONTROL MODULE
(8W-45-6)
(8W-45-9)
(8W-45-10)
PCI BUS
15
C1
D25 20 WT/VT
S201
(8W-18-4)
D25 20 WT/VT
3
C1
PCI BUS
AIRBAG CONTROL MODULE (ORC)
(8W-43-2)
(8W-43-3)
DRIVER SEAT BELT SWITCH GROUND
DRIVER SEAT BELT SWITCH SENSE
21
C2
22
C2
R59 20 LG/TN
R57 20 LG/GY
D25 20 WT/VT
RHD
LHD
RHD
LHD
4
C313
3
1
C311
2
C313
A
TO
C100
(8W-40-8)
EXCEPT HEATED SEATS
HEATED SEATS
EXCEPT HEATED SEATS
HEATED SEATS
R59 20 LB
R59 18 LB
R57 20 DG
R57 18 DG
2
DRIVER SEAT BELT SWITCH
1

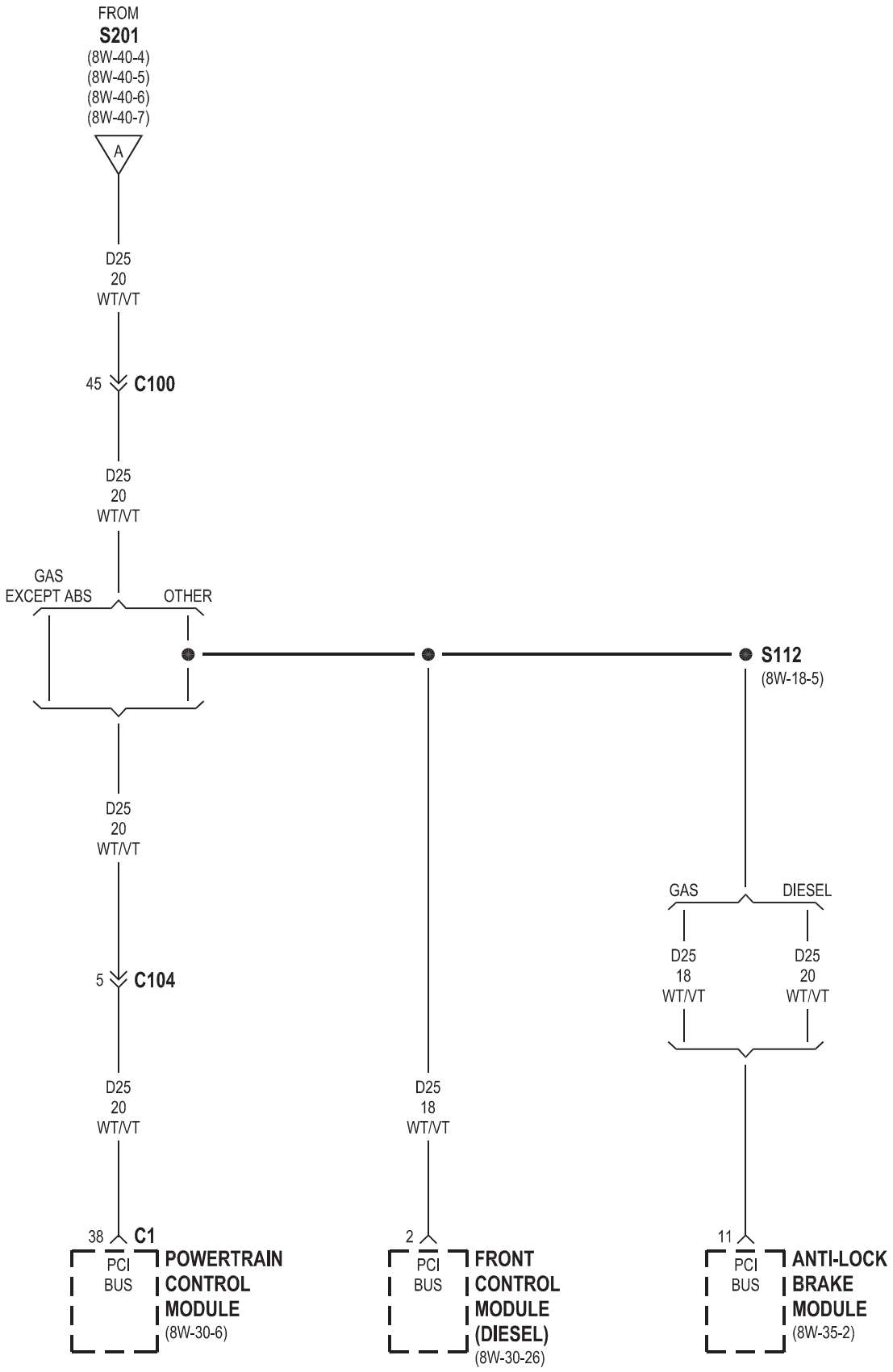
FROM
S201
(8W-40-4)
(8W-40-5)
(8W-40-6)
(8W-40-7)
A
D25
20
WT/VT
45
C100
D25
20
WT/VT
GAS
EXCEPT ABS
OTHER
S112
(8W-18-5)
D25
20
WT/VT
5
C104
D25
20
WT/VT
38
C1
PCI
BUS
POWERTRAIN
CONTROL
MODULE
(8W-30-6)
D25
18
WT/VT
2
PCI
BUS
FRONT
CONTROL
MODULE
(DIESEL)
(8W-30-26)
GAS
DIESEL
D25
18
WT/VT
D25
20
WT/VT
11
PCI
BUS
ANTI-LOCK
BRAKE
MODULE
(8W-35-2)

8W-41 HORN/CIGAR LIGHTER/POWER OUTLET

Component	Page
Body Control Module	8W-41-2
Cigar Lighter	8W-41-3
Clockspring	8W-41-2
Fuse 1	8W-41-2
Fuse 16	8W-41-3
Fuse 31	8W-41-3
G111	8W-41-2
G202	8W-41-3
G304	8W-41-3
High Note Horn	8W-41-2
Horn Relay	8W-41-2
Horn Switch	8W-41-2
Junction Block	8W-41-2, 3
Rear Power Outlet	8W-41-3

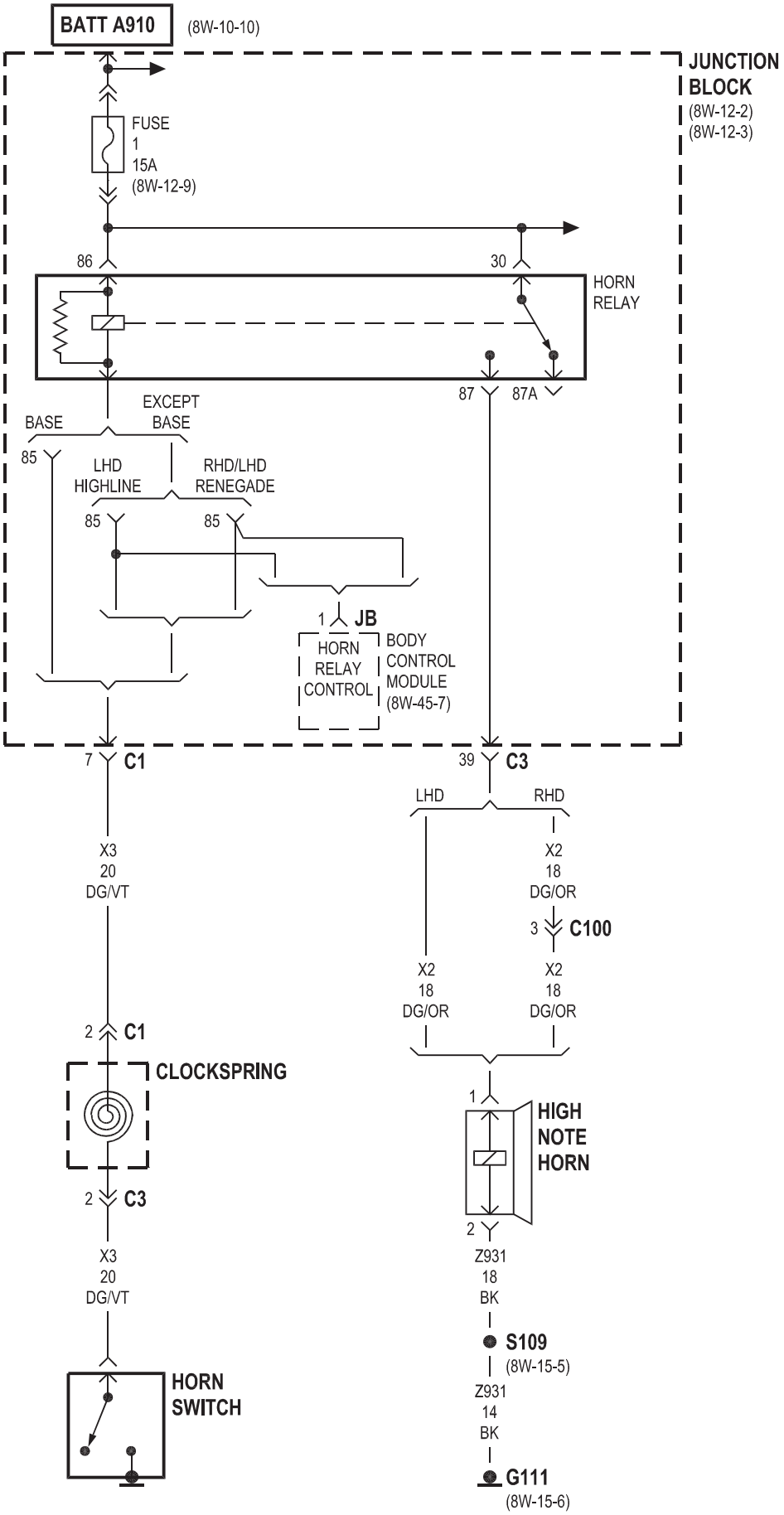
BATT A910
(8W-10-10)
JUNCTION BLOCK
(8W-12-2)
(8W-12-3)
FUSE
1
15A
(8W-12-9)
86
30
HORN RELAY
87
87A
BASE
EXCEPT BASE
85
LHD HIGHLINE
RHD/LHD RENEGADE
85
85
1
JB
HORN RELAY CONTROL
BODY CONTROL MODULE
(8W-45-7)
7
C1
39
C3
LHD
RHD
X3
20
DG/VT
X2
18
DG/OR
3
C100
X2
18
DG/OR
X2
18
DG/OR
2
C1
CLOCKSPRING
1
HIGH NOTE HORN
2
C3
2
X3
20
DG/VT
Z931
18
BK
S109
(8W-15-5)
Z931
14
BK
HORN SWITCH
G111
(8W-15-6)

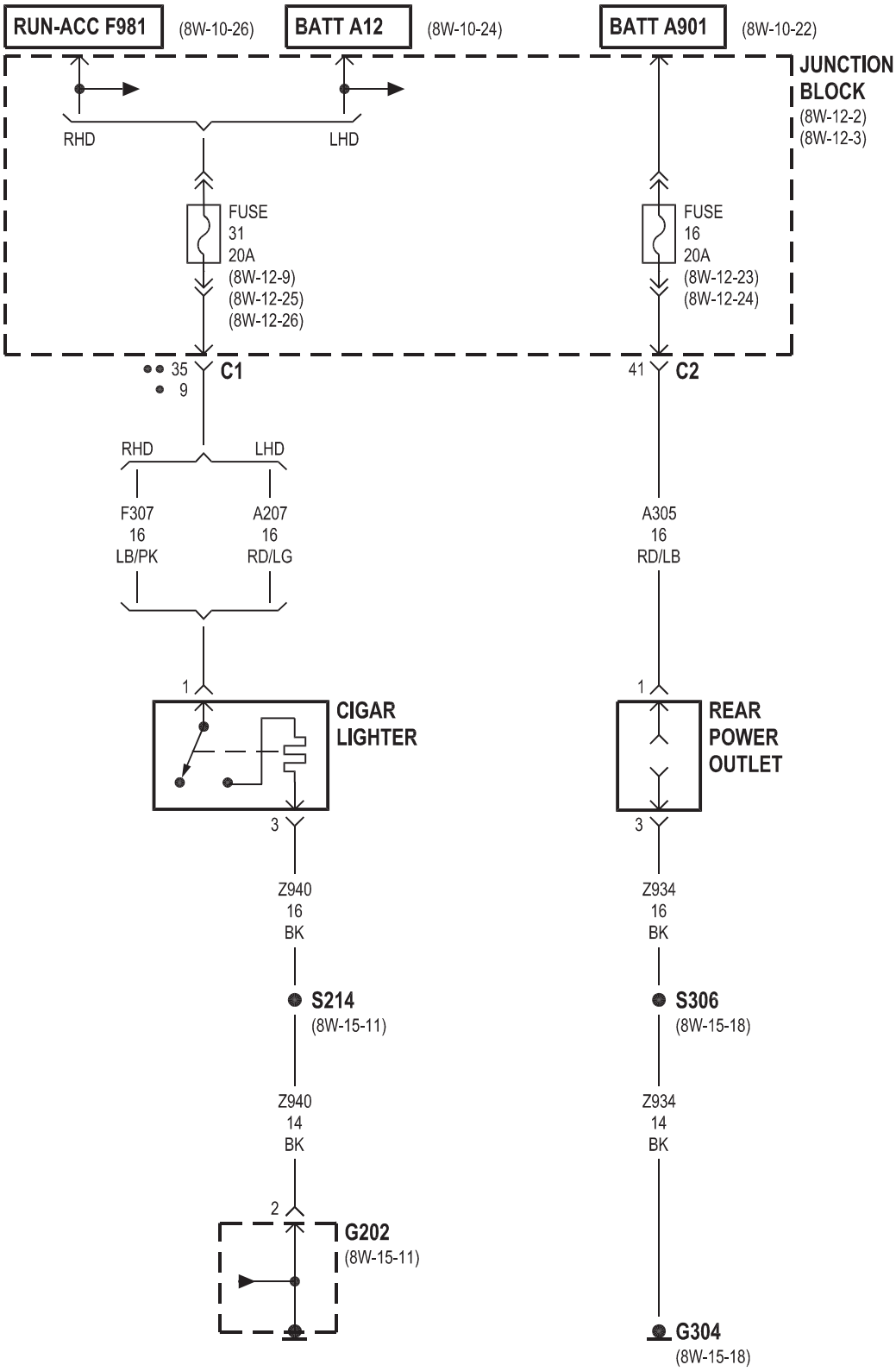
RUN-ACC F981
(8W-10-26)
BATT A12
(8W-10-24)
BATT A901
(8W-10-22)
JUNCTION BLOCK
(8W-12-2)
(8W-12-3)
RHD
LHD
FUSE
31
20A
(8W-12-9)
(8W-12-25)
(8W-12-26)
FUSE
16
20A
(8W-12-23)
(8W-12-24)
35
9
C1
41
C2
RHD
LHD
F307
16
LB/PK
A207
16
RD/LG
A305
16
RD/LB
1
CIGAR LIGHTER
3
1
REAR POWER OUTLET
3
Z940
16
BK
Z934
16
BK
S214
(8W-15-11)
S306
(8W-15-18)
Z940
14
BK
Z934
14
BK
2
G202
(8W-15-11)
G304
(8W-15-18)

• LHD
•• RHD

8W-42 AIR CONDITIONING-HEATER

Component	Page
A/C Compressor Clutch	8W-42-5, 7
A/C Compressor Clutch Relay	8W-42-5, 7
A/C Low Pressure Switch	8W-42-3, 6
A/C Pressure Transducer	8W-42-5, 7
A/C-Heater Control	8W-42-2, 4
Auto Shut Down Relay	8W-42-6, 7
Blend Door Actuator	8W-42-2
Blower Motor	8W-42-3, 4, 6
Blower Motor Relay	8W-42-3, 6
Blower Motor Resistor Block	8W-42-4
Body Control Module	8W-42-4
Cabin Heater	8W-42-7
Cabin Heater Relay	8W-42-7
Defogger Relay	8W-42-2
Engine Control Module	8W-42-6, 7
Front Control Module	8W-42-7
Fuel Heater Relay	8W-42-6
Fuel Pump Relay	8W-42-5
Fuse 1	8W-42-3, 6
Fuse 6	8W-42-6
Fuse 14	8W-42-5
Fuse 16	8W-42-6, 7
Fuse 21	8W-42-5, 7
Fuse 24	8W-42-3, 6
Fuse 25	8W-42-2
Fuse 30	8W-42-2
G103	8W-42-5, 7
G111	8W-42-3, 6
G112	8W-42-3, 6
G200	8W-42-4
G202	8W-42-2
Instrument Cluster	8W-42-4
Junction Block	8W-42-2, 3, 4, 5, 6
Power Distribution Center	8W-42-3, 5, 6, 7
Powertrain Control Module	8W-42-3, 5

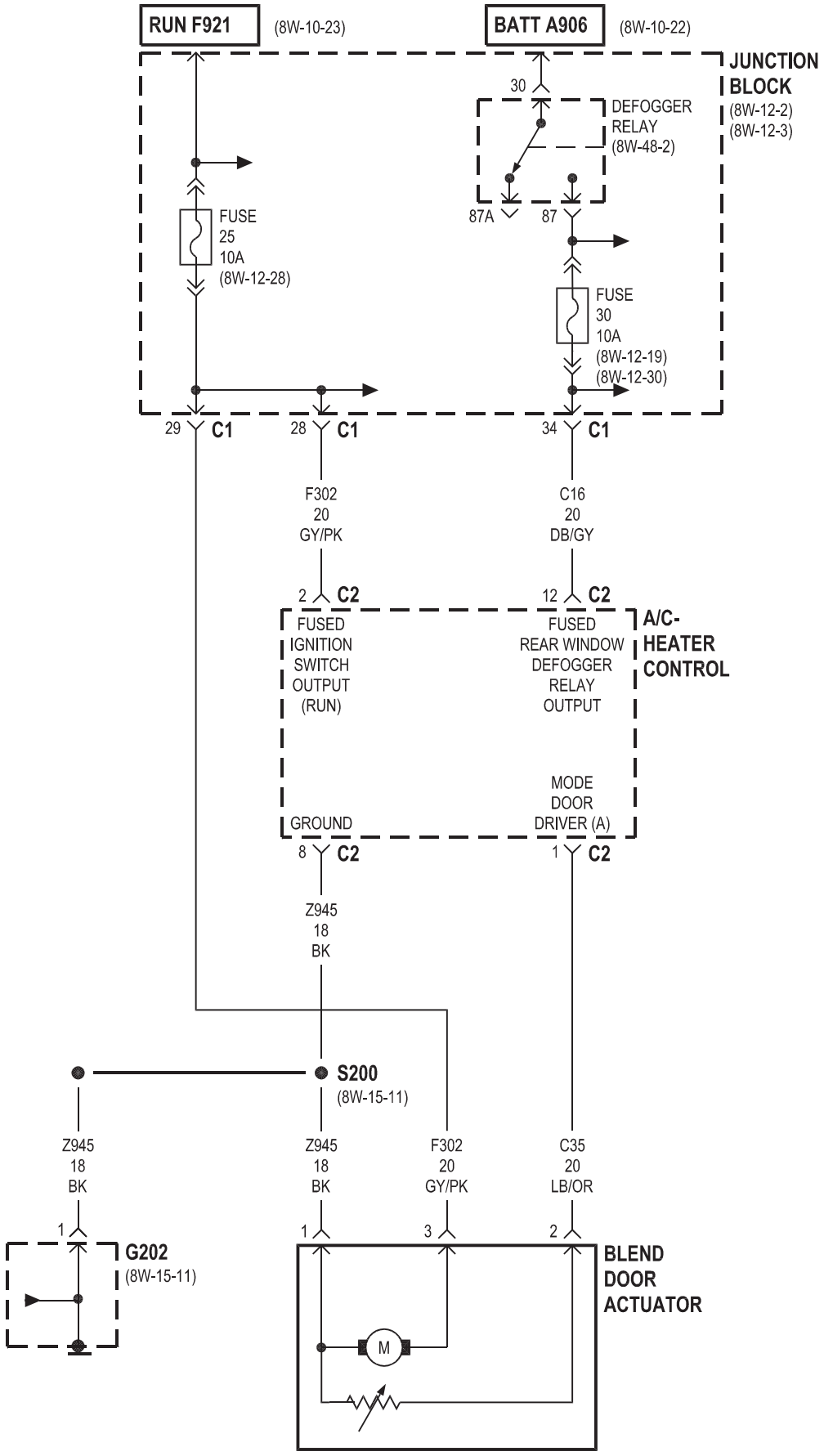
RUN F921
(8W-10-23)
BATT A906
(8W-10-22)
JUNCTION BLOCK
(8W-12-2)
(8W-12-3)
30
DEFOGGER RELAY
(8W-48-2)
87A
87
FUSE
25
10A
(8W-12-28)
FUSE
30
10A
(8W-12-19)
(8W-12-30)
29 C1
28 C1
34 C1
F302
20
GY/PK
C16
20
DB/GY
2 C2
12 C2
FUSED IGNITION SWITCH OUTPUT (RUN)
FUSED REAR WINDOW DEFOGGER RELAY OUTPUT
A/C-HEATER CONTROL
GROUND
MODE DOOR DRIVER (A)
8 C2
1 C2
Z945
18
BK
S200
(8W-15-11)
Z945
18
BK
Z945
18
BK
F302
20
GY/PK
C35
20
LB/OR
1
1
3
2
G202
(8W-15-11)
BLEND DOOR ACTUATOR
M

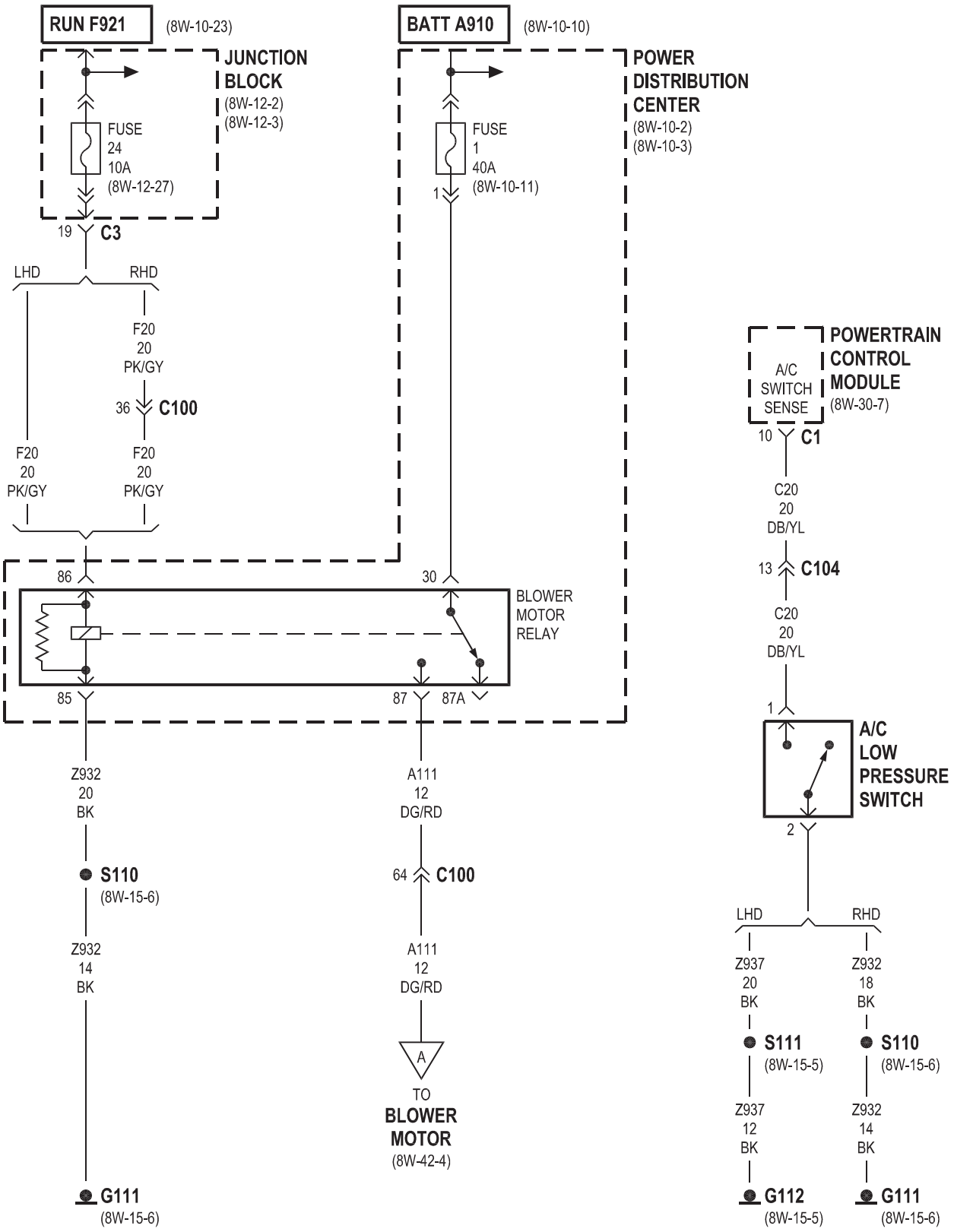
RUN F921
(8W-10-23)
BATT A910
(8W-10-10)
JUNCTION BLOCK
(8W-12-2)
(8W-12-3)
POWER DISTRIBUTION CENTER
(8W-10-2)
(8W-10-3)
FUSE 24 10A (8W-12-27)
FUSE 1 40A (8W-10-11)
19
C3
1
LHD
RHD
F20 20 PK/GY
36
C100
F20 20 PK/GY
F20 20 PK/GY
86
30
BLOWER MOTOR RELAY
85
87
87A
Z932 20 BK
A111 12 DG/RD
S110
(8W-15-6)
64
C100
Z932 14 BK
A111 12 DG/RD
A
TO BLOWER MOTOR
(8W-42-4)
G111
(8W-15-6)
POWERTRAIN CONTROL MODULE
(8W-30-7)
A/C SWITCH SENSE
10
C1
C20 20 DB/YL
13
C104
C20 20 DB/YL
1
A/C LOW PRESSURE SWITCH
2
LHD
RHD
Z937 20 BK
Z932 18 BK
S111
(8W-15-5)
S110
(8W-15-6)
Z937 12 BK
Z932 14 BK
G112
(8W-15-5)
G111
(8W-15-6)

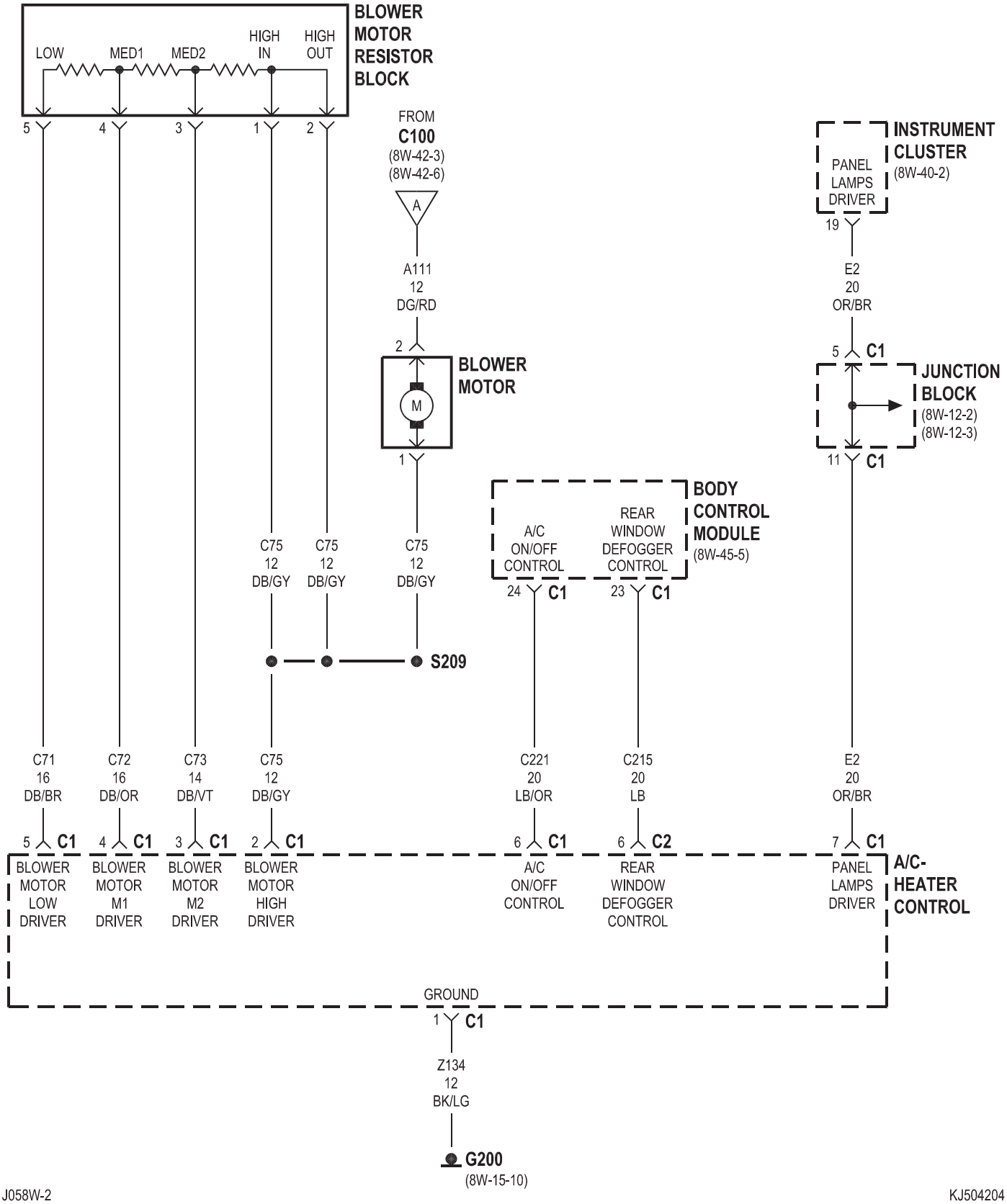
BLOWER MOTOR RESISTOR BLOCK
LOW
MED1
MED2
HIGH IN
HIGH OUT
5
4
3
1
2
FROM C100 (8W-42-3) (8W-42-6)
A
A111 12 DG/RD
2
BLOWER MOTOR
M
1
INSTRUMENT CLUSTER (8W-40-2)
PANEL LAMPS DRIVER
19
E2 20 OR/BR
5 C1
JUNCTION BLOCK (8W-12-2) (8W-12-3)
11 C1
BODY CONTROL MODULE (8W-45-5)
A/C ON/OFF CONTROL
REAR WINDOW DEFOGGER CONTROL
24 C1
23 C1
C75 12 DB/GY
C75 12 DB/GY
C75 12 DB/GY
S209
C71 16 DB/BR
C72 16 DB/OR
C73 14 DB/VT
C75 12 DB/GY
C221 20 LB/OR
C215 20 LB
E2 20 OR/BR
5 C1
4 C1
3 C1
2 C1
6 C1
6 C2
7 C1
BLOWER MOTOR LOW DRIVER
BLOWER MOTOR M1 DRIVER
BLOWER MOTOR M2 DRIVER
BLOWER MOTOR HIGH DRIVER
A/C ON/OFF CONTROL
REAR WINDOW DEFOGGER CONTROL
PANEL LAMPS DRIVER
A/C-HEATER CONTROL
GROUND
1 C1
Z134 12 BK/LG
G200 (8W-15-10)

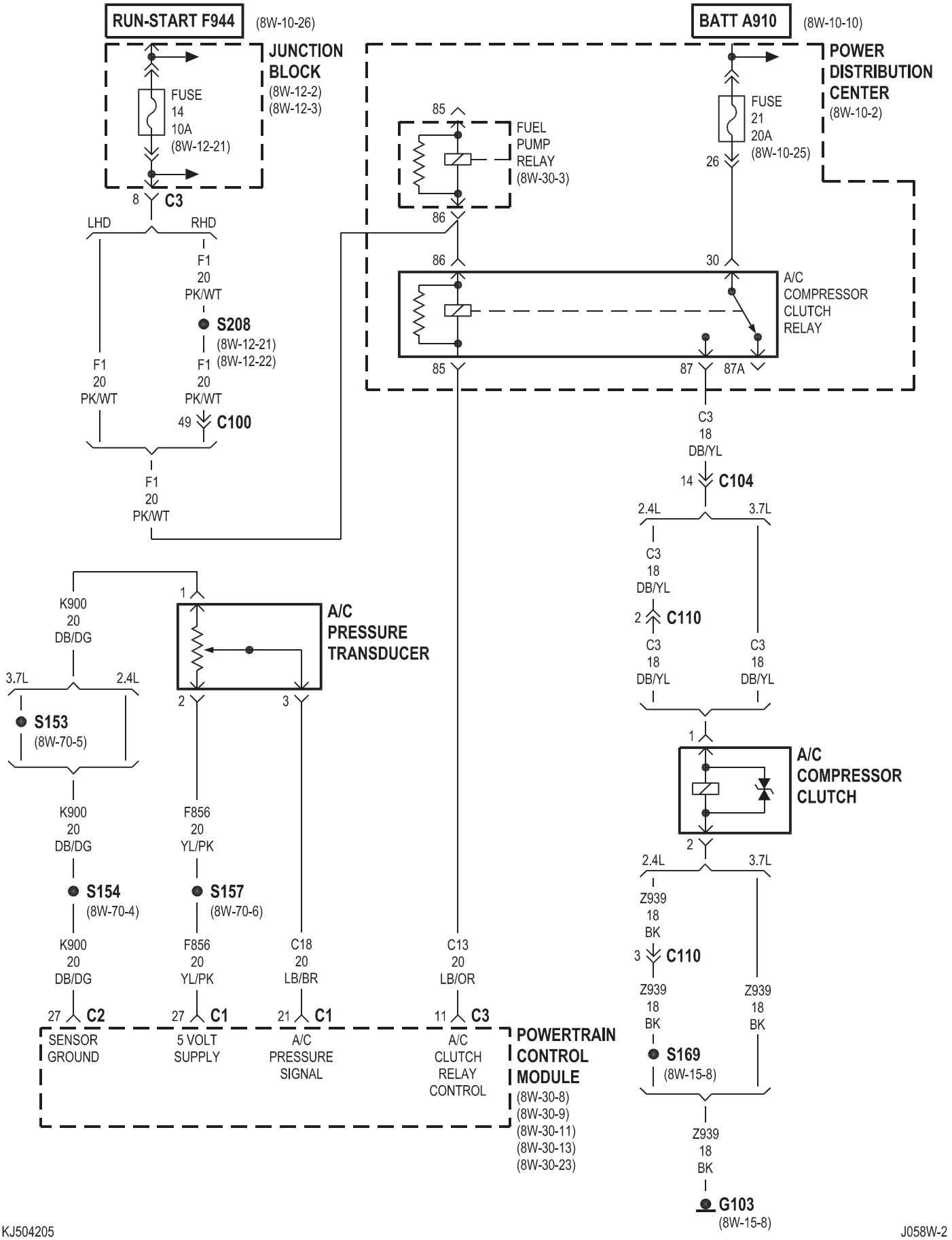
RUN-START F944
(8W-10-26)
JUNCTION BLOCK
(8W-12-2)
(8W-12-3)
FUSE 14 10A
(8W-12-21)
8
C3
LHD
RHD
F1 20 PK/WT
S208
(8W-12-21)
(8W-12-22)
F1 20 PK/WT
49
C100
F1 20 PK/WT
BATT A910
(8W-10-10)
POWER DISTRIBUTION CENTER
(8W-10-2)
FUSE 21 20A
(8W-10-25)
26
85
FUEL PUMP RELAY
(8W-30-3)
86
86
30
A/C COMPRESSOR CLUTCH RELAY
85
87
87A
C3 18 DB/YL
14
C104
2.4L
3.7L
C3 18 DB/YL
2
C110
C3 18 DB/YL
C3 18 DB/YL
K900 20 DB/DG
1
A/C PRESSURE TRANSDUCER
3.7L
2.4L
2
3
S153
(8W-70-5)
K900 20 DB/DG
F856 20 YL/PK
S154
(8W-70-4)
S157
(8W-70-6)
K900 20 DB/DG
F856 20 YL/PK
C18 20 LB/BR
C13 20 LB/OR
27
C2
27
C1
21
C1
11
C3
SENSOR GROUND
5 VOLT SUPPLY
A/C PRESSURE SIGNAL
A/C CLUTCH RELAY CONTROL
POWERTRAIN CONTROL MODULE
(8W-30-8)
(8W-30-9)
(8W-30-11)
(8W-30-13)
(8W-30-23)
1
A/C COMPRESSOR CLUTCH
2
2.4L
3.7L
Z939 18 BK
3
C110
Z939 18 BK
Z939 18 BK
S169
(8W-15-8)
Z939 18 BK
G103
(8W-15-8)

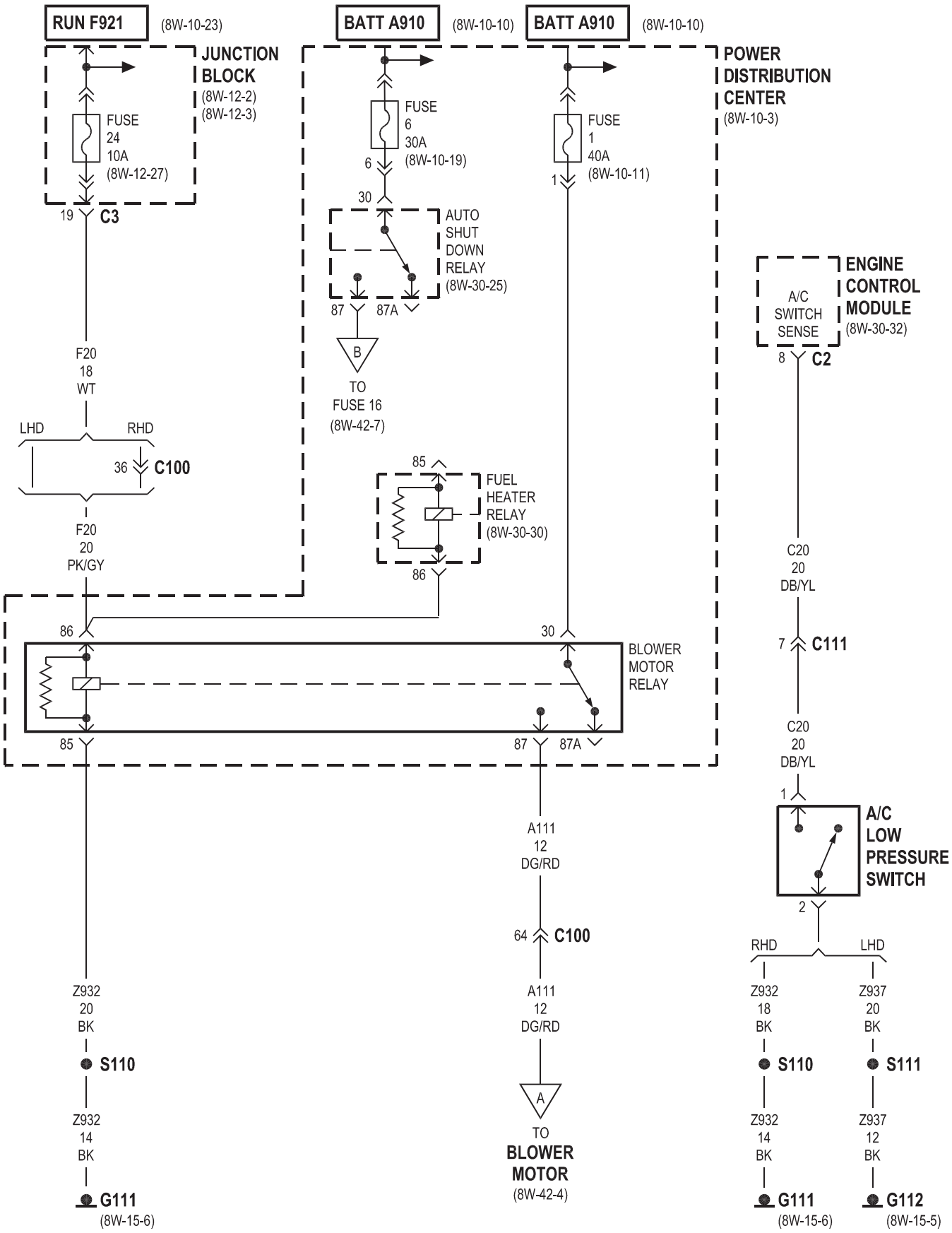
RUN F921
(8W-10-23)
BATT A910
(8W-10-10)
BATT A910
(8W-10-10)
JUNCTION BLOCK
(8W-12-2)
(8W-12-3)
FUSE 24 10A
(8W-12-27)
19
C3
POWER DISTRIBUTION CENTER
(8W-10-3)
FUSE 6 30A
(8W-10-19)
6
30
FUSE 1 40A
(8W-10-11)
1
AUTO SHUT DOWN RELAY
(8W-30-25)
87
87A
B
TO FUSE 16
(8W-42-7)
ENGINE CONTROL MODULE
(8W-30-32)
A/C SWITCH SENSE
8
C2
F20
18
WT
LHD
RHD
36
C100
F20
20
PK/GY
85
FUEL HEATER RELAY
(8W-30-30)
86
C20
20
DB/YL
7
C111
86
30
BLOWER MOTOR RELAY
85
87
87A
C20
20
DB/YL
1
A/C LOW PRESSURE SWITCH
2
A111
12
DG/RD
64
C100
A111
12
DG/RD
A
TO BLOWER MOTOR
(8W-42-4)
RHD
LHD
Z932
20
BK
S110
Z932
14
BK
G111
(8W-15-6)
Z932
18
BK
S110
Z932
14
BK
G111
(8W-15-6)
Z937
20
BK
S111
Z937
12
BK
G112
(8W-15-5)

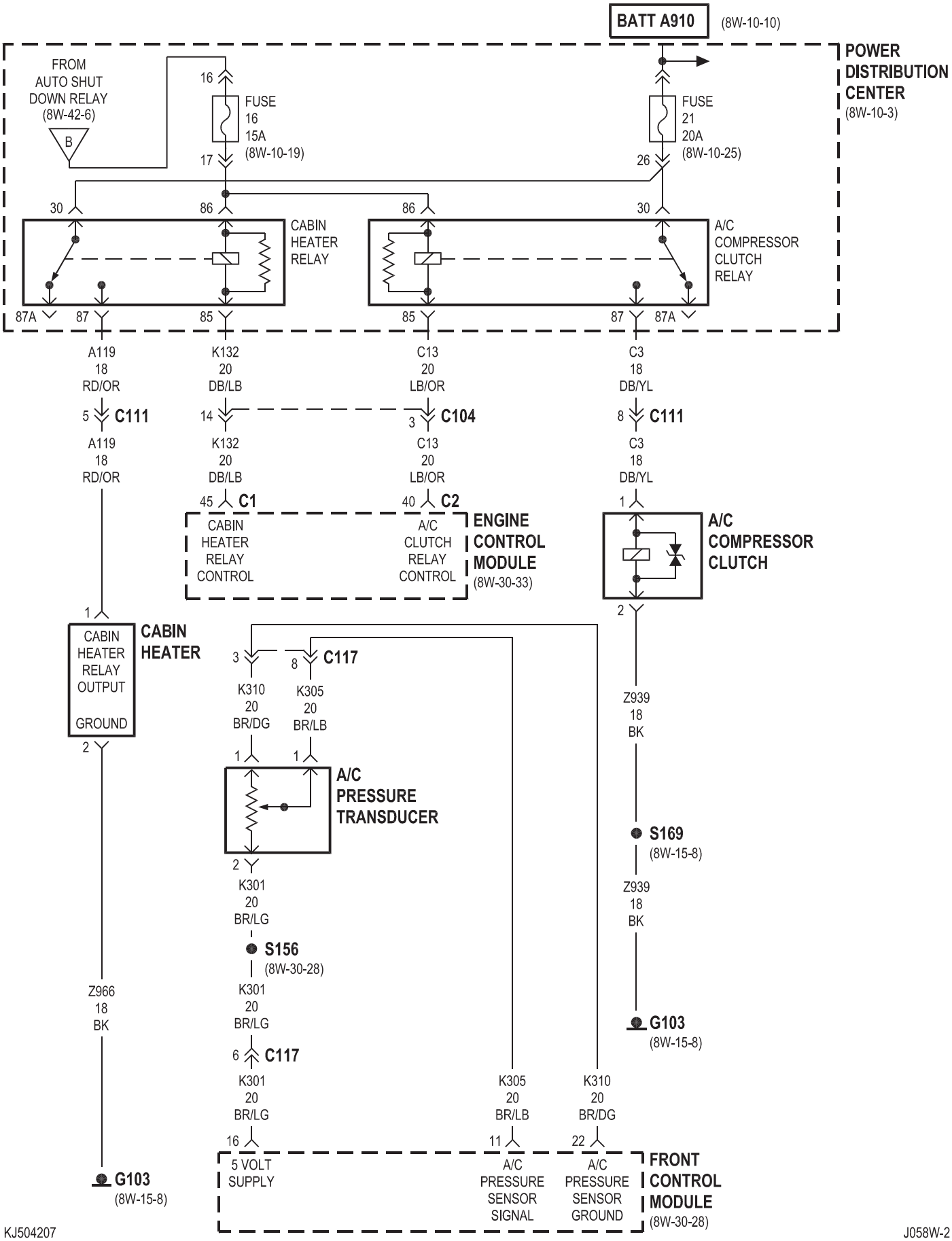

KJ504207

J058W-2

8W-43 AIRBAG SYSTEM

Component	Page
Airbag Control Module	8W-43-2, 3, 4, 5
Belt Tension Sensor	8W-43-5
Clockspring	8W-43-2
Driver Airbag Squib 1	8W-43-2
Driver Airbag Squib 2	8W-43-2
Driver Seat Belt Switch	8W-43-3
Driver Seat Belt Tensioner	8W-43-3
Fuse 13	8W-43-4
Fuse 36	8W-43-2, 5
Fuse 37	8W-43-2
G301	8W-43-2, 5
Instrument Cluster	8W-43-2
Junction Block	8W-43-2, 4, 5
Left Curtain Airbag Squib 1	8W-43-3
Left Front Impact Sensor	8W-43-4
Left Side Impact Sensor 1	8W-43-4
Occupant Classification Module	8W-43-5
Passenger Airbag On/Off Indicator	8W-43-4
Passenger Airbag Squib 1	8W-43-2
Passenger Airbag Squib 2	8W-43-2
Passenger Seat Belt Tensioner	8W-43-4
Passenger Seat Weight Sensor	8W-43-5
Right Curtain Airbag Squib 1	8W-43-3
Right Front Impact Sensor	8W-43-4
Right Side Impact Sensor 1	8W-43-4

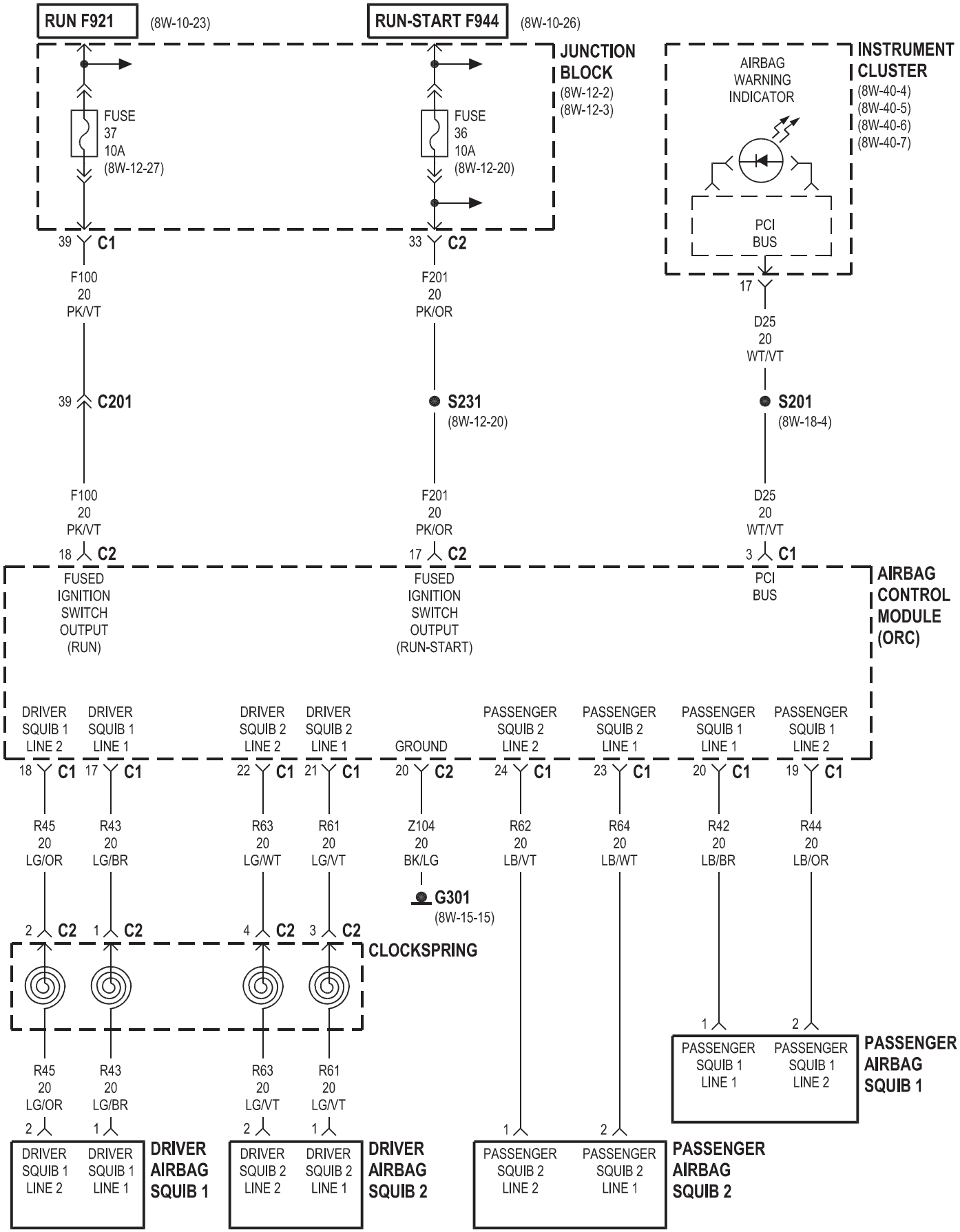
RUN F921
(8W-10-23)
RUN-START F944
(8W-10-26)
JUNCTION BLOCK
(8W-12-2)
(8W-12-3)
FUSE 37 10A (8W-12-27)
FUSE 36 10A (8W-12-20)
INSTRUMENT CLUSTER
(8W-40-4)
(8W-40-5)
(8W-40-6)
(8W-40-7)
AIRBAG WARNING INDICATOR
PCI BUS
39 C1
33 C2
17
F100 20 PK/VT
F201 20 PK/OR
D25 20 WT/VT
39 C201
S231
(8W-12-20)
S201
(8W-18-4)
F100 20 PK/VT
F201 20 PK/OR
D25 20 WT/VT
18 C2
17 C2
3 C1
FUSED IGNITION SWITCH OUTPUT (RUN)
FUSED IGNITION SWITCH OUTPUT (RUN-START)
PCI BUS
AIRBAG CONTROL MODULE (ORC)
DRIVER SQUIB 1 LINE 2
DRIVER SQUIB 1 LINE 1
DRIVER SQUIB 2 LINE 2
DRIVER SQUIB 2 LINE 1
GROUND
PASSENGER SQUIB 2 LINE 2
PASSENGER SQUIB 2 LINE 1
PASSENGER SQUIB 1 LINE 1
PASSENGER SQUIB 1 LINE 2
18 C1
17 C1
22 C1
21 C1
20 C2
24 C1
23 C1
20 C1
19 C1
R45 20 LG/OR
R43 20 LG/BR
R63 20 LG/WT
R61 20 LG/VT
Z104 20 BK/LG
R62 20 LB/VT
R64 20 LB/WT
R42 20 LB/BR
R44 20 LB/OR
G301
(8W-15-15)
2 C2
1 C2
4 C2
3 C2
CLOCKSPRING
1
2
PASSENGER SQUIB 1 LINE 1
PASSENGER SQUIB 1 LINE 2
PASSENGER AIRBAG SQUIB 1
R45 20 LG/OR
R43 20 LG/BR
R63 20 LG/VT
R61 20 LG/VT
2
1
2
1
1
2
DRIVER SQUIB 1 LINE 2
DRIVER SQUIB 1 LINE 1
DRIVER AIRBAG SQUIB 1
DRIVER SQUIB 2 LINE 2
DRIVER SQUIB 2 LINE 1
DRIVER AIRBAG SQUIB 2
PASSENGER SQUIB 2 LINE 2
PASSENGER SQUIB 2 LINE 1
PASSENGER AIRBAG SQUIB 2

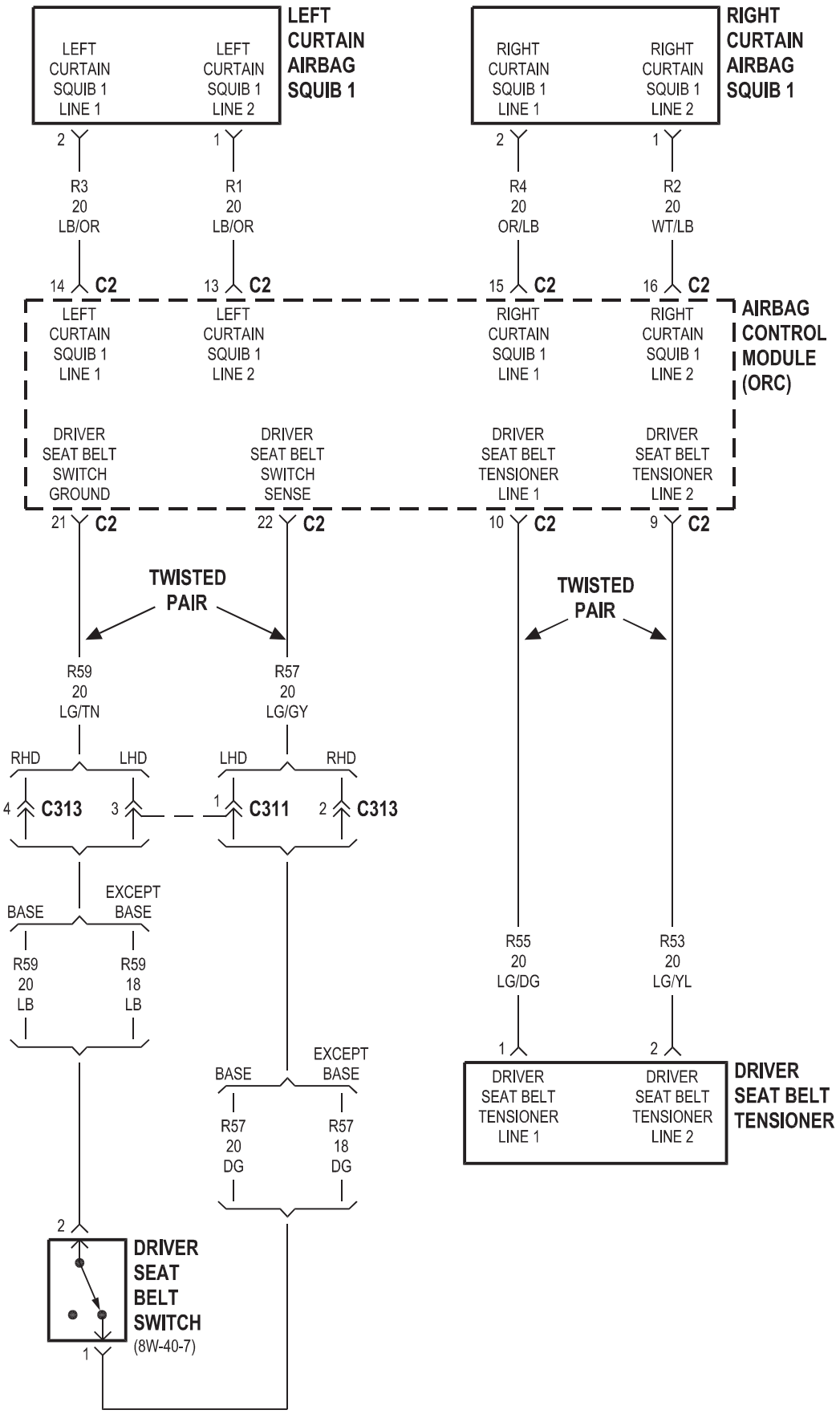
LEFT CURTAIN AIRBAG SQUIB 1
LEFT CURTAIN SQUIB 1 LINE 1
LEFT CURTAIN SQUIB 1 LINE 2
RIGHT CURTAIN AIRBAG SQUIB 1
RIGHT CURTAIN SQUIB 1 LINE 1
RIGHT CURTAIN SQUIB 1 LINE 2
2
1
R3 20 LB/OR
R1 20 LB/OR
R4 20 OR/LB
R2 20 WT/LB
14 C2
13 C2
15 C2
16 C2
AIRBAG CONTROL MODULE (ORC)
LEFT CURTAIN SQUIB 1 LINE 1
LEFT CURTAIN SQUIB 1 LINE 2
RIGHT CURTAIN SQUIB 1 LINE 1
RIGHT CURTAIN SQUIB 1 LINE 2
DRIVER SEAT BELT SWITCH GROUND
DRIVER SEAT BELT SWITCH SENSE
DRIVER SEAT BELT TENSIONER LINE 1
DRIVER SEAT BELT TENSIONER LINE 2
21 C2
22 C2
10 C2
9 C2
TWISTED PAIR
TWISTED PAIR
R59 20 LG/TN
R57 20 LG/GY
RHD
LHD
LHD
RHD
4 C313
3
1 C311
2 C313
BASE
EXCEPT BASE
R59 20 LB
R59 18 LB
R55 20 LG/DG
R53 20 LG/YL
BASE
EXCEPT BASE
R57 20 DG
R57 18 DG
1
2
DRIVER SEAT BELT TENSIONER LINE 1
DRIVER SEAT BELT TENSIONER LINE 2
DRIVER SEAT BELT TENSIONER
2
1
DRIVER SEAT BELT SWITCH
(8W-40-7)

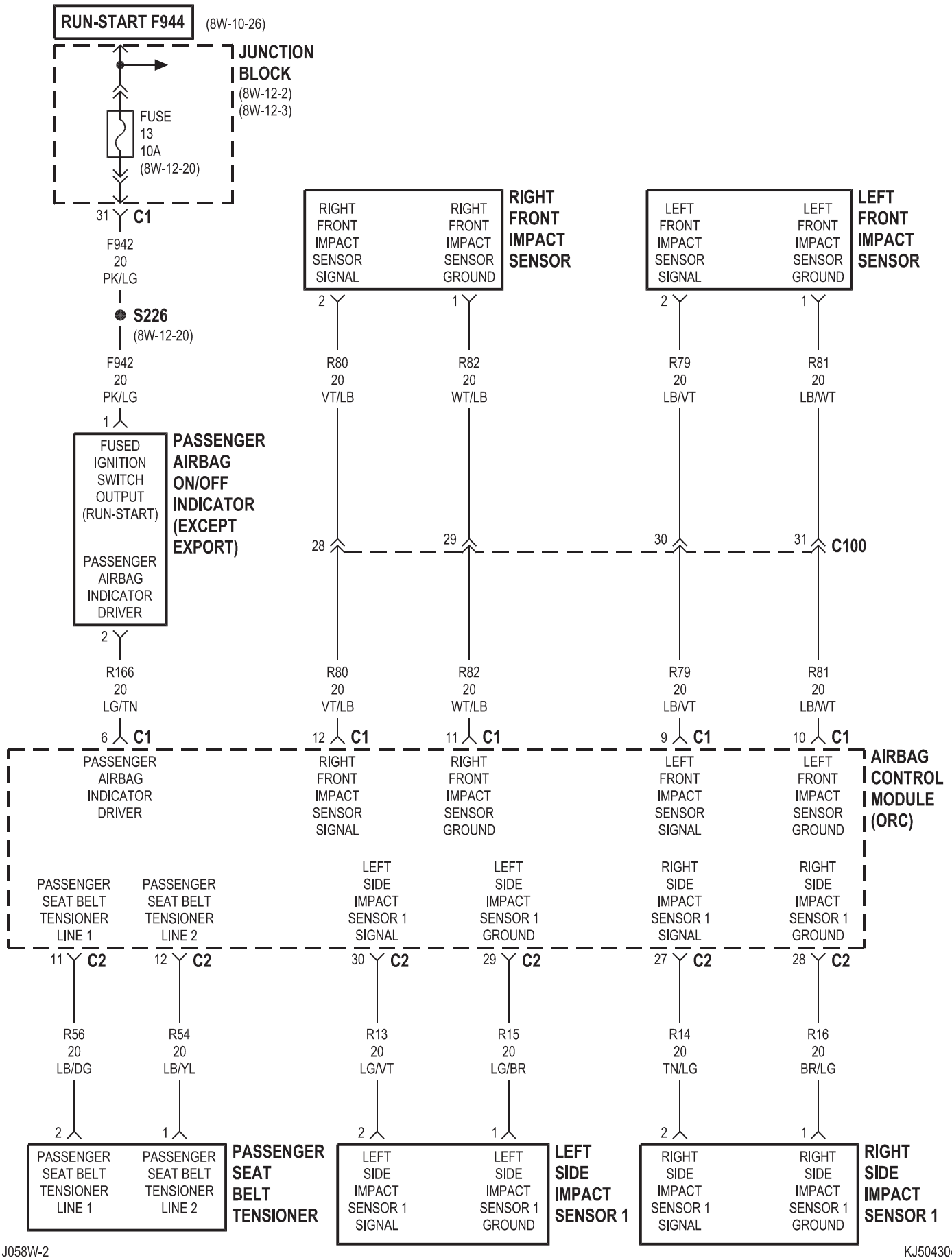

J058W-2 KJ504304

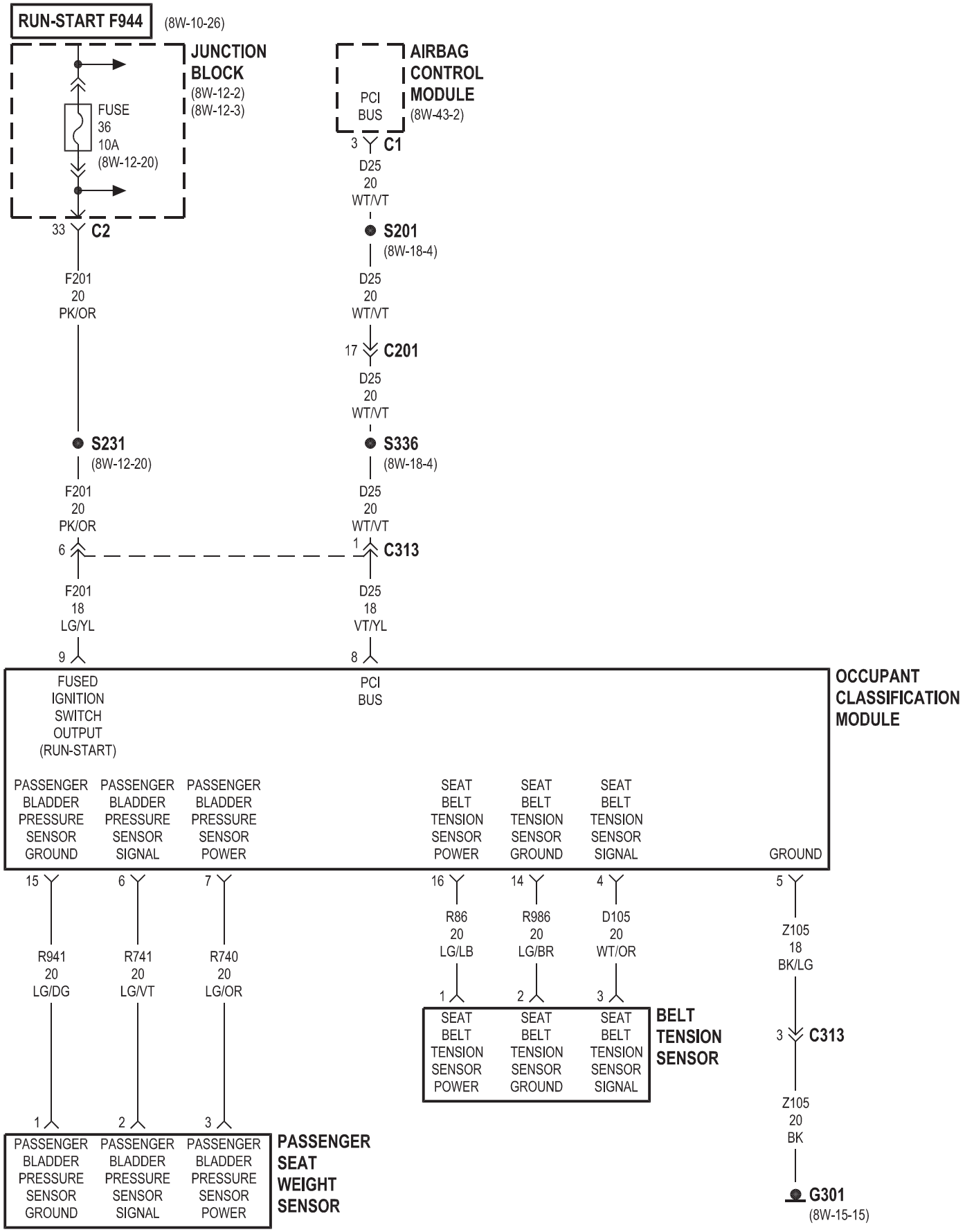
RUN-START F944
(8W-10-26)
JUNCTION BLOCK
(8W-12-2)
(8W-12-3)
FUSE 36 10A
(8W-12-20)
33 C2
F201 20 PK/OR
S231
(8W-12-20)
F201 20 PK/OR
6
F201 18 LG/YL
9
AIRBAG CONTROL MODULE
(8W-43-2)
PCI BUS
3 C1
D25 20 WT/VT
S201
(8W-18-4)
D25 20 WT/VT
17 C201
D25 20 WT/VT
S336
(8W-18-4)
D25 20 WT/VT
1 C313
D25 18 VT/YL
8
OCCUPANT CLASSIFICATION MODULE
FUSED IGNITION SWITCH OUTPUT (RUN-START)
PCI BUS
PASSENGER BLADDER PRESSURE SENSOR GROUND
PASSENGER BLADDER PRESSURE SENSOR SIGNAL
PASSENGER BLADDER PRESSURE SENSOR POWER
SEAT BELT TENSION SENSOR POWER
SEAT BELT TENSION SENSOR GROUND
SEAT BELT TENSION SENSOR SIGNAL
GROUND
15
6
7
16
14
4
5
R941 20 LG/DG
R741 20 LG/VT
R740 20 LG/OR
R86 20 LG/LB
R986 20 LG/BR
D105 20 WT/OR
Z105 18 BK/LG
1
2
3
SEAT BELT TENSION SENSOR POWER
SEAT BELT TENSION SENSOR GROUND
SEAT BELT TENSION SENSOR SIGNAL
BELT TENSION SENSOR
3 C313
Z105 20 BK
G301
(8W-15-15)
PASSENGER BLADDER PRESSURE SENSOR GROUND
PASSENGER BLADDER PRESSURE SENSOR SIGNAL
PASSENGER BLADDER PRESSURE SENSOR POWER
PASSENGER SEAT WEIGHT SENSOR

8W-44 INTERIOR LIGHTING

Component	Page
Body Control Module	8W-44-2, 3, 4
Cargo Lamp	8W-44-4
Dome Lamp	8W-44-2
Fuse 34	8W-44-2, 4
Junction Block	8W-44-2, 3, 4
Left Courtesy Lamp	8W-44-2
Left Visor/Vanity Lamp	8W-44-3
Overhead Map/Reading Lamp	8W-44-4
Right Courtesy Lamp	8W-44-2
Right Visor/Vanity Lamp	8W-44-3

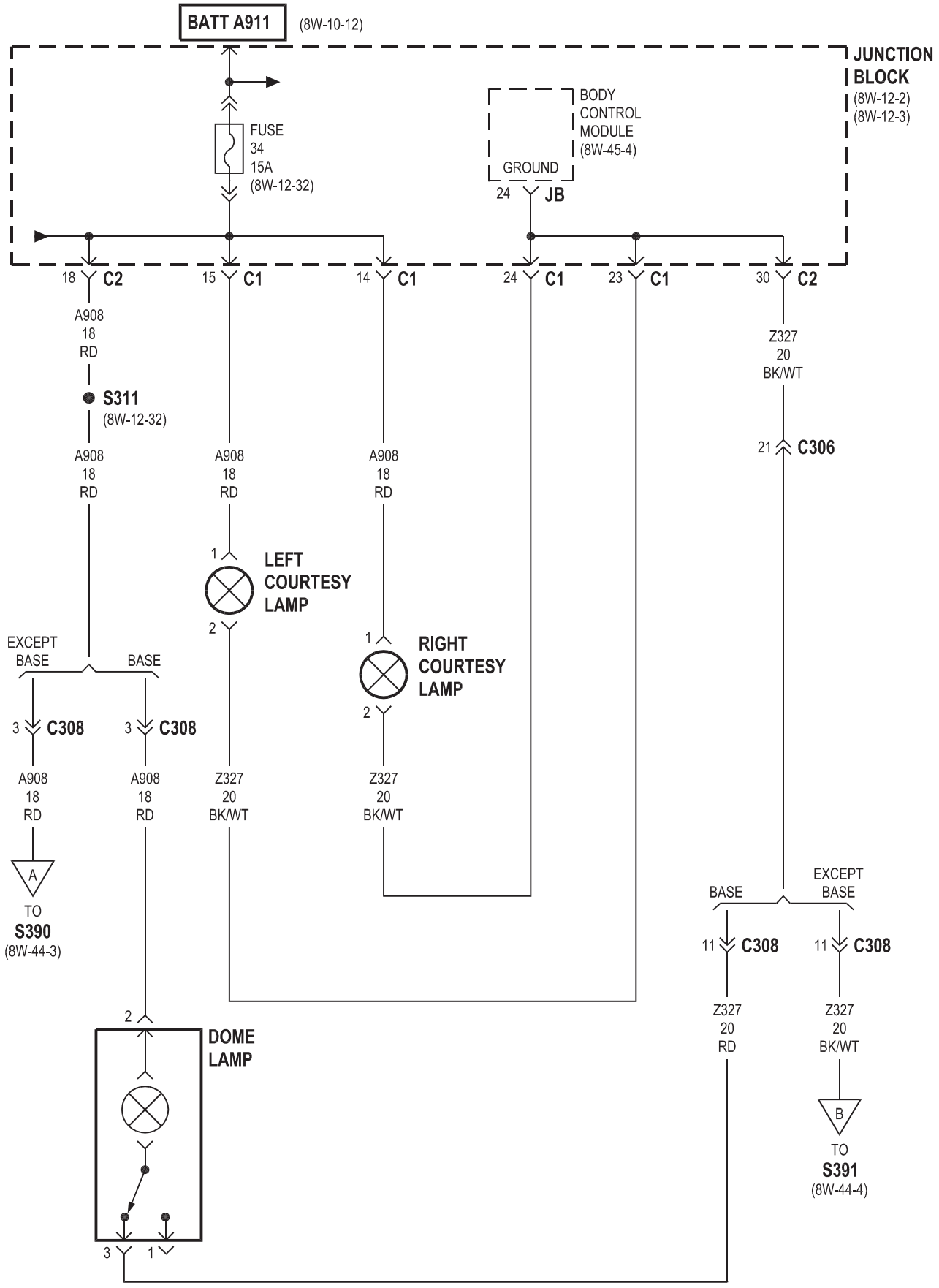
BATT A911
(8W-10-12)
JUNCTION BLOCK
(8W-12-2)
(8W-12-3)
FUSE 34 15A
(8W-12-32)
BODY CONTROL MODULE
(8W-45-4)
GROUND
24 JB
18 C2
15 C1
14 C1
24 C1
23 C1
30 C2
A908 18 RD
S311
(8W-12-32)
Z327 20 BK/WT
21 C306
LEFT COURTESY LAMP
RIGHT COURTESY LAMP
EXCEPT BASE
BASE
3 C308
A908 18 RD
Z327 20 BK/WT
TO S390
(8W-44-3)
11 C308
Z327 20 RD
TO S391
(8W-44-4)
DOME LAMP

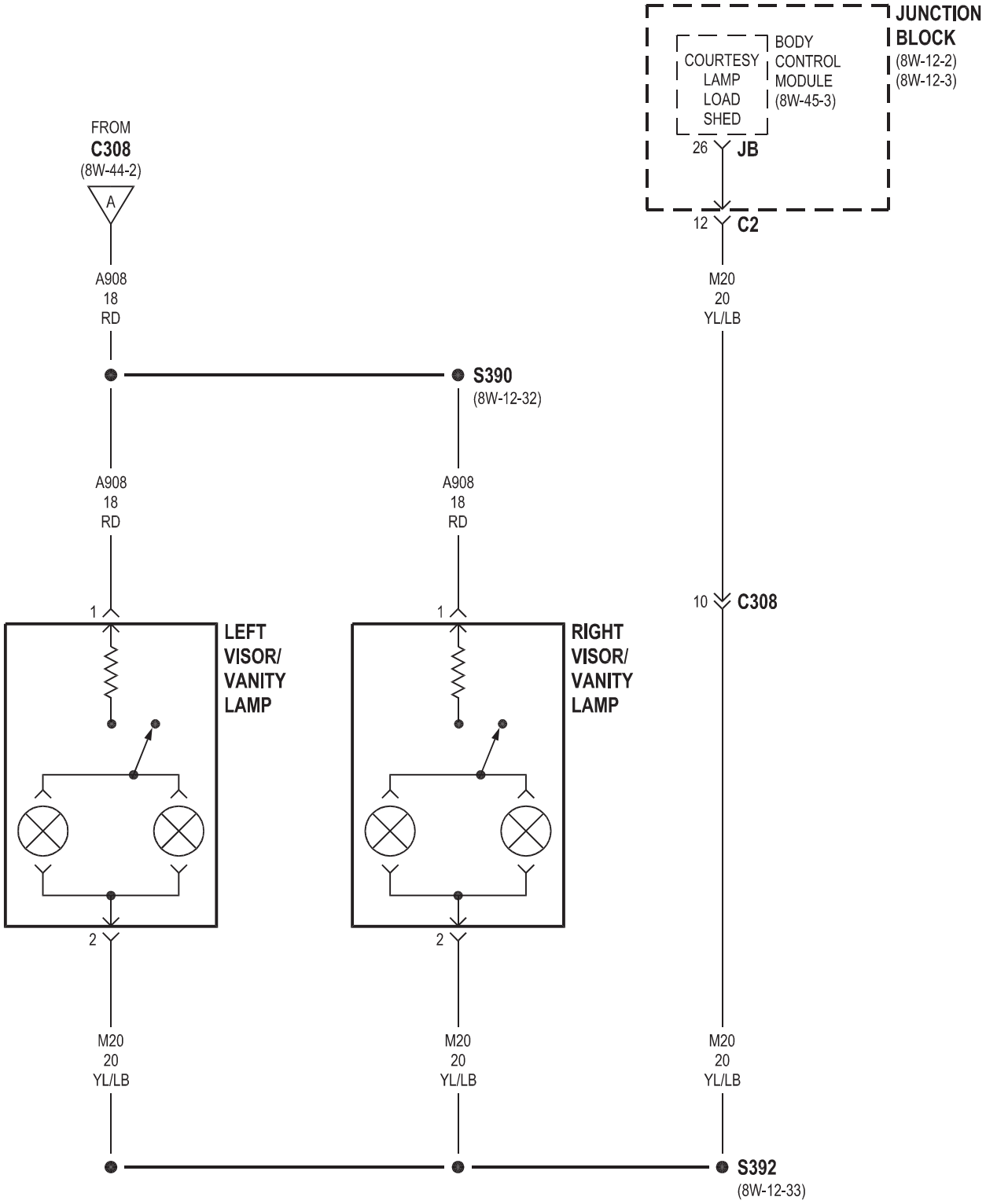
JUNCTION BLOCK
(8W-12-2)
(8W-12-3)
BODY CONTROL MODULE
(8W-45-3)
COURTESY LAMP LOAD SHED
26
JB
12
C2
FROM
C308
(8W-44-2)
A
A908
18
RD
M20
20
YL/LB
S390
(8W-12-32)
A908
18
RD
A908
18
RD
10
C308
1
1
LEFT VISOR/ VANITY LAMP
RIGHT VISOR/ VANITY LAMP
2
2
M20
20
YL/LB
M20
20
YL/LB
M20
20
YL/LB
S392
(8W-12-33)

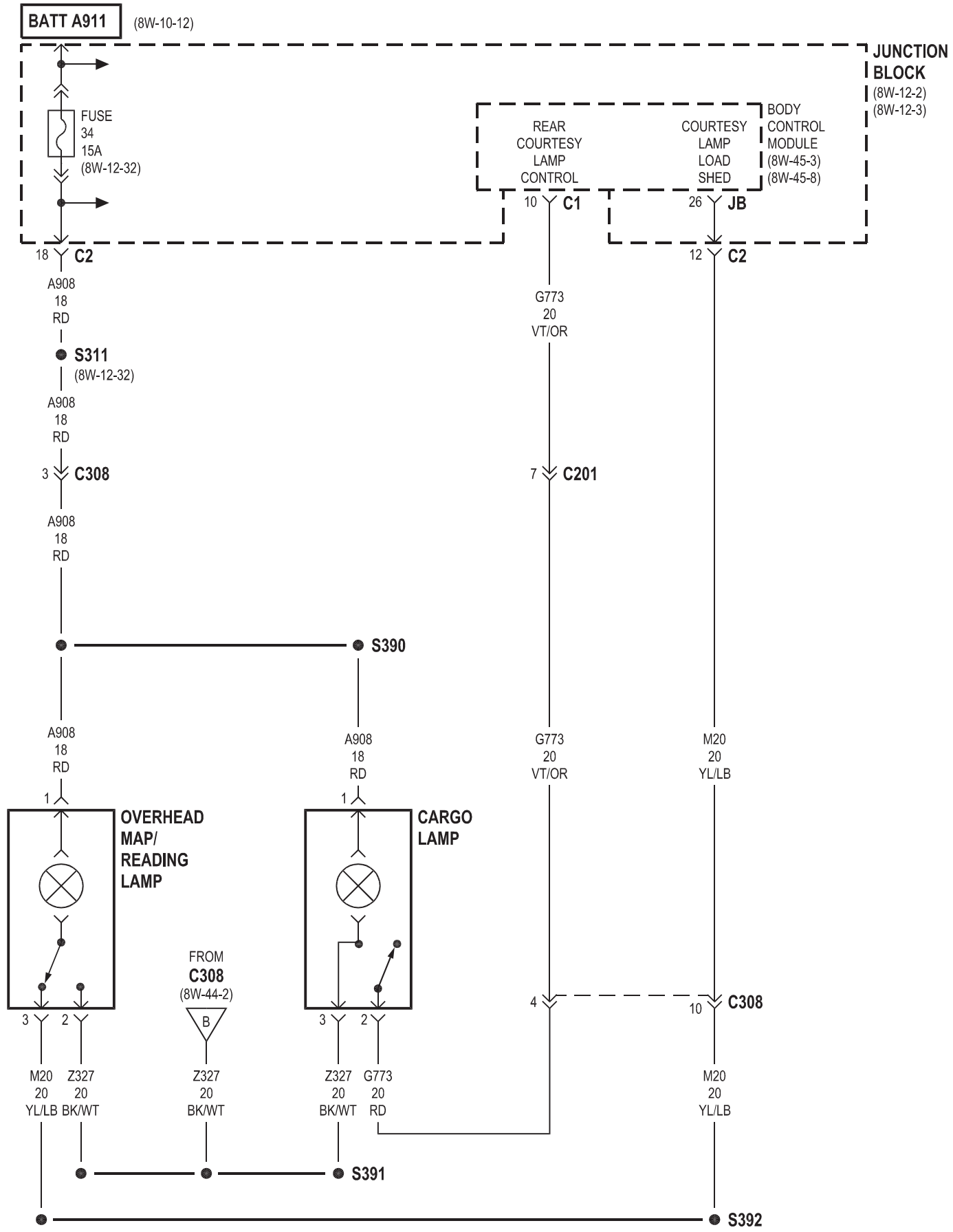
BATT A911
(8W-10-12)
JUNCTION BLOCK
(8W-12-2)
(8W-12-3)
FUSE 34 15A (8W-12-32)
REAR COURTESY LAMP CONTROL
COURTESY LAMP LOAD SHED
BODY CONTROL MODULE
(8W-45-3)
(8W-45-8)
10 C1
26 JB
18 C2
12 C2
A908 18 RD
S311
(8W-12-32)
A908 18 RD
3 C308
G773 20 VT/OR
7 C201
A908 18 RD
S390
A908 18 RD
A908 18 RD
G773 20 VT/OR
M20 20 YL/LB
1
OVERHEAD MAP/ READING LAMP
1
CARGO LAMP
FROM C308
(8W-44-2)
B
4
10 C308
3 2
3 2
M20 20 YL/LB
Z327 20 BK/WT
Z327 20 BK/WT
Z327 20 BK/WT
G773 20 RD
M20 20 YL/LB
S391
S392

8W-45 BODY CONTROL MODULE

Component	Page
A/C-Heater Control	8W-45-5
Anti-Lock Brake Module	8W-45-5
Body Control Module	8W-45-2, 3, 4, 5, 6, 7, 8, 9, 10
Brake Lamp Switch	8W-45-2
Cargo Lamp	8W-45-4, 8
Clockspring	8W-45-5
Data Link Connector	8W-45-9, 10
Defogger Relay	8W-45-3
Dome Lamp	8W-45-4
Door Lock Relay	8W-45-4
Driver Door Lock Motor/Ajar Switch	8W-45-9, 10
Driver Door Unlock Relay	8W-45-3
Flip-Up Glass Release Motor	8W-45-8
Flip-Up Glass Release Switch	8W-45-8
Front Fog Lamp Relay	8W-45-4
Fuse 1	8W-45-7
Fuse 6	8W-45-3
Fuse 13	8W-45-2
Fuse 32	8W-45-2
Fuse 34	8W-45-2
G111	8W-45-7
G202	8W-45-2, 6, 10
Hazard Switch/Combination Flasher	8W-45-5
High Beam Relay	8W-45-3
Hood Ajar Switch	8W-45-7
Horn Relay	8W-45-7
Ignition Switch	8W-45-6
Instrument Cluster	8W-45-6
Junction Block	8W-45-2, 3, 4, 7, 8
Left Courtesy Lamp	8W-45-4
Left Door Lock Switch	8W-45-4, 7
Left Rear Door Lock Motor/Ajar Switch	8W-45-6
Left Remote Radio Switch	8W-45-5
Left Visor/Vanity Lamp	8W-45-3
Lightbar Switch	8W-45-5
Low Beam Relay	8W-45-3
Multi-Function Switch	8W-45-3, 5, 6
Overhead Map/Reading Lamp	8W-45-3, 4
Park Lamp Relay	8W-45-3
Passenger Door Lock Motor/Ajar Switch	8W-45-9, 10
Passenger Door Unlock Relay	8W-45-3
Power Distribution Center	8W-45-4
Powertrain Control Module	8W-45-5
Rear Fog Lamp Relay	8W-45-2
Rear Wiper Motor	8W-45-6, 8
Right Courtesy Lamp	8W-45-4
Right Door Lock Switch	8W-45-4, 7
Right Rear Door Lock Motor/Ajar Switch	8W-45-6
Right Remote Radio Switch	8W-45-5
Right Visor/Vanity Lamp	8W-45-3
Tailgate Cylinder Lock Switch	8W-45-8, 9
Tailgate Lock Motor/Ajar Switch	8W-45-7, 8
Washer Pump	8W-45-6
Wiper High/Low Relay	8W-45-4
Wiper On/Off Relay	8W-45-4

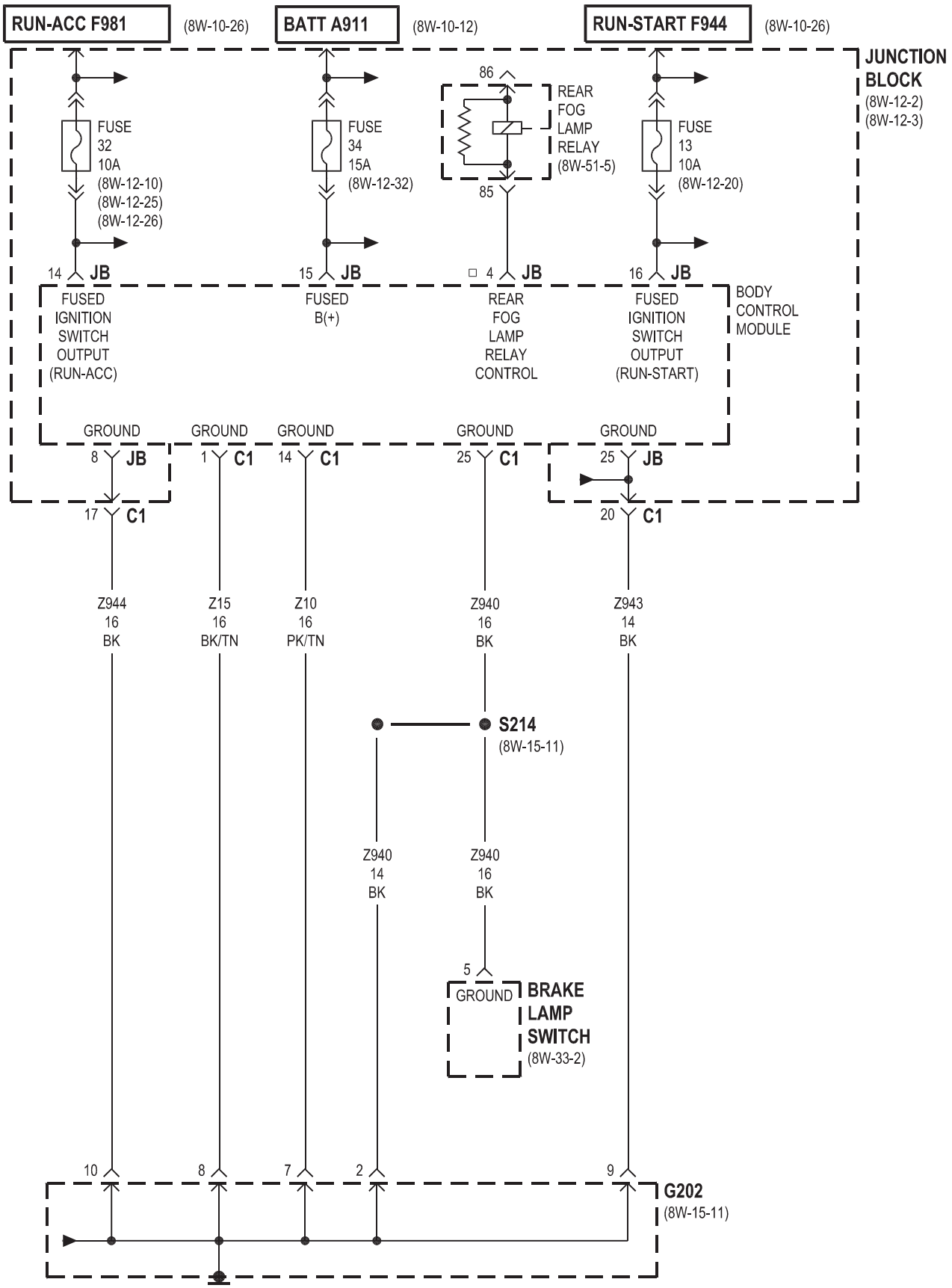
RUN-ACC F981
(8W-10-26)
BATT A911
(8W-10-12)
RUN-START F944
(8W-10-26)
JUNCTION BLOCK
(8W-12-2)
(8W-12-3)
FUSE 32 10A
(8W-12-10)
(8W-12-25)
(8W-12-26)
FUSE 34 15A
(8W-12-32)
86
REAR FOG LAMP RELAY
(8W-51-5)
85
FUSE 13 10A
(8W-12-20)
14 JB
15 JB
4 JB
16 JB
FUSED IGNITION SWITCH OUTPUT (RUN-ACC)
FUSED B(+)
REAR FOG LAMP RELAY CONTROL
FUSED IGNITION SWITCH OUTPUT (RUN-START)
BODY CONTROL MODULE
GROUND
GROUND
GROUND
GROUND
GROUND
8 JB
1 C1
14 C1
25 C1
25 JB
17 C1
20 C1
Z944 16 BK
Z15 16 BK/TN
Z10 16 PK/TN
Z940 16 BK
Z943 14 BK
S214
(8W-15-11)
Z940 14 BK
Z940 16 BK
5
GROUND
BRAKE LAMP SWITCH
(8W-33-2)
10
8
7
2
9
G202
(8W-15-11)

□ PREMIUM

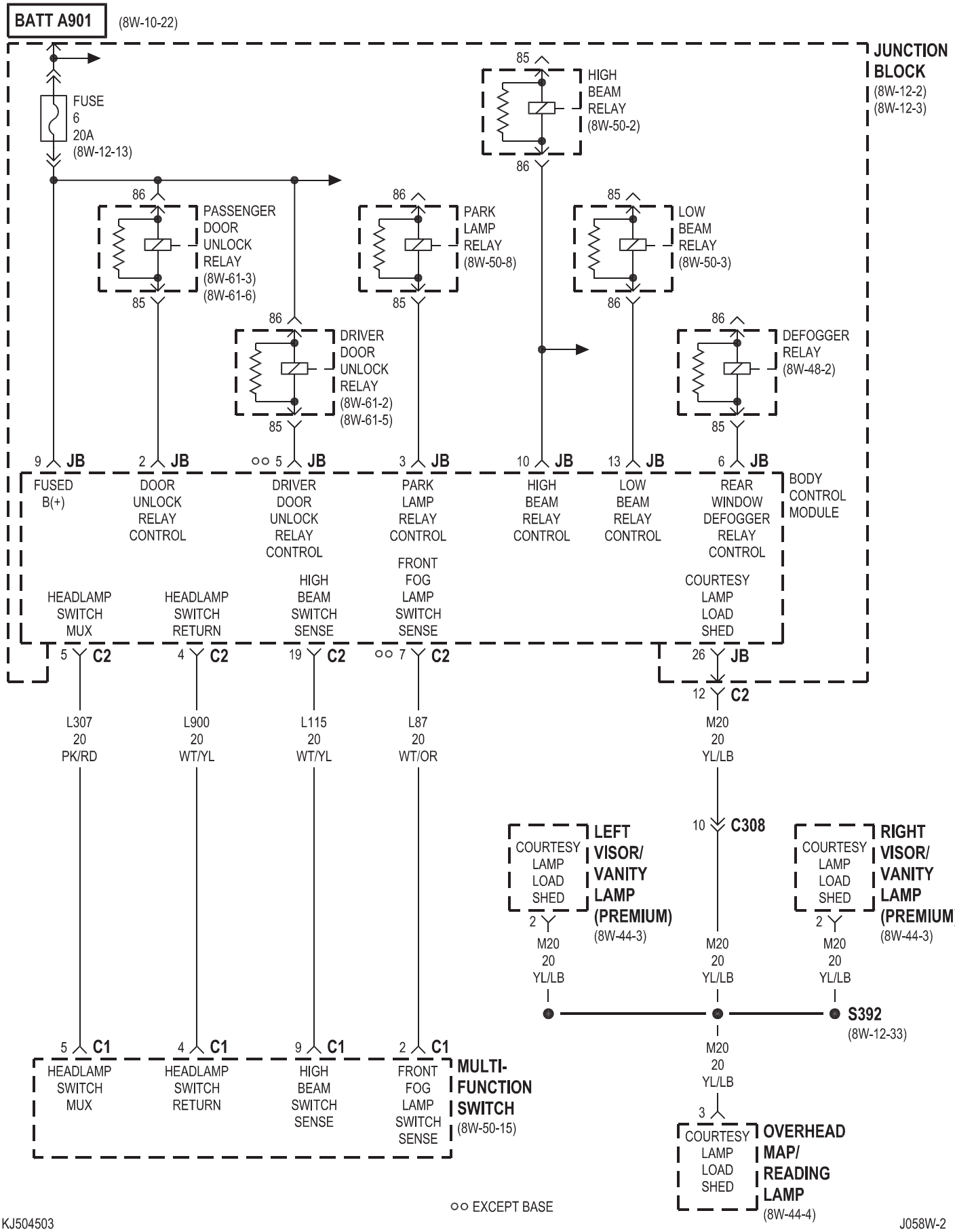
BATT A901
(8W-10-22)
JUNCTION BLOCK
(8W-12-2)
(8W-12-3)
FUSE 6 20A (8W-12-13)
HIGH BEAM RELAY (8W-50-2)
PASSENGER DOOR UNLOCK RELAY (8W-61-3) (8W-61-6)
PARK LAMP RELAY (8W-50-8)
LOW BEAM RELAY (8W-50-3)
DRIVER DOOR UNLOCK RELAY (8W-61-2) (8W-61-5)
DEFOGGER RELAY (8W-48-2)
9 JB FUSED B(+)
2 JB DOOR UNLOCK RELAY CONTROL
oo 5 JB DRIVER DOOR UNLOCK RELAY CONTROL
3 JB PARK LAMP RELAY CONTROL
10 JB HIGH BEAM RELAY CONTROL
13 JB LOW BEAM RELAY CONTROL
6 JB REAR WINDOW DEFOGGER RELAY CONTROL
BODY CONTROL MODULE
HEADLAMP SWITCH MUX
HEADLAMP SWITCH RETURN
HIGH BEAM SWITCH SENSE
FRONT FOG LAMP SWITCH SENSE
COURTESY LAMP LOAD SHED
5 C2
4 C2
19 C2
oo 7 C2
26 JB
12 C2
L307 20 PK/RD
L900 20 WT/YL
L115 20 WT/YL
L87 20 WT/OR
M20 20 YL/LB
10 C308
COURTESY LAMP LOAD SHED
LEFT VISOR/ VANITY LAMP (PREMIUM)
(8W-44-3)
RIGHT VISOR/ VANITY LAMP (PREMIUM)
(8W-44-3)
2
M20 20 YL/LB
S392
(8W-12-33)
5 C1
4 C1
9 C1
2 C1
HEADLAMP SWITCH MUX
HEADLAMP SWITCH RETURN
HIGH BEAM SWITCH SENSE
FRONT FOG LAMP SWITCH SENSE
MULTI-FUNCTION SWITCH
(8W-50-15)
3
COURTESY LAMP LOAD SHED
OVERHEAD MAP/ READING LAMP
(8W-44-4)
oo EXCEPT BASE

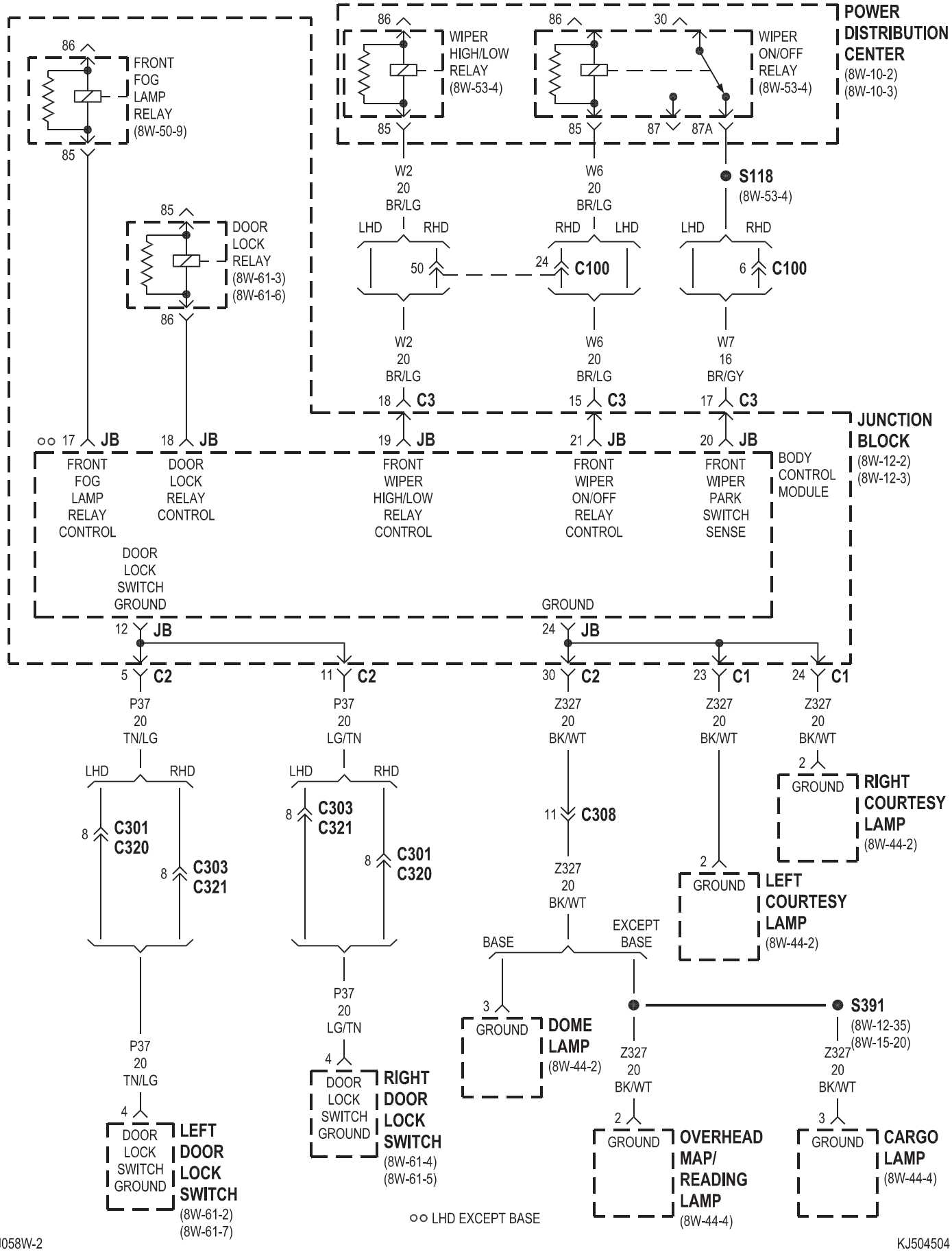
POWER DISTRIBUTION CENTER
(8W-10-2)
(8W-10-3)
WIPER HIGH/LOW RELAY
(8W-53-4)
WIPER ON/OFF RELAY
(8W-53-4)
FRONT FOG LAMP RELAY
(8W-50-9)
DOOR LOCK RELAY
(8W-61-3)
(8W-61-6)
86
85
30
87
87A
W2 20 BR/LG
W6 20 BR/LG
W7 16 BR/GY
S118
(8W-53-4)
LHD
RHD
50
24
C100
6
C100
18 C3
15 C3
17 C3
JUNCTION BLOCK
(8W-12-2)
(8W-12-3)
17 JB
18 JB
19 JB
21 JB
20 JB
FRONT FOG LAMP RELAY CONTROL
DOOR LOCK RELAY CONTROL
FRONT WIPER HIGH/LOW RELAY CONTROL
FRONT WIPER ON/OFF RELAY CONTROL
FRONT WIPER PARK SWITCH SENSE
BODY CONTROL MODULE
DOOR LOCK SWITCH GROUND
GROUND
12 JB
24 JB
5 C2
11 C2
30 C2
23 C1
24 C1
P37 20 TN/LG
P37 20 LG/TN
Z327 20 BK/WT
8 C301 C320
8 C303 C321
11 C308
2 GROUND
RIGHT COURTESY LAMP
(8W-44-2)
LEFT COURTESY LAMP
(8W-44-2)
BASE
EXCEPT BASE
3 GROUND
DOME LAMP
(8W-44-2)
S391
(8W-12-35)
(8W-15-20)
4 DOOR LOCK SWITCH GROUND
LEFT DOOR LOCK SWITCH
(8W-61-2)
(8W-61-7)
RIGHT DOOR LOCK SWITCH
(8W-61-4)
(8W-61-5)
OVERHEAD MAP/ READING LAMP
(8W-44-4)
CARGO LAMP
(8W-44-4)
LHD EXCEPT BASE

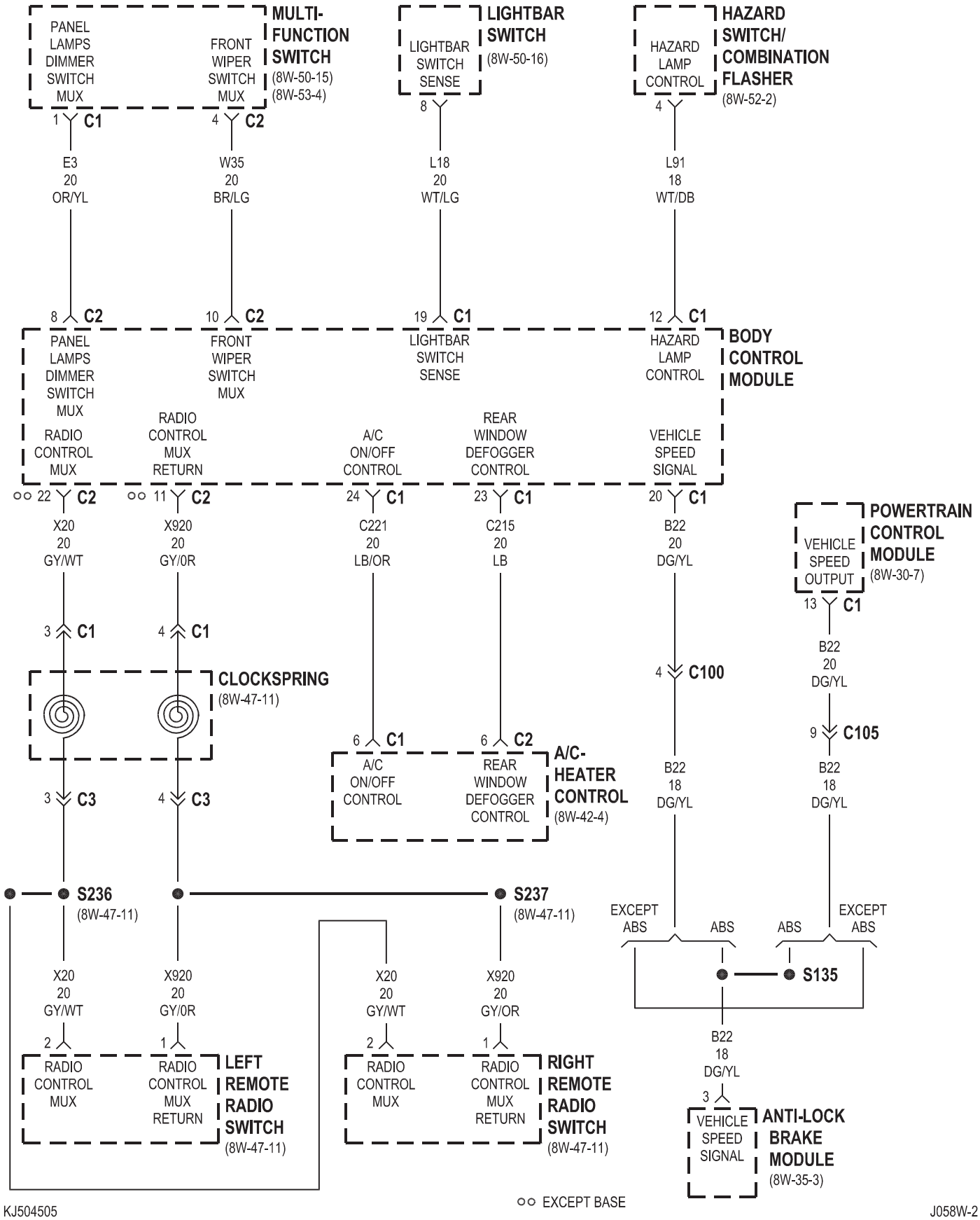

KJ504505

J058W-2

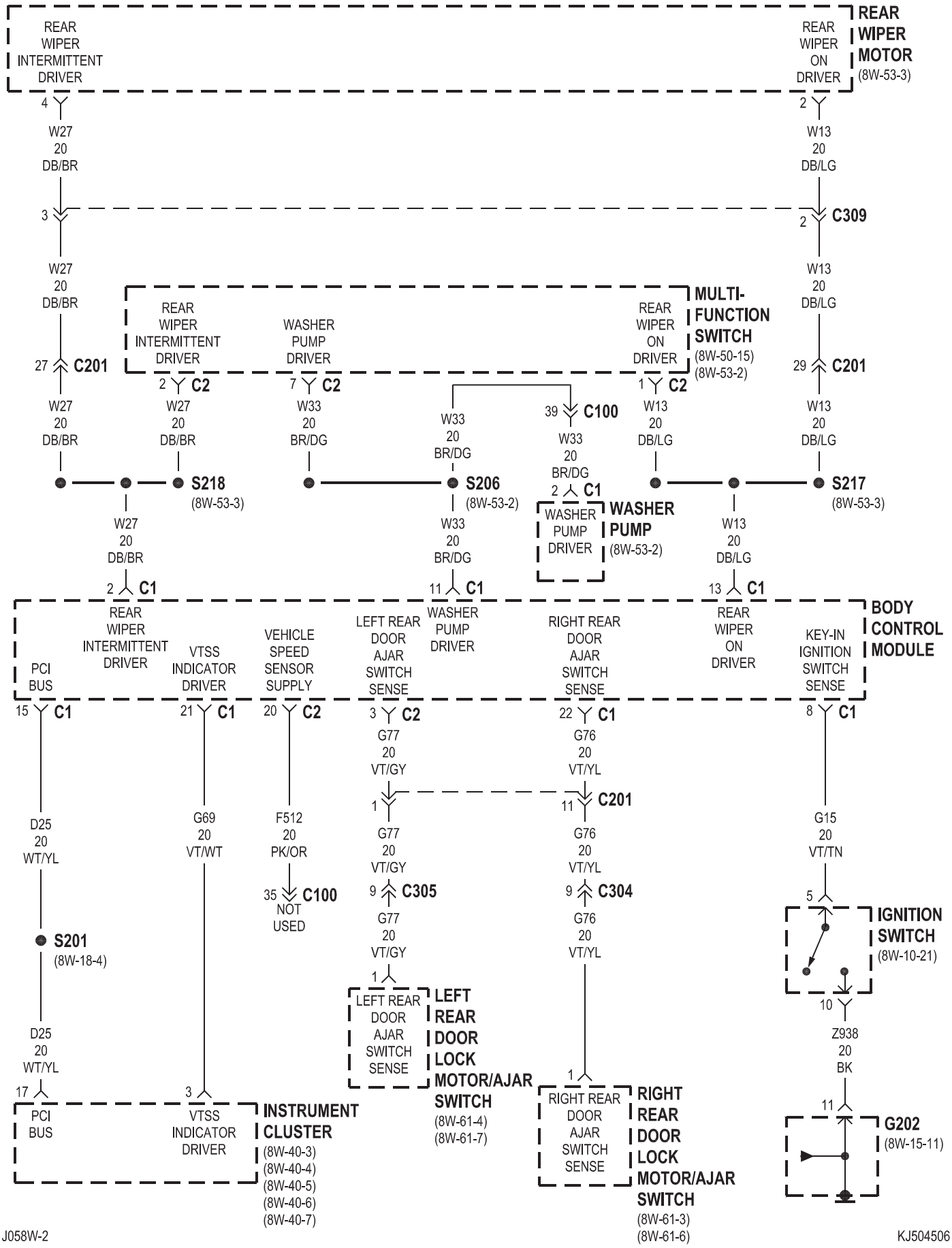
REAR WIPER INTERMITTENT DRIVER
REAR WIPER ON DRIVER
REAR WIPER MOTOR
(8W-53-3)
4
W27 20 DB/BR
2
W13 20 DB/LG
3
C309
2
W27 20 DB/BR
W13 20 DB/LG
REAR WIPER INTERMITTENT DRIVER
WASHER PUMP DRIVER
REAR WIPER ON DRIVER
MULTI-FUNCTION SWITCH
(8W-50-15)
(8W-53-2)
27 C201
2 C2
7 C2
1 C2
29 C201
W27 20 DB/BR
W27 20 DB/BR
W33 20 BR/DG
W33 20 BR/DG
39 C100
W33 20 BR/DG
W13 20 DB/LG
W13 20 DB/LG
S218
(8W-53-3)
S206
(8W-53-2)
2 C1
S217
(8W-53-3)
WASHER PUMP DRIVER
WASHER PUMP
(8W-53-2)
W27 20 DB/BR
W33 20 BR/DG
W13 20 DB/LG
2 C1
11 C1
13 C1
BODY CONTROL MODULE
PCI BUS
REAR WIPER INTERMITTENT DRIVER
VTSS INDICATOR DRIVER
VEHICLE SPEED SENSOR SUPPLY
LEFT REAR DOOR AJAR SWITCH SENSE
WASHER PUMP DRIVER
RIGHT REAR DOOR AJAR SWITCH SENSE
REAR WIPER ON DRIVER
KEY-IN IGNITION SWITCH SENSE
15 C1
21 C1
20 C2
3 C2
22 C1
8 C1
G77 20 VT/GY
G76 20 VT/YL
1
C201
11
D25 20 WT/YL
G69 20 VT/WT
F512 20 PK/OR
G77 20 VT/GY
G76 20 VT/YL
G15 20 VT/TN
35 C100
NOT USED
9 C305
9 C304
5
S201
(8W-18-4)
G77 20 VT/GY
G76 20 VT/YL
IGNITION SWITCH
(8W-10-21)
1
10
LEFT REAR DOOR AJAR SWITCH SENSE
LEFT REAR DOOR LOCK MOTOR/AJAR SWITCH
(8W-61-4)
(8W-61-7)
Z938 20 BK
D25 20 WT/YL
1
17
3
11
PCI BUS
VTSS INDICATOR DRIVER
INSTRUMENT CLUSTER
(8W-40-3)
(8W-40-4)
(8W-40-5)
(8W-40-6)
(8W-40-7)
RIGHT REAR DOOR AJAR SWITCH SENSE
RIGHT REAR DOOR LOCK MOTOR/AJAR SWITCH
(8W-61-3)
(8W-61-6)
G202
(8W-15-11)

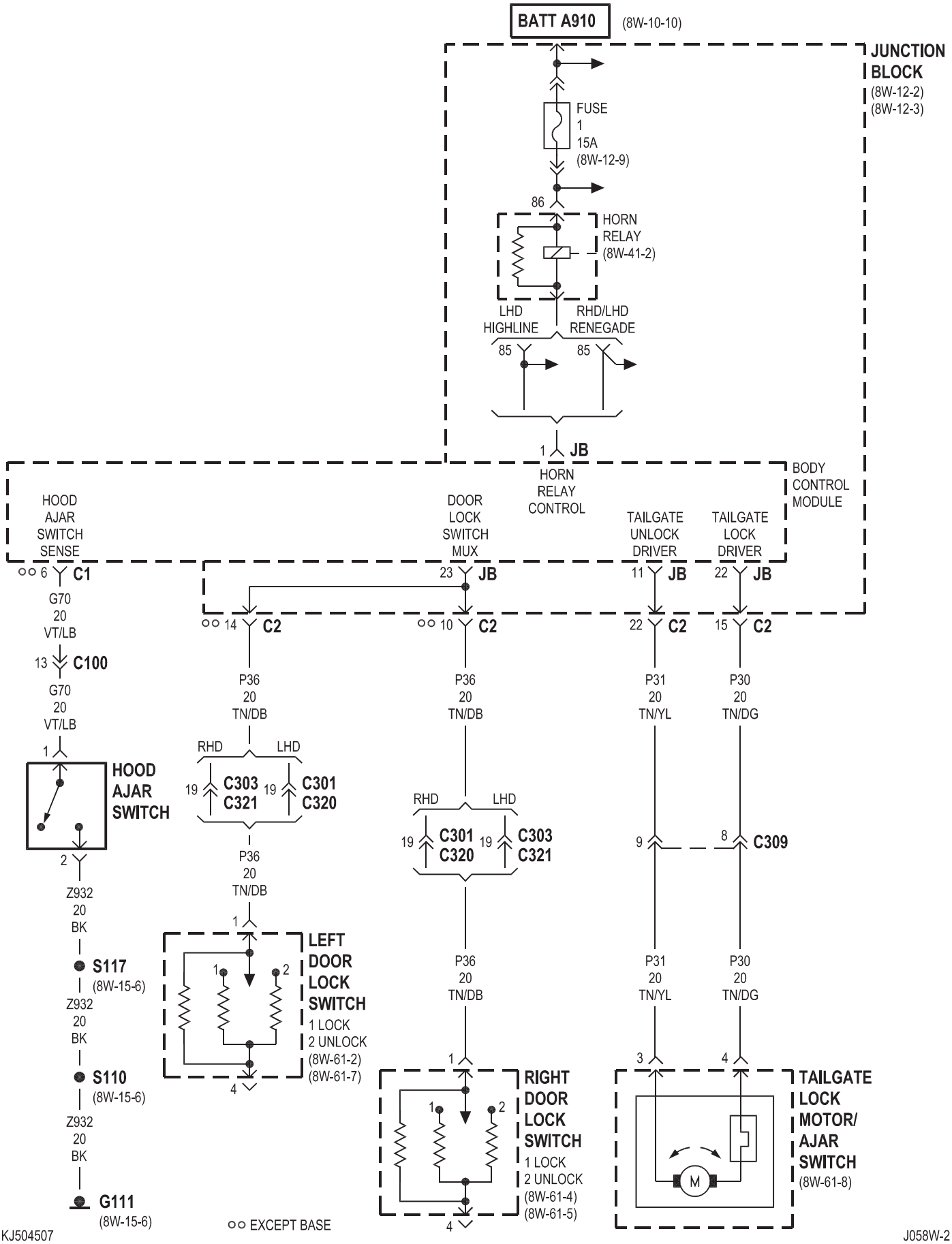
BATT A910
(8W-10-10)
JUNCTION BLOCK
(8W-12-2)
(8W-12-3)
FUSE
1
15A
(8W-12-9)
86
HORN RELAY
(8W-41-2)
LHD HIGHLINE
RHD/LHD RENEGADE
85
85
1
JB
HORN RELAY CONTROL
BODY CONTROL MODULE
HOOD AJAR SWITCH SENSE
DOOR LOCK SWITCH MUX
TAILGATE UNLOCK DRIVER
TAILGATE LOCK DRIVER
6
C1
23
JB
11
JB
22
JB
G70
20
VT/LB
14
C2
10
C2
22
C2
15
C2
13
C100
P36
20
TN/DB
P36
20
TN/DB
P31
20
TN/YL
P30
20
TN/DG
G70
20
VT/LB
1
HOOD AJAR SWITCH
RHD
LHD
19
C303
C321
19
C301
C320
RHD
LHD
19
C301
C320
19
C303
C321
9
8
C309
2
Z932
20
BK
P36
20
TN/DB
1
LEFT DOOR LOCK SWITCH
1 LOCK
2 UNLOCK
(8W-61-2)
(8W-61-7)
4
S117
(8W-15-6)
Z932
20
BK
P36
20
TN/DB
P31
20
TN/YL
P30
20
TN/DG
S110
(8W-15-6)
1
RIGHT DOOR LOCK SWITCH
1 LOCK
2 UNLOCK
(8W-61-4)
(8W-61-5)
4
3
4
TAILGATE LOCK MOTOR/ AJAR SWITCH
(8W-61-8)
M
Z932
20
BK
G111
(8W-15-6)
EXCEPT BASE
KJ504507
J058W-2

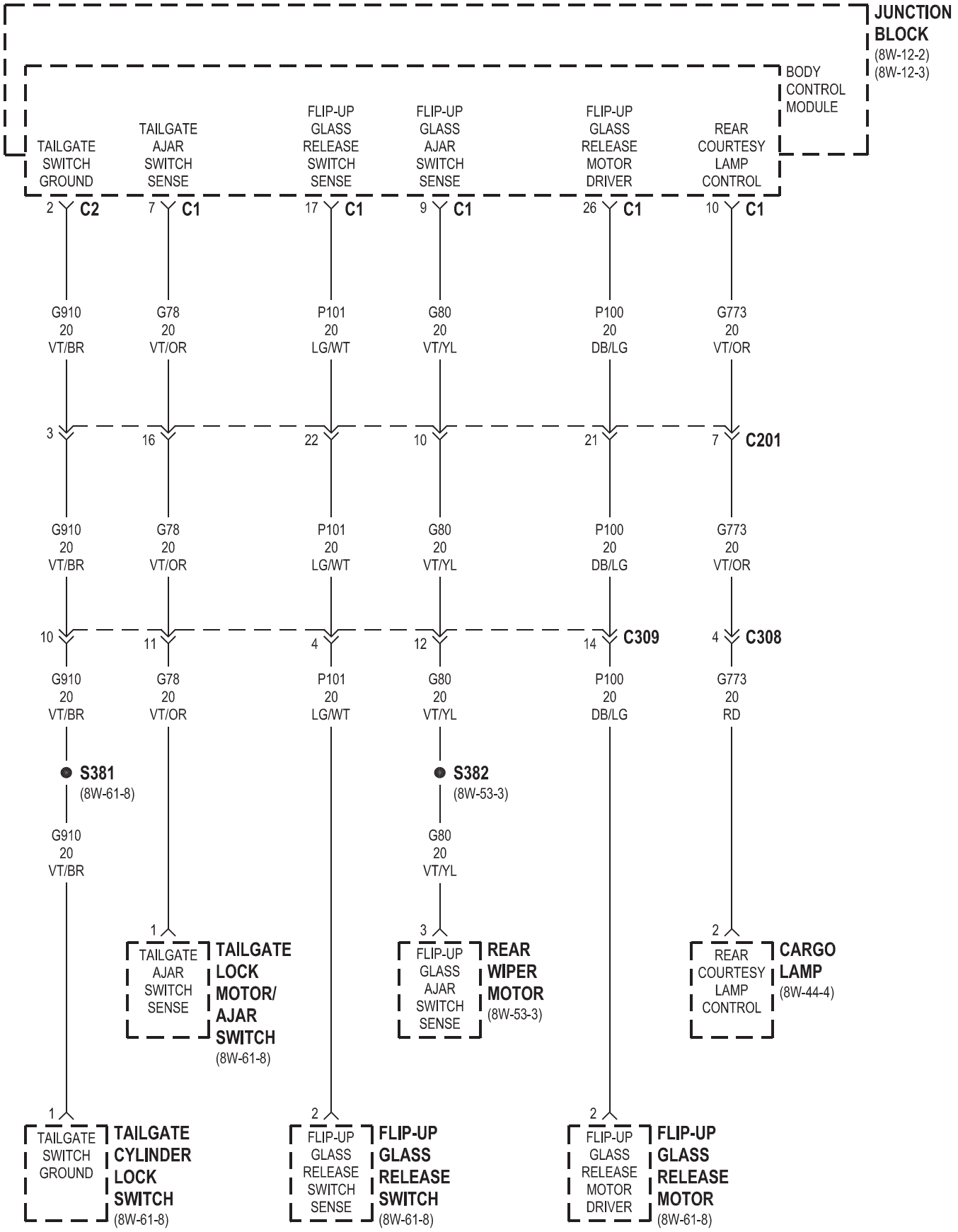
JUNCTION BLOCK
(8W-12-2)
(8W-12-3)
BODY CONTROL MODULE
TAILGATE SWITCH GROUND
TAILGATE AJAR SWITCH SENSE
FLIP-UP GLASS RELEASE SWITCH SENSE
FLIP-UP GLASS AJAR SWITCH SENSE
FLIP-UP GLASS RELEASE MOTOR DRIVER
REAR COURTESY LAMP CONTROL
2 C2
7 C1
17 C1
9 C1
26 C1
10 C1
G910 20 VT/BR
G78 20 VT/OR
P101 20 LG/WT
G80 20 VT/YL
P100 20 DB/LG
G773 20 VT/OR
3
16
22
10
21
7 C201
G910 20 VT/BR
G78 20 VT/OR
P101 20 LG/WT
G80 20 VT/YL
P100 20 DB/LG
G773 20 VT/OR
10
11
4
12
14 C309
4 C308
G910 20 VT/BR
G78 20 VT/OR
P101 20 LG/WT
G80 20 VT/YL
P100 20 DB/LG
G773 20 RD
S381
(8W-61-8)
S382
(8W-53-3)
G910 20 VT/BR
G80 20 VT/YL
1
TAILGATE AJAR SWITCH SENSE
TAILGATE LOCK MOTOR/ AJAR SWITCH
(8W-61-8)
3
FLIP-UP GLASS AJAR SWITCH SENSE
REAR WIPER MOTOR
(8W-53-3)
2
REAR COURTESY LAMP CONTROL
CARGO LAMP
(8W-44-4)
1
TAILGATE SWITCH GROUND
TAILGATE CYLINDER LOCK SWITCH
(8W-61-8)
2
FLIP-UP GLASS RELEASE SWITCH SENSE
FLIP-UP GLASS RELEASE SWITCH
(8W-61-8)
2
FLIP-UP GLASS RELEASE MOTOR DRIVER
FLIP-UP GLASS RELEASE MOTOR
(8W-61-8)

LHD EXCEPT BASE

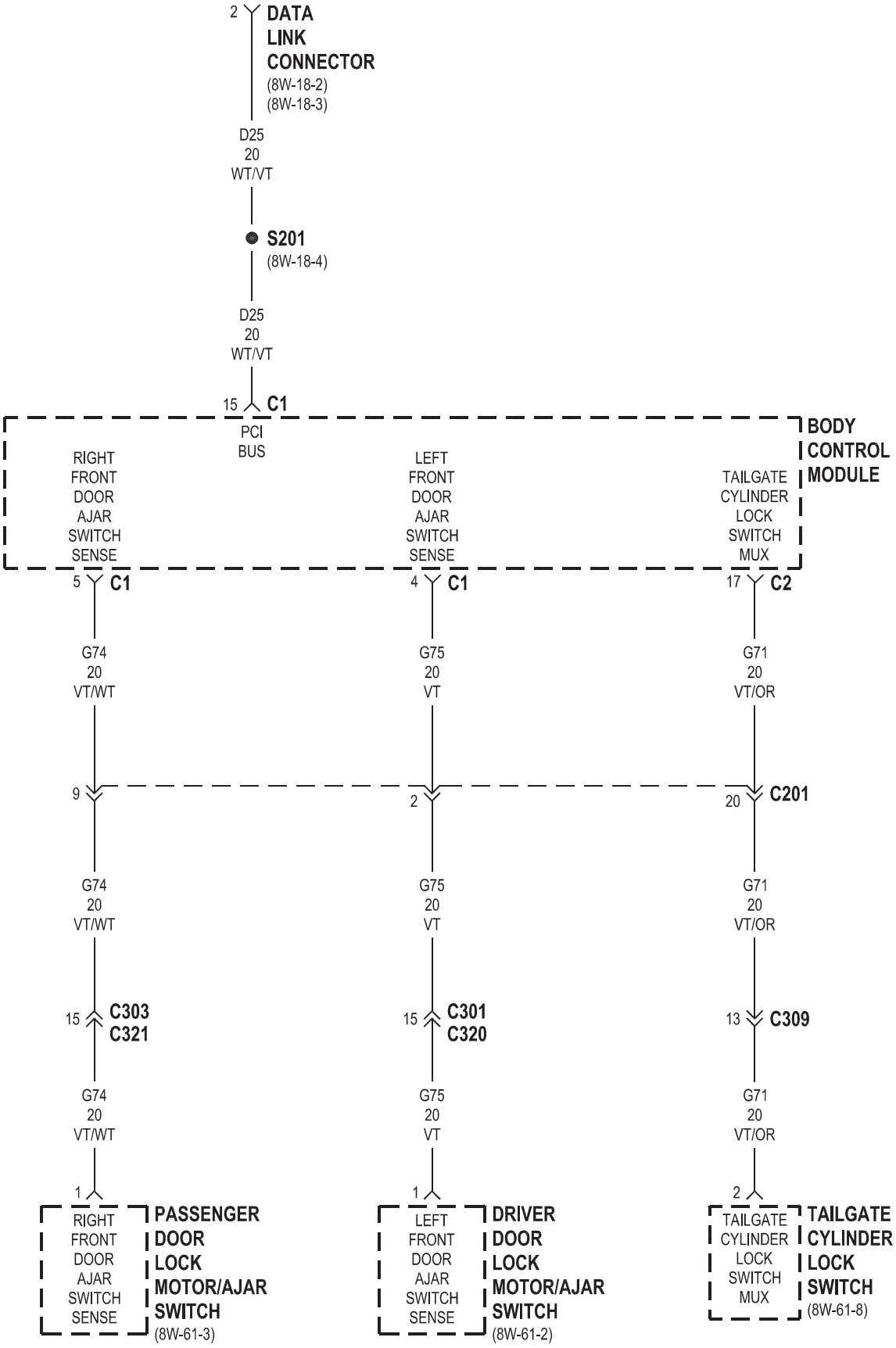

RHD EXCEPT BASE

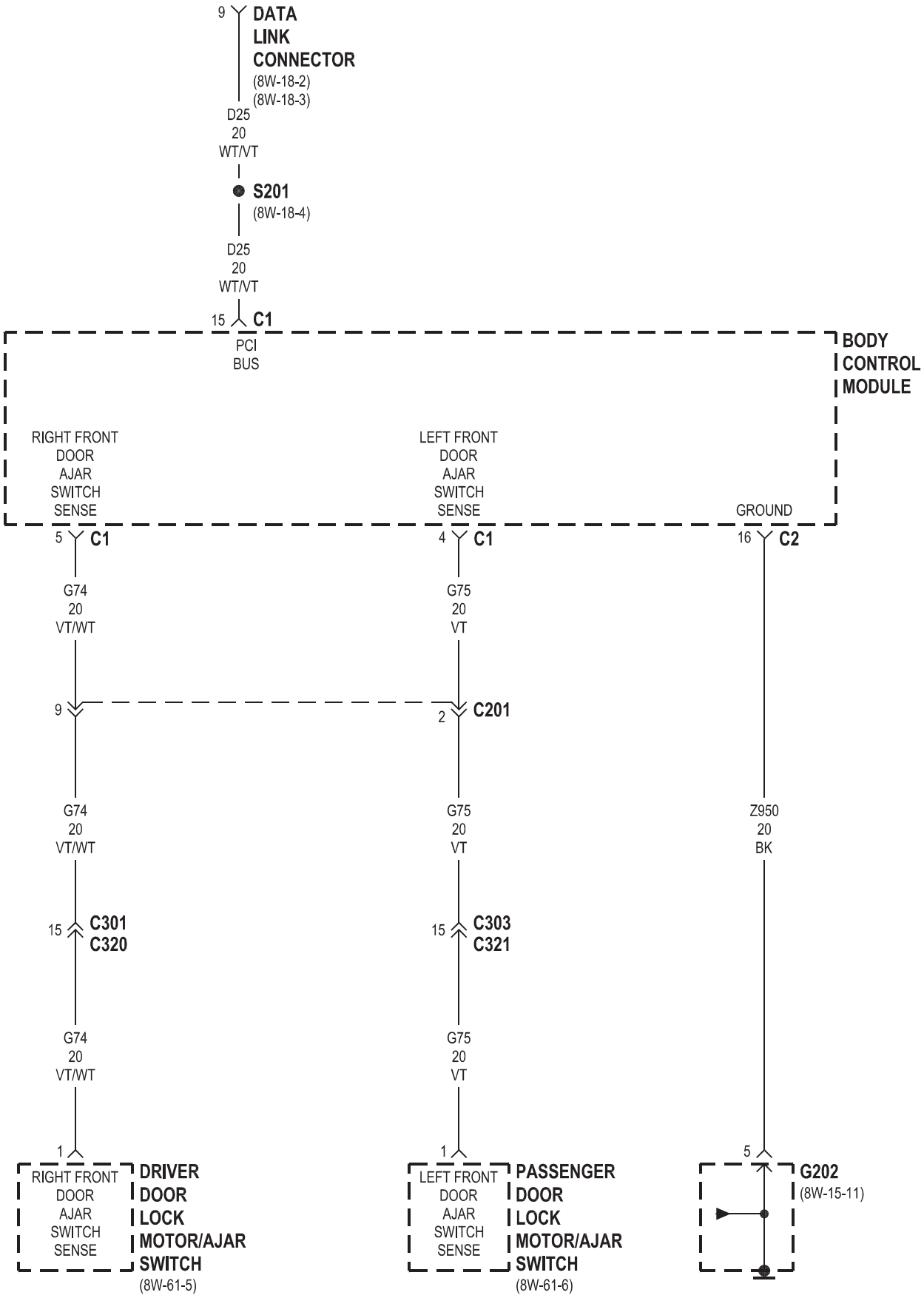

8W-47 AUDIO SYSTEM

Component	Page
Antenna	8W-47-2
Antenna Module	8W-47-2
Body Control Module	8W-47-5, 11
Cd Changer	8W-47-5
Clockspring	8W-47-11
Fuse 18	8W-47-6
Fuse 22	8W-47-2
Fuse 32	8W-47-2
Fuse 34	8W-47-2
G200	8W-47-7, 8
G301	8W-47-6
Instrument Cluster	8W-47-2
Junction Block	8W-47-2, 6
Left Front Door Speaker	8W-47-3, 4, 7, 8, 9, 10
Left Instrument Panel Speaker	8W-47-3, 7, 8
Left Rear Door Speaker	8W-47-9, 10
Left Remote Radio Switch	8W-47-11
Power Sunroof Relay	8W-47-2
Radio	8W-47-2, 3, 4, 5, 6, 7, 8, 9, 10, 11, 12
Radio Choke	8W-47-6, 7, 8
Right Front Door Speaker	8W-47-3, 4, 7, 8, 9, 10
Right Instrument Panel Speaker	8W-47-3, 7, 8
Right Rear Door Speaker	8W-47-9, 10
Right Remote Radio Switch	8W-47-11
Satellite Receiver	8W-47-12

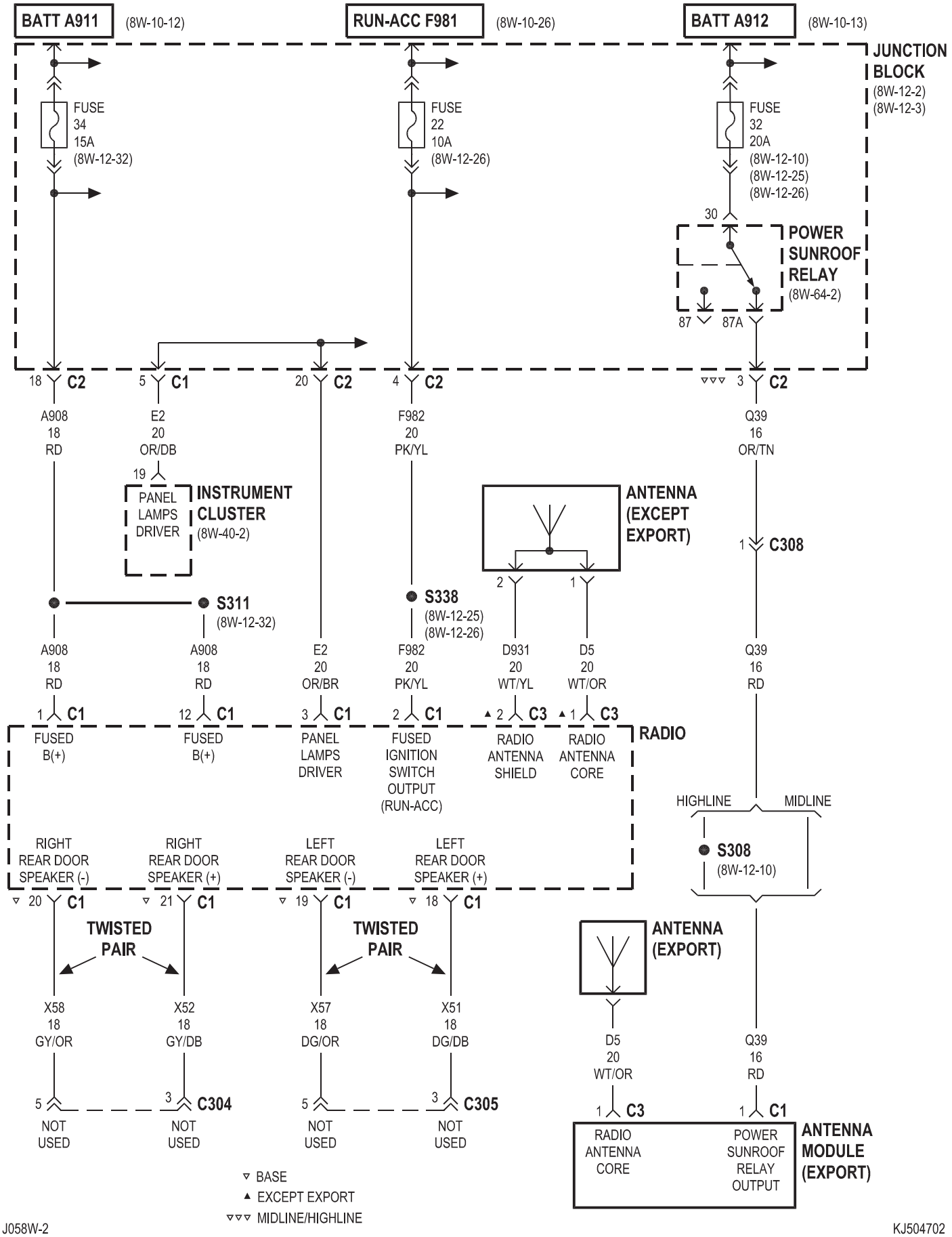
BATT A911
(8W-10-12)
RUN-ACC F981
(8W-10-26)
BATT A912
(8W-10-13)
JUNCTION BLOCK
(8W-12-2)
(8W-12-3)
FUSE 34 15A (8W-12-32)
FUSE 22 10A (8W-12-26)
FUSE 32 20A (8W-12-10) (8W-12-25) (8W-12-26)
30
POWER SUNROOF RELAY
(8W-64-2)
87
87A
18 C2
5 C1
20 C2
4 C2
3 C2
A908 18 RD
E2 20 OR/DB
F982 20 PK/YL
Q39 16 OR/TN
19
PANEL LAMPS DRIVER
INSTRUMENT CLUSTER
(8W-40-2)
ANTENNA (EXCEPT EXPORT)
1 C308
2
1
S311
(8W-12-32)
S338
(8W-12-25)
(8W-12-26)
A908 18 RD
A908 18 RD
E2 20 OR/BR
F982 20 PK/YL
D931 20 WT/YL
D5 20 WT/OR
Q39 16 RD
1 C1
12 C1
3 C1
2 C1
2 C3
1 C3
RADIO
FUSED B(+)
FUSED B(+)
PANEL LAMPS DRIVER
FUSED IGNITION SWITCH OUTPUT (RUN-ACC)
RADIO ANTENNA SHIELD
RADIO ANTENNA CORE
HIGHLINE
MIDLINE
S308
(8W-12-10)
RIGHT REAR DOOR SPEAKER (-)
RIGHT REAR DOOR SPEAKER (+)
LEFT REAR DOOR SPEAKER (-)
LEFT REAR DOOR SPEAKER (+)
20 C1
21 C1
19 C1
18 C1
TWISTED PAIR
TWISTED PAIR
ANTENNA (EXPORT)
X58 18 GY/OR
X52 18 GY/DB
X57 18 DG/OR
X51 18 DG/DB
D5 20 WT/OR
Q39 16 RD
5
3 C304
5
3 C305
1 C3
1 C1
NOT USED
NOT USED
NOT USED
NOT USED
RADIO ANTENNA CORE
POWER SUNROOF RELAY OUTPUT
ANTENNA MODULE (EXPORT)
BASE
EXCEPT EXPORT
MIDLINE/HIGHLINE

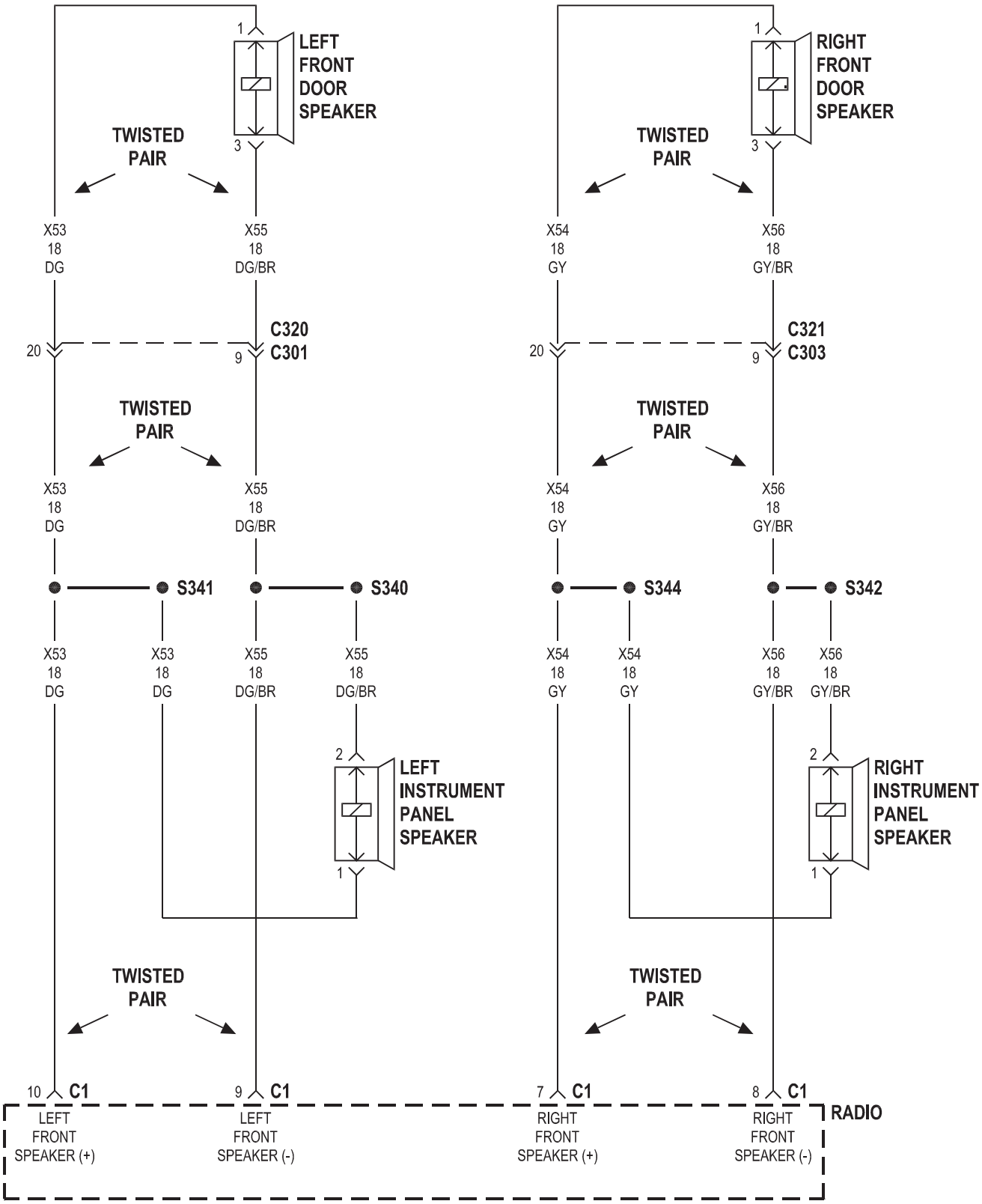
LEFT FRONT DOOR SPEAKER
RIGHT FRONT DOOR SPEAKER
TWISTED PAIR
X53 18 DG
X55 18 DG/BR
X54 18 GY
X56 18 GY/BR
C320 C301
C321 C303
S341
S340
S344
S342
X53 18 DG
X53 18 DG
X55 18 DG/BR
X55 18 DG/BR
X54 18 GY
X54 18 GY
X56 18 GY/BR
X56 18 GY/BR
LEFT INSTRUMENT PANEL SPEAKER
RIGHT INSTRUMENT PANEL SPEAKER
C1
LEFT FRONT SPEAKER (+)
LEFT FRONT SPEAKER (-)
RIGHT FRONT SPEAKER (+)
RIGHT FRONT SPEAKER (-)
RADIO

RHD BASE

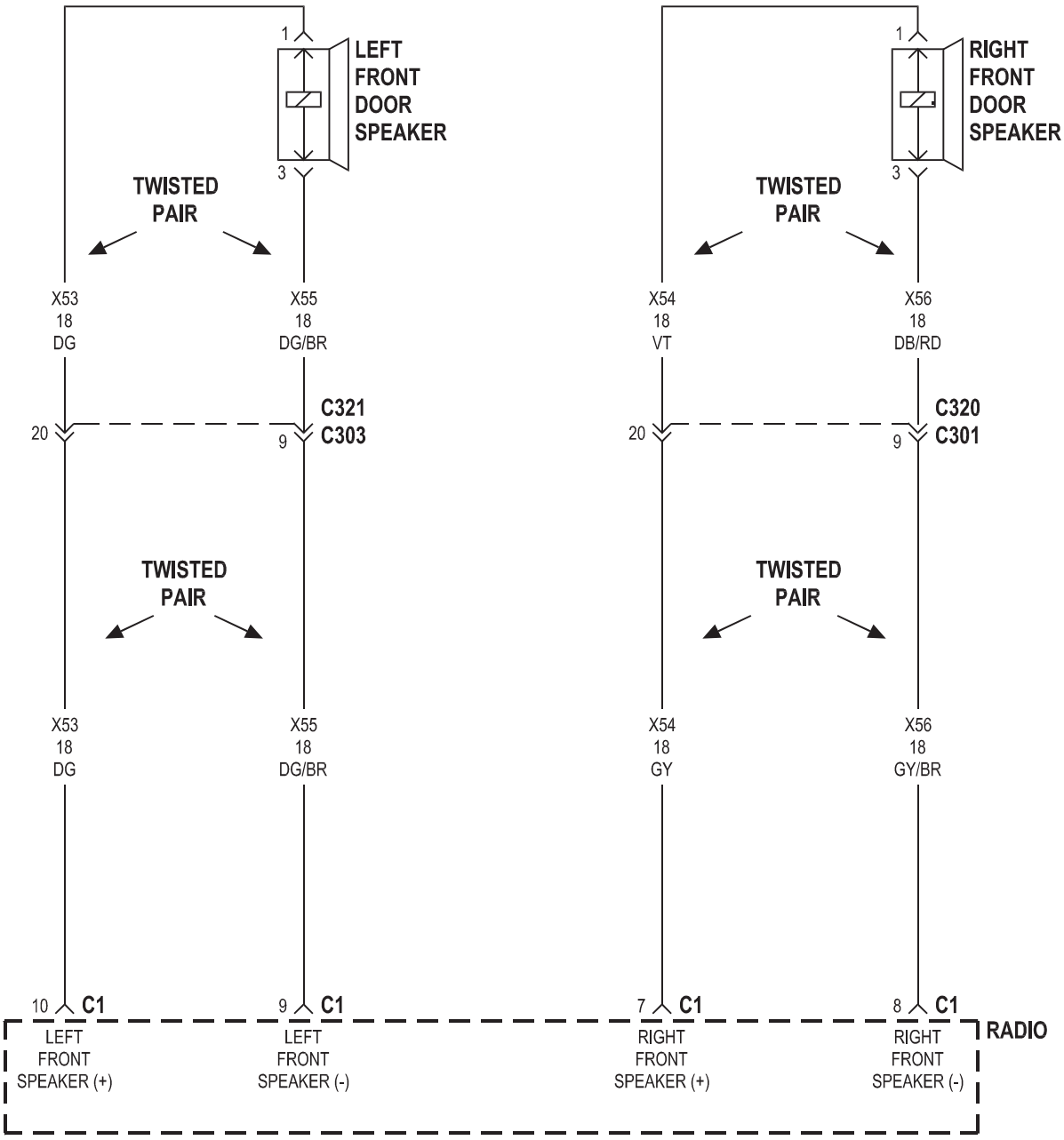
LEFT FRONT DOOR SPEAKER
RIGHT FRONT DOOR SPEAKER
1
3
TWISTED PAIR
X53 18 DG
X55 18 DG/BR
X54 18 VT
X56 18 DB/RD
20
9
C321 C303
C320 C301
X53 18 DG
X55 18 DG/BR
X54 18 GY
X56 18 GY/BR
10 C1
9 C1
7 C1
8 C1
LEFT FRONT SPEAKER (+)
LEFT FRONT SPEAKER (-)
RIGHT FRONT SPEAKER (+)
RIGHT FRONT SPEAKER (-)
RADIO

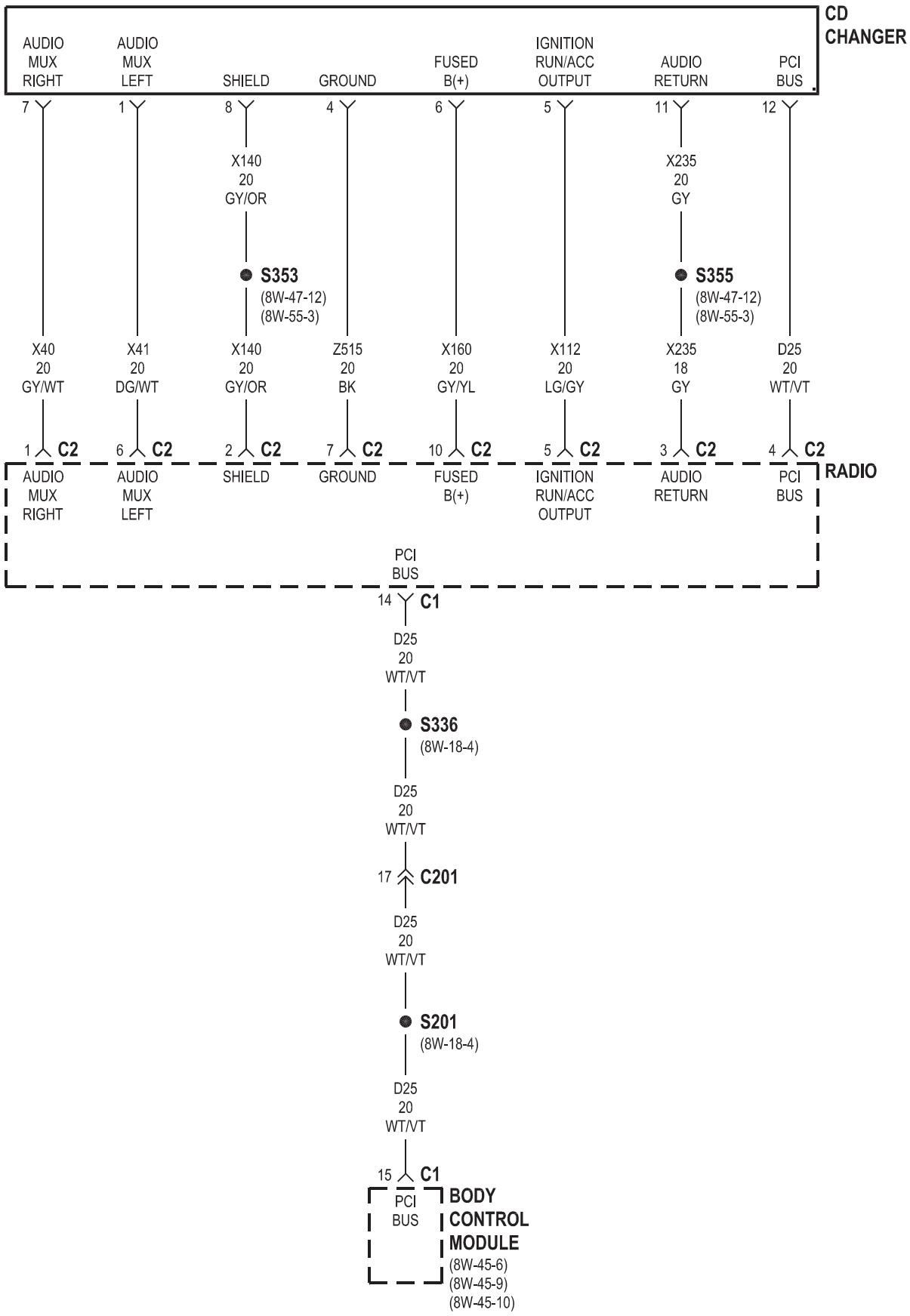
CD CHANGER
AUDIO MUX RIGHT
AUDIO MUX LEFT
SHIELD
GROUND
FUSED B(+)
IGNITION RUN/ACC OUTPUT
AUDIO RETURN
PCI BUS
7
1
8
4
6
5
11
12
X140 20 GY/OR
X235 20 GY
S353
(8W-47-12)
(8W-55-3)
S355
(8W-47-12)
(8W-55-3)
X40 20 GY/WT
X41 20 DG/WT
X140 20 GY/OR
Z515 20 BK
X160 20 GY/YL
X112 20 LG/GY
X235 18 GY
D25 20 WT/VT
1 C2
6 C2
2 C2
7 C2
10 C2
5 C2
3 C2
4 C2
RADIO
AUDIO MUX RIGHT
AUDIO MUX LEFT
SHIELD
GROUND
FUSED B(+)
IGNITION RUN/ACC OUTPUT
AUDIO RETURN
PCI BUS
PCI BUS
14 C1
D25 20 WT/VT
S336
(8W-18-4)
D25 20 WT/VT
17 C201
D25 20 WT/VT
S201
(8W-18-4)
D25 20 WT/VT
15 C1
PCI BUS
BODY CONTROL MODULE
(8W-45-6)
(8W-45-9)
(8W-45-10)

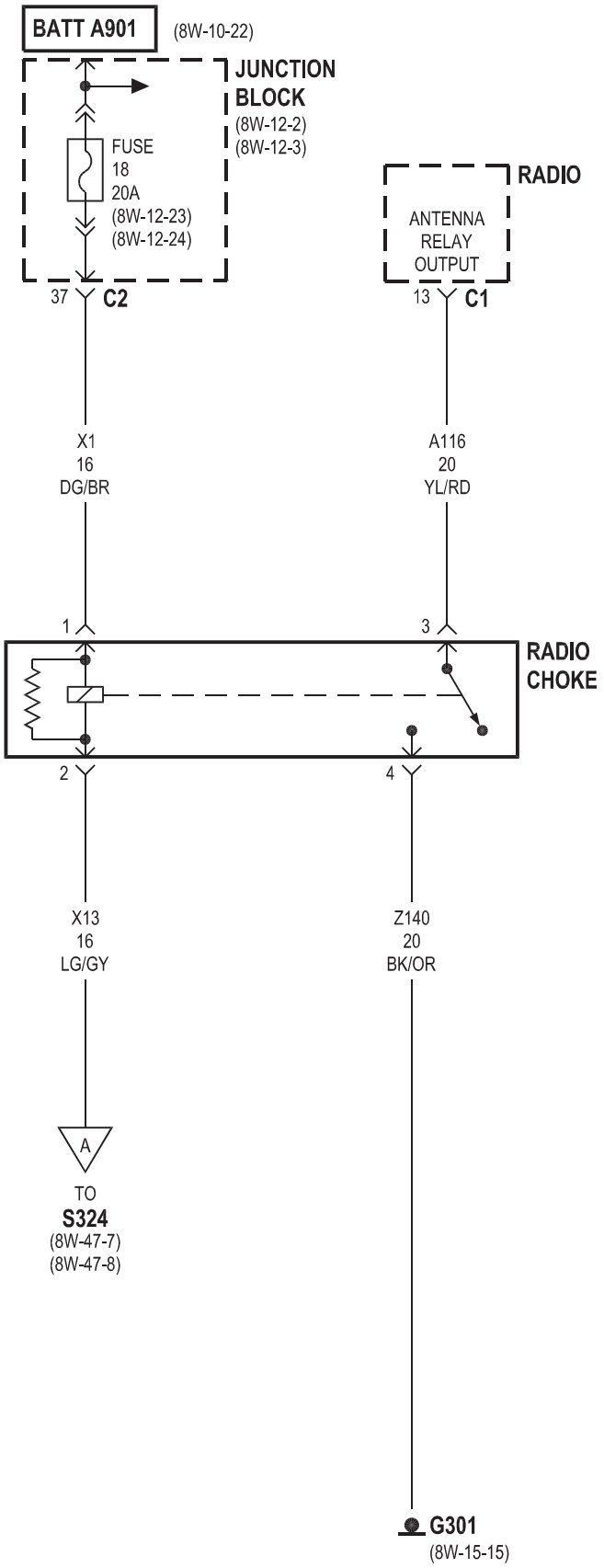
BATT A901
(8W-10-22)
JUNCTION BLOCK
(8W-12-2)
(8W-12-3)
FUSE
18
20A
(8W-12-23)
(8W-12-24)
RADIO
ANTENNA RELAY OUTPUT
37
C2
13
C1
X1
16
DG/BR
A116
20
YL/RD
1
3
RADIO CHOKE
2
4
X13
16
LG/GY
Z140
20
BK/OR
A
TO
S324
(8W-47-7)
(8W-47-8)
G301
(8W-15-15)

LHD PREMIUM

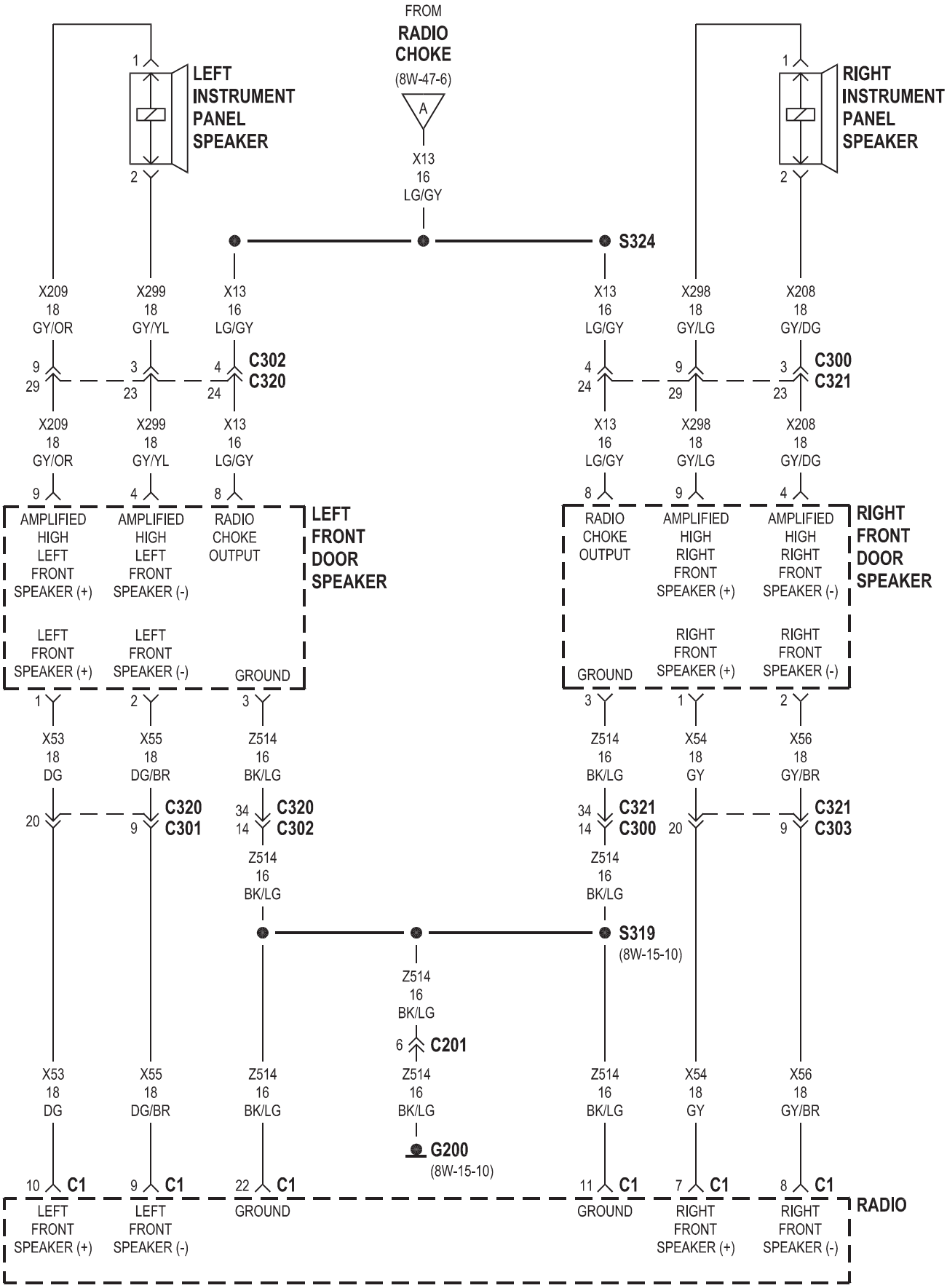
FROM
RADIO
CHOKE
(8W-47-6)
A
X13
16
LG/GY
LEFT
INSTRUMENT
PANEL
SPEAKER
RIGHT
INSTRUMENT
PANEL
SPEAKER
S324
X209
18
GY/OR
X299
18
GY/YL
X13
16
LG/GY
C302
C320
X298
18
GY/LG
X208
18
GY/DG
C300
C321
AMPLIFIED
HIGH
LEFT
FRONT
SPEAKER (+)
AMPLIFIED
HIGH
LEFT
FRONT
SPEAKER (-)
RADIO
CHOKE
OUTPUT
LEFT
FRONT
DOOR
SPEAKER
AMPLIFIED
HIGH
RIGHT
FRONT
SPEAKER (+)
AMPLIFIED
HIGH
RIGHT
FRONT
SPEAKER (-)
RIGHT
FRONT
DOOR
SPEAKER
LEFT
FRONT
SPEAKER (+)
LEFT
FRONT
SPEAKER (-)
GROUND
RIGHT
FRONT
SPEAKER (+)
RIGHT
FRONT
SPEAKER (-)
X53
18
DG
X55
18
DG/BR
Z514
16
BK/LG
C320
C301
C320
C302
X54
18
GY
X56
18
GY/BR
C321
C300
C321
C303
S319
(8W-15-10)
C201
G200
(8W-15-10)
C1
LEFT
FRONT
SPEAKER (+)
LEFT
FRONT
SPEAKER (-)
GROUND
RIGHT
FRONT
SPEAKER (+)
RIGHT
FRONT
SPEAKER (-)
RADIO

RHD PREMIUM

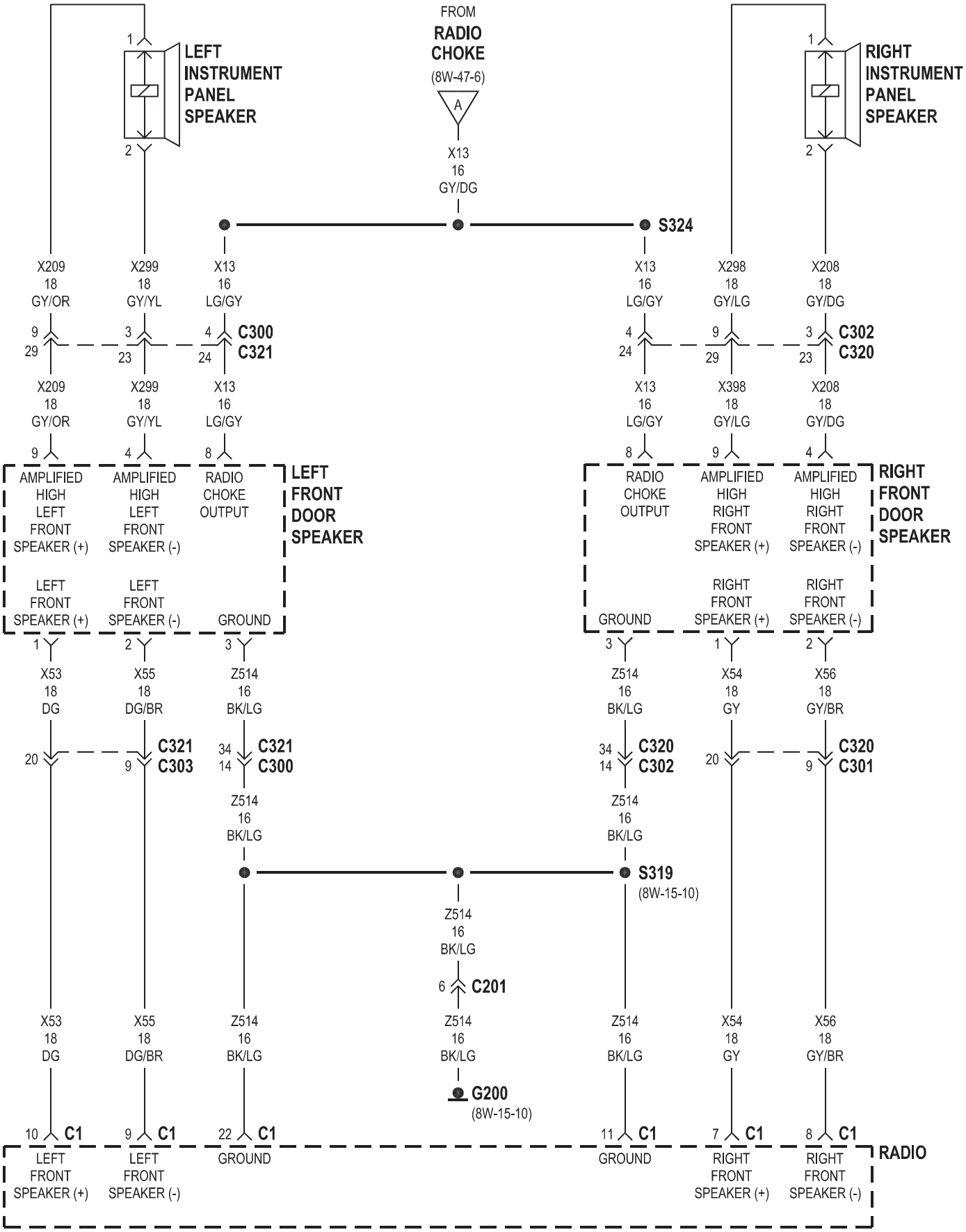
FROM
RADIO
CHOKE
(8W-47-6)
A
X13
16
GY/DG
S324
LEFT
INSTRUMENT
PANEL
SPEAKER
RIGHT
INSTRUMENT
PANEL
SPEAKER
X209
18
GY/OR
X299
18
GY/YL
X13
16
LG/GY
C300
C321
X13
16
LG/GY
X298
18
GY/LG
X208
18
GY/DG
C302
C320
X209
18
GY/OR
X299
18
GY/YL
X13
16
LG/GY
X13
16
LG/GY
X398
18
GY/LG
X208
18
GY/DG
AMPLIFIED
HIGH
LEFT
FRONT
SPEAKER (+)
AMPLIFIED
HIGH
LEFT
FRONT
SPEAKER (-)
RADIO
CHOKE
OUTPUT
LEFT
FRONT
DOOR
SPEAKER
RADIO
CHOKE
OUTPUT
AMPLIFIED
HIGH
RIGHT
FRONT
SPEAKER (+)
AMPLIFIED
HIGH
RIGHT
FRONT
SPEAKER (-)
RIGHT
FRONT
DOOR
SPEAKER
LEFT
FRONT
SPEAKER (+)
LEFT
FRONT
SPEAKER (-)
GROUND
GROUND
RIGHT
FRONT
SPEAKER (+)
RIGHT
FRONT
SPEAKER (-)
X53
18
DG
X55
18
DG/BR
Z514
16
BK/LG
Z514
16
BK/LG
X54
18
GY
X56
18
GY/BR
C321
C303
C321
C300
C320
C302
C320
C301
Z514
16
BK/LG
Z514
16
BK/LG
S319
(8W-15-10)
Z514
16
BK/LG
C201
X53
18
DG
X55
18
DG/BR
Z514
16
BK/LG
Z514
16
BK/LG
Z514
16
BK/LG
X54
18
GY
X56
18
GY/BR
G200
(8W-15-10)
C1
C1
C1
C1
C1
C1
LEFT
FRONT
SPEAKER (+)
LEFT
FRONT
SPEAKER (-)
GROUND
GROUND
RIGHT
FRONT
SPEAKER (+)
RIGHT
FRONT
SPEAKER (-)
RADIO

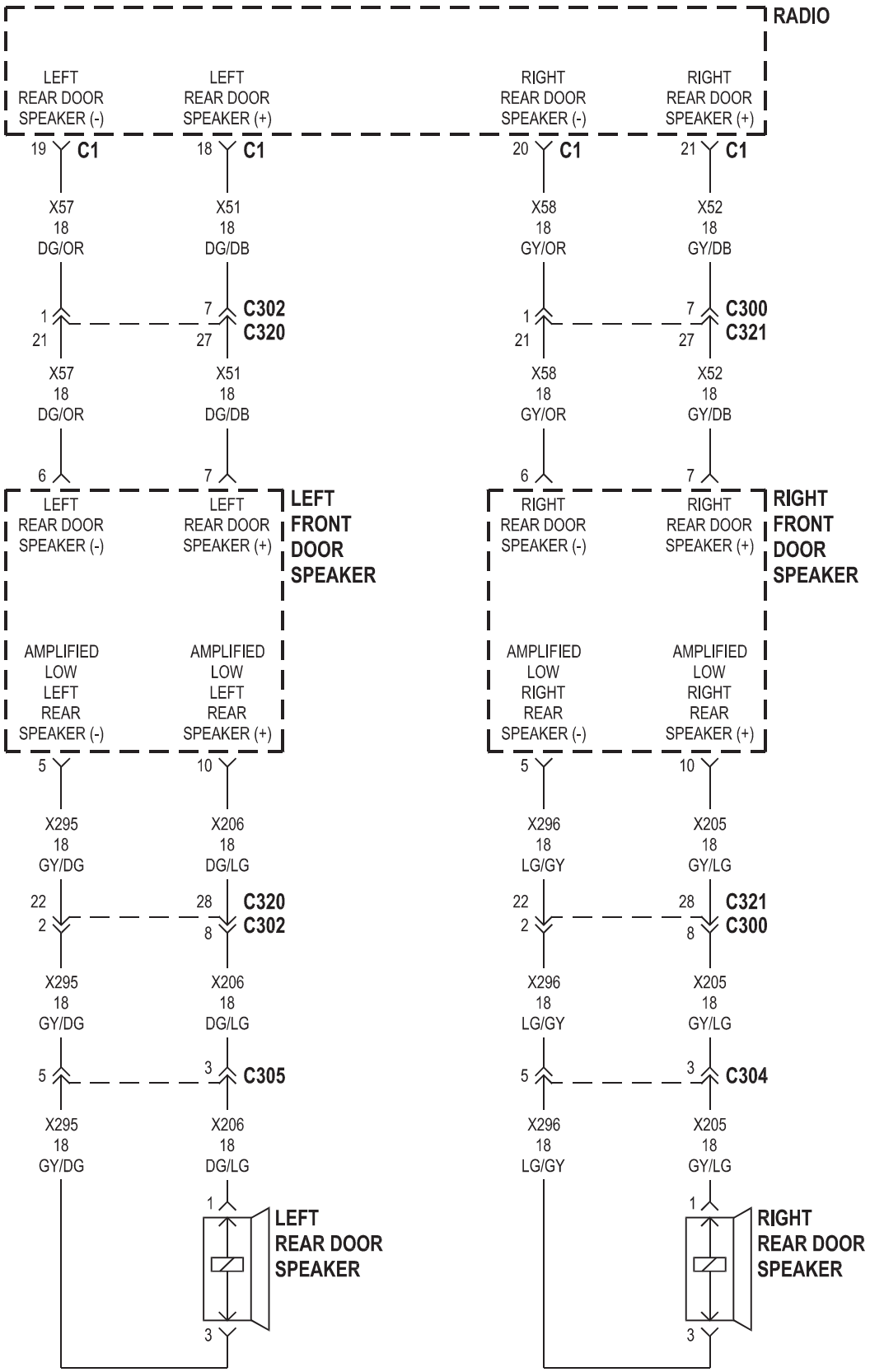
RADIO
LEFT REAR DOOR SPEAKER (-)
LEFT REAR DOOR SPEAKER (+)
RIGHT REAR DOOR SPEAKER (-)
RIGHT REAR DOOR SPEAKER (+)
19 C1
18 C1
20 C1
21 C1
X57 18 DG/OR
X51 18 DG/DB
X58 18 GY/OR
X52 18 GY/DB
1 21 7 27 C302 C320
1 21 7 27 C300 C321
X57 18 DG/OR
X51 18 DG/DB
X58 18 GY/OR
X52 18 GY/DB
6 7 6 7
LEFT REAR DOOR SPEAKER (-)
LEFT REAR DOOR SPEAKER (+)
LEFT FRONT DOOR SPEAKER
RIGHT REAR DOOR SPEAKER (-)
RIGHT REAR DOOR SPEAKER (+)
RIGHT FRONT DOOR SPEAKER
AMPLIFIED LOW LEFT REAR SPEAKER (-)
AMPLIFIED LOW LEFT REAR SPEAKER (+)
AMPLIFIED LOW RIGHT REAR SPEAKER (-)
AMPLIFIED LOW RIGHT REAR SPEAKER (+)
5 10 5 10
X295 18 GY/DG
X206 18 DG/LG
X296 18 LG/GY
X205 18 GY/LG
22 2 28 8 C320 C302
22 2 28 8 C321 C300
X295 18 GY/DG
X206 18 DG/LG
X296 18 LG/GY
X205 18 GY/LG
5 3 C305
5 3 C304
X295 18 GY/DG
X206 18 DG/LG
X296 18 LG/GY
X205 18 GY/LG
1 3 LEFT REAR DOOR SPEAKER
1 3 RIGHT REAR DOOR SPEAKER

RHD PREMIUM

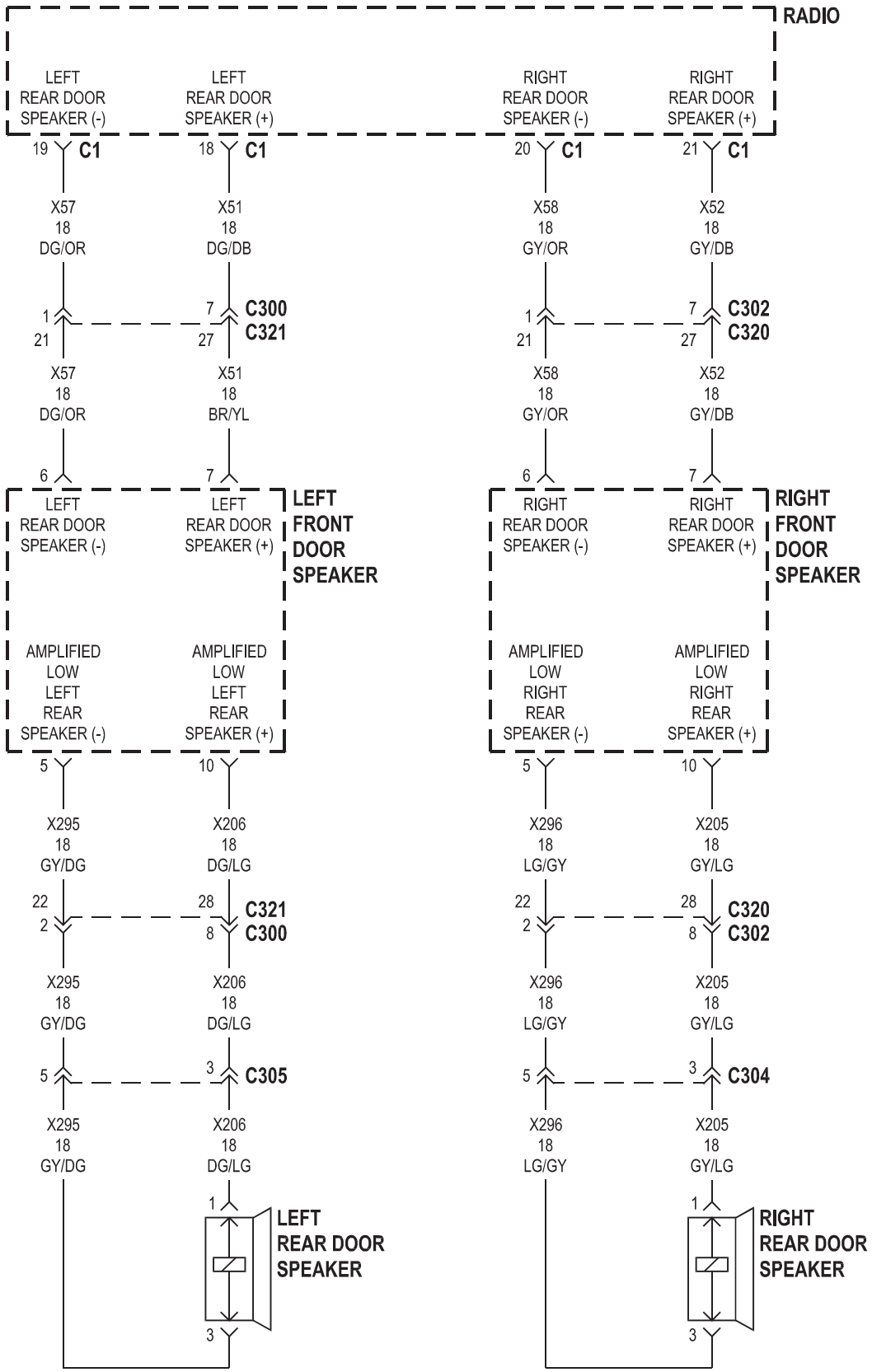
RADIO
LEFT REAR DOOR SPEAKER (-)
LEFT REAR DOOR SPEAKER (+)
RIGHT REAR DOOR SPEAKER (-)
RIGHT REAR DOOR SPEAKER (+)
19 C1
18 C1
20 C1
21 C1
X57 18 DG/OR
X51 18 DG/DB
X58 18 GY/OR
X52 18 GY/DB
1 21 7 27 C300 C321
1 21 7 27 C302 C320
X57 18 DG/OR
X51 18 BR/YL
X58 18 GY/OR
X52 18 GY/DB
6 7
6 7
LEFT REAR DOOR SPEAKER (-)
LEFT REAR DOOR SPEAKER (+)
LEFT FRONT DOOR SPEAKER
RIGHT REAR DOOR SPEAKER (-)
RIGHT REAR DOOR SPEAKER (+)
RIGHT FRONT DOOR SPEAKER
AMPLIFIED LOW LEFT REAR SPEAKER (-)
AMPLIFIED LOW LEFT REAR SPEAKER (+)
AMPLIFIED LOW RIGHT REAR SPEAKER (-)
AMPLIFIED LOW RIGHT REAR SPEAKER (+)
5 10
5 10
X295 18 GY/DG
X206 18 DG/LG
X296 18 LG/GY
X205 18 GY/LG
22 2 28 8 C321 C300
22 2 28 8 C320 C302
X295 18 GY/DG
X206 18 DG/LG
X296 18 LG/GY
X205 18 GY/LG
5 3 C305
5 3 C304
X295 18 GY/DG
X206 18 DG/LG
X296 18 LG/GY
X205 18 GY/LG
1 3 LEFT REAR DOOR SPEAKER
1 3 RIGHT REAR DOOR SPEAKER

PREMIUM

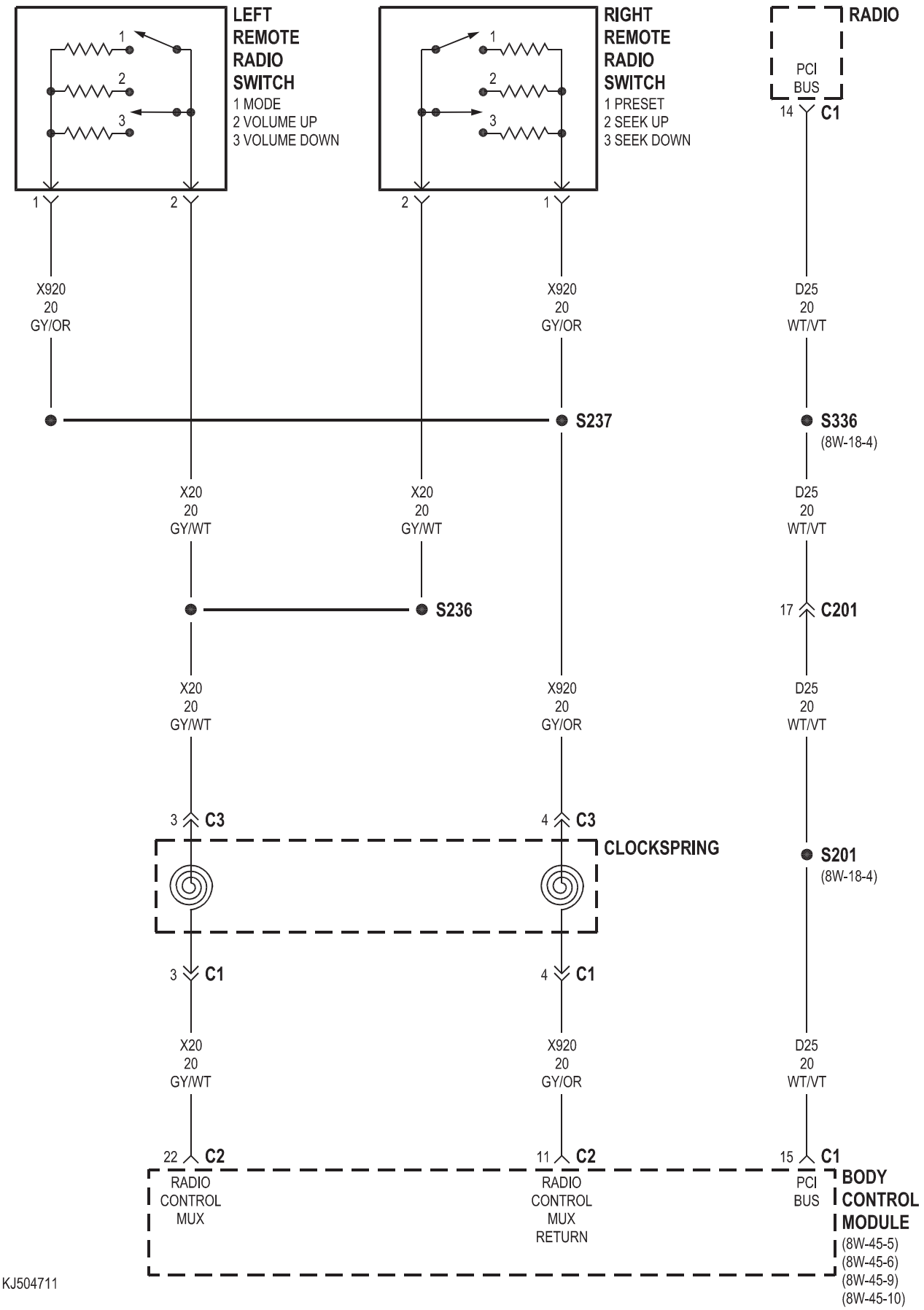

KJ504711

J058W-2

SATELLITE RADIO

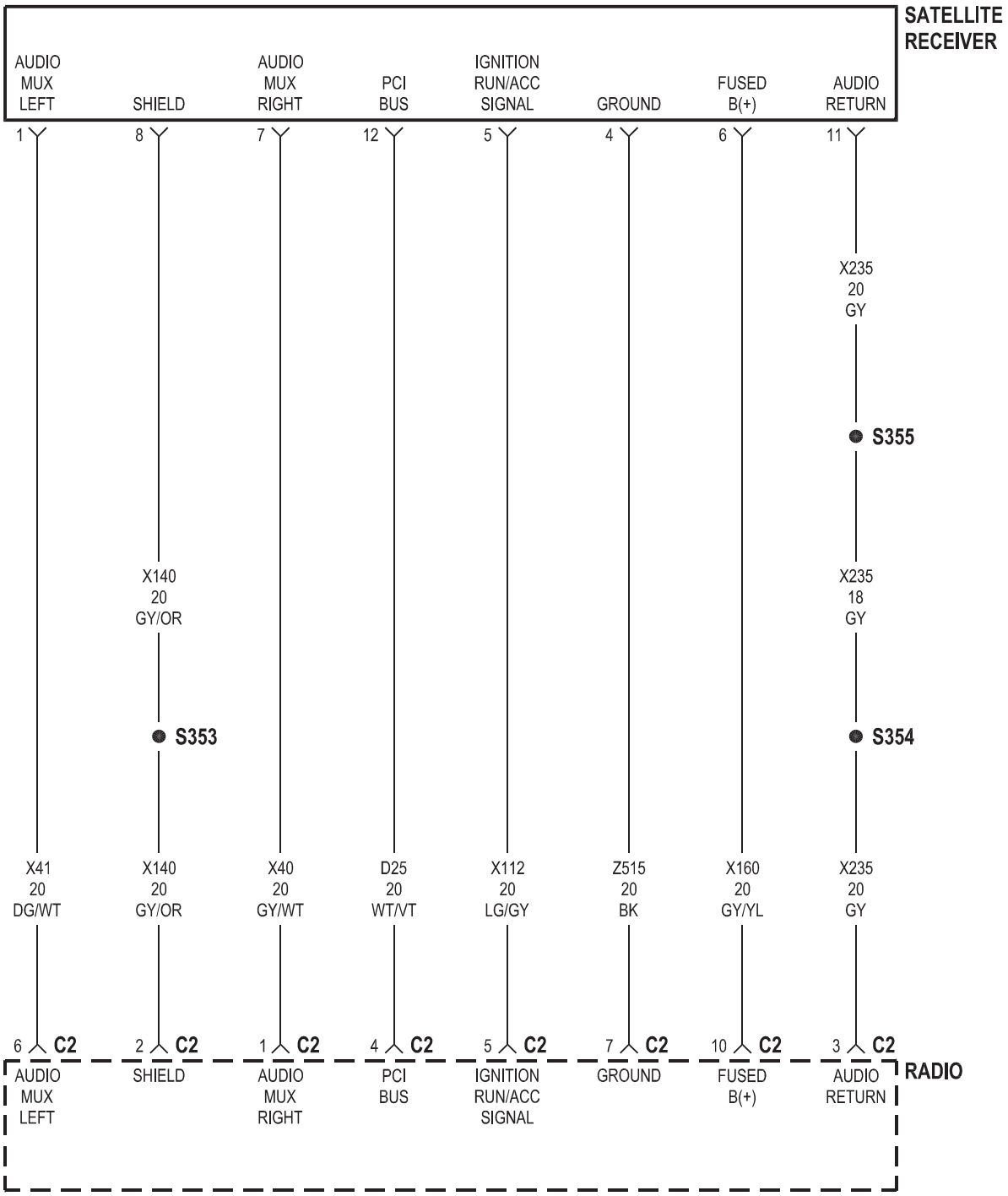

8W-48 REAR WINDOW DEFOGGER

Component	Page
A/C-Heater Control	8W-48-2
Body Control Module	8W-48-2
Defogger Relay	8W-48-2
Fuse 30	8W-48-2
Fuse 39	8W-48-2
G303	8W-48-2
G304	8W-48-2
Hazard Switch/Combination Flasher	8W-48-2
Junction Block	8W-48-2
Liftgate Glass	8W-48-2

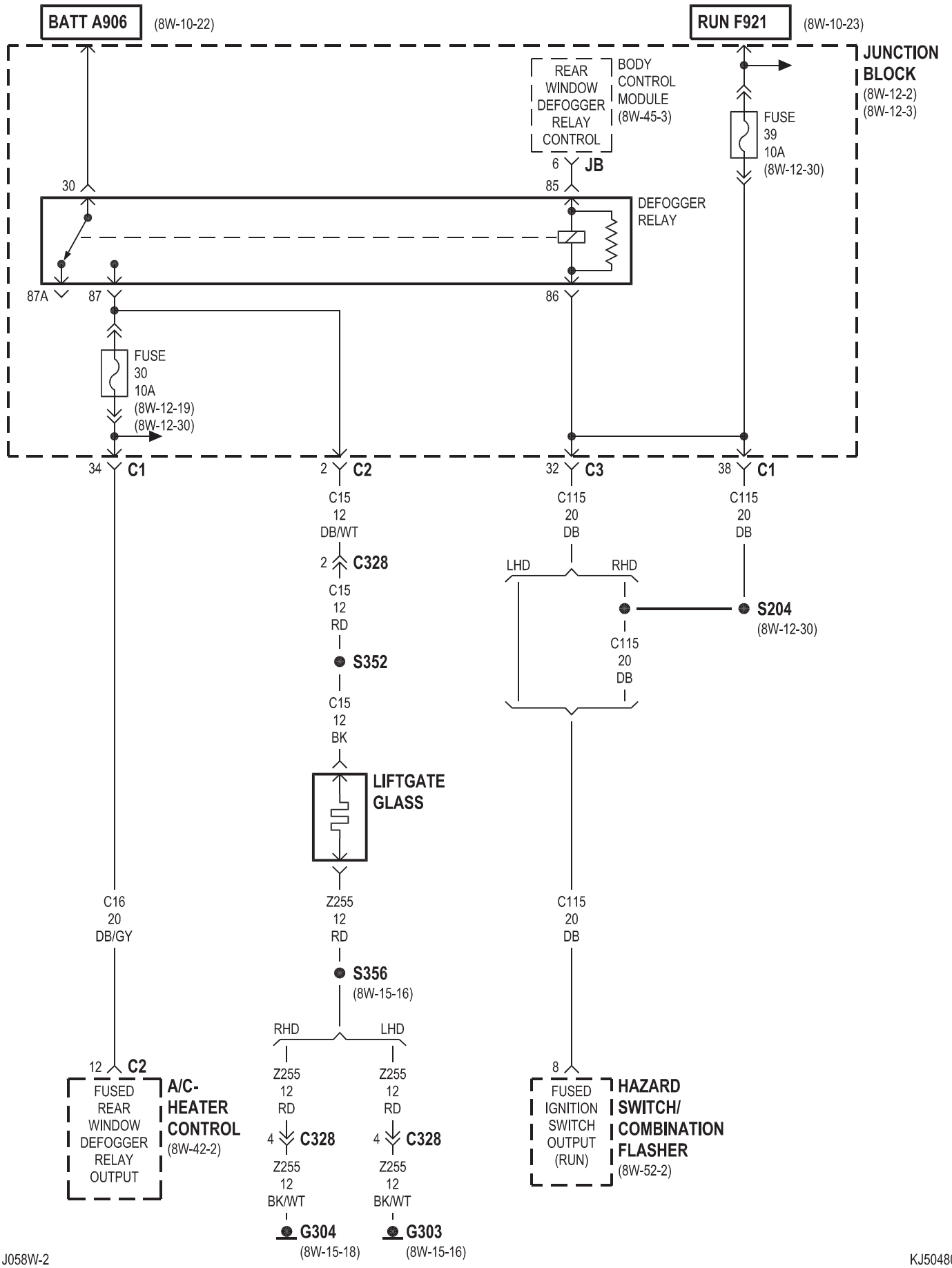
BATT A906
(8W-10-22)
RUN F921
(8W-10-23)
JUNCTION BLOCK
(8W-12-2)
(8W-12-3)
REAR WINDOW DEFOGGER RELAY CONTROL
BODY CONTROL MODULE
(8W-45-3)
FUSE 39 10A
(8W-12-30)
6
JB
30
85
DEFOGGER RELAY
87A
87
86
FUSE 30 10A
(8W-12-19)
(8W-12-30)
34
C1
2
C2
32
C3
38
C1
C15 12 DB/WT
C115 20 DB
C115 20 DB
2
C328
LHD
RHD
S204
(8W-12-30)
C15 12 RD
C115 20 DB
S352
C15 12 BK
LIFTGATE GLASS
C16 20 DB/GY
Z255 12 RD
C115 20 DB
S356
(8W-15-16)
RHD
LHD
12
C2
Z255 12 RD
Z255 12 RD
8
FUSED REAR WINDOW DEFOGGER RELAY OUTPUT
A/C-HEATER CONTROL
(8W-42-2)
4
C328
4
C328
FUSED IGNITION SWITCH OUTPUT (RUN)
HAZARD SWITCH/ COMBINATION FLASHER
(8W-52-2)
Z255 12 BK/WT
Z255 12 BK/WT
G304
(8W-15-18)
G303
(8W-15-16)

8W-49 OVERHEAD CONSOLE

Component	Page
Automatic Day/Night Mirror	8W-49-2, 3, 4
Back-Up Lamp Switch	8W-49-3
Compass Mini-Trip Computer	8W-49-2
Data Link Connector	8W-49-2
Driver Power Mirror	8W-49-3
Fuse 13	8W-49-2, 3, 4
Fuse 34	8W-49-2, 4
Fuse 38	8W-49-5
G111	8W-49-4
G113	8W-49-5
G202	8W-49-4
G303	8W-49-2, 3
G304	8W-49-6
Hands Free Module	8W-49-3, 4
Intrusion Transceiver Module	8W-49-2, 4
Junction Block	8W-49-2, 3, 4, 5
Siren	8W-49-4
Transmission Range Sensor	8W-49-3
Transmission Solenoid/TRS Assembly	8W-49-3
Transponder-Tire Pressure-Left Front	8W-49-5
Transponder-Tire Pressure-Right Front	8W-49-5
Transponder-Tire Pressure-Right Rear	8W-49-6

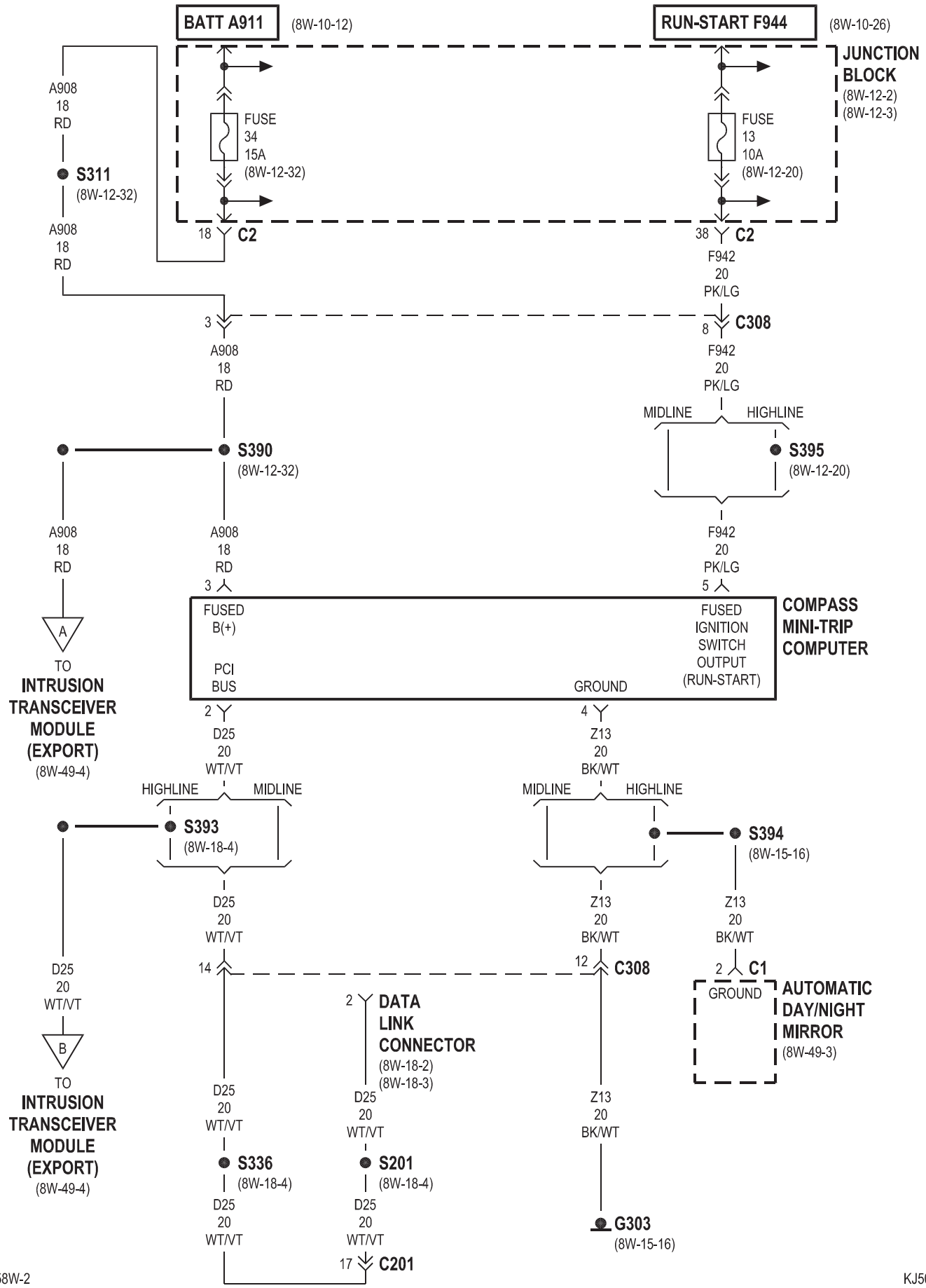
BATT A911
(8W-10-12)
RUN-START F944
(8W-10-26)
JUNCTION BLOCK
(8W-12-2)
(8W-12-3)
FUSE 34 15A
(8W-12-32)
FUSE 13 10A
(8W-12-20)
A908 18 RD
S311
(8W-12-32)
18 C2
38 C2
F942 20 PK/LG
3
8 C308
S390
(8W-12-32)
MIDLINE
HIGHLINE
S395
(8W-12-20)
FUSED B(+)
PCI BUS
FUSED IGNITION SWITCH OUTPUT (RUN-START)
GROUND
COMPASS MINI-TRIP COMPUTER
TO INTRUSION TRANSCEIVER MODULE (EXPORT)
(8W-49-4)
D25 20 WT/VT
Z13 20 BK/WT
S393
(8W-18-4)
S394
(8W-15-16)
14
12 C308
2 C1
AUTOMATIC DAY/NIGHT MIRROR
(8W-49-3)
2 DATA LINK CONNECTOR
(8W-18-2)
(8W-18-3)
S336
(8W-18-4)
S201
(8W-18-4)
17 C201
G303
(8W-15-16)

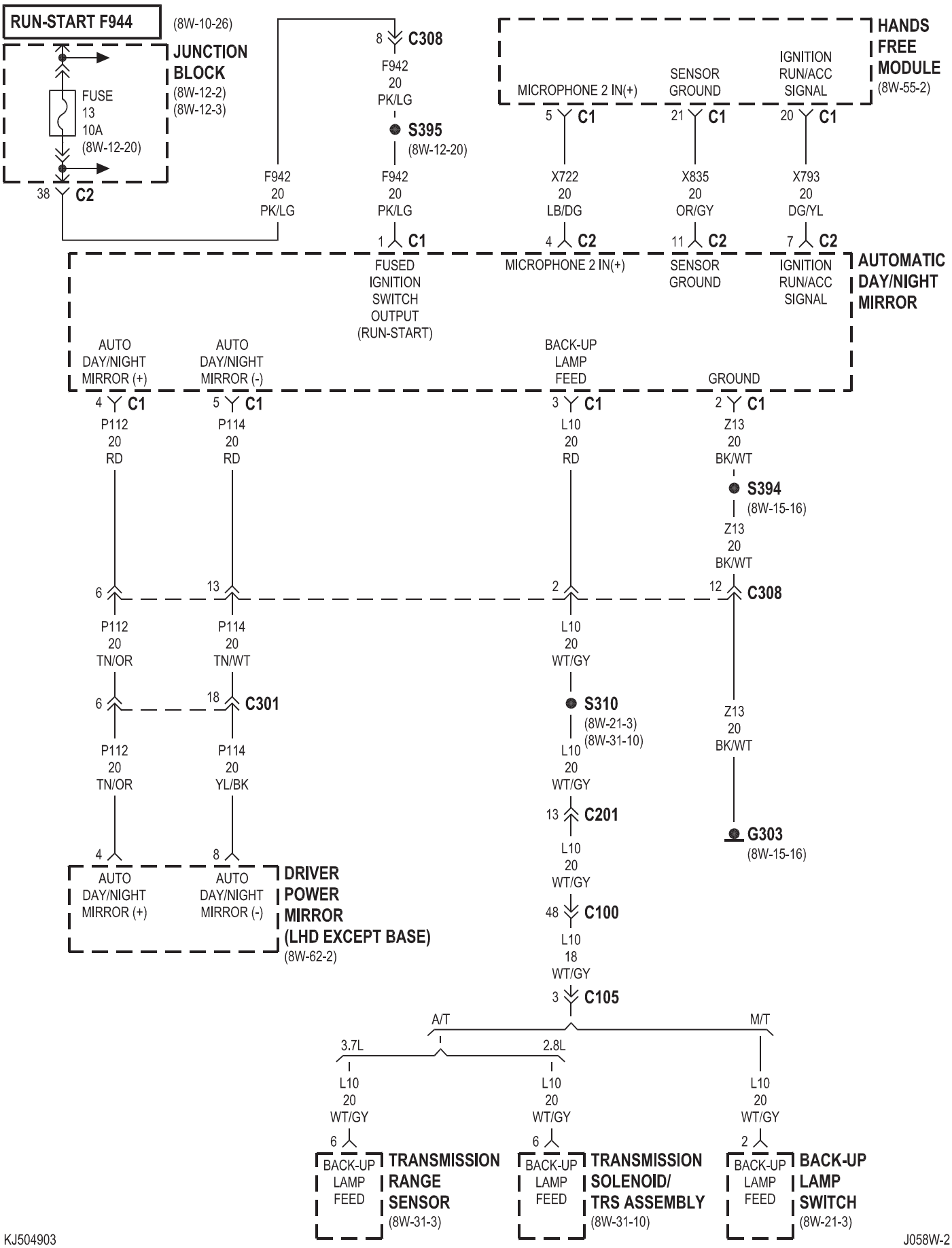
RUN-START F944
(8W-10-26)
JUNCTION BLOCK
(8W-12-2)
(8W-12-3)
FUSE 13 10A
(8W-12-20)
38 C2
F942 20 PK/LG
8 C308
F942 20 PK/LG
S395
(8W-12-20)
F942 20 PK/LG
1 C1
FUSED IGNITION SWITCH OUTPUT (RUN-START)
HANDS FREE MODULE
(8W-55-2)
MICROPHONE 2 IN(+)
SENSOR GROUND
IGNITION RUN/ACC SIGNAL
5 C1
21 C1
20 C1
X722 20 LB/DG
X835 20 OR/GY
X793 20 DG/YL
4 C2
11 C2
7 C2
MICROPHONE 2 IN(+)
SENSOR GROUND
IGNITION RUN/ACC SIGNAL
AUTOMATIC DAY/NIGHT MIRROR
AUTO DAY/NIGHT MIRROR (+)
AUTO DAY/NIGHT MIRROR (-)
BACK-UP LAMP FEED
GROUND
4 C1
5 C1
3 C1
2 C1
P112 20 RD
P114 20 RD
L10 20 RD
Z13 20 BK/WT
S394
(8W-15-16)
Z13 20 BK/WT
6
13
2
12 C308
P112 20 TN/OR
P114 20 TN/WT
L10 20 WT/GY
6
18 C301
S310
(8W-21-3)
(8W-31-10)
Z13 20 BK/WT
P112 20 TN/OR
P114 20 YL/BK
L10 20 WT/GY
13 C201
G303
(8W-15-16)
4
8
AUTO DAY/NIGHT MIRROR (+)
AUTO DAY/NIGHT MIRROR (-)
DRIVER POWER MIRROR (LHD EXCEPT BASE)
(8W-62-2)
L10 20 WT/GY
48 C100
L10 18 WT/GY
3 C105
A/T
M/T
3.7L
2.8L
L10 20 WT/GY
L10 20 WT/GY
L10 20 WT/GY
6
6
2
BACK-UP LAMP FEED
TRANSMISSION RANGE SENSOR
(8W-31-3)
BACK-UP LAMP FEED
TRANSMISSION SOLENOID/ TRS ASSEMBLY
(8W-31-10)
BACK-UP LAMP FEED
BACK-UP LAMP SWITCH
(8W-21-3)

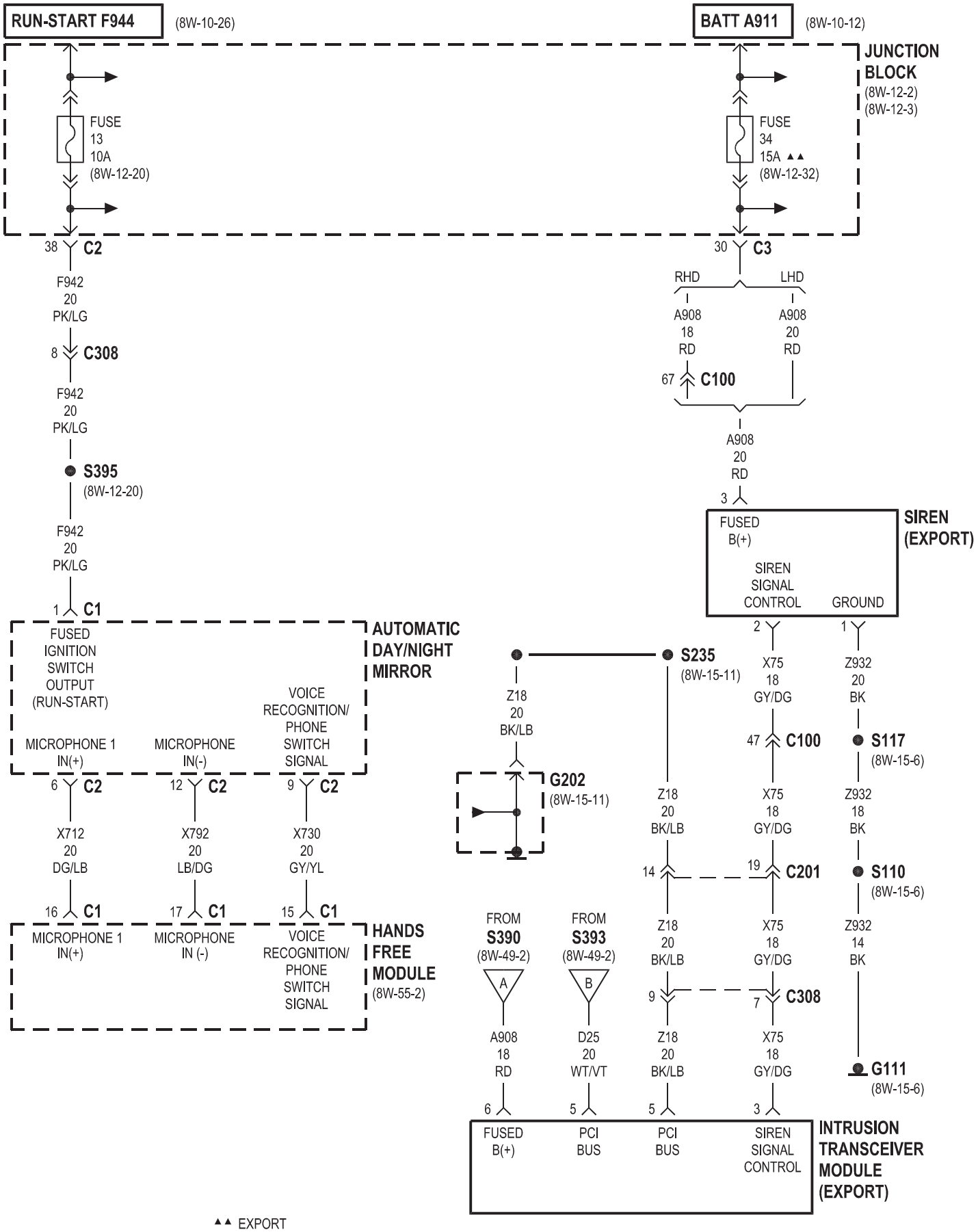
RUN-START F944
(8W-10-26)
BATT A911
(8W-10-12)
JUNCTION BLOCK
(8W-12-2)
(8W-12-3)
FUSE 13 10A (8W-12-20)
FUSE 34 15A ▲▲ (8W-12-32)
38 C2
30 C3
F942 20 PK/LG
8 C308
F942 20 PK/LG
S395
(8W-12-20)
F942 20 PK/LG
1 C1
RHD
LHD
A908 18 RD
A908 20 RD
67 C100
A908 20 RD
3
SIREN (EXPORT)
FUSED B(+)
SIREN SIGNAL CONTROL
GROUND
2
1
AUTOMATIC DAY/NIGHT MIRROR
FUSED IGNITION SWITCH OUTPUT (RUN-START)
MICROPHONE 1 IN(+)
MICROPHONE IN(-)
VOICE RECOGNITION/ PHONE SWITCH SIGNAL
S235
(8W-15-11)
Z18 20 BK/LB
G202
(8W-15-11)
X75 18 GY/DG
Z932 20 BK
47 C100
S117
(8W-15-6)
6 C2
12 C2
9 C2
X712 20 DG/LB
X792 20 LB/DG
X730 20 GY/YL
Z18 20 BK/LB
X75 18 GY/DG
Z932 18 BK
14
19 C201
S110
(8W-15-6)
16 C1
17 C1
15 C1
MICROPHONE 1 IN(+)
MICROPHONE IN (-)
VOICE RECOGNITION/ PHONE SWITCH SIGNAL
HANDS FREE MODULE
(8W-55-2)
FROM S390
(8W-49-2)
FROM S393
(8W-49-2)
A
B
Z18 20 BK/LB
X75 18 GY/DG
Z932 14 BK
9
7 C308
A908 18 RD
D25 20 WT/VT
Z18 20 BK/LB
X75 18 GY/DG
G111
(8W-15-6)
6
5
5
3
FUSED B(+)
PCI BUS
PCI BUS
SIREN SIGNAL CONTROL
INTRUSION TRANSCEIVER MODULE (EXPORT)

▲▲ EXPORT

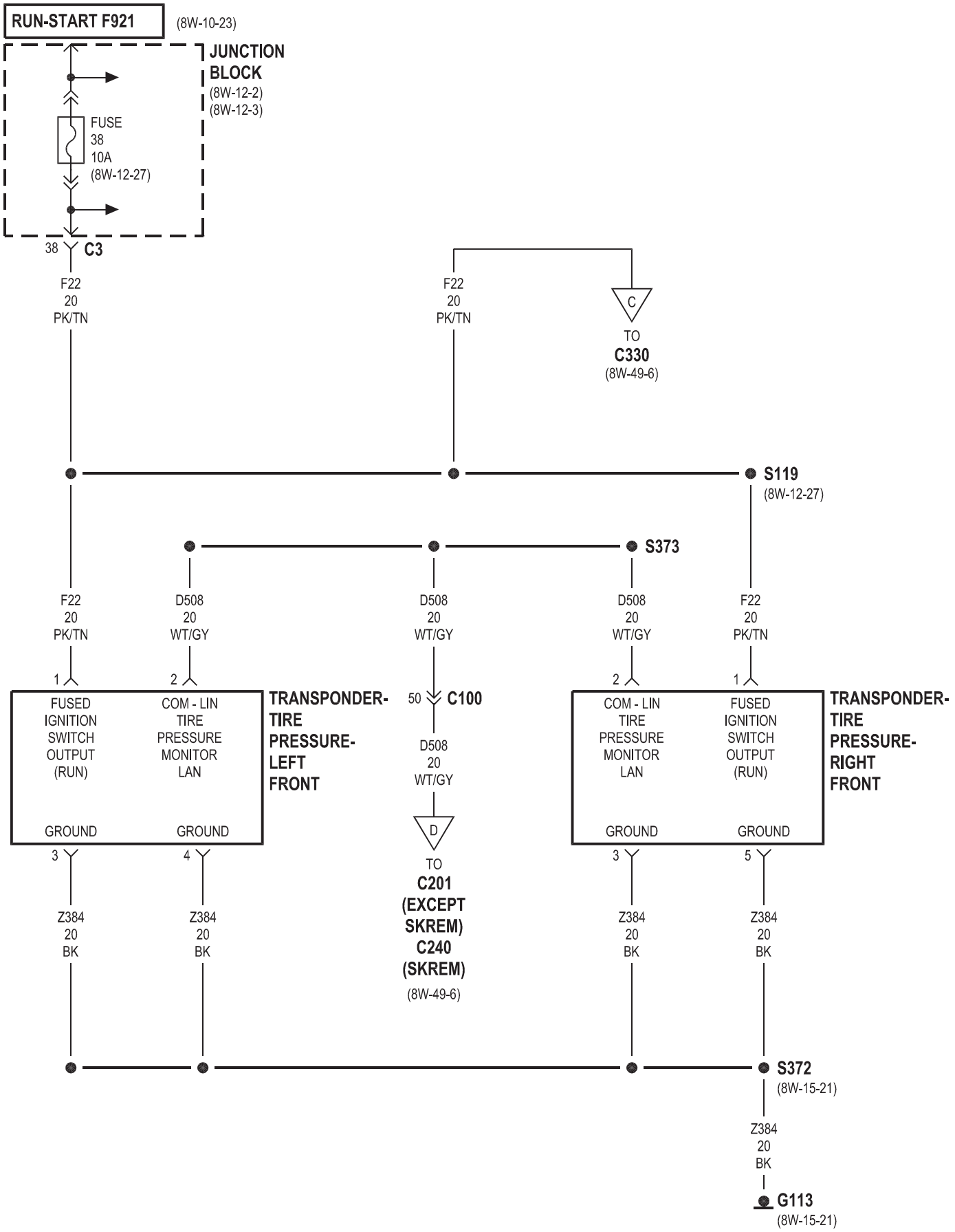
RUN-START F921
(8W-10-23)
JUNCTION BLOCK
(8W-12-2)
(8W-12-3)
FUSE
38
10A
(8W-12-27)
38
C3
F22
20
PK/TN
F22
20
PK/TN
C
TO
C330
(8W-49-6)
S119
(8W-12-27)
S373
F22
20
PK/TN
D508
20
WT/GY
D508
20
WT/GY
D508
20
WT/GY
F22
20
PK/TN
1
2
2
1
FUSED IGNITION SWITCH OUTPUT (RUN)
COM - LIN TIRE PRESSURE MONITOR LAN
GROUND
GROUND
TRANSPONDER-TIRE PRESSURE-LEFT FRONT
50
C100
D508
20
WT/GY
D
TO
C201
(EXCEPT SKREM)
C240
(SKREM)
(8W-49-6)
COM - LIN TIRE PRESSURE MONITOR LAN
FUSED IGNITION SWITCH OUTPUT (RUN)
GROUND
GROUND
TRANSPONDER-TIRE PRESSURE-RIGHT FRONT
3
4
3
5
Z384
20
BK
Z384
20
BK
Z384
20
BK
Z384
20
BK
S372
(8W-15-21)
Z384
20
BK
G113
(8W-15-21)

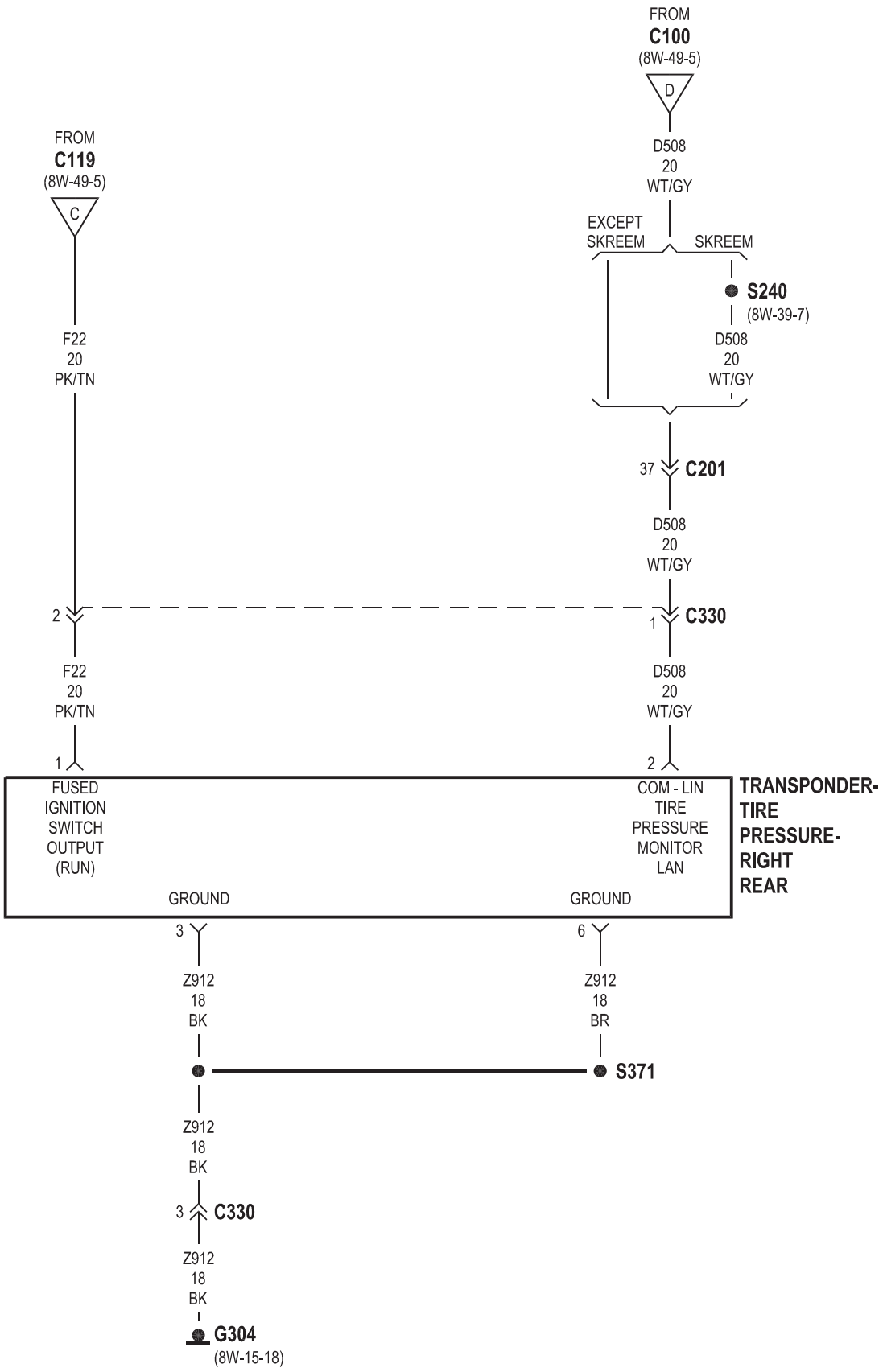
FROM
C100
(8W-49-5)
D
D508
20
WT/GY
EXCEPT
SKREEM
SKREEM
S240
(8W-39-7)
D508
20
WT/GY
FROM
C119
(8W-49-5)
C
F22
20
PK/TN
37
C201
D508
20
WT/GY
2
1
C330
F22
20
PK/TN
D508
20
WT/GY
1
2
FUSED
IGNITION
SWITCH
OUTPUT
(RUN)
COM - LIN
TIRE
PRESSURE
MONITOR
LAN
TRANSPONDER-
TIRE
PRESSURE-
RIGHT
REAR
GROUND
GROUND
3
6
Z912
18
BK
Z912
18
BR
S371
Z912
18
BK
3
C330
Z912
18
BK
G304
(8W-15-18)

8W-50 FRONT LIGHTING

Component	Page
Body Control Module	8W-50-2, 3, 8, 9, 15, 16
Daytime Running Lamp Relay	8W-50-2
Front Fog Lamp Relay	8W-50-9
Fuse 4	8W-50-3
Fuse 5	8W-50-3
Fuse 7	8W-50-6, 8
Fuse 9	8W-50-6, 8, 16
Fuse 12	8W-50-16
Fuse 13	8W-50-16
Fuse 19	8W-50-9
Fuse 26	8W-50-2
Fuse 27	8W-50-2
G111	8W-50-4, 5, 7, 10, 11, 12, 13, 14
G200	8W-50-17
G202	8W-50-2, 6, 16
Hazard Switch/Combination Flasher	8W-50-9
Headlamp Leveling Switch	8W-50-6
High Beam Relay	8W-50-2, 15
Instrument Cluster	8W-50-16
Junction Block	8W-50-2, 3, 4, 5, 6, 7, 8, 9, 11, 15, 16
Left Fog Lamp	8W-50-9, 10, 14
Left Front Park/Turn Signal Lamp	8W-50-9, 10, 12, 14
Left Headlamp	8W-50-4, 5
Left Leveling Motor	8W-50-5, 7
Left Side Marker Lamp	8W-50-10
Lightbar Lamp No. 1	8W-50-17
Lightbar Lamp No. 2	8W-50-17
Lightbar Lamp No. 3	8W-50-17
Lightbar Lamp No. 4	8W-50-17
Lightbar Switch	8W-50-3, 16, 17
Low Beam Relay	8W-50-3
Multi-Function Switch	8W-50-2, 15
Park Lamp Relay	8W-50-6, 8, 16
Power Distribution Center	8W-50-16
Right Fog Lamp	8W-50-9, 11, 13
Right Front Park/Turn Signal Lamp	8W-50-11, 12, 13
Right Headlamp	8W-50-4, 7
Right Leveling Motor	8W-50-5, 7
Right Side Marker Lamp	8W-50-11

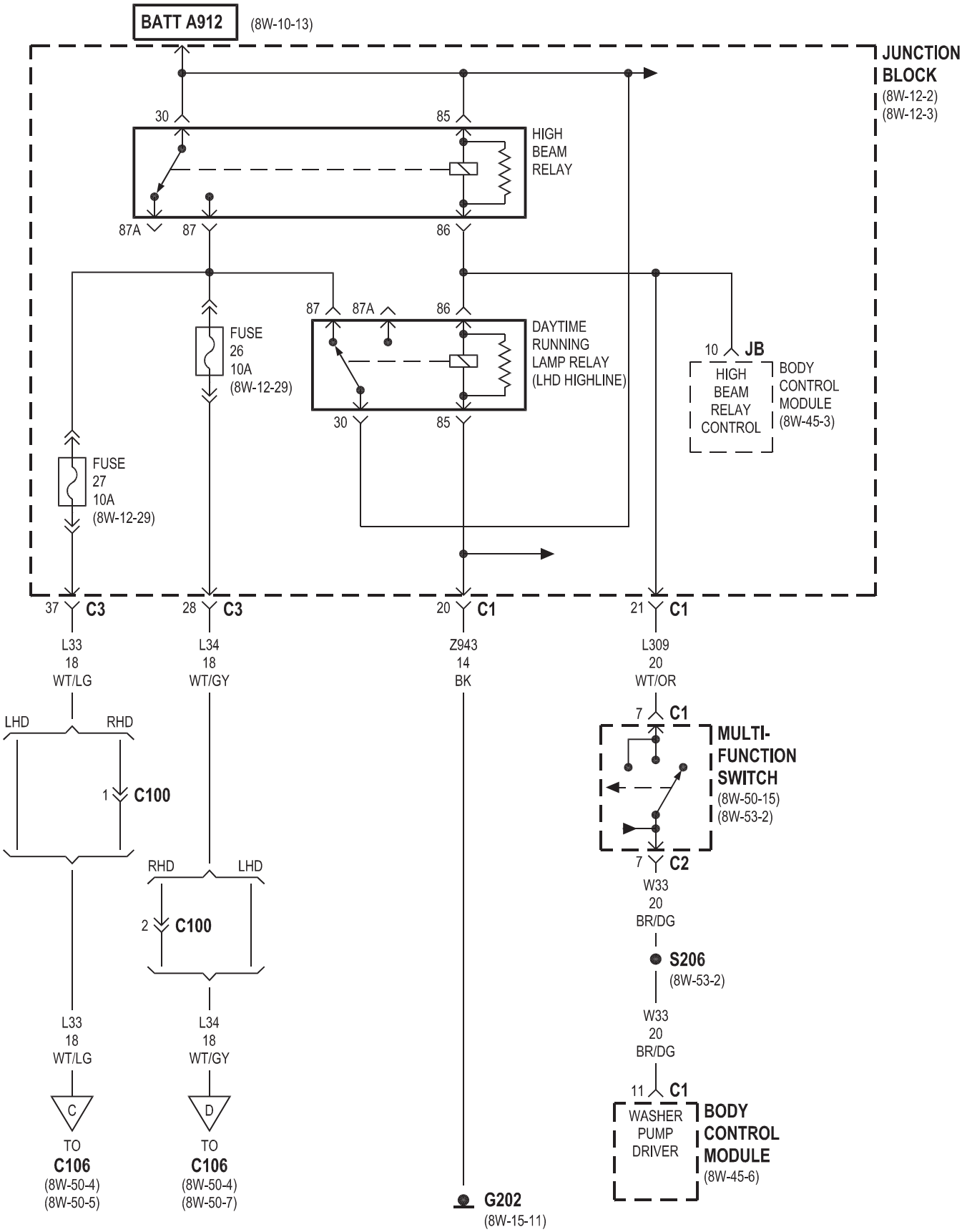
BATT A912
(8W-10-13)
JUNCTION BLOCK
(8W-12-2)
(8W-12-3)
30
85
HIGH BEAM RELAY
87A
87
86
87
87A
86
DAYTIME RUNNING LAMP RELAY (LHD HIGHLINE)
30
85
FUSE 26 10A (8W-12-29)
FUSE 27 10A (8W-12-29)
10
JB
HIGH BEAM RELAY CONTROL
BODY CONTROL MODULE (8W-45-3)
37 C3
28 C3
20 C1
21 C1
L33 18 WT/LG
L34 18 WT/GY
Z943 14 BK
L309 20 WT/OR
LHD
RHD
1 C100
RHD
LHD
2 C100
7 C1
MULTI-FUNCTION SWITCH
(8W-50-15)
(8W-53-2)
7 C2
W33 20 BR/DG
S206
(8W-53-2)
W33 20 BR/DG
11 C1
WASHER PUMP DRIVER
BODY CONTROL MODULE
(8W-45-6)
L33 18 WT/LG
L34 18 WT/GY
C
D
TO C106
(8W-50-4)
(8W-50-5)
TO C106
(8W-50-4)
(8W-50-7)
G202
(8W-15-11)

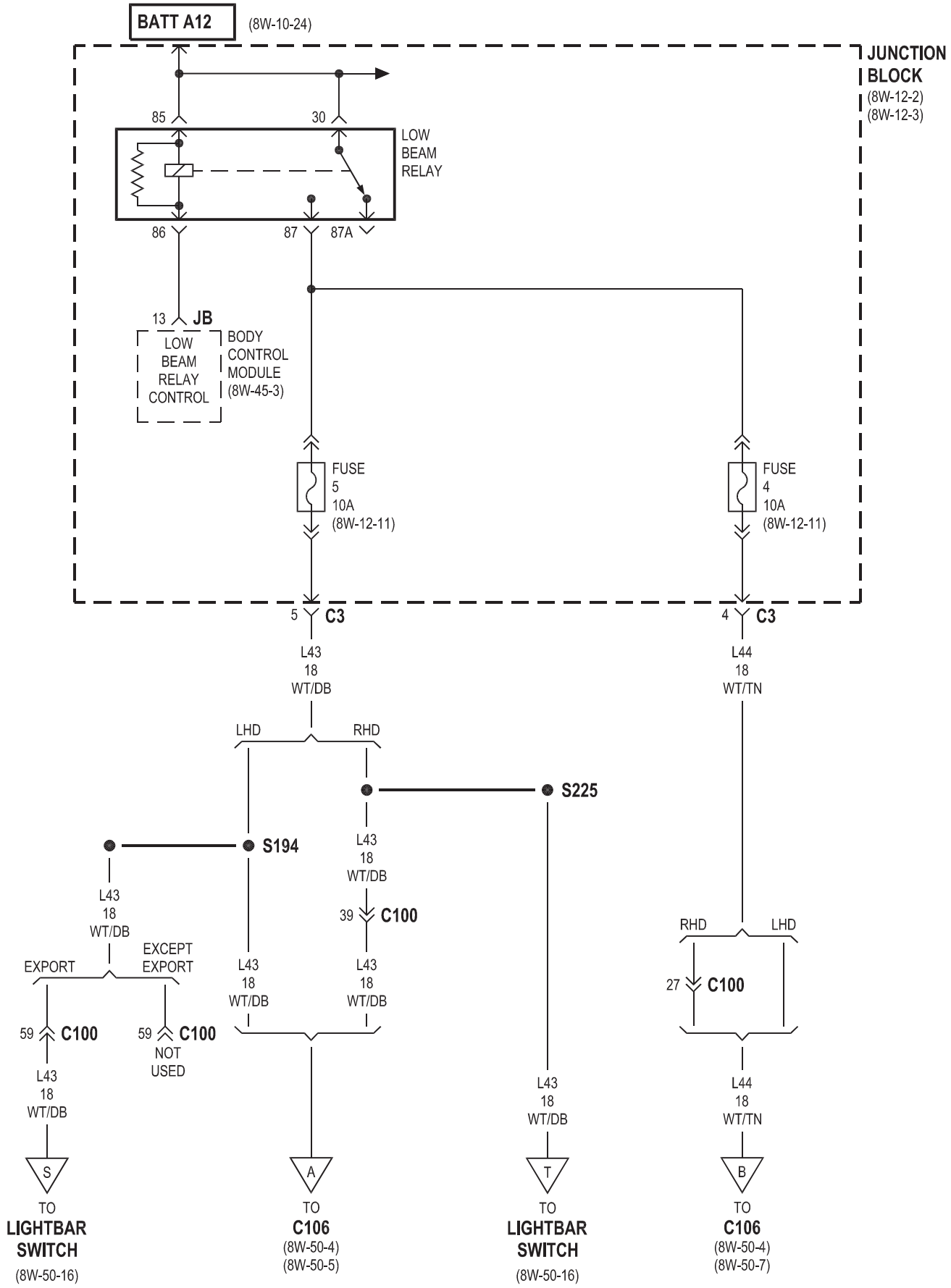
BATT A12
(8W-10-24)
JUNCTION BLOCK
(8W-12-2)
(8W-12-3)
85
30
LOW BEAM RELAY
86
87
87A
13
JB
LOW BEAM RELAY CONTROL
BODY CONTROL MODULE
(8W-45-3)
FUSE 5 10A
(8W-12-11)
FUSE 4 10A
(8W-12-11)
5
C3
4
C3
L43 18 WT/DB
L44 18 WT/TN
LHD
RHD
S225
S194
L43 18 WT/DB
39
C100
EXPORT
EXCEPT EXPORT
59
C100
59
C100
NOT USED
RHD
LHD
27
C100
S
A
T
B
TO LIGHTBAR SWITCH
(8W-50-16)
TO C106
(8W-50-4)
(8W-50-5)
TO LIGHTBAR SWITCH
(8W-50-16)
TO C106
(8W-50-4)
(8W-50-7)

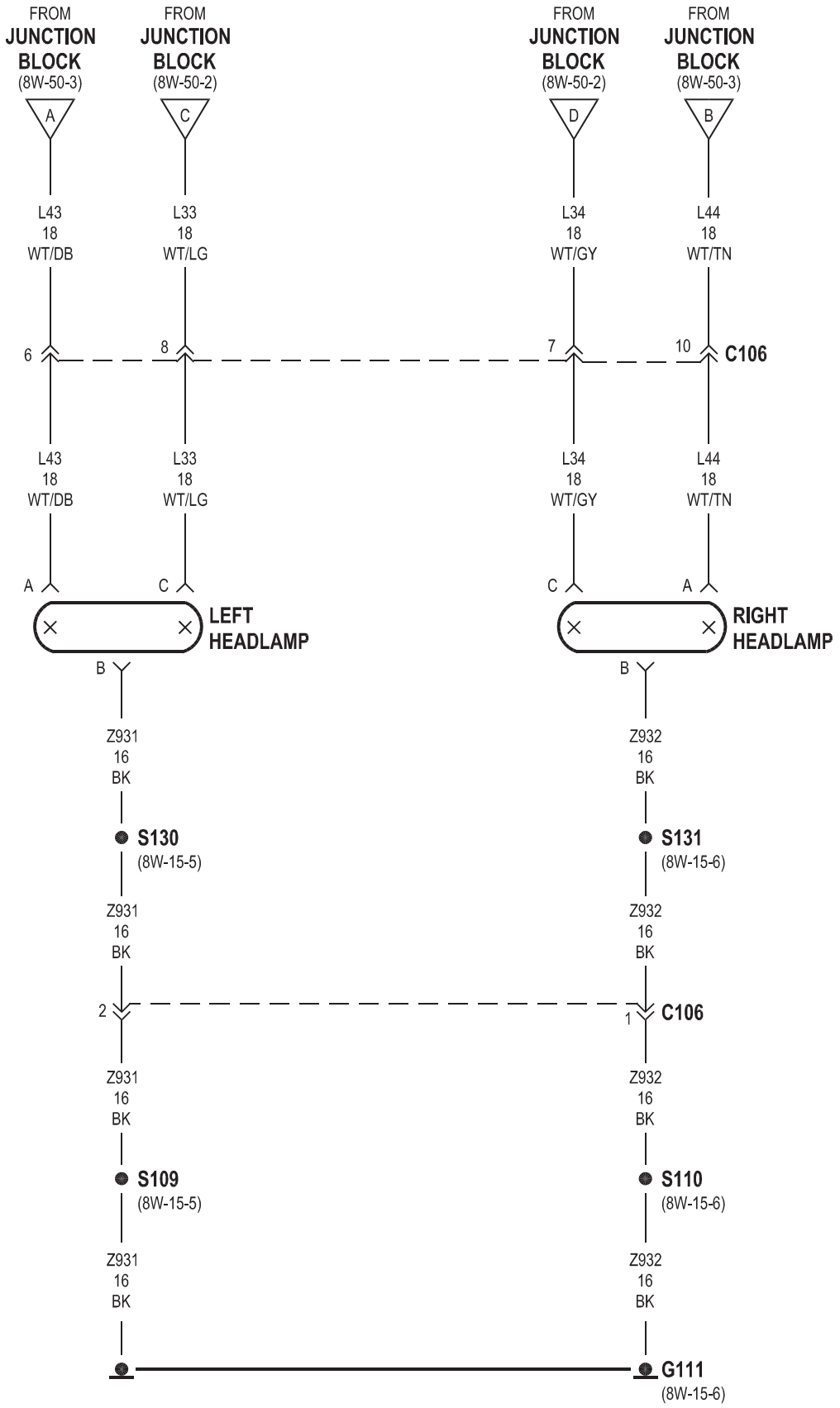
FROM JUNCTION BLOCK (8W-50-3)
A
FROM JUNCTION BLOCK (8W-50-2)
C
FROM JUNCTION BLOCK (8W-50-2)
D
FROM JUNCTION BLOCK (8W-50-3)
B
L43 18 WT/DB
L33 18 WT/LG
L34 18 WT/GY
L44 18 WT/TN
6
8
7
10
C106
L43 18 WT/DB
L33 18 WT/LG
L34 18 WT/GY
L44 18 WT/TN
A
C
C
A
LEFT HEADLAMP
RIGHT HEADLAMP
B
B
Z931 16 BK
Z932 16 BK
S130
(8W-15-5)
S131
(8W-15-6)
Z931 16 BK
Z932 16 BK
2
1
C106
Z931 16 BK
Z932 16 BK
S109
(8W-15-5)
S110
(8W-15-6)
Z931 16 BK
Z932 16 BK
G111
(8W-15-6)

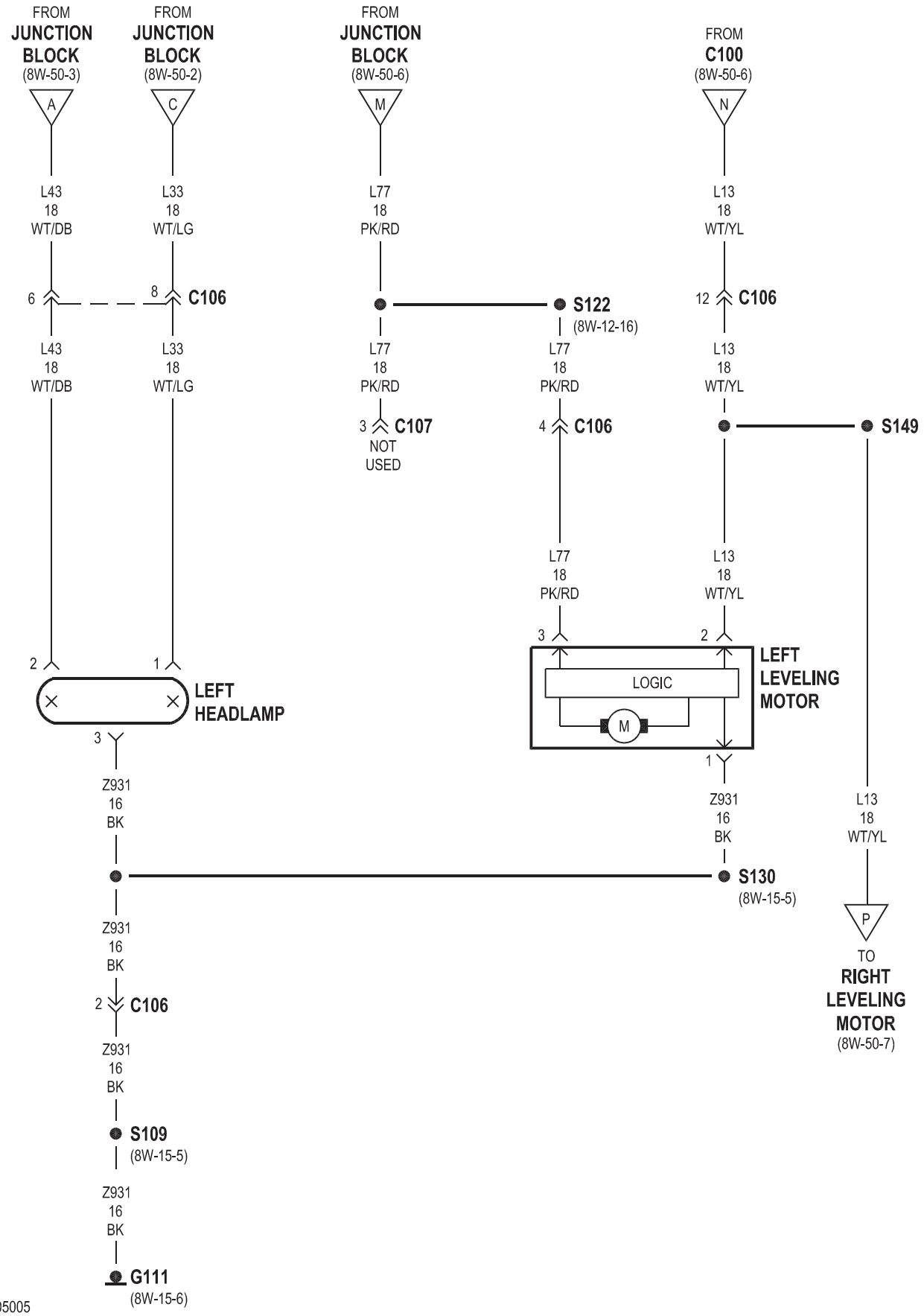
FROM
JUNCTION BLOCK
(8W-50-3)
A
L43
18
WT/DB
6
L43
18
WT/DB
FROM
JUNCTION BLOCK
(8W-50-2)
C
L33
18
WT/LG
8
C106
L33
18
WT/LG
FROM
JUNCTION BLOCK
(8W-50-6)
M
L77
18
PK/RD
S122
(8W-12-16)
L77
18
PK/RD
3
C107
NOT USED
L77
18
PK/RD
4
C106
FROM
C100
(8W-50-6)
N
L13
18
WT/YL
12
C106
L13
18
WT/YL
S149
L77
18
PK/RD
3
L13
18
WT/YL
2
LEFT LEVELING MOTOR
LOGIC
M
1
2
1
LEFT HEADLAMP
3
Z931
16
BK
Z931
16
BK
S130
(8W-15-5)
L13
18
WT/YL
P
TO
RIGHT LEVELING MOTOR
(8W-50-7)
Z931
16
BK
2
C106
Z931
16
BK
S109
(8W-15-5)
Z931
16
BK
G111
(8W-15-6)

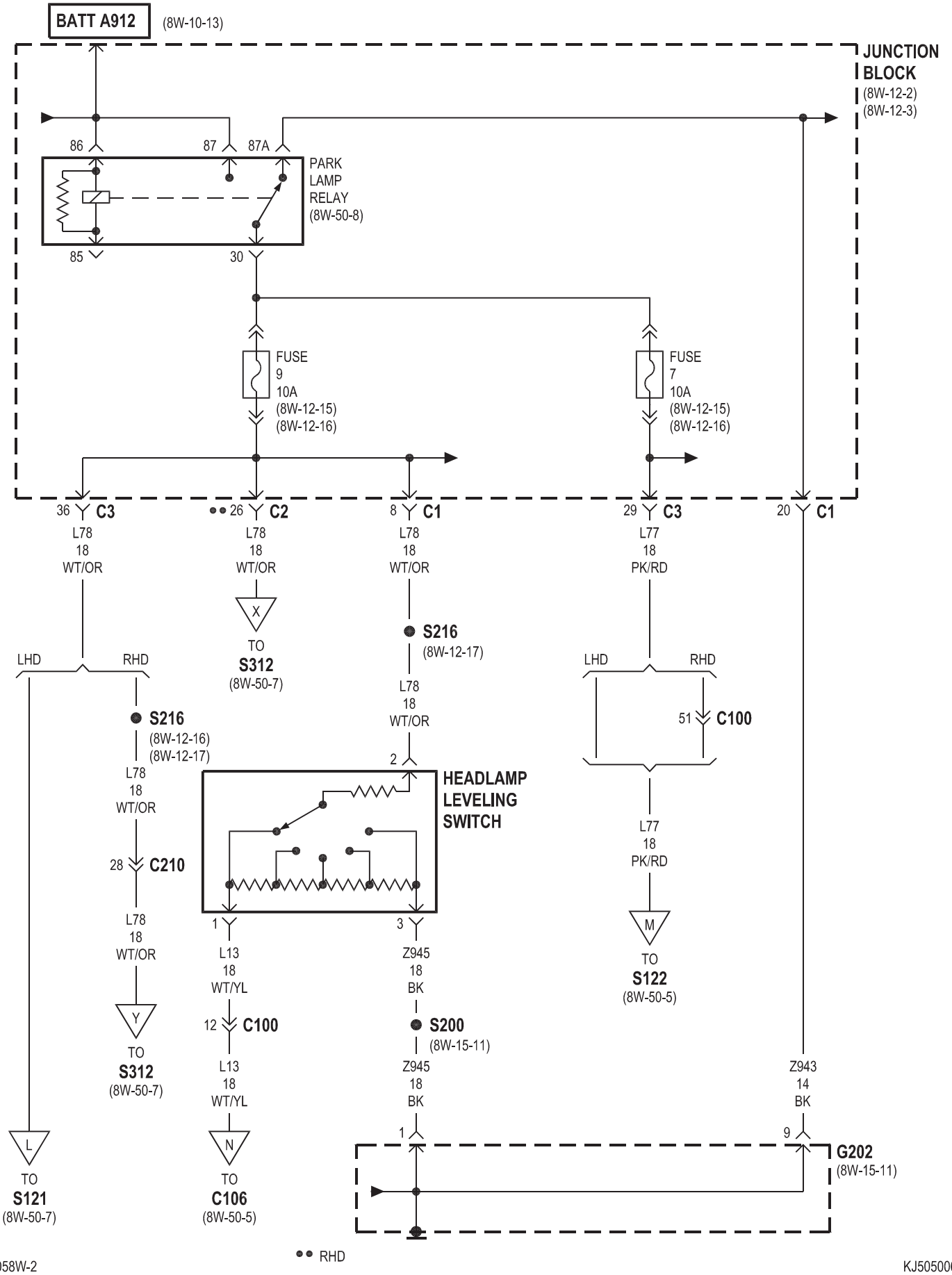
BATT A912
(8W-10-13)
JUNCTION BLOCK
(8W-12-2)
(8W-12-3)
86
87
87A
PARK LAMP RELAY
(8W-50-8)
85
30
FUSE 9 10A
(8W-12-15)
(8W-12-16)
FUSE 7 10A
(8W-12-15)
(8W-12-16)
36 C3
26 C2
8 C1
29 C3
20 C1
L78 18 WT/OR
L78 18 WT/OR
L78 18 WT/OR
L77 18 PK/RD
X
TO S312
(8W-50-7)
S216
(8W-12-17)
LHD
RHD
S216
(8W-12-16)
(8W-12-17)
L78 18 WT/OR
2
HEADLAMP LEVELING SWITCH
51 C100
L77 18 PK/RD
28 C210
L78 18 WT/OR
1
3
L13 18 WT/YL
Z945 18 BK
M
TO S122
(8W-50-5)
Y
TO S312
(8W-50-7)
12 C100
S200
(8W-15-11)
L13 18 WT/YL
Z945 18 BK
Z943 14 BK
1
9
G202
(8W-15-11)
L
TO S121
(8W-50-7)
N
TO C106
(8W-50-5)
RHD

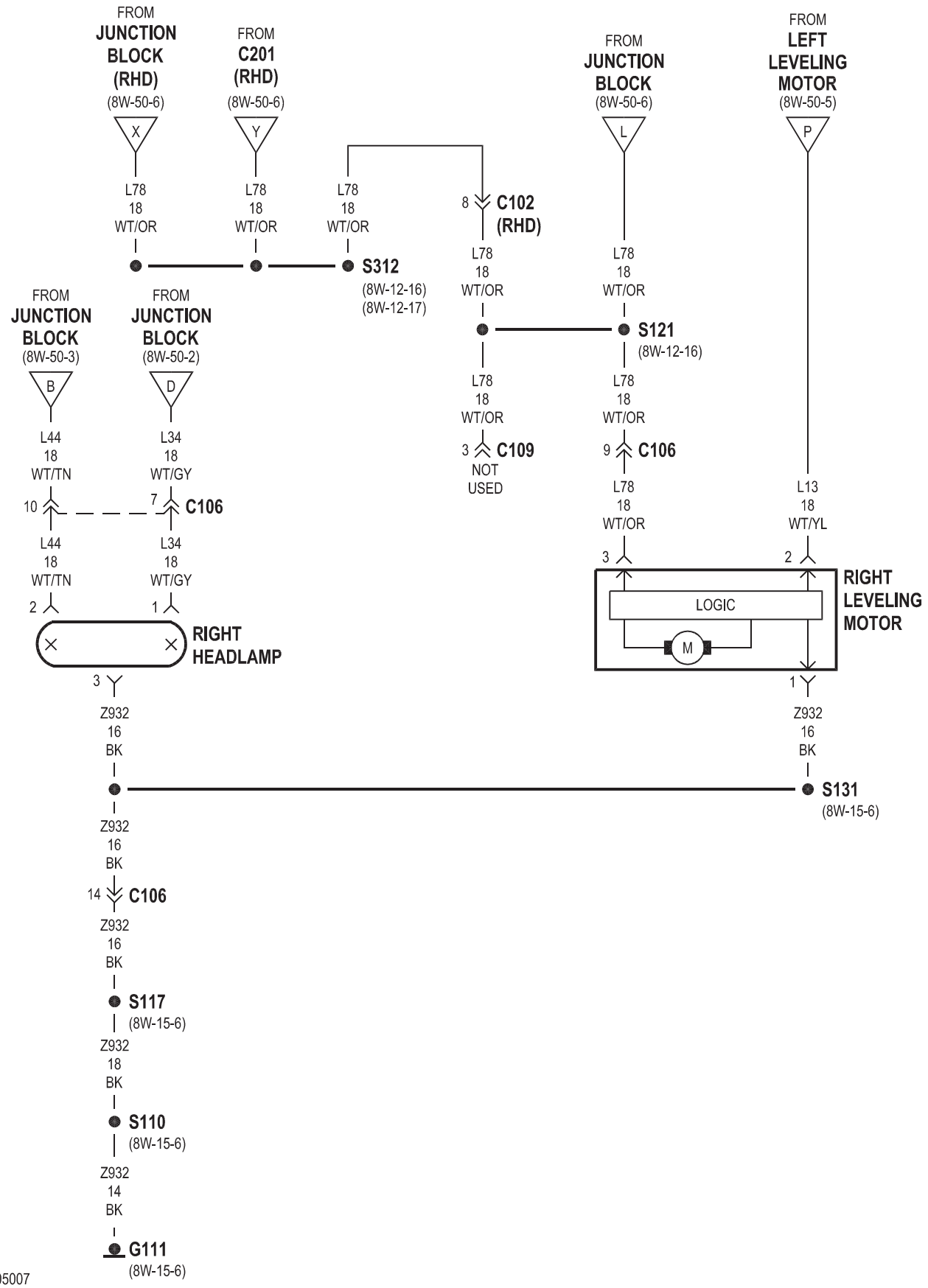
FROM JUNCTION BLOCK (RHD) (8W-50-6)
X
L78 18 WT/OR
FROM C201 (RHD) (8W-50-6)
Y
L78 18 WT/OR
L78 18 WT/OR
S312 (8W-12-16) (8W-12-17)
8 C102 (RHD)
L78 18 WT/OR
FROM JUNCTION BLOCK (8W-50-6)
L
L78 18 WT/OR
S121 (8W-12-16)
FROM LEFT LEVELING MOTOR (8W-50-5)
P
FROM JUNCTION BLOCK (8W-50-3)
B
L44 18 WT/TN
FROM JUNCTION BLOCK (8W-50-2)
D
L34 18 WT/GY
10
7 C106
L44 18 WT/TN
L34 18 WT/GY
2
1
RIGHT HEADLAMP
3
Z932 16 BK
L78 18 WT/OR
3 C109 NOT USED
L78 18 WT/OR
9 C106
L78 18 WT/OR
3
2
LOGIC
M
RIGHT LEVELING MOTOR
L13 18 WT/YL
1
Z932 16 BK
S131 (8W-15-6)
Z932 16 BK
14 C106
Z932 16 BK
S117 (8W-15-6)
Z932 18 BK
S110 (8W-15-6)
Z932 14 BK
G111 (8W-15-6)

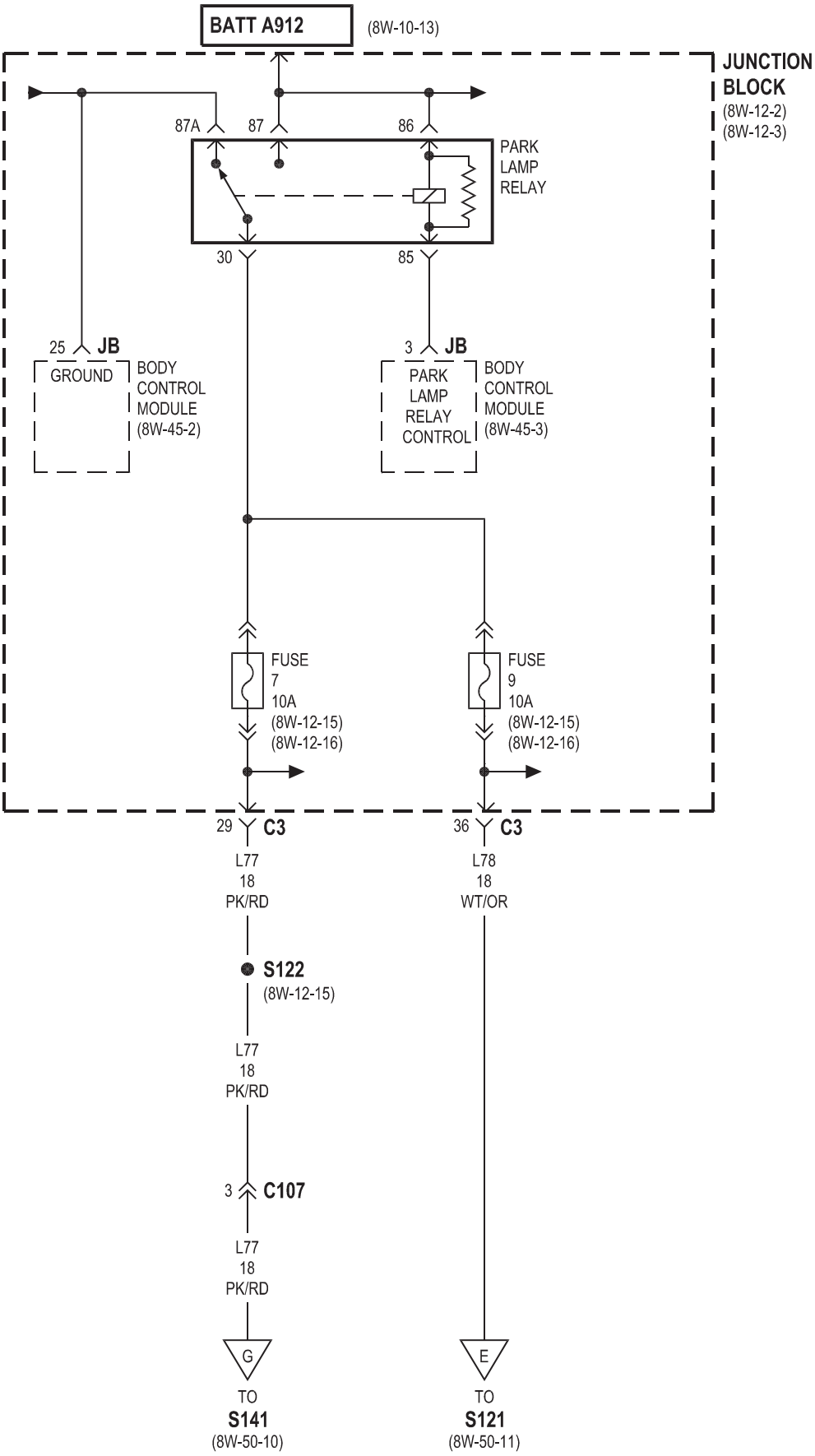
BATT A912
(8W-10-13)
JUNCTION BLOCK
(8W-12-2)
(8W-12-3)
87A
87
86
PARK LAMP RELAY
30
85
25 JB
GROUND
BODY CONTROL MODULE
(8W-45-2)
3 JB
PARK LAMP RELAY CONTROL
BODY CONTROL MODULE
(8W-45-3)
FUSE 7 10A
(8W-12-15)
(8W-12-16)
FUSE 9 10A
(8W-12-15)
(8W-12-16)
29 C3
36 C3
L77 18 PK/RD
L78 18 WT/OR
S122
(8W-12-15)
L77 18 PK/RD
3 C107
L77 18 PK/RD
G
E
TO S141
(8W-50-10)
TO S121
(8W-50-11)

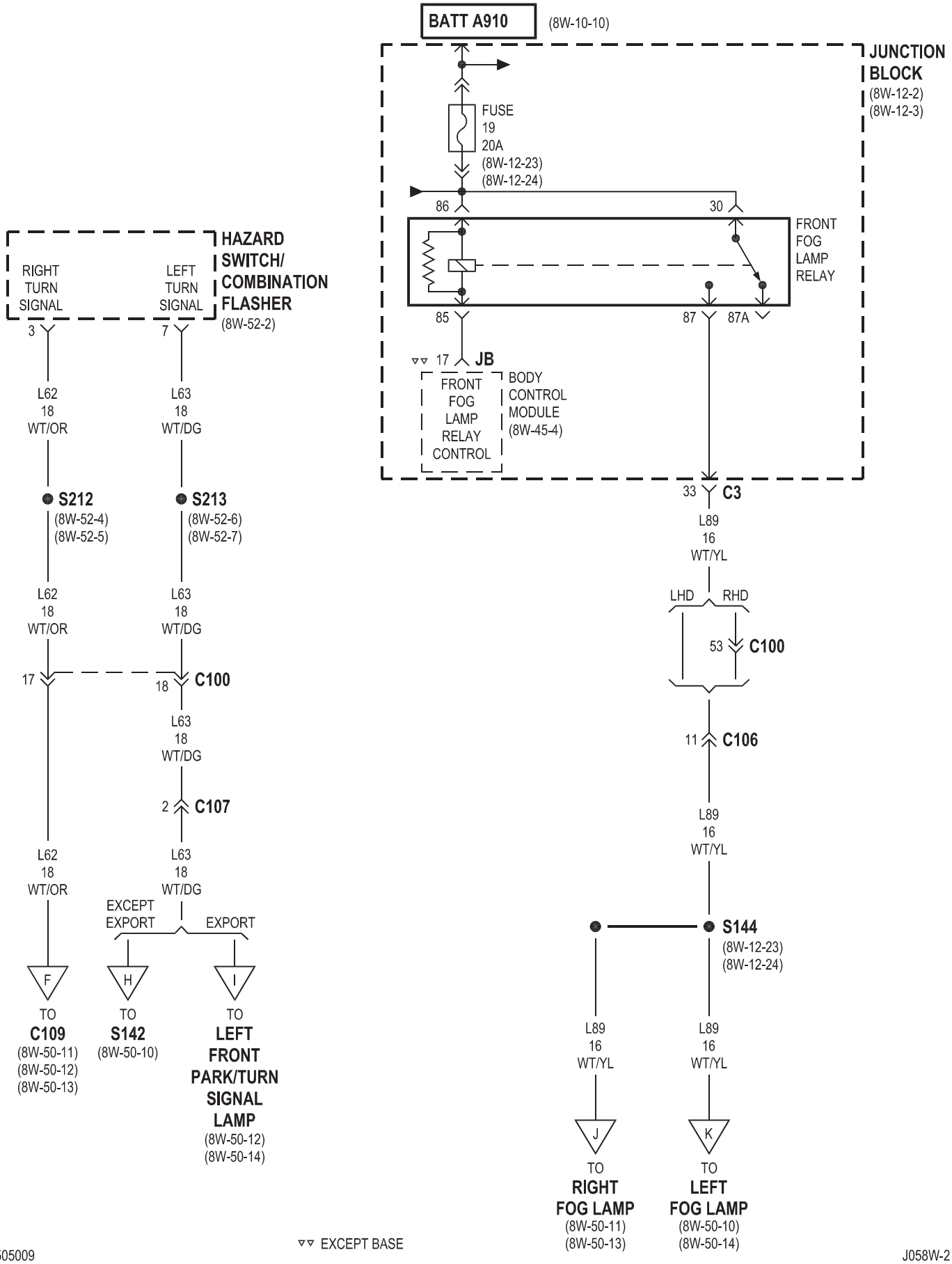
BATT A910
(8W-10-10)
JUNCTION BLOCK
(8W-12-2)
(8W-12-3)
FUSE
19
20A
(8W-12-23)
(8W-12-24)
86
30
FRONT FOG LAMP RELAY
85
87
87A
17
JB
FRONT FOG LAMP RELAY CONTROL
BODY CONTROL MODULE
(8W-45-4)
33
C3
L89
16
WT/YL
LHD
RHD
53
C100
11
C106
L89
16
WT/YL
S144
(8W-12-23)
(8W-12-24)
L89
16
WT/YL
J
TO
RIGHT FOG LAMP
(8W-50-11)
(8W-50-13)
L89
16
WT/YL
K
TO
LEFT FOG LAMP
(8W-50-10)
(8W-50-14)
HAZARD SWITCH/ COMBINATION FLASHER
(8W-52-2)
RIGHT TURN SIGNAL
LEFT TURN SIGNAL
3
7
L62
18
WT/OR
L63
18
WT/DG
S212
(8W-52-4)
(8W-52-5)
S213
(8W-52-6)
(8W-52-7)
L62
18
WT/OR
L63
18
WT/DG
17
18
C100
L63
18
WT/DG
2
C107
L62
18
WT/OR
L63
18
WT/DG
EXCEPT EXPORT
EXPORT
F
H
I
TO
C109
(8W-50-11)
(8W-50-12)
(8W-50-13)
TO
S142
(8W-50-10)
TO
LEFT FRONT PARK/TURN SIGNAL LAMP
(8W-50-12)
(8W-50-14)

▿▿ EXCEPT BASE

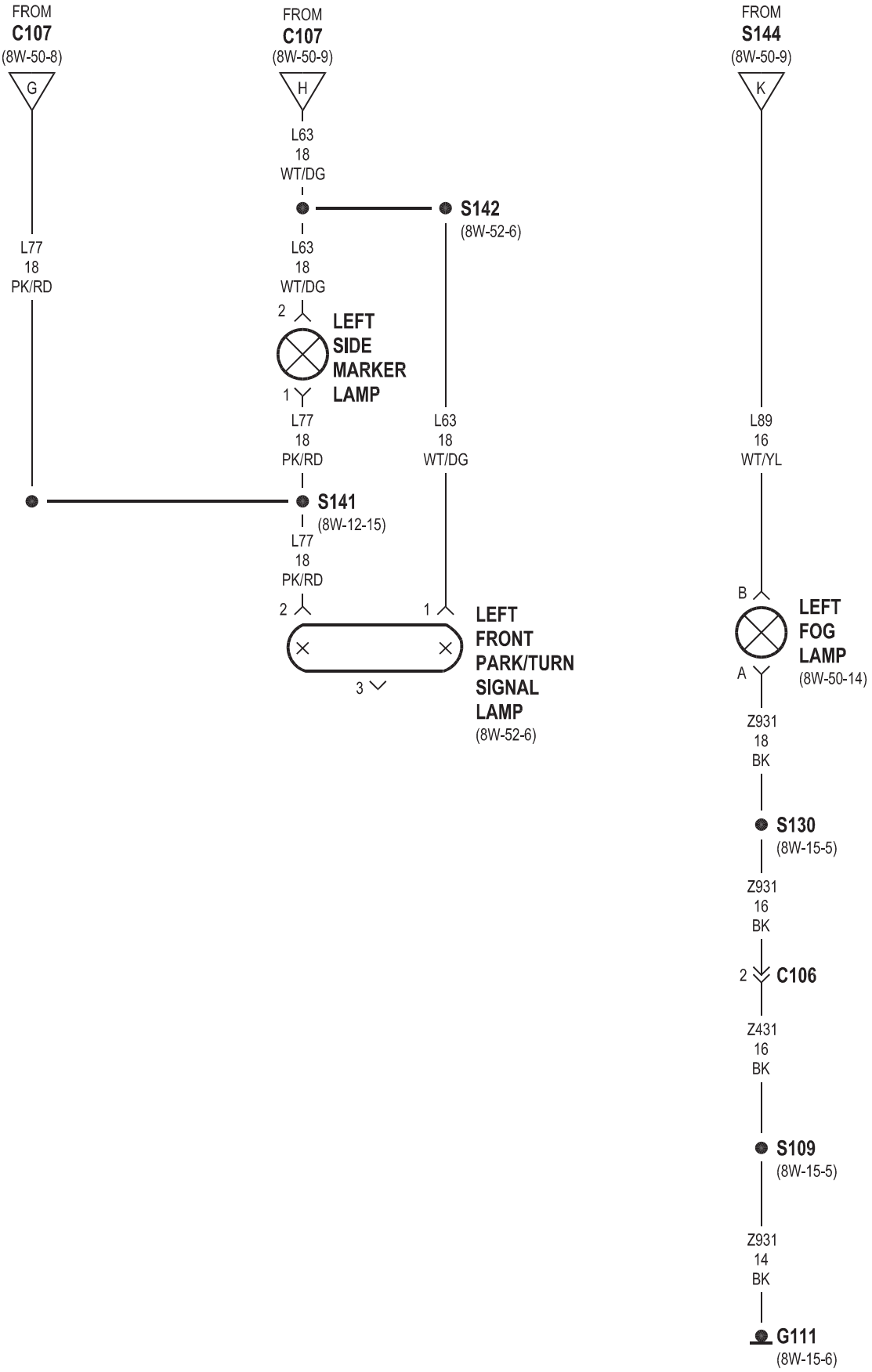
FROM
C107
(8W-50-8)
G
L77
18
PK/RD
FROM
C107
(8W-50-9)
H
L63
18
WT/DG
S142
(8W-52-6)
L63
18
WT/DG
2
LEFT
SIDE
MARKER
LAMP
1
L77
18
PK/RD
L63
18
WT/DG
S141
(8W-12-15)
L77
18
PK/RD
2
1
LEFT
FRONT
PARK/TURN
SIGNAL
LAMP
(8W-52-6)
3
FROM
S144
(8W-50-9)
K
L89
16
WT/YL
B
LEFT
FOG
LAMP
(8W-50-14)
A
Z931
18
BK
S130
(8W-15-5)
Z931
16
BK
2
C106
Z431
16
BK
S109
(8W-15-5)
Z931
14
BK
G111
(8W-15-6)

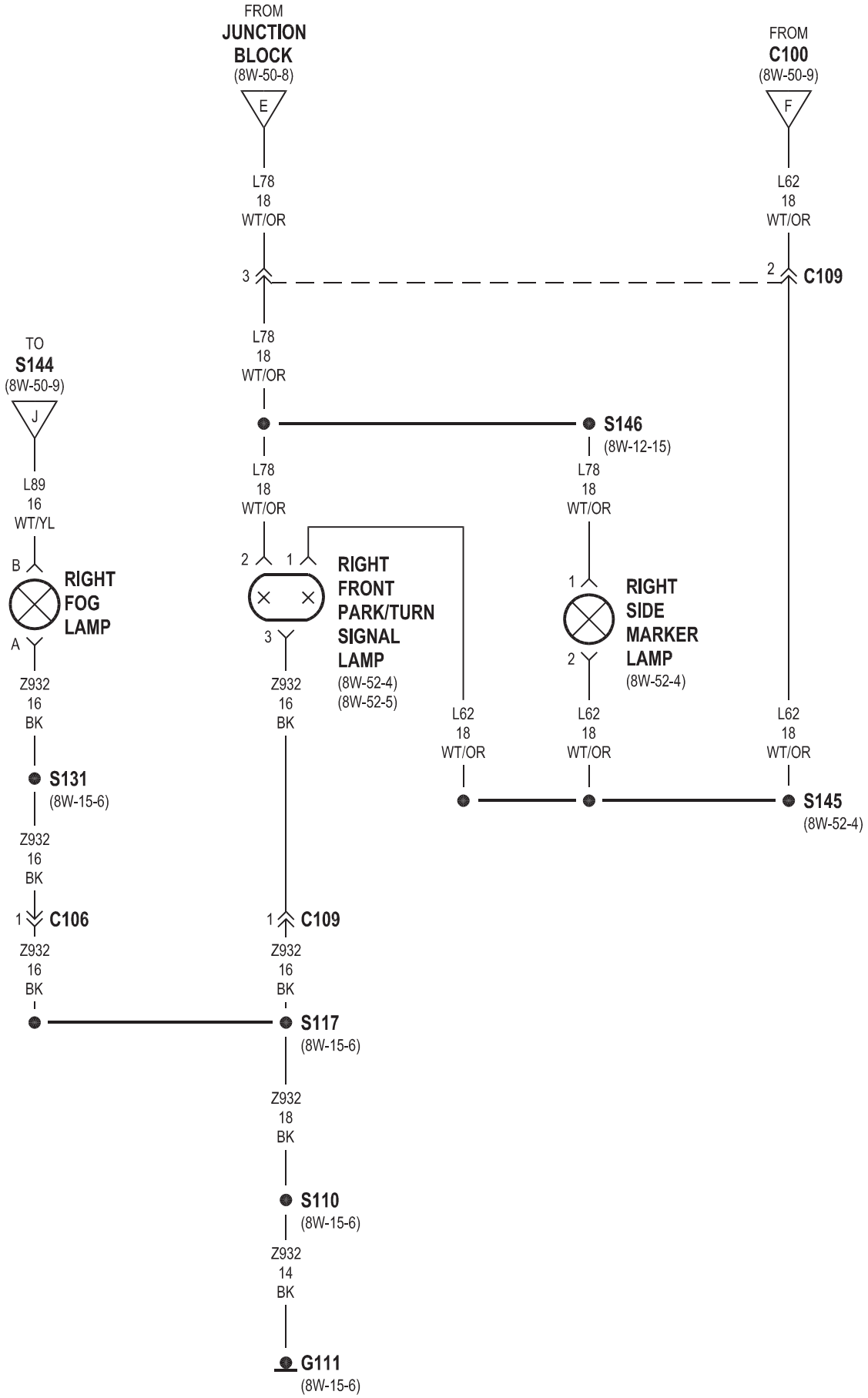
FROM
JUNCTION
BLOCK
(8W-50-8)
E
L78
18
WT/OR
3
FROM
C100
(8W-50-9)
F
L62
18
WT/OR
2
C109
TO
S144
(8W-50-9)
J
L89
16
WT/YL
B
RIGHT
FOG
LAMP
A
Z932
16
BK
S131
(8W-15-6)
Z932
16
BK
1
C106
Z932
16
BK
L78
18
WT/OR
S146
(8W-12-15)
L78
18
WT/OR
2
1
RIGHT
FRONT
PARK/TURN
SIGNAL
LAMP
(8W-52-4)
(8W-52-5)
3
Z932
16
BK
1
C109
Z932
16
BK
S117
(8W-15-6)
Z932
18
BK
S110
(8W-15-6)
Z932
14
BK
G111
(8W-15-6)
L78
18
WT/OR
1
RIGHT
SIDE
MARKER
LAMP
(8W-52-4)
2
L62
18
WT/OR
L62
18
WT/OR
L62
18
WT/OR
S145
(8W-52-4)

EXPORT EXCEPT FOG LAMPS

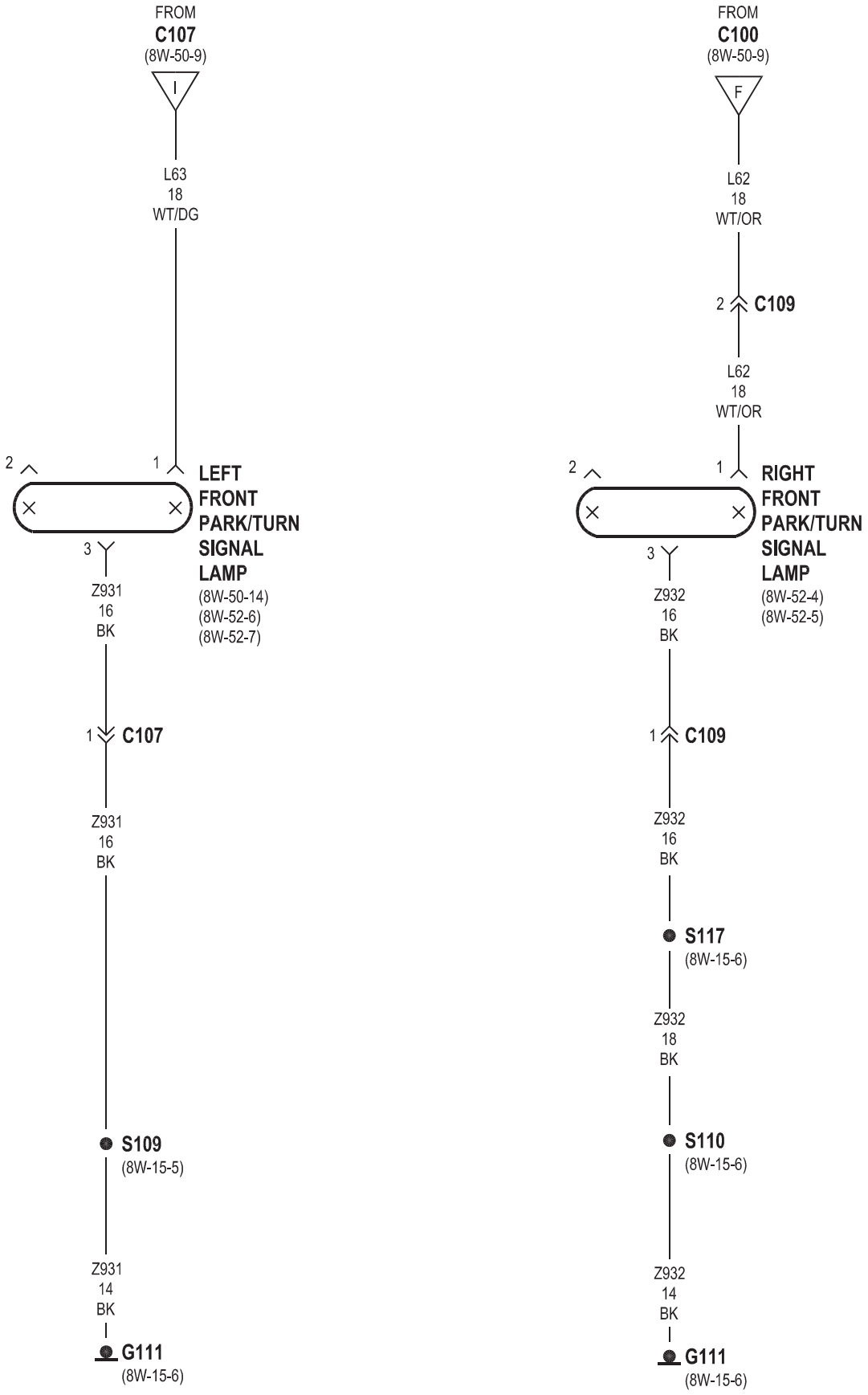

EXPORT FOG LAMPS

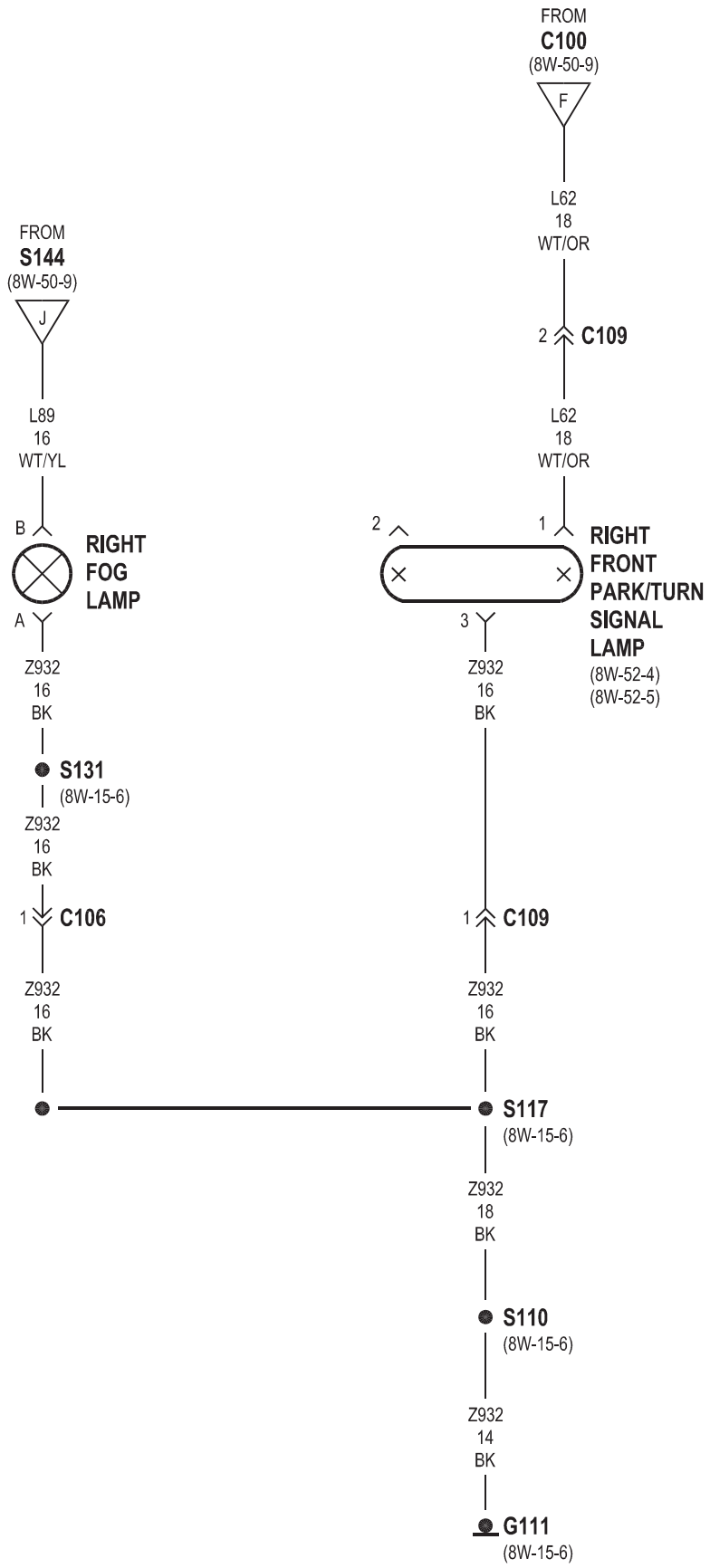

EXPORT FOG LAMPS

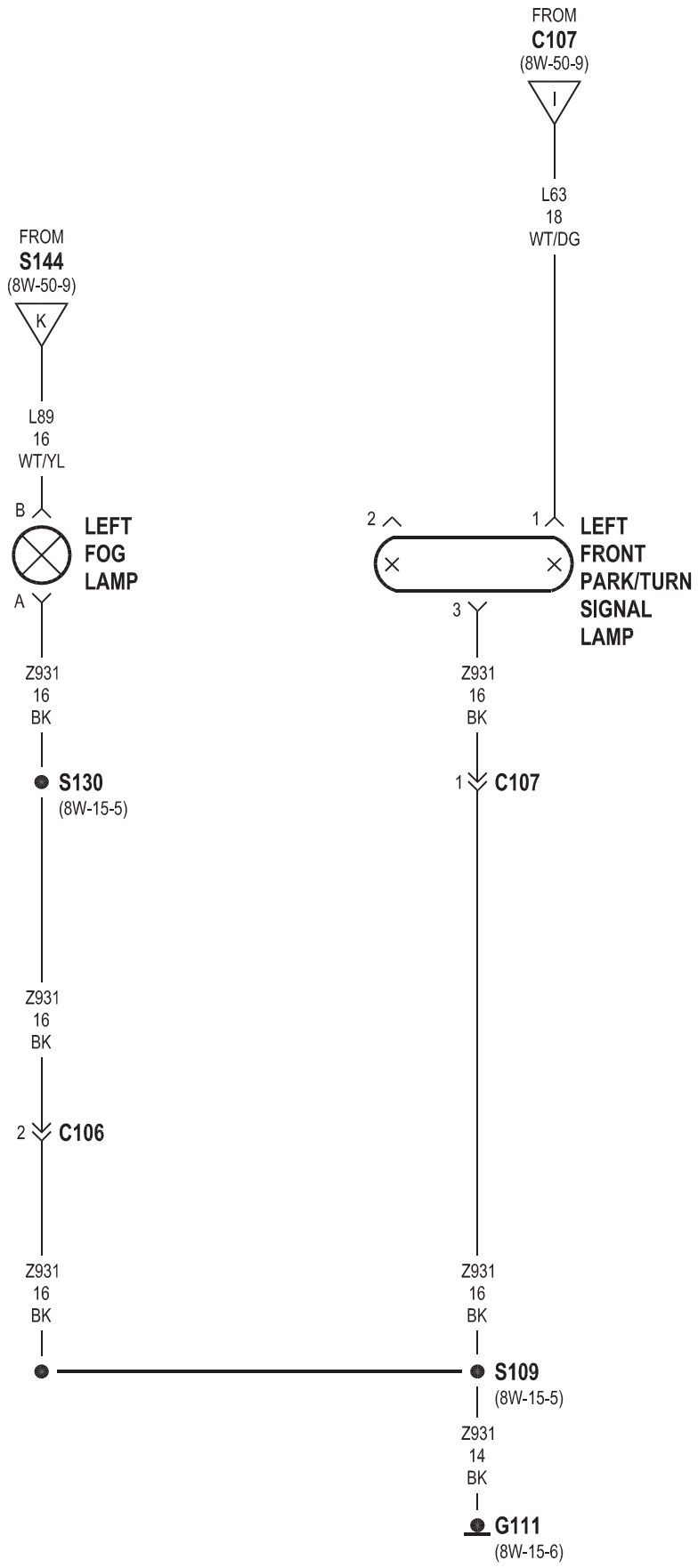

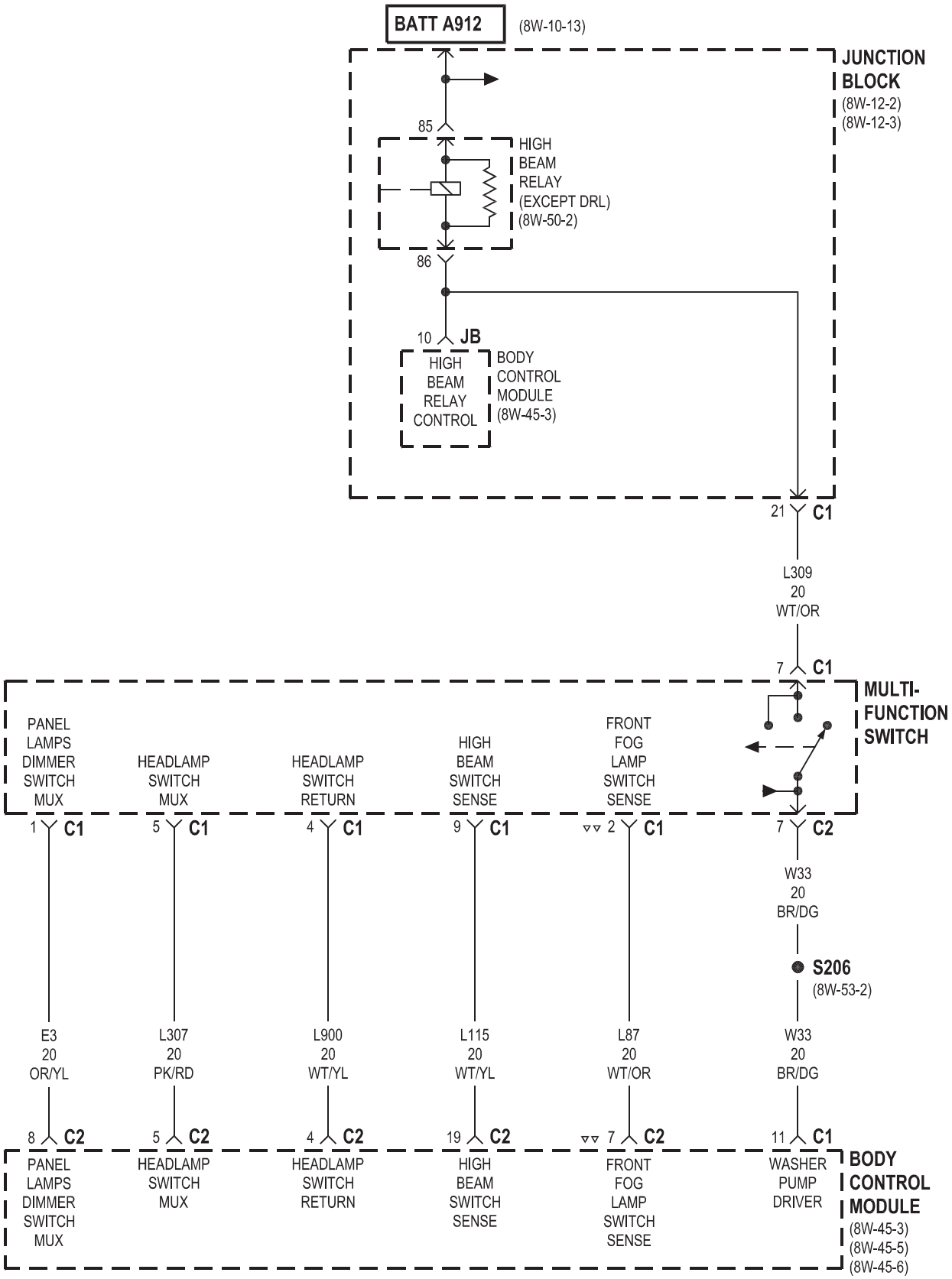
BATT A912
(8W-10-13)
JUNCTION BLOCK
(8W-12-2)
(8W-12-3)
85
HIGH BEAM RELAY (EXCEPT DRL) (8W-50-2)
86
10
JB
HIGH BEAM RELAY CONTROL
BODY CONTROL MODULE (8W-45-3)
21
C1
L309
20
WT/OR
7
C1
MULTI-FUNCTION SWITCH
PANEL LAMPS DIMMER SWITCH MUX
HEADLAMP SWITCH MUX
HEADLAMP SWITCH RETURN
HIGH BEAM SWITCH SENSE
FRONT FOG LAMP SWITCH SENSE
1 C1
5 C1
4 C1
9 C1
▿▿ 2 C1
7 C2
W33
20
BR/DG
S206
(8W-53-2)
E3
20
OR/YL
L307
20
PK/RD
L900
20
WT/YL
L115
20
WT/YL
L87
20
WT/OR
W33
20
BR/DG
8 C2
5 C2
4 C2
19 C2
▿▿ 7 C2
11 C1
PANEL LAMPS DIMMER SWITCH MUX
HEADLAMP SWITCH MUX
HEADLAMP SWITCH RETURN
HIGH BEAM SWITCH SENSE
FRONT FOG LAMP SWITCH SENSE
WASHER PUMP DRIVER
BODY CONTROL MODULE
(8W-45-3)
(8W-45-5)
(8W-45-6)

▿▿ EXCEPT BASE

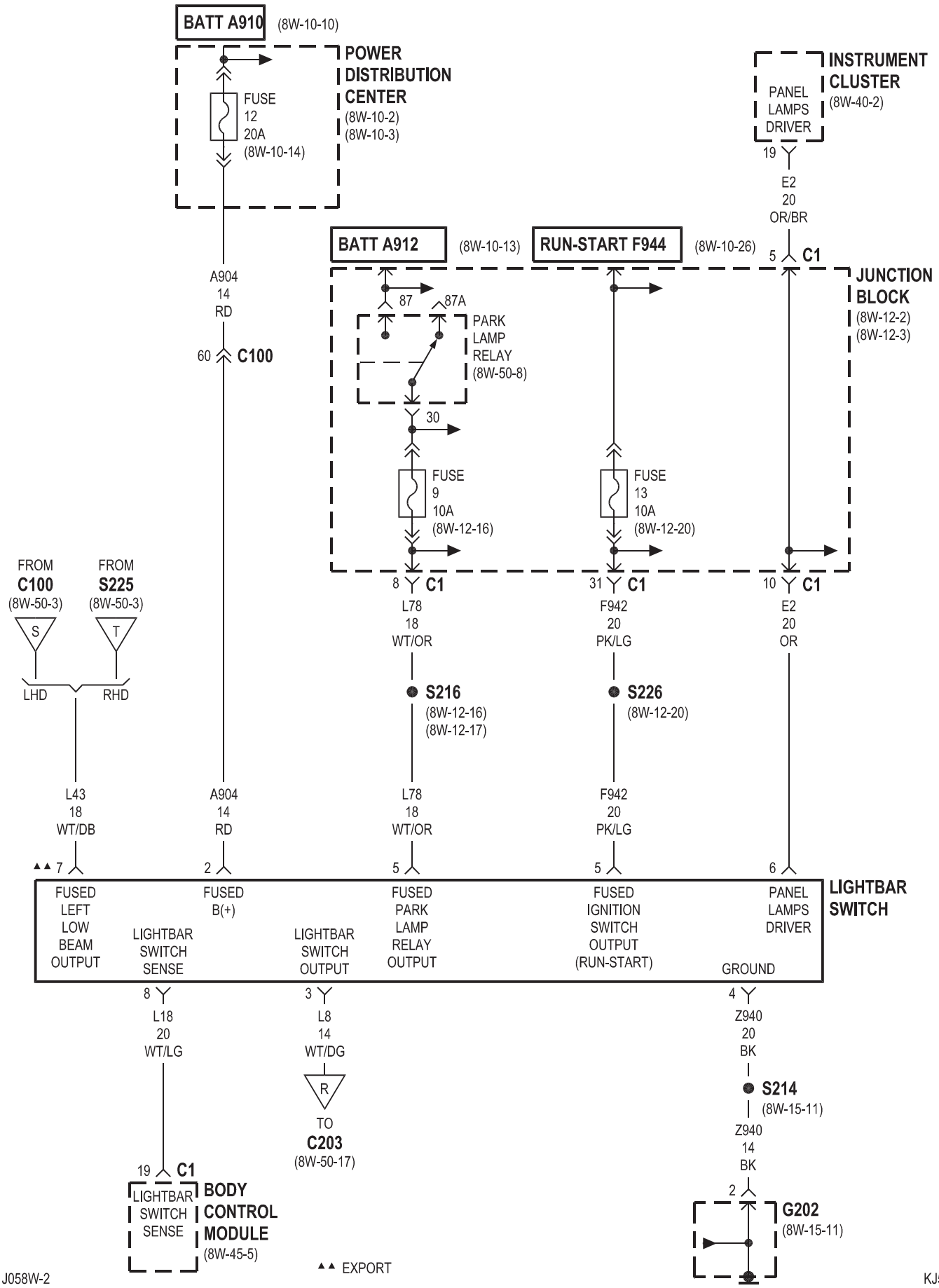
BATT A910
(8W-10-10)
POWER DISTRIBUTION CENTER
(8W-10-2)
(8W-10-3)
FUSE 12 20A (8W-10-14)
INSTRUMENT CLUSTER
(8W-40-2)
PANEL LAMPS DRIVER
19
E2 20 OR/BR
BATT A912
(8W-10-13)
RUN-START F944
(8W-10-26)
5 C1
JUNCTION BLOCK
(8W-12-2)
(8W-12-3)
A904 14 RD
60 C100
87
87A
PARK LAMP RELAY (8W-50-8)
30
FUSE 9 10A (8W-12-16)
FUSE 13 10A (8W-12-20)
FROM C100 (8W-50-3)
FROM S225 (8W-50-3)
S
T
LHD
RHD
8 C1
L78 18 WT/OR
31 C1
F942 20 PK/LG
10 C1
E2 20 OR
S216
(8W-12-16)
(8W-12-17)
S226
(8W-12-20)
L43 18 WT/DB
A904 14 RD
L78 18 WT/OR
F942 20 PK/LG
▲▲ 7
2
5
5
6
LIGHTBAR SWITCH
FUSED LEFT LOW BEAM OUTPUT
FUSED B(+)
FUSED PARK LAMP RELAY OUTPUT
FUSED IGNITION SWITCH OUTPUT (RUN-START)
PANEL LAMPS DRIVER
LIGHTBAR SWITCH SENSE
LIGHTBAR SWITCH OUTPUT
GROUND
8
L18 20 WT/LG
3
L8 14 WT/DG
R
TO C203
(8W-50-17)
4
Z940 20 BK
S214
(8W-15-11)
Z940 14 BK
19 C1
LIGHTBAR SWITCH SENSE
BODY CONTROL MODULE
(8W-45-5)
2
G202
(8W-15-11)
▲▲ EXPORT

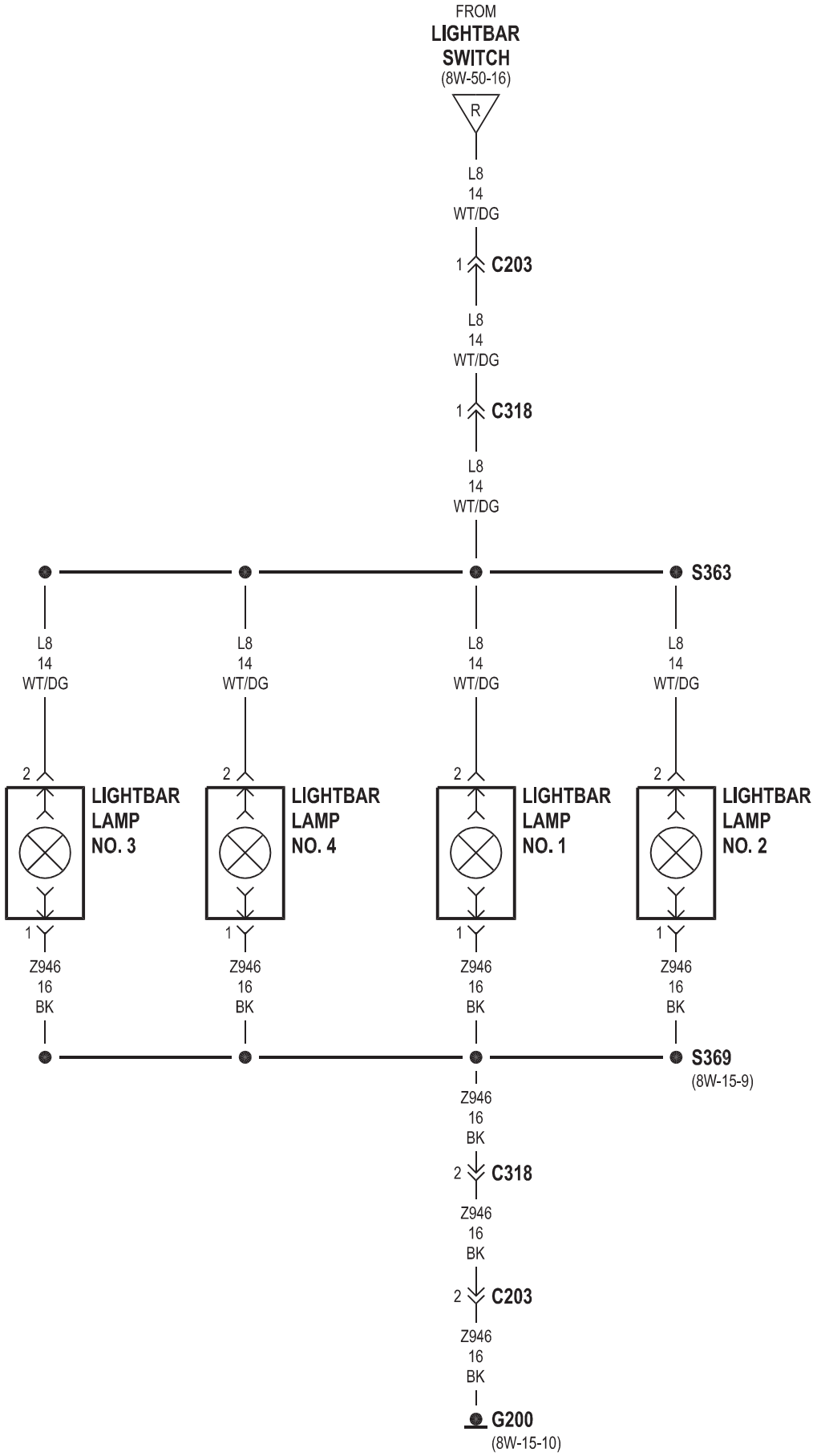
FROM
LIGHTBAR
SWITCH
(8W-50-16)
R
L8
14
WT/DG
1
C203
L8
14
WT/DG
1
C318
L8
14
WT/DG
S363
L8
14
WT/DG
L8
14
WT/DG
L8
14
WT/DG
L8
14
WT/DG
2
LIGHTBAR
LAMP
NO. 3
2
LIGHTBAR
LAMP
NO. 4
2
LIGHTBAR
LAMP
NO. 1
2
LIGHTBAR
LAMP
NO. 2
1
Z946
16
BK
1
Z946
16
BK
1
Z946
16
BK
1
Z946
16
BK
S369
(8W-15-9)
Z946
16
BK
2
C318
Z946
16
BK
2
C203
Z946
16
BK
G200
(8W-15-10)

8W-51 REAR LIGHTING

Component	Page
Back-Up Lamp Switch	8W-51-3
Body Control Module	8W-51-2, 5
Brake Lamp Switch	8W-51-4
Center High Mounted Stop Lamp	8W-51-4
Fuse 2	8W-51-5
Fuse 7	8W-51-2
Fuse 9	8W-51-2
Fuse 39	8W-51-3
G202	8W-51-2
G303	8W-51-3, 4
G304	8W-51-2, 3, 4, 5
Instrument Cluster	8W-51-4, 5
Junction Block	8W-51-2, 3, 4, 5
Left Tail/Stop Lamp	8W-51-2, 3, 4, 5
License Lamp	8W-51-2, 3
Park Lamp Relay	8W-51-2
Rear Fog Lamp Relay	8W-51-5
Right Tail/Stop Lamp	8W-51-2, 4, 5
Trailer Tow Left Turn Relay	8W-51-4
Trailer Tow Right Turn Relay	8W-51-4
Transmission Range Sensor	8W-51-3
Transmission Solenoid/TRS Assembly	8W-51-3

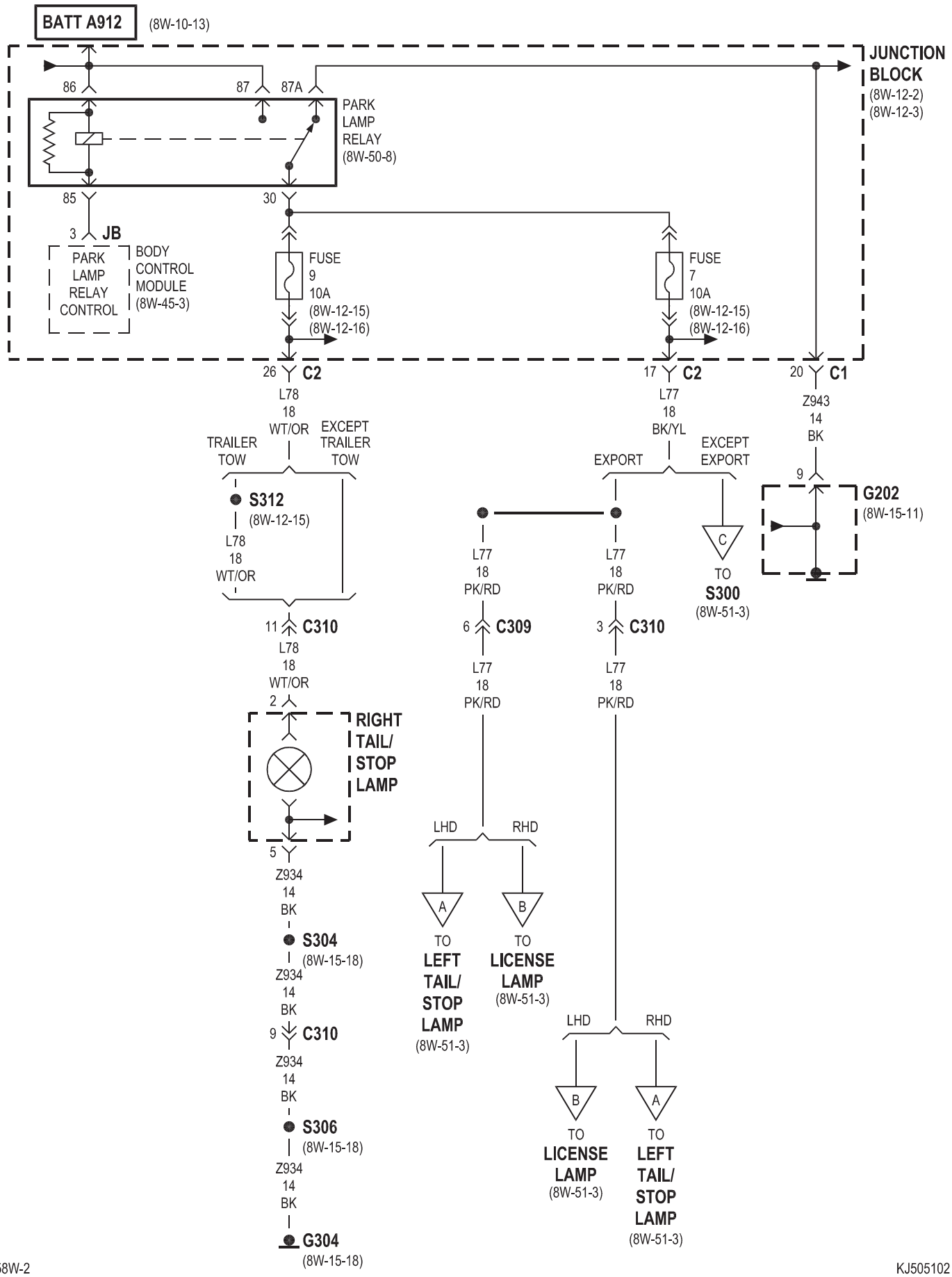
BATT A912
(8W-10-13)
JUNCTION BLOCK
(8W-12-2)
(8W-12-3)
86
87
87A
PARK LAMP RELAY
(8W-50-8)
85
30
3
JB
PARK LAMP RELAY CONTROL
BODY CONTROL MODULE
(8W-45-3)
FUSE 9 10A
(8W-12-15)
(8W-12-16)
FUSE 7 10A
(8W-12-15)
(8W-12-16)
26
C2
17
C2
20
C1
L78 18 WT/OR
L77 18 BK/YL
Z943 14 BK
TRAILER TOW
EXCEPT TRAILER TOW
EXPORT
EXCEPT EXPORT
9
G202
(8W-15-11)
S312
(8W-12-15)
L78 18 WT/OR
L77 18 PK/RD
L77 18 PK/RD
C
TO S300
(8W-51-3)
11
C310
6
C309
3
C310
L78 18 WT/OR
L77 18 PK/RD
L77 18 PK/RD
2
RIGHT TAIL/ STOP LAMP
LHD
RHD
5
Z934 14 BK
A
B
TO LEFT TAIL/ STOP LAMP
(8W-51-3)
TO LICENSE LAMP
(8W-51-3)
S304
(8W-15-18)
Z934 14 BK
9
C310
LHD
RHD
Z934 14 BK
B
A
TO LICENSE LAMP
(8W-51-3)
TO LEFT TAIL/ STOP LAMP
(8W-51-3)
S306
(8W-15-18)
Z934 14 BK
G304
(8W-15-18)

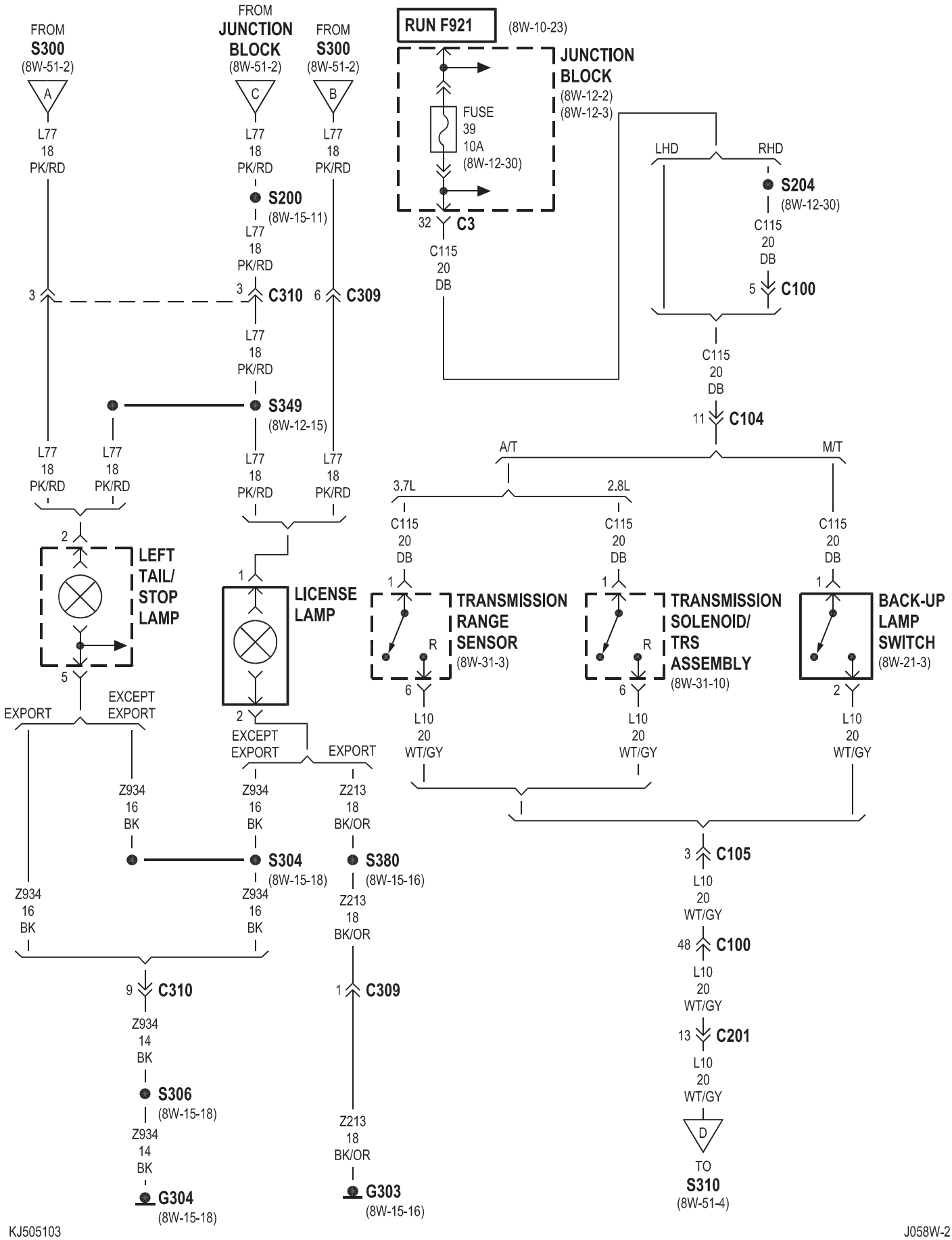

KJ505103

J058W-2

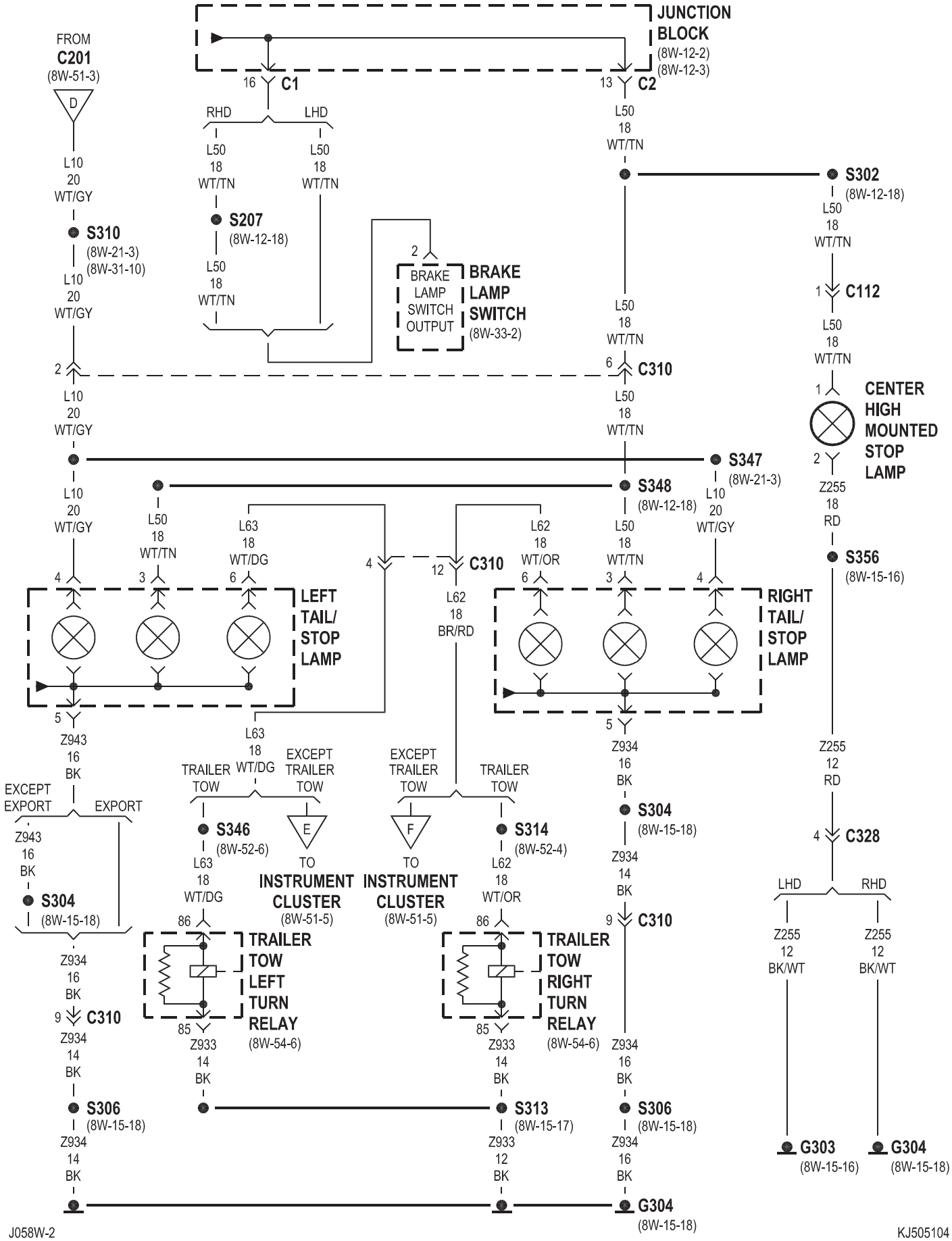
JUNCTION BLOCK
(8W-12-2)
(8W-12-3)
FROM C201 (8W-51-3)
D
16 C1
13 C2
RHD
LHD
L50 18 WT/TN
L10 20 WT/GY
S310 (8W-21-3) (8W-31-10)
S207 (8W-12-18)
BRAKE LAMP SWITCH OUTPUT
BRAKE LAMP SWITCH (8W-33-2)
S302 (8W-12-18)
C112
C310
CENTER HIGH MOUNTED STOP LAMP
S347 (8W-21-3)
S348 (8W-12-18)
L63 18 WT/DG
L62 18 WT/OR
L62 18 BR/RD
LEFT TAIL/ STOP LAMP
RIGHT TAIL/ STOP LAMP
Z255 18 RD
S356 (8W-15-16)
Z943 16 BK
Z934 16 BK
Z255 12 RD
EXCEPT EXPORT
EXPORT
TRAILER TOW
EXCEPT TRAILER TOW
S346 (8W-52-6)
S314 (8W-52-4)
E
F
TO INSTRUMENT CLUSTER (8W-51-5)
S304 (8W-15-18)
Z934 14 BK
C328
Z934 16 BK
TRAILER TOW LEFT TURN RELAY (8W-54-6)
TRAILER TOW RIGHT TURN RELAY (8W-54-6)
Z933 14 BK
Z255 12 BK/WT
S306 (8W-15-18)
S313 (8W-15-17)
Z933 12 BK
G303 (8W-15-16)
G304 (8W-15-18)
J058W-2
KJ505104

EXPORT

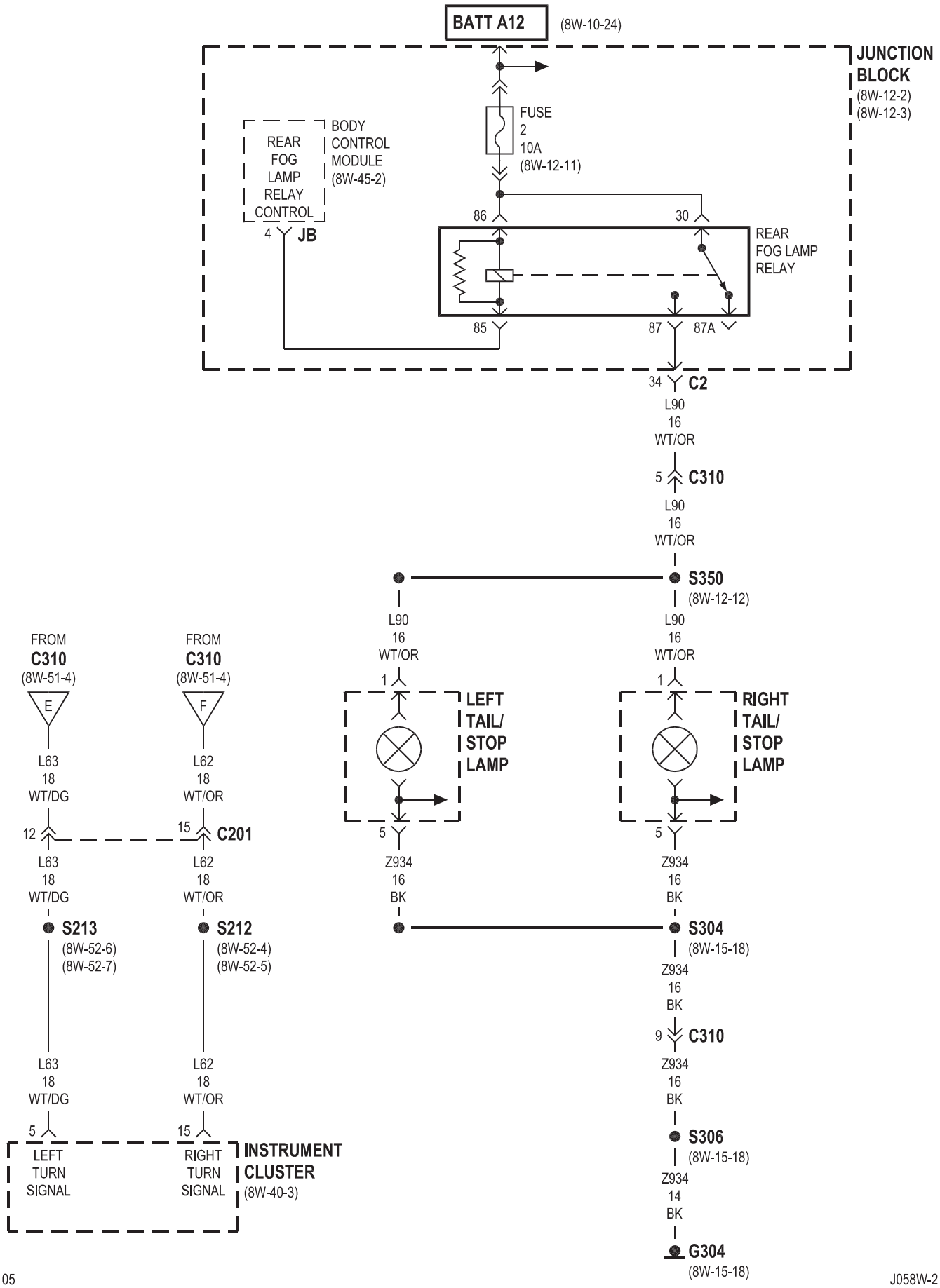
BATT A12
(8W-10-24)
JUNCTION BLOCK
(8W-12-2)
(8W-12-3)
FUSE
2
10A
(8W-12-11)
REAR FOG LAMP RELAY CONTROL
BODY CONTROL MODULE
(8W-45-2)
4
JB
86
30
REAR FOG LAMP RELAY
85
87
87A
34
C2
L90
16
WT/OR
5
C310
L90
16
WT/OR
S350
(8W-12-12)
L90
16
WT/OR
L90
16
WT/OR
FROM
C310
(8W-51-4)
E
FROM
C310
(8W-51-4)
F
1
LEFT TAIL/ STOP LAMP
1
RIGHT TAIL/ STOP LAMP
L63
18
WT/DG
L62
18
WT/OR
12
15
C201
5
5
L63
18
WT/DG
L62
18
WT/OR
Z934
16
BK
Z934
16
BK
S213
(8W-52-6)
(8W-52-7)
S212
(8W-52-4)
(8W-52-5)
S304
(8W-15-18)
Z934
16
BK
9
C310
Z934
16
BK
L63
18
WT/DG
L62
18
WT/OR
5
15
S306
(8W-15-18)
Z934
14
BK
LEFT TURN SIGNAL
RIGHT TURN SIGNAL
INSTRUMENT CLUSTER
(8W-40-3)
G304
(8W-15-18)

8W-52 TURN SIGNALS

Component	Page
Body Control Module	8W-52-2, 3
Fuse 7	8W-52-3
Fuse 9	8W-52-3
Fuse 11	8W-52-2
Fuse 39	8W-52-2
G111	8W-52-4, 5, 7
G202	8W-52-2, 3
G304	8W-52-4, 5, 6, 7
Hazard Switch/Combination Flasher	8W-52-2, 4, 5, 6, 7
Instrument Cluster	8W-52-2, 4, 5, 6, 7
Junction Block	8W-52-2, 3
Left Front Park/Turn Signal Lamp	8W-52-6, 7
Left Side Marker Lamp	8W-52-6
Left Tail/Stop Lamp	8W-52-6, 7
Multi-Function Switch	8W-52-2
Park Lamp Relay	8W-52-3
Right Front Park/Turn Signal Lamp	8W-52-4, 5
Right Side Marker Lamp	8W-52-4
Right Tail/Stop Lamp	8W-52-4, 5
Trailer Tow Left Turn Relay	8W-52-6
Trailer Tow Right Turn Relay	8W-52-4

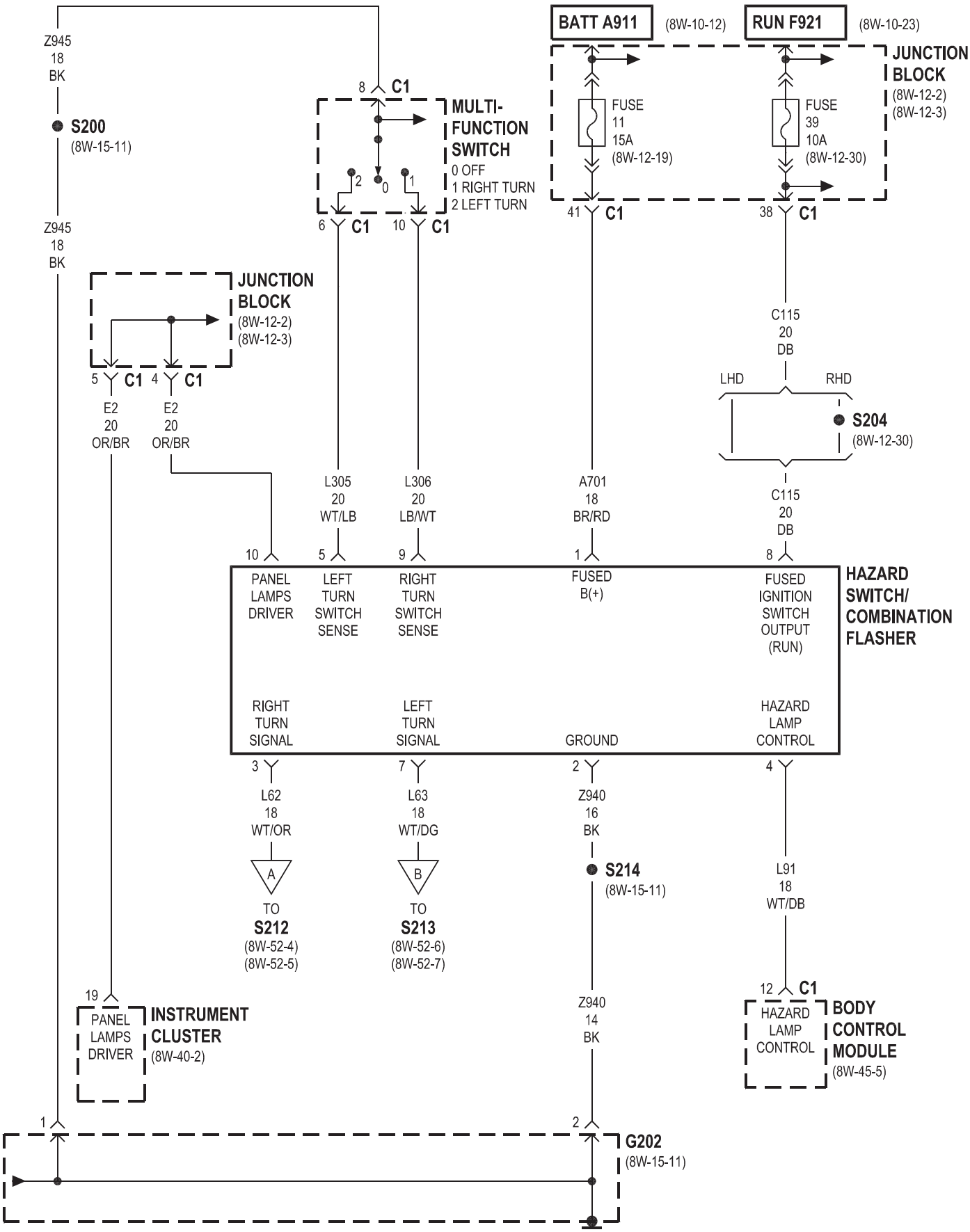
BATT A911
(8W-10-12)
RUN F921
(8W-10-23)
JUNCTION BLOCK
(8W-12-2)
(8W-12-3)
FUSE 11 15A (8W-12-19)
FUSE 39 10A (8W-12-30)
Z945 18 BK
S200
(8W-15-11)
8 C1
MULTI-FUNCTION SWITCH
0 OFF
1 RIGHT TURN
2 LEFT TURN
6 C1
10 C1
41 C1
38 C1
JUNCTION BLOCK
(8W-12-2)
(8W-12-3)
5 C1
4 C1
E2 20 OR/BR
E2 20 OR/BR
C115 20 DB
LHD
RHD
S204
(8W-12-30)
L305 20 WT/LB
L306 20 LB/WT
A701 18 BR/RD
C115 20 DB
10
5
9
1
8
PANEL LAMPS DRIVER
LEFT TURN SWITCH SENSE
RIGHT TURN SWITCH SENSE
FUSED B(+)
FUSED IGNITION SWITCH OUTPUT (RUN)
HAZARD SWITCH/ COMBINATION FLASHER
RIGHT TURN SIGNAL
LEFT TURN SIGNAL
GROUND
HAZARD LAMP CONTROL
3
7
2
4
L62 18 WT/OR
L63 18 WT/DG
Z940 16 BK
S214
(8W-15-11)
L91 18 WT/DB
A
B
TO S212
(8W-52-4)
(8W-52-5)
TO S213
(8W-52-6)
(8W-52-7)
19
PANEL LAMPS DRIVER
INSTRUMENT CLUSTER
(8W-40-2)
Z940 14 BK
12 C1
HAZARD LAMP CONTROL
BODY CONTROL MODULE
(8W-45-5)
1
2
G202
(8W-15-11)

EXCEPT EXPORT

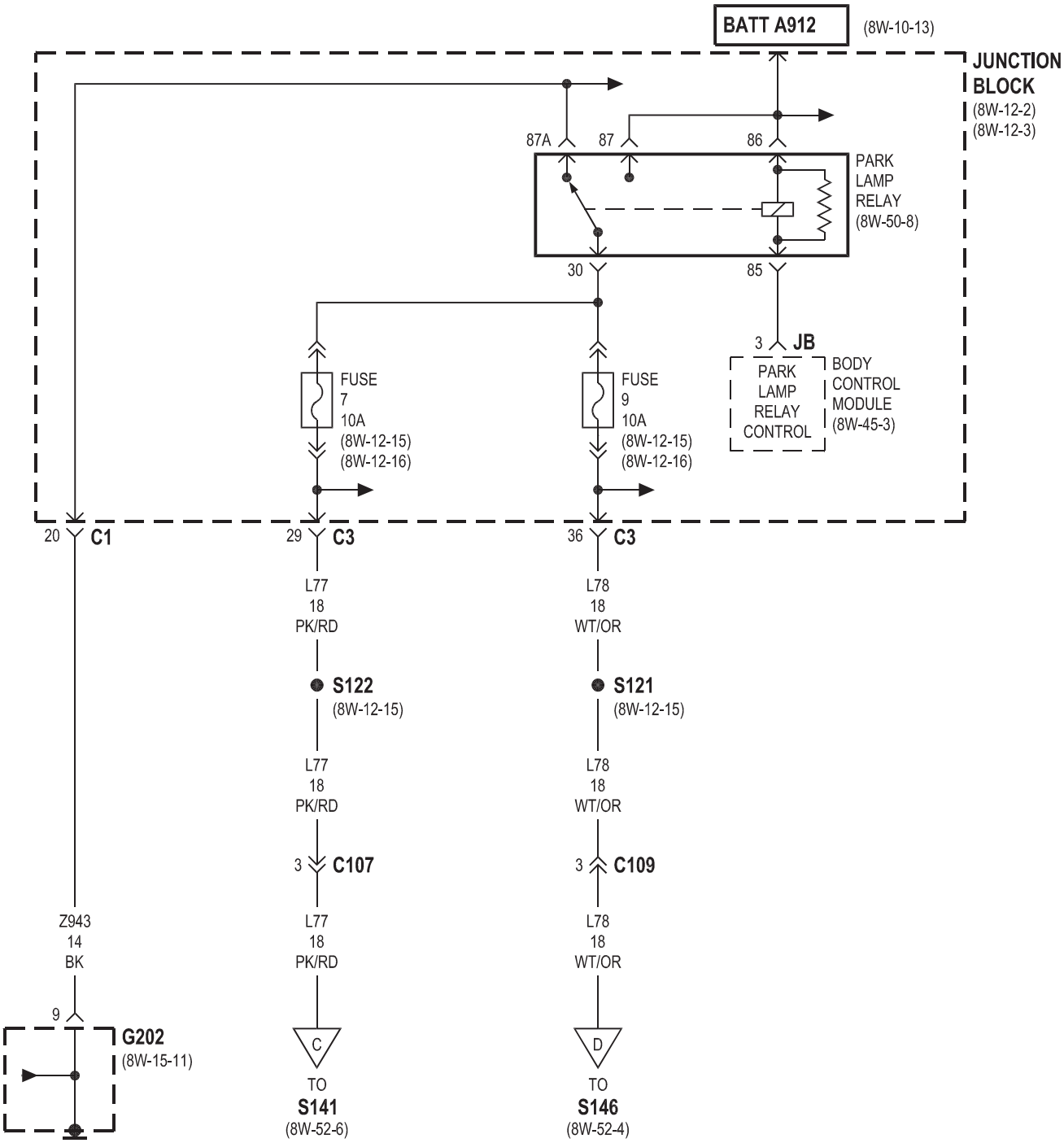

EXCEPT EXPORT

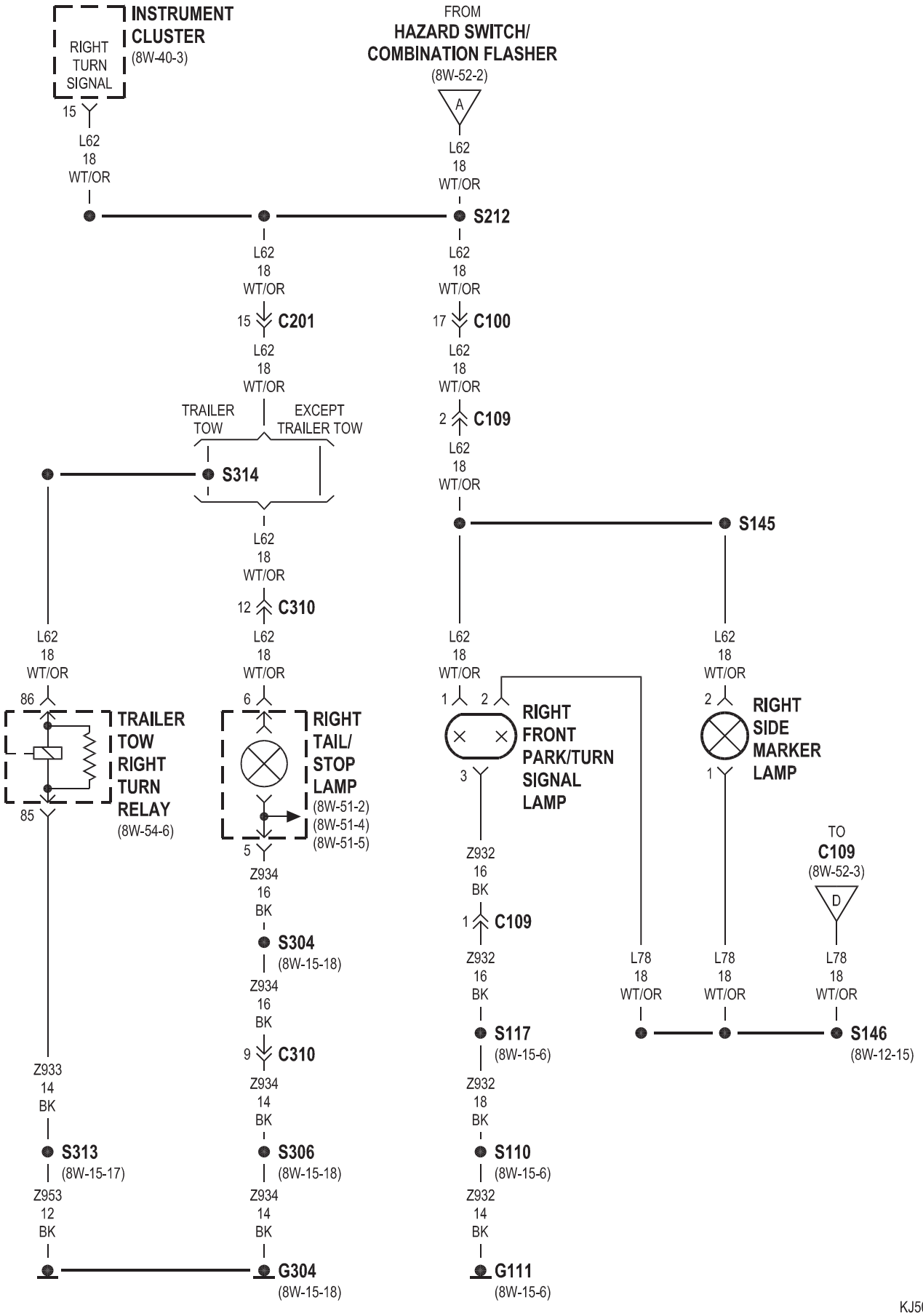

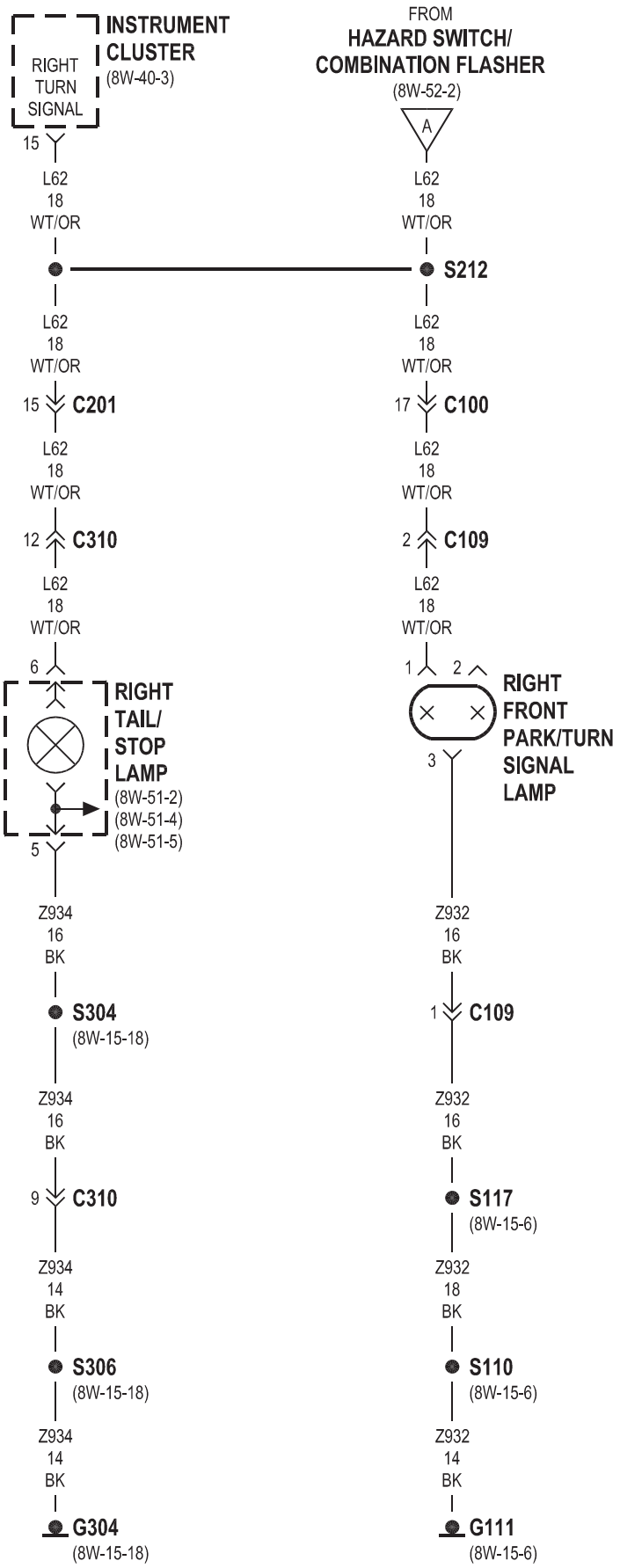
INSTRUMENT CLUSTER
(8W-40-3)
RIGHT TURN SIGNAL
15
L62 18 WT/OR
FROM
HAZARD SWITCH/ COMBINATION FLASHER
(8W-52-2)
A
L62 18 WT/OR
S212
L62 18 WT/OR
15 C201
L62 18 WT/OR
12 C310
L62 18 WT/OR
6
RIGHT TAIL/ STOP LAMP
(8W-51-2)
(8W-51-4)
(8W-51-5)
5
Z934 16 BK
S304
(8W-15-18)
Z934 16 BK
9 C310
Z934 14 BK
S306
(8W-15-18)
Z934 14 BK
G304
(8W-15-18)
L62 18 WT/OR
17 C100
L62 18 WT/OR
2 C109
L62 18 WT/OR
1 2
RIGHT FRONT PARK/TURN SIGNAL LAMP
3
Z932 16 BK
1 C109
Z932 16 BK
S117
(8W-15-6)
Z932 18 BK
S110
(8W-15-6)
Z932 14 BK
G111
(8W-15-6)

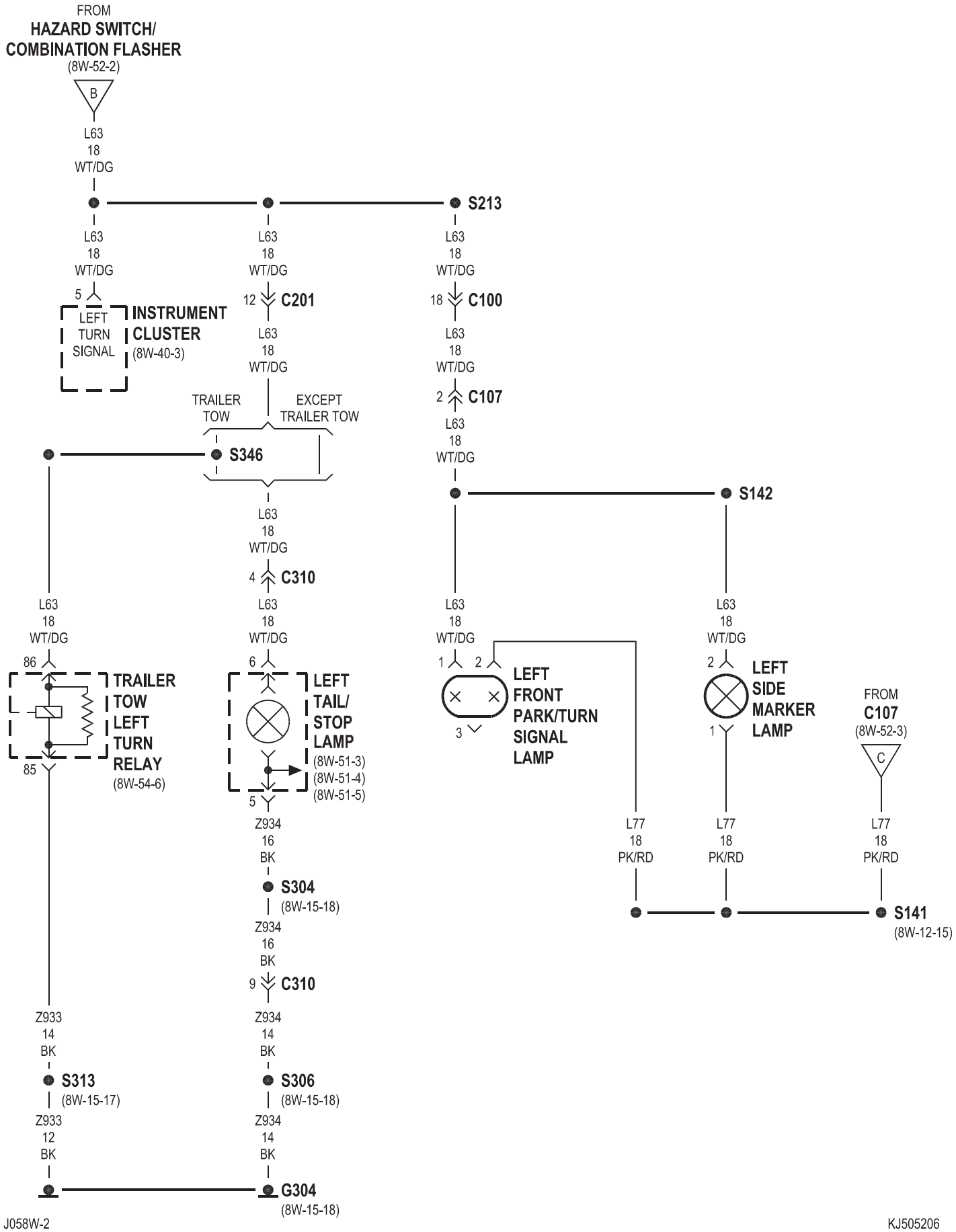
FROM
HAZARD SWITCH/
COMBINATION FLASHER
(8W-52-2)
B
L63
18
WT/DG
S213
5
LEFT
TURN
SIGNAL
INSTRUMENT
CLUSTER
(8W-40-3)
12
C201
18
C100
2
C107
TRAILER
TOW
EXCEPT
TRAILER TOW
S346
S142
4
C310
86
TRAILER
TOW
LEFT
TURN
RELAY
(8W-54-6)
85
6
LEFT
TAIL/
STOP
LAMP
(8W-51-3)
(8W-51-4)
(8W-51-5)
5
1
2
3
LEFT
FRONT
PARK/TURN
SIGNAL
LAMP
LEFT
SIDE
MARKER
LAMP
FROM
C107
(8W-52-3)
C
Z934
16
BK
S304
(8W-15-18)
9
C310
Z933
14
BK
S313
(8W-15-17)
Z933
12
BK
S306
(8W-15-18)
G304
(8W-15-18)
L77
18
PK/RD
S141
(8W-12-15)

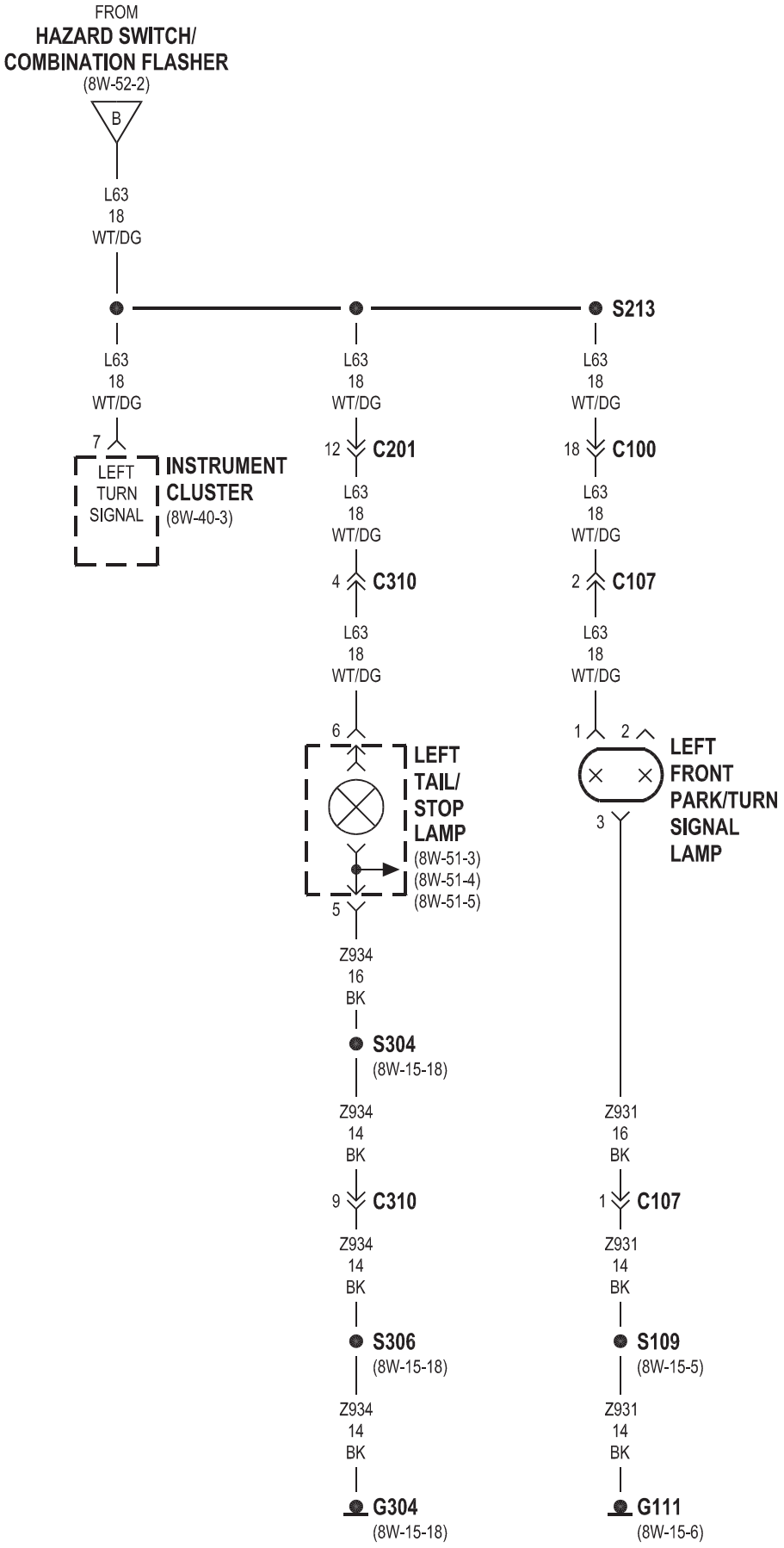
FROM
HAZARD SWITCH/
COMBINATION FLASHER
(8W-52-2)
B
L63
18
WT/DG
S213
L63
18
WT/DG
7
LEFT
TURN
SIGNAL
INSTRUMENT
CLUSTER
(8W-40-3)
12
C201
18
C100
4
C310
2
C107
6
LEFT
TAIL/
STOP
LAMP
(8W-51-3)
(8W-51-4)
(8W-51-5)
5
1
2
3
LEFT
FRONT
PARK/TURN
SIGNAL
LAMP
Z934
16
BK
S304
(8W-15-18)
Z934
14
BK
9
C310
S306
(8W-15-18)
G304
(8W-15-18)
Z931
16
BK
1
C107
Z931
14
BK
S109
(8W-15-5)
G111
(8W-15-6)

8W-53 WIPERS

Component	Page
Body Control Module	8W-53-2, 3, 4
Circuit Breaker No. 3	8W-53-4
Front Wiper Motor	8W-53-4, 5
Fuse 9	8W-53-3
Fuse 17	8W-53-3
Fuse 32	8W-53-2
G111	8W-53-5
G202	8W-53-2
G303	8W-53-3
Instrument Cluster	8W-53-5
Junction Block	8W-53-2, 3, 4
Multi-Function Switch	8W-53-2, 3, 4
Power Distribution Center	8W-53-3, 4, 5
Rear Wiper Motor	8W-53-3
Tailgate Flip-Up Ajar Switch	8W-53-3
Washer Fluid Level Switch	8W-53-5
Washer Pump	8W-53-2
Wiper High/Low Relay	8W-53-4
Wiper On/Off Relay	8W-53-4

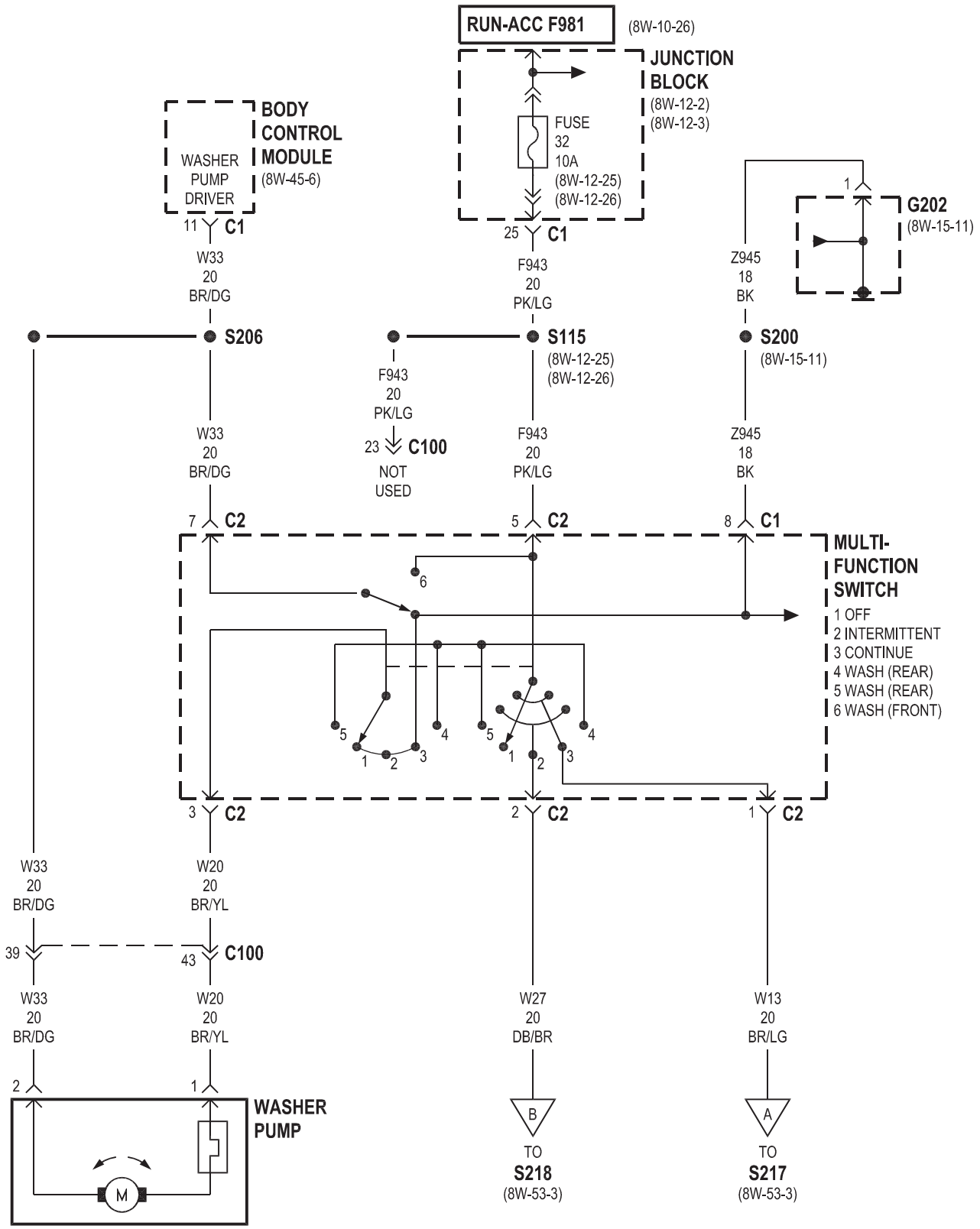
RUN-ACC F981
(8W-10-26)
JUNCTION BLOCK
(8W-12-2)
(8W-12-3)
FUSE 32 10A
(8W-12-25)
(8W-12-26)
BODY CONTROL MODULE
(8W-45-6)
WASHER PUMP DRIVER
11 C1
25 C1
W33 20 BR/DG
F943 20 PK/LG
Z945 18 BK
G202
(8W-15-11)
S206
S115
(8W-12-25)
(8W-12-26)
S200
(8W-15-11)
F943 20 PK/LG
23 C100
NOT USED
W33 20 BR/DG
F943 20 PK/LG
Z945 18 BK
7 C2
5 C2
8 C1
MULTI-FUNCTION SWITCH
1 OFF
2 INTERMITTENT
3 CONTINUE
4 WASH (REAR)
5 WASH (REAR)
6 WASH (FRONT)
3 C2
2 C2
1 C2
W33 20 BR/DG
W20 20 BR/YL
39
43 C100
W33 20 BR/DG
W20 20 BR/YL
W27 20 DB/BR
W13 20 BR/LG
2
1
WASHER PUMP
M
B
A
TO S218
(8W-53-3)
TO S217
(8W-53-3)

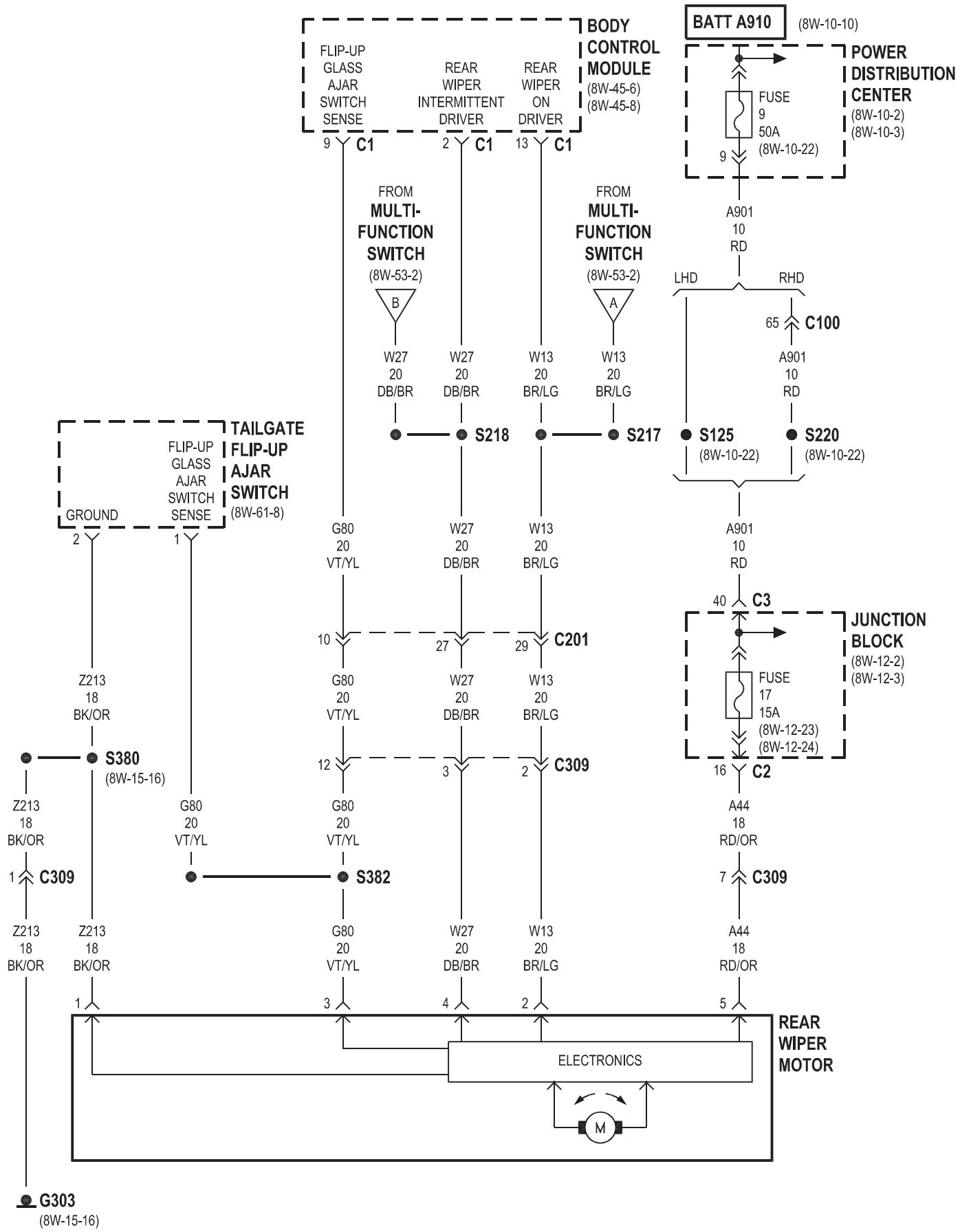
BODY CONTROL MODULE
(8W-45-6)
(8W-45-8)
FLIP-UP GLASS AJAR SWITCH SENSE
REAR WIPER INTERMITTENT DRIVER
REAR WIPER ON DRIVER
9 C1
2 C1
13 C1
BATT A910
(8W-10-10)
POWER DISTRIBUTION CENTER
(8W-10-2)
(8W-10-3)
FUSE 9 50A
(8W-10-22)
A901 10 RD
FROM MULTI-FUNCTION SWITCH
(8W-53-2)
B
A
LHD
RHD
65 C100
W27 20 DB/BR
W27 20 DB/BR
W13 20 BR/LG
W13 20 BR/LG
A901 10 RD
S218
S217
S125
(8W-10-22)
S220
(8W-10-22)
TAILGATE FLIP-UP AJAR SWITCH
(8W-61-8)
GROUND
FLIP-UP GLASS AJAR SWITCH SENSE
2
1
G80 20 VT/YL
W27 20 DB/BR
W13 20 BR/LG
A901 10 RD
40 C3
JUNCTION BLOCK
(8W-12-2)
(8W-12-3)
FUSE 17 15A
(8W-12-23)
(8W-12-24)
10
27
29 C201
Z213 18 BK/OR
G80 20 VT/YL
W27 20 DB/BR
W13 20 BR/LG
S380
(8W-15-16)
12
3
2 C309
16 C2
Z213 18 BK/OR
G80 20 VT/YL
G80 20 VT/YL
A44 18 RD/OR
1 C309
S382
7 C309
Z213 18 BK/OR
Z213 18 BK/OR
G80 20 VT/YL
W27 20 DB/BR
W13 20 BR/LG
A44 18 RD/OR
1
3
4
2
5
REAR WIPER MOTOR
ELECTRONICS
M
G303
(8W-15-16)

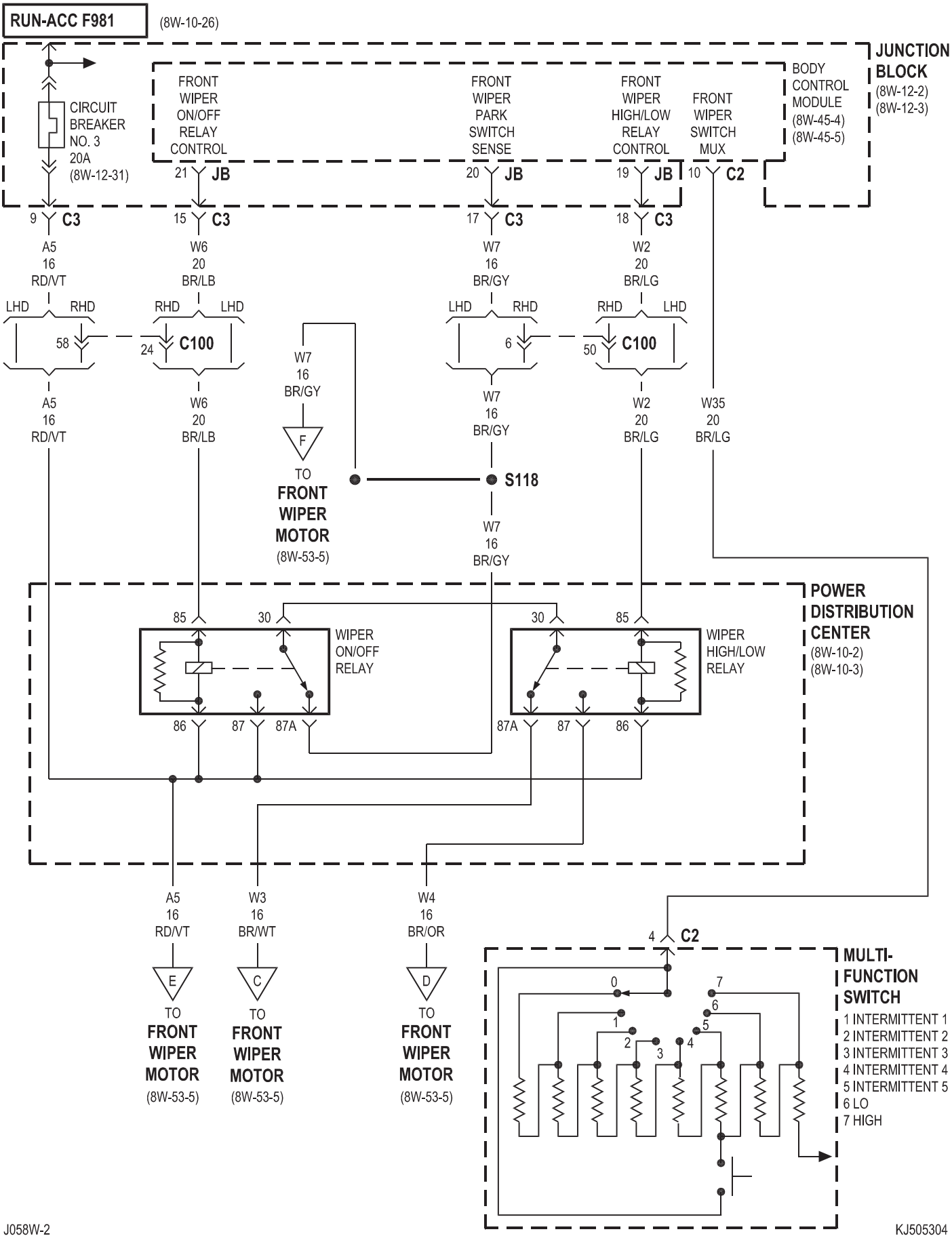
RUN-ACC F981
(8W-10-26)
JUNCTION BLOCK
(8W-12-2)
(8W-12-3)
CIRCUIT BREAKER NO. 3 20A (8W-12-31)
FRONT WIPER ON/OFF RELAY CONTROL
FRONT WIPER PARK SWITCH SENSE
FRONT WIPER HIGH/LOW RELAY CONTROL
FRONT WIPER SWITCH MUX
BODY CONTROL MODULE
(8W-45-4)
(8W-45-5)
21 JB
20 JB
19 JB
10 C2
9 C3
15 C3
17 C3
18 C3
A5 16 RD/VT
W6 20 BR/LB
W7 16 BR/GY
W2 20 BR/LG
LHD
RHD
58
24 C100
6
50 C100
W7 16 BR/GY
F
TO FRONT WIPER MOTOR
(8W-53-5)
S118
W35 20 BR/LG
POWER DISTRIBUTION CENTER
(8W-10-2)
(8W-10-3)
85
30
WIPER ON/OFF RELAY
WIPER HIGH/LOW RELAY
86
87
87A
A5 16 RD/VT
W3 16 BR/WT
W4 16 BR/OR
E
C
D
TO FRONT WIPER MOTOR
(8W-53-5)
4 C2
MULTI-FUNCTION SWITCH
1 INTERMITTENT 1
2 INTERMITTENT 2
3 INTERMITTENT 3
4 INTERMITTENT 4
5 INTERMITTENT 5
6 LO
7 HIGH
0
1
2
3
4
5
6
7

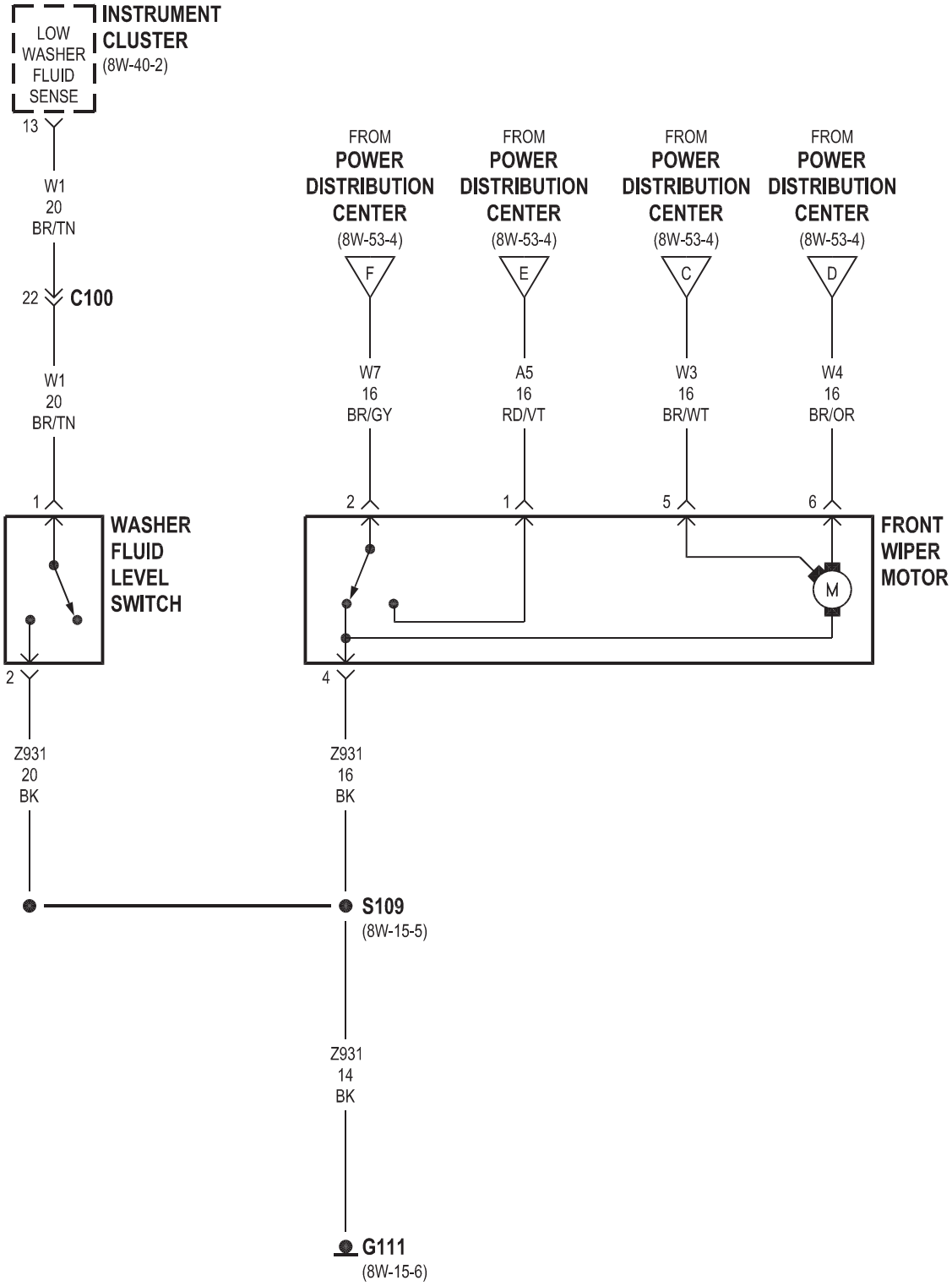
LOW WASHER FLUID SENSE
INSTRUMENT CLUSTER
(8W-40-2)
13
W1
20
BR/TN
22
C100
W1
20
BR/TN
1
WASHER FLUID LEVEL SWITCH
2
Z931
20
BK
FROM
POWER DISTRIBUTION CENTER
(8W-53-4)
F
W7
16
BR/GY
FROM
POWER DISTRIBUTION CENTER
(8W-53-4)
E
A5
16
RD/VT
FROM
POWER DISTRIBUTION CENTER
(8W-53-4)
C
W3
16
BR/WT
FROM
POWER DISTRIBUTION CENTER
(8W-53-4)
D
W4
16
BR/OR
2
1
5
6
M
FRONT WIPER MOTOR
4
Z931
16
BK
S109
(8W-15-5)
Z931
14
BK
G111
(8W-15-6)

8W-54 TRAILER TOW

Component	Page
Back-Up Lamp Switch	8W-54-3
Body Control Module	8W-54-2
Brake Lamp Switch	8W-54-4
Electric Brake Provision	8W-54-3
Fuse 9	8W-54-2
Fuse 10	8W-54-5
Fuse 19	8W-54-4
Fuse 25	8W-54-5
G202	8W-54-2
G304	8W-54-6
Hazard Switch/Combination Flasher	8W-54-4
Junction Block	8W-54-2, 4, 5, 6
Park Lamp Relay	8W-54-2
Power Distribution Center	8W-54-5
Trailer Tow Brake Lamp Relay	8W-54-4, 6
Trailer Tow Connector	8W-54-2, 3, 5, 6
Trailer Tow Left Turn Relay	8W-54-4, 6
Trailer Tow Relay	8W-54-5, 6
Trailer Tow Right Turn Relay	8W-54-4, 6
Transmission Range Sensor	8W-54-3
Transmission Solenoid/TRS Assembly	8W-54-3

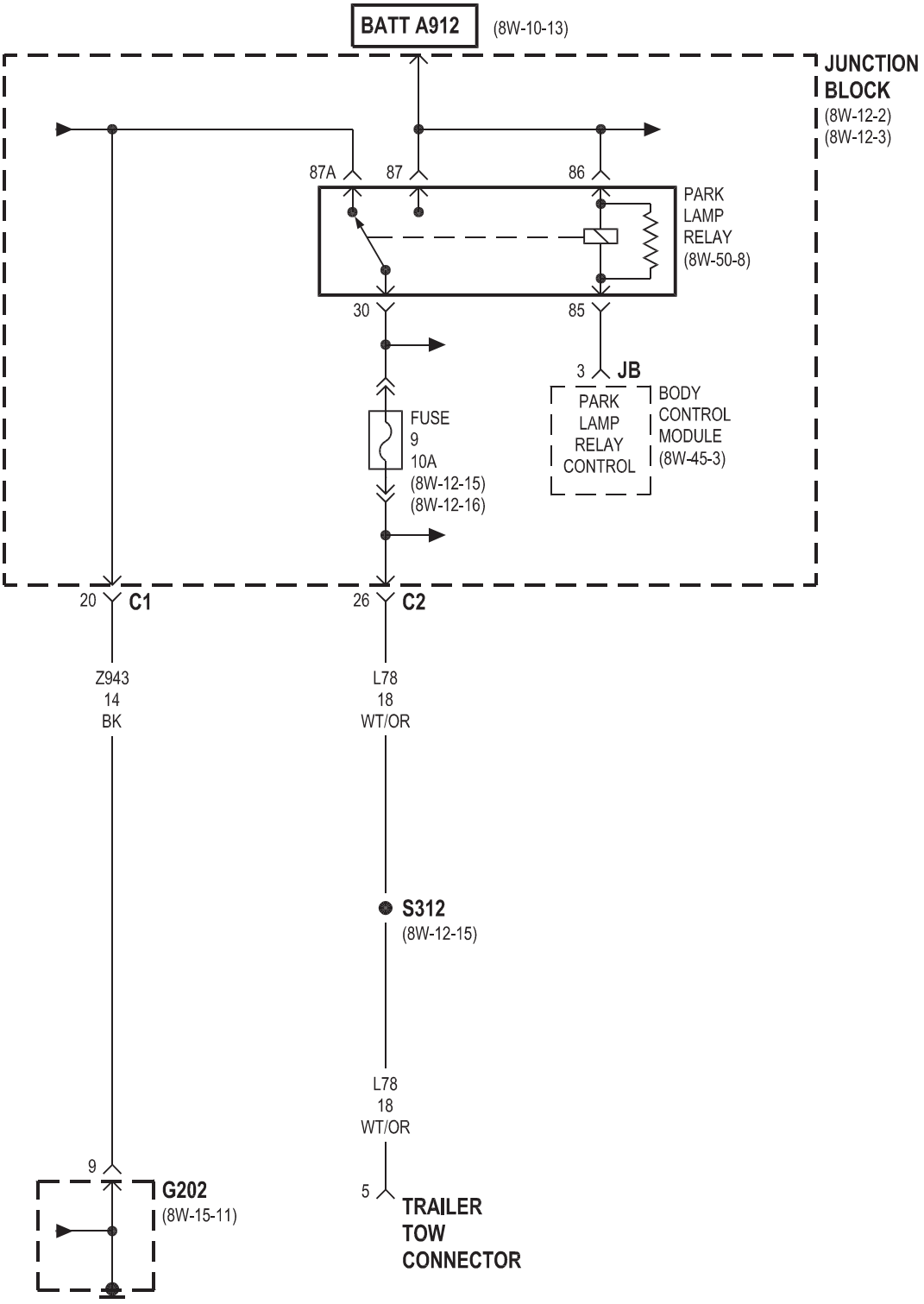
BATT A912
(8W-10-13)
JUNCTION BLOCK
(8W-12-2)
(8W-12-3)
87A
87
86
PARK LAMP RELAY
(8W-50-8)
30
85
3
JB
PARK LAMP RELAY CONTROL
BODY CONTROL MODULE
(8W-45-3)
FUSE
9
10A
(8W-12-15)
(8W-12-16)
20
C1
26
C2
Z943
14
BK
L78
18
WT/OR
S312
(8W-12-15)
L78
18
WT/OR
9
G202
(8W-15-11)
5
TRAILER TOW CONNECTOR

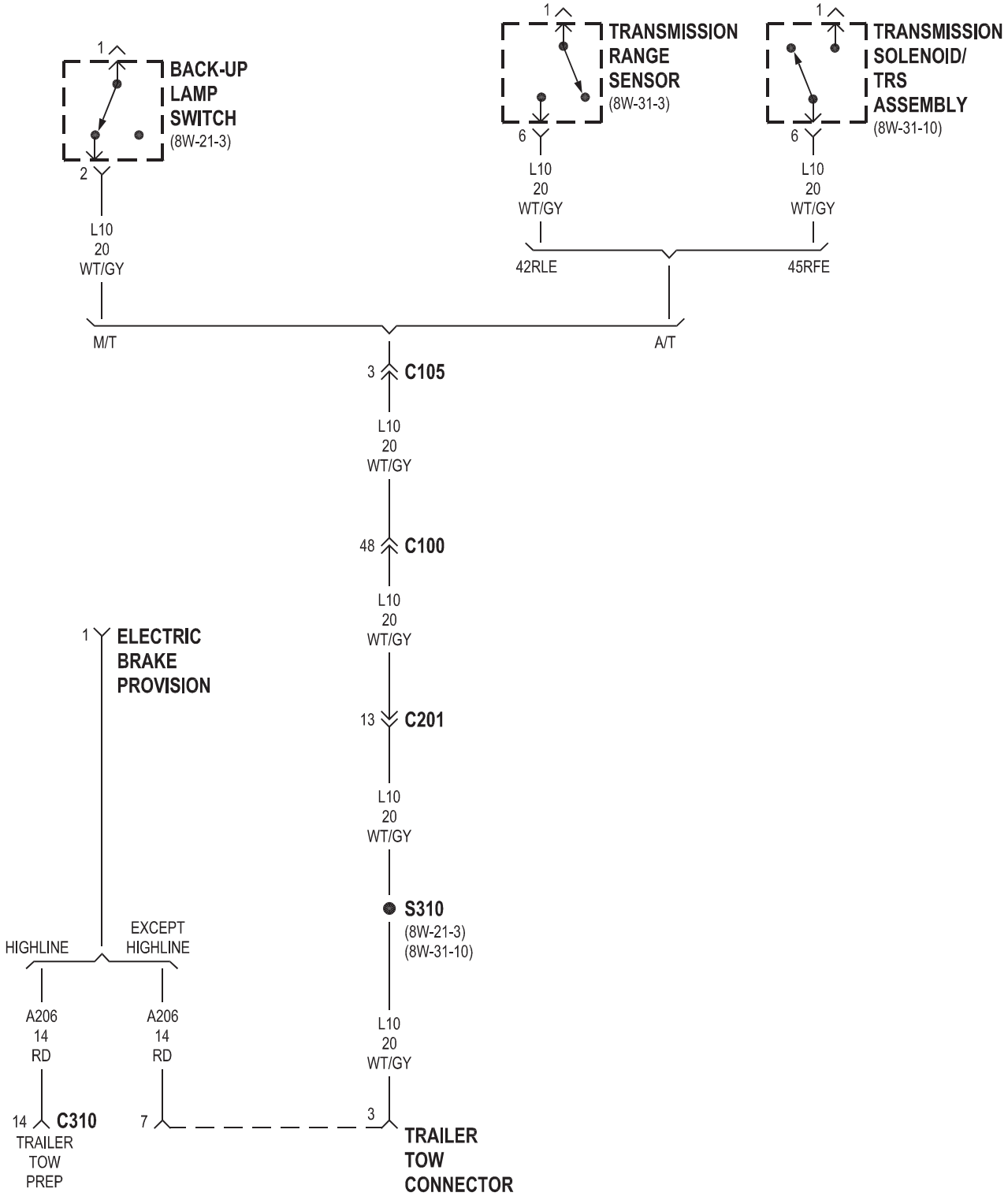
BACK-UP LAMP SWITCH
(8W-21-3)
1
2
L10
20
WT/GY
TRANSMISSION RANGE SENSOR
(8W-31-3)
1
6
L10
20
WT/GY
42RLE
TRANSMISSION SOLENOID/ TRS ASSEMBLY
(8W-31-10)
1
6
L10
20
WT/GY
45RFE
M/T
A/T
3
C105
L10
20
WT/GY
48
C100
L10
20
WT/GY
1
ELECTRIC BRAKE PROVISION
13
C201
L10
20
WT/GY
S310
(8W-21-3)
(8W-31-10)
HIGHLINE
EXCEPT HIGHLINE
A206
14
RD
A206
14
RD
L10
20
WT/GY
14
C310
TRAILER TOW PREP
7
3
TRAILER TOW CONNECTOR

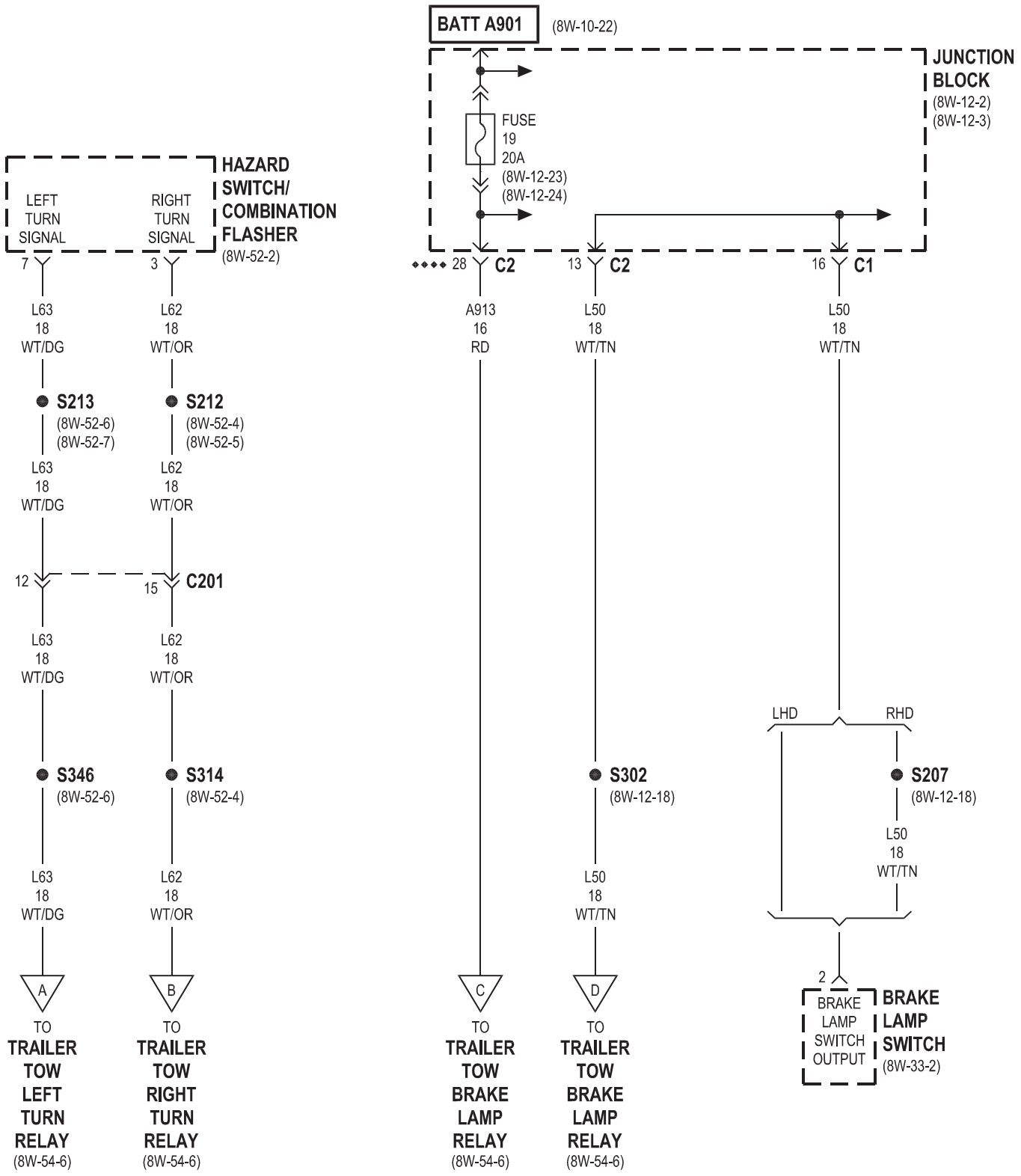

◆◆◆◆ MIDLINE/HIGHLINE

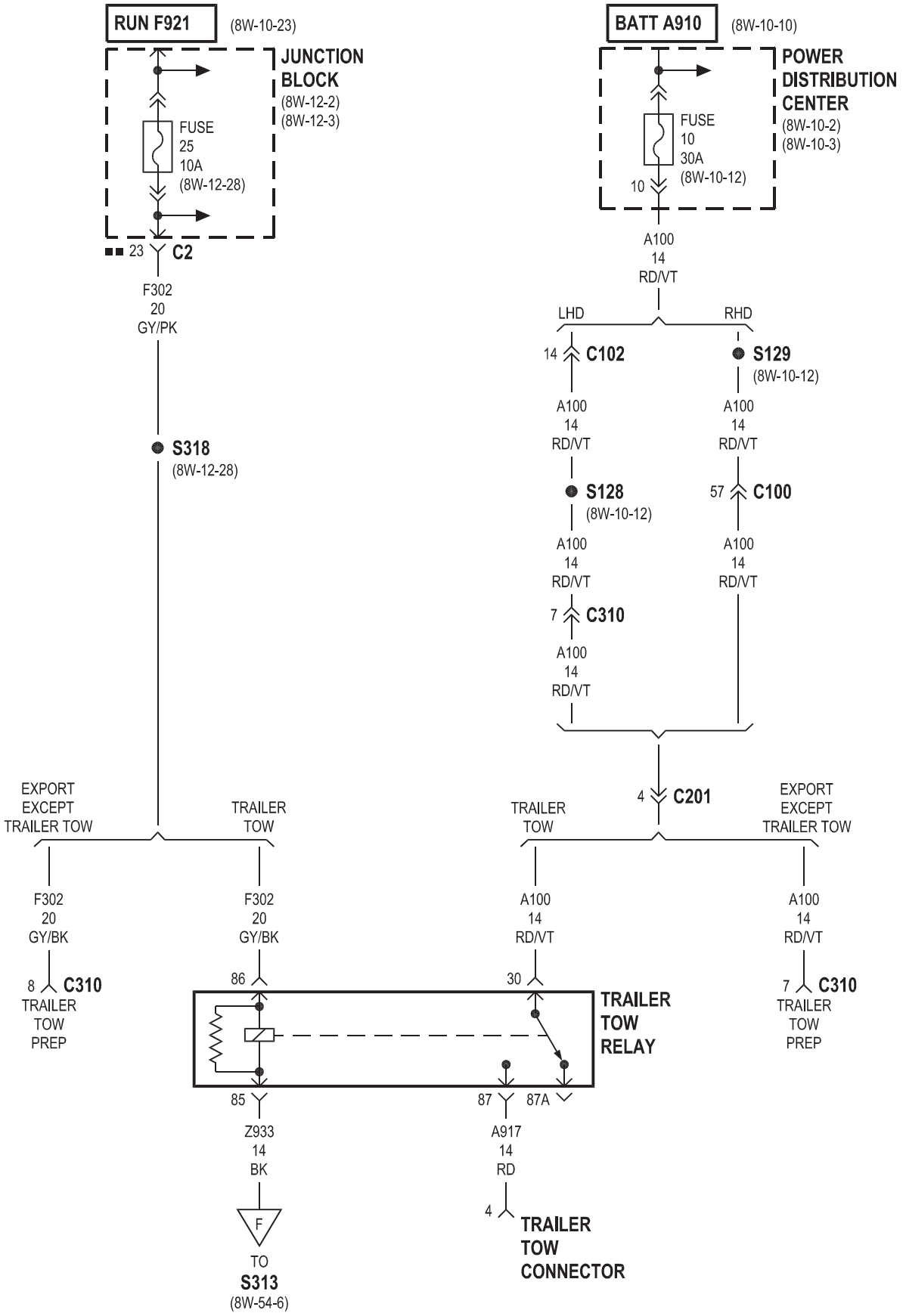

■■ MIDLINE/HIGHLINE

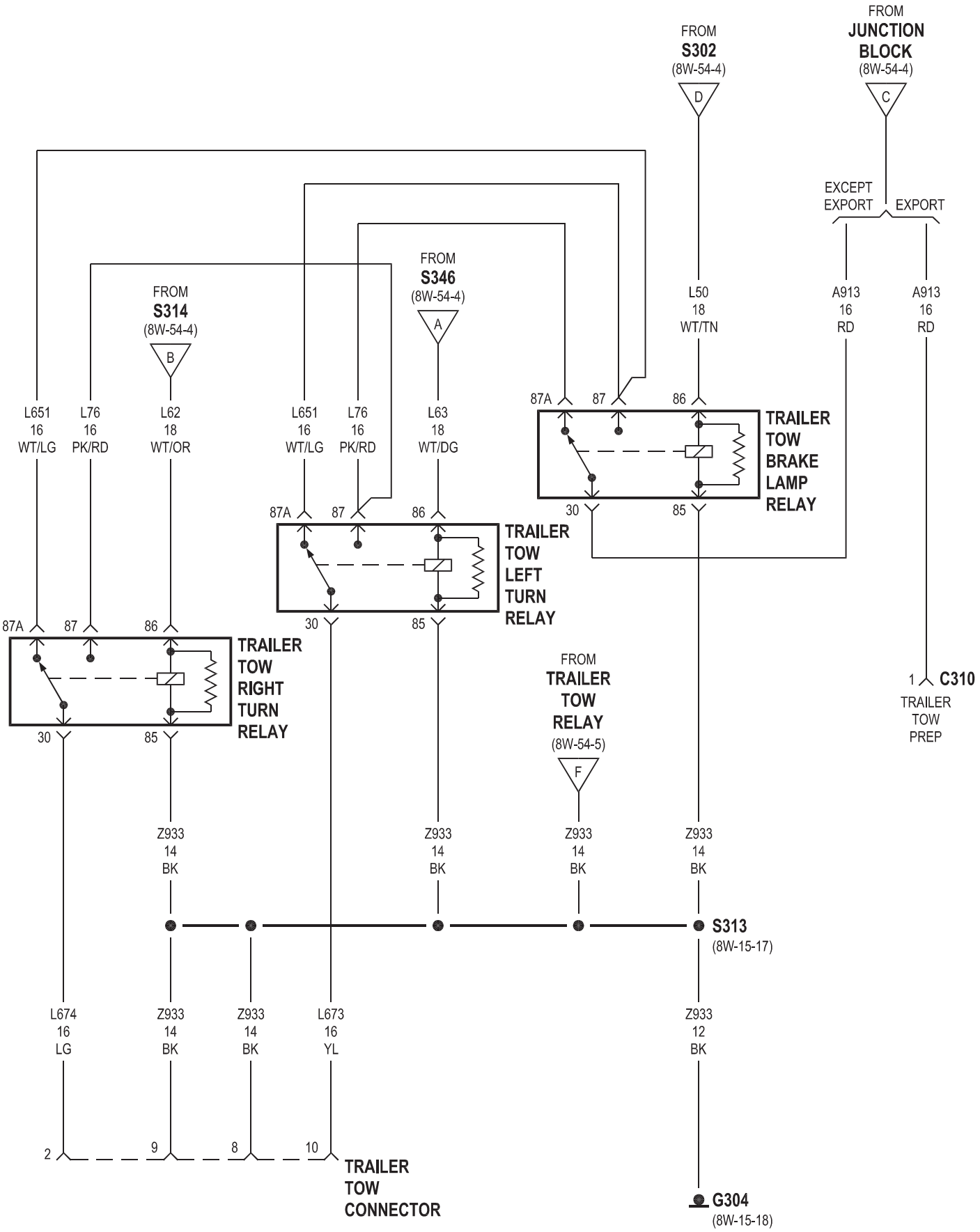
FROM
S302
(8W-54-4)
D
FROM
JUNCTION
BLOCK
(8W-54-4)
C
EXCEPT
EXPORT
EXPORT
FROM
S346
(8W-54-4)
A
FROM
S314
(8W-54-4)
B
L50
18
WT/TN
A913
16
RD
A913
16
RD
L651
16
WT/LG
L76
16
PK/RD
L62
18
WT/OR
L651
16
WT/LG
L76
16
PK/RD
L63
18
WT/DG
87A
87
86
TRAILER
TOW
BRAKE
LAMP
RELAY
30
85
87A
87
86
TRAILER
TOW
LEFT
TURN
RELAY
30
85
87A
87
86
TRAILER
TOW
RIGHT
TURN
RELAY
30
85
FROM
TRAILER
TOW
RELAY
(8W-54-5)
F
1
C310
TRAILER
TOW
PREP
Z933
14
BK
Z933
14
BK
Z933
14
BK
Z933
14
BK
S313
(8W-15-17)
L674
16
LG
Z933
14
BK
Z933
14
BK
L673
16
YL
Z933
12
BK
2
9
8
10
TRAILER
TOW
CONNECTOR
G304
(8W-15-18)

8W-55 NAVIGATION/TELECOMMUNICATIONS

Component	Page
Automatic Day/Night Mirror	8W-55-2
Fuse 34	8W-55-2
G301	8W-55-2
Hands Free Module	8W-55-2, 3
Junction Block	8W-55-2
Radio	8W-55-3

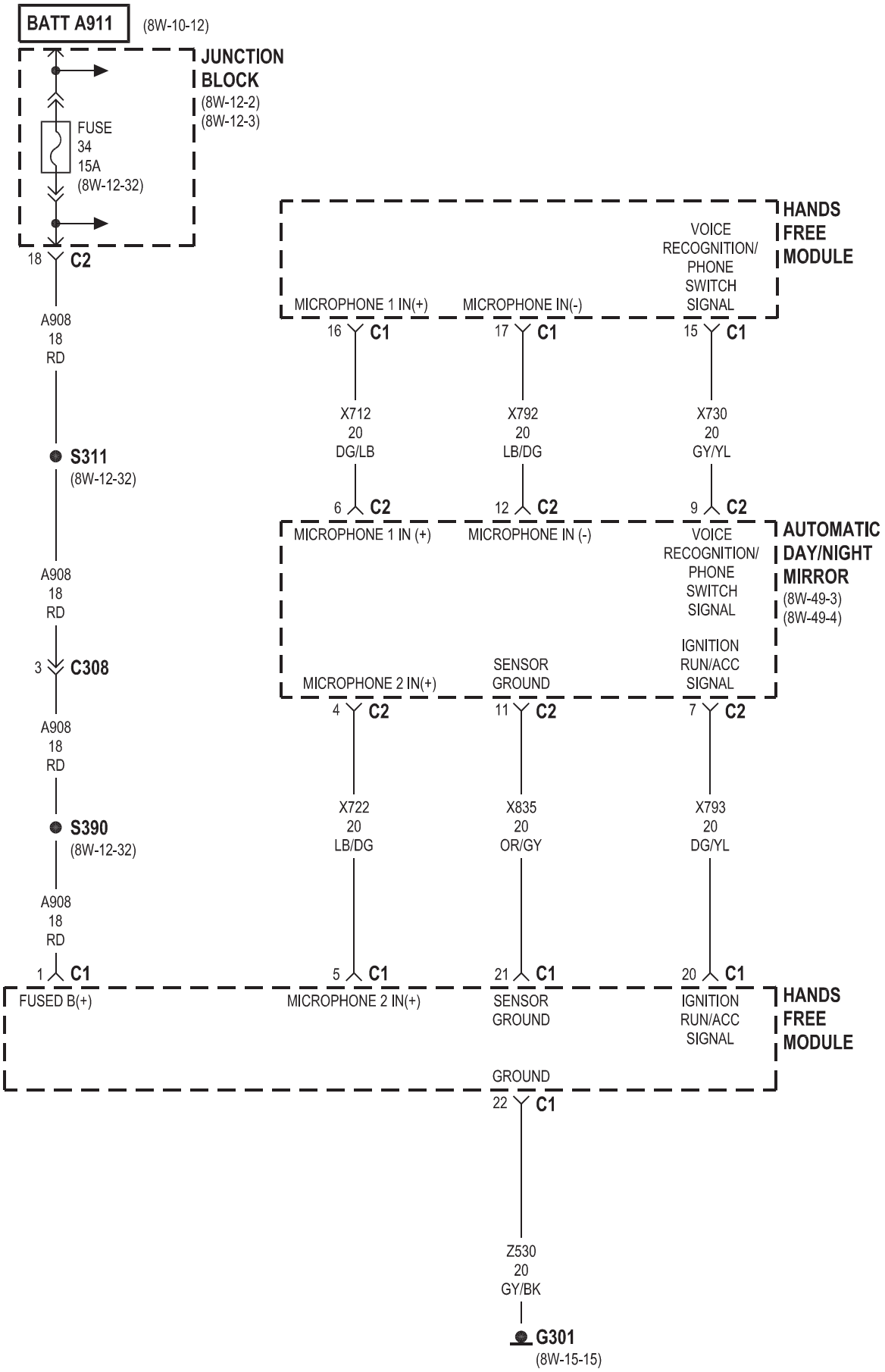
BATT A911
(8W-10-12)
JUNCTION BLOCK
(8W-12-2)
(8W-12-3)
FUSE
34
15A
(8W-12-32)
18 C2
A908
18
RD
S311
(8W-12-32)
A908
18
RD
3 C308
A908
18
RD
S390
(8W-12-32)
A908
18
RD
1 C1
FUSED B(+)
HANDS FREE MODULE
MICROPHONE 1 IN(+)
MICROPHONE IN(-)
VOICE RECOGNITION/ PHONE SWITCH SIGNAL
16 C1
17 C1
15 C1
X712
20
DG/LB
X792
20
LB/DG
X730
20
GY/YL
6 C2
12 C2
9 C2
AUTOMATIC DAY/NIGHT MIRROR
(8W-49-3)
(8W-49-4)
MICROPHONE 1 IN (+)
MICROPHONE IN (-)
VOICE RECOGNITION/ PHONE SWITCH SIGNAL
MICROPHONE 2 IN(+)
SENSOR GROUND
IGNITION RUN/ACC SIGNAL
4 C2
11 C2
7 C2
X722
20
LB/DG
X835
20
OR/GY
X793
20
DG/YL
5 C1
21 C1
20 C1
MICROPHONE 2 IN(+)
SENSOR GROUND
IGNITION RUN/ACC SIGNAL
HANDS FREE MODULE
GROUND
22 C1
Z530
20
GY/BK
G301
(8W-15-15)

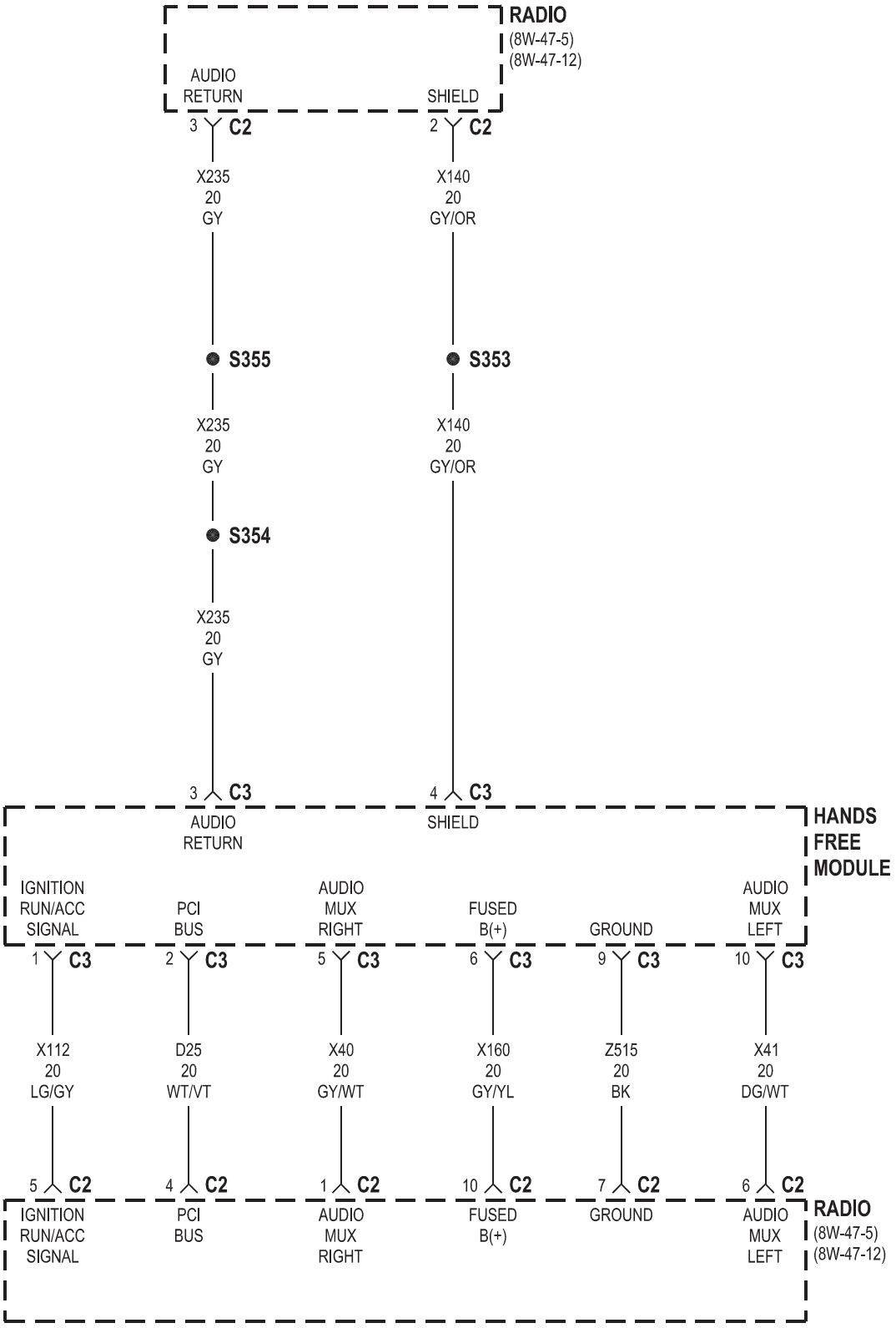
RADIO
(8W-47-5)
(8W-47-12)
AUDIO RETURN
SHIELD
3 C2
2 C2
X235 20 GY
X140 20 GY/OR
S355
S353
X235 20 GY
X140 20 GY/OR
S354
X235 20 GY
3 C3
4 C3
AUDIO RETURN
SHIELD
HANDS FREE MODULE
IGNITION RUN/ACC SIGNAL
PCI BUS
AUDIO MUX RIGHT
FUSED B(+)
GROUND
AUDIO MUX LEFT
1 C3
2 C3
5 C3
6 C3
9 C3
10 C3
X112 20 LG/GY
D25 20 WT/VT
X40 20 GY/WT
X160 20 GY/YL
Z515 20 BK
X41 20 DG/WT
5 C2
4 C2
1 C2
10 C2
7 C2
6 C2
IGNITION RUN/ACC SIGNAL
PCI BUS
AUDIO MUX RIGHT
FUSED B(+)
GROUND
AUDIO MUX LEFT
RADIO
(8W-47-5)
(8W-47-12)

8W-60 POWER WINDOWS

Component	Page
Fuse 1	8W-60-2
G301	8W-60-2
Junction Block	8W-60-2
Left Front Power Window Motor	8W-60-3
Left Rear Power Window Motor	8W-60-4
Power Sunroof Relay	8W-60-2
Power Window Master Switch	8W-60-2, 3, 4
Power Window Relay	8W-60-2
Rear Power Window Switch	8W-60-4
Right Front Power Window Motor	8W-60-3
Right Rear Power Window Motor	8W-60-4

MIDLINE/HIGHLINE

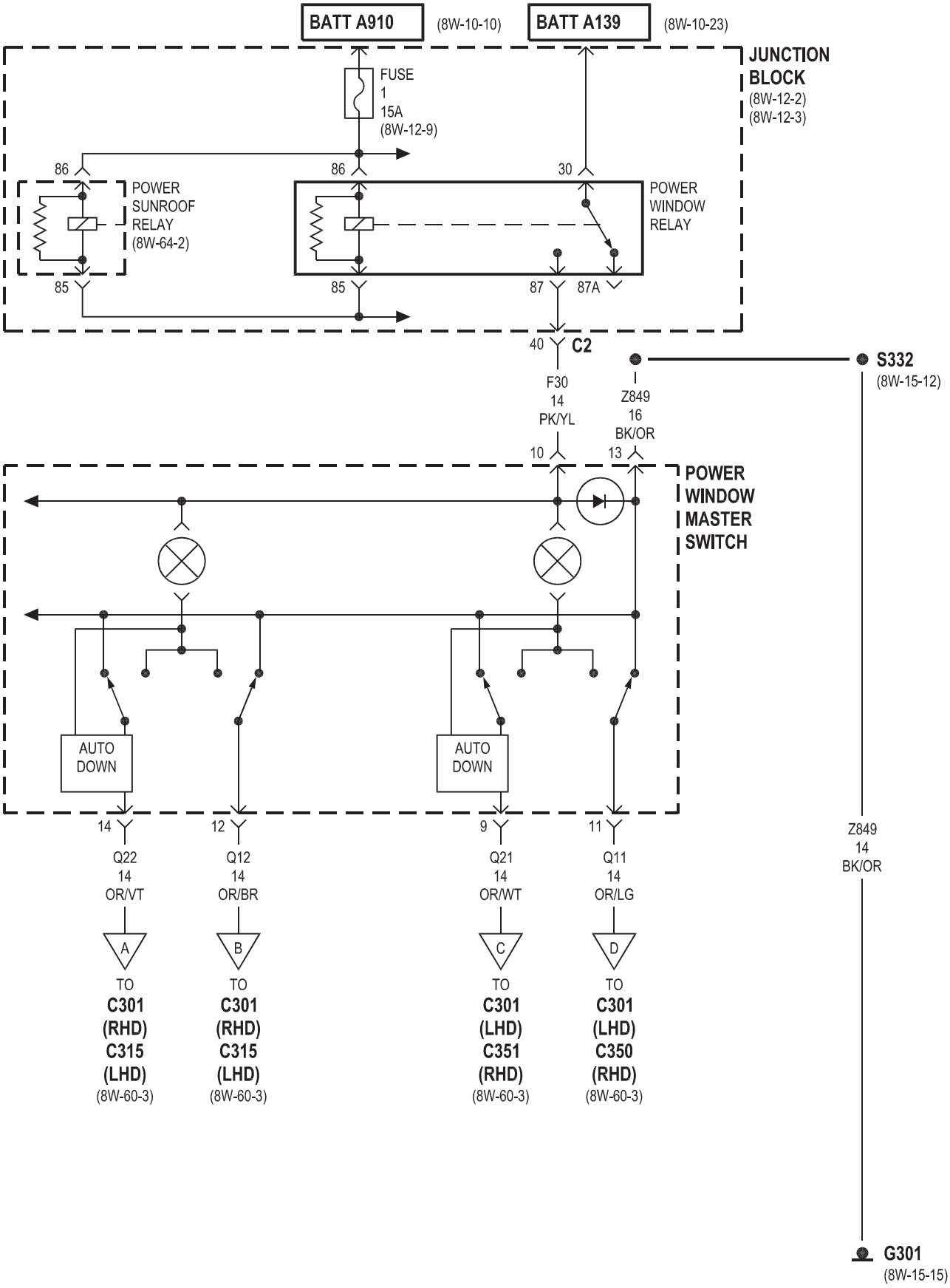

MIDLINE/HIGHLINE

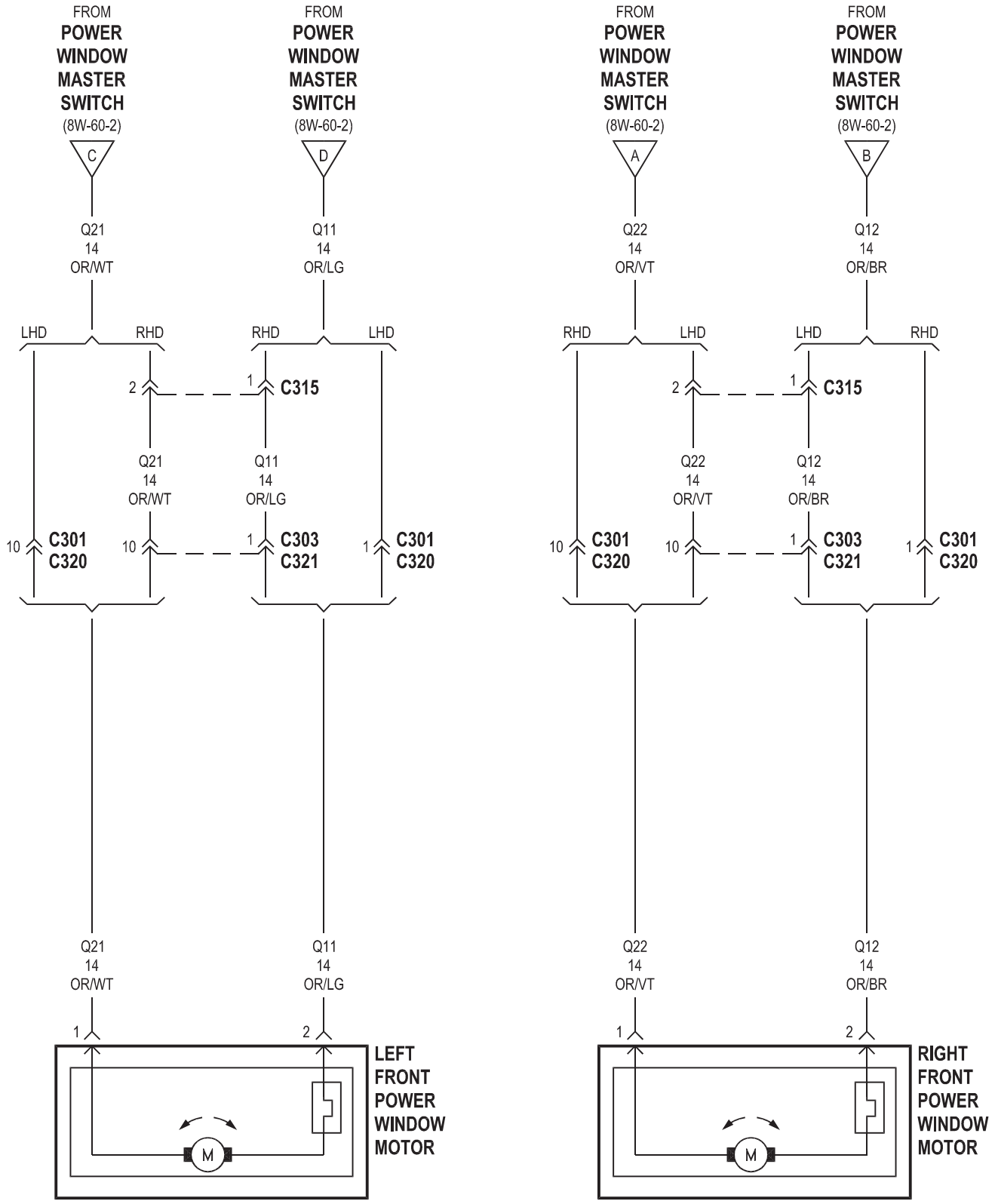

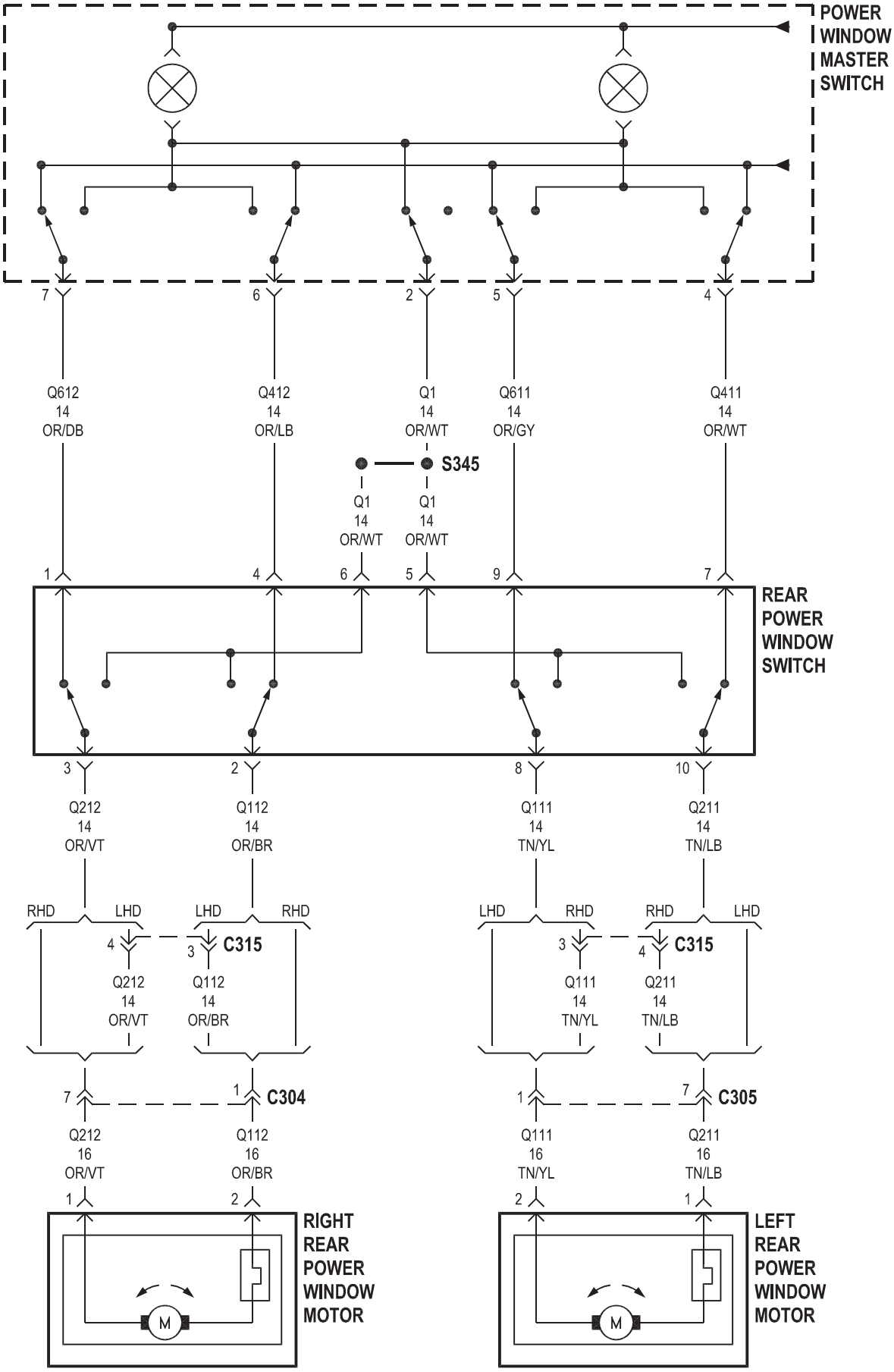
POWER WINDOW MASTER SWITCH
7
6
2
5
4
Q612 14 OR/DB
Q412 14 OR/LB
Q1 14 OR/WT
Q611 14 OR/GY
Q411 14 OR/WT
S345
Q1 14 OR/WT
Q1 14 OR/WT
1
4
6
5
9
7
REAR POWER WINDOW SWITCH
3
2
8
10
Q212 14 OR/VT
Q112 14 OR/BR
Q111 14 TN/YL
Q211 14 TN/LB
RHD
LHD
LHD
RHD
LHD
RHD
RHD
LHD
4
3
C315
3
4
C315
Q212 14 OR/VT
Q112 14 OR/BR
Q111 14 TN/YL
Q211 14 TN/LB
7
1
C304
1
7
C305
Q212 16 OR/VT
Q112 16 OR/BR
Q111 16 TN/YL
Q211 16 TN/LB
1
2
2
1
M
RIGHT REAR POWER WINDOW MOTOR
M
LEFT REAR POWER WINDOW MOTOR

8W-61 POWER DOOR LOCKS

Component	Page
Body Control Module	8W-61-2, 3, 4, 5, 6, 7, 8
Door Lock Relay	8W-61-3, 6
Driver Door Lock Motor/Ajar Switch	8W-61-2, 5
Driver Door Unlock Relay	8W-61-2, 5
Flip-Up Glass Release Motor	8W-61-8
Flip-Up Glass Release Switch	8W-61-8
Fuse 22	8W-61-2, 4, 5, 7
G300	8W-61-2, 4, 6, 7
G302	8W-61-3, 4, 5, 6
G303	8W-61-8
Junction Block	8W-61-2, 3, 4, 5, 6, 7, 8
Left Door Lock Switch	8W-61-2, 7
Left Rear Door Lock Motor/Ajar Switch	8W-61-4, 7
Passenger Door Lock Motor/Ajar Switch	8W-61-3, 4, 6
Passenger Door Unlock Relay	8W-61-3, 6
Right Door Lock Switch	8W-61-4, 5
Right Rear Door Lock Motor/Ajar Switch	8W-61-3, 6
Tailgate Cylinder Lock Switch	8W-61-8
Tailgate Flip-Up Ajar Switch	8W-61-8
Tailgate Lock Motor/Ajar Switch	8W-61-8

LHD EXCEPT BASE

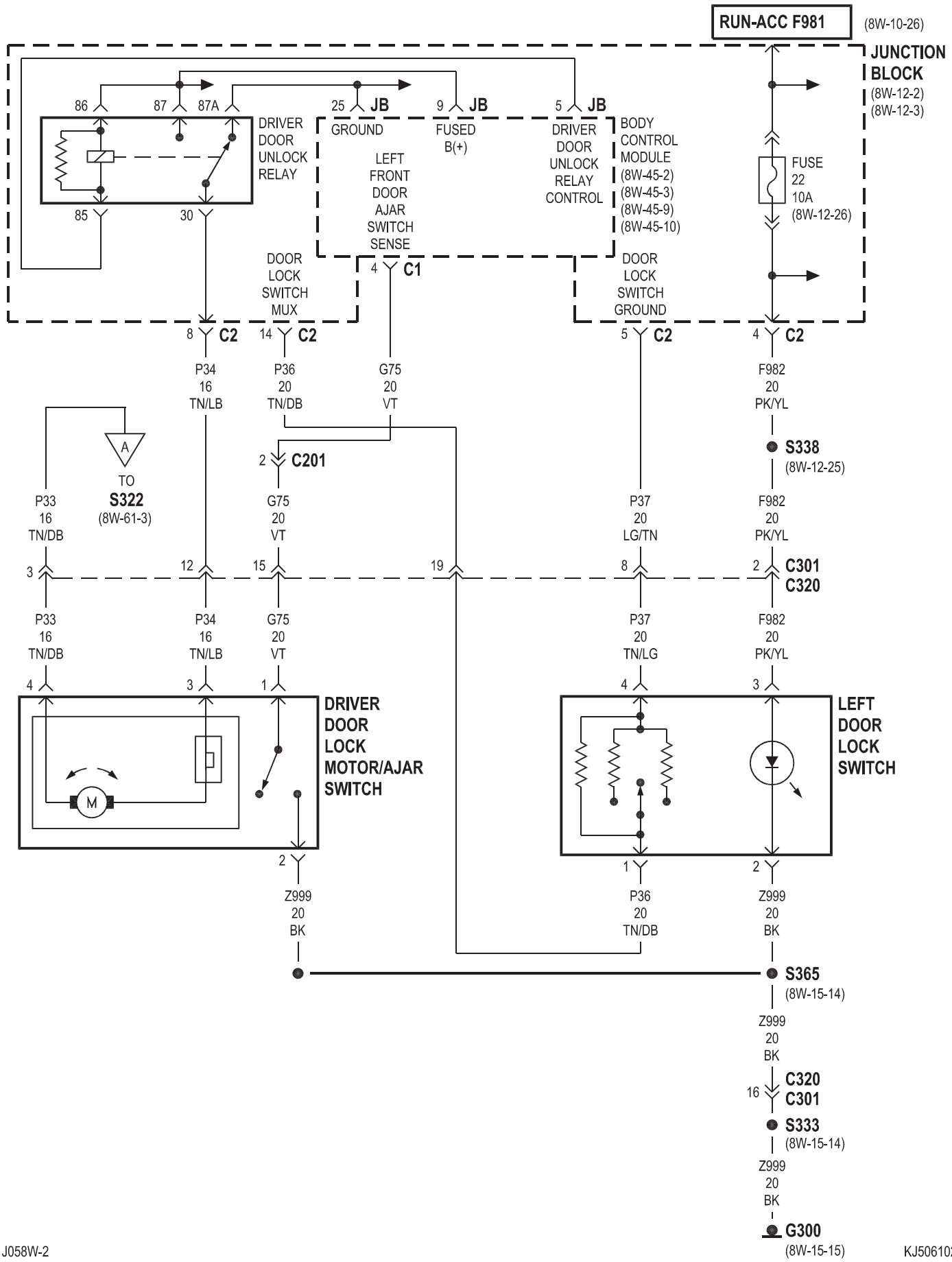

LHD EXCEPT BASE

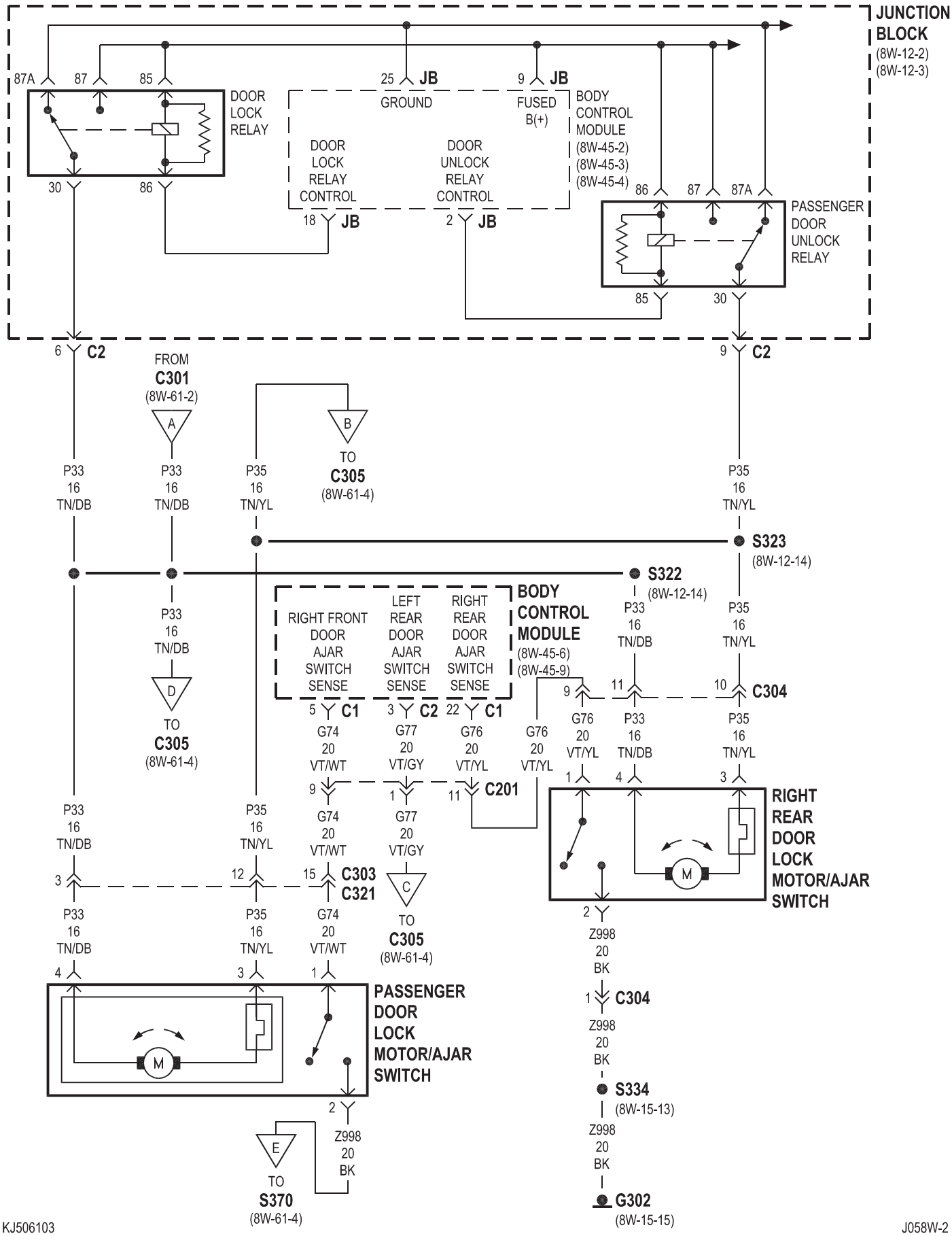

LHD EXCEPT BASE

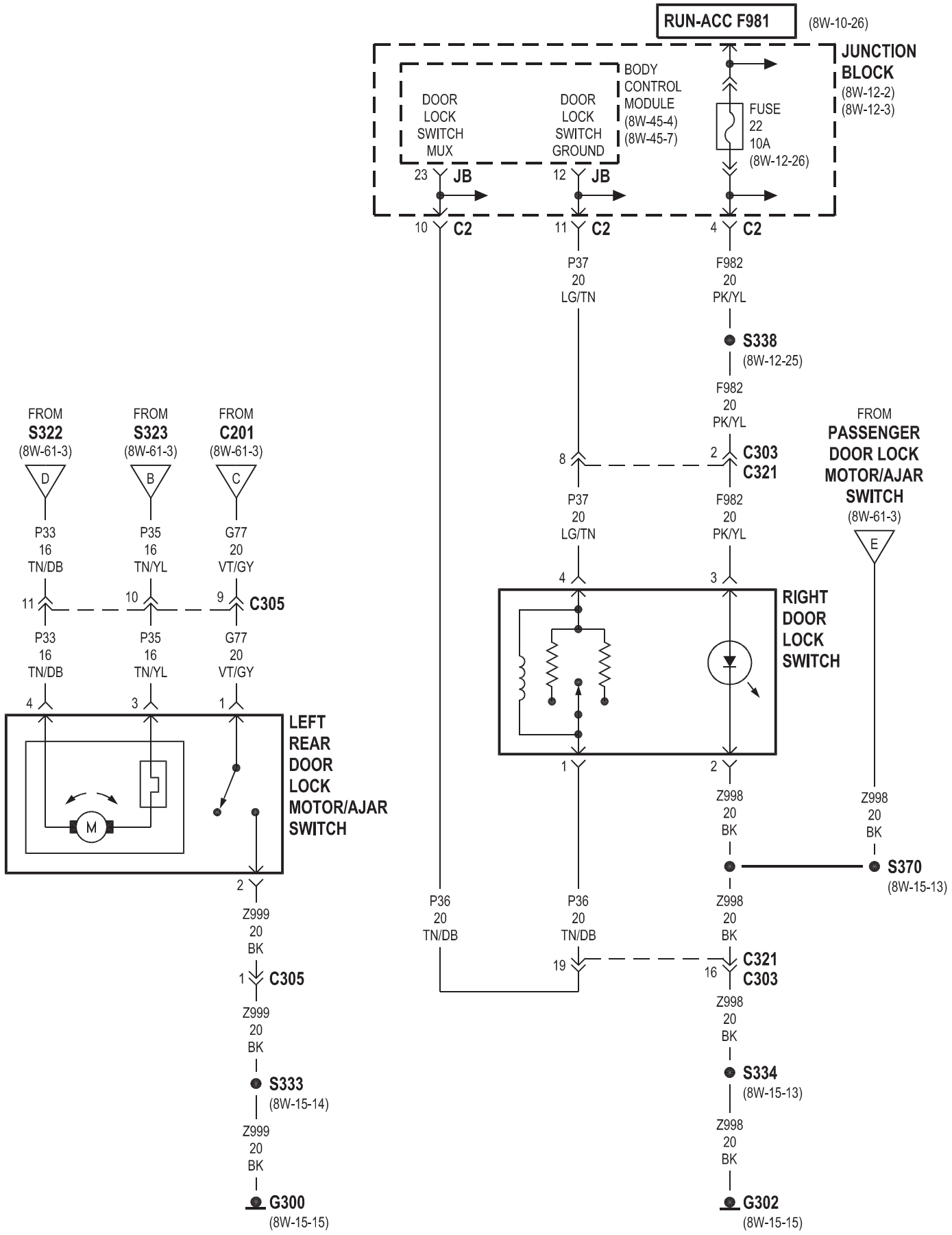

RHD EXCEPT BASE

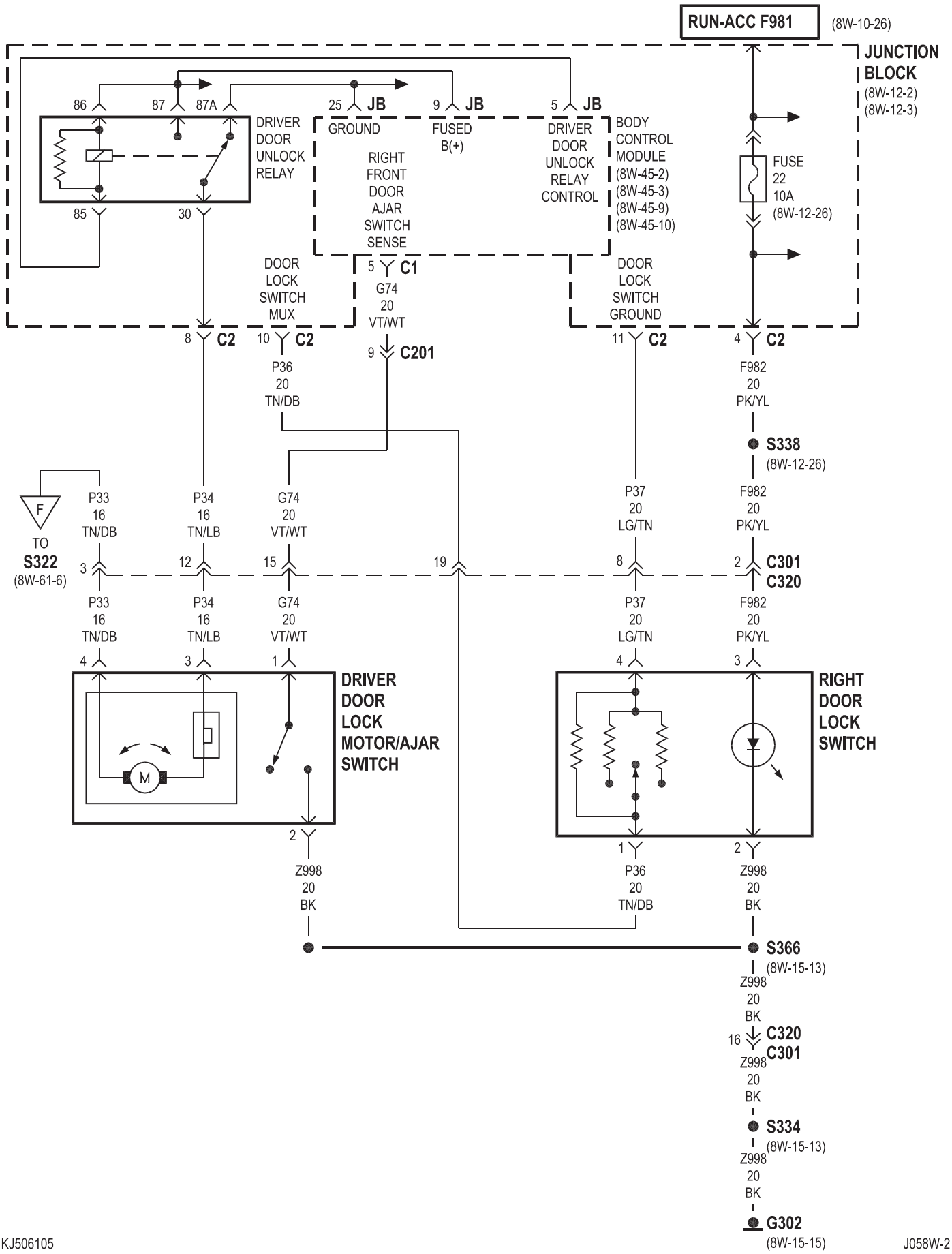

RHD EXCEPT BASE

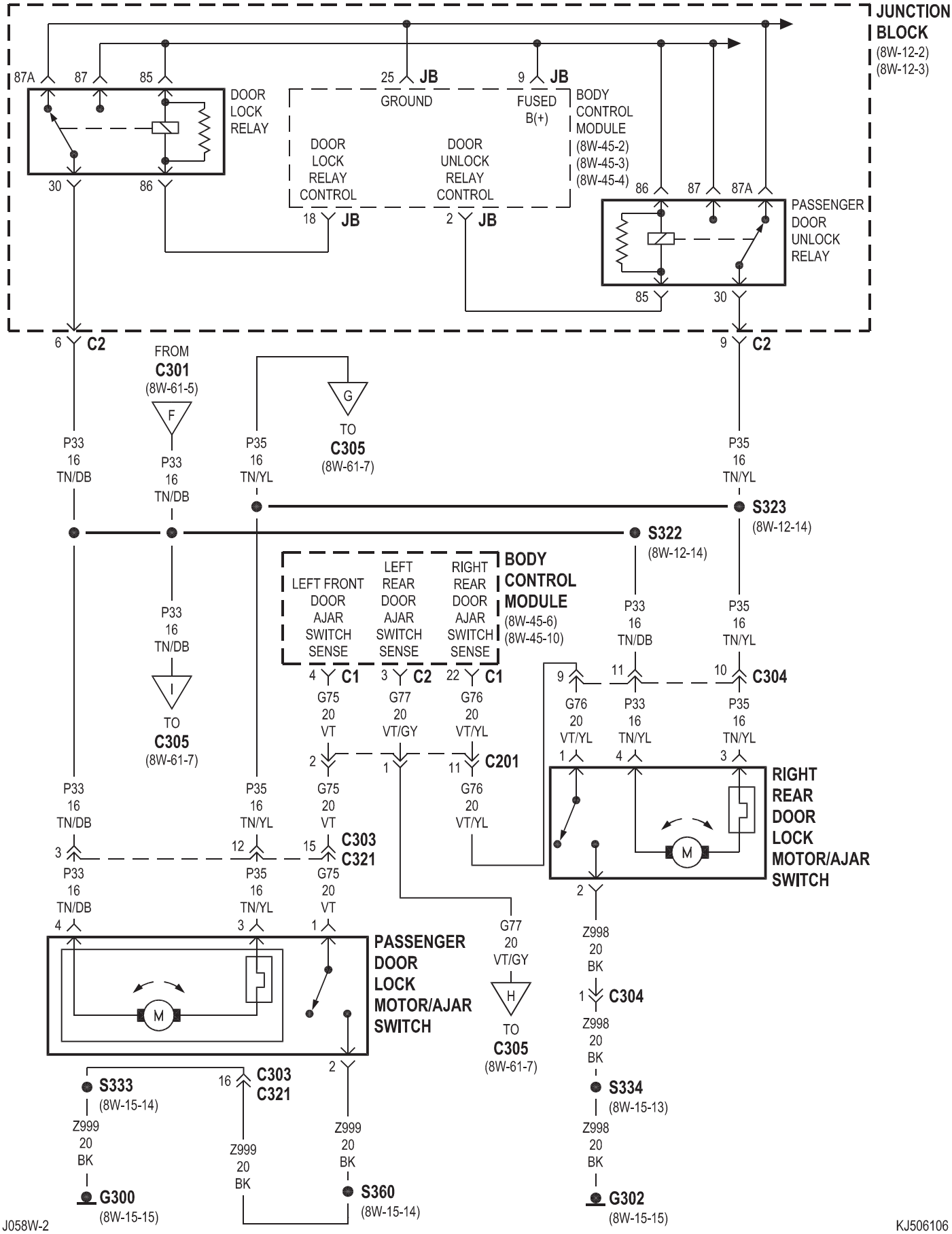

RHD EXCEPT BASE

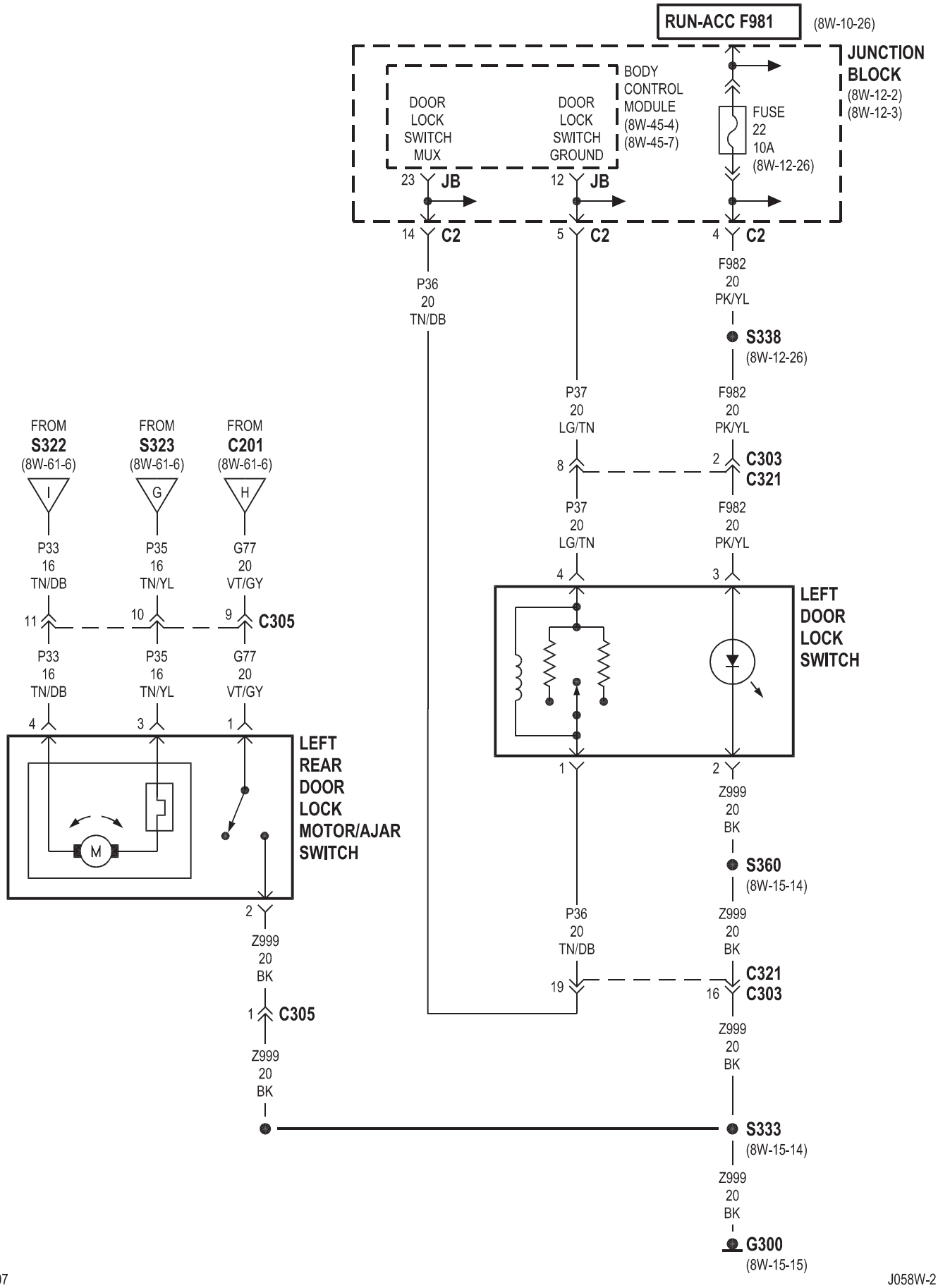

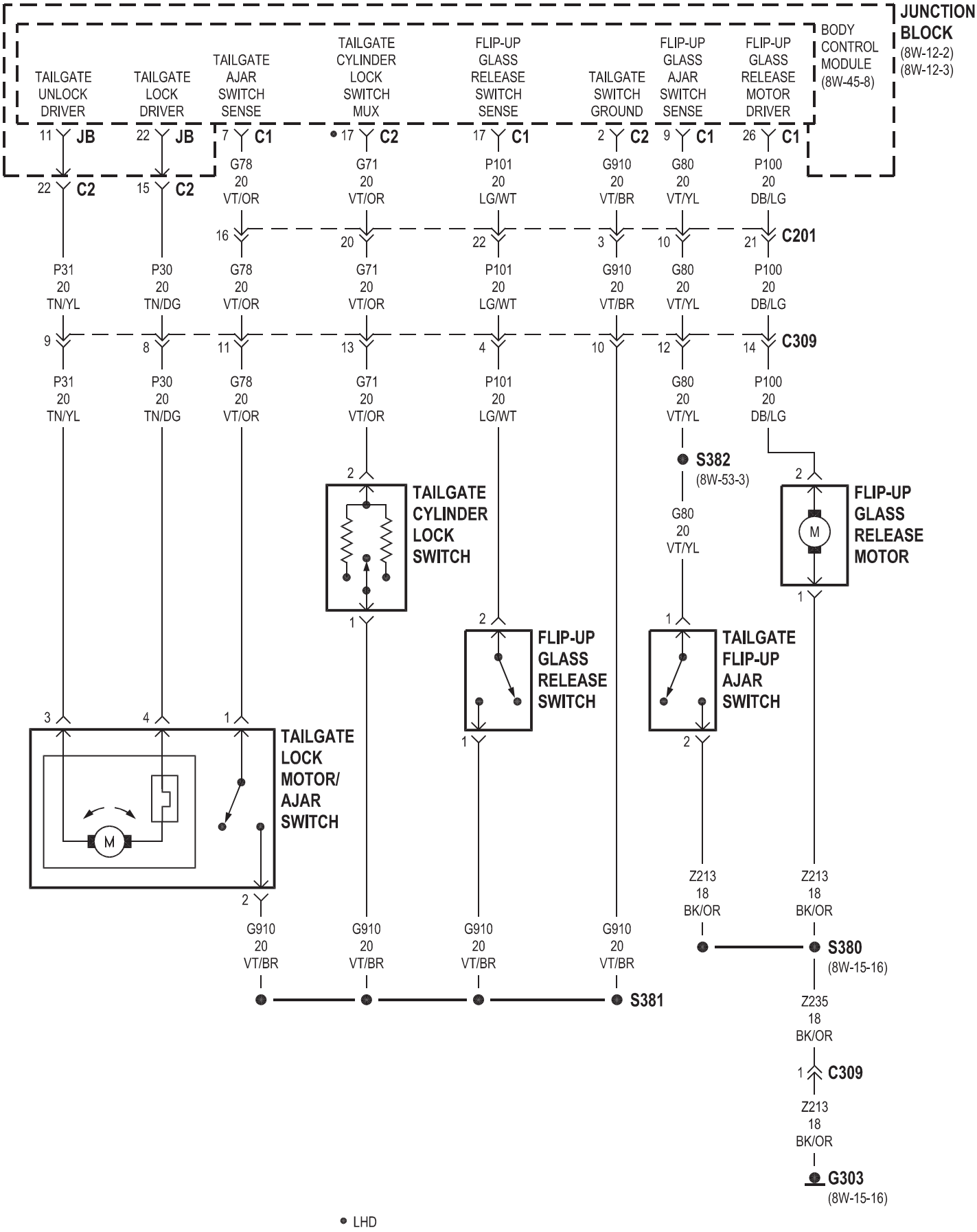
JUNCTION BLOCK
(8W-12-2)
(8W-12-3)
BODY CONTROL MODULE
(8W-45-8)
TAILGATE UNLOCK DRIVER
TAILGATE LOCK DRIVER
TAILGATE AJAR SWITCH SENSE
TAILGATE CYLINDER LOCK SWITCH MUX
FLIP-UP GLASS RELEASE SWITCH SENSE
TAILGATE SWITCH GROUND
FLIP-UP GLASS AJAR SWITCH SENSE
FLIP-UP GLASS RELEASE MOTOR DRIVER
11 JB
22 JB
7 C1
17 C2
17 C1
2 C2
9 C1
26 C1
22 C2
15 C2
G78 20 VT/OR
G71 20 VT/OR
P101 20 LG/WT
G910 20 VT/BR
G80 20 VT/YL
P100 20 DB/LG
16
20
22
3
10
21
C201
P31 20 TN/YL
P30 20 TN/DG
G78 20 VT/OR
G71 20 VT/OR
P101 20 LG/WT
G910 20 VT/BR
G80 20 VT/YL
P100 20 DB/LG
9
8
11
13
4
10
12
14
C309
P31 20 TN/YL
P30 20 TN/DG
G78 20 VT/OR
G71 20 VT/OR
P101 20 LG/WT
G80 20 VT/YL
P100 20 DB/LG
S382
(8W-53-3)
G80 20 VT/YL
TAILGATE CYLINDER LOCK SWITCH
FLIP-UP GLASS RELEASE MOTOR
FLIP-UP GLASS RELEASE SWITCH
TAILGATE FLIP-UP AJAR SWITCH
TAILGATE LOCK MOTOR/ AJAR SWITCH
M
Z213 18 BK/OR
Z213 18 BK/OR
G910 20 VT/BR
G910 20 VT/BR
G910 20 VT/BR
G910 20 VT/BR
S380
(8W-15-16)
S381
Z235 18 BK/OR
C309
Z213 18 BK/OR
G303
(8W-15-16)
LHD

8W-62 POWER MIRRORS

Component	Page
Automatic Day/Night Mirror	8W-62-4
Defogger Relay	8W-62-2, 5
Driver Power Mirror	8W-62-2, 3, 4, 5, 6
Fuse 19	8W-62-2, 5
Fuse 25	8W-62-2, 5
Fuse 30	8W-62-2, 5
G300	8W-62-3, 6
G302	8W-62-3, 6
Junction Block	8W-62-2, 3, 5, 6
Passenger Power Mirror	8W-62-2, 3, 5, 6
Power Distribution Center	8W-62-2, 5
Power Mirror Switch	8W-62-2, 3, 5, 6

LHD EXCEPT BASE

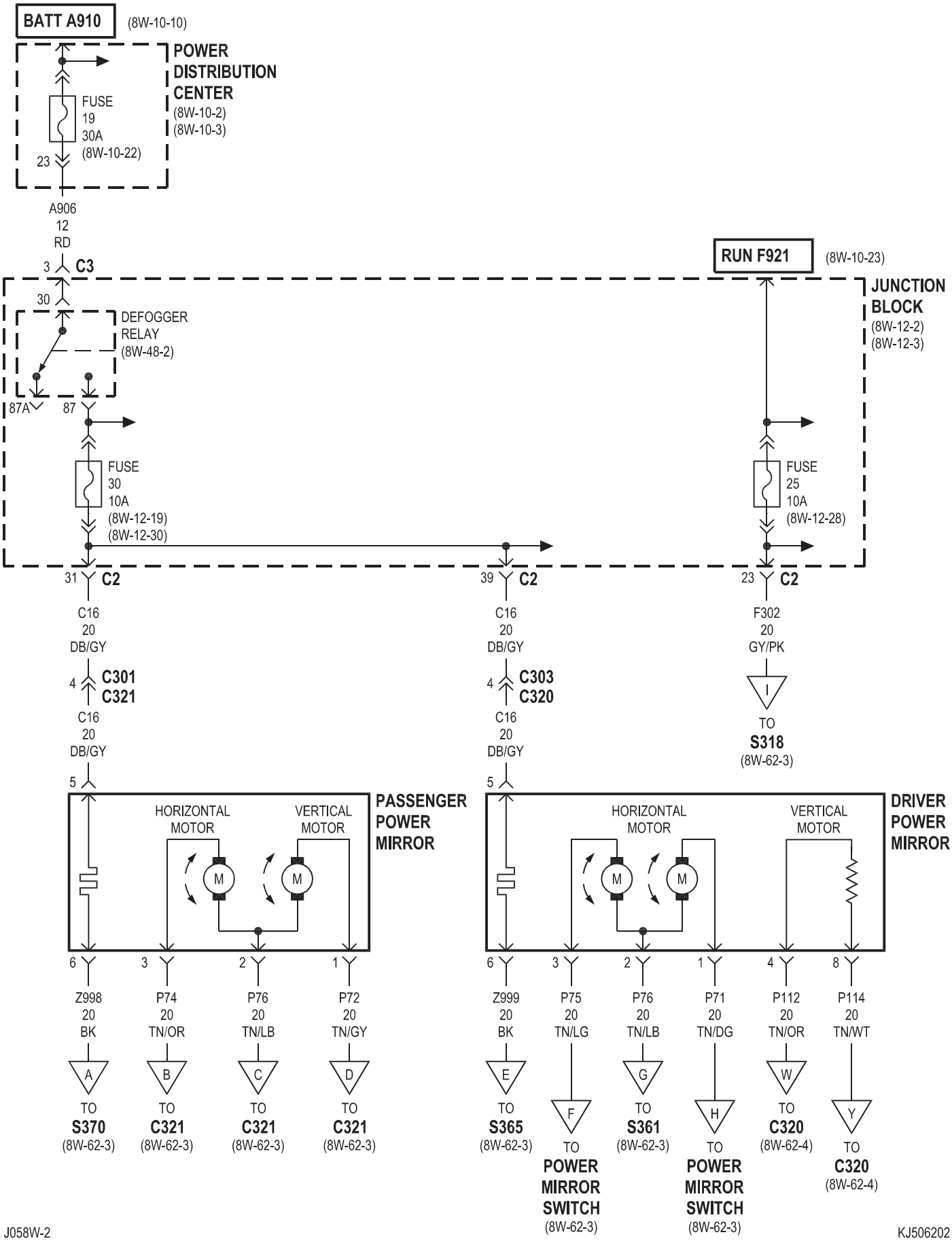

LHD EXCEPT BASE

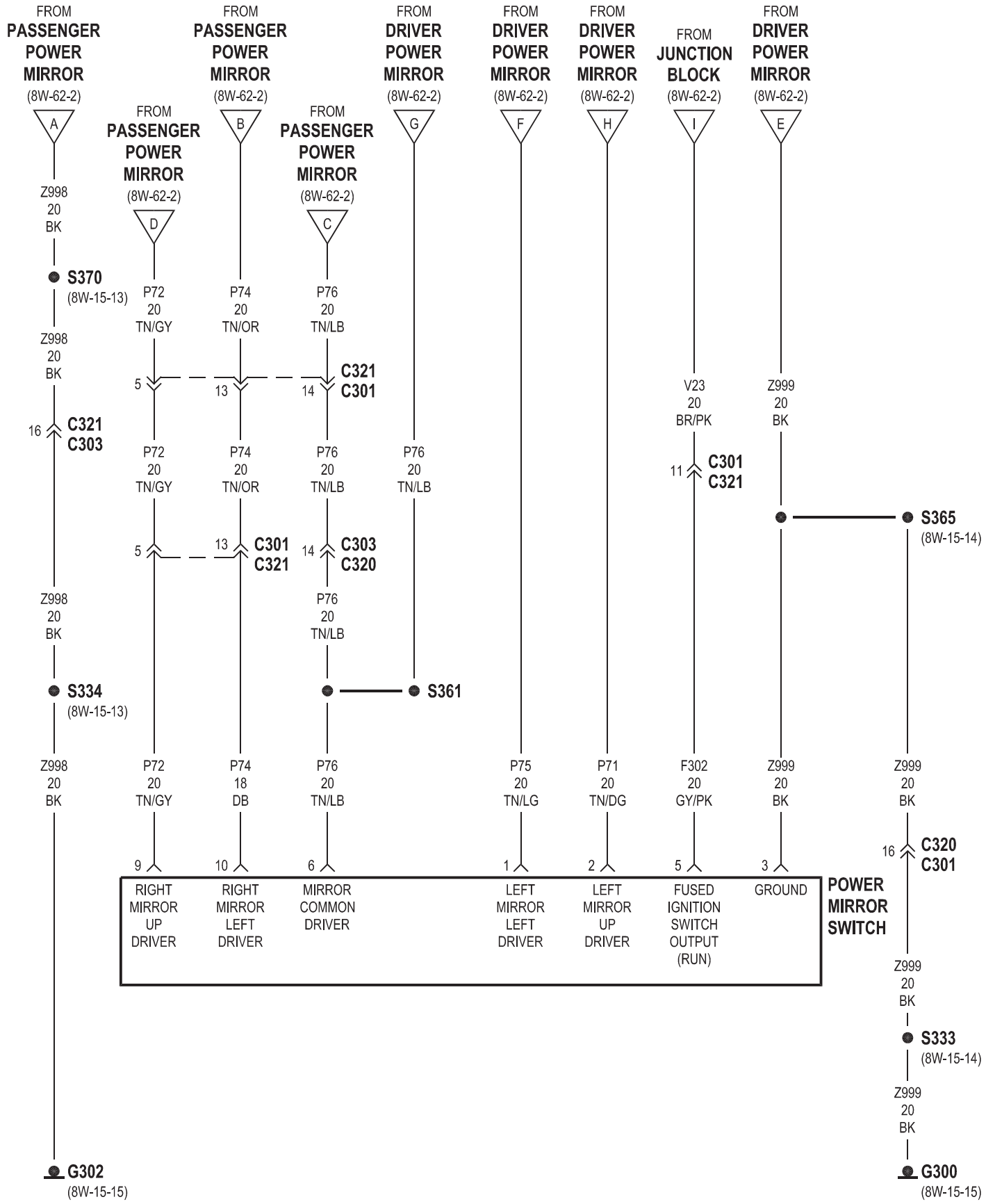

LHD EXCEPT BASE

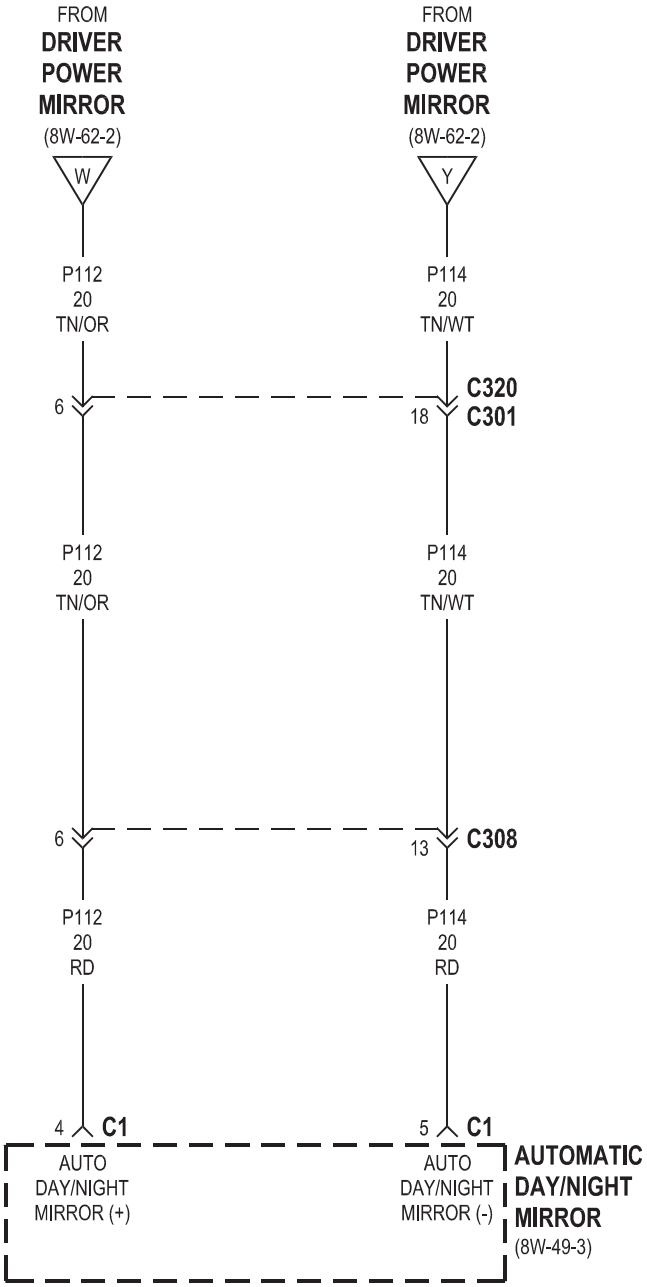

RHD EXCEPT BASE

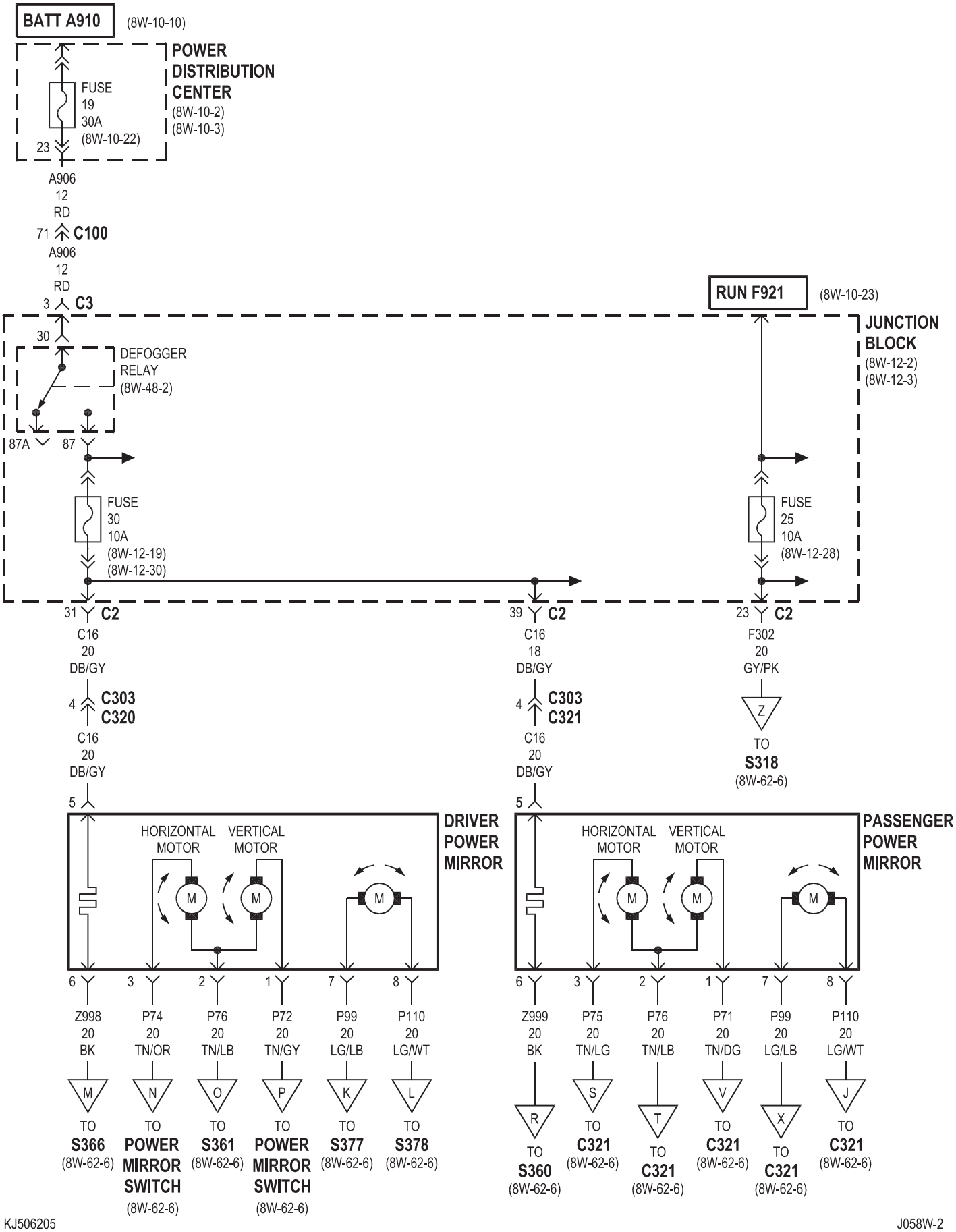

RHD EXCEPT BASE

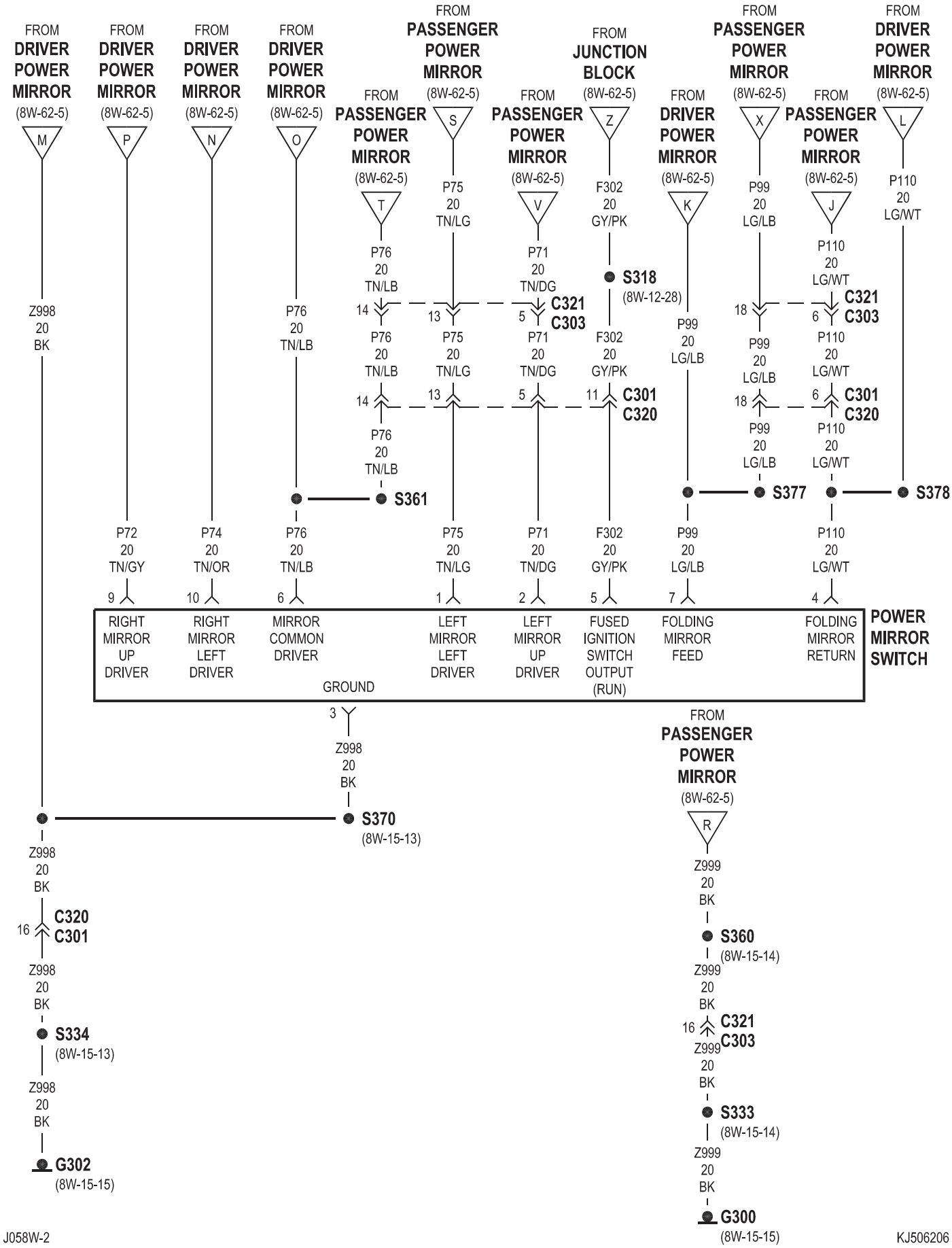

8W-63 POWER SEAT

Component	Page
Circuit Breaker No. 3	8W-63-2, 3
Fuse 25	8W-63-4
Fuse 30	8W-63-5
G301	8W-63-2, 3, 4, 5
Heated Seat Module	8W-63-4, 5
Junction Block	8W-63-2, 3, 4, 5
Left Heated Seat Assembly	8W-63-4, 5
Left Heated Seat Switch	8W-63-5
Left Power Seat Motors	8W-63-2
Left Power Seat Switch	8W-63-2
Right Heated Seat Assembly	8W-63-4
Right Heated Seat Switch	8W-63-4
Right Power Seat Motor	8W-63-3
Right Power Seat Switch	8W-63-3

MIDLINE/HIGHLINE

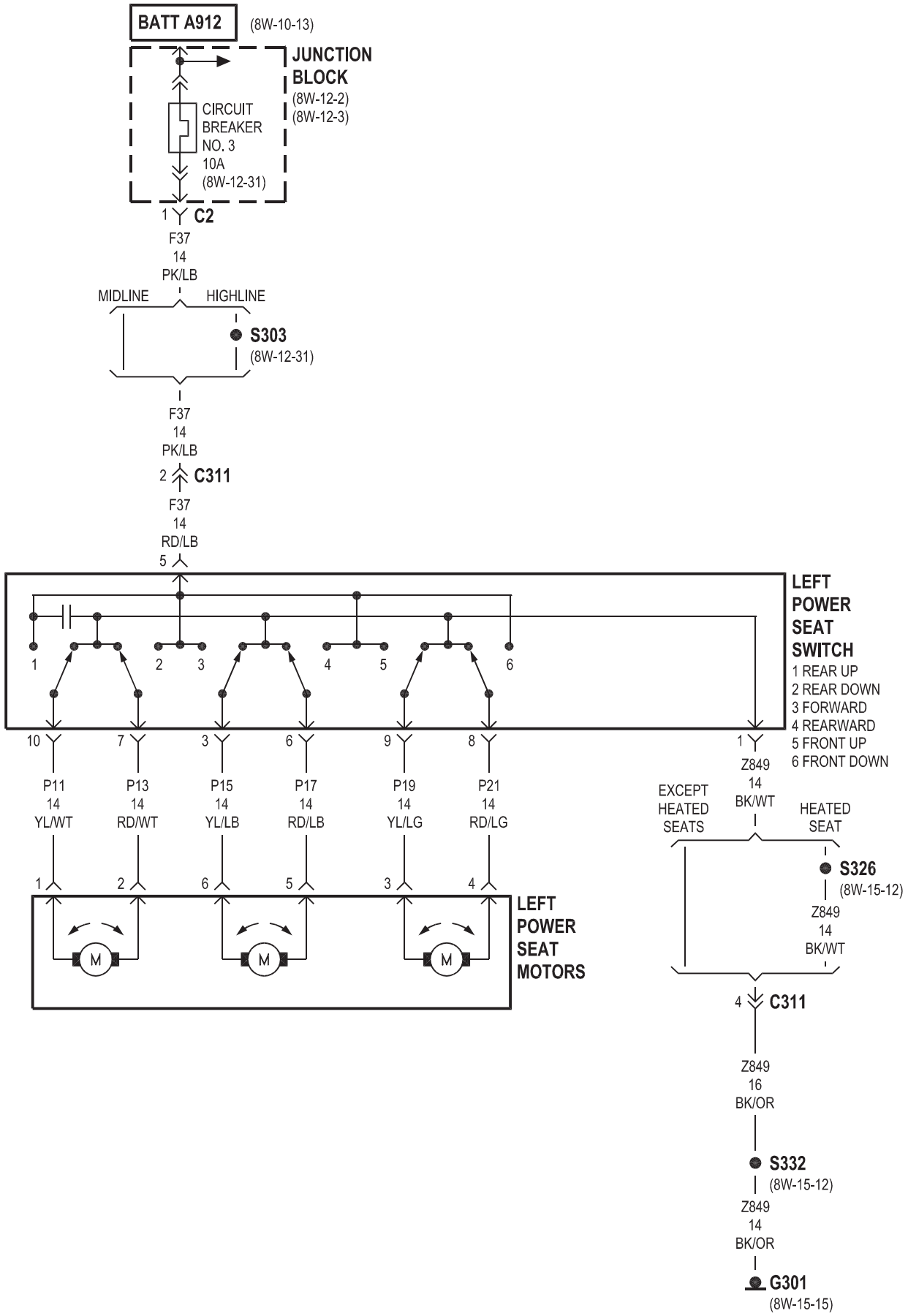

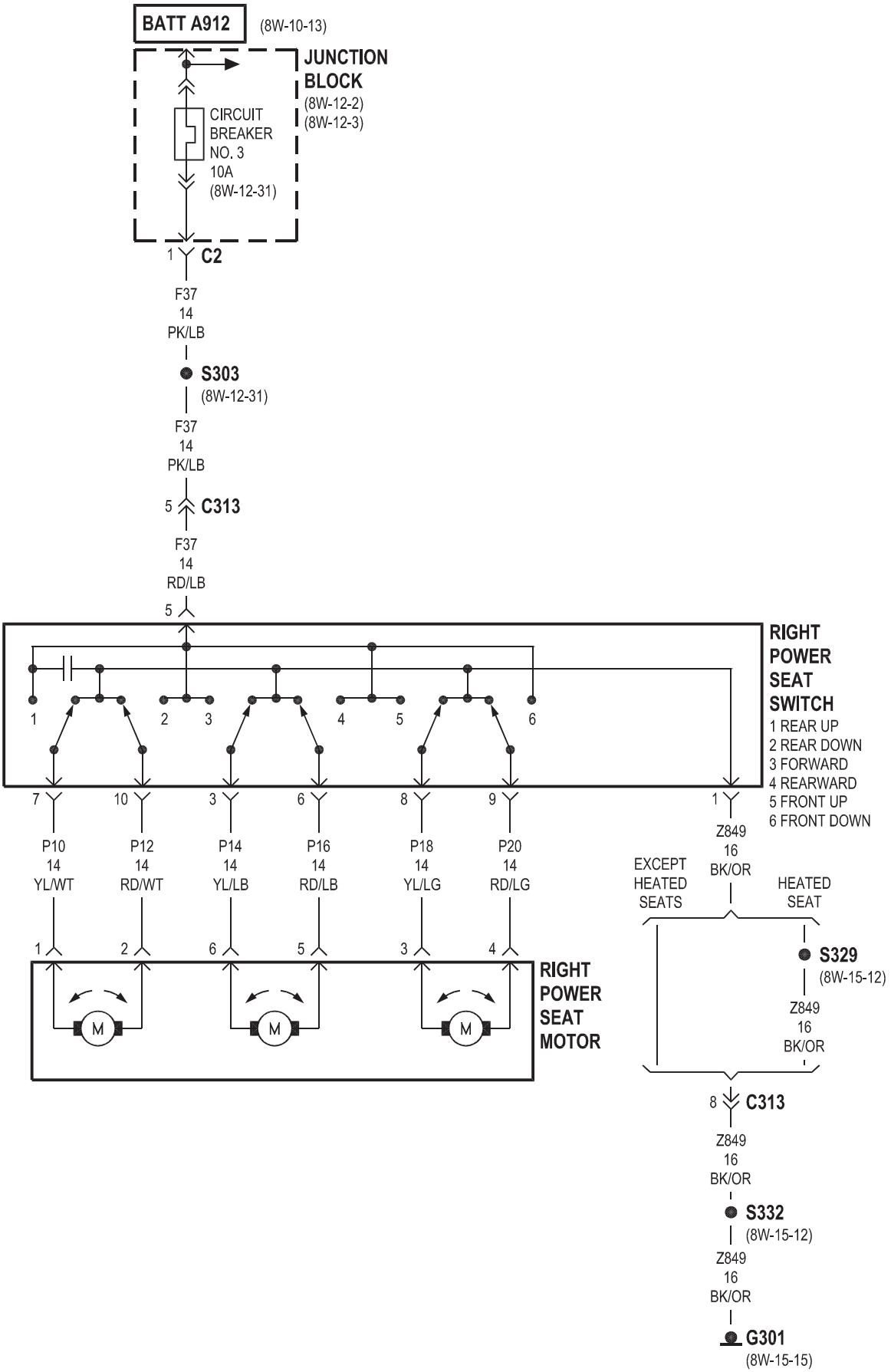
BATT A912
(8W-10-13)
JUNCTION BLOCK
(8W-12-2)
(8W-12-3)
CIRCUIT BREAKER NO. 3 10A
(8W-12-31)
1 C2
F37 14 PK/LB
S303
(8W-12-31)
F37 14 PK/LB
5 C313
F37 14 RD/LB
5
RIGHT POWER SEAT SWITCH
1 REAR UP
2 REAR DOWN
3 FORWARD
4 REARWARD
5 FRONT UP
6 FRONT DOWN
1 2 3 4 5 6
7 10 3 6 8 9 1
P10 14 YL/WT
P12 14 RD/WT
P14 14 YL/LB
P16 14 RD/LB
P18 14 YL/LG
P20 14 RD/LG
Z849 16 BK/OR
EXCEPT HEATED SEATS
HEATED SEAT
S329
(8W-15-12)
Z849 16 BK/OR
1 2 6 5 3 4
M
RIGHT POWER SEAT MOTOR
8 C313
Z849 16 BK/OR
S332
(8W-15-12)
Z849 16 BK/OR
G301
(8W-15-15)

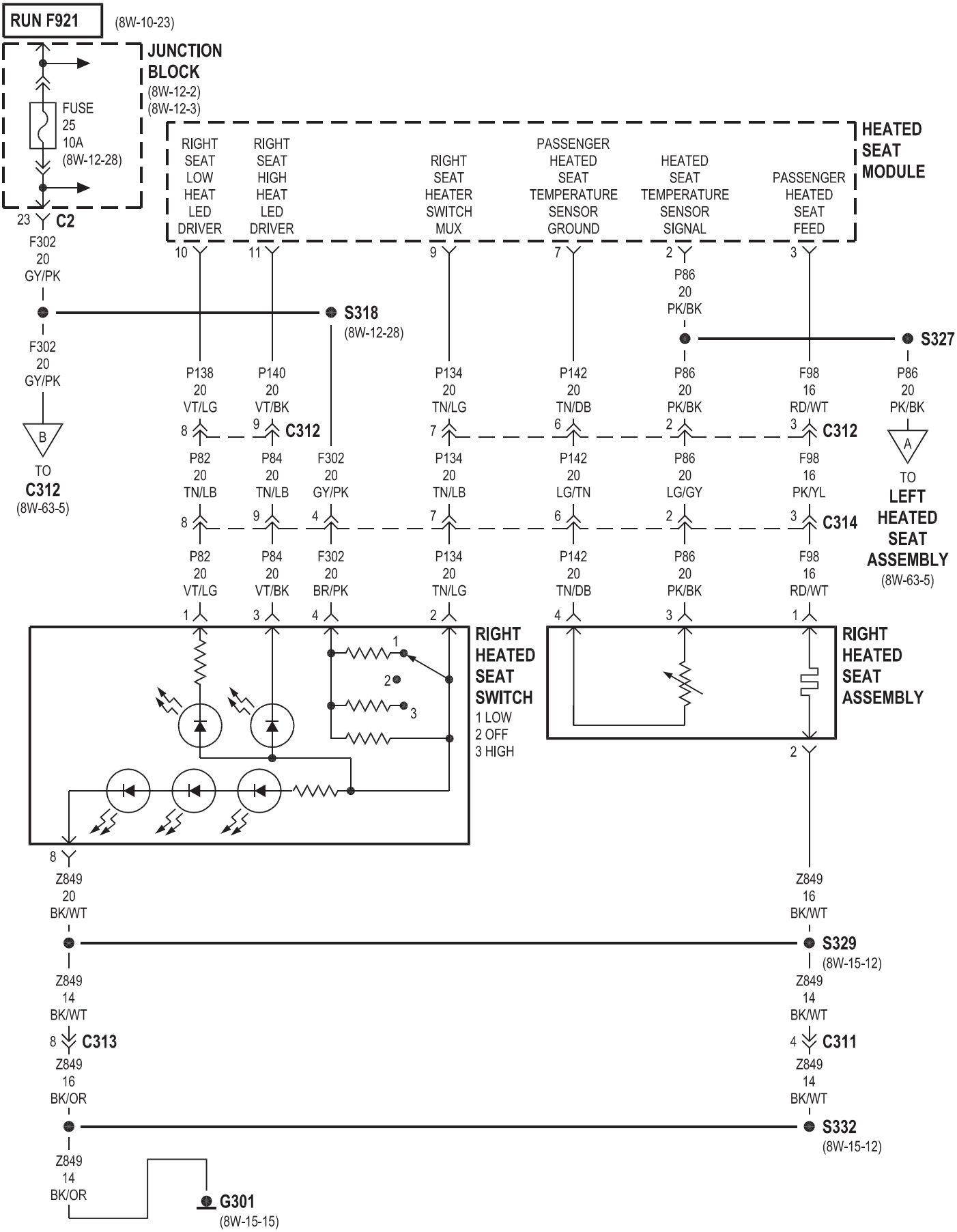
RUN F921
(8W-10-23)
JUNCTION BLOCK
(8W-12-2)
(8W-12-3)
FUSE 25 10A
(8W-12-28)
23 C2
F302 20 GY/PK
F302 20 GY/PK
B
TO C312
(8W-63-5)
HEATED SEAT MODULE
RIGHT SEAT LOW HEAT LED DRIVER
RIGHT SEAT HIGH HEAT LED DRIVER
RIGHT SEAT HEATER SWITCH MUX
PASSENGER HEATED SEAT TEMPERATURE SENSOR GROUND
HEATED SEAT TEMPERATURE SENSOR SIGNAL
PASSENGER HEATED SEAT FEED
10
11
9
7
2
3
S318
(8W-12-28)
P86 20 PK/BK
S327
P138 20 VT/LG
P140 20 VT/BK
P134 20 TN/LG
P142 20 TN/DB
P86 20 PK/BK
F98 16 RD/WT
P86 20 PK/BK
8
9
C312
7
6
2
3
C312
A
TO LEFT HEATED SEAT ASSEMBLY
(8W-63-5)
P82 20 TN/LB
P84 20 TN/LB
F302 20 GY/PK
P134 20 TN/LB
P142 20 LG/TN
P86 20 LG/GY
F98 16 PK/YL
8
9
4
7
6
2
3
C314
P82 20 VT/LG
P84 20 VT/BK
F302 20 BR/PK
P134 20 TN/LG
P142 20 TN/DB
P86 20 PK/BK
F98 16 RD/WT
1
3
4
2
4
3
1
RIGHT HEATED SEAT SWITCH
1 LOW
2 OFF
3 HIGH
RIGHT HEATED SEAT ASSEMBLY
2
8
Z849 20 BK/WT
Z849 16 BK/WT
S329
(8W-15-12)
Z849 14 BK/WT
Z849 14 BK/WT
8 C313
4 C311
Z849 16 BK/OR
Z849 14 BK/WT
S332
(8W-15-12)
Z849 14 BK/OR
G301
(8W-15-15)

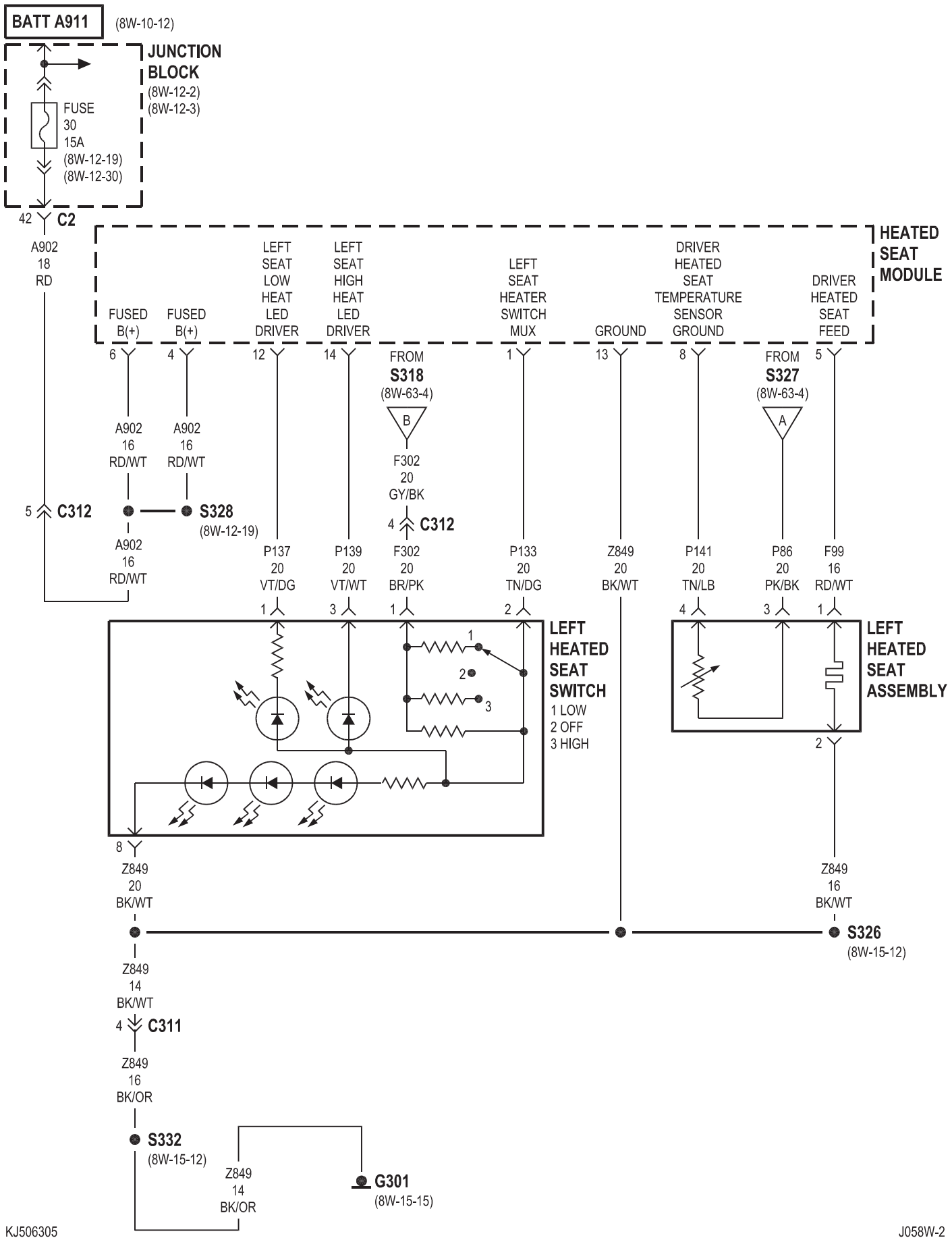
BATT A911
(8W-10-12)
JUNCTION BLOCK
(8W-12-2)
(8W-12-3)
FUSE 30 15A
(8W-12-19)
(8W-12-30)
42 C2
A902 18 RD
HEATED SEAT MODULE
FUSED B(+)
FUSED B(+)
LEFT SEAT LOW HEAT LED DRIVER
LEFT SEAT HIGH HEAT LED DRIVER
LEFT SEAT HEATER SWITCH MUX
GROUND
DRIVER HEATED SEAT TEMPERATURE SENSOR GROUND
DRIVER HEATED SEAT FEED
6
4
12
14
1
13
8
5
FROM S318 (8W-63-4)
FROM S327 (8W-63-4)
B
A
A902 16 RD/WT
A902 16 RD/WT
F302 20 GY/BK
5 C312
S328
(8W-12-19)
4 C312
A902 16 RD/WT
P137 20 VT/DG
P139 20 VT/WT
F302 20 BR/PK
P133 20 TN/DG
Z849 20 BK/WT
P141 20 TN/LB
P86 20 PK/BK
F99 16 RD/WT
1
3
1
2
4
3
1
LEFT HEATED SEAT SWITCH
1 LOW
2 OFF
3 HIGH
LEFT HEATED SEAT ASSEMBLY
2
8
Z849 20 BK/WT
Z849 16 BK/WT
S326
(8W-15-12)
Z849 14 BK/WT
4 C311
Z849 16 BK/OR
S332
(8W-15-12)
Z849 14 BK/OR
G301
(8W-15-15)

8W-64 POWER SUNROOF

Component	Page
Fuse 32	8W-64-2
G301	8W-64-2
G303	8W-64-2
Junction Block	8W-64-2
Power Sunroof Relay	8W-64-2
Power Window Relay	8W-64-2
Sunroof Motor	8W-64-2
Sunroof Switch	8W-64-2

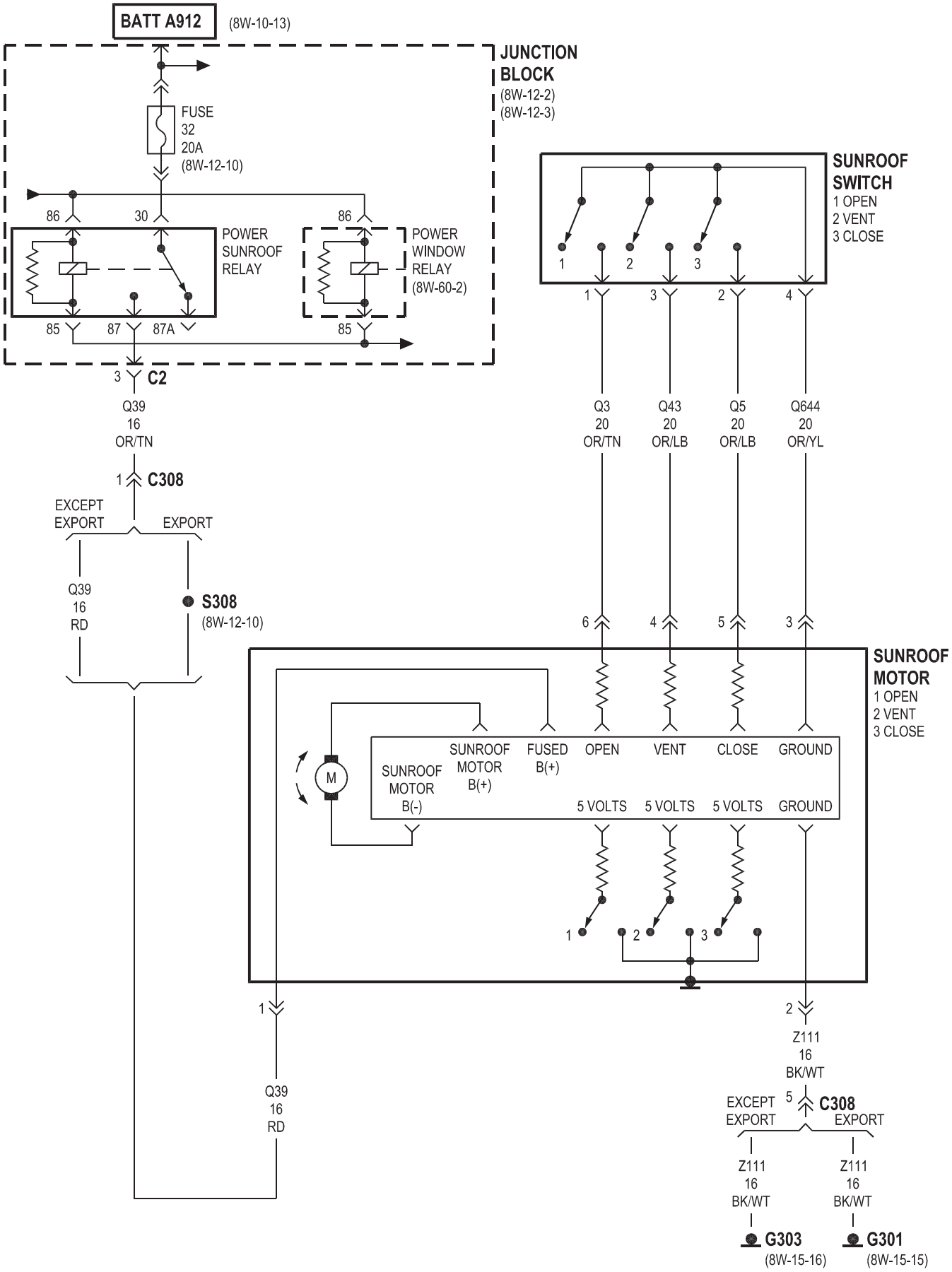
BATT A912
(8W-10-13)
JUNCTION BLOCK
(8W-12-2)
(8W-12-3)
FUSE
32
20A
(8W-12-10)
86
30
86
POWER SUNROOF RELAY
POWER WINDOW RELAY
(8W-60-2)
85
87
87A
85
3
C2
Q39
16
OR/TN
1
C308
EXCEPT EXPORT
EXPORT
Q39
16
RD
S308
(8W-12-10)
SUNROOF SWITCH
1 OPEN
2 VENT
3 CLOSE
1
2
3
1
3
2
4
Q3
20
OR/TN
Q43
20
OR/LB
Q5
20
OR/LB
Q644
20
OR/YL
6
4
5
3
SUNROOF MOTOR
1 OPEN
2 VENT
3 CLOSE
M
SUNROOF MOTOR B(-)
SUNROOF MOTOR B(+)
FUSED B(+)
OPEN
VENT
CLOSE
GROUND
5 VOLTS
5 VOLTS
5 VOLTS
GROUND
1
2
3
1
Q39
16
RD
2
Z111
16
BK/WT
5
C308
EXCEPT EXPORT
EXPORT
Z111
16
BK/WT
Z111
16
BK/WT
G303
(8W-15-16)
G301
(8W-15-15)

8W-70 SPLICE INFORMATION

Component	Page
S103	8W-35-5
S104	8W-18-3
S105	8W-18-2, 3
S106	8W-70-2, 4, 7
S109	8W-15-5
S110	8W-15-6
S111	8W-15-5
S112	8W-18-5
S114	8W-12-25, 26
S115	8W-12-25, 26
S117	8W-15-6
S118	8W-53-4
S119	8W-12-27
S121	8W-12-15, 16, 17
S122	8W-12-15, 16, 17
S123	8W-21-2
S124	8W-10-24
S125	8W-10-22
S127	8W-10-15
S128	8W-10-12
S129	8W-10-12
S130	8W-15-5
S131	8W-15-6
S133	8W-30-27
S134	8W-30-27
S135	8W-45-3, 5
S136	8W-18-5
S137	8W-18-5
S141	8W-12-15
S142	8W-52-6
S144	8W-12-23, 24
S145	8W-52-4
S146	8W-12-15
S149	8W-50-5
S150	8W-10-20
S151	8W-10-17
S152	8W-70-9
S153	8W-70-3, 5, 7
S154	8W-70-3, 4, 7
S155	8W-30-16
S156	8W-30-28
S157	8W-70-6
S158	8W-30-20, 25
S160	8W-12-21, 22
S161	8W-31-9
S162	8W-70-6
S163	8W-70-8
S164	8W-10-14, 18
S166	8W-30-15
S167	8W-15-4
S168	8W-15-7
S169	8W-15-8
S172	8W-10-14
S177	8W-15-2, 3
S178	8W-10-16
S185	8W-31-13, 15
S194	8W-50-3, 12
S200	8W-15-11
S201	8W-18-4
S202	8W-12-27
S204	8W-12-30
S205	8W-70-2, 4, 7
S206	8W-53-2
S207	8W-12-18
S208	8W-12-21, 22
S209	8W-42-4
S211	8W-15-19
S212	8W-52-4, 5
S213	8W-52-6, 7
S214	8W-15-11
S215	8W-31-7, 11
S216	8W-12-16, 17
S217	8W-53-3
S218	8W-53-3
S219	8W-10-24
S220	8W-10-22
S225	8W-50-3, 12
S226	8W-12-20
S231	8W-12-20
S235	8W-15-11
S236	8W-47-11
S237	8W-47-11
S240	8W-39-7
S300	8W-12-15, 16, 17
S302	8W-12-18
S303	8W-12-31
S304	8W-15-18
S306	8W-15-18
S308	8W-12-10
S310	8W-31-3, 10
S311	8W-12-32
S312	8W-12-15, 16, 17
S313	8W-15-17
S314	8W-52-4
S315	8W-33-5
S316	8W-33-5
S317	8W-33-5
S318	8W-12-28
S319	8W-15-10
S322	8W-12-14
S323	8W-12-14
S324	8W-47-7, 8
S326	8W-15-12
S327	8W-63-4
S328	8W-12-19
S329	8W-15-12
S331	8W-15-15
S332	8W-15-12
S333	8W-15-14
S334	8W-15-13
S336	8W-18-4
S338	8W-12-25, 26
S340	8W-47-3
S341	8W-47-3
S342	8W-47-3
S344	8W-47-3
S345	8W-60-4
S346	8W-52-6
S347	8W-21-3
S348	8W-12-18
S349	8W-12-15
S350	8W-12-12
S352	8W-48-2, 30
S353	8W-55-3, 12
S354	8W-55-3, 12
S355	8W-55-3, 12
S356	8W-15-16
S358	8W-70-2, 4, 7
S359	8W-70-7
S360	8W-15-14
S361	8W-62-3, 6
S363	8W-50-17
S365	8W-15-14
S366	8W-15-13
S369	8W-15-9
S370	8W-15-13
S371	8W-49-6
S372	8W-15-21
S373	8W-49-5
S374	8W-15-18
S377	8W-62-6
S378	8W-62-6
S380	8W-15-16
S381	8W-61-8
S382	8W-53-3
S390	8W-12-32
S391	8W-15-20
S392	8W-12-33
S393	8W-18-4
S394	8W-15-16
S395	8W-12-20

2.4L

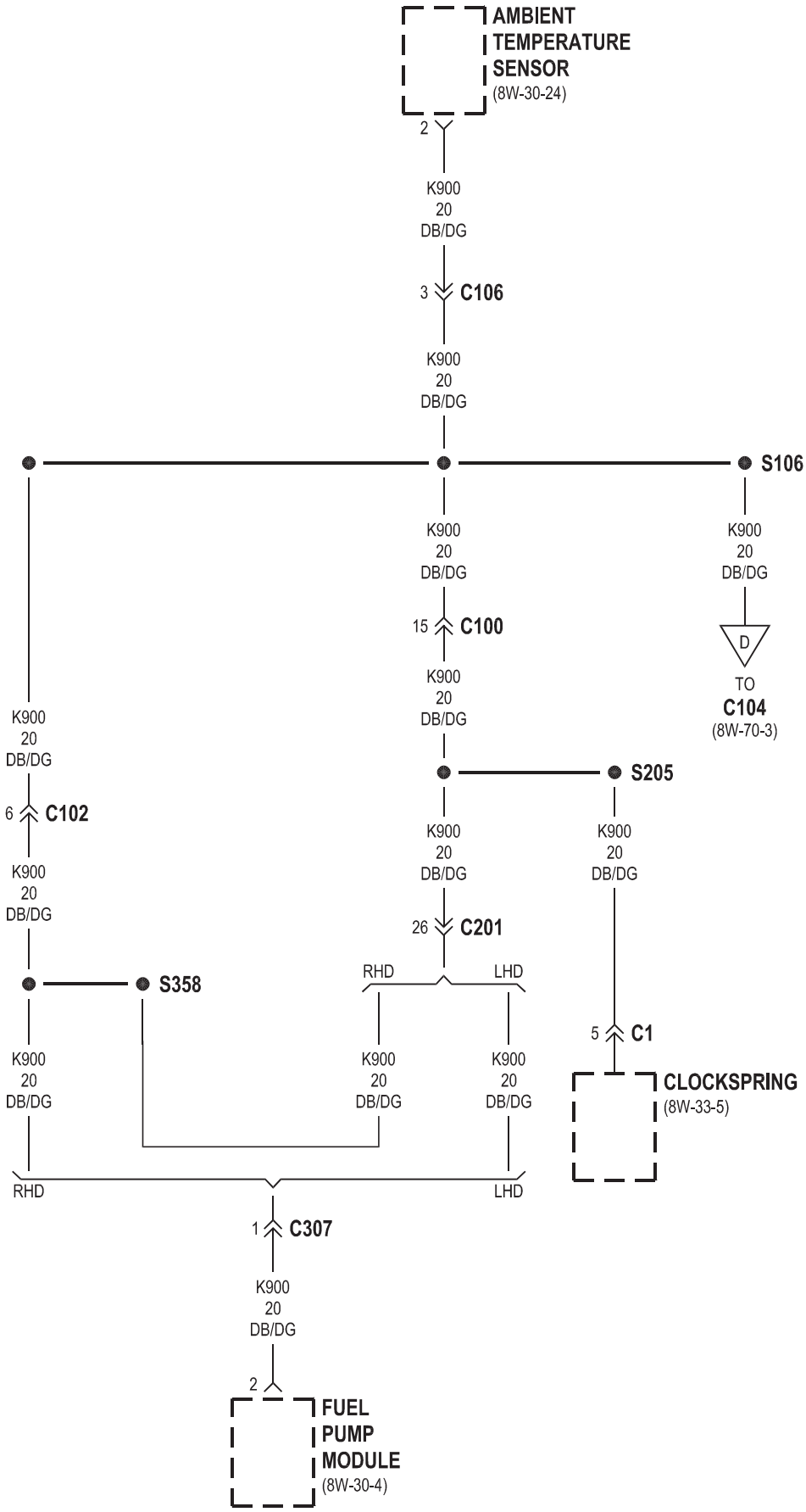
AMBIENT
TEMPERATURE
SENSOR
(8W-30-24)
2
K900
20
DB/DG
3
C106
K900
20
DB/DG
S106
K900
20
DB/DG
K900
20
DB/DG
15
C100
K900
20
DB/DG
D
TO
C104
(8W-70-3)
K900
20
DB/DG
6
C102
K900
20
DB/DG
S205
K900
20
DB/DG
K900
20
DB/DG
26
C201
S358
RHD
LHD
5
C1
K900
20
DB/DG
K900
20
DB/DG
K900
20
DB/DG
CLOCKSPRING
(8W-33-5)
RHD
LHD
1
C307
K900
20
DB/DG
2
FUEL
PUMP
MODULE
(8W-30-4)

2.4L

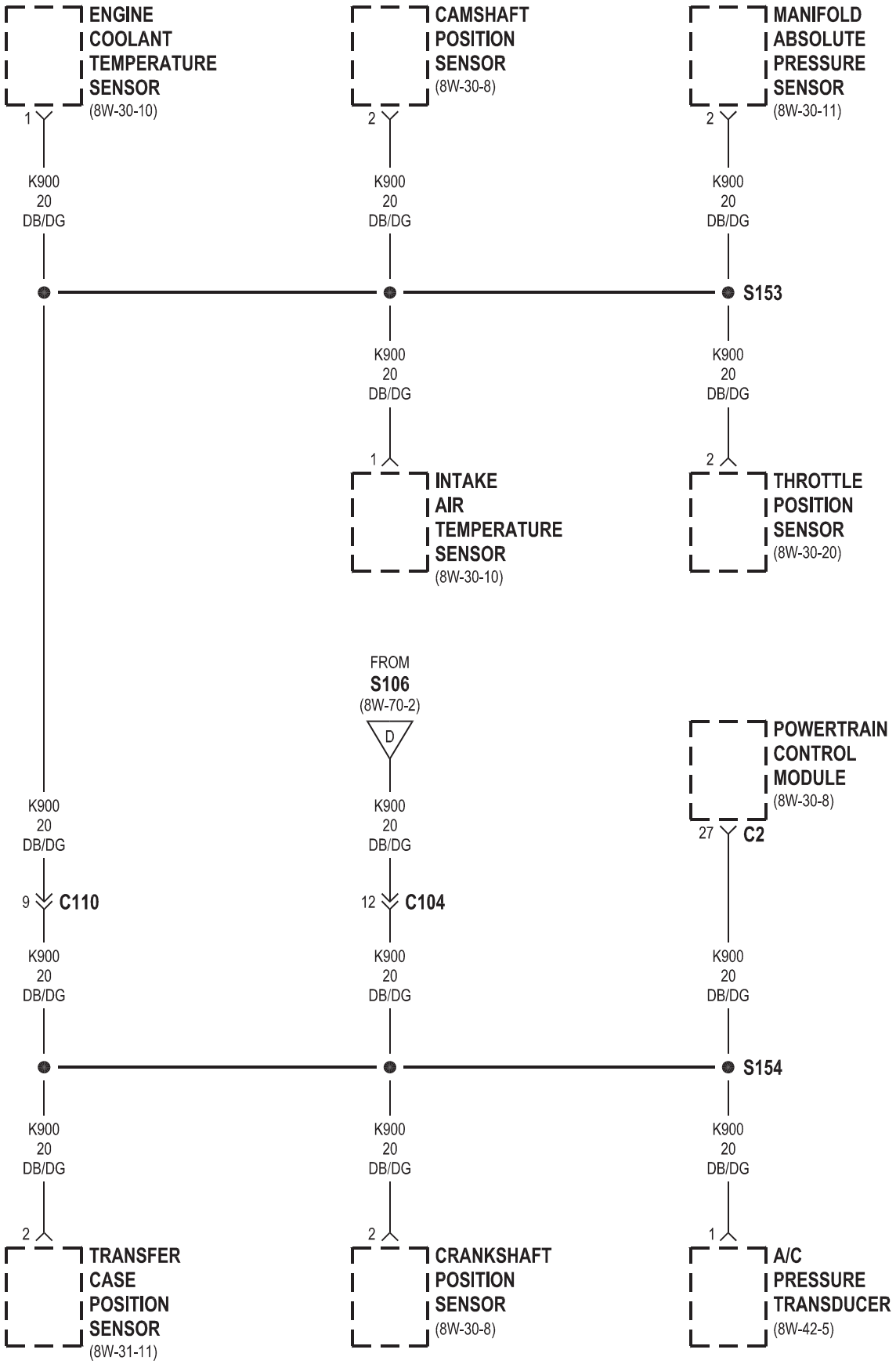
ENGINE COOLANT TEMPERATURE SENSOR (8W-30-10)
CAMSHAFT POSITION SENSOR (8W-30-8)
MANIFOLD ABSOLUTE PRESSURE SENSOR (8W-30-11)
1
2
2
K900 20 DB/DG
K900 20 DB/DG
K900 20 DB/DG
S153
K900 20 DB/DG
K900 20 DB/DG
1
2
INTAKE AIR TEMPERATURE SENSOR (8W-30-10)
THROTTLE POSITION SENSOR (8W-30-20)
FROM S106 (8W-70-2)
D
POWERTRAIN CONTROL MODULE (8W-30-8)
K900 20 DB/DG
K900 20 DB/DG
27
C2
9
C110
12
C104
K900 20 DB/DG
K900 20 DB/DG
K900 20 DB/DG
S154
K900 20 DB/DG
K900 20 DB/DG
K900 20 DB/DG
2
2
1
TRANSFER CASE POSITION SENSOR (8W-31-11)
CRANKSHAFT POSITION SENSOR (8W-30-8)
A/C PRESSURE TRANSDUCER (8W-42-5)

3.7L

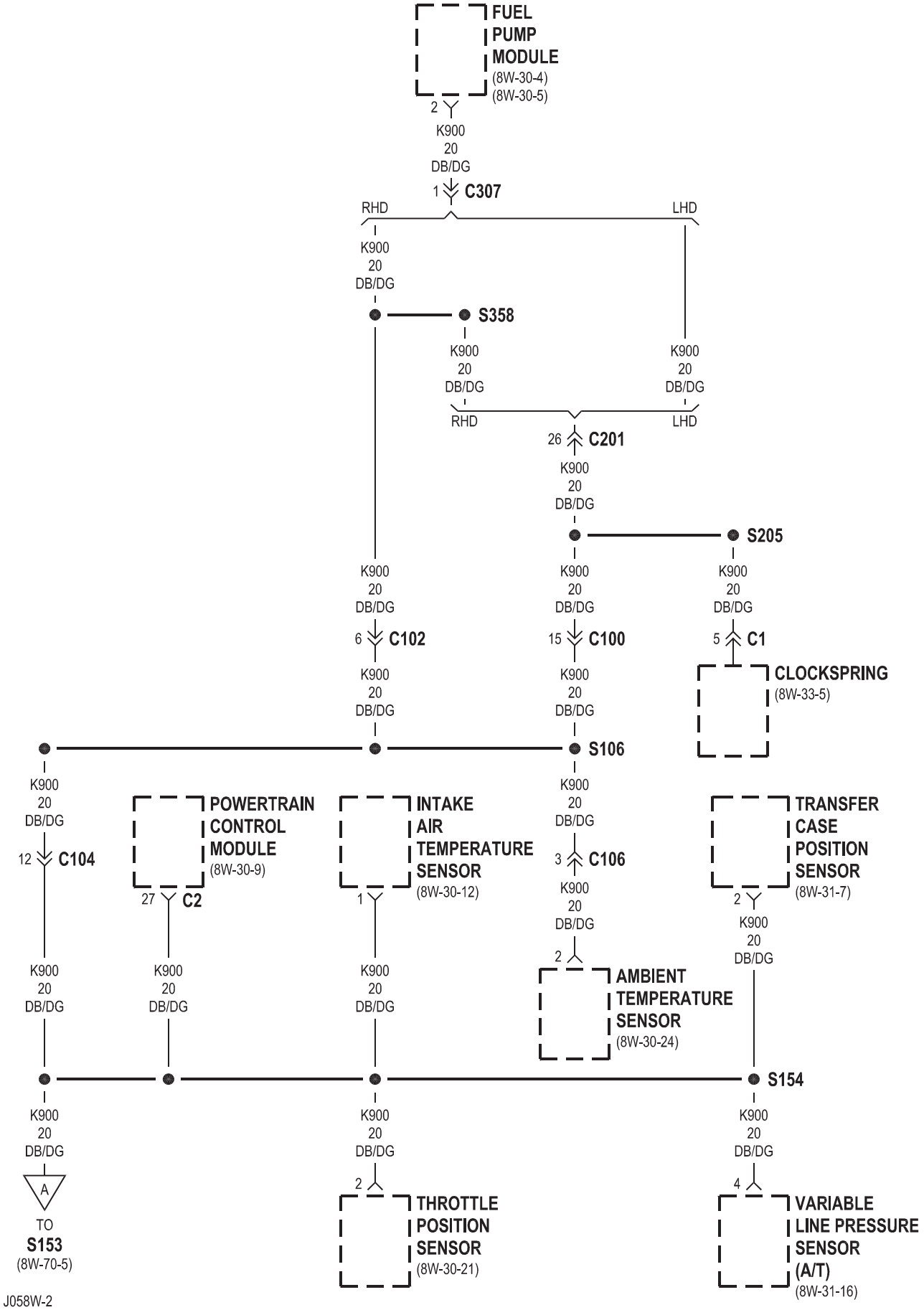

J058W-2 KJ507004

FROM
S154
(8W-70-4)
A
ENGINE
COOLANT
TEMPERATURE
SENSOR
(8W-30-12)
1
CAMSHAFT
POSITION
SENSOR
(8W-30-9)
2
K900
20
DB/DG
K900
20
DB/DG
K900
20
DB/DG
S153
K900
20
DB/DG
K900
20
DB/DG
K900
20
DB/DG
1
A/C
PRESSURE
TRANSDUCER
(8W-42-5)
2
CRANKSHAFT
POSITION
SENSOR
(8W-30-9)
2
MANIFOLD
ABSOLUTE
PRESSURE
SENSOR
(8W-30-13)

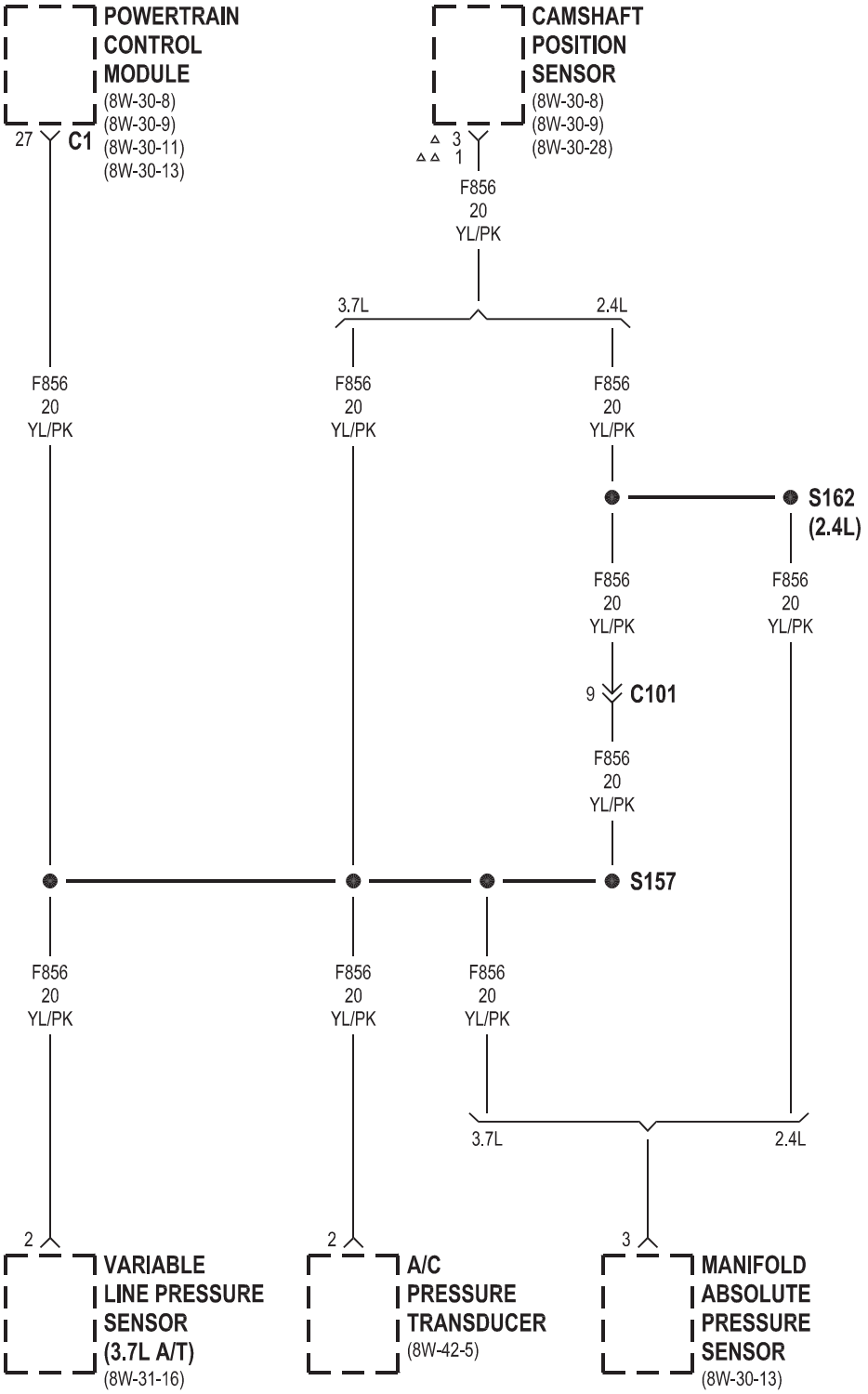
POWERTRAIN CONTROL MODULE
(8W-30-8)
(8W-30-9)
(8W-30-11)
(8W-30-13)
27 C1
CAMSHAFT POSITION SENSOR
(8W-30-8)
(8W-30-9)
(8W-30-28)
△ 3
△△ 1
F856 20 YL/PK
3.7L
2.4L
F856 20 YL/PK
F856 20 YL/PK
F856 20 YL/PK
S162 (2.4L)
F856 20 YL/PK
F856 20 YL/PK
9 C101
F856 20 YL/PK
S157
F856 20 YL/PK
F856 20 YL/PK
F856 20 YL/PK
3.7L
2.4L
2
VARIABLE LINE PRESSURE SENSOR (3.7L A/T)
(8W-31-16)
2
A/C PRESSURE TRANSDUCER
(8W-42-5)
3
MANIFOLD ABSOLUTE PRESSURE SENSOR
(8W-30-13)

△ 3.7L
△△ 2.4L

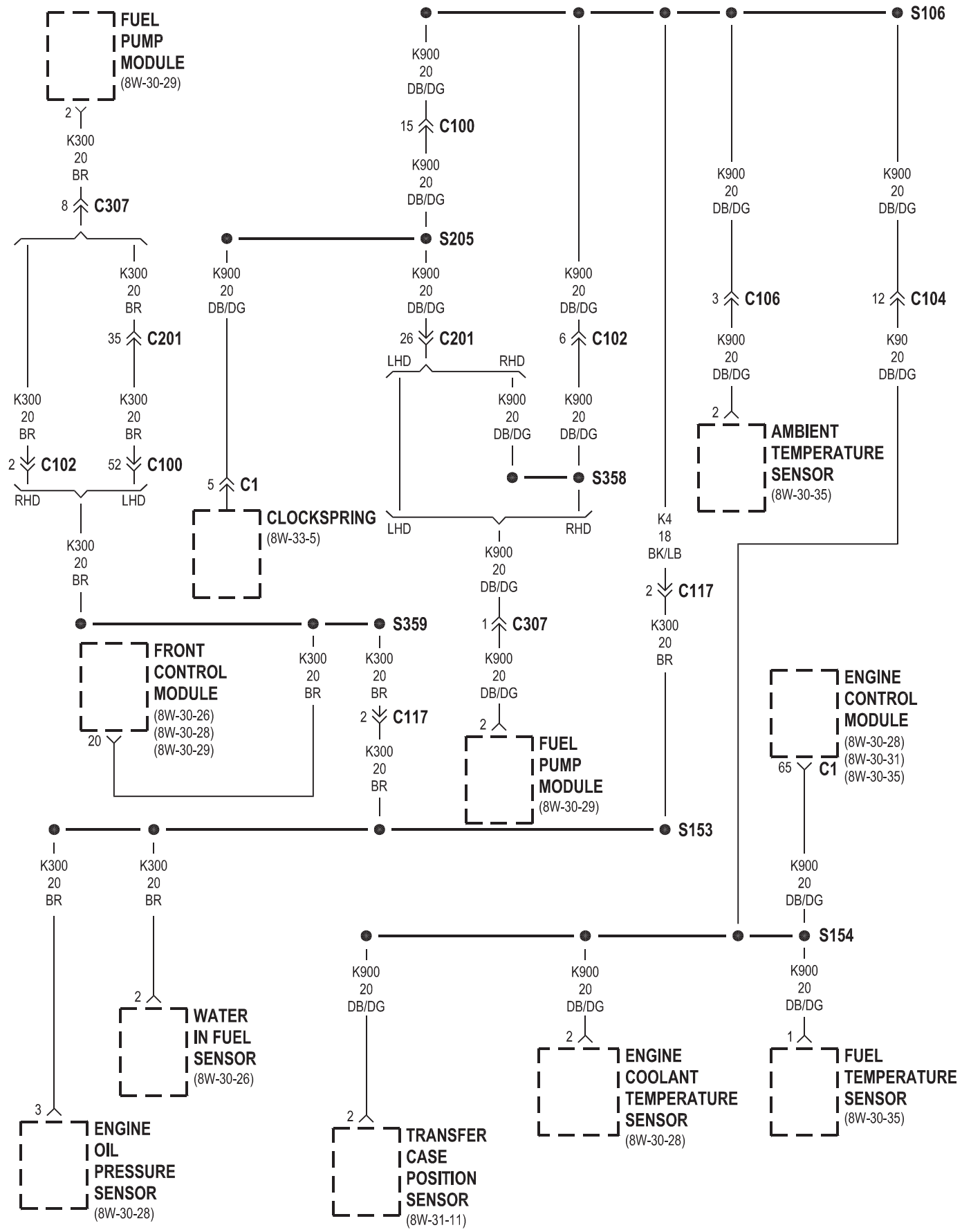
FUEL PUMP MODULE (8W-30-29)
2
K300 20 BR
8 C307
K300 20 BR
35 C201
K300 20 BR
2 C102
52 C100
RHD
LHD
K300 20 BR
K900 20 DB/DG
5 C1
CLOCKSPRING (8W-33-5)
S205
K900 20 DB/DG
26 C201
LHD
RHD
K900 20 DB/DG
S358
K900 20 DB/DG
1 C307
K900 20 DB/DG
2
FUEL PUMP MODULE (8W-30-29)
K900 20 DB/DG
15 C100
K900 20 DB/DG
K900 20 DB/DG
6 C102
K900 20 DB/DG
S106
K900 20 DB/DG
3 C106
K900 20 DB/DG
2
AMBIENT TEMPERATURE SENSOR (8W-30-35)
K900 20 DB/DG
12 C104
K90 20 DB/DG
K4 18 BK/LB
2 C117
K300 20 BR
S359
FRONT CONTROL MODULE (8W-30-26) (8W-30-28) (8W-30-29)
20
K300 20 BR
K300 20 BR
2 C117
K300 20 BR
ENGINE CONTROL MODULE (8W-30-28) (8W-30-31) (8W-30-35)
65 C1
S153
K300 20 BR
K300 20 BR
K900 20 DB/DG
S154
K900 20 DB/DG
K900 20 DB/DG
K900 20 DB/DG
2
WATER IN FUEL SENSOR (8W-30-26)
2
ENGINE COOLANT TEMPERATURE SENSOR (8W-30-28)
1
FUEL TEMPERATURE SENSOR (8W-30-35)
3
ENGINE OIL PRESSURE SENSOR (8W-30-28)
2
TRANSFER CASE POSITION SENSOR (8W-31-11)

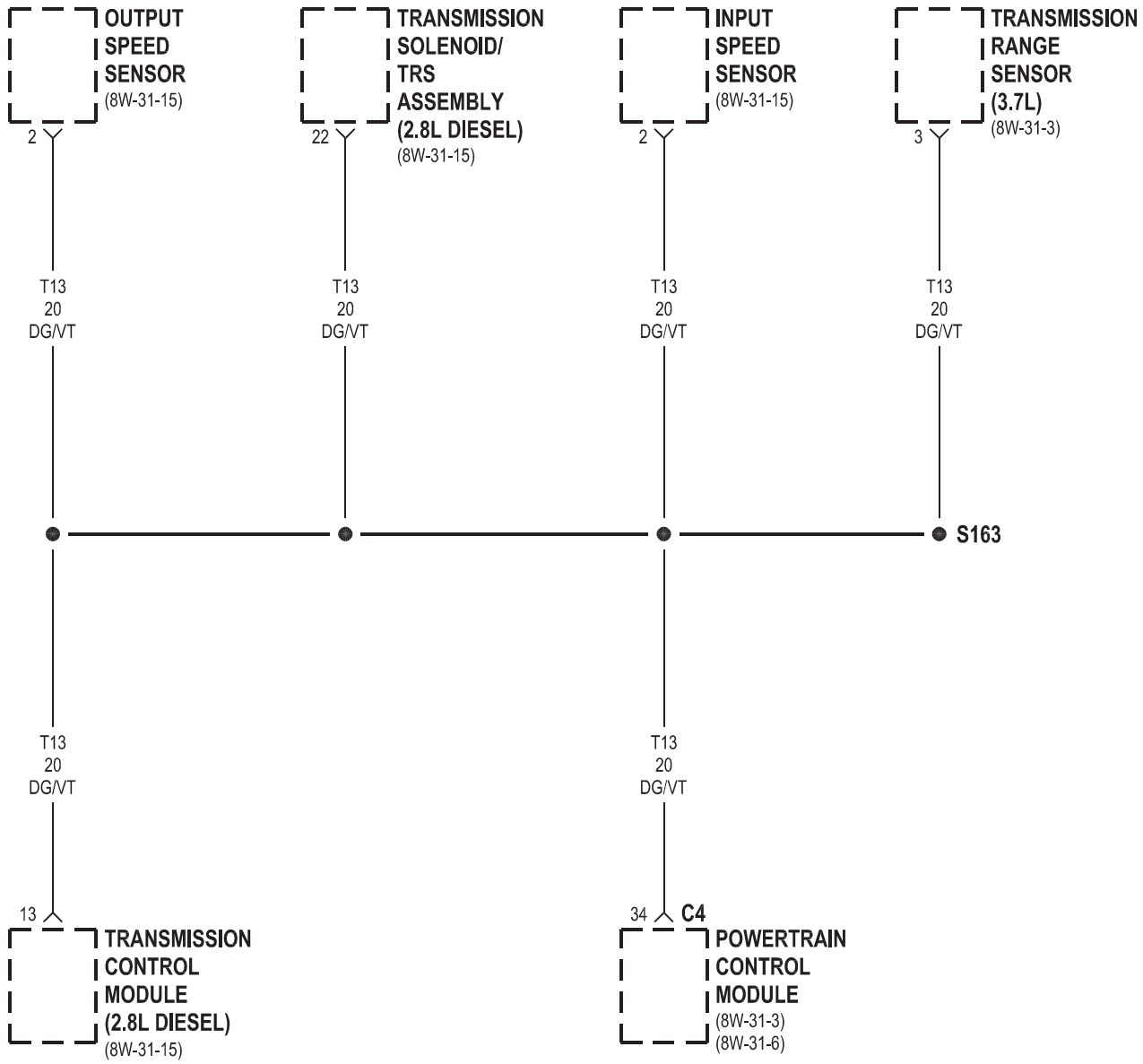
OUTPUT SPEED SENSOR
(8W-31-15)
TRANSMISSION SOLENOID/ TRS ASSEMBLY (2.8L DIESEL)
(8W-31-15)
INPUT SPEED SENSOR
(8W-31-15)
TRANSMISSION RANGE SENSOR (3.7L)
(8W-31-3)
2
22
2
3
T13
20
DG/VT
S163
13
34
C4
TRANSMISSION CONTROL MODULE (2.8L DIESEL)
(8W-31-15)
POWERTRAIN CONTROL MODULE
(8W-31-3)
(8W-31-6)

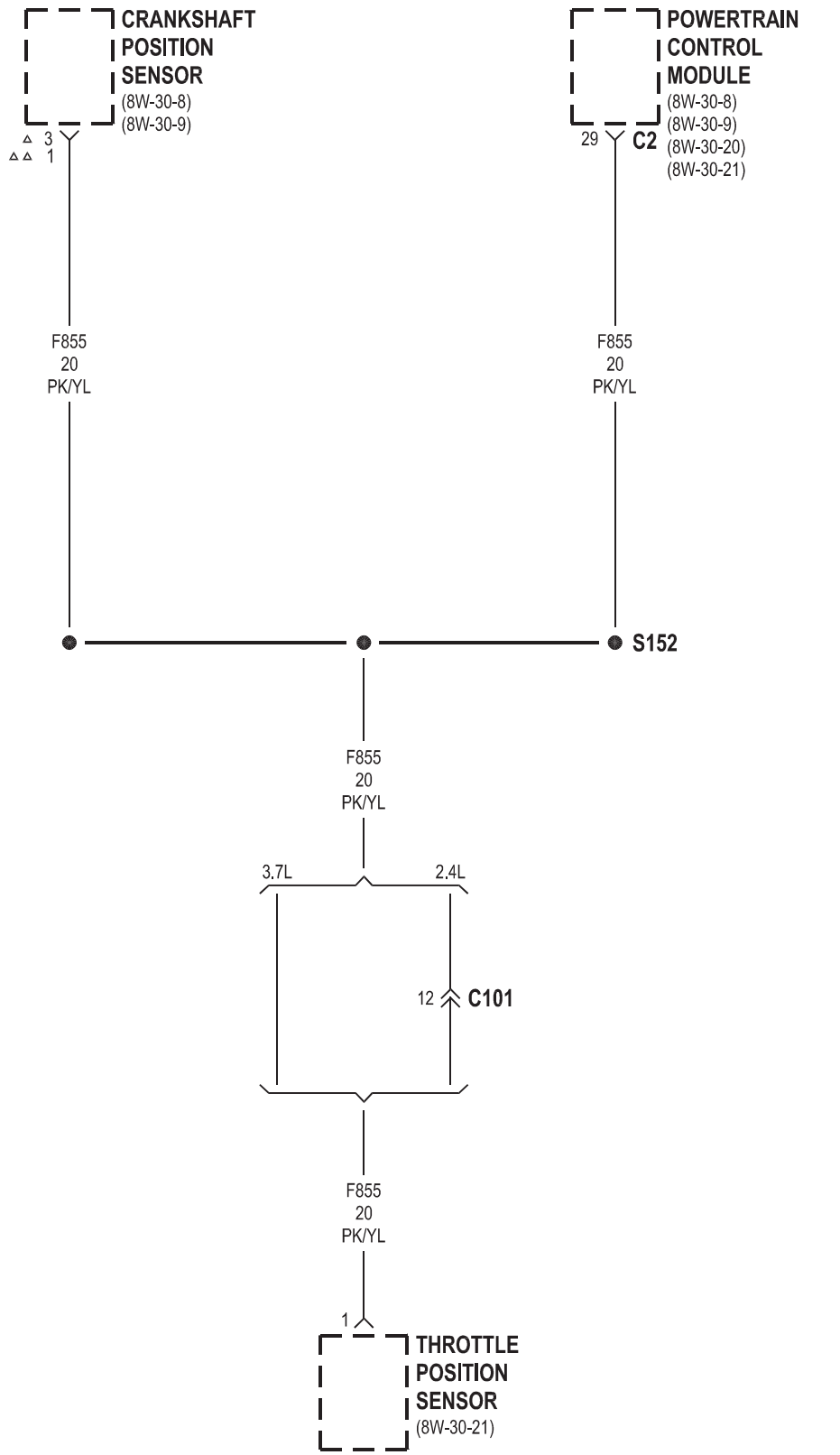
CRANKSHAFT POSITION SENSOR
(8W-30-8)
(8W-30-9)
△ 3
△△ 1
POWERTRAIN CONTROL MODULE
(8W-30-8)
(8W-30-9)
(8W-30-20)
(8W-30-21)
29
C2
F855
20
PK/YL
F855
20
PK/YL
S152
F855
20
PK/YL
3.7L
2.4L
12
C101
F855
20
PK/YL
1
THROTTLE POSITION SENSOR
(8W-30-21)

△ 3.7L
△△ 2.4L

8W-80 CONNECTOR PIN-OUTS

Component	Page
A/C Compressor Clutch	8W-80-5
A/C High Pressure Switch (Diesel)	8W-80-5
A/C Low Pressure Switch	8W-80-5
A/C Pressure Transducer	8W-80-5
A/C-Heater Control C1	8W-80-5
A/C-Heater Control C2	8W-80-6
Accelerator Pedal Position Sensor (Diesel)	8W-80-6
Airbag Control Module C1 (ORC)	8W-80-6
Airbag Control Module C2 (ORC)	8W-80-7
Ambient Temperature Sensor	8W-80-7
Antenna (Except Export)	8W-80-7
Antenna Module C1 (Export)	8W-80-8
Anti-lock Brake Module	8W-80-8
Automatic Day/Night Mirror C1	8W-80-9
Automatic Day/Night Mirror C2 (Hands Free)	8W-80-9
Back-Up Lamp Switch (M/T)	8W-80-9
Belt Tension Sensor	8W-80-9
Blend Door Actuator	8W-80-10
Blower Motor	8W-80-10
Blower Motor Resistor Block	8W-80-10
Body Control Module C1	8W-80-11
Body Control Module C2	8W-80-11
Boost Pressure Solenoid (Diesel)	8W-80-12
Brake Lamp Switch	8W-80-12
C100 (LHD)	8W-80-12
C100 (LHD)	8W-80-14
C100 (RHD)	8W-80-15
C100 (RHD)	8W-80-17
C101 (2.4L)	8W-80-18
C101 (2.4L)	8W-80-18
C102 (RHD)	8W-80-18
C102 (RHD)	8W-80-19
C104	8W-80-19
C104	8W-80-20
C105 (Diesel)	8W-80-20
C105 (Diesel)	8W-80-21
C105 (Gas)	8W-80-21
C105 (Gas)	8W-80-21
C106	8W-80-22
C106	8W-80-22
C107	8W-80-22
C107	8W-80-23
C108 (Gas)	8W-80-23
C108 (Gas)	8W-80-23
C109	8W-80-23
C109	8W-80-24
C110 (2.4L M/T)	8W-80-24
C110 (2.4L)	8W-80-24
C111 (Diesel)	8W-80-25
C111 (Diesel)	8W-80-25
C112	8W-80-25
C112	8W-80-26
C113 (Diesel)	8W-80-26
C113 (Diesel)	8W-80-26
C114	8W-80-26
C114	8W-80-27
C114 (Diesel)	8W-80-27
C114 (Diesel)	8W-80-27
C117 (Diesel)	8W-80-27
C117 (Diesel)	8W-80-28
C201	8W-80-28
C201	8W-80-29
C203 (renegade)	8W-80-30
C203 (renegade)	8W-80-30
C300 (LHD)	8W-80-31
C300 (RHD)	8W-80-31
C300 (RHD)	8W-80-31
C300 (LHD)	8W-80-32
C301 (RHD)	8W-80-32
C301 (RHD)	8W-80-33
C301 (LHD)	8W-80-33
C301 (LHD)	8W-80-34
C302 (LHD)	8W-80-34
C302 (RHD Premium)	8W-80-35
C302 (LHD Premium)	8W-80-35
C302 (RHD)	8W-80-36
C303 (RHD Except Base)	8W-80-36
C303 (RHD)	8W-80-37
C303 (LHD)	8W-80-37
C303 (LHD Except Base)	8W-80-38
C304	8W-80-38
C304	8W-80-39
C305	8W-80-39
C305	8W-80-40
C307	8W-80-40
C307	8W-80-40
C308	8W-80-41
C308	8W-80-41
C309	8W-80-42
C309	8W-80-42
C310	8W-80-42
C310	8W-80-43
C311	8W-80-43
C311	8W-80-43
C312	8W-80-44
C312	8W-80-44
C313	8W-80-44
C313	8W-80-45
C314 (Heated Seats)	8W-80-45
C314	8W-80-45
C315 (LHD Midline/Highline)	8W-80-46
C315 (LHD Midline/Highline)	8W-80-46
C315 (RHD Midline/Highline)	8W-80-46

Component	Page
C315 (RHD Midline/Highline)	8W-80-46
C316 (Export)	8W-80-46
C318	8W-80-47
C318	8W-80-47
C320 (LHD)	8W-80-47
C320 (RHD)	8W-80-48
C321 (LHD Except Base)	8W-80-49
C321 (RHD)	8W-80-50
C328	8W-80-50
C328	8W-80-51
C330	8W-80-51
C330	8W-80-51
Cabin Heater (Diesel)	8W-80-51
Camshaft Position Sensor (2.4L)	8W-80-51
Camshaft Position Sensor (3.7L)	8W-80-52
Camshaft Position Sensor (Diesel)	8W-80-52
Cargo Lamp (Except Base)	8W-80-52
CD Changer	8W-80-52
Center High Mounted Stop Lamp	8W-80-53
Cigar Lighter	8W-80-53
Circuit Breakers (JB)	8W-80-53
Clockspring C1	8W-80-53
Clockspring C2	8W-80-54
Clockspring C3	8W-80-54
Clutch Interlock/Upstop Switch (M/T)	8W-80-54
Coil On Plug No. 1 (3.7L)	8W-80-54
Coil On Plug No. 2 (3.7L)	8W-80-55
Coil On Plug No. 3 (3.7L)	8W-80-55
Coil On Plug No. 4 (3.7L)	8W-80-55
Coil On Plug No. 5 (3.7L)	8W-80-55
Coil On Plug No. 6 (3.7L)	8W-80-56
Coil Rail (2.4L)	8W-80-56
Compass Mini-Trip Computer (Premium)	8W-80-56
Crankshaft Position Sensor (2.4L)	8W-80-56
Crankshaft Position Sensor (3.7L)	8W-80-57
Crankshaft Position Sensor (Diesel)	8W-80-57
Data Link Connector	8W-80-57
Dome Lamp (Base)	8W-80-58
Driver Airbag Squib 1	8W-80-58
Driver Airbag Squib 2	8W-80-58
Driver Door Lock Motor/Ajar Switch (Except Base)	8W-80-58
Driver Power Mirror (Except Base)	8W-80-59
Driver Seat Belt Tensioner	8W-80-59
Egr Air Flow Control Valve (Diesel)	8W-80-59
Egr Solenoid (Diesel)	8W-80-59
Engine Control Module C1 (Diesel)	8W-80-60
Engine Control Module C2 (Diesel)	8W-80-62
Engine Coolant Level Sensor (Diesel)	8W-80-63
Engine Coolant Temperature Sensor (Diesel)	8W-80-63
Engine Coolant Temperature Sensor (Gas)	8W-80-63
Engine Oil Pressure Sensor (Diesel)	8W-80-63
Engine Oil Pressure Switch (Gas)	8W-80-64
EVAP/Purge Solenoid (Gas)	8W-80-64
Flip-Up Glass Release Motor	8W-80-64
Flip-Up Glass Release Switch	8W-80-64
Front Control Module (Diesel)	8W-80-65
Front Wiper Motor	8W-80-65
Fuel Heater (Diesel)	8W-80-66
Fuel Injector No. 1 (Diesel)	8W-80-66
Fuel Injector No. 1 (Gas)	8W-80-66
Fuel Injector No. 2 (Diesel)	8W-80-66
Fuel Injector No. 2 (Gas)	8W-80-67
Fuel Injector No. 3 (Diesel)	8W-80-67
Fuel Injector No. 3 (Gas)	8W-80-67
Fuel Injector No. 4 (Diesel)	8W-80-67
Fuel Injector No. 4 (Gas)	8W-80-68
Fuel Injector No. 5 (3.7L)	8W-80-68
Fuel Injector No. 6 (3.7L)	8W-80-68
Fuel Pressure Sensor (Diesel)	8W-80-68
Fuel Pressure Solenoid (Diesel)	8W-80-69
Fuel Pump Module	8W-80-69
Fuel Quantity Solenoid (Diesel)	8W-80-69
Fuel Temerature Sensor (Diesel)	8W-80-69
G202	8W-80-70
Generator	8W-80-70
Glow Plug Module (Diesel)	8W-80-70
Hands Free Module C1	8W-80-71
Hands Free Module C2 (Satellite)	8W-80-71
Hands Free Module C3	8W-80-71
Hazard Switch/combination Flasher	8W-80-72
Headlamp Leveling Switch (Export)	8W-80-72
Heated Seat Module (Highline)	8W-80-72
High Beam Relay	8W-80-73
High Note Horn	8W-80-74
Hood Ajar Switch (Except Base)	8W-80-74
Idle Air Control Motor	8W-80-74
Ignition Switch	8W-80-74
Input Speed Sensor (A/T)	8W-80-75
Instrument Cluster	8W-80-75
Intake Air Temperature Sensor (Gas)	8W-80-75
Intake Air Temperature/boost Pressure Sensor (Diesel)	8W-80-76
Intake Pressure Sensor (Diesel)	8W-80-76
Intrusion Transceiver Module (Export)	8W-80-76
Junction Block Body Control Module-JB	8W-80-77
Junction Block C1	8W-80-78
Junction Block C2	8W-80-79
Junction Block C3	8W-80-80
Knock Sensor (3.7L)	8W-80-81
Left Courtesy Lamp	8W-80-81
Left Curtain Airbag Squib 1	8W-80-81
Left Door Lock Switch (Except Base)	8W-80-81
Left Fog Lamp	8W-80-82
Left Front Door Speaker (Base)	8W-80-82
Left Front Door Speaker (Premium)	8W-80-82

Component	Page
Left Front Impact Sensor	8W-80-82
Left Front Park/Turn Signal Lamp (Export)	8W-80-83
Left Front Park/Turn Signal Lamp (Except Export)	8W-80-83
Left Front Power Window Motor (Midline/ Highline)	8W-80-83
Left Front Wheel Speed Sensor (ABS)	8W-80-84
Left Headlamp (Except Export)	8W-80-84
Left Headlamp (Export)	8W-80-84
Left Heated Seat Assembly (Highline)	8W-80-84
Left Heated Seat Switch (Highline)	8W-80-85
Left Instrument Panel Speaker (Premium)	8W-80-85
Left Instrument Panel Speaker (Base)	8W-80-85
Left Leveling Motor (Export)	8W-80-85
Left Power Seat Motors (Midline/ Highline)	8W-80-86
Left Power Seat Switch (Midline/ Highline)	8W-80-86
Left Rear Door Lock Motor/Ajar Switch (Except Base)	8W-80-86
Left Rear Door Speaker (Premium)	8W-80-87
Left Rear Power Window Motor (Premium)	8W-80-87
Left Remote Radio Switch (Premium)	8W-80-87
Left Side Impact Sensor 1	8W-80-87
Left Side Marker Lamp (Except Export)	8W-80-88
Left Speed Control Switch (Except Base)	8W-80-88
Left Tail/Stop Lamp	8W-80-88
Left Visor/Vanity Lamp (Except Base)	8W-80-88
License Lamp (Except Export)	8W-80-89
License Lamp (Export)	8W-80-89
Lightbar Lamp No. 1	8W-80-89
Lightbar Lamp No. 2	8W-80-89
Lightbar Lamp No. 3	8W-80-89
Lightbar Lamp No. 4	8W-80-90
Lightbar Switch (renegade)	8W-80-90
Line Pressure Sensor (2.8L 45RFE)	8W-80-90
Manifold ABSolute Pressure Sensor (Gas)	8W-80-90
Mass Air Flow Sensor (Diesel)	8W-80-91
Multi-Function Switch C1	8W-80-91
Multi-Function Switch C2	8W-80-91
Natural Vacuum Leak Detection Pump (Gas)	8W-80-91
Occupant Classification Module	8W-80-92
Output Speed Sensor (A/T)	8W-80-92
Overhead Map/reading Lamp	8W-80-92
Oxygen Sensor 1/1 Upstream (2.4L)	8W-80-93
Oxygen Sensor 1/1 Upstream (3.7L)	8W-80-93
Oxygen Sensor 1/2 Downstream	8W-80-93
Oxygen Sensor 2/1 Upstream (3.7L)	8W-80-93
Oxygen Sensor 2/2 Downstream (3.7L)	8W-80-94
Passenger Airbag On/Off Indicator	8W-80-94
Passenger Airbag Squib 1	8W-80-94
Passenger Airbag Squib 2	8W-80-94
Passenger Door Lock Motor/Ajar Switch (Except Base)	8W-80-95
Passenger Power Mirror (Except Base)	8W-80-95
Passenger Seat Belt Pretensioner	8W-80-95
Passenger Seat Weight Sensor	8W-80-95
Power Mirror Switch (Except Base)	8W-80-96
Power Steering Pressure Switch	8W-80-96
Power Window Master Switch	8W-80-96
Powertrain Control Module C1	8W-80-97
Powertrain Control Module C2	8W-80-98
Powertrain Control Module C3 (3.7L)	8W-80-99
Powertrain Control Module C4 (3.7L A/T)	8W-80-100
Radiator Fan Motor	8W-80-101
Radio C1	8W-80-101
Radio C2	8W-80-101
Radio C3 (Except Export)	8W-80-102
Radio Choke (Midline/Premium)	8W-80-102
Rear Power Outlet	8W-80-102
Rear Power Window Switch	8W-80-102
Rear Wheel Speed Sensor	8W-80-103
Rear Wiper Motor	8W-80-103
Red Brake Warning Indicator Switch	8W-80-103
Right Courtesy Lamp	8W-80-103
Right Curtain Airbag Squib 1	8W-80-103
Right Door Lock Switch (Except Base)	8W-80-104
Right Fog Lamp	8W-80-104
Right Front Door Speaker (Base)	8W-80-104
Right Front Door Speaker (Premium)	8W-80-104
Right Front Impact Sensor	8W-80-105
Right Front Park/Turn Signal Lamp (Export)	8W-80-105
Right Front Park/Turn Signal Lamp (Except Export)	8W-80-105
Right Front Power Window Motor (Midline/ Highline)	8W-80-106
Right Front Wheel Speed Sensor (ABS)	8W-80-106
Right Headlamp (Except Export)	8W-80-106
Right Headlamp (Export)	8W-80-106
Right Heated Seat Assembly (Highline)	8W-80-107
Right Heated Seat Switch (Highline)	8W-80-107
Right Instrument Panel Speaker (Premium)	8W-80-107
Right Instrument Panel Speaker (Base)	8W-80-107
Right Leveling Motor (Export)	8W-80-107
Right Power Seat Motors (Midline/ Highline)	8W-80-108
Right Power Seat Switch (Midline/ Highline)	8W-80-108
Right Rear Door Lock Motor/Ajar Switch (Except Base)	8W-80-108
Right Rear Door Speaker (Premium)	8W-80-109

Component	Page
Right Rear Power Window Motor (Premium)	8W-80-109
Right Remote Radio Switch (Premium)	8W-80-109
Right Side Impact Sensor 1	8W-80-109
Right Side Marker Lamp (Except Export)	8W-80-110
Right Speed Control Switch (Except Base)	8W-80-110
Right Tail/Stop Lamp	8W-80-110
Right Visor/Vanity Lamp (Except Base)	8W-80-110
Satellite Receiver	8W-80-111
Sentry Key Immobilizer Module (Except Base)	8W-80-111
Shifter Assembly	8W-80-111
Siren (Export)	8W-80-112
Speed Control Servo	8W-80-112
Sunroof Motor	8W-80-112
Sunroof Switch	8W-80-112
Tailgate Cylinder Lock Switch	8W-80-113
Tailgate Flip-Up Ajar Switch	8W-80-113
Tailgate Lock Motor/Ajar Switch	8W-80-113
Throttle Position Sensor (Gas)	8W-80-113
Trailer Tow Brake Lamp Relay	8W-80-114
Trailer Tow Connector	8W-80-114
Trailer Tow Left Turn Relay	8W-80-114
Trailer Tow Relay	8W-80-115
Trailer Tow Right Turn Relay	8W-80-115
Transfer Case Position Sensor	8W-80-115
Transmission Control Module (2.8L)	8W-80-116
Transmission Range Sensor (42RLE)	8W-80-117
Transmission Solenoid/Pressure Switch Assembly (42RLE)	8W-80-117
Transmission Solenoid/TRS Assembly (2.8L 45RFE)	8W-80-117
Transponder-tire Pressure-Left Front (Except 2.5L)	8W-80-118
Transponder-tire Pressure-Right Front (Except 2.5L)	8W-80-118
Transponder-tire Pressure-Right Rear (Except 2.5L)	8W-80-118
Vacuum Reservoir Solenoid (Diesel)	8W-80-118
Variable Line Pressure Sensor (3.7L)	8W-80-119
Washer Fluid Level Switch	8W-80-119
Washer Pump	8W-80-119
Water In Fuel Sensor (Diesel)	8W-80-119

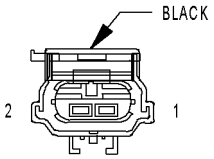

A/C COMPRESSOR CLUTCH

A/C COMPRESSOR CLUTCH - BLACK 2 WAY

CAV	CIRCUIT	FUNCTION
1	C3 18DB/YL	A/C CLUTCH RELAY OUTPUT
2	Z939 18BK	GROUND

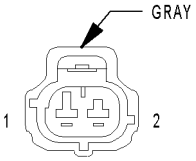

A/C HIGH PRESSURE SWITCH (DIESEL)

A/C HIGH PRESSURE SWITCH (DIESEL) - GRAY 2 WAY

CAV	CIRCUIT	FUNCTION
1	C18 20DB	A/C PRESSURE SIGNAL
2	C21 18DB/OR	A/C LOW PRESSURE SWITCH SIGNAL

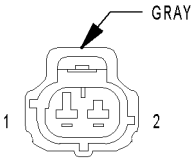

A/C LOW PRESSURE SWITCH

A/C LOW PRESSURE SWITCH - GRAY 2 WAY

CAV	CIRCUIT	FUNCTION
1	C20 18DB/YL	A/C SWITCH SENSE
2	Z937 20BK (LHD)	GROUND
2	Z932 18BK (RHD)	GROUND

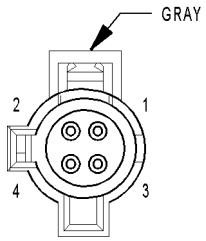

A/C PRESSURE TRANSDUCER

A/C PRESSURE TRANSDUCER - BLACK 4 WAY

CAV	CIRCUIT	FUNCTION
1	K310 20BR/DG (DIESEL)	A/C PRESSURE SENSOR GROUND
1	K900 20DB/DG (GAS)	SENSOR GROUND
2	K301 20BR/LG (DIESEL)	5 VOLT SUPPLY
2	F856 20YL/PK (GAS)	5 VOLT SUPPLY
3	K305 20BR/LB (DIESEL)	A/C PRESSURE SENSOR SIGNAL
3	C18 20LB/BR (GAS)	A/C PRESSURE SIGNAL
4	-	-

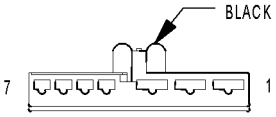

A/C-HEATER CONTROL C1

A/C-HEATER CONTROL C1 - BLACK 7 WAY

CAV	CIRCUIT	FUNCTION
1	Z134 12BK/LG	GROUND
2	C75 12DB/GY	BLOWER MOTOR HIGH DRIVER
3	C73 14DB/VT	BLOWER MOTOR M2 DRIVER
4	C72 16DB/OR	BLOWER MOTOR M1 DRIVER
5	C71 16DB/BR	BLOWER MOTOR LOW DRIVER
6	C221 20LB/OR	A/C ON/OFF CONTROL
7	E2 20OR/BR	PANEL LAMPS DRIVER

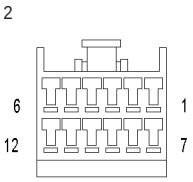

A/C-HEATER CONTROL C2

A/C-HEATER CONTROL C2 - 12 WAY

CAV	CIRCUIT	FUNCTION
1	C35 20BR/OR	MODE DOOR DRIVER (A)
2	F302 20GY/PK	FUSED IGNITION SWITCH OUTPUT (RUN)
3	-	-
4	-	-
5	-	-
6	C215 20LB	REAR WINDOW DEFOGGER CONTROL
7	-	-
8	Z945 18BK	GROUND
9	-	-
10	-	-
11	-	-
12	C16 20DB/GY	FUSED REAR WINDOW DEFOGGER RELAY OUTPUT

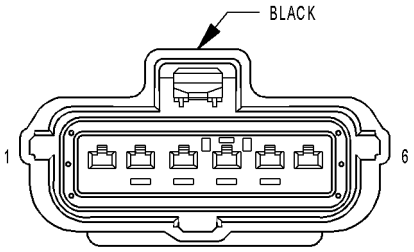

ACCELERATOR PEDAL POSITION SENSOR

ACCELERATOR PEDAL POSITION SENSOR (DIESEL) - BLACK 6 WAY

CAV	CIRCUIT	FUNCTION
1	K854 20VT/BR	ACCELERATOR PEDAL POSITION SENSOR 5 VOLT SUPPLY 2
2	K29 20 WT/BR	ACCELERATOR PEDAL POSITION SENSOR SIGNAL 2
3	K400 20BR/VT	ACCELERATOR PEDAL POSITION SENSOR GROUND 2
4	K167 20BR/YL	ACCELERATOR PEDAL POSITION SENSOR GROUND 1
5	K23 20BR/WT	ACCELERATOR PEDAL POSITION SENSOR SIGNAL 1
6	K852 20BR/VT	ACCELERATOR PEDAL POSITION SENSOR 5 VOLT SUPPLY 1

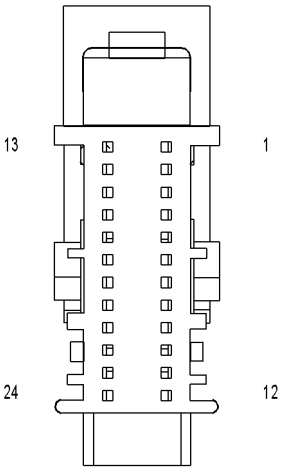

AIRBAG CONTROL MODULE C1 (ORC)

AIRBAG CONTROL MODULE C1 (ORC) - 24 WAY

CAV	CIRCUIT	FUNCTION
1	-	-
2	-	-
3	D25 20WT/VT	PCI BUS
4	-	-
5	-	-
6	R166 20LG/TN	PASSENGER AIRBAG INDICATOR DRIVER
7	-	-
8	-	-
9	R81 20LB/WT	LEFT FRONT IMPACT SENSOR GROUND
10	R79 20LB/VT	LEFT FRONT IMPACT SENSOR SIGNAL
11	R82 20WT/LB	RIGHT FRONT IMPACT SENSOR GROUND
12	R80 20VT/LB	RIGHT FRONT IMPACT SENSOR SIGNAL
13	-	-
14	-	-
15	-	-
16	-	-
17	R43 20LG/BR	DRIVER SQUIB 1 LINE 1
18	R45 20LG/OR	DRIVER SQUIB 1 LINE 2
19	R44 20LB/OR	PASSENGER SQUIB 1 LINE 2
20	R42 20LB/BR	PASSENGER SQUIB 1 LINE 1
21	R61 20LG/VT	DRIVER SQUIB 2 LINE 1
22	R63 20LG/WT	DRIVER SQUIB 2 LINE 2
23	R64 20LB/WT	PASSENGER SQUIB 2 LINE 1
24	R62 20LB/VT	PASSENGER SQUIB 2 LINE 2

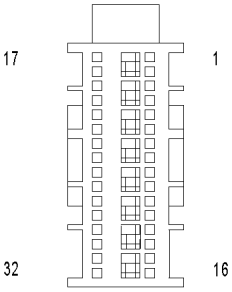

AIRBAG CONTROL MODULE C2 (ORC)

AIRBAG CONTROL MODULE C2 (ORC) - 32 WAY

CAV	CIRCUIT	FUNCTION
1	-	-
2	-	-
3	-	-
4	-	-
5	-	-
6	-	-
7	-	-
8	-	-
9	R53 20LG/YL	DRIVER SEAT BELT TENSIONER LINE 2
10	R55 20LG/DG	DRIVER SEAT BELT TENSIONER LINE 1
11	R56 20LB/DG	PASSENGER SEAT BELT TENSIONER LINE 1
12	R54 20LB/YL	PASSENGER SEAT BELT TENSIONER LINE 2
13	R1 20LB/BR (SAB)	LEFT CURTAIN SQUIB 1 LINE 2
14	R3 20LB/OR (SAB)	LEFT CURTAIN SQUIB 1 LINE 1
15	R4 20OR/LB (SAB)	RIGHT CURTAIN SQUIB 1 LINE 1
16	R2 20WT/LB (SAB)	RIGHT CURTAIN SQUIB 1 LINE 2
17	F201 20PK/OR	FUSED IGNITION SWITCH OUTPUT (RUN-START)
18	F100 20PK/VT	FUSED IGNITION SWITCH OUTPUT (RUN)
19	-	-
20	Z104 20BK/LG	GROUND
21	R59 20LG/TN	DRIVER SEAT BELT SWITCH GROUND
22	R57 20LG/GY	DRIVER SEAT BELT SWITCH SENSE
23	-	-
24	-	-
25	-	-
26	-	-
27	R14 20TN/LG (SAB)	RIGHT SIDE IMPACT SENSOR 1 SIGNAL
28	R16 20BR/LG	RIGHT SIDE IMPACT SENSOR 1 GROUND
29	R15 20LG/BR	LEFT SIDE IMPACT SENSOR 1 GROUND
30	R13 20LG/VT	LEFT SIDE IMPACT SENSOR 1 SIGNAL
31	-	-
32	-	-

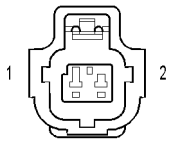

AMBIENT TEMPERATURE SENSOR

AMBIENT TEMPERATURE SENSOR - 2 WAY

CAV	CIRCUIT	FUNCTION
1	G31 20VT/OR	AAT SIGNAL
2	K900 20DB/DG	SENSOR GROUND

CONNECTOR NOT AVAILABLE

ANTENNA (EXCEPT EXPORT) - 2 WAY

CAV	CIRCUIT	FUNCTION
1	D5 20WT/OR	RADIO ANTENNA CORE
2	D931 20WT/YL	RADIO ANTENNA SHIELD

CONNECTOR NOT AVAILABLE

ANTENNA MODULE C1 (EXPORT) - 2 WAY

CAV	CIRCUIT	FUNCTION
1	Q39 16RD	POWER SUNROOF RELAY OUTPUT
2	-	-

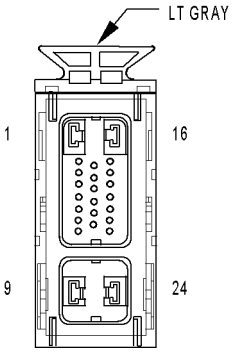

ANTI-LOCK BRAKE MODULE

ANTI-LOCK BRAKE MODULE - 47 WAY

CAV	CIRCUIT	FUNCTION
1	A107 12BK/LB	FUSED B(+)
2	-	-
3	B22 18DG/YL (GAS)	VEHICLE SPEED SIGNAL
4	-	-
5	-	-
6	B15 20DG/WT	BRAKE SWITCH SENSE
7	-	-
8	F22 20PK/TN	FUSED IGNITION SWITCH OUTPUT (RUN)
9	-	-
10	D21 20WT/GY (DIESEL)	SCI TRANSMIT (ECM)
10	D21 20WT/GY (GAS)	SCI TRANSMIT (PCM)
11	D25 18WT/VT	PCI BUS
12	D65 20WT/LG (DIESEL)	CAN C BUS (+)
13	D64 20WT/LB (DIESEL)	CAN C BUS (-)
14	-	-
15	-	-
16	Z127 12BK/DG	GROUND
17	-	-
18	-	-
19	-	-
20	-	-
21	-	-
22	-	-
23	-	-
24	-	-
25	-	-
26		
27	-	-
28	-	-
29	-	-
30	-	-
31	-	-
32	A200 12RD/DG	FUSED B(+)
33	B6 18DG/WT	RIGHT FRONT WHEEL SPEED SENSOR SIGNAL
34	B7 18DG/VT	RIGHT FRONT WHEEL SPEED SENSOR 12 VOLT SUPPLY
35	-	-
36	-	-
37	-	-
38	-	-
39	-	-
40	-	-
41	-	-
42	B1 18YL/DB	REAR WHEEL SPEED SENSOR SIGNAL
43	B2 18YL	REAR WHEEL SPEED SENSOR 12 VOLT SUPPLY
44	-	-
45	B9 18DG/LG	LEFT FRONT WHEEL SPEED SENSOR 12 VOLT SUPPLY
46	B8 18DG/TN	LEFT FRONT WHEEL SPEED SENSOR SIGNAL
47	Z107 12BK/LB	GROUND

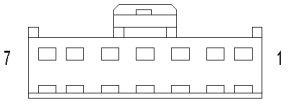

AUTOMATIC DAY/NIGHT MIRROR C1

AUTOMATIC DAY/NIGHT MIRROR C1 - 7 WAY

CAV	CIRCUIT	FUNCTION
1	F942 20PK/LG	FUSED IGNITION SWITCH OUTPUT (RUN-START)
2	Z13 20BK/WT	GROUND
3	L10 20RD	BACK-UP LAMP FEED
4	P112 20RD	AUTO DAY/NIGHT MIRROR (+)
5	P114 20RD	AUTO DAY/NIGHT MIRROR (-)
6	-	-
7	-	-

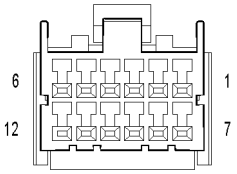

AUTOMATIC DAY/NIGHT MIRROR C2 (HANDS FREE)

AUTOMATIC DAY/NIGHT MIRROR C2 (HANDS FREE) - 12 WAY

CAV	CIRCUIT	FUNCTION
1	-	-
2	-	-
3	-	-
4	X722 20LB/DG	MICROPHONE 2 IN(+)
5	-	-
6	X712 20DG/LB	MICROPHONE 1 IN(+)
7	X793 20DG/YL	IGNITION RUN/ACC SIGNAL
8	-	-
9	X730 20GY/YL	VOICE RECOGNITION/PHONE SWITCH SIGNAL
10	-	-
11	X835 20OR/GY	SENSOR GROUND
12	X792 20LB/DG	MICROPHONE IN(-)

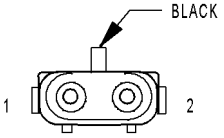

BACK-UP LAMP SWITCH (M/T)

BACK-UP LAMP SWITCH (M/T) - BLACK 2 WAY

CAV	CIRCUIT	FUNCTION
1	C115 20DB	FUSED IGNITION SWITCH OUTPUT (RUN)
2	L10 20WT/GY	BACK-UP LAMP FEED

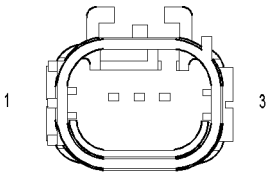

BELT TENSION SENSOR

BELT TENSION SENSOR - 3 WAY

CAV	CIRCUIT	FUNCTION
1	R86 20LG/LB	SEAT BELT TENSION SENSOR POWER
2	R986 20LG/BR	SEAT BELT TENSION SENSOR GROUND
3	D105 20WT/OR	SEAT BELT TENSION SENSOR SIGNAL

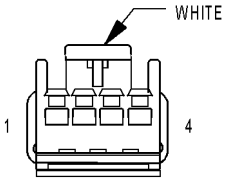

BLEND DOOR ACTUATOR

BLEND DOOR ACTUATOR - WHITE 4 WAY

CAV	CIRCUIT	FUNCTION
1	Z945 18BK	GROUND
2	C35 20LB/OR	MODE DOOR DRIVER (A)
3	F302 20GY/PK	FUSED IGNITION SWITCH OUTPUT (RUN)
4	-	-

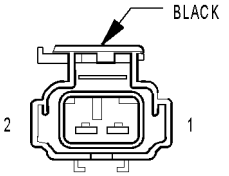

BLOWER MOTOR

BLOWER MOTOR - BLACK 2 WAY

CAV	CIRCUIT	FUNCTION
1	C75 12DB/GY	BLOWER MOTOR HIGH DRIVER
2	A111 12DG/RD	BLOWER MOTOR RELAY OUTPUT

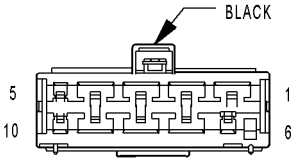

BLOWER MOTOR RESISTOR BLOCK

BLOWER MOTOR RESISTOR BLOCK - BLACK 10 WAY

CAV	CIRCUIT	FUNCTION
1	C75 12DB/GY	BLOWER MOTOR HIGH DRIVER
2	C75 12DB/GY	BLOWER MOTOR HIGH DRIVER
3	C73 14DB/VT	BLOWER MOTOR M2 DRIVER
4	C72 16DB/OR	BLOWER MOTOR M1 DRIVER
5	C71 16DB/BR	BLOWER MOTOR LOW DRIVER
6	-	-
7	-	-
8	-	-
9	-	-
10	-	-

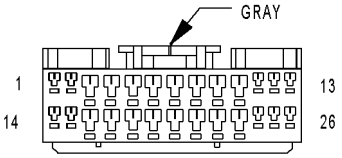

BODY CONTROL MODULE C1

BODY CONTROL MODULE C1 - GRAY 26 WAY

CAV	CIRCUIT	FUNCTION
1	Z15 20BK/TN	GROUND
2	W27 20DB/BR	REAR WIPER INTERMITTENT DRIVER
3	G150 20VT/BR	INSTRUMENT CLUSTER WAKE UP SIGNAL
4	G75 20VT	LEFT FRONT DOOR AJAR SWITCH SENSE
5	G74 20VT/WT	RIGHT FRONT DOOR AJAR SWITCH SENSE
6	G70 20VT/LB (EXCEPT BASE)	HOOD AJAR SWITCH SENSE
7	G78 20VT/OR	TAILGATE AJAR SWITCH SENSE
8	G15 20VT/TN	KEY-IN IGNITION SWITCH SENSE
9	G80 20VT/YL	FLIP-UP GLASS AJAR SWITCH SENSE
10	G773 20VT/OR	REAR COURTESY LAMP CONTROL
11	W33 20BR/DG	WASHER PUMP DRIVER
12	L91 18WT/DB	HAZARD LAMP CONTROL
13	W13 20BR/LG	REAR WIPER ON DRIVER
14	Z10 16BK/TN	GROUND
15	D25 18WT/VT	PCI BUS
16	-	-
17	P101 20LG/WT	FLIP-UP GLASS RELEASE SWITCH SENSE
18	-	-
19	L18 20WT/LG (LIGHTBAR)	LIGHTBAR SWITCH SENSE
20	B22 20DG/YL	VEHICLE SPEED SIGNAL
21	G69 20VT/WT	VTSS INDICATOR DRIVER
22	G76 20VT/YL	RIGHT REAR DOOR AJAR SWITCH SENSE
23	C215 20LB	REAR WINDOW DEFOGGER CONTROL
24	C221 20LB/OR	A/C ON/OFF CONTROL
25	Z940 16BK	GROUND
26	P100 20DB/LG	FLIP-UP GLASS RELEASE MOTOR DRIVER

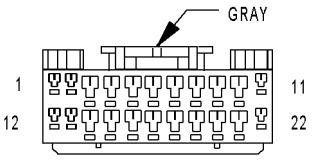

BODY CONTROL MODULE C2

BODY CONTROL MODULE C2 - GRAY 22 WAY

CAV	CIRCUIT	FUNCTION
1	-	-
2	G910 20VT/BR	TAILGATE SWITCH GROUND
3	G77 20VT/GY	LEFT REAR DOOR AJAR SWITCH SENSE
4	L900 20WT/YL	HEADLAMP SWITCH RETURN
5	L307 20PK/RD	HEADLAMP SWITCH MUX
6	-	-
7	L87 20WT/OR (EXCEPT BASE)	FRONT FOG LAMP SWITCH SENSE
8	E3 20OR/YL	PANEL LAMPS DIMMER SWITCH MUX
9	-	-
10	W35 20BR/LG	FRONT WIPER SWITCH MUX
11	X920 20GY/OR (EXCEPT BASE)	RADIO CONTROL MUX RETURN
12	-	-
13	-	-
14	-	-
15	-	-
16	Z950 20BK (RHD)	GROUND
17	G71 20VT/OR (LHD)	TAILGATE CYLINDER LOCK SWITCH MUX
18	-	-
19	L115 20WT/YL	HIGH BEAM SWITCH SENSE
20	F512 20PK/OR	VEHICLE SPEED SENSOR SUPPLY
21	B12 20DG/OR	VEHICLE SPEED SIGNAL
22	X20 20GY/WT (EXCEPT BASE)	RADIO CONTROL MUX

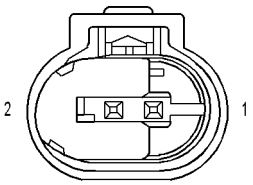

BOOST PRESSURE SOLENOID (DIESEL)

BOOST PRESSURE SOLENOID (DIESEL) - 2 WAY

CAV	CIRCUIT	FUNCTION
1	K347 20BR/PK	FUSED ASD RELAY OUTPUT
2	X635 20BR/WT	BOOST PRESSURE SOLENOID CONTROL

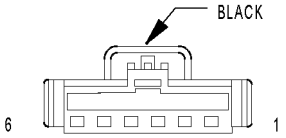

BRAKE LAMP SWITCH

BRAKE LAMP SWITCH - BLACK 6 WAY

CAV	CIRCUIT	FUNCTION
1	A103 18GY/RD	FUSED B(+)
2	L50 18WT/TN (DIESEL)	PRIMARY BRAKE SWITCH SIGNAL
2	L50 18WT/TN (GAS)	BRAKE LAMP SWITCH OUTPUT
3	V30 20VT/WT	S/C BRAKE SWITCH OUTPUT
4	V32 20VT/YL	S/C POWER SUPPLY
5	Z940 20BK	GROUND
6	B15 20DG/WT (DIESEL)	SECONDARY BRAKE SWITCH SIGNAL
6	B15 20DG/WT (GAS)	BRAKE SWITCH NO. 1 SIGNAL

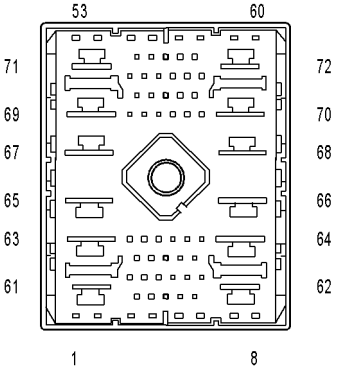

C100 (LHD)

C100 (LHD) - (HEADLAMP AND DASH SIDE)

CAV	CIRCUIT
1	B1 18DG/DB (ABS)
2	B2 18DG/LB (ABS)
3	N4 20DB/YL (GAS)
4	B22 18DG/YL (GAS)
5	K106 20VT/LB (GAS)
6	-
7	T26 20DG/OR (DIESEL M/T)
8	K167 20BR/YL
9	V38 20VT/OR (DIESEL)
10	K29 20WT/BR (DIESEL)
11	K23 20BR/WT (DIESEL)
12	L13 18WT/YL
13	G70 20VT/LB (EXPORT)
14	Z11 20BK/LG
15	K900 20DB/DG
16	T141 20YL/OR (M/T)
17	L62 18WT/OR
18	L63 18WT/DG
19	V30 20VT/WT (SPEED CONTROL)
20	D20 20WT/LG (GAS)
21	V32 20VT/YL (GAS)
22	W1 20BR/TN
23	-
24	K107 20VT/WT (GAS)
25	-
26	D16 20WT/OR (EXCEPT DIESEL M/T)
27	-
28	R80 20VT/LB
29	R82 20WT/LB

C100 (LHD) - (HEADLAMP AND DASH SIDE)

CAV	CIRCUIT
30	R79 20LB/VT
31	R81 20LB/WT
32	D21 20WT/GY (DIESEL A/T)
32	D15 20BR/WT (GAS)
33	-
34	D21 20WT/GY
35	-
36	K304 20BR/DB (DIESEL)
37	B20 20DG/OR
38	Z11 20BK/LG
39	W33 20BR/DG
40	K400 20BR/VT (DIESEL)
41	T6 20DG (A/T)
42	V37 20VT (SPEED CONTROL)
43	W20 20BR/YL
44	B15 20DG/WT
45	D25 20WT/VT
46	K852 20BR/VT (DIESEL)
47	X75 18GY/DG (EXPORT)
48	L10 20WT/GY
49	-
50	D508 20WT/GY (TIRE PRESSURE MONITORING)
51	-
52	K300 20BR (DIESEL)
53	-
54	K854 20VT/BR (DIESEL)
55	F22 20PK/TN (EXCEPT BASE)
56	G18 20OR/VT (DIESEL)
57	A100 14RD/VT
58	K392 18BR/WT (DIESEL)
58	N1 18DG/OR (GAS)
59	L43 18WT/DB
60	A904 14RD
61	A106 12LB/RD
62	-
63	A1 12RD
64	A111 12DG/RD
65	A100 14RD/VT
66	-
67	-
68	-
69	A916 12RD
70	-
71	-
72	-

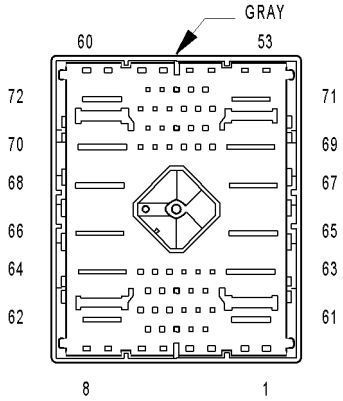

C100 (LHD)

C100 (LHD) - (I/P SIDE)

CAV	CIRCUIT
1	B1 20DG/DB
2	B2 20DG/LB
3	N4 20DB/YL
4	B22 20DG/YL
5	K106 20VT/LB
6	-
7	T26 20DG/OR
8	K167 20BR/YL
9	V38 20VT/OR
10	K29 20WT/BR
11	K23 20BR/WT
12	L13 18WT/YL (EXPORT)
13	G70 20VT/LB (EXCEPT BASE)
14	Z11 20BK/LG
15	K900 20DB/DG
16	T141 20YL/OR
17	L62 18WT/OR
18	L63 18WT/DG
19	V30 20VT/WT
20	D20 20WT/LG
21	V32 20VT/YL
22	W1 20BR/TN
23	F943 20PK/LG
24	K107 20VT/WT
25	-
26	D16 20WT/OR
27	-
28	R80 20VT/LB
29	R82 20WT/LB
30	R79 20LB/VT
31	R81 20LB/WT
32	D15 20DB/WT
33	B12 20DG/OR
34	D21 20WT/GY
35	F512 20PK/OR
36	K304 20BR/DB
37	B20 20DG/OR
38	Z11 20BK/LG
39	W33 20BR/DG
40	K400 20BR/VT
41	T6 20DG
42	V37 20VT
43	W20 20BR/YL
44	B15 20DG/WT
45	D25 20WT/VT
46	K852 20BR/VT
47	X75 18GY/DG
48	L10 20WT/GY
49	-
50	F508 20WT/GY
51	-
52	K300 20BR
53	-
54	K854 20VT/BR

C100 (LHD) - (I/P SIDE)

CAV	CIRCUIT
55	-
56	G18 20PK/BK
57	A100 14RD/VT
58	N1 16DG/OR
59	L43 18VT/DB (EXPORT)
60	A904 14RD (LIGHTBAR)
61	A106 12LB/RD
62	-
63	A1 12RD
64	A111 12DG/RD
65	-
66	-
67	-
68	-
69	A916 12RD
70	-
71	-
72	-

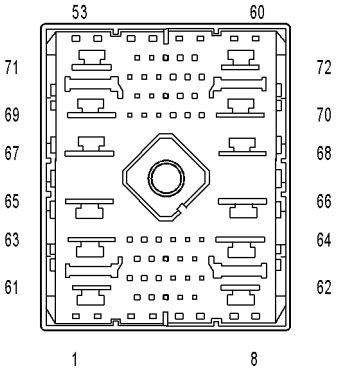

C100 (RHD)

C100 (RHD) - (HEADLAMP AND DASH SIDE)

CAV	CIRCUIT
1	L33 18WT/LG
2	L34 18WT/GY
3	X2 18DG/OR
4	B22 18DG/YL (GAS)
5	C115 20DB
6	W7 16BR/GY
7	T26 20DG/OR (DIESEL M/T)
8	K167 20BR/YL (DIESEL)
9	V38 20VT/OR (DIESEL)
10	K29 20WT/BR (DIESEL)
11	K23 20BR/WT (DIESEL)
12	L13 18WT/YL
13	G70 20VT/LB
14	Z11 20BK/LG
15	K900 20DB/DG
16	T141 20YL/OR (M/T)
17	L62 18WT/OR
18	L63 18WT/DG
19	V30 20VT/WT (GAS)
20	D20 20WT/LG (GAS)
21	V32 20VT/YL (GAS)
22	W1 20BR/TN
23	-
24	W6 20BR/LB
25	
26	D16 20WT/OR (EXCEPT DIESEL M/T)
27	L44 18WT/TN
28	R80 20VT/LB
29	R82 20WT/LB
30	R79 20LB/WT
31	R81 20LB/WT
32	D21 20WT/GY (DIESEL A/T)

C100 (RHD) - (HEADLAMP AND DASH SIDE)

CAV	CIRCUIT
32	D15 20BR/WT (GAS)
33	-
34	D21 20WT/GY
35	-
36	F20 20PK/GY
37	B20 20DG/OR
38	Z11 20BK/LG
39	W33 20BR/DG
40	K400 20BR/VT (DIESEL)
41	T6 20DG (A/T)
42	V37 20VT
43	W20 20BR/YL
44	B153 20DG/WT
45	D25 20WT/VT
46	K852 20BR/VT (DIESEL)
47	X75 18GY/DG
48	L10 20WT/GY
49	F1 20PK/WT
50	W2 20BR/LG
51	L77 18PK/RD
52	L50 18WT/TN
53	L89 16WT/YL
54	K854 20VT/BR (DIESEL)
55	F22 20PK/TN
56	G18 20OR/VT (DIESEL)
57	-
58	A5 16RD/VT
59	L43 18WT/DB
60	A904 14RD
61	A106 12LB/RD
62	A139 12RD/YL
63	A1 12RD
64	A111 12DG/RD
65	A901 10RD
66	A912 10RD
67	A908 20RD
68	A911 10RD
69	A916 12RD
70	A12 10RD/BR
71	A906 12RD
72	-

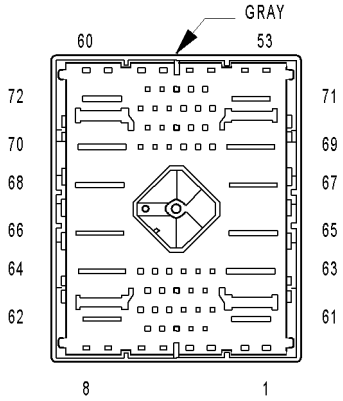

C100 (RHD)

C100 (RHD) - (I/P SIDE)

CAV	CIRCUIT
1	L43 18VT
2	F1 20DB
4	B22 18LG/YL
5	L44 18VT/RD
7	V55 16TN/RD
8	-
9	-
10	D25 18YL/VT/BR
11	V14 18RD/VT
12	L13 18BR/YL
13	G70 20BR/TN
14	G11 20WT/BK
15	K4 20BK/LB
16	L50 18WT/TN
17	L62 18BR/RD
18	L63 18DG/RD
19	V30 18DB/RD
20	D20 20LG
21	V32 18YL/RD
24	F15 18DB/WT
25	G18 20PK/BK
28	R46 20BR/LB
29	R48 20TN
31	R49 20LB
32	D15 20DB
35	F512 18PK/OR
36	-
39	V10 18BR
42	V37 20RD/LG
43	V20 18BK/WT
46	-
47	X75 18DG
50	F22 18DB/PK
53	L78 18DG/YL
54	F20 18WT
57	-
58	L34 18RD/OR
60	A32 14RD/DB
61	A41 12YL
62	A21 12RD/DB
63	A1 12RD
64	A111 12RD/LB
65	A12 10RD/TN
66	A13 10PK/WT
67	A18 10PK
68	A7 10RD/BK
69	A2 12PK/BK
70	A25 12DB
71	A4 12BK/PK
72	A99 14RD/VT

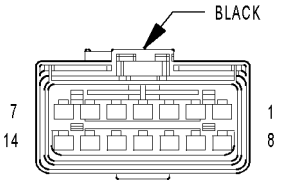

C101 (2.4L)

C101 (2.4L) - BLACK (ENGINE SIDE)

CAV	CIRCUIT
1	-
2	-
3	K61 18YL/BK
4	K961 18BR/VT
5	K21 18BK/RD
6	K2 18TN/BK
7	K1 18DG/RD
8	K22 18OR/DB
9	F856 18YL/PK
10	G60 18GY/YL
11	-
12	F855 18OR/PK
13	-
14	-

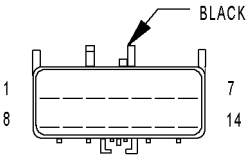

C101 (2.4L)

C101 (2.4L) - BLACK (INJECTOR SIDE)

CAV	CIRCUIT
1	-
2	-
3	K61 18YL/BK
4	K961 18BR
5	K21 18BK/RD
6	K2 18TN/BK
7	K1 18DG/RD
8	K22 18OR/DB
9	F856 18YL/PK
10	G60 18GY/YL
11	-
12	F855 18OR/PK
13	-
14	-

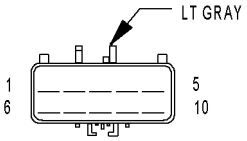

C102 (RHD)

C102 (RHD) - LT GRAY (UNIBODY SIDE)

CAV	CIRCUIT
1	K226 18DB/WT
2	-
3	A141 16DG/WT
4	B1 18YL/DB
5	B2 18YL
6	K4 18BK/LB
7	-
8	K125 18WT/DB
9	K107 18OR
10	K106 18WT/DG

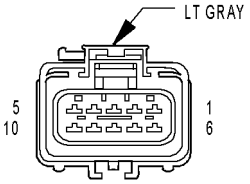

C102 (RHD)

C102 (RHD) - (HEADLAMP AND DASH SIDE)

CAV	CIRCUIT
1	-
2	F512 18PK/OR
3	A141 16DG/WT
4	B1 18YL/DB
5	B2 18YL
6	K4 18BK/LB
7	B12 18DG/OR
8	-
9	K107 18OR
10	K106 18WT/DG

CONNECTOR NOT AVAILABLE

C104 - (INJECTOR SIDE)

CAV	CIRCUIT
1	T515 20YL/DB (A/T)
2	F142 16PK/GY (EXCEPT EXPORT)
2	G18 20OR/VT (EXPORT)
3	C13 20LB/OR (DIESEL)
3	A142 14RD/OR (GAS)
4	T141 20YL/OR (2.5L M/T)
4	T16 16YL/OR (A/T)
5	D25 20 WT/VT (EXCEPT 2.5L)
6	D16 20WT/OR (A/T GAS)
6	B15 20DG/WT (DIESEL)
7	D64 20WT/LB (DIESEL)
8	D65 20WT/LG (DIESEL)
9	L50 18WT/TN (DIESEL)
10	Z131 20BK/DG
11	C115 20DB
12	K900 20DB/DG
13	N201 20DB/LG (DIESEL)
13	C20 20DB/YL (GAS)
14	K132 20DB/LB (DIESEL)
14	C3 18DB/YL (GAS)

CONNECTOR
NOT
AVAILABLE

C104 - (HEADLAMP AND DASH SIDE)

CAV	CIRCUIT
1	T515 20YL/DB
2	G18 20OR/VT (DIESEL)
2	F142 16PK/GY (GAS)
3	C13 20LB/OR (DIESEL)
3	A142 14RD/OR (GAS A/T)
4	T141 20YL/OR (DIESEL M/T)
4	T16 16YL/OR (GAS)
5	D25 20WT/VT
6	B15 20DG/WT (DIESEL)
6	D16 20WT/OR (GAS)
7	D64 20WT/LB (DIESEL)
8	D65 20WT/LG (DIESEL)
9	L50 18WT/TN
10	-
11	C115 20DB
12	K900 20DB/DG
13	N201 20DB/LG (DIESEL)
13	C20 20DB/YL (GAS)
14	K132 20DB/LB (DIESEL)
14	C3 18DB/YL (GAS)

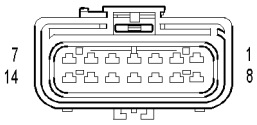

C105
(DIESEL)

C105 (DIESEL) - (ENGINE SIDE)

CAV	CIRCUIT
1	K342 20BR/WT
2	D21 20WT/GY
3	L10 20WT/GY
4	G31 20VT/OR
5	K167 20BR/YL
6	F1 20PK/WT
7	F26 20PK/OR
8	V38 20VT/OR
9	K23 20BR/WT
10	Z11 20BK/LG
11	Z11 20BK/LG
12	T6 20DG (A/T)
13	K347 20BR/PK
14	K302 20BR/WT

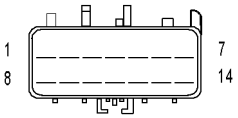

C105 (DIESEL)

C105 (DIESEL) - (HEADLAMP AND DASH SIDE)

CAV	CIRCUIT
1	K342 20BR/WT
2	D21 20WT/GY
3	L10 20WT/GY
4	G31 20VT/OR
5	K167 20BR/YL
6	F1 20PK/WT
7	F26 20PK/OR
8	-
9	V38 20VT/OR
10	Z11 20BK/LG
11	Z11 20BK/LG
12	T6 20DG (A/T)
13	K347 20BR/PK
14	K302 20BR/WT

CONNECTOR NOT AVAILABLE

C105 (GAS) - BLACK (ENGINE SIDE)

CAV	CIRCUIT
1	D20 20WT/LG
2	D21 20WT/GY
3	L10 20WT/GY
4	G31 20VT/OR
5	A209 18RD
6	F1 20PK/WT
7	F26 20PK/OR
8	-
9	B22 20DG/YL
10	Z11 20BK/LG
11	Z11 20BK/LG
12	T6 20DG (A/T)
13	-
14	-

CONNECTOR NOT AVAILABLE

C105 (GAS) - BLACK (HEADLAMP AND DASH SIDE)

CAV	CIRCUIT
1	D20 20WT/LG
2	D21 20WT/GY
3	L10 20WT/GY
4	G31 20VT/OR
5	A209 18RD
6	F1 20PK/WT
7	F26 20PK/OR
8	-
9	B22 18DG/YL
10	Z11 20BK/LG
11	Z11 20BK/LG
12	T6 20DG (A/T)
13	-
14	-

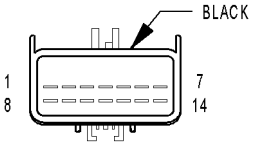

C106

C106 - BLACK (GOR SIDE)

CAV	CIRCUIT
1	Z932 16BK
2	Z931 16BK
3	K900 20DB/DG
4	L77 18PK/RD (HEADLAMP LEVELING)
5	G31 20VT/OR
6	L43 18WT/DB
7	L34 18WT/GY
8	L33 18WT/LG
9	L78 18WT/OR (HEADLAMP LEVELING)
10	L44 18WT/TN
11	L89 16WT/YL
12	L13 18WT/YL
13	-
14	-

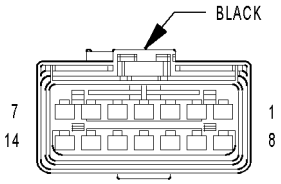

C106

C106 - BLACK (HEADLAMP AND DASH SIDE)

CAV	CIRCUIT
1	Z932 16BK
2	Z931 16BK
3	K900 20DB/DG
4	L77 18PK/RD
5	G31 20VT/OR
6	L43 18WT/DB
7	L34 18WT/GY
8	L33 18WT/LG
9	L78 18WT/OR
10	L44 18WT/TN
11	L89 16WT/YL
12	L13 18WT/YL
13	-
14	-

CONNECTOR NOT AVAILABLE

C107 - (LEFT FRONT FASCIA SIDE)

CAV	CIRCUIT
1	Z931 16BK
2	L63 18WT/DG
3	L77 18PK/RD

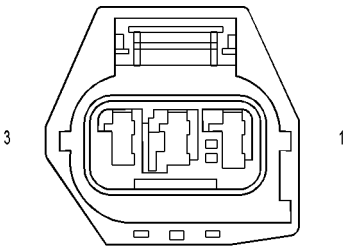

C107

C107 - (HEADLAMP AND DASH SIDE)

CAV	CIRCUIT
1	Z931 16BK
2	L63 18WT/DG
3	L77 18PK/RD

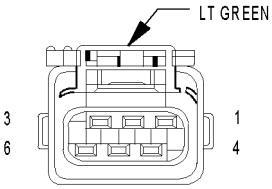

C108
(GAS)

C108 (GAS) - LT GREEN (BATTERY SIDE)

CAV	CIRCUIT
1	K52 18PK/BK
2	K20 18DG
3	Z142 18BK/WT
4	T40 12BR
5	K70 18VT/RD
6	-

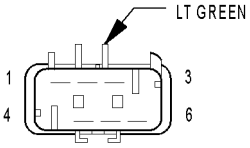

C108
(GAS)

C108 (GAS) - LT GREEN (HEADLAMP AND DASH SIDE)

CAV	CIRCUIT
1	K52 18PK/BK
2	K20 18DG
3	Z142 18BK/WT
4	T40 12BR
5	K70 18VT/RD
6	-

CONNECTOR
NOT
AVAILABLE

C109 - (RIGHT FRONT FASCIA SIDE)

CAV	CIRCUIT
1	Z932 16BK
2	L62 18WT/OR
3	L78 18WT/OR

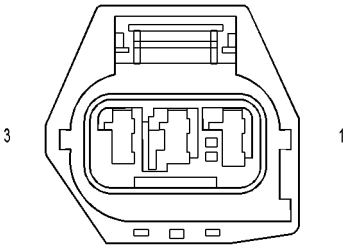

C109

C109 - (HEADLAMP AND DASH SIDE)

CAV	CIRCUIT
1	Z932 16BK
2	L62 18WT/OR
3	L78 18WT/OR

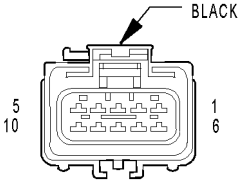

C110
(2.4L M/T)

C110 (2.4L M/T) - BLACK (ENGINE SIDE)

CAV	CIRCUIT
1	F142 18OR/DG
2	C3 18DB/BK
3	Z246 18BK/GY
4	K11 18WT/DB
5	K12 18TN
6	K13 18YL/WT
7	K14 18LB/BR
8	K44 18TN/YL
9	K4 18BK/LB
10	-

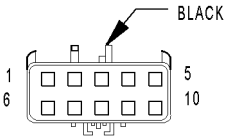

C110
(2.4L)

C110 (2.4L) - BLACK (INJECTOR SIDE)

CAV	CIRCUIT
1	F142 18OR/DG
2	C3 18DB/BK
3	Z246 18BK/GY
4	K11 18WT/DB
5	K12 18TN
6	K13 18YL/WT
7	K14 18LB/BR
8	K44 18TN/YL
9	K4 18BK/LB
10	-

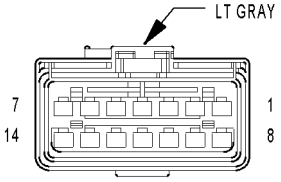

C111 (DIESEL)

C111 (DIESEL) - LT GRAY (ENGINE SIDE)

CAV	CIRCUIT
1	D16 20WT/OR (A/T)
2	V37 20VT
3	Z133 14BK/LG
4	N112 20DB/OR
5	A119 18RD/OR
6	-
7	C20 20DB/YL
8	C3 18DB/YL
9	K852 20BR/VT
10	T752 20DG/OR
11	N117 20DB/WT
12	X635 20BR/WT
13	K391 20BR/YL
14	-

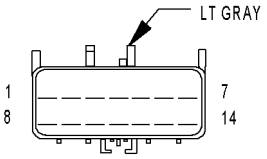

C111 (DIESEL)

C111 (DIESEL) - LT GRAY (HEADLAMP AND DASH SIDE)

CAV	CIRCUIT
1	D16 20WT/OR (A/T)
2	V37 20VT
3	Z133 14BK/LG
4	N112 20DB/OR
5	A119 18RD/OR
6	-
7	C20 20DB/YL
8	C3 18DB/YL
9	K852 20BR/VT
10	T752 20DG/OR
11	N117 20DB/WT
12	X635 20BR/WT
13	K391 20BR/YL
14	-

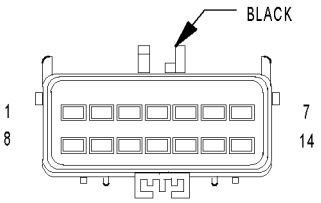

C112

C112 - BLACK (ENGINE SIDE)

CAV	CIRCUIT
1	-
2	K66 20DB/WT (2.4L M/T)
3	-
4	-
5	-
6	K125 16BR/DG
7	K399 18BR/GY (3.7L)
8	K299 18BR/OR
9	D15 20BR/WT (3.7L A/T)
10	-
11	-
12	-
13	-
14	-

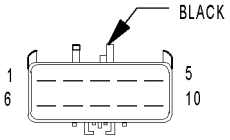

C112

C112 - BLACK (HEADLAMP AND DASH SIDE)

CAV	CIRCUIT
1	-
2	K66 20DB/WT
3	-
4	-
5	-
6	K125 16BR/DG
7	K399 18BR/GY
8	K299 18BR/OR
9	D15 20BR/WT
10	-
11	-
12	-
13	-
14	-

CONNECTOR NOT AVAILABLE

C113 (DIESEL) - (ENGINE SIDE)

CAV	CIRCUIT	FUNCTION
1	A202 14RD/WT	NO FUNCTION DEFINED
2	A203 14RD/BR	NO FUNCTION DEFINED
3	A204 14RD/YL	NO FUNCTION DEFINED
4	A208 14RD/OR	FUSED B(+)

CONNECTOR NOT AVAILABLE

C113 (DIESEL) - (BATTERY SIDE)

CAV	CIRCUIT
1	A202 14RD/WT
2	A203 14RD/BR
3	A204 14RD/YL
4	A208 14RD/OR

CONNECTOR NOT AVAILABLE

C114 - (BATTERY SIDE)

CAV	CIRCUIT
1	K125 16BR/DG
2	K347 20BR/PK
3	D330 20WT/BR
4	K330 20LB/BR
5	-
6	Z133 18BK/LG

CONNECTOR NOT AVAILABLE

C114 - (HEADLAMP AND DASH SIDE)

CAV	CIRCUIT
1	K125 16BR/DG
2	K347 20BR/PK
3	D330 20WT/BR
4	K330 20LB/BR
5	-
6	Z133 14BK/LG

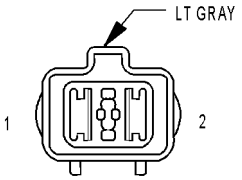

C114 (DIESEL)

C114 (DIESEL) - LT GRAY (BATTERY SIDE)

CAV	CIRCUIT
1	K154 10GY
2	K104 10RD/WT

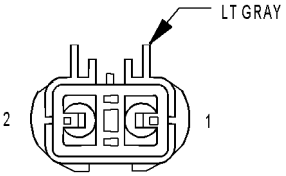

C114 (DIESEL)

C114 (DIESEL) - LT GRAY (GLOW PLUG ASSEMBLY SIDE)

CAV	CIRCUIT
1	F154 10GY
2	K104 10RD/WT

CONNECTOR NOT AVAILABLE

C117 (DIESEL) - (HEADLAMP AND DASH)

CAV	CIRCUIT
1	K303 20BR/OR
2	K300 20BR
3	K310 20BR/DG
4	K330 20LB/BR
5	D330 20WT/BR
6	K301 20BR/LG
7	K345 16BR/RD
8	K305A20BR/LB
9	K854 20VT/BR
10	A903 16RD (A/T)
10	T26 20DG/OR (M/T)
11	A993 16RD
12	K29 20WT/BR
13	T750 12YL/GY
14	K400 20BR/VT

CONNECTOR NOT AVAILABLE

C117 (DIESEL) - (INJECTOR SIDE)

CAV	CIRCUIT
1	K303 20BR/OR
2	K300 20BR
3	K310 20BR/DG
4	K330 20LB/BR
5	D330 20WT/BR
6	K301 20 BR/LG
7	K345 14BR/RD
8	K305 20BR/LB
9	K854 20VT/BR
10	A903 16RD (A/T)
10	T26 20DG/OR (M/T)
11	A993 16RD
12	K29 20WT/BR
13	T750 12YL/GY
14	K400 20BR/VT

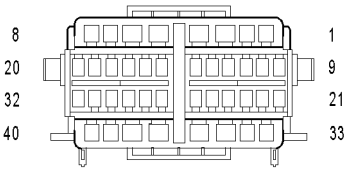

C201

C201 - (INSTRUMENT PANEL SIDE)

CAV	CIRCUIT
1	-
2	F23 18DB/YL
3	X75 18DG
3	-
4	A99 14RD/VT
4	-
5	F14 18LG/YL
6	-
7	V21 20DB/RD
8	V22 20BR/YL
9	-
10	-
11	K226 18DB/WT
11	-
12	G74 20TN/RD
13	G71 18VT/YL
14	T6 20VT/WT
15	G9 20GY/BK
16	B1 18YL/DB
16	-
17	K29 20WT/PK
18	L62 18BR/RD
19	M3 20PK/DB
20	K125 18WT/DB
20	-
21	G76 20TN/YL
22	G77 20TN/OR
23	K4 18BK/LB
23	-
24	G910 20VT/BR
25	G78 20TN/BK
26	P101 20OR/PK
27	G80 20YL/WT
28	B2 18YL

C201 - (INSTRUMENT PANEL SIDE)

CAV	CIRCUIT
28	-
29	Z9 16BK
30	L63 18DG/RD
31	K106 18WT/DG
31	-
32	K107 18OR
32	-
33	D25 18VT/YL
33	D25 18YL/VT
34	G75 20TN
35	-
35	G72 18DG/OR
36	-
36	G73 18LG/OR
37	-
38	-
38	A141 16DG/WT
39	L10 18BR/LG
40	P100 18OR/BR

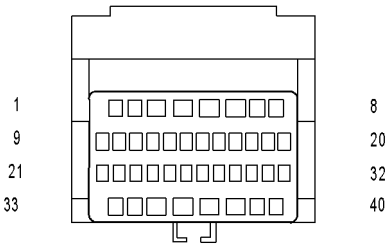

C201

C201 - (UNIBODY SIDE)

CAV	CIRCUIT
1	-
2	F23 18DB/YL
3	X75 18DG
3	-
4	A99 14RD/VT
5	F14 18LG/YL
6	-
7	V21 20DB/RD
8	V22 20BR/YL
9	-
10	-
11	N4 18DB/YL
12	G74 20TN/RD
13	G71 18VT/YL
14	T6 20VT/WT
15	G9 20GY/BK
16	-
16	B1 18YL/DB
17	K29 18WT/PK
18	L62 18BR/RD
19	M3 20PK/DB
20	-
21	G76 20TN/YL
22	G77 20TN/OR
23	K4 18BK/LB
23	-
24	G910 20VT/BR
25	G78 20TN/BK
26	P101 20OR/PK
27	G80 20YL/WT
28	-

C201 - (UNIBODY SIDE)

CAV	CIRCUIT
28	B2 18YL
29	Z9 16BK
30	L63 18DG/RD
31	K106 18WT/DG
31	-
32	-
32	K107 18OR
33	D25 18YL/VT/DB
34	G75 20TN
35	G72 18DG/OR
35	-
36	G73 18LG/OR
36	-
37	-
38	A141 16DG/WT
38	-
39	L10 18BR/LG
40	P100 18OR/BR

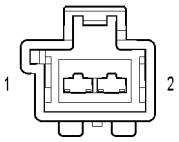

C203
(RENEGADE)

C203 (RENEGADE) - (INSTRUMENT PANEL SIDE)

CAV	CIRCUIT
1	Z144 14BK
2	L8 14WT/TN

CONNECTOR
NOT
AVAILABLE

C203 (RENEGADE) - (LIGHTBAR JUMPER SIDE)

CAV	CIRCUIT
1	Z144 14
2	L8 WT/DG

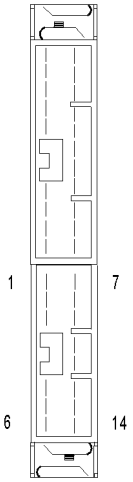

C300 (LHD)

C300 (LHD) - (PASSENGER DOOR SIDE)

CAV	CIRCUIT
1	X58 18GY/OR
2	X296 18LG/GY
3	X208 18GY/DG
4	X13 16LG/GY
5	-
6	-
7	X52 18GY/DB
8	X205 18GY/LG
9	X298 18GY/LG
10	-
11	-
12	-
13	-
14	Z514 16BK/LG

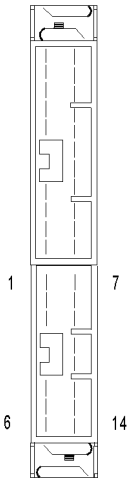

C300 (RHD)

C300 (RHD) - (PASSENGER DOOR SIDE)

CAV	CIRCUIT
1	X57 18DG/OR
2	X295 18GY/DG
3	X299 18GY/YL
4	X13 16LG/GY
5	-
6	-
7	X51 18DG/DB
8	X206 18DG/LG
9	X209 18GY/OR
10	-
11	-
12	-
13	-
14	Z514 16BK/LG

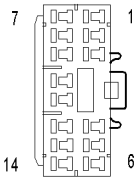

C300 (RHD)

C300 (RHD) - (UNIBODY SIDE)

CAV	CIRCUIT
1	X57 18DG/OR
2	X295 18GY/DG
3	X299 18GY/YL
4	X13 16LG/GY
5	-
6	-
7	X51 18DG/DB
8	X206 18DG/LG
9	X209 18GY/OR
10	-
11	-
12	-
13	-
14	Z514 16BK/LG

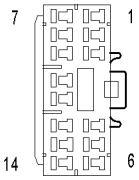

C300 (LHD)

C300 (LHD) - (UNIBODY SIDE)

CAV	CIRCUIT
1	X58 18GY/OR
2	X296 18LG/GY
3	X208 18GY/DG
4	X13 16LG/GY
5	-
6	-
7	X52 18GY/DB
8	X205 18GY/LG
9	X298 18GY/LG
10	-
11	-
12	-
13	-
14	Z514 16BK/LG

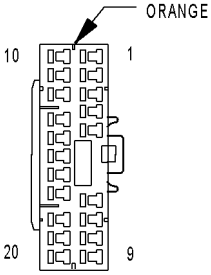

C301 (RHD)

C301 (RHD) - ORANGE (UNIBODY SIDE)

CAV	CIRCUIT
1	Q12 14OR/BR
2	F982 20PK/YL
3	P33 16TN/DB
4	C16 20DB/GY
5	P71 20TN/DG
6	P110 20LG/WT
7	-
8	P37 20LG/TN
9	X56 18GY/BR
10	Q22 14OR/VT
11	F302 20GYPK
12	P34 16TN/LB
13	P75 20TN/LG
14	P76 20TN/LB
15	G74 20VT/WT
16	Z998 20BK
17	-
18	P99 20LG/LB
19	P36 20TN/DB
20	X54 18GY

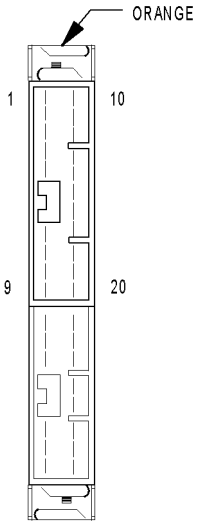

C301 (RHD)

C301 (RHD) - ORANGE (DRIVER DOOR SIDE)

CAV	CIRCUIT
1	Q12 14OR/BR
2	F982 20PK/YL
3	P33 16TN/DB
4	C16 20DB/GY
5	P71 20TN/DG
6	P110 20LG/WT
7	-
8	P37 20LG/TN
9	X56 18GY/BR
10	Q22 14OR/VT
11	F302 20GY/PK
12	P34 16TN/LB
13	P75 20TN/LG
14	P76 20TN/LB
15	G74 20VT/WT
16	Z998 20BK
17	-
18	P99 20LG/LB
19	P36 20TN/DB
20	X54 18GY

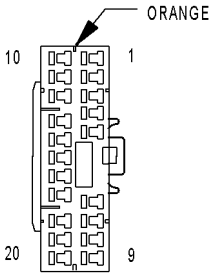

C301 (LHD)

C301 (LHD) - ORANGE (UNIBODY SIDE)

CAV	CIRCUIT
1	Q11 14OR/LG
2	F982 20PK/YL
3	P33 16TN/DB
4	C16 20DB/GY
5	P72 20TN/GY
6	P112 20TN/OR
7	-
8	P37 20LG/TN
9	X55 18DG/BR
10	Q21 14OR/WT
11	F302 20GY/PK
12	P34 16TN/LB
13	P74 20TN/OR
14	P76 20TN/LB
15	G75 20VT
16	Z999 20BK
17	-
18	P114 20TN/WT
19	P36 20TN/DB
20	X53 18DG

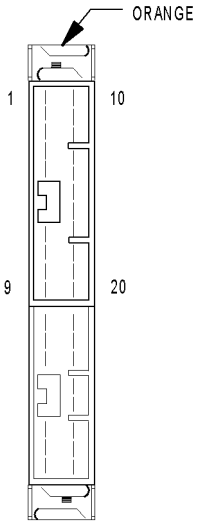

C301 (LHD)

C301 (LHD) - ORANGE (DRIVER DOOR SIDE)

CAV	CIRCUIT
1	Q11 14OR/LG
2	F982 20PK/YL
3	P33 16TN/DB
4	C16 20DB/GY
5	P72 20TN/GY
6	P112 20TN/OR
7	-
8	P37 20LG/TN
9	X55 18DG/BR
10	Q21 14OR/WT
11	F302 20GY/PK
12	P34 16TN/LB
13	P74 20TN/OR
14	P76 20TN/LB
15	G75 20VT
16	Z999 20BK
17	-
18	P114 20TN/WT
19	P36 20TN/DB
20	X53 18DG

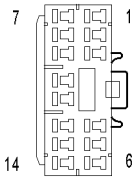

C302 (LHD)

C302 (LHD) - (UNIBODY SIDE)

CAV	CIRCUIT
1	X57 18DG/OR
2	X295 18GY/DG
3	X299 18GY/YL
4	X13 16LG/GY
5	-
6	-
7	X51 18DG/DB
8	X206 18DG/LG
9	X209 18GY/OR
10	-
11	-
12	-
13	-
14	Z514 16BK/LG

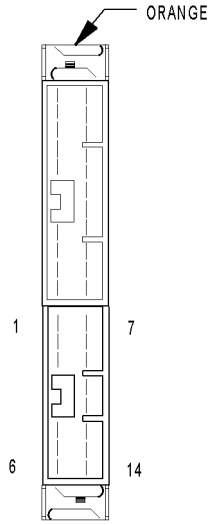

C302
(RHD PREMIUM)

C302 (RHD PREMIUM) - ORANGE (DRIVER DOOR SIDE)

CAV	CIRCUIT
1	X58 18GY/OR
2	X296 18LG/GY
3	X208 18GY/DG
4	X13 16LG/GY
5	-
6	-
7	X52 18GY/DB
8	X205 18GY/LG
9	X298 18GY/LG
10	-
11	-
12	-
13	-
14	Z514 16BK/LG

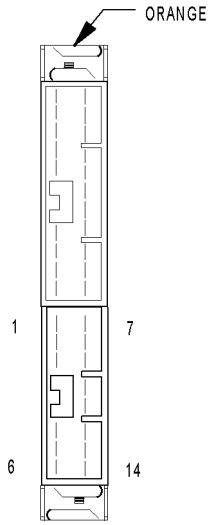

C302
(LHD PREMIUM)

C302 (LHD PREMIUM) - (DRIVER DOOR SIDE)

CAV	CIRCUIT
1	X57 18DG/OR
2	X295 18GY/DG
3	X299 18GY/YL
4	X13 16LG/GY
5	-
6	-
7	X51 18DG/DB
8	X206 18DG/LG
9	X209 18GY/OR
10	-
11	-
12	-
13	-
14	Z514 16BK/LG

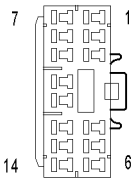

C302 (RHD)

C302 (RHD) - (UNIBODY SIDE)

CAV	CIRCUIT
1	X58 18GY/OR
2	X296 18LG/GY
3	X208 18GY/DG
4	X13 16LG/GY
5	-
6	-
7	X52 18GY/DB
8	X205 18GY/LG
9	X298 18GY/LG
10	-
11	-
12	-
13	-
14	Z514 16BK/LG

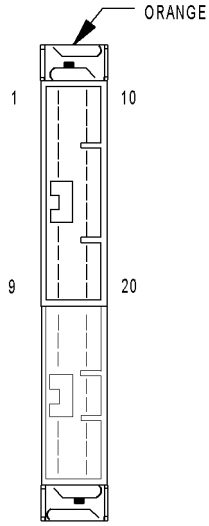

C303 (RHD EXCEPT BASE)

C303 (RHD EXCEPT BASE) - ORANGE (PASSENGER DOOR SIDE)

CAV	CIRCUIT
1	Q11 14OR/LG
2	F982 20PK/YL
3	P33 16TN/DB
4	C16 20DB/GY
5	P71 20TN/DG
6	P110 20LG/WT
7	-
8	P37 20LG/TN
9	X55 18DG/BR
10	Q21 14OR/WT
11	-
12	P35 16TN/YL
13	P75 20TN/LG
14	P76 20TN/LB
15	G75 20VT
16	Z999 20BK
17	-
18	P99 20LG/LB
19	P36 20TN/DB
20	X53 18DG

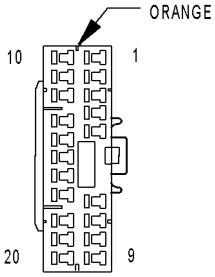

C303 (LHD)

C303 (RHD) - ORANGE (UNIBODY SIDE)

CAV	CIRCUIT
1	Q11 14OR/LG
2	F982 20PK/YL
3	P33 16TN/DB
4	C16 20DB/GY
5	P71 20TN/DG
6	P110 20LG/WT
7	-
8	P37 20LG/TN
9	X55 18DG/BR
10	Q21 14OR/WT
11	-
12	P35 16TN/YL
13	P75 20TN/LG
14	P76 20TN/LB
15	G75 20VT
16	Z999 20BK
17	-
18	P99 20LG/LB
19	P36 20TN/DB
20	X53 18DG

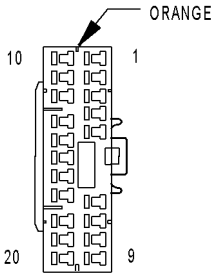

C303 (RHD)

C303 (LHD) - ORANGE (UNIBODY SIDE)

CAV	CIRCUIT
1	Q12 14OR/BR
2	F982 20PK/YL
3	P33 16TN/DB
4	C16 20DB/GY
5	P72 20TN/GY
6	-
7	-
8	P37 20LG/TN
9	X56 18GY/BR
10	Q22 14OR/VT
11	-
12	P35 16TN/YL
13	P74 20TN/OR
14	P76 20TN/LB
15	G74 20VT/WT
16	Z998 20BK
17	-
18	-
19	P36 20TN/DB
20	X54 18GY

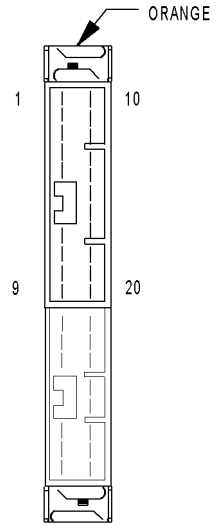

C303 (LHD EXCEPT BASE)

C303 (LHD EXCEPT BASE) - ORANGE (PASSENGER DOOR SIDE)

CAV	CIRCUIT
1	Q12 14OR/BR
2	F982 20PK/YL
3	P33 16TN/DB
4	C16 20DB/GY
5	P72 20TN/GY
6	-
7	-
8	P37 20LG/TN
9	X56 18GY/BR
10	Q22 14OR/VT
11	-
12	P35 16TN/YL
13	P74 20TN/OR
14	P76 20TN/LB
15	G74 20VT/WT
16	Z998 20BK
17	-
18	-
19	P36 20TN/DB
20	X54 18GY

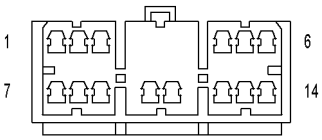

C304

C304 - (UNIBODY SIDE)

CAV	CIRCUIT
1	Q14 14GY (POWER WINDOWS)
2	P33 18OR/BK (POWER LOCKS)
3	-
4	-
5	-
6	X58 18DB/OR (BASE AUDIO)
6	X92 18TN/BK (PREMIUM AUDIO)
7	Q24 14DG (POWER WINDOWS)
8	P35 18OR/VT (POWER LOCKS)
9	-
10	Z351 20BK/LG
10	Z351 18BK/LG
11	-
12	G76 20TN/YL
13	-
14	X52 18DB/WT (BASE AUDIO)
14	X94 18TN/VT (PREMIUM AUDIO)

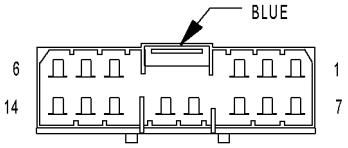

C304

C304 - BLUE (REAR DOOR SIDE)

CAV	CIRCUIT
1	Q14 16GY (POWER WINDOWS)
2	P33 18OR/BK (POWER LOCKS)
3	-
4	-
5	-
6	X58 18DB/OR (BASE AUDIO)
6	X92 18TN/BK (PREMIUM AUDIO)
7	Q24 16DG (POWER WINDOWS)
8	P35 18OR/VT (POWER LOCKS)
9	-
10	Z351 20BK/LG
11	-
12	G76 20TN/YL
13	-
14	X52 18DB/WT (BASE AUDIO)
14	X94 18TN/VT (PREMIUM AUDIO)

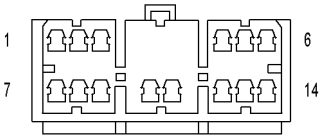

C305

C305 - (UNIBODY SIDE)

CAV	CIRCUIT
1	Q13 14DB (EXCEPT LOWLINE)
2	P33 18OR/BK (POWER LOCKS)
3	-
4	-
5	-
6	X91 18WT/BK (EXCEPT LOWLINE)
6	X57 18BR/LB (LOWLINE)
7	Q23 14RD/WT (EXCEPT LOWLINE)
8	P35 18OR/VT (POWER LOCKS)
9	-
10	Z350 20BK/LG
11	-
12	G77 20TN/OR
13	-
14	X51 18BR/YL (EXCEPT PREMIUM AUDIO)
14	X93 18WT/RD (PREMIUM AUDIO)

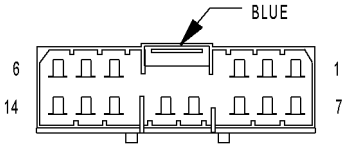

C305

C305 - BLUE (LEFT REAR DOOR SIDE)

CAV	CIRCUIT
1	Q13 16GY (MIDLINE/HIGHLINE)
2	P33 18OR/BK (EXCEPT BASE)
3	-
4	-
5	-
6	X57 18DB/OR (BASE)
6	X91 18TN/BK (PREMIUM)
7	Q23 16DG (MIDLINE/HIGHLINE)
8	P35 18OR/VT (EXCEPT BASE)
9	-
10	Z350 20BK/LG
11	-
12	G74 20TN/WT
13	-
14	X51 18DB/WT (BASE)
14	X93 18TN/VT (PREMIUM)

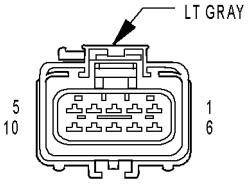

C307

C307 - LT GRAY (UNIBODY SIDE)

CAV	CIRCUIT
2	-
3	A141 16DG/WT (GAS)
4	B1 18YL/DB
5	B2 18YL
6	K4 18BK/LB
7	-
8	Z211 16BK (GAS)
9	K107 18OR (GAS)
10	K106 18WT/DG (GAS)

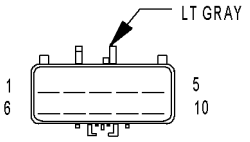

C307

C307 - LT GRAY (FUEL TANK SIDE)

CAV	CIRCUIT
1	K226 18DB/WT
2	-
3	A141 16DG/WT
4	B1 18YL/DB
5	B2 18YL
6	K4 18BK/LB
7	-
8	K125 18WT/DB
8	-
9	K107 18OR
10	K106 18WT/DG

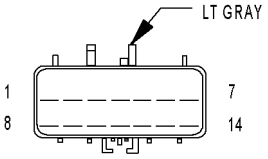

C308

C308 - LT GRAY (UNIBODY SIDE)

CAV	CIRCUIT
1	F85 16VT/WT (EXCEPT BASE)
2	L10 18BR/LG
3	M1 20PK
4	M3 20PK/DB
5	Z111 16BK (EXCEPT BASE)
6	P112 18YL/LB (LHD)
7	X75 18DG (EXCEPT BASE)
7	F89 18OR/RD (TRAILER TOW EXCEPT BASE)
8	F87 20WT/BK (EXCEPT BASE)
10	M20 20BR (EXCEPT BASE)
11	M2 18YL
12	Z2 18BK/LG (EXCEPT BASE)
13	P114 18YL/RD (LHD)
14	D25 18YL/VT (EXCEPT BASE)

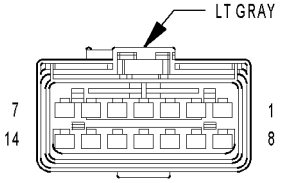

C308

C308 - LT GRAY (OVERHEAD SIDE)

CAV	CIRCUIT
1	F85 16VT/WT
2	L10 20BR/LG
3	M1 20PK
4	M3 20PK/DB
5	-
5	Z111 20
6	P112 20TN/OR
7	-
7	X75 20DG
8	F87 20WT/BK
9	-
10	M20 20BR
11	M2 20YL
12	Z2 20BK/LG
13	P114 20YL/BK
14	D25 20VT/YL

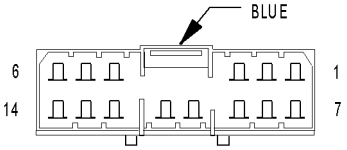

C309

C309 - (UNIBODY SIDE)

CAV	CIRCUIT
1	V21 20DB/RD
2	P31 16PK/WT
3	F70 18PK/BK
4	P100 18OR/BR
5	P101 20OR/PK
6	G71 18VT/YL
7	V22 20BR/YL
8	P30 16OR/WT
9	L77 18BK/YL
10	-
11	G80 20YL/WT
12	Z235 16BK
13	G78 20TN/BK
14	G910 20VT/BR

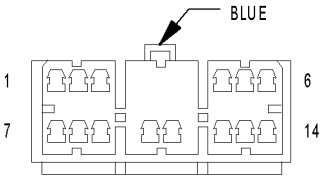

C309

C309 - (SPLITGATE SIDE)

CAV	CIRCUIT
1	V21 20DB/RD
2	P31 16PK/WT
3	F70 18PK/BK
4	P100 18OR/BR
5	P101 20OR/PK
6	G71 18VT/YL (EXCEPT KEYLESS ENTRY)
7	V22 20BR/YL
8	P30 16OR/WT
9	L77 18BR/YL
10	-
11	G80 20VT/YL
12	Z235 16BK
13	G78 20TN/BK
14	G910 20VT/BR

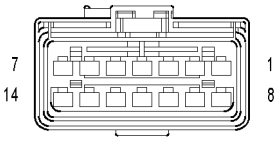

C310

C310 - (UNIBODY SIDE)

CAV	CIRCUIT
1	A6 16RD/BK (EXCEPT BASE)
2	L10 18BR/LG
3	L77 18BK/YL
4	L63 18DG/RD
5	L38 18BR/WT (EXCEPT BASE)
6	L50 18WT/TN
7	A99 14RD/VT (EXCEPT BASE)
8	V23 20BR/WT (EXCEPT BASE)
9	Z151 16BK/WT
10	Z151 16BK/WT
11	L78 18DG/YL
12	L62 18BR/RD
13	-
14	B40 14LB (TRAILER TOW)

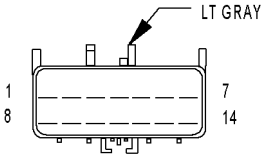

C310

C310 - LT GRAY (REAR LIGHTING SIDE)

CAV	CIRCUIT
1	-
2	L10 18BR/LG
3	L77 18BR/YL
4	L63 18DG/RD
5	L38 18BR/WT (EXPORT)
6	L50 18WT/TN
7	-
8	-
9	Z151 18BK/WT
10	Z151 18BK/WT
11	L78 18DG/YL
12	L62 18BR/RD
13	-
14	-

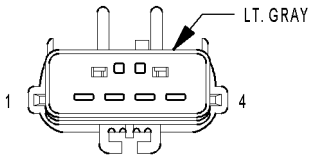

C311

C311 - LT GRAY (DRIVER SEAT SIDE)

CAV	CIRCUIT
1	R57 18LG/GY
1	R57 18DG (HEATED SEATS)
2	R59 18LB
2	F37 18PK/LB (HEATED SEATS)
3	R59 18LG/TN (HEATED SEATS)
4	Z238 18 (HEATED SEATS)

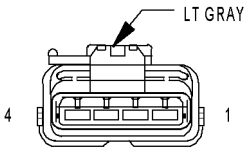

C311

C311 - LT GRAY (UNIBODY SIDE)

CAV	CIRCUIT
1	-
1	R57 18DG
2	F37 14RD/LB
3	R59 18LB
4	Z238 14BK/WT
4	Z238 12BK/WT

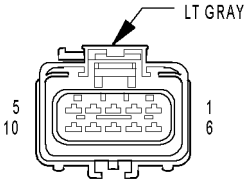

C312 (HIGHLINE)

C312 - LT GRAY (UNIBODY SIDE)

CAV	CIRCUIT
1	-
2	P86 20PK/BK
3	F98 14RD/WT
4	V23 20BR/PK
5	-
6	P142 20TN/DB
7	P134 20TN/LG
8	P138 20VT/LG
9	P140 20VT/BK
10	-

CONNECTOR NOT AVAILABLE

C312 - LT GRAY (SEAT SIDE)

CAV	CIRCUIT
1	F37 20RD/LB (EXCEPT HEATED SEATS)
2	P86 18PK/BK (HEATED SEATS)
3	F98 14RD/WT (HEATED SEATS)
4	V23 20BR/PK (HEATED SEATS)
5	A3 14RD/WT (HEATED SEATS)
6	P142 20TN/DB (HEATED SEATS)
7	P134 20TN/LG (HEATED SEATS)
8	P138 20VT/LG (HEATED SEATS)
9	P140 20VT/BK (HEATED SEATS)
10	Z238 18 (EXCEPT HEATED SEATS)

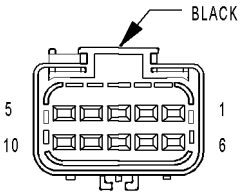

C313

C313 - BLACK (UNIBODY SIDE)

CAV	CIRCUIT
1	D25 20WT/VT
2	R57 20LG/GY (RHD)
3	Z105 20BK (LHD)
4	R59 20LG/TN (RHD)
5	F37 14PK/LB (HEATED SEATS)
6	F201 20PK/OR
7	-
8	Z849 16BK/OR (HEATED SEATS)
9	-
10	-

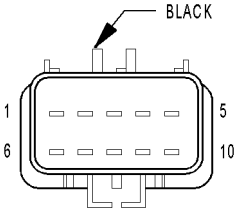

C313

C313 - BLACK (RIGHT SEAT SIDE)

CAV	CIRCUIT
1	D25 18WT/VT
2	R57 18LG/GY
3	Z105 18BK/LG
4	R59 18LG/TN
5	F37 18PK/LB
6	F201 18LG/YL
7	-
8	Z849 14BK/WT
9	-
10	-

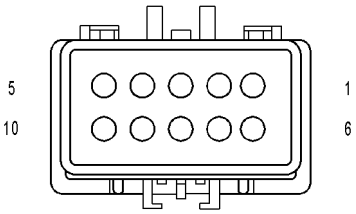

C314
(HEATED SEATS)

C314 (HEATED SEATS) - (SEAT SIDE)

CAV	CIRCUIT
1	-
2	P86 18LG/GY
3	F98 18PK/YL
4	F302 20BR/PK
5	-
6	P142 20LG/TN
7	P134 20LG/OR
8	P82 20VT/LG
9	P84 20VT/BK
10	-

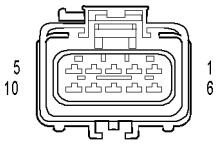

C314

C314 - (UNIBODY SIDE)

CAV	CIRCUIT
1	-
2	P86 20LG/GY
3	F98 16PK/YL
4	F302 20GY/PK
5	-
6	P142 20LG/TN
7	P134 20TN/LB
8	P82 20TN/LB
9	P84 20TN/WT
10	-

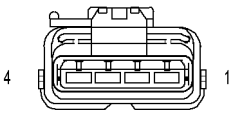

C315
(LHD MIDLINE/HIGHLINE)

C315 (LHD MIDLINE/HIGHLINE) - (UNIBODY SIDE)

CAV	CIRCUIT	FUNCTION
1	Q12 14OR/BR	RIGHT FRONT WINDOW DRIVER UP
2	Q22 14OR/WT	RIGHT FRONT WINDOW DRIVER DOWN
3	Q112 14OR/BR	RIGHT REAR WINDOW DRIVER UP
4	Q212 14OR/VT	RIGHT REAR WINDOW DRIVER DOWN

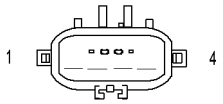

C315
(LHD MIDLINE/HIGHLINE)

C315 (LHD MIDLINE/HIGHLINE) - (UNIBODY SIDE)

CAV	CIRCUIT	FUNCTION
1	Q12 14OR/BR	RIGHT FRONT WINDOW DRIVER UP
2	Q22 14OR/WT	RIGHT FRONT WINDOW DRIVER DOWN
3	Q112 14OR/BR	RIGHT REAR WINDOW DRIVER UP
4	Q212 14OR/VT	RIGHT REAR WINDOW DRIVER DOWN

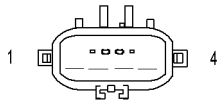

C315
(RHD MIDLINE/HIGHLINE)

C315 (RHD MIDLINE/HIGHLINE) - (UNIBODY SIDE)

CAV	CIRCUIT	FUNCTION
1	Q11 14OR/LG	LEFT FRONT WINDOW DRIVER UP
2	Q21 14OR/WT	LEFT FRONT WINDOW DRIVER DOWN
3	Q111 14TN/YL	LEFT REAR WINDOW DRIVER UP
4	Q211 14TN/LB	LEFT REAR WINDOW DRIVER DOWN

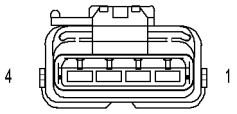

C315
(RHD MIDLINE/HIGHLINE)

C315 (RHD MIDLINE/HIGHLINE) - (UNIBODY SIDE)

CAV	CIRCUIT	FUNCTION
1	Q11 14OR/LG	LEFT FRONT WINDOW DRIVER UP
2	Q21 14OR/WT	LEFT FRONT WINDOW DRIVER DOWN
3	Q111 14TN/YL	LEFT REAR WINDOW DRIVER UP
4	Q211 14TN/LB	LEFT REAR WINDOW DRIVER DOWN

CONNECTOR NOT AVAILABLE

C316 (EXPORT) - (ANTENNA SIDE)

CAV	CIRCUIT
1	X30 10BK
2	X31 10BK

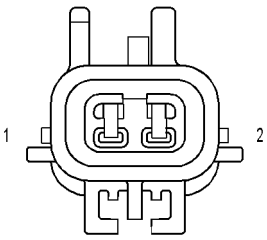

C318

C318 - (LIGHT BAR SIDE)

CAV	CIRCUIT
1	Z144 10
2	L8 10WT/LT

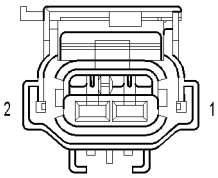

C318

C318 - (LIGHTBAR JUMPER SIDE)

CAV	CIRCUIT
1	Z144 14
2	L8 WT/DG

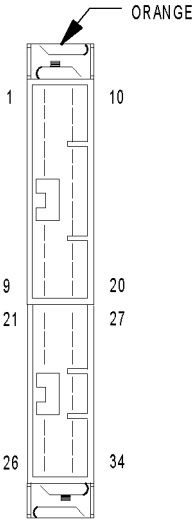

C320
(LHD)

C320 (LHD) - ORANGE (DRIVER DOOR SIDE)

CAV	CIRCUIT
1	Q11 14OR/LG
2	F982 20PK/YL
3	P33 16TN/DB
4	C16 20DB/GY
5	P72 20TN/GY
6	P112 20TN/OR
7	-
8	P37 20LG/TN
9	X55 18DG/BR
10	Q21 14OR/WT
11	F302 20GY/PK
12	P34 16TN/LB
13	P74 20TN/OR
14	P76 20TN/LB
15	G75 20VT
16	Z999 20BK
17	-
18	P114 20TN/WT
19	P36 20TN/DB
20	X53 18DG
21	X57 18DG/OR (PREMIUM)
22	X295 18GY/DG (PREMIUM)
23	X299 18GY/YL (PREMIUM)
24	X13 16LG/GY (PREMIUM)
25	-
26	-
27	X51 18DG/DB (PREMIUM)
28	X206 18DG/LG (PREMIUM)
29	X209 18GY/OR (PREMIUM)
30	-
31	-
32	-
33	-
34	Z514 16BK/LG (PREMIUM)

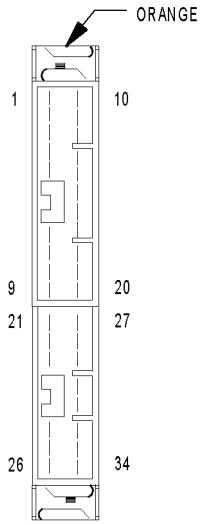

C320 (RHD)

C320 (RHD) - ORANGE (DRIVER DOOR SIDE)

CAV	CIRCUIT
1	Q12 14OR/BR
2	F982 20PK/YL
3	P33 16TN/DB
4	C16 20DB/GY
5	P71 20TN/DG
6	P110 20LG/WT
7	-
8	P37 20LG/TN
9	X56 18GY/BR
10	Q22 14OR/VT
11	F302 20GY/PK
12	P34 16TN/LB
13	P75 20TN/LG
14	P76 20TN/LB
15	G74 20VT/WT
16	Z998 20BK
17	-
18	P99 20LG/LB
19	P36 20TN/DB
20	X54 18GY
21	X58 18GY/OR (PREMIUM)
22	X296 18LG/GY (PREMIUM)
23	X208 18GY/DG (PREMIUM)
24	X13 16LG/GY (PREMIUM)
25	-
26	-
27	X52 18GY/DB (PREMIUM)
28	X205 18GY/LG (PREMIUM)
29	X298 18GY/LG (PREMIUM)
30	-
31	-
32	-
33	-
34	Z514 16BK/LG (PREMIUM)

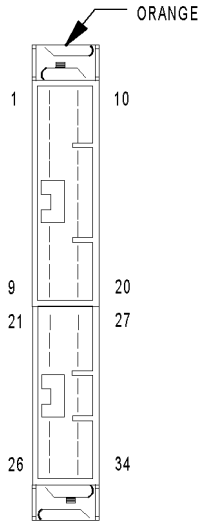

C321 (LHD EXCEPT BASE)

C321 (LHD EXCEPT BASE) - ORANGE (PASSENGER DOOR SIDE)

CAV	CIRCUIT
1	Q12 14OR/BR
2	F982 20PK/YL
3	P33 16TN/DB
4	C16 20DB/GY
5	P72 20TN/GY
6	-
7	-
8	P37 20LG/TN
9	X56 18GY/BR
10	Q22 14OR/VT
11	-
12	P35 16TN/YL
13	P74 20TN/OR
14	P76 20TN/LB
15	G74 20VT/WT
16	Z998 20BK
17	-
18	-
19	P36 20TN/DB
20	X54 18GY
21	X58 18GY/OR (PREMIUM)
22	X296 18LG/GY (PREMIUM)
23	X208 18GY/DG (PREMIUM)
24	X13 16LG/GY (PREMIUM)
25	-
26	-
27	X52 18GY/DB (PREMIUM)
28	X205 18GY/LG (PREMIUM)
29	X298 18GY/LG (PREMIUM)
30	-
31	-
32	-
33	-
34	Z514 16BK/LG (PREMIUM)

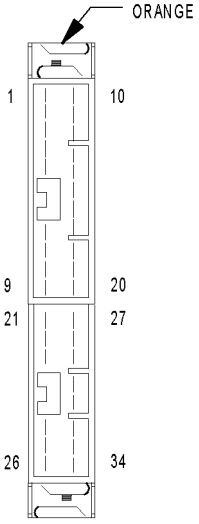

C321 (RHD)

C321 (RHD) - ORANGE (PASSENGER DOOR SIDE)

CAV	CIRCUIT
1	Q11 14OR/LG
2	F982 20PK/YL
3	P33 16TN/DB
4	C16 20DB/GY
5	P71 20TN/DG
6	P110 20LG/WT
7	-
8	P37 20LG/TN
9	X55 18DG/BR
10	Q21 14OR/WT
11	-
12	P35 16TN/YL
13	P75 20TN/LG
14	P76 20TN/LB
15	G75 20VT
16	Z999 20BK
17	-
18	P99 20LG/LB
19	P36 20TN/DB
20	X53 18DG
21	X57 18DG/OR (PREMIUM)
22	X295 18GY/DG (PREMIUM)
23	X299 18GY/YL (PREMIUM)
24	X13 16LG/GY
25	-
26	-
27	X51 18DG/DB (PREMIUM)
28	X206 18DG/LG (PREMIUM)
29	X209 18GY/OR
30	-
31	-
32	-
33	-
34	Z514 16BK/LG (PREMIUM)

CONNECTOR NOT AVAILABLE

C328 - (OVERHEAD SIDE)

CAV	CIRCUIT
1	L50 18WT/TN
2	C15 12RD
3	-
4	Z255 12RD
5	-
6	-

CONNECTOR NOT AVAILABLE

C328 - (UNIBODY SIDE)

CAV	CIRCUIT
1	L50C 18 WT/TN
2	C15 12 DB/WT
3	-
4	Z255 12 BK/WT
5	-
6	-

CONNECTOR NOT AVAILABLE

C330 - (UNIBODY SIDE)

CAV	CIRCUIT
1	D508 20WT/GY (TPM)
2	F22 20PK/TN (TPM)
3	Z912 18BK
4	-

CONNECTOR NOT AVAILABLE

C330 - (REAR FASCIA SIDE)

CAV	CIRCUIT
1	D508 20WT/GY
2	F22 20PK/TN
3	Z912 18BK
4	-

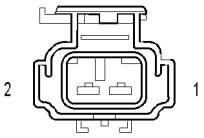

CABIN HEATER (DIESEL)

CABIN HEATER (DIESEL) - 2 WAY

CAV	CIRCUIT	FUNCTION
1	A119 18RD/OR	CABIN HEATER RELAY OUTPUT
2	Z966 18BK	GROUND

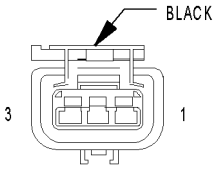

CAMSHAFT POSITION SENSOR (2.4L)

CAMSHAFT POSITION SENSOR (2.4L) - BLACK 3 WAY

CAV	CIRCUIT	FUNCTION
1	F856 20YL/PK	5 VOLT SUPPLY
2	K900 20DB/DG	SENSOR GROUND
3	K44 20TN/YL	CMP SIGNAL

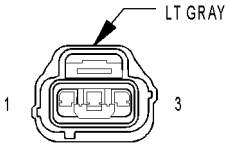

CAMSHAFT POSITION SENSOR (3.7L)

CAMSHAFT POSITION SENSOR (3.7L) - LT GRAY 3 WAY

CAV	CIRCUIT	FUNCTION
1	K44 20DB/GY	CMP SIGNAL
2	K900 20DB/DG	SENSOR GROUND
3	F856 20YL/PK	5 VOLT SUPPLY

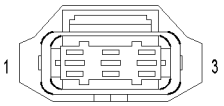

CAMSHAFT POSITION SENSOR (DIESEL)

CAMSHAFT POSITION SENSOR (DIESEL) - 3 WAY

CAV	CIRCUIT	FUNCTION
1	K944 20BR/GY	CAMSHAFT POSITION SENSOR GROUND
2	K44 20DB/GY	CAMSHAFT POSITION SENSOR SIGNAL
3	F856 20YL/PK	CAMSHAFT POSITION SENSOR 5 VOLT SUPPLY

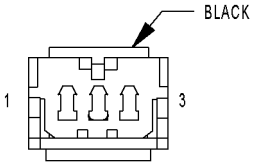

CARGO LAMP (EXCEPT BASE)

CARGO LAMP (EXCEPT BASE) - BLACK 3 WAY

CAV	CIRCUIT	FUNCTION
1	A908 18RD	FUSED B(+)
2	G773 20RD	REAR COURTESY LAMP CONTROL
3	Z327 20BK/WT	GROUND

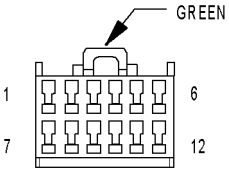

CD CHANGER

CD CHANGER - GREEN 12 WAY

CAV	CIRCUIT	FUNCTION
1	X41 20DG/WT	AUDIO MUX LEFT
2	-	
3	-	
4	Z515 20BK	GROUND
5	X112 20LG/GY	IGNITION RUN/ACC SIGNAL
6	X160 20GY/YL	FUSED B(+)
7	X40 20GY/WT	AUDIO MUX RIGHT
8	X140 20GY/OR	SHIELD
9	-	
10	-	
11	X235 20GY	AUDIO RETURN
12	D25 20WT/VT	PCI BUS

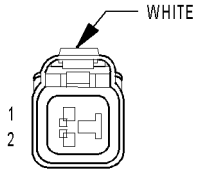

CENTER HIGH MOUNTED STOP LAMP

CENTER HIGH MOUNTED STOP LAMP - WHITE 2 WAY

CAV	CIRCUIT	FUNCTION
A1	L50 18WT/TN	BRAKE LAMP SWITCH OUTPUT
A2	Z255 18RD	GROUND

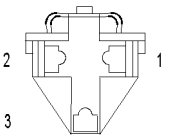

CIGAR LIGHTER

CIGAR LIGHTER - 3 WAY

CAV	CIRCUIT	FUNCTION
1	A207 16RD/LG (LHD)	FUSED B(+)
1	F307 16LB/PK (RHD)	FUSED IGNITION SWITCH OUTPUT (RUN-ACC)
2	-	-
3	Z940 16BK	GROUND

CONNECTOR NOT AVAILABLE

CIRCUIT BREAKERS (JB)

CB NO.	AMPS	FUSED CIRCUIT	FUNCTION
1	20A	A5 16RD/VT	FUSED B(+)
3	10A	F37 14PK/LB	FUSED B(+)

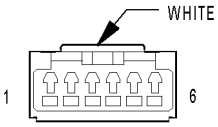

CLOCKSPRING C1

CLOCKSPRING C1 - WHITE 6 WAY

CAV	CIRCUIT	FUNCTION
1	V38 20VT/OR (DIESEL)	S/C SWITCH SIGNAL NO. 2
2	X3 20DG/VT	HORN RELAY CONTROL
3	X20 20GY/WT (EXCEPT BASE)	RADIO CONTROL MUX
4	X920 20GY/OR (EXCEPT BASE)	RADIO CONTROL MUX RETURN
5	K900 20DB/DG	SENSOR GROUND
6	V37 20VT	S/C SWITCH SIGNAL NO. 1

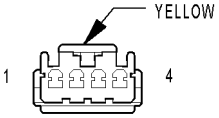

CLOCKSPRING C2

CLOCKSPRING C2 - YELLOW 4 WAY

CAV	CIRCUIT	FUNCTION
1	R43 20LG/BR	DRIVER SQUIB 1 LINE 1
2	R45 20LG/OR	DRIVER SQUIB 1 LINE 2
3	R61 20LG/VT	DRIVER SQUIB 2 LINE 1
4	R63 20LG/WT	DRIVER SQUIB 2 LINE 2

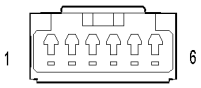

CLOCKSPRING C3

CLOCKSPRING C3 - 6 WAY

CAV	CIRCUIT	FUNCTION
1	V38 20VT/OR (DIESEL)	S/C SWITCH SIGNAL NO. 2
2	X3 20DG/VT	HORN RELAY CONTROL
3	X20 20GY/WT (HIGHLINE)	RADIO CONTROL MUX
4	X920 20GY/OR (HIGHLINE)	RADIO CONTROL MUX RETURN
5	K900 20DB/DG (MIDLINE/HIGHLINE)	SENSOR GROUND
6	V37 20VT (MIDLINE/HIGHLINE)	S/C SWITCH SIGNAL NO. 1

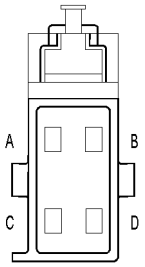

CLUTCH INTERLOCK/UPSTOP SWITCH (M/T)

CLUTCH INTERLOCK/UPSTOP SWITCH (M/T) - 4 WAY

CAV	CIRCUIT	FUNCTION
1	T141 20YL/OR	CLUTCH INTERLOCK SWITCH SIGNAL
2	Z945 18BK	GROUND
3	T26 20DG/OR	CLUTCH UPSTOP SWITCH SIGNAL
4	Z945 18BK	GROUND

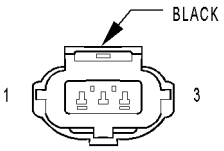

COIL ON PLUG NO. 1 (3.7L)

COIL ON PLUG NO. 1 (3.7L) - BLACK 3 WAY

CAV	CIRCUIT	FUNCTION
1	K86 16YL/DB	COIL CONTROL NO. 1
2	A142 14RD/OR	ASD RELAY OUTPUT
3	-	-

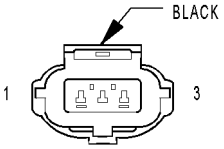

COIL ON PLUG NO. 2 (3.7L)

COIL ON PLUG NO. 2 (3.7L) - BLACK 3 WAY

CAV	CIRCUIT	FUNCTION
1	K85 16DB/YL	COIL CONTROL NO. 2
2	A142 14RD/OR	ASD RELAY OUTPUT
3	-	-

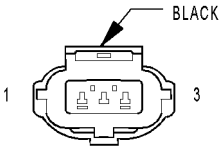

COIL ON PLUG NO. 3 (3.7L)

COIL ON PLUG NO. 3 (3.7L) - BLACK 3 WAY

CAV	CIRCUIT	FUNCTION
1	K93 16DB	COIL CONTROL NO. 3
2	A142 14RD/OR	ASD RELAY OUTPUT
3	-	-

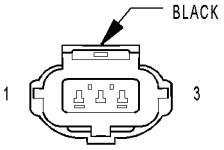

COIL ON PLUG NO. 4 (3.7L)

COIL ON PLUG NO. 4 (3.7L) - BLACK 3 WAY

CAV	CIRCUIT	FUNCTION
1	K15 16DB	COIL CONTROL NO. 4
2	A142 14RD/OR	ASD RELAY OUTPUT
3	-	-

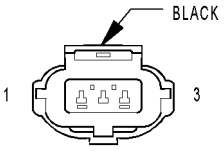

COIL ON PLUG NO. 5 (3.7L)

COIL ON PLUG NO. 5 (3.7L) - BLACK 3 WAY

CAV	CIRCUIT	FUNCTION
1	K16 16DB/YL	COIL CONTROL NO. 5
2	A142 14RD/OR	ASD RELAY OUTPUT
3	-	-

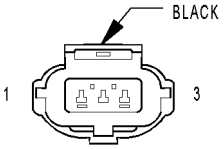

COIL ON PLUG NO. 5 (3.7L)

COIL ON PLUG NO. 6 (3.7L) - BLACK 3 WAY

CAV	CIRCUIT	FUNCTION
1	K10 16DB/OR	COIL CONTROL NO. 6
2	A142 14RD/OR	ASD RELAY OUTPUT
3	-	-

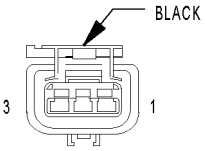

COIL RAIL (2.4L)

COIL RAIL (2.4L) - 3 WAY

CAV	CIRCUIT	FUNCTION
1	K85 16DB/YL	COIL CONTROL NO. 2
2	A142 14RD/OR	ASD RELAY OUTPUT
3	K86 16YL/DB	COIL CONTROL NO. 1

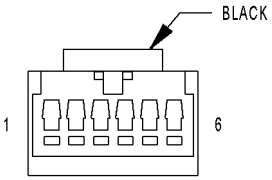

COMPASS MINI-TRIP COMPUTER (PREMIUM)

COMPASS MINI-TRIP COMPUTER (PREMIUM) - BLACK 6 WAY

CAV	CIRCUIT	FUNCTION
1	-	-
2	D25 20WT/VT	PCI BUS
3	A908 18RD	FUSED B(+)
4	Z13 20BK/WT	GROUND
5	F942 20PK/LG	FUSED IGNITION SWITCH OUTPUT (RUN-START)
6	-	-

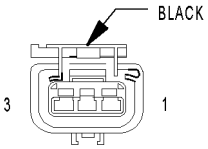

CRANKSHAFT POSITION SENSOR (2.4L)

CRANKSHAFT POSITION SENSOR (2.4L) - BLACK 3 WAY

CAV	CIRCUIT	FUNCTION
1	F855 20PK/YL	5 VOLT SUPPLY
2	K900 20DB/DG	SENSOR GROUND
3	K24 20BR/LB	CKP SIGNAL

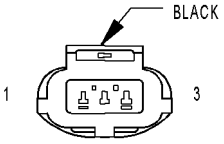

CRANKSHAFT POSITION SENSOR (3.7L)

CRANKSHAFT POSITION SENSOR (3.7L) - BLACK 3 WAY

CAV	CIRCUIT	FUNCTION
1	K24 20BR/LB	CKP SIGNAL
2	K900 20DB/DG	SENSOR GROUND
3	F855 20PK/YL	5 VOLT SUPPLY

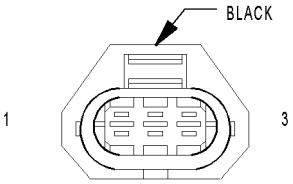

CRANKSHAFT POSITION SENSOR (DIESEL)

CRANKSHAFT POSITION SENSOR (DIESEL) - BLACK 3 WAY

CAV	CIRCUIT	FUNCTION
1	K853 20DB/BR	CRANKSHAFT POSITION SENSOR SIGNAL NO. 2
2	K3 20BR/LB	CRANKSHAFT POSITION SENSOR SIGNAL NO. 1
3	-	-

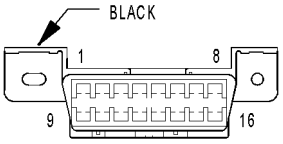

DATA LINK CONNECTOR

DATA LINK CONNECTOR - BLACK 16 WAY

CAV	CIRCUIT	FUNCTION
1	-	-
2	D25 20WT/VT	PCI BUS
3	-	-
4	Z11 20BK/LG	GROUND
5	Z11 20BK/LG	GROUND
6	-	-
7	D21 20WT/GY (DIESEL)	SCI TRANSMIT (ECM)
7	D21 20WT/GY (GAS)	SCI TRANSMIT (PCM)
8	-	-
9	D16 20WT/OR	SCI RECEIVE (TCM)
10	-	-
11	-	-
12	D20 20WT/LG (DIESEL)	SCI RECEIVE (ECM)
12	D20 20WT/LG (GAS)	SCI RECEIVE (PCM)
13	-	-
14	-	-
15	D15 20BR/WT	SCI TRANSMIT (TCM)
16	A333 20WT/RD	FUSED B(+)

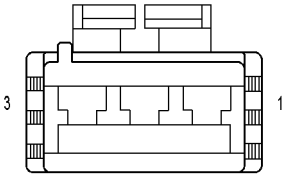

DOME LAMP

DOME LAMP (BASE) - 3 WAY

CAV	CIRCUIT	FUNCTION
1	-	-
2	A908 18RD	FUSED B(+)
3	Z327 20RD	GROUND

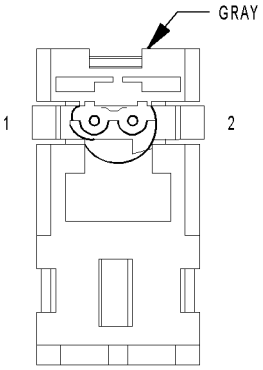

DRIVER AIRBAG SQUIB 1

DRIVER AIRBAG SQUIB 1 - GRAY 2 WAY

CAV	CIRCUIT	FUNCTION
1	R43 20LG/BR	DRIVER SQUIB 1 LINE 1
2	R45 20LG/OR	DRIVER SQUIB 1 LINE 2

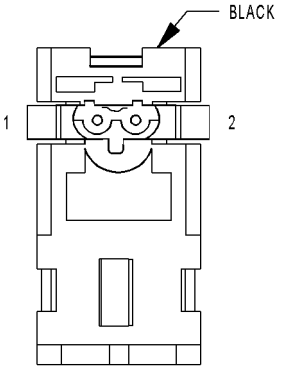

DRIVER AIRBAG SQUIB 2

DRIVER AIRBAG SQUIB 2 - BLACK 2 WAY

CAV	CIRCUIT	FUNCTION
1	R61 20LG/VT	DRIVER SQUIB 2 LINE 1
2	R63 20LG/WT	DRIVER SQUIB 2 LINE 2

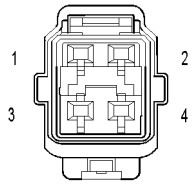

DRIVER DOOR LOCK MOTOR/ AJAR SWITCH (EXCEPT BASE)

DRIVER DOOR LOCK MOTOR/AJAR SWITCH (EXCEPT BASE) - 4 WAY

CAV	CIRCUIT	FUNCTION
1	G75 20VT (LHD)	LEFT FRONT DOOR AJAR SWITCH SENSE
1	G74 20VT (RHD)	RIGHT FRONT DOOR AJAR SWITCH SENSE
2	Z999 20BK (LHD)	GROUND
2	Z999 20BK (RHD)	GROUND
3	P34 16TN/LB (LHD)	DRIVER DOOR UNLOCK RELAY OUTPUT
3	P35 16TN/YL (RHD)	DRIVER DOOR UNLOCK RELAY OUTPUT
4	P33 16TN/YL	LOCK RELAY OUTPUT

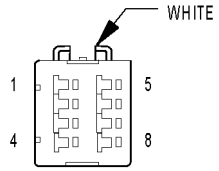

DRIVER POWER MIRROR (EXCEPT BASE)

DRIVER POWER MIRROR (EXCEPT BASE) - WHITE 8 WAY

CAV	CIRCUIT	FUNCTION
1	P71 20TN/DG (LHD)	LEFT MIRROR UP DRIVER
1	P72 20TN/GY (RHD)	RIGHT MIRROR UP DRIVER
2	P76 20TN/LB	MIRROR COMMON DRIVER
3	P75 20TN/LG (LHD)	LEFT MIRROR LEFT DRIVER
3	P74 20TN/OR (RHD)	RIGHT MIRROR LEFT DRIVER
4	P112 20TN/OR (EXCEPT POWER FOLD)	AUTO DAY/NIGHT MIRROR (+)
5	C16 20DB/GY	FUSED REAR WINDOW DEFOGGER RELAY OUTPUT
6	Z99 20BK	GROUND
7	P99 20LG/LB (POWER FOLD)	FOLDING MIRROR FEED
8	P114 20TN/WT (EXCEPT POWER FOLD)	AUTO DAY/NIGHT MIRROR (-)
8	P110 20LG/WT (POWER FOLD)	FOLDING MIRROR RETURN

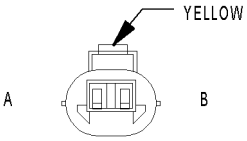

DRIVER SEAT BELT TENSIONER

DRIVER SEAT BELT TENSIONER - YELLOW 2 WAY

CAV	CIRCUIT	FUNCTION
1	R55 20LG/DG	DRIVER SEAT BELT TENSIONER LINE 1
2	R53 20LG/YL	DRIVER SEAT BELT TENSIONER LINE 2

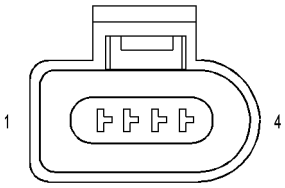

EGR AIR FLOW CONTROL VALVE (DIESEL)

EGR AIR FLOW CONTROL VALVE (DIESEL) - 4 WAY

CAV	CIRCUIT	FUNCTION
1	Z989 20BK	GROUND
2	K315 20BR/GY	EGR AIR FLOW CONTROL VALVE CONTROL
3	-	-
4	K347 20BR/PK	FUSED ASD RELAY OUTPUT

CONNECTOR NOT AVAILABLE

EGR SOLENOID (DIESEL) - 6 WAY

CAV	CIRCUIT	FUNCTION
1	K347 20BR/PK	FUSED ASD RELAY OUTPUT
2	-	-
3	-	-
4	-	-
5	K35 20DB/VT	EGR SOLENOID CONTROL
6	-	-

CONNECTOR NOT AVAILABLE

ENGINE CONTROL MODULE C1 (DIESEL) - 96 WAY

CAV	CIRCUIT	FUNCTION
1	K613 16GY/BR	FUEL INJECTOR NO. 1 LOW-SIDE CONTROL
2	K612 16YL/BR	FUEL INJECTOR NO. 2 LOW-SIDE CONTROL
3	-	-
4	K369 16BR/OR	FUEL PRESSURE SOLENOID SUPPLY
5	-	-
6	-	-
7	-	-
8	K156 20BR/YL	FUEL TEMPERATURE SENSOR SIGNAL
9	-	-
10	-	-
11	K156 20BR/YL (A/T)	FUEL TEMPERATURE SENSOR SIGNAL
12	-	-
13	-	-
14	K944 20BR/GY	CAMSHAFT POSITION SENSOR GROUND
15	-	-
16	-	-
17	-	-
18	-	-
19	-	-
20	-	-
21	-	-
22	-	-
23	-	-
24	-	-
25	K611 16OR/BR	FUEL INJECTOR NO. 1 LOW-SIDE CONTROL
26	K614 16WT/BR	FUEL INJECTOR NO. 4 LOW-SIDE CONTROL
27	-	-
28	K366 16BR/LG	FUEL QUANTITY SOLENOID SUPPLY
29	-	-
30	V37 20VT	S/C SWITCH SIGNAL NO. 1
31	G31 20VT/OR	AAT SIGNAL
32	K960 20BR/LB	INLET PRESSURE SENSOR GROUND
33	-	-
34	K21 20BR/WT	IAT SENSOR SIGNAL
35	-	-
36	K668 20BR	INLET PRESSURE SENSOR 5 VOLT SUPPLY
37	F856 20YL/PK	CAMSHAFT POSITION SENSOR 5 VOLT SUPPLY
38	K44 20DB/GY	CAMSHAFT POSITION SENSOR SIGNAL
39	-	-
40	-	-
41	-	-
42	-	-
43	-	-
44	-	-
45	K132 20DB/LB	CABIN HEATER RELAY CONTROL
46	-	-
47	-	-
48	-	-
49	K12 16BR/DB	FUEL INJECTOR NO. 2 HIGH-SIDE CONTROL
50	-	-
51	K14 16BR/TN	FUEL INJECTOR NO. 4 HIGH-SIDE CONTROL
52	K370 16BR	FUEL PRESSURE SOLENOID CONTROL
53	-	-
54	V38 20VT/OR	S/C SWITCH SIGNAL NO. 2

ENGINE CONTROL MODULE C1 (DIESEL) - 96 WAY

CAV	CIRCUIT	FUNCTION
55	-	-
56	-	-
57	K2 20VT/OR	ECT SENSOR SIGNAL
58	K68 20BR/LG	INLET PRESSURE SENSOR SIGNAL
59	K181 20BR/YL	FUEL PRESSURE SENSOR SIGNAL
60	K856 20BR/YL	BOOST PRESSURE SENSOR 5 VOLT SUPPLY
61	K957 20BR/OR	MASS AIR FLOW SENSOR GROUND
62	-	-
63	K37 20BR/OR	BOOST PRESSURE SENSOR SIGNAL
64	K811 20BR/OR	MASS AIR FLOW SENSOR 5 VOLT SUPPLY
65	K900 20DB/DG	SENSOR GROUND
66	-	-
67	-	-
68	K315 20BR/GY	EGR AIR FLOW CONTROL VALVE CONTROL
69	-	-
70	-	-
71	N112 20DB/OR	HIGH SPEED RAD FAN RELAY CONTROL
72	-	-
73	K13 16BR/LB	FUEL INJECTOR NO. 3 HIGH-SIDE CONTROL
74	K11 16BR/YL	FUEL INJECTOR NO. 1 HIGH-SIDE CONTROL
75	-	-
76	K646 16BR/YL	FUEL QUANTITY SOLENOID CONTROL
77	-	-
78	-	-
79	T26 20DG/OR	CLUTCH UPSTOP SWITCH SIGNAL
80	-	-
81	-	-
82	K77 20BR/WT	TRANSFER CASE POSITION SENSOR INPUT
83	K656 20GY/BR	SENSOR GROUND
84	K359 20YL/BR	FUEL PRESSURE SENSOR GROUND
85	K157 20BR/OR	MASS AIR FLOW 5 VOLT SUPPLY
86	K350 20BR/YL	FUEL PRESSURE SENSOR 5 VOLT SUPPLY
87	K853 20DB/BR	CRANKSHAFT POSITION SENSOR SIGNAL NO. 2
88	K3 20BR/LB	CRANKSHAFT POSITION SENSOR SIGNAL NO. 1
89	-	-
90	K35 20DB/VT	EGR SOLENOID CONTROL
91	N201 20DB/LG	LOW SPEED RAD FAN RELAY CONTROL
92	N117 20DB/WT	VACUUM RESERVOIR SOLENOID CONTROL
93	X635 20BR/WT	BOOST PRESSURE SOLENOID CONTROL
94	-	-
95	-	-
96	-	-

CONNECTOR NOT AVAILABLE

ENGINE CONTROL MODULE C2 (DIESEL) - 58 WAY

CAV	CIRCUIT	FUNCTION
1	K347 14BR/PK	FUSED ASD RELAY OUTPUT
2	Z131 14BK/DG	GROUND
3	K347 14BR/PK	FUSED ASD RELAY OUTPUT
4	Z131 14BK/DG	GROUND
5	K345 14BR/RD	FUSED ASD RELAY OUTPUT
6	Z131 14BK/DG	GROUND
7	-	-
8	C20 20DB/YL	A/C SWITCH SENSE
9	-	-
10	-	-
11	-	-
12	-	-
13	K29 20WT/BR	ACCELERATOR PEDAL POSITION SENSOR SIGNAL 2
14	K400 20BR/VT	ACCELERATOR PEDAL POSITION SENSOR GROUND 2
15	-	-
16	-	-
17	T41 20YL/DB (A/T)	PARK/NEUTRAL POSITION SWITCH SENSE
17	T141 20YL/OR (M/T)	CLUTCH INTERLOCK SWITCH SIGNAL
18	K244 20BR/WT (A/T)	ENGINE RPM SIGNAL
19	F1 20PK/WT	FUSED IGNITION SWITCH OUTPUT (RUN-START)
20	-	-
21	-	-
22	F26 20PK/OR	FUSED IGNITION SWITCH OUTPUT (START)
23	-	-
24	K852 20BR/VT	ACCELERATOR PEDAL POSITION SENSOR 5-VOLT SUPPLY 1
25	K23 20BR/WT	ACCELERATOR PEDAL POSITION SENSOR SIGNAL 1
26	K167 20BR/YL	ACCELERATOR PEDAL POSITION SENSOR GROUND 1
27	-	-
28	-	-
29	K854 20VT/BR	ACCELERATOR PEDAL POSITION SENSOR 5-VOLT SUPPLY 2
30	-	-
31	D21 20WT/GY	SCI TRANSMIT (ECM)
32	L50 18WT/TN	BRAKE LAMP SWITCH OUTPUT
33	-	-
34	B15 20DG/WT	BRAKE SWITCH SENSE
35	-	-
36	-	-
37	-	-
38	-	-
39	-	-
40	C13 20LB/OR	A/C CLUTCH RELAY CONTROL
41	-	-
42	-	-
43	D330 20WT/BR	GLOW PLUG MODULE SIGNAL
44	K342 20BR/WT	ASD RELAY CONTROL
45	K391 20BR/YL	No Function Defined
46	K330 20LB/BR	GLOW PLUG MODULE CONTROL
47	-	-
48	-	-
49	-	-
50	-	-
51	-	-
52	-	-
53	D65 20WT/LG	CAN C BUS (+)
54	D64 20WT/LB	CAN C BUS (-)
55	-	-
56	-	-
57	-	-
58	T752 20DG/OR	ENGINE STARTER MOTOR RELAY CONTROL

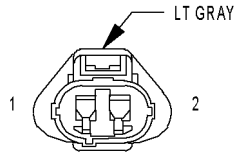

ENGINE COOLANT LEVEL SENSOR (DIESEL)

ENGINE COOLANT LEVEL SENSOR (DIESEL) - 2 WAY

CAV	CIRCUIT	FUNCTION
1	G18 20OR/VT	LOW COOLANT FLUID LEVEL SENSE
2	Z939 20BK	GROUND

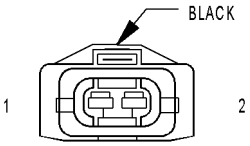

ENGINE COOLANT TEMPERATURE SENSOR (DIESEL)

ENGINE COOLANT TEMPERATURE SENSOR (DIESEL) - 2 WAY

CAV	CIRCUIT	FUNCTION
1	K2 20VT/OR	ECT SENSOR SIGNAL
2	K900 20DB/DG	SENSOR GROUND

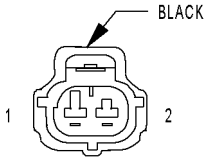

ENGINE COOLANT TEMPERATURE SENSOR (GAS)

ENGINE COOLANT TEMPERATURE SENSOR (GAS) - 2 WAY

CAV	CIRCUIT	FUNCTION
1	K900 20DB/DG	SENSOR GROUND
2	K2 20VT/OR	ECT SIGNAL

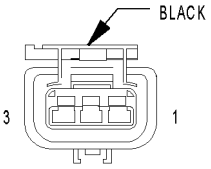

ENGINE OIL PRESSURE SENSOR (DIESEL)

ENGINE OIL PRESSURE SENSOR (DIESEL) - BLACK 3 WAY

CAV	CIRCUIT	FUNCTION
1	K301 20BR/LG	5 VOLT SUPPLY
2	K302 20BR/WT	ENGINE OIL PRESSURE SENSOR SIGNAL
3	K300 20BR	SENSOR GROUND

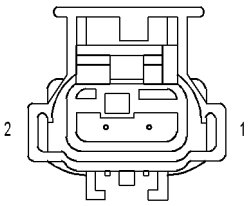

ENGINE OIL PRESSURE SWITCH (GAS)

ENGINE OIL PRESSURE SWITCH (GAS) - 2 WAY

CAV	CIRCUIT	FUNCTION
1	G6 20VT/GY	ENGINE OIL PRESSURE SIGNAL
2	-	-

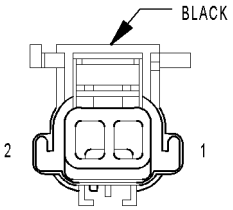

EVAP/PURGE SOLENOID (GAS)

EVAP/PURGE SOLENOID (GAS) - BLACK 2 WAY

CAV	CIRCUIT	FUNCTION
1	K70 20DB/BR	EVAP PURGE SOL SIGNAL
2	K52 20DB/WT	EVAP PURGE SOL CONTROL

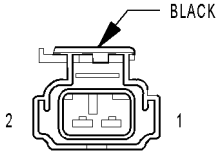

FLIP-UP GLASS RELEASE MOTOR

FLIP-UP GLASS RELEASE MOTOR - BLACK 2 WAY

CAV	CIRCUIT	FUNCTION
1	Z213 18BK/OR	GROUND
2	P100 20DB/LG	FLIP-UP GLASS RELEASE MOTOR DRIVER

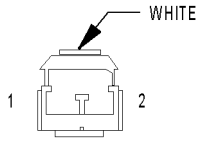

FLIP-UP GLASS RELEASE SWITCH

FLIP-UP GLASS RELEASE SWITCH - WHITE 2 WAY

CAV	CIRCUIT	FUNCTION
1	G910 20VT/BR	TAILGATE SWITCH GROUND
2	P101 20LG/WT	FLIP-UP GLASS RELEASE SWITCH SENSE

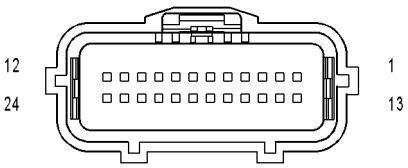

FRONT CONTROL MODULE

FRONT CONTROL MODULE (DIESEL) - 24 WAY

CAV	CIRCUIT	FUNCTION
1	-	-
2	D25 18WT/VT	PCI BUS
3	-	-
4	-	-
5	D21 20WT/GY	SCI TRANSMIT (ECM)
6	-	-
7	K302 20BR/WT	ENGINE OIL PRESSURE SENSOR SIGNAL
8	D65 20WT/LG	CAN C BUS (+)
9	D64 20WT/LB	CAN C BUS (-)
10	K303 20BR/OR	WATER IN FUEL SENSOR SIGNAL
11	K305 20BR/LB	A/C PRESSURE SENSOR SIGNAL
12	-	-
13	K347 20BR/PK	FUSED ASD RELAY OUTPUT
14	K125 16BR/DG	GEN FIELD CONTROL
15	-	-
16	K301 20BR/LG	5 VOLT SUPPLY
17	K304 20BR/DB	FUEL LEVEL SENSOR SIGNAL
18	-	-
19	-	-
20	K300 20BR	SENSOR GROUND
21	-	-
22	K310 20BR/DG	A/C PRESSURE SENSOR GROUND
23	-	-
24	Z932 18BK	GROUND

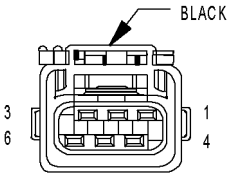

FRONT WIPER MOTOR

FRONT WIPER MOTOR - BLACK 6 WAY

CAV	CIRCUIT	FUNCTION
1	A5 16RD/VT	FUSED IGNITION SWITCH OUTPUT (RUN-ACC)
2	W7 16BR/GY	FRONT WIPER PARK SWITCH SENSE
3	-	-
4	Z931 16BK	GROUND
5	W3 16BR/WT	FRONT WIPER HIGH/LOW RELAY LOW SPEED OUTPUT
6	W4 16BR/OR	FRONT WIPER HIGH/LOW RELAY HIGH SPEED OUTPUT

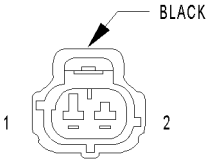

FUEL HEATER (DIESEL)

FUEL HEATER (DIESEL) - BLACK 2 WAY

CAV	CIRCUIT	FUNCTION
1	A993 16RD	FUEL HEATER RELAY OUTPUT
2	Z939 18BK	GROUND

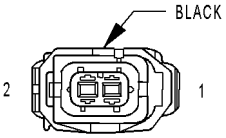

FUEL INJECTOR NO. 1 (DIESEL)

FUEL INJECTOR NO. 1 (DIESEL) - BLACK 2 WAY

CAV	CIRCUIT	FUNCTION
1	K611 16OR/BR	FUEL INJECTOR NO. 1 LOW-SIDE CONTROL
2	K11 16BR/YL	FUEL INJECTOR NO. 1 HIGH-SIDE CONTROL

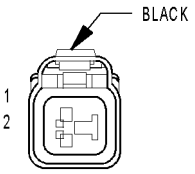

FUEL INJECTOR NO. 1 (GAS)

FUEL INJECTOR NO. 1 (GAS) - BLACK 2 WAY

CAV	CIRCUIT	FUNCTION
1	F142 16PK/GY	FUSED ASD RELAY OUTPUT
2	K11 16BR/YL	INJECTOR CONTROL NO. 1

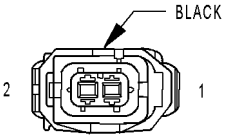

FUEL INJECTOR NO. 2 (DIESEL)

FUEL INJECTOR NO. 2 (DIESEL) - BLACK 2 WAY

CAV	CIRCUIT	FUNCTION
1	K612 16YL/BR	FUEL INJECTOR NO. 2 LOW-SIDE CONTROL
2	K12 16BR/DB	FUEL INJECTOR NO. 2 HIGH-SIDE CONTROL

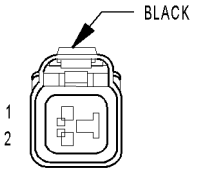

FUEL INJECTOR NO. 2 (GAS)

FUEL INJECTOR NO. 2 (GAS) - BLACK 2 WAY

CAV	CIRCUIT	FUNCTION
1	F142 16PK/GY	FUSED ASD RELAY OUTPUT
2	K12 16BR/DB	INJECTOR CONTROL NO. 2

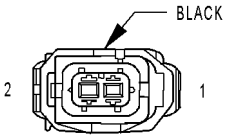

FUEL INJECTOR NO. 3 (DIESEL)

FUEL INJECTOR NO. 3 (DIESEL) - BLACK 2 WAY

CAV	CIRCUIT	FUNCTION
1	K613 16GY/BR	FUEL INJECTOR NO. 3 LOW-SIDE CONTROL
2	K13 16BR/LB	FUEL INJECTOR NO. 3 HIGH-SIDE CONTROL

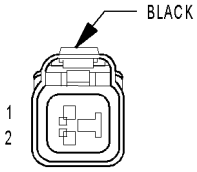

FUEL INJECTOR NO. 3 (GAS)

FUEL INJECTOR NO. 3 (GAS) - BLACK 2 WAY

CAV	CIRCUIT	FUNCTION
1	F142 16PK/GY	FUSED ASD RELAY OUTPUT
2	K13 16BR/LB	INJECTOR CONTROL NO. 3

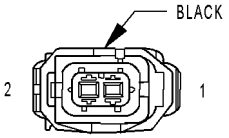

FUEL INJECTOR NO. 4 (DIESEL)

FUEL INJECTOR NO. 4 (DIESEL) - BLACK 2 WAY

CAV	CIRCUIT	FUNCTION
1	K614 16WT/BR	FUEL INJECTOR NO. 4 LOW-SIDE CONTROL
2	K14 16BR/TN	FUEL INJECTOR NO. 4 HIGH-SIDE CONTROL

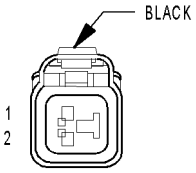

FUEL INJECTOR NO. 4 (GAS)

FUEL INJECTOR NO. 4 (GAS) - BLACK 2 WAY

CAV	CIRCUIT	FUNCTION
1	F142 16PK/GY	FUSED ASD RELAY OUTPUT
2	K14 16BR/TN	INJECTOR CONTROL NO. 4

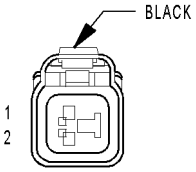

FUEL INJECTOR NO. 5 (3.7L)

FUEL INJECTOR NO. 5 (3.7L) - BLACK 2 WAY

CAV	CIRCUIT	FUNCTION
1	F142 16PK/GY	FUSED ASD RELAY OUTPUT
2	K38 16BR/OR	INJECTOR CONTROL NO. 5

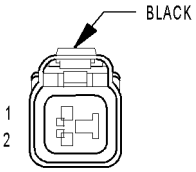

FUEL INJECTOR NO. 6 (3.7L)

FUEL INJECTOR NO. 6 (3.7L) - BLACK 2 WAY

CAV	CIRCUIT	FUNCTION
1	F142 16PK/GY	FUSED ASD RELAY OUTPUT
2	K58 16BR/VT	INJECTOR CONTROL NO. 6

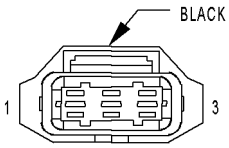

FUEL PRESSURE SENSOR (DIESEL)

FUEL PRESSURE SENSOR (DIESEL) - BLACK 3 WAY

CAV	CIRCUIT	FUNCTION
1	K359 20YL/BR	FUEL PRESSURE SENSOR GROUND
2	K181 20BR/YL	FUEL PRESSURE SENSOR SIGNAL
3	K350 20BR/YL	FUEL PRESSURE SENSOR 5 VOLT SUPPLY

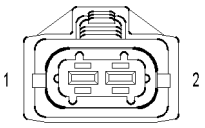

FUEL PRESSURE SOLENOID (DIESEL)

FUEL PRESSURE SOLENOID (DIESEL) - 2 WAY

CAV	CIRCUIT	FUNCTION
1	K370 16BR	FUEL PRESSURE SOLENOID CONTROL
2	K369 16BR/OR	FUEL PRESSURE SOLENOID SUPPLY

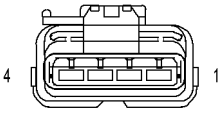

FUEL PUMP MODULE

FUEL PUMP MODULE - 4 WAY

CAV	CIRCUIT	FUNCTION
1	Z201 18BK (GAS)	GROUND
2	K300 20BR (DIESEL)	SENSOR GROUND
2	K900 20DB/DG (GAS)	SENSOR GROUND
3	K304 20BR/DB (DIESEL)	FUEL LEVEL SENSOR SIGNAL
3	N4 20DB/YL (GAS)	FUEL LEVEL SIGNAL
4	N1 18DG/OR (GAS)	FUEL PUMP RELAY OUTPUT

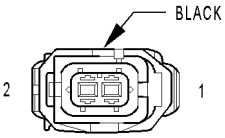

FUEL QUANTITY SOLENOID (DIESEL)

FUEL QUANTITY SOLENOID (DIESEL) - BLACK 2 WAY

CAV	CIRCUIT	FUNCTION
1	K366 16BR/LG	FUEL QUANTITY SOLENOID SUPPLY
2	K646 16BR/YL	FUEL QUANTITY SOLENOID CONTROL

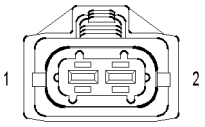

FUEL TEMPERATURE SENSOR (DIESEL)

FUEL TEMERATURE SENSOR (DIESEL) - 2 WAY

CAV	CIRCUIT	FUNCTION
1	K900 20DB/DG	SENSOR GROUND
2	K156 20BR/YL	FUEL TEMPERATURE SENSOR SIGNAL

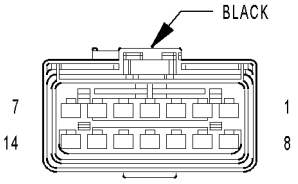

G202

G202 - BLACK 14 WAY

CAV	CIRCUIT	FUNCTION
1	Z945 18BK	GROUND
2	Z40 14BK	GROUND
3	Z120 20BK/WT (EXCEPT BASE)	GROUND
4	-	-
5	Z950 20BK (RHD)	GROUND
6	Z18 20BK/LB	GROUND
7	Z10 16BK/TN	GROUND
8	Z15 16BK/TN	GROUND
9	Z943 14BK	GROUND
10	Z944 16BK	GROUND
11	Z938 20BK	GROUND
12	-	-
13	-	-
14	-	-

GENERATOR

GENERATOR - 2 WAY

CAV	CIRCUIT	FUNCTION
1	K125 16BR/DG	GEN FIELD CONTROL
2	Z932 18BK	GROUND

CONNECTOR NOT AVAILABLE

GLOW PLUG MODULE (DIESEL) - 11 WAY

CAV	CIRCUIT	FUNCTION
1	A202 14RD/WT	NO FUNCTION DEFINED
2	A203 14RD/BR	NO FUNCTION DEFINED
3	A204 14RD/YL	NO FUNCTION DEFINED
4	A208 14RD/OR	FUSED B(+)
5	-	-
6	K347 20BR/PK	FUSED ASD RELAY OUTPUT
7	Z133 18BK/LG	GROUND
8	-	-
9	D330 20WT/BR	GLOW PLUG MODULE SIGNAL
10	K330 20LB/BR	GLOW PLUG MODULE CONTROL
11	A2 10GY	FUSED B(+)

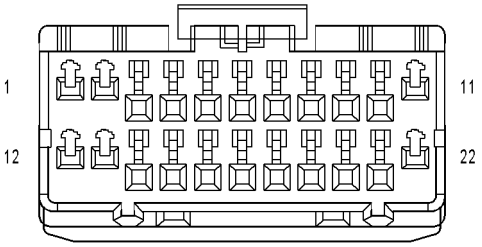

HANDS FREE MODULE C1

HANDS FREE MODULE C1 - 22 WAY

CAV	CIRCUIT	FUNCTION
1	A908 18RD	FUSED B(+)
2	-	-
3	-	-
4	-	-
5	X722 20LB/DG	MICROPHONE 2 IN(+)
6	-	-
7	-	-
8	-	-
9	-	-
10	-	-
11	-	-
12	-	-
13	-	-
14	-	-
15	X730 20GY/YL	VOICE RECOGNITION/PHONE SWITCH SIGNAL
16	X712 20DG/LB	MICROPHONE 1 IN(+)
17	X792 20DG/YL	MICROPHONE IN(-)
18	-	-
19	-	-
20	X793 20DG/YL	IGNITION RUN/ACC SIGNAL
21	X835 20OR/GY	SENSOR GROUND
22	Z530 20GY/BK	GROUND

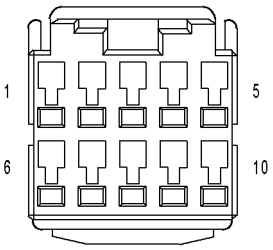

HANDS FREE MODULE C2 (SATELLITE)

HANDS FREE MODULE C2 (SATELLITE) - 10 WAY

CAV	CIRCUIT	FUNCTION
1	X40 20GY/WT	AUDIO MUX RIGHT
2	X140 20GY/OR	SHIELD
3	X235 20GY	AUDIO RETURN
4	D25 20WT/VT	PCI BUS
5	X112 20LG/GY	IGNITION RUN/ACC SIGNAL
6	X41 20DG/WT	AUDIO MUX LEFT
7	Z515 20BK	GROUND
8	-	
9	-	
10	X160 20GY/YL	FUSED B(+)

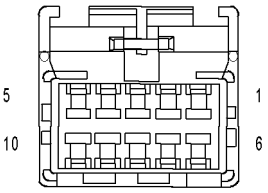

HANDS FREE MODULE C3

HANDS FREE MODULE C3 - 10 WAY

CAV	CIRCUIT	FUNCTION
1	X112 20LG/GY	IGNITION RUN/ACC SIGNAL
2	D25 20WT/VT	PCI BUS
3	X235 20GY	AUDIO RETURN
4	X140 20GY/OR	SHIELD
5	X40 20GY/WT	AUDIO MUX RIGHT
6	X160 20GY/YL	FUSED B(+)
7	-	-
8	-	-
9	Z515 20BK	GROUND
10	X41 20DG/WT	AUDIO MUX LEFT

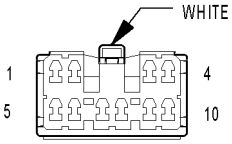

HAZARD SWITCH/ COMBINATION FLASHER

HAZARD SWITCH/COMBINATION FLASHER - WHITE 10 WAY

CAV	CIRCUIT	FUNCTION
1	A701 18BR/RD	FUSED B(+)
2	Z940 16BK	GROUND
3	L62 18WT/OR	RIGHT TURN SIGNAL
4	L91 18WT/DB	HAZARD LAMP CONTROL
5	L305 20WT/LB	LEFT TURN SWITCH SENSE
6	-	-
7	L63 18WT/DG	LEFT TURN SIGNAL
8	C115 20DB	FUSED IGNITION SWITCH OUTPUT (RUN)
9	L302 20LB/WT	RIGHT TURN SWITCH SENSE
10	E2 20OR/BR	PANEL LAMPS DRIVER

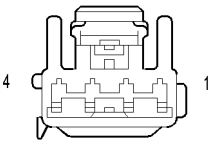

HEADLAMP LEVELING SWITCH (EXPORT)

HEADLAMP LEVELING SWITCH (EXPORT) - 4 WAY

CAV	CIRCUIT	FUNCTION
1	L13 18WT/YL	HEADLAMP ADJUST SIGNAL
2	L78 18WT/OR	FUSED PARK LAMP RELAY OUTPUT
3	Z945 18BK	GROUND
4	-	-

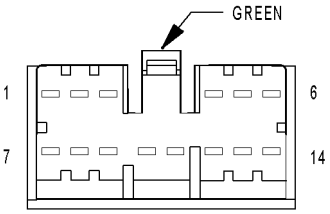

HEATED SEAT MODULE (HIGHLINE)

HEATED SEAT MODULE (HIGHLINE) - GREEN 14 WAY

CAV	CIRCUIT	FUNCTION
1	P133 20TN/DG	LEFT SEAT HEATER SWITCH MUX
2	P86 20PK/BK	HEATED SEAT TEMPERATURE SENSOR SIGNAL
3	F98 16RD/WT	PASSENGER HEATED SEAT FEED
4	A902 16RD/WT	FUSED B(+)
5	F99 16RD/WT	DRIVER HEATED SEAT FEED
6	A902 16RD/WT	FUSED B(+)
7	P142 20TN/DB	PASSENGER HEATED SEAT TEMPERATURE SENSOR GROUND
8	P141 20TN/LB	DRIVER HEATED SEAT TEMPERATURE SENSOR GROUND
9	P134 20TN/LG	RIGHT SEAT HEATER SWITCH MUX
10	P138 20VT/LG	RIGHT SEAT LOW HEAT LED DRIVER
11	P140 20VT/BK	RIGHT SEAT HIGH HEAT LED DRIVER
12	P137 20VT/DG	LEFT SEAT LOW HEAT LED DRIVER
13	Z849 20BK/WT	GROUND
14	P139 20VT/WT	LEFT SEAT HIGH HEAT LED DRIVER

HIGH BEAM RELAY

CAV	CIRCUIT	FUNCTION
30	INTERNAL	FUSED B(+)
85	INTERNAL	FUSED B(+)
86	INTERNAL	HIGH BEAM RELAY CONTROL
87	INTERNAL	FRONT FOG LAMP RELAY OUTPUT
87A	-	-

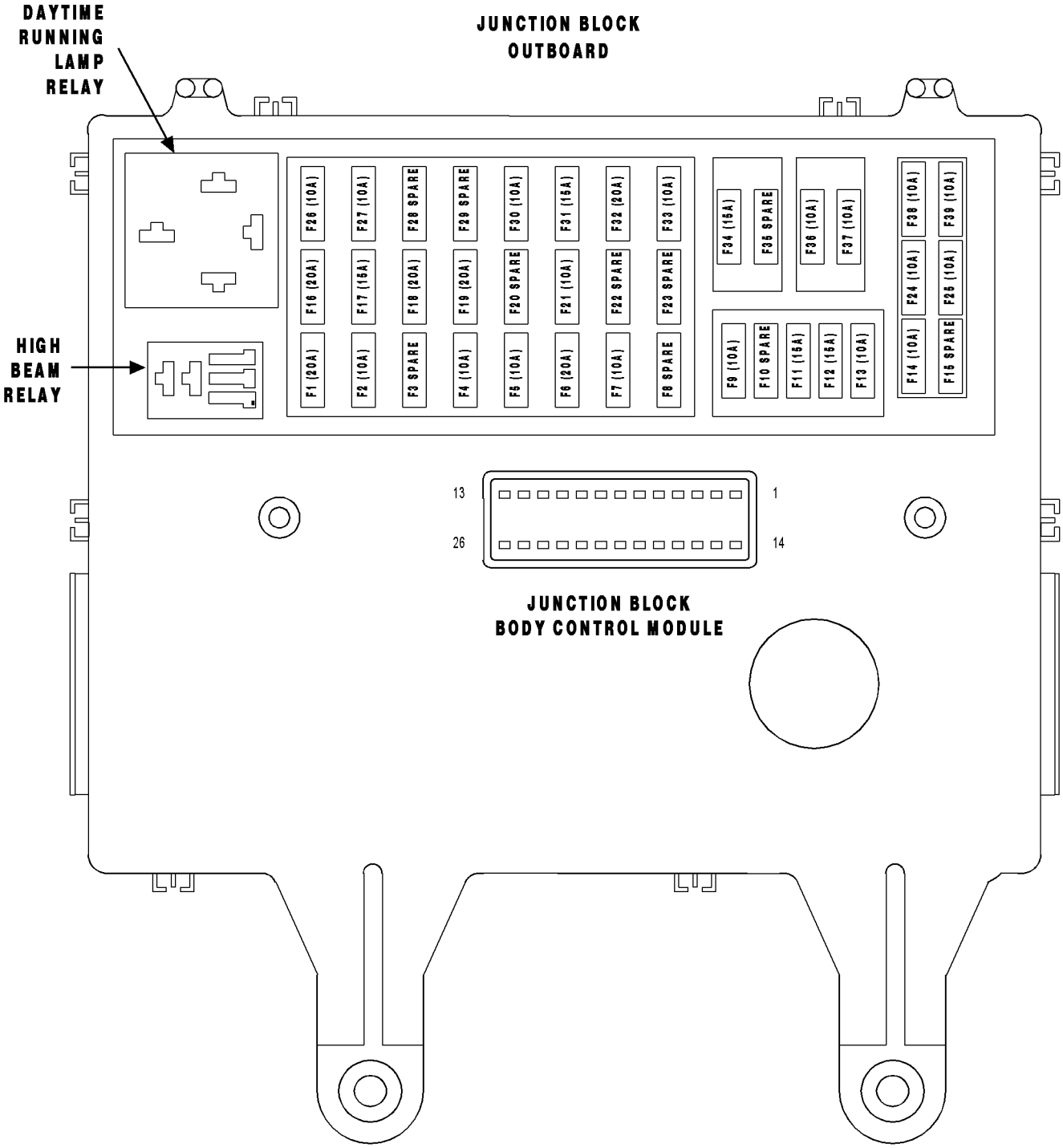

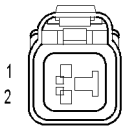

HIGH NOTE HORN

HIGH NOTE HORN - 2 WAY

CAV	CIRCUIT	FUNCTION
A1	X2 18DG/OR	HORN RELAY OUTPUT
A2	Z931 18BK	GROUND

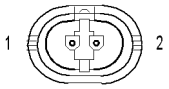

HOOD AJAR SWITCH (EXCEPT BASE)

HOOD AJAR SWITCH (EXCEPT BASE) - 2 WAY

CAV	CIRCUIT	FUNCTION
1	G70 20VT/LB	HOOD AJAR SWITCH SENSE
2	Z932 20BK	GROUND

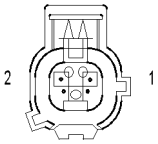

IDLE AIR CONTROL MOTOR

IDLE AIR CONTROL MOTOR - 2 WAY

CAV	CIRCUIT	FUNCTION
1	K961 20BR/VT	IAC SIGNAL
2	K61 20VT/GY	IAC CONTROL

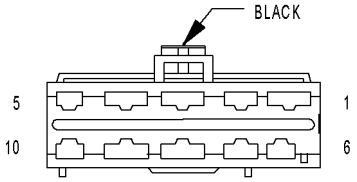

IGNITION SWITCH

IGNITION SWITCH - BLACK 10 WAY

CAV	CIRCUIT	FUNCTION
1	A1 12RD	FUSED B(+)
2	F944 12PK/LG	IGNITION SWITCH OUTPUT (RUN-START)
3	-	-
4	-	-
5	G15 20VT/TN	KEY-IN IGNITION SWITCH SENSE
6	A106 12LB/RD	IGNITION SWITCH OUTPUT (START)
7	F981 12PK/YL	IGNITION SWITCH OUTPUT (RUN-ACC)
8	F921 12PK/YL	IGNITION SWITCH OUTPUT (RUN)
9	A916 12RD	FUSED B(+)
10	Z938 20BK	GROUND

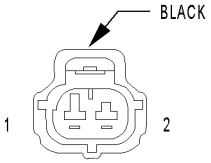

INPUT SPEED SENSOR (A/T)

INPUT SPEED SENSOR (A/T) - BLACK 2 WAY

CAV	CIRCUIT	FUNCTION
1	T52 20DG/WT	INPUT SPEED SENSOR SIGNAL
2	T13 20DG/VT	SPEED SENSOR GROUND

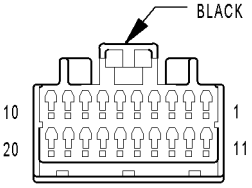

INSTRUMENT CLUSTER

INSTRUMENT CLUSTER - BLACK 20 WAY

CAV	CIRCUIT	FUNCTION
1	A908 18RD	FUSED B(+)
2	-	-
3	G69 20VT/WT	VTSS INDICATOR DRIVER
4	B25 20DG/WT	PARK BRAKE SWITCH SENSE
5	L63 18WT/OR	LEFT TURN SIGNAL
6	G18 20PK/BK	LOW COOLANT FLUID LEVEL SENSE
7	-	-
8	G150 20VT/BR	INSTRUMENT CLUSTER WAKE UP SIGNAL
9	-	-
10	Z18 20BK/LB	GROUND
11	-	-
12	F942 20PK/LG	FUSED IGNITION SWITCH OUTPUT (RUN-START)
13	W1 20BR/TN	LOW WASHER FLUID SENSE
14	B20 20DG/OR	RED BRAKE WARNING INDICATOR DRIVER
15	L62 18WT/OR	RIGHT TURN SIGNAL
16	-	-
17	D25 20WT/VT	PCI BUS
18	-	-
19	E2 20OR/BR	PANEL LAMPS DRIVER
20	L78 18WT/OR	FUSED PARK LAMP RELAY OUTPUT

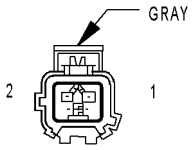

INTAKE AIR TEMPERATURE SENSOR (GAS)

INTAKE AIR TEMPERATURE SENSOR (GAS) - GRAY 2 WAY

CAV	CIRCUIT	FUNCTION
1	K900 20DB/DG	SENSOR GROUND
2	K21 20BR/WT	IAT SIGNAL

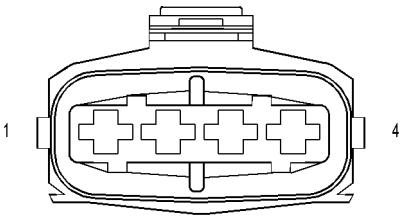

INTAKE AIR TEMPERATURE/ BOOST PRESSURE SENSOR (DIESEL)

INTAKE AIR TEMPERATURE/BOOST PRESSURE SENSOR (DIESEL) - 4 WAY

CAV	CIRCUIT	FUNCTION
1	K656 20GY/BR	SENSOR GROUND
2	K21 20BR/WT	IAT SENSOR SIGNAL
3	K856 20BR/YL	BOOST PRESSURE SENSOR 5 VOLT SUPPLY
4	K37 20BR/OR	BOOST PRESSURE SENSOR SIGNAL

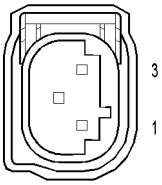

INTAKE PRESSURE SENSOR (DIESEL)

INTAKE PRESSURE SENSOR (DIESEL) - 3 WAY

CAV	CIRCUIT	FUNCTION
1	K960 20BR/LB	INLET PRESSURE SENSOR GROUND
2	K68 20BR/LG	INLET PRESSURE SENSOR SIGNAL
3	K668 20BR	INLET PRESSURE SENSOR 5 VOLT SUPPLY

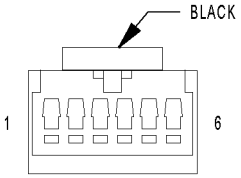

INTRUSION TRANSCEIVER MODULE (EXPORT)

INTRUSION TRANSCEIVER MODULE (EXPORT) - BLACK 6 WAY

CAV	CIRCUIT	FUNCTION
1	Z18 20BK/LB	GROUND
2	-	-
3	X75 18GY/DG	SIREN SIGNAL CONTROL
4	-	-
5	D25 20WT/VT	PCI BUS
6	A908 18RD	FUSED B(+)

JUNCTION BLOCK BODY CONTROL MODULE-JB - 26 WAY

CAV	CIRCUIT	FUNCTION
1	X3 (PREMIUM)	HORN RELAY CONTROL
2	P334	DOOR UNLOCK RELAY CONTROL
3	L779	PARK LAMP RELAY CONTROL
4	L239 (RHD/LHD HIGHLINE)	REAR FOG LAMP RELAY CONTROL
5	P109 (EXCEPT BASE)	DRIVER DOOR UNLOCK RELAY CONTROL
6	C515	REAR WINDOW DEFOGGER RELAY CONTROL
7	P305 (EXCEPT BASE)	ACCESSORY DELAY RELAY CONTROL
8	Z944	GROUND
9	A213	FUSED B(+)
10	L309	HIGH BEAM RELAY CONTROL
11	P31	TAILGATE UNLOCK DRIVER
12	P37	DOOR LOCK SWITCH GROUND
13	L45	LOW BEAM RELAY CONTROL
14	F98	FUSED IGNITION SWITCH OUTPUT (RUN-ACC)
15	A908	FUSED B(+)
16	F942	FUSED IGNITION SWITCH OUTPUT (RUN-START)
17	L139 (EXCEPT BASE)	FRONT FOG LAMP RELAY CONTROL
18	P333	DOOR LOCK RELAY CONTROL
19	W2	FRONT WIPER HIGH/LOW RELAY CONTROL
20	W7	FRONT WIPER PARK SWITCH SENSE
21	W6	FRONT WIPER ON/OFF RELAY CONTROL
22	P30	TAILGATE LOCK DRIVER
23	P36	DOOR LOCK SWITCH MUX
24	Z327	GROUND
25	Z943	GROUND
26	M20	COURTESY LAMP LOAD SHED

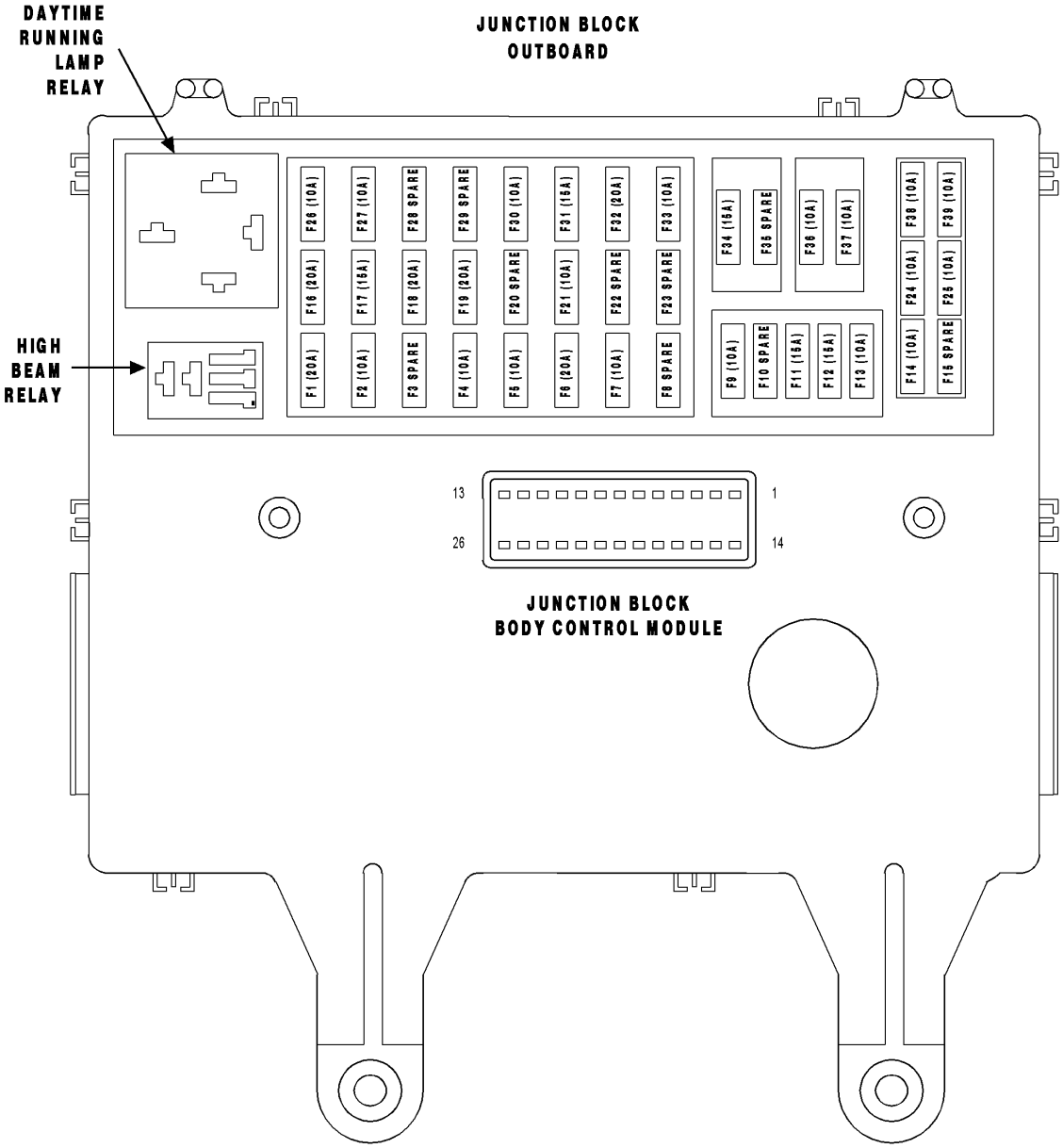

CONNECTOR NOT AVAILABLE

JUNCTION BLOCK C1 - 42 WAY

CAV	CIRCUIT	FUNCTION
1	-	-
2	-	-
3	F944 12PK/LG	IGNITION SWITCH OUTPUT (RUN-START)
4	E2 20OR/BR	PANEL LAMPS DRIVER
5	E2 20OR/BR	PANEL LAMPS DRIVER
6	-	-
7	X3 20DG/VT	HORN RELAY CONTROL
8	L78 18WT/OR	FUSED PARK LAMP RELAY OUTPUT
9	A207 16RD/LG (LHD)	FUSED B(+)
10	E2 20OR.BR (LIGHT BAR)	PANEL LAMPS DRIVER
11	E2 20OR	PANEL LAMPS DRIVER
12	-	-
13	A333 20WT/RD	FUSED B(+)
14	A908 18RD	FUSED B(+)
15	A908 18RD	FUSED B(+)
16	L50 18WT/TN	BRAKE LAMP SWITCH OUTPUT
17	Z944 16BK	GROUND
18	-	-
19	-	-
20	Z943 14BK	GROUND
21	L309 20WT/OR	HIGH BEAM RELAY CONTROL
22	-	-
23	Z327 20BK/WT	GROUND
24	Z327 20BK/WT	GROUND
25	F943 20PK/LG	NO FUNCTION DEFINED
26	A333 20WT/RD (SENTRY KEY)	FUSED B(+)
27	A908 18RD	FUSED B(+)
28	F302 20GY/PK	NO FUNCTION DEFINED
29	F302 20GY/PK	NO FUNCTION DEFINED
30	-	-
31	F942 20PK/LG	NO FUNCTION DEFINED
32	-	-
33	F1 20PK/WT (RHD)	
34	C16 20DB/GY	
35	F307 16LB/PK (RHD)	NO FUNCTION DEFINED
36	-	-
37	A103 18GY/RD	FUSED B(+)
38	C115 20DB	FUSED IGNITION SWITCH OUTPUT (RUN)
39	F100 20PK/VT	NO FUNCTION DEFINED
40	F981 12PK/YL	IGNITION SWITCH OUTPUT (RUN-ACC)
41	A701 18BR/RD	FUSED B(+)
42	F921 12PK/YL	IGNITION SWITCH OUTPUT (RUN)

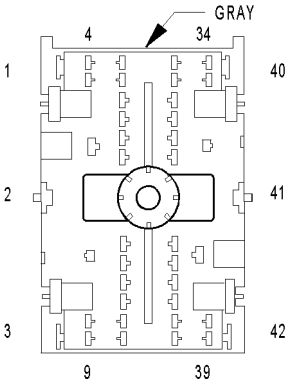

JUNCTION BLOCK C2

JUNCTION BLOCK C2 - GRAY 42 WAY

CAV	CIRCUIT	FUNCTION
1	F37 14PK/LB (MIDLINE/HIGHLINE)	FUSED B(+)
2	C15 12DB/WT	REAR WINDOW DEFOGGER RELAY OUTPUT
3	Q39 16OR/TN	REAR WINDOW DEFOGGER RELAY OUTPUT
4	F892 20PK/YL	FUSED IGNITION SWITCH OUTPUT (RUN-ACC)
5	P37 20LG/TN	DOOR LOCK SWITCH GROUND
6	P33 16TN/DB	LOCK RELAY OUTPUT
7	L77 18PK/RD	FUSED PARK LAMP RELAY OUTPUT
8	P34 16TN/LB	DRIVER DOOR UNLOCK RELAY OUTPUT
9	P35 16TN/YL	UNLOCK RELAY OUTPUT
10	P36 20TN/DB	DOOR LOCK SWITCH MUX
11	P37 20LG/TN	DOOR LOCK SWITCH GROUND
12	M20 20YL/LB	COURTESY LAMP LOAD SHED
13	L50 18WT/TN	BRAKE LAMP SWITCH OUTPUT
14	P36 20TN/DB	DOOR LOCK SWITCH MUX
15	P30 20TN/DG	TAILGATE LOCK DRIVER
16	A44 18RD/OR	FUSED B(+)
17	-	-
18	A908 18RD	FUSED B(+)
19	F22 20PK/TN	FUSED IGNITION SWITCH OUTPUT (RUN)
20	E2 20OR/BR	PANEL LAMPS DRIVER
21	E2 20OR/BR	PANEL LAMPS DRIVER
22	P31 20TN/YL	TAILGATE UNLOCK DRIVER
23	F302 20GY/PK	FUSED IGNITION SWITCH OUTPUT (RUN)
24	-	-
25	-	-
26	L78 18WT/OR	FUSED PARK LAMP RELAY OUTPUT
27	-	-
28	A913 16RD (TRAILER TOW)	FUSED B(+)
29	-	-
30	Z327 20BK/WT	GROUND
31	C16 20DB/GY	FUSED REAR WINDOW DEFOGGER RELAY OUTPUT
32	F201 20PK/OR	FUSED IGNITION SWITCH OUTPUT (RUN-START)
33	F201 20PK/OR	FUSED IGNITION SWITCH OUTPUT (RUN-START)
34	L90 16WT/OR	REAR FOG LAMP RELAY OUTPUT
35	-	-
36	-	-
37	X1 16DG/BR	ANTENNA RELAY OUTPUT
38	F942 20PK/LG	FUSED IGNITION SWITCH OUTPUT (RUN-START)
39	C16 20DB/GY	FUSED REAR WINDOW DEFOGGER RELAY OUTPUT
40	F30 14PK/YL	IGNITION SWITCH OUTPUT (RUN-ACC)
41	A305 16RD/LB	FUSED B(+)
42	A902 18RD (HEATED SEATS)	FUSED B(+)

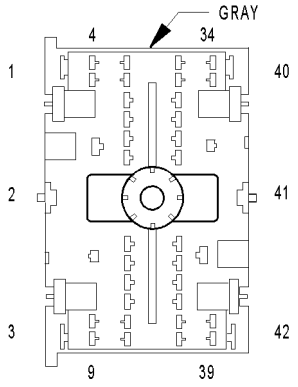

JUNCTION BLOCK C3

JUNCTION BLOCK C3 - GRAY 42 WAY

CAV	CIRCUIT	FUNCTION
1	A12 10RD/BR	FUSED B(+)
2	A912 10RD	FUSED B(+)
3	A906 12RD	FUSED B(+)
4	L44 18WT/TN	FUSED RIGHT LOW BEAM OUTPUT
5	L43 18WT/DB	FUSED LEFT LOW BEAM OUTPUT
6	-	-
7	-	-
8	F1 20PK/WT	FUSED IGNITION SWITCH OUTPUT (RUN-START)
9	A5 16RD/VT	FUSED IGNITION SWITCH OUTPUT (RUN-ACC)
10	A12 10RD/BR	FUSED B(+)
11	-	-
12	-	-
13	-	-
14	-	-
15	W6 20BR/LB	FRONT WIPER ON/OFF RELAY CONTROL
16	-	-
17	W7 16BR/GY	FRONT WIPER PARK SWITCH SENSE
18	W2 20BR/LG	FRONT WIPER HIGH/LOW RELAY CONTROL
19	F20 20PK/GY	FUSED IGNITION SWITCH OUTPUT (RUN)
20	-	-
21	-	-
22	-	-
23	-	-
24	L50 18WT/TN	BRAKE LAMP SWITCH OUTPUT
25	-	-
26	-	-
27	-	-
28	L34 18WT/GY	FUSED RIGHT HIGH BEAM OUTPUT
29	L77 18PK/RD	FUSED PARK LAMP RELAY OUTPUT
30	-	-
30	A908 20RD (EXPORT)	FUSED B(+)
31	-	-
32	C115 20DB	FUSED IGNITION SWITCH OUTPUT (RUN)
33	L89 16WT/YL	FRONT FOG LAMP RELAY OUTPUT
34	A901 10RD	FUSED B(+)
35	-	-
36	L78 18WT/OR	FUSED PARK LAMP RELAY OUTPUT
37	L33 18WT/LG	FUSED LEFT HIGH BEAM OUTPUT
38	F22 20PK/TN	FUSED IGNITION SWITCH OUTPUT (RUN)
39	X2 18DG/OR	HORN RELAY OUTPUT
40	A901 10RD	FUSED B(+)
41	A139 12RD/YL	FUSED B(+)
42	A911 10RD	FUSED B(+)

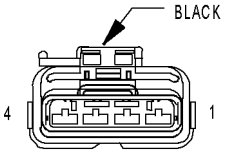

KNOCK SENSOR (3.7L)

KNOCK SENSOR (3.7L) - BLACK 4 WAY

CAV	CIRCUIT	FUNCTION
1	K942 18BR/LG	KNOCK SENSOR NO. 1 RETURN
2	K42 20BR/OR	KNOCK SENSOR NO. 1 SIGNAL
3	K924 20PK/RD	KNOCK SENSOR NO. 2 RETURN
4	K242 20BR/WT	KNOCK SENSOR NO. 2 SIGNAL

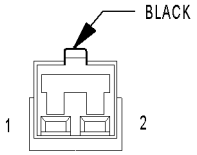

LEFT COURTESY LAMP

LEFT COURTESY LAMP - BLACK 2 WAY

CAV	CIRCUIT	FUNCTION
1	A908 18RD	FUSED B(+)
2	Z327 20BK/WT	GROUND

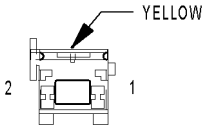

LEFT CURTAIN AIRBAG SQUIB 1

LEFT CURTAIN AIRBAG SQUIB 1 - YELLOW 2 WAY

CAV	CIRCUIT	FUNCTION
1	R1 20LB/BR	LEFT CURTAIN SQUIB 1 LINE 2
2	R3 20LB/OR	LEFT CURTAIN SQUIB 1 LINE 1

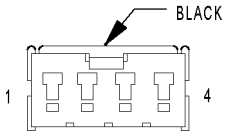

LEFT DOOR LOCK SWITCH (EXCEPT BASE)

LEFT DOOR LOCK SWITCH (EXCEPT BASE) - BLACK 4 WAY

CAV	CIRCUIT	FUNCTION
1	P36 20TN/DB	DOOR LOCK SWITCH MUX
2	Z999 20BK	GROUND
3	F98 20PK/YL	FUSED IGNITION SWITCH OUTPUT (RUN-ACC)
4	P37 20LG/TN	DOOR LOCK SWITCH GROUND

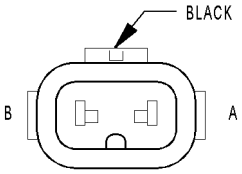

LEFT FOG LAMP

LEFT FOG LAMP - BLACK 2 WAY

CAV	CIRCUIT	FUNCTION
1	Z931 16BK	GROUND
2	L89 16WT/YL	FRONT FOG LAMP RELAY OUTPUT

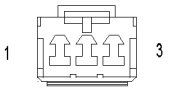

LEFT FRONT DOOR SPEAKER (BASE)

LEFT FRONT DOOR SPEAKER (BASE) - 3 WAY

CAV	CIRCUIT	FUNCTION
1	X53 18DG	LEFT FRONT SPEAKER (+)
2	-	-
3	X55 18DG/BR	LEFT FRONT SPEAKER (-)

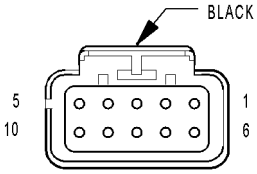

LEFT FRONT DOOR SPEAKER (PREMIUM)

LEFT FRONT DOOR SPEAKER (PREMIUM) - 10 WAY

CAV	CIRCUIT	FUNCTION
1	X53 18DG	LEFT FRONT SPEAKER (+)
2	X55 18DG/BR	LEFT FRONT SPEAKER (-)
3	Z514 16BK/LG	GROUND
4	X299 16GY/YL	AMPLIFIED HIGH LEFT FRONT SPEAKER (-)
5	X295 18GY/DG	AMPLIFIED LOW LEFT REAR SPEAKER (-)
6	X57 18DG/OR	LEFT REAR DOOR SPEAKER (-)
7	X51 18DG/DB	LEFT REAR DOOR SPEAKER (+)
8	X13 16LG/GY	RADIO CHOKE OUTPUT
9	X209 18GY/OR	AMPLIFIED HIGH LEFT FRONT SPEAKER (+)
10	X206 18DG/LG	AMPLIFIED LOW LEFT REAR SPEAKER (+)

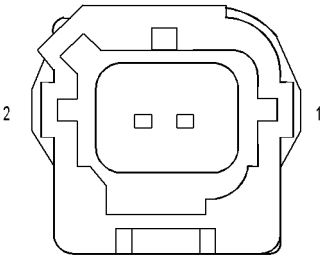

LEFT FRONT IMPACT SENSOR

LEFT FRONT IMPACT SENSOR - 2 WAY

CAV	CIRCUIT	FUNCTION
1	R81 20LB/WT	LEFT FRONT IMPACT SENSOR GROUND
2	R79 10LB/VT	LEFT FRONT IMPACT SENSOR SIGNAL

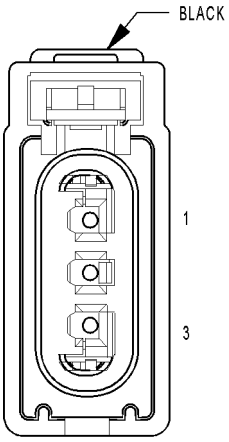

LEFT FRONT PARK/TURN SIGNAL LAMP (EXPORT)

LEFT FRONT PARK/TURN SIGNAL LAMP (EXPORT) - BLACK 3 WAY

CAV	CIRCUIT	FUNCTION
1	L63 18WT/DG	LEFT TURN SIGNAL
2	-	-
3	Z931 16BK	GROUND

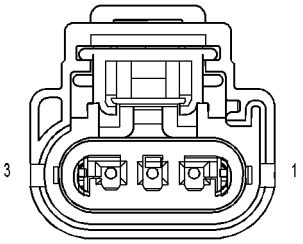

LEFT FRONT PARK/ TURN SIGNAL LAMP (EXCEPT EXPORT)

LEFT FRONT PARK/TURN SIGNAL LAMP (EXCEPT EXPORT) - 3 WAY

CAV	CIRCUIT	FUNCTION
1	L63 18WT/DG	LEFT TURN SIGNAL
2	L77 18PK/RD	FUSED PARK LAMP RELAY OUTPUT
3	-	

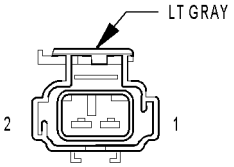

LEFT FRONT POWER WINDOW MOTOR (MIDLINE/HIGHLINE)

LEFT FRONT POWER WINDOW MOTOR (MIDLINE/HIGHLINE) - LT GRAY 2 WAY

CAV	CIRCUIT	FUNCTION
1	Q21 14OR/WT	LEFT FRONT WINDOW DRIVER DOWN
2	Q11 14OR/LG	LEFT FRONT WINDOW DRIVER UP

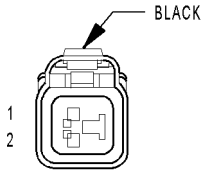

LEFT FRONT WHEEL SPEED SENSOR (ABS)

LEFT FRONT WHEEL SPEED SENSOR (ABS) - BLACK 2 WAY

CAV	CIRCUIT	FUNCTION
1	B8 18DG/TN	LEFT FRONT WHEEL SPEED SENSOR SIGNAL
2	B9 18DG/LG	LEFT FRONT WHEEL SPEED SENSOR 12 VOLT SUPPLY

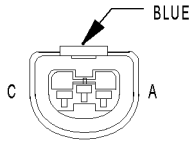

LEFT HEADLAMP (EXCEPT EXPORT)

LEFT HEADLAMP (EXCEPT EXPORT) - 3 WAY

CAV	CIRCUIT	FUNCTION
A	L43 18WT/DB	FUSED LEFT LOW BEAM OUTPUT
B	Z931 16BK	GROUND
C	L33 18WT/LG	FUSED LEFT HIGH BEAM OUTPUT

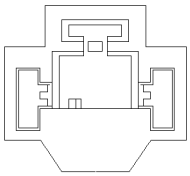

LEFT HEADLAMP (EXPORT)

LEFT HEADLAMP (EXPORT) - 3 WAY

CAV	CIRCUIT	FUNCTION
1	L33 18WT/LG	FUSED LEFT HIGH BEAM OUTPUT
2	L43 18WT/DB	FUSED LEFT LOW BEAM OUTPUT
3	Z931 16BK	GROUND

CONNECTOR NOT AVAILABLE

LEFT HEATED SEAT ASSEMBLY (HIGHLINE) - 4 WAY

CAV	CIRCUIT	FUNCTION
1	F99 16RD/WT	DRIVER HEATED SEAT FEED
2	Z849 16BK/WT	GROUND
3	P86 20PK/BK	HEATED SEAT TEMPERATURE SENSOR SIGNAL
4	P141 20TN/LB	DRIVER HEATED SEAT TEMPERATURE SENSOR GROUND

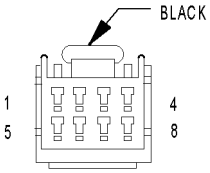

LEFT HEATED SEAT SWITCH (HIGHLINE)

LEFT HEATED SEAT SWITCH (HIGHLINE) - BLACK 8 WAY

CAV	CIRCUIT	FUNCTION
1	P137 20VT/DG	LEFT SEAT LOW HEAT LED DRIVER
2	P133 20TN/DG	LEFT SEAT HEATER SWITCH MUX
3	P139 20VT/WT	LEFT SEAT HIGH HEAT LED DRIVER
4	F302 20BR/PK	FUSED IGNITION SWITCH OUTPUT (RUN)
5	-	-
6	-	-
7	-	-
8	Z849 20BK/WT	GROUND

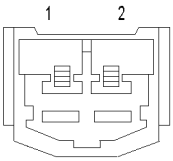

LEFT INSTRUMENT PANEL SPEAKER (PREMIUM)

LEFT INSTRUMENT PANEL SPEAKER (PREMIUM) - 2 WAY

CAV	CIRCUIT	FUNCTION
1	X209 18GY/OR	AMPLIFIED HIGH LEFT FRONT SPEAKER (+)
2	X299 18GY/YL	AMPLIFIED HIGH LEFT FRONT SPEAKER (-)

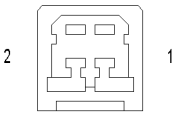

LEFT INSTRUMENT PANEL SPEAKER (BASE)

LEFT INSTRUMENT PANEL SPEAKER (BASE) - WHITE 2 WAY

CAV	CIRCUIT	FUNCTION
1	X53 18DG	LEFT FRONT SPEAKER (+)
2	X55 18DG/BR	LEFT FRONT SPEAKER (-)

CONNECTOR NOT AVAILABLE

LEFT LEVELING MOTOR (EXPORT) - BLACK 3 WAY

CAV	CIRCUIT	FUNCTION
1	Z981 16BK	GROUND
1	Z981 16BK	GROUND
1	Z981 16BK	GROUND
1	Z981 16BK	GROUND
2	L13 18WT/YL	HEADLAMP ADJUST SIGNAL
2	L13 18WT/YL	HEADLAMP ADJUST SIGNAL
2	L13 18WT/YL	HEADLAMP ADJUST SIGNAL
3	L77 18PK/RD	FUSED PARK LAMP RELAY OUTPUT

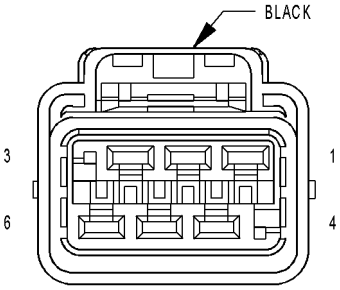

LEFT POWER SEAT MOTORS (MIDLINE/HIGHLINE)

LEFT POWER SEAT MOTORS (MIDLINE/HIGHLINE) - BLACK 6 WAY

CAV	CIRCUIT	FUNCTION
1	P11 14YL/WT	DRIVER SEAT REAR UP DRIVER
2	P13 14RD/WT	DRIVER SEAT REAR DOWN DRIVER
3	P19 14YL/LG	DRIVER SEAT FRONT UP DRIVER
4	P21 14RD/LG	DRIVER SEAT FRONT DOWN DRIVER
5	P17 14RD/LB	DRIVER SEAT HORIZONTAL REARWARD DRIVER
6	P15 14YL/LB	DRIVER SEAT HORIZONTAL FORWARD DRIVER

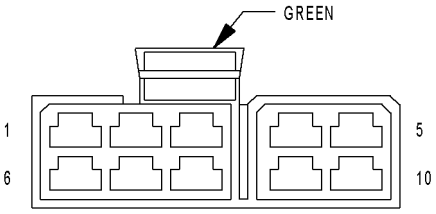

LEFT POWER SEAT SWITCH (MIDLINE/HIGHLINE)

LEFT POWER SEAT SWITCH (MIDLINE/HIGHLINE) - GREEN 10 WAY

CAV	CIRCUIT	FUNCTION
1	Z849 14BK/WT	GROUND
2	-	-
3	P15 14YL/LB	DRIVER SEAT HORIZONTAL FORWARD DRIVER
4	-	-
5	F37 14RD/LB	FUSED B(+)
6	P17 14RD/LB	DRIVER SEAT HORIZONTAL REARWARD DRIVER
7	P13 14RD/WT	DRIVER SEAT REAR DOWN DRIVER
8	P21 14RD/LG	DRIVER SEAT FRONT DOWN DRIVER
9	P19 14YL/LG	DRIVER SEAT FRONT UP DRIVER
10	P11 14YL/WT	DRIVER SEAT REAR UP DRIVER

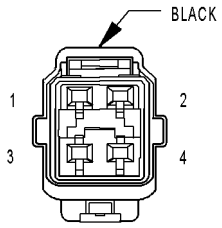

LEFT REAR DOOR LOCK MOTOR/ AJAR SWITCH (EXCEPT BASE)

LEFT REAR DOOR LOCK MOTOR/AJAR SWITCH (EXCEPT BASE) - BLACK 4 WAY

CAV	CIRCUIT	FUNCTION
1	G77 20TVT/GY	LEFT REAR DOOR AJAR SWITCH SENSE
2	Z999 20BK	GROUND
3	P35 16TN/YL	UNLOCK RELAY OUTPUT
4	P33 16TN/DB	LOCK RELAY OUTPUT

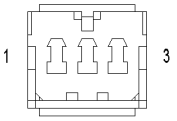

LEFT REAR DOOR SPEAKER (PREMIUM)

LEFT REAR DOOR SPEAKER (PREMIUM) - 3 WAY

CAV	CIRCUIT	FUNCTION
1	X206 18DG/LG	AMPLIFIED LOW LEFT REAR SPEAKER (+)
2	-	-
3	X20 20GY/WT	RADIO CONTROL MUX

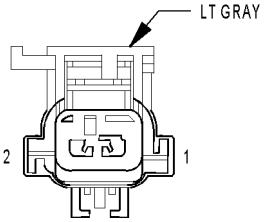

LEFT REAR POWER WINDOW MOTOR (PREMIUM)

LEFT REAR POWER WINDOW MOTOR (PREMIUM) - LT GRAY 2 WAY

CAV	CIRCUIT	FUNCTION
1	Q211 16TN/LB	LEFT REAR WINDOW DRIVER DOWN
2	Q111 16TN/YL	LEFT REAR WINDOW DRIVER UP

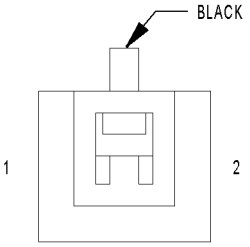

LEFT REMOTE RADIO SWITCH (PREMIUM)

LEFT REMOTE RADIO SWITCH (PREMIUM) - BLACK 2 WAY

CAV	CIRCUIT	FUNCTION
1	X920 20GY/OR	RADIO CONTROL MUX RETURN
2	X20 20GY/WT	RADIO CONTROL MUX

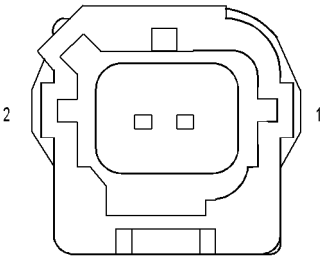

LEFT SIDE IMPACT SENSOR 1

LEFT SIDE IMPACT SENSOR 1 - 2 WAY

CAV	CIRCUIT	FUNCTION
1	R15 20LG/BR	LEFT SIDE IMPACT SENSOR 1 GROUND
2	R13 20LG/VT	LEFT SIDE IMPACT SENSOR 1 SIGNAL

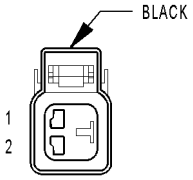

LEFT SIDE MARKER LAMP (EXCEPT EXPORT)

LEFT SIDE MARKER LAMP (EXCEPT EXPORT) - BLACK 2 WAY

CAV	CIRCUIT	FUNCTION
1	L77 18PK/RD	FUSED PARK LAMP RELAY OUTPUT
1	L77 18PK/RD	FUSED PARK LAMP RELAY OUTPUT
1	L77 18PK/RD	FUSED PARK LAMP RELAY OUTPUT
2	L63 18WT/DG	LEFT TURN SIGNAL
2	L63 18WT/DG	LEFT TURN SIGNAL
2	L63 18WT/DG	LEFT TURN SIGNAL

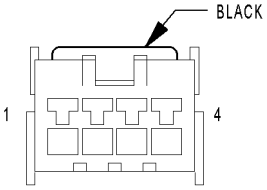

LEFT SPEED CONTROL SWITCH (EXCEPT BASE)

LEFT SPEED CONTROL SWITCH (EXCEPT BASE) - BLACK 4 WAY

CAV	CIRCUIT	FUNCTION
1	V38 20VT/OR (DIESEL)	S/C SWITCH SIGNAL NO. 2
2	K900 20DB/DG	SENSOR GROUND
3	V37 20VT	S/C SWITCH SIGNAL NO. 1
4	-	-

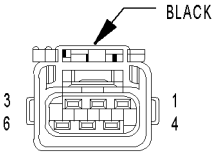

LEFT TAIL/ STOP LAMP

LEFT TAIL/STOP LAMP - BLACK 6 WAY

CAV	CIRCUIT	FUNCTION
1	L90 16WT/OR (EXPORT)	REAR FOG LAMP RELAY OUTPUT
2	L77 18PK/RD	FUSED PARK LAMP RELAY OUTPUT
3	L50 18WT/TN	BRAKE LAMP SWITCH OUTPUT
4	L10 20WT/GY	BACK-UP LAMP FEED
5	Z934 16BK	GROUND
6	L63 18WT/DG	LEFT TURN SIGNAL

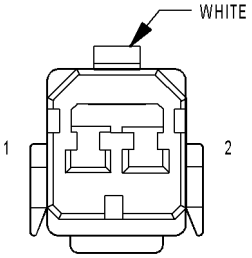

LEFT VISOR/VANITY LAMP (EXCEPT BASE)

LEFT VISOR/VANITY LAMP (EXCEPT BASE) - WHITE 2 WAY

CAV	CIRCUIT	FUNCTION
1	A908 18RD	FUSED B(+)
2	M20 20YL/LB	COURTESY LAMP LOAD SHED

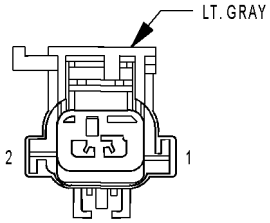

LICENSE LAMP (EXCEPT EXPORT)

LICENSE LAMP (EXCEPT EXPORT) - LT GRAY 2 WAY

CAV	CIRCUIT	FUNCTION
1	L77 18PK/RD	FUSED PARK LAMP RELAY OUTPUT
2	Z934 20BK	GROUND

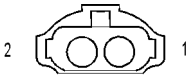

LICENSE LAMP (EXPORT)

LICENSE LAMP (EXPORT) - 2 WAY

CAV	CIRCUIT	FUNCTION
1	L77 18PK/RD	FUSED PARK LAMP RELAY OUTPUT
2	Z213 18BK/OR	GROUND

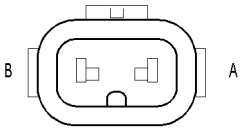

LIGHTBAR LAMP NO. 1

LIGHTBAR LAMP NO. 1 - 2 WAY

CAV	CIRCUIT	FUNCTION
1	Z946 16BK	GROUND
2	L8 14WT/DG	LIGHTBAR SWITCHED OUTPUT

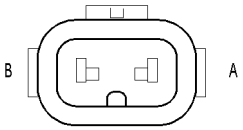

LIGHTBAR LAMP NO. 2

LIGHTBAR LAMP NO. 2 - 2 WAY

CAV	CIRCUIT	FUNCTION
1	Z946 16BK	GROUND
2	L8 14WT/DG	LIGHTBAR SWITCHED OUTPUT

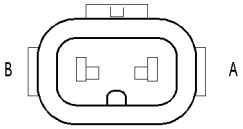

LIGHTBAR LAMP NO. 3

LIGHTBAR LAMP NO. 3 - 2 WAY

CAV	CIRCUIT	FUNCTION
1	Z946 16BK	GROUND
2	L8 14WT/DG	LIGHTBAR SWITCHED OUTPUT

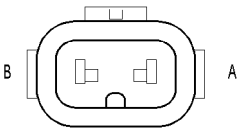

LIGHTBAR LAMP NO. 4

LIGHTBAR LAMP NO. 4 - 2 WAY

CAV	CIRCUIT	FUNCTION
1	Z946 16BK	GROUND
2	L8 14WT/DG	LIGHTBAR SWITCHED OUTPUT

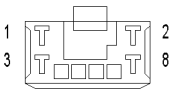

LIGHTBAR SWITCH (RENEGADE)

LIGHTBAR SWITCH (RENEGADE) - 8 WAY

CAV	CIRCUIT	FUNCTION
1	-	-
2	A904 14RD	FUSED B(+)
3	L8 14WT/DG	LIGHTBAR SWITCHED OUTPUT
4	Z940 20BK	GROUND
5	F942 20PK/LG (EXCEPT EXPORT)	FUSED IGNITION SWITCH OUTPUT (RUN-START)
5	L78 18WT/OR (EXPORT)	FUSED PARK LAMP RELAY OUTPUT
6	E2 20OR/BR	PANEL LAMPS DRIVER
7	L43 18WT/DB (EXPORT)	FUSED LEFT LOW BEAM OUTPUT
8	L18 20WT/LG	LIGHTBAR SWITCH SENSE

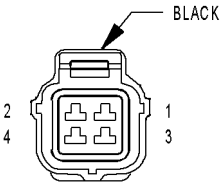

LINE PRESSURE SENSOR (2.8L 45RFE)

LINE PRESSURE SENSOR (2.8L 45RFE) - BLACK 4 WAY

CAV	CIRCUIT	FUNCTION
1	Z112 14BK	GROUND
2	T39 18GY/LB	5 VOLT SUPPLY
3	T38 18VT/TN	LINE PRESSURE SENSOR SIGNAL
4	-	-

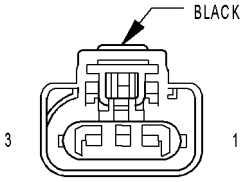

MANIFOLD ABSOLUTE PRESSURE SENSOR (GAS)

MANIFOLD ABSOLUTE PRESSURE SENSOR (GAS) - BLACK 3 WAY

CAV	CIRCUIT	FUNCTION
1	K1 20VT/BR	MAP SIGNAL
2	K900 20DB/DG	SENSOR GROUND
3	F856 20YL/PK	5 VOLT SUPPLY

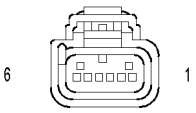

MASS AIR FLOW SENSOR (DIESEL)

MASS AIR FLOW SENSOR (DIESEL) - 6 WAY

CAV	CIRCUIT	FUNCTION
1	-	-
2	K811 20BR/OR	MASS AIR FLOW SENSOR 5 VOLT SUPPLY
3	F1 20PK/WT	FUSED IGNITION SWITCH OUTPUT (RUN-START)
4	-	-
5	K957 20BR/OR	MASS AIR FLOW SENSOR GROUND
6	K157 20BR/OR	MASS AIR FLOW 5 VOLT SUPPLY

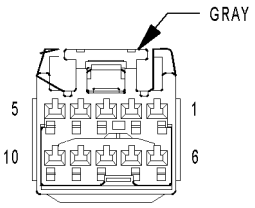

MULTI-FUNCTION SWITCH C1

MULTI-FUNCTION SWITCH C1 - GRAY 10 WAY

CAV	CIRCUIT	FUNCTION
1	E3 20OR/YL	PANEL LAMPS DIMMER SWITCH MUX
2	L87 20WT/OR (EXCEPT BASE)	FRONT FOG LAMP SWITCH SENSE
3	-	-
4	L900 20WT/YL	HEADLAMP SWITCH RETURN
5	L307 20PK/RD	HEADLAMP SWITCH MUX
6	L305 20WT/LB	LEFT TURN SWITCH SENSE
7	L309 20WT/OR	HIGH BEAM RELAY CONTROL
8	Z945 18BK	GROUND
9	L115 20WT/YL	HIGH BEAM SWITCH SENSE
10	L306 20LB/WT	RIGHT TURN SWITCH SENSE

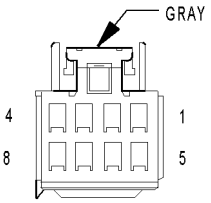

MULTI-FUNCTION SWITCH C2

MULTI-FUNCTION SWITCH C2 - GRAY 8 WAY

CAV	CIRCUIT	FUNCTION
1	W13 20BR/LG	REAR WIPER ON DRIVER
2	W27 20DB/BR	REAR WIPER INTERMITTENT DRIVER
3	W20 20BR/YL	WASHER MOTOR SENSE
4	W35 20BR/LG	FRONT WIPER SWITCH MUX
5	F943 20PK/LG	FUSED IGNITION SWITCH OUTPUT (RUN-ACC)
6	-	-
7	W33 20BR/DG	WASHER PUMP DRIVER
8	-	-

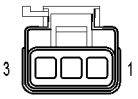

NATURAL VACUUM LEAK DETECTION PUMP (GAS)

NATURAL VACUUM LEAK DETECTION PUMP (GAS) - 3 WAY

CAV	CIRCUIT	FUNCTION
1	Z201 18BK	GROUND
2	K107 20VT/WT	NVLD SWITCH SIGNAL
3	K106 20VT/LB	NVLD SOL CONTROL

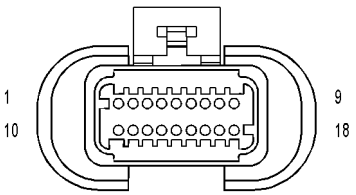

OCCUPANT CLASSIFICATION MODULE

OCCUPANT CLASSIFICATION MODULE - 18 WAY

CAV	CIRCUIT	FUNCTION
1	-	-
2	-	-
3	-	-
4	D105 20WT/OR	SEAT BELT TENSION SENSOR SIGNAL
5	Z105 18BK/LG	GROUND
6	R741 20LG/VT	PASSENGER BLADDER PRESSURE SENSOR SIGNAL
7	R740 20LG/OR	PASSENGER BLADDER PRESSURE SENSOR POWER
8	D25 20WT/VT	PCI BUS
9	F201 18LG/YL	FUSED IGNITION SWITCH OUTPUT (RUN-START)
10	-	-
11	-	-
12	-	-
13	-	-
14	R986 20LG/BR	SEAT BELT TENSION SENSOR GROUND
15	R941 20LG/DG	PASSENGER BLADDER PRESSURE SENSOR GROUND
16	R86 20LG/LB	SEAT BELT TENSION SENSOR POWER
17	-	-
18	-	-

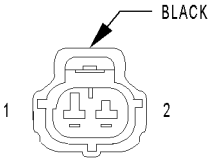

OUTPUT SPEED SENSOR (A/T)

OUTPUT SPEED SENSOR (A/T) - BLACK 2 WAY

CAV	CIRCUIT	FUNCTION
1	T14 20DG/BR	OUTPUT SPEED SENSOR SIGNAL
2	T13 20DG/VT	SPEED SENSOR GROUND

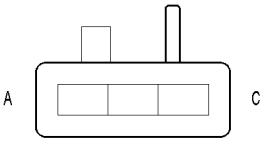

OVERHEAD MAP/ READING LAMP

OVERHEAD MAP/READING LAMP - 3 WAY

CAV	CIRCUIT	FUNCTION
A	A908 18RD	FUSED B(+)
B	Z327 20BK/WT	GROUND
C	M20 20YL/LB	COURTESY LAMP LOAD SHED

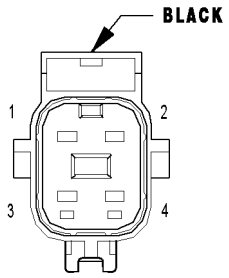

OXYGEN SENSOR 1/1 UPSTREAM (2.4L)

OXYGEN SENSOR 1/1 UPSTREAM (2.4L) - 4 WAY

CAV	CIRCUIT	FUNCTION
1	K99 18BR/TN	O2 1/1 HEATER CONTROL
2	Z42 18BK/LG	GROUND
3	K902 20BR/DG	O2 UPSTREAM RETURN
4	K41 20DB/LB	O2 1/1 SIGNAL

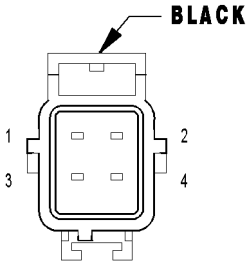

OXYGEN SENSOR 1/1 UPSTREAM (3.7L)

OXYGEN SENSOR 1/1 UPSTREAM (3.7L) - BLACK 4 WAY

CAV	CIRCUIT	FUNCTION
1	K99 18BR/TN	O2 1/1 HEATER CONTROL
2	Z42 18BK/LG	GROUND
3	K902 20BR/DG	O2 UPSTREAM RETURN
4	K41 20DB/LB	O2 1/1 SIGNAL

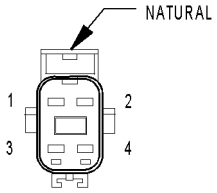

OXYGEN SENSOR 1/2 DOWNSTREAM

OXYGEN SENSOR 1/2 DOWNSTREAM - NATURAL 4 WAY

CAV	CIRCUIT	FUNCTION
1	K299 18BR/OR	O2 1/2 HEATER CONTROL
2	Z42 18BK/LG	GROUND
3	K904 20DB/DG	O2 DOWNSTREAM RETURN
4	K141 20DB/YL	O2 1/2 SIGNAL

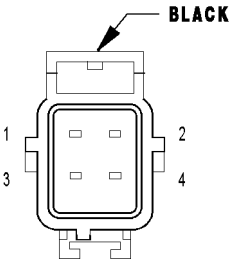

OXYGEN SENSOR 1/1 UPSTREAM (3.7L)

OXYGEN SENSOR 2/1 UPSTREAM (3.7L) - BLACK 4 WAY

CAV	CIRCUIT	FUNCTION
1	K199 18BR/VT	O2 2/1 HEATER CONTROL
2	Z42 18BK/LG	GROUND
3	K902 20BR/DG	O2 UPSTREAM RETURN
4	K43 20DB/LG	O2 2/1 SIGNAL

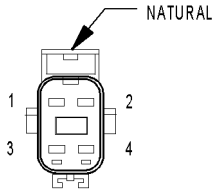

OXYGEN SENSOR 2/2 DOWNSTREAM (3.7L)

OXYGEN SENSOR 2/2 DOWNSTREAM (3.7L) - NATURAL 4 WAY

CAV	CIRCUIT	FUNCTION
1	K399 18BR/GY	O2 2/2 HEATER CONTROL
2	Z42 18BK/LG	GROUND
3	K904 20DB/DG	O2 DOWNSTREAM RETURN
4	K243 20BR	O2 2/2 SIGNAL

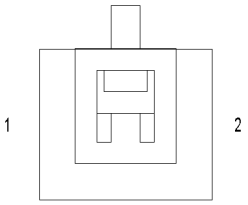

PASSENGER AIRBAG ON/OFF INDICATOR

PASSENGER AIRBAG ON/OFF INDICATOR - 2 WAY

CAV	CIRCUIT	FUNCTION
1	F942 20PK/LG	FUSED IGNITION SWITCH OUTPUT (RUN-START)
2	R166 20LG/TN	PASSENGER AIRBAG INDICATOR DRIVER

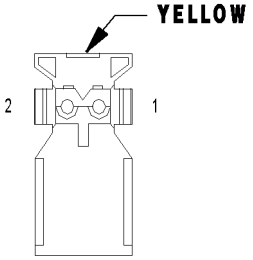

PASSENGER AIRBAG SQUIB 1

PASSENGER AIRBAG SQUIB 1 - YELLOW 2 WAY

CAV	CIRCUIT	FUNCTION
3	R42 20LB/BR	PASSENGER SQUIB 1 LINE 1
4	R44 20LB/OR	PASSENGER SQUIB 1 LINE 2

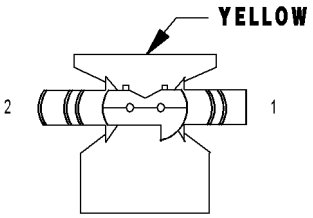

PASSENGER AIRBAG SQUIB 2

PASSENGER AIRBAG SQUIB 2 - YELLOW 2 WAY

CAV	CIRCUIT	FUNCTION
1	R62 20LB/VT	PASSENGER SQUIB 2 LINE 2
2	R64 20LB/WT	PASSENGER SQUIB 2 LINE 1

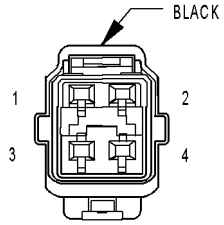

PASSENGER DOOR LOCK MOTOR/ AJAR SWITCH (EXCEPT BASE)

PASSENGER DOOR LOCK MOTOR/AJAR SWITCH (EXCEPT BASE) - 4 WAY

CAV	CIRCUIT	FUNCTION
1	G74 20VT/WT (LHD)	RIGHT FRONT DOOR AJAR SWITCH SENSE
1	G75 20VT/WT (RHD)	LEFT FRONT DOOR AJAR SWITCH SENSE
2	Z99 20BK	GROUND
3	P35 16TN/YL (LHD)	UNLOCK RELAY OUTPUT
3	P34 16TN/LB (RHD)	UNLOCK RELAY OUTPUT
4	P33 16TN/YL	LOCK RELAY OUTPUT

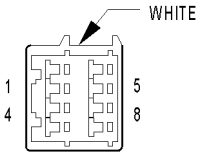

RIGHT POWER MIRROR (EXCEPT BASE)

PASSENGER POWER MIRROR (EXCEPT BASE) - WHITE 8 WAY

CAV	CIRCUIT	FUNCTION
1	P72 20TN/GY (LHD)	RIGHT MIRROR UP DRIVER
1	P71 20TN/DG (RHD)	RIGHT MIRROR UP DRIVER
2	P76 20TN/LB	MIRROR COMMON DRIVER
3	P74 20TN/OR (LHD)	RIGHT MIRROR LEFT DRIVER
3	P75 20TN/LG (RHD)	LEFT MIRROR LEFT DRIVER
4	-	-
5	C16 20DB/GY	FUSED REAR WINDOW DEFOGGER RELAY OUTPUT
6	Z998 20BK (LHD)	GROUND
6	Z99 20BK (RHD)	GROUND
7	P99 20LG/LB (RHD)	FOLDING MIRROR FEED
8	P110 20LG/WT (RHD)	FOLDING MIRROR RETURN

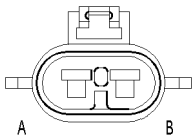

PASSENGER SEAT BELT PRETENSIONER

PASSENGER SEAT BELT PRETENSIONER - 2 WAY

CAV	CIRCUIT	FUNCTION
A	R54 20LB/YL	PASSENGER SEAT BELT TENSIONER LINE 2
B	R56 20LB/DG	PASSENGER SEAT BELT TENSIONER LINE 1

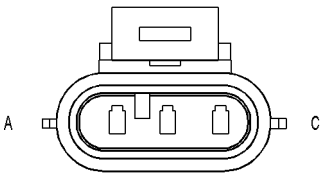

PASSENGER SEAT WEIGHT SENSOR

PASSENGER SEAT WEIGHT SENSOR - 3 WAY

CAV	CIRCUIT	FUNCTION
A	R941 20LG/DG	PASSENGER BLADDER PRESSURE SENSOR GROUND
B	R741 20LG/VT	PASSENGER BLADDER PRESSURE SENSOR SIGNAL
C	R740 20LG/OR	PASSENGER BLADDER PRESSURE SENSOR POWER

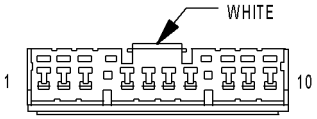

POWER MIRROR SWITCH (EXCEPT BASE)

POWER MIRROR SWITCH (EXCEPT BASE) - WHITE 10 WAY

CAV	CIRCUIT	FUNCTION
1	P75 20TN/LG	LEFT MIRROR LEFT DRIVER
2	P71 20TN/LG	LEFT MIRROR UP DRIVER
3	Z999 20BK (LHD)	GROUND
3	Z998 20BK (RHD)	GROUND
4	P110 20LG/WT (RHD)	FOLDING MIRROR RETURN
5	F302 20GY/PK	FUSED IGNITION SWITCH OUTPUT (RUN)
6	P76 20TN/LB	MIRROR COMMON DRIVER
7	P99 20LG/LB (RHD)	FOLDING MIRROR FEED
8	-	-
9	P72 20TN/GY	RIGHT MIRROR UP DRIVER
10	P74 20TN/OR	RIGHT MIRROR LEFT DRIVER

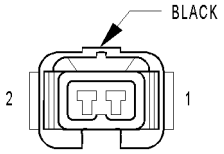

POWER STEERING PRESSURE SWITCH

POWER STEERING PRESSURE SWITCH - BLACK 2 WAY

CAV	CIRCUIT	FUNCTION
1	K66 20DB/WT	P/S PRESSURE SIGNAL
2	Z939 20BK	GROUND

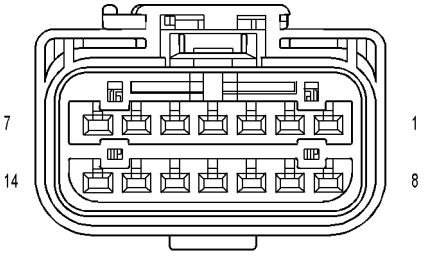

DRIVER WINDOW SWITCH

POWER WINDOW MASTER SWITCH - LT GRAY 14 WAY

CAV	CIRCUIT	FUNCTION
1	-	-
2	Q1 14OR/WT	POWER WINDOW SWITCH FEED
3	-	-
4	Q411 14OR/WT	LEFT REAR WINDOW DRIVER (UP)
5	Q611 14OR/GY	LEFT REAR WINDOW DRIVER (DOWN)
6	Q412 14OR/LB	No Function Defined
7	Q612 14 OR/DB	RIGHT REAR WINDOW DRIVER (DOWN)
8	-	-
9	Q21 14OR/WT	LEFT FRONT WINDOW DRIVER DOWN
10	F30 14PK/YL	FUSED IGNITION SWITCH OUTPUT (RUN-ACC)
11	Q11 14OR/LG	LEFT FRONT WINDOW DRIVER UP
12	Q12 14OR/BR	RIGHT FRONT WINDOW DRIVER UP
13	Z849 16BK/OR	GROUND
14	Q22 14OR/VT	RIGHT FRONT WINDOW DRIVER DOWN

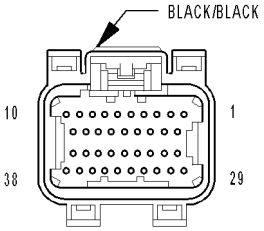

POWERTRAIN CONTROL MODULE C1

POWERTRAIN CONTROL MODULE C1 - BLACK/BLACK 38 WAY

CAV	CIRCUIT	FUNCTION
1	-	-
2	-	-
3	-	-
4	-	-
5	-	-
6	-	-
7	-	-
8	-	-
9	Z130 16BK/BR	GROUND
10	C20 20DB/YL	A/C SWITCH SENSE
11	F1 20PK/WT	FUSED IGNITION SWITCH OUTPUT (RUN-START)
12	F1 20PK/WT	FUSED IGNITION SWITCH OUTPUT (RUN-START)
13	B22 20DG/YL	VEHICLE SPEED SIGNAL
14	-	-
15	-	-
16	-	-
17	-	-
18	Z131 16BK/DG	GROUND
19	-	-
20	G6 20VT/GY	ENGINE OIL PRESSURE SIGNAL
21	C18 20LB/BR	A/C PRESSURE SIGNAL
22	G31 20VT/OR	AAT SIGNAL
23	-	-
24	-	-
25	D20 20WT/LG	SCI RECEIVE (PCM)
26	D16 20WT/OR (3.7L A/T)	SCI RECEIVE (TCM)
27	F856 20YL/PK	5 VOLT SUPPLY
28	-	-
29	A209 18RD	FUSED B(+)
30	F26 20PK/OR	FUSED IGNITION SWITCH OUTPUT (START)
31	K141 20DB/YL	O2 1/2 SIGNAL
32	K902 20BR/DG	O2 UPSTREAM RETURN
33	K243 20BR (3.7L)	O2 2/2 SIGNAL
34	-	-
35	-	-
36	D21 20WT/GY	SCI TRANSMIT (PCM)
37	D15 20BR/WT (3.7L A/T)	SCI TRANSMIT (TCM)
38	D25 18WT/VT	PCI BUS

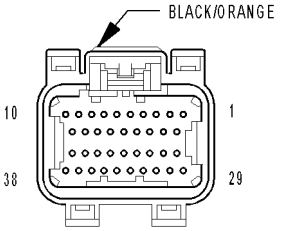

POWERTRAIN CONTROL MODULE C2

POWERTRAIN CONTROL MODULE C2 - BLACK/ORANGE 38 WAY

CAV	CIRCUIT	FUNCTION
1	K10 16DB/OR (3.7L)	COIL CONTROL NO. 6
2	K16 16DB/YL (3.7L)	COIL CONTROL NO. 5
3	K15 16DB (3.7L)	COIL CONTROL NO. 4
4	K58 16BR/VT (3.7L)	INJECTOR CONTROL NO. 6
5	K38 16BR/OR (3.7L)	INJECTOR CONTROL NO. 5
6	-	-
7	K93 16DB (3.7L)	COIL CONTROL NO. 3
8	-	-
9	K85 16DB/YL	COIL CONTROL NO. 2
10	K86 16YL/DB	COIL CONTROL NO. 1
11	K14 16BR/TN	INJECTOR CONTROL NO. 4
12	K13 16BR/LB	INJECTOR CONTROL NO. 3
13	K12 16BR/DB	INJECTOR CONTROL NO. 2
14	K11 16BR/YL	INJECTOR CONTROL NO. 1
15	-	-
16	-	-
17	K199 18BR/VT (3.7L)	O2 2/1 HEATER CONTROL
18	K99 18BR/TN	O2 1/1 HEATER CONTROL
19	K125 16BR/DG	GEN FIELD CONTROL
20	K2 20VT/OR	ECT SIGNAL
21	K22 20BR/OR	TP SIGNAL
22	-	-
23	K1 20VT/BR	MAP SIGNAL
24	K942 20BR/LG (3.7L)	KNOCK SENSOR NO. 1 RETURN
25	K42 20DB/OR (3.7L)	KNOCK SENSOR NO. 1 SIGNAL
26	K77 20BR/WT (4WD)	TRANSFER CASE POSITION SENSOR INPUT
27	K900 20DB/DG	SENSOR GROUND
28	K961 20BR/VT	IAC SIGNAL
29	F855 20PK/YL	5 VOLT SUPPLY
30	K21 20BR/WT	IAT SIGNAL
31	K41 20DB/LB	O2 1/1 SIGNAL
32	K904 20DB/DG	O2 DOWNSTREAM RETURN
33	K43 20DB/LG (3.7L)	O2 2/1 SIGNAL
34	K44 20DB/GY	CMP SIGNAL
35	K24 20BR/LB	CKP SIGNAL
36	K242 20BR/WT (3.7L)	KNOCK SENSOR NO. 2 SIGNAL
37	K924 20PK/RD (3.7L)	KNOCK SENSOR NO. 2 RETURN
38	K61 20VT/GY	IAC CONTROL

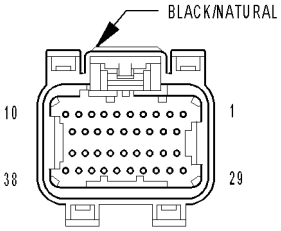

**MODULE-
POWERTRAIN
CONTROL C3
(3.7L)**

POWERTRAIN CONTROL MODULE C3 (3.7L) - BLACK/NATURAL 38 WAY

CAV	CIRCUIT	FUNCTION
1	-	-
2	-	-
3	K342 20BR/WT	ASD RELAY CONTROL
4	N112 20DB/OR	HIGH SPEED RAD FAN RELAY CONTROL
5	V35 20VT/OR (EXCEPT BASE)	S/C VENT CONTROL
6	N201 20DB/LG	LOW SPEED RAD FAN RELAY CONTROL
7	V32 20VT/YL	S/C POWER SUPPLY
8	K106 20VT/LB	NVLD SOL CONTROL
9	K299 18BR/OR	O2 1/2 HEATER CONTROL
10	K399 18BR/GY	O2 2/2 HEATER CONTROL
11	C13 20LB/OR	A/C CLUTCH RELAY CONTROL
12	V36 20VT/YL (EXCEPT BASE)	S/C VACUUM CONTROL
13	-	-
14	-	-
15	-	-
16	-	-
17	-	-
18	-	-
19	F142 16PK/GY	FUSED ASD RELAY OUTPUT
20	K52 20DB/WT	EVAP PURGE SOL CONTROL
21	T141 20YL/OR (M/T)	CLUTCH INTERLOCK SWITCH SIGNAL
22	-	-
23	B15 20DG/WT (GAS)	BRAKE SWITCH NO. 1 SIGNAL
24	-	-
25	-	-
26	-	-
27	-	-
28	F142 16PK/GY	FUSED ASD RELAY OUTPUT
29	K70 20DB/BR	EVAP PURGE SOL SIGNAL
30	K66 20DB/WT	P/S PRESSURE SIGNAL
31	-	-
32	-	-
33	N4 20DB/YL	FUEL LEVEL SIGNAL
34	V37 20VT (EXCEPT BASE)	S/C SWITCH SIGNAL NO. 1
35	K107 20VT/WT	NVLD SWITCH SIGNAL
36	-	-
37	K31 20BR	FUEL PUMP RELAY CONTROL
38	T752 20DG/OR	ENGINE STARTER MOTOR RELAY CONTROL

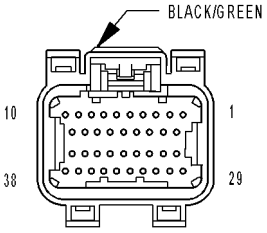

POWERTRAIN CONTROL MODULE C4 (3.7L A/T)

POWERTRAIN CONTROL MODULE C4 (3.7L A/T) - BLACK/GREEN 38 WAY

CAV	CIRCUIT	FUNCTION
1	T60 18YL/GY	OD SOLENOID CONTROL
2	T59 18YL/LB	UD SOLENOID CONTROL
3	-	-
4	-	-
5	-	-
6	T19 18YL/DB	2-4 SOLENOID CONTROL
7	-	-
8	-	-
9	-	-
10	T20 18DG/WT	L/R SOLENOID CONTROL
11	-	-
12	Z903 16BK	GROUND
13	Z903 16BK	GROUND
14	-	-
15	T1 20DG/LB	TRS T1 SENSE
16	T3 20DG/DB	TRS T3 SENSE
17	T6 20DG	TOW/HAUL OVERDRIVE OFF SWITCH SENSE
18	T515 20YL/DB	TRANSMISSION CONTROL RELAY CONTROL
19	T16 16YL/OR	TRANSMISSION CONTROL RELAY OUTPUT
20	-	-
21	-	-
22	T9 20DG/TN	OD PRESSURE SWITCH SENSE
23	-	-
24	-	-
25	-	-
26	-	-
27	T41 20YL/DB	TRS T41 SENSE (P/N)
28	T16 16YL/OR	TRANSMISSION CONTROL RELAY OUTPUT
29	T50 20YL/TN	L/R PRESSURE SWITCH SENSE
30	T47 20YL/DG	2-4 PRESSURE SWITCH SENSE
31	T38 20YL/BR	LINE PRESSURE SENSOR SIGNAL
32	T14 20DG/BR	OUTPUT SPEED SENSOR SIGNAL
33	T52 20DG/WT	INPUT SPEED SENSOR SIGNAL
34	T13 20DG/VT	SPEED SENSOR GROUND
35	T54 20DG/OR	TRANSMISSION TEMPERATURE SENSOR SIGNAL
36	-	-
37	T42 20DG/YL	TRS T42 SENSE
38	-	-

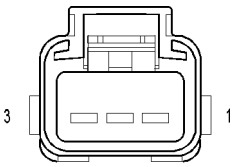

RADIATOR FAN MOTOR

RADIATOR FAN MOTOR - 3 WAY

CAV	CIRCUIT	FUNCTION
1	C23 12DG	LOW SPEED RAD FAN RELAY OUTPUT
2	Z212 12BK/OR	GROUND
3	C25 12YL	HIGH SPEED RAD FAN RELAY OUTPUT

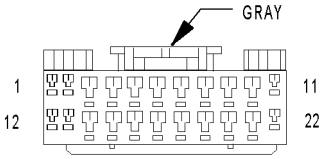

RADIO C1

RADIO C1 - 22 WAY

CAV	CIRCUIT	FUNCTION
1	A908 18RD	FUSED B(+)
2	F982 20PK/YL	FUSED IGNITION SWITCH OUTPUT (RUN-ACC)
3	E2 20OR/BR	PANEL LAMPS DRIVER
4	-	-
5	-	-
6	-	-
7	X54 18GY	RIGHT FRONT SPEAKER (+)
8	X56 18GY/BR	RIGHT FRONT SPEAKER (-)
9	X55 18DG/BR	LEFT FRONT SPEAKER (-)
10	X53 18DG	LEFT FRONT SPEAKER (+)
11	Z514 16BK/LG	GROUND
12	A908 18RD	FUSED B(+)
13	A116 20YL/RD (RADIO CHOKE)	ANTENNA RELAY OUTPUT
14	D25 20WT/VT	PCI BUS
15	-	-
16	-	-
17	-	-
18	X51 18DG/DB	LEFT REAR DOOR SPEAKER (+)
19	X57 18DG/OR	LEFT REAR DOOR SPEAKER (-)
20	X58 18GY/OR	RIGHT REAR DOOR SPEAKER (-)
21	X52 18GY/DB	RIGHT REAR DOOR SPEAKER (+)
22	Z514 16BK/LG	GROUND

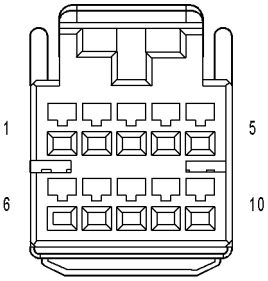

RADIO C2

RADIO C2 - 10 WAY

CAV	CIRCUIT	FUNCTION
1	X40 20GY/WT	AUDIO MUX RIGHT
2	X140 20GY/OR	SHIELD
3	X235 200GY	AUDIO RETURN
4	D25 20WT/VT	PCI BUS
5	X112 20LG/GY	IGNITION RUN/ACC SIGNAL
6	X41 20DG/WT	AUDIO MUX LEFT
7	Z515 20BK	GROUND
8	-	-
9	-	-
10	X160 20GY/YL	FUSED B(+)

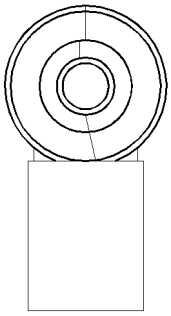

RADIO C3 (EXCEPT EXPORT)

RADIO C3 (EXCEPT EXPORT) - 2 WAY

CAV	CIRCUIT	FUNCTION
C1	D5 20WT/OR	RADIO ANTENNA CORE
C2	D931 20WT/YL	RADIO ANTENNA SHIELD

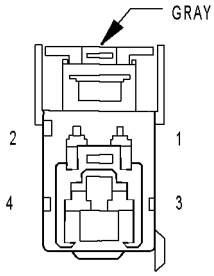

RADIO CHOKE (MIDLINE/PREMIUM)

RADIO CHOKE (MIDLINE/PREMIUM) - GRAY 4 WAY

CAV	CIRCUIT	FUNCTION
1	X1 16DG/BR	ANTENNA RELAY OUTPUT
2	X13 16LG/GY	RADIO CHOKE OUTPUT
3	A116 20YL/RD	ANTENNA RELAY OUTPUT
4	Z140 20BK/OR	GROUND

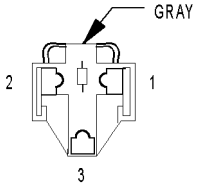

REAR POWER OUTLET

REAR POWER OUTLET - GRAY 3 WAY

CAV	CIRCUIT	FUNCTION
1	A305 16RD/LB	FUSED B(+)
2	-	-
3	Z934 16BK	GROUND

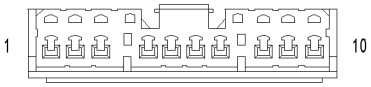

REAR POWER WINDOW SWITCH

REAR POWER WINDOW SWITCH - 10 WAY

CAV	CIRCUIT	FUNCTION
1	Q12 14OR/DB	RIGHT FRONT WINDOW DRIVER UP
2	Q112 14OR/BR	RIGHT REAR WINDOW DRIVER UP
3	Q212 14OR/VT	RIGHT REAR WINDOW DRIVER DOWN
4	Q412 14OR/LB	NO FUNCTION DEFINED
5	Q1 14OR/WT	POWER WINDOW SWITCH FEED
6	Q1 14OR/WT	POWER WINDOW SWITCH FEED
7	Q411 14OR/WT	LEFT REAR WINDOW DRIVER (UP)
8	Q211 14TN/LB	LEFT REAR WINDOW DRIVER DOWN
9	Q611 14OR/GY	LEFT REAR WINDOW DRIVER (DOWN)
10	Q111 14TN/YL	LEFT REAR WINDOW DRIVER UP

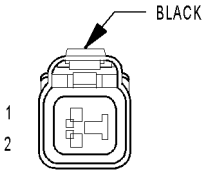

REAR WHEEL SPEED SENSOR

REAR WHEEL SPEED SENSOR - BLACK 2 WAY

CAV	CIRCUIT	FUNCTION
1	B2 20DG/LB	REAR WHEEL SPEED SENSOR 12 VOLT SUPPLY
2	B1 20DG/DB	REAR WHEEL SPEED SENSOR SIGNAL

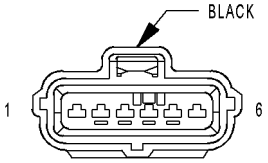

REAR WIPER MOTOR

REAR WIPER MOTOR - BLACK 6 WAY

CAV	CIRCUIT	FUNCTION
1	Z213 18BK/OR	GROUND
2	W13 20BR/LG	REAR WIPER ON DRIVER
3	G80 20VT/YL	FLIP-UP GLASS AJAR SWITCH SENSE
4	W27 20DB/BR	REAR WIPER INTERMITTENT DRIVER
5	A44 18BR/OR	FUSED B(+)
6	-	-

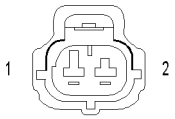

RED BRAKE WARNING INDICATOR SWITCH

RED BRAKE WARNING INDICATOR SWITCH - 2 WAY

CAV	CIRCUIT	FUNCTION
1	B20 20DG/OR	RED BRAKE WARNING INDICATOR DRIVER
2	Z932 20BK	GROUND

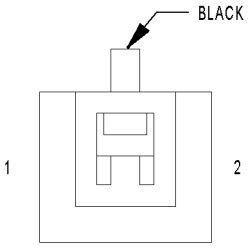

RIGHT COURTESY LAMP

RIGHT COURTESY LAMP - BLACK 2 WAY

CAV	CIRCUIT	FUNCTION
1	A908 18RD	FUSED B(+)
2	Z327 20BK/WT	GROUND

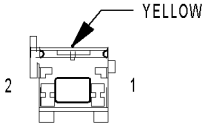

RIGHT CURTAIN AIRBAG SQUIB 1

RIGHT CURTAIN AIRBAG SQUIB 1 - YELLOW 2 WAY

CAV	CIRCUIT	FUNCTION
1	R2 20WT/LB	RIGHT CURTAIN SQUIB 1 LINE 2
2	R4 20OR/LB	RIGHT CURTAIN SQUIB 1 LINE 1

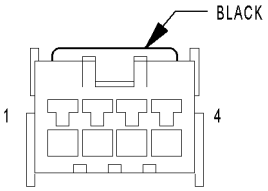

RIGHT DOOR LOCK SWITCH (EXCEPT BASE)

RIGHT DOOR LOCK SWITCH (EXCEPT BASE) - BLACK 4 WAY

CAV	CIRCUIT	FUNCTION
1	P36 20TN/DB	DOOR LOCK SWITCH MUX
2	Z998 20BK	GROUND
3	F982 20PK/YL	FUSED IGNITION SWITCH OUTPUT (RUN-ACC)
4	P37 20LG/TN	DOOR LOCK SWITCH GROUND

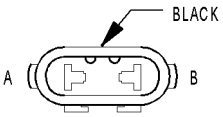

RIGHT FOG LAMP

RIGHT FOG LAMP - BLACK 2 WAY

CAV	CIRCUIT	FUNCTION
1	Z932 16BK	GROUND
1	Z932 16BK (EXPORT)	GROUND
2	L89 16WT/YL	FRONT FOG LAMP RELAY OUTPUT

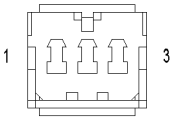

RIGHT FRONT DOOR SPEAKER (BASE)

RIGHT FRONT DOOR SPEAKER (BASE) - 3 WAY

CAV	CIRCUIT	FUNCTION
1	X54 18GY	RIGHT FRONT SPEAKER (+)
2	-	-
3	X56 18GY/BR	RIGHT FRONT SPEAKER (-)

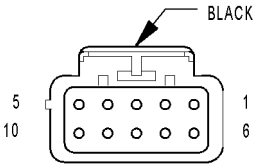

RIGHT FRONT DOOR SPEAKER (PREMIUM)

RIGHT FRONT DOOR SPEAKER (PREMIUM) - BLACK 10 WAY

CAV	CIRCUIT	FUNCTION
1	X54 18GY	RIGHT FRONT SPEAKER (+)
2	X56 18GY/BR	RIGHT FRONT SPEAKER (-)
3	Z514 16BK/LG	GROUND
4	X208 18GY/DG	AMPLIFIED HIGH RIGHT FRONT SPEAKER (-)
5	X296 18LG/GY	AMPLIFIED LOW RIGHT REAR SPEAKER (-)
6	X58 18GY/OR	RIGHT REAR DOOR SPEAKER (-)
7	X52 18GY/DB	RIGHT REAR DOOR SPEAKER (+)
8	X13 16LG/GY	RADIO CHOKE OUTPUT
9	X298 18GY/LG	AMPLIFIED HIGH RIGHT FRONT SPEAKER (+)
10	X205 18GY/LG	AMPLIFIED LOW RIGHT REAR SPEAKER (+)

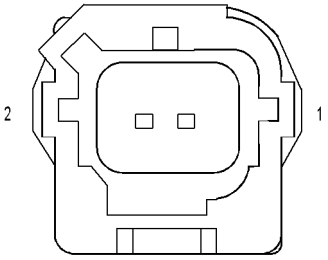

RIGHT FRONT IMPACT SENSOR

RIGHT FRONT IMPACT SENSOR - 2 WAY

CAV	CIRCUIT	FUNCTION
1	R82 20WT/LB	RIGHT FRONT IMPACT SENSOR GROUND
2	R80 20VT/LB	RIGHT FRONT IMPACT SENSOR SIGNAL

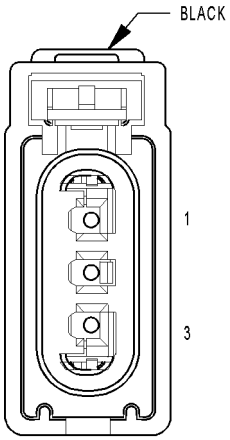

RIGHT FRONT PARK/TURN SIGNAL LAMP (EXPORT)

RIGHT FRONT PARK/TURN SIGNAL LAMP (EXPORT) - BLACK 3 WAY

CAV	CIRCUIT	FUNCTION
1	L62 18WT/OR	RIGHT TURN SIGNAL
2	-	-
3	Z932 16BK	GROUND

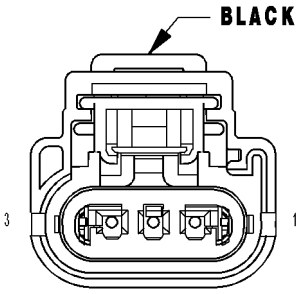

RIGHT FRONT PARK/TURN SIGNAL LAMP (EXCEPT EXPORT)

RIGHT FRONT PARK/TURN SIGNAL LAMP (EXCEPT EXPORT) - BLACK 3 WAY

CAV	CIRCUIT	FUNCTION
1	L62 18WT/OR	RIGHT TURN SIGNAL
2	L78 18WT/OR	FUSED PARK LAMP RELAY OUTPUT
3	Z932 16BK	GROUND

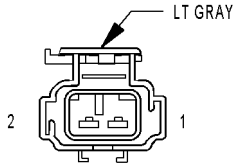

RIGHT FRONT POWER WINDOW MOTOR (MIDLINE/HIGHLINE)

RIGHT FRONT POWER WINDOW MOTOR (MIDLINE/HIGHLINE) - LT GRAY 2 WAY

CAV	CIRCUIT	FUNCTION
1	Q22 14OR/VT (LHD)	PASSENGER FRONT WINDOW DRIVER DOWN
1	Q22 14OR/VT (RHD)	DRIVER FRONT WINDOW DRIVER DOWN
2	Q12 14OR/BR (LHD)	RIGHT FRONT WINDOW DRIVER UP
2	Q12 14OR/BR (RHD)	RIGHT FRONT WINDOW DRIVER UP

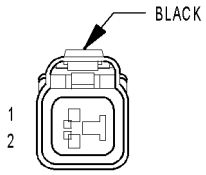

RIGHT FRONT WHEEL SPEED SENSOR (ABS)

RIGHT FRONT WHEEL SPEED SENSOR (ABS) - BLACK 2 WAY

CAV	CIRCUIT	FUNCTION
1	B6 18DG/WT	RIGHT FRONT WHEEL SPEED SENSOR SIGNAL
2	B7 18DG/VT	RIGHT FRONT WHEEL SPEED SENSOR 12 VOLT SUPPLY

RIGHT HEADLAMP (EXCEPT EXPORT)

RIGHT HEADLAMP (EXCEPT EXPORT) - 3 WAY

CAV	CIRCUIT	FUNCTION
A	L44 18WT/TN	FUSED RIGHT LOW BEAM OUTPUT
B	Z932 16BK	GROUND
C	L34 18WT/GY	FUSED RIGHT HIGH BEAM OUTPUT

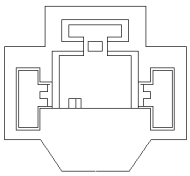

RIGHT HEADLAMP (EXPORT)

RIGHT HEADLAMP (EXPORT) - 3 WAY

CAV	CIRCUIT	FUNCTION
1	L34 18WT/GY	FUSED RIGHT HIGH BEAM OUTPUT
2	L44 18WT/TN	FUSED RIGHT LOW BEAM OUTPUT
3	Z932 16BK	GROUND

CONNECTOR NOT AVAILABLE

RIGHT HEATED SEAT ASSEMBLY (HIGHLINE) - 4 WAY

CAV	CIRCUIT	FUNCTION
1	F98 16RD/WT	PASSENGER HEATED SEAT FEED
2	Z849 16BK/WT	GROUND
3	P86 20PK/BK	HEATED SEAT TEMPERATURE SENSOR SIGNAL
4	P142 20TN/DB	PASSENGER HEATED SEAT TEMPERATURE SENSOR GROUND

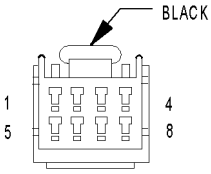

RIGHT HEATED SEAT SWITCH (HIGHLINE)

RIGHT HEATED SEAT SWITCH (HIGHLINE) - BLACK 8 WAY

CAV	CIRCUIT	FUNCTION
1	P82 20VT/LG	RIGHT SEAT LOW HEAT LED DRIVER
2	P134 20TN/LG	RIGHT SEAT HEATER SWITCH MUX
3	P84 20VT/BK	RIGHT SEAT HIGH HEAT LED DRIVER
4	F302 20BR/PK	FUSED IGNITION SWITCH OUTPUT (RUN)
5	-	-
6	-	-
7	-	-
8	Z849 20BK/TN	GROUND

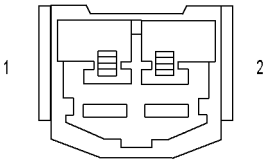

RIGHT INSTRUMENT PANEL SPEAKER (PREMIUM)

RIGHT INSTRUMENT PANEL SPEAKER (PREMIUM) - 2 WAY

CAV	CIRCUIT	FUNCTION
1	X298 18GY/LG	AMPLIFIED HIGH RIGHT FRONT SPEAKER (+)
2	X208 18GY/DG	AMPLIFIED HIGH RIGHT FRONT SPEAKER (-)

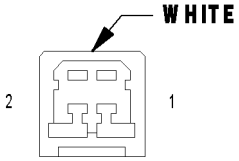

RIGHT INSTRUMENT PANEL SPEAKER (BASE)

RIGHT INSTRUMENT PANEL SPEAKER (BASE) - WHITE 2 WAY

CAV	CIRCUIT	FUNCTION
1	X54 18GY	RIGHT FRONT SPEAKER (+)
2	X56 18GY/BR	RIGHT FRONT SPEAKER (-)

CONNECTOR NOT AVAILABLE

RIGHT LEVELING MOTOR (EXPORT) - BLACK 3 WAY

CAV	CIRCUIT	FUNCTION
1	Z932 16BK	GROUND
1	Z932 16BK	GROUND
1	Z932 16BK	GROUND
1	Z932 16BK	GROUND
2	L13 18WT/YL	HEADLAMP ADJUST SIGNAL
3	L78 18WT/OR	FUSED PARK LAMP RELAY OUTPUT
3	L78 18WT/OR	FUSED PARK LAMP RELAY OUTPUT
3	L78 18WT/OR	FUSED PARK LAMP RELAY OUTPUT

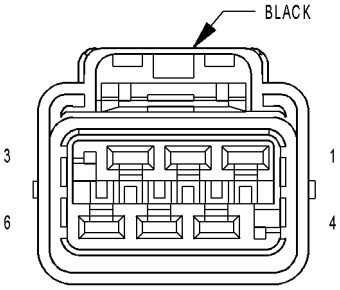

RIGHT POWER SEAT MOTORS (MIDLINE/HIGHLINE)

RIGHT POWER SEAT MOTORS (MIDLINE/HIGHLINE) - BLACK 6 WAY

CAV	CIRCUIT	FUNCTION
1	P10 14YL/WT	PASSENGER SEAT REAR UP DRIVER
2	P12 14RD/WT	PASSENGER SEAT REAR DOWN DRIVER
3	P18 14YL/LG	PASSENGER SEAT FRONT UP DRIVER
4	P20 14RD/LG	PASSENGER SEAT FRONT DOWN DRIVER
5	P16 14RD/LB	PASSENGER SEAT HORIZONTAL REARWARD DRIVER
6	P14 14YL/LB	PASSENGER SEAT HORIZONTAL FORWARD DRIVER

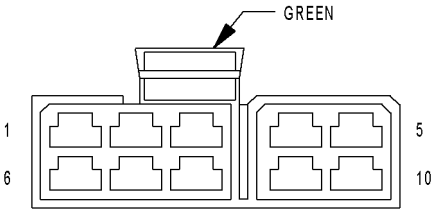

RIGHT POWER SEAT SWITCH (MIDLINE/HIGHLINE)

RIGHT POWER SEAT SWITCH (MIDLINE/HIGHLINE) - GREEN 10 WAY

CAV	CIRCUIT	FUNCTION
1	Z849 16BK/OR	GROUND
2	-	-
3	P14 14YL/LB	PASSENGER SEAT HORIZONTAL FORWARD DRIVER
4	-	-
5	F37 14RD/LB	FUSED B(+)
6	P16 14RD/LB	PASSENGER SEAT HORIZONTAL REARWARD DRIVER
7	P10 14YL/WT	PASSENGER SEAT REAR UP DRIVER
8	P18 14YL/LG	PASSENGER SEAT FRONT UP DRIVER
9	P20 14RD/LG	PASSENGER SEAT FRONT DOWN DRIVER
10	P12 14RD/WT	PASSENGER SEAT REAR DOWN DRIVER

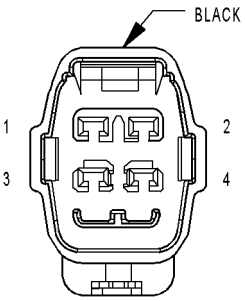

RIGHT REAR DOOR LOCK MOTOR/AJAR SWITCH (EXCEPT BASE)

RIGHT REAR DOOR LOCK MOTOR/AJAR SWITCH (EXCEPT BASE) - BLACK 4 WAY

CAV	CIRCUIT	FUNCTION
1	G76 20VT/YL	RIGHT REAR DOOR AJAR SWITCH SENSE
2	Z998 20BK	GROUND
3	P35 16TN/YL	UNLOCK RELAY OUTPUT
4	P33 16TN/DB	LOCK RELAY OUTPUT

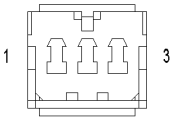

RIGHT REAR DOOR SPEAKER (PREMIUM)

RIGHT REAR DOOR SPEAKER (PREMIUM) - 3 WAY

CAV	CIRCUIT	FUNCTION
1	X205 18GY/LG	AMPLIFIED LOW RIGHT REAR SPEAKER (+)
2	-	-
3	X296 18LG/GY	AMPLIFIED LOW RIGHT REAR SPEAKER (-)

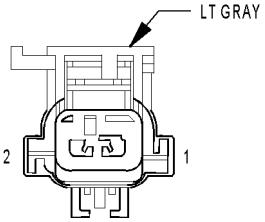

RIGHT REAR POWER WINDOW MOTOR (PREMIUM)

RIGHT REAR POWER WINDOW MOTOR (PREMIUM) - LT GRAY 2 WAY

CAV	CIRCUIT	FUNCTION
1	Q212 16OR/VT	RIGHT REAR WINDOW DRIVER DOWN
2	Q112 16OR/BR	RIGHT REAR WINDOW DRIVER UP

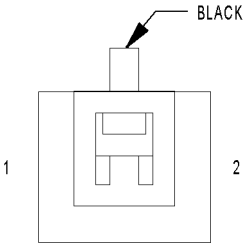

RIGHT REMOTE RADIO SWITCH (PREMIUM)

RIGHT REMOTE RADIO SWITCH (PREMIUM) - BLACK 2 WAY

CAV	CIRCUIT	FUNCTION
1	X920 20GY/OR	RADIO CONTROL MUX RETURN
2	X20 20GY/WT	RADIO CONTROL MUX

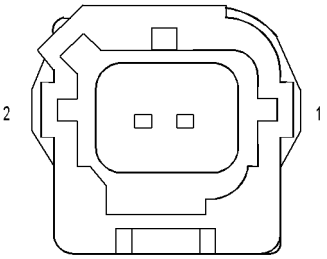

RIGHT SIDE IMPACT SENSOR 1

RIGHT SIDE IMPACT SENSOR 1 - 2 WAY

CAV	CIRCUIT	FUNCTION
1	R16 20BR/LG	RIGHT SIDE IMPACT SENSOR 1 GROUND
2	R14 20TN/LG	RIGHT SIDE IMPACT SENSOR 1 SIGNAL

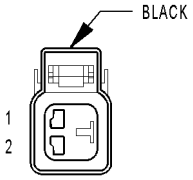

RIGHT SIDE MARKER LAMP (EXCEPT EXPORT)

RIGHT SIDE MARKER LAMP (EXCEPT EXPORT) - BLACK 2 WAY

CAV	CIRCUIT	FUNCTION
1	L78 18WT/OR	FUSED PARK LAMP RELAY OUTPUT
1	L78 18WT/OR	FUSED PARK LAMP RELAY OUTPUT
1	L78 18WT/OR	FUSED PARK LAMP RELAY OUTPUT
2	L62 18WT/OR	RIGHT TURN SIGNAL
2	L62 18WT/OR	RIGHT TURN SIGNAL
2	L62 18WT/OR	RIGHT TURN SIGNAL

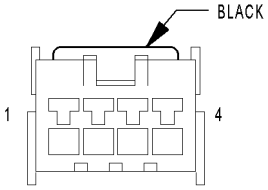

RIGHT SPEED CONTROL SWITCH (EXCEPT BASE)

RIGHT SPEED CONTROL SWITCH (EXCEPT BASE) - BLACK 4 WAY

CAV	CIRCUIT	FUNCTION
1	V38 20VT/OR (DIESEL)	S/C SWITCH SIGNAL NO. 2
2	K900 20DB/DG	SENSOR GROUND
3	V37 20VT	S/C SWITCH SIGNAL NO. 1
4	-	-

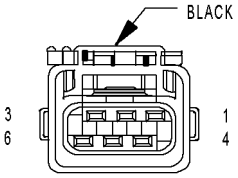

RIGHT TAIL/ STOP LAMP

RIGHT TAIL/STOP LAMP - BLACK 6 WAY

CAV	CIRCUIT	FUNCTION
1	L90 16WT/OR (EXPORT)	REAR FOG LAMP RELAY OUTPUT
2	L78 18WT/OR	FUSED PARK LAMP RELAY OUTPUT
3	L50 18WT/TN	BRAKE LAMP SWITCH OUTPUT
4	L10 20WT/GY	BACK-UP LAMP FEED
5	Z934 16BK	GROUND
6	L62 18WT/OR	RIGHT TURN SIGNAL

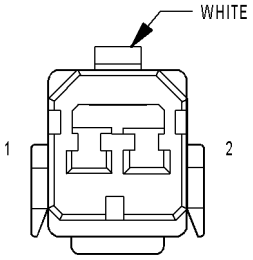

RIGHT VISOR/VANITY LAMP (EXCEPT BASE)

RIGHT VISOR/VANITY LAMP (EXCEPT BASE) - 2 WAY

CAV	CIRCUIT	FUNCTION
1	A908 18RD	FUSED B(+)
2	M20 20YL/LB	COURTESY LAMP LOAD SHED

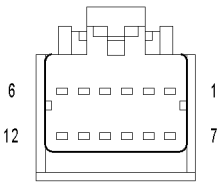

SATELLITE RECEIVER

SATELLITE RECEIVER - 12 WAY

CAV	CIRCUIT	FUNCTION
1	X41 20DG/WT	AUDIO MUX LEFT
2	-	-
3	-	-
4	Z515 20BK	GROUND
5	X112 20LG/GY	IGNITION RUN/ACC SIGNAL
6	X160 20GY/YL	FUSED B(+)
7	X40 20GY/WT	AUDIO MUX RIGHT
8	X140 20GY/OR	SHIELD
9	-	-
10	-	-
11	X235 20GY	AUDIO RETURN
12	D25 20WT/VT	PCI BUS

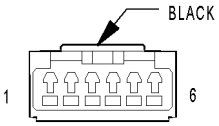

SENTRY KEY IMMOBILIZER MODULE (EXCEPT BASE)

SENTRY KEY IMMOBILIZER MODULE (EXCEPT BASE) - BLACK 6 WAY

CAV	CIRCUIT	FUNCTION
1	D508 20WT/GY	COM - LIN TIRE PRESSURE MONITOR LAN
2	D25 20WT/VT	PCI BUS
3	-	-
4	A942 20PK/LG	FUSED IGNITION SWITCH OUTPUT (RUN-START)
5	Z120 20BK/WT	GROUND
6	A333 20WT/RD	FUSED B(+)

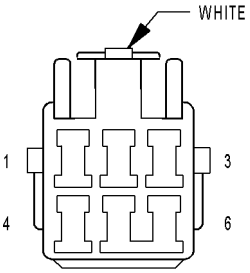

SHIFTER ASSEMBLY

SHIFTER ASSEMBLY - WHITE 6 WAY

CAV	CIRCUIT	FUNCTION
1	E2 20OR/BR	PANEL LAMPS DRIVER
2	Z936 20BK	GROUND
3	T6 20DG	TOW/HAUL OVERDRIVE OFF SWITCH SENSE
4	Z936 20BK	GROUND
5	F22 20PK/TN	FUSED IGNITION SWITCH OUTPUT (RUN)
6	B15 20DG/WT (DIESEL)	SECONDARY BRAKE SWITCH SIGNAL
6	B15 20DG/WT (GAS)	BRAKE SWITCH NO. 1 SIGNAL

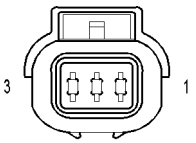

SIREN (EXPORT)

SIREN (EXPORT) - 3 WAY

CAV	CIRCUIT	FUNCTION
1	Z932 20BK	GROUND
2	X75 18GY/DG	SIREN SIGNAL CONTROL
3	A908 20RD	FUSED B(+)

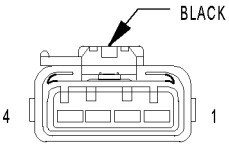

SPEED CONTROL SERVO

SPEED CONTROL SERVO - BLACK 4 WAY

CAV	CIRCUIT	FUNCTION
1	V36 18TN/RD	S/C VACUUM CONTROL
2	V35 18LG/RD	S/C VENT CONTROL
3	V30 18DB/RD	S/C BRAKE SWITCH OUTPUT
4	Z212 18BK/OR	GROUND

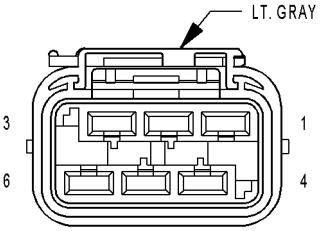

SUNROOF MOTOR

SUNROOF MOTOR - LT GRAY 6 WAY

CAV	CIRCUIT	FUNCTION
1	Q39 16RD	REAR WINDOW DEFOGGER RELAY OUTPUT
2	Z111 16BK/WT	GROUND
3	Q644 20OR/YL	SUNROOF SWITCH GROUND
4	Q43 20OR/LB	SUNROOF VENT
5	Q5 20OR/LB	SUNROOF CLOSE
6	Q3 20OR/TN	SUNROOF OPEN

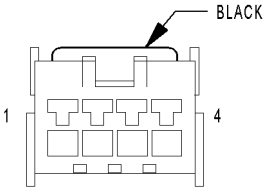

SUNROOF SWITCH

SUNROOF SWITCH - BLACK 4 WAY

CAV	CIRCUIT	FUNCTION
1	Q3 20OR/TN	SUNROOF OPEN
2	Q5 20OR/LB	SUNROOF CLOSE
3	Q43 20OR/LB	SUNROOF VENT
4	Q644 20OR/YL	SUNROOF SWITCH GROUND

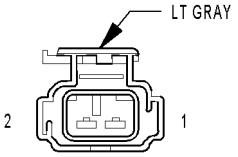

TAILGATE CYLINDER LOCK SWITCH

TAILGATE CYLINDER LOCK SWITCH - LT GRAY 2 WAY

CAV	CIRCUIT	FUNCTION
1	G910 20VT/BR	TAILGATE SWITCH GROUND
2	G71 20VT/OR	TAILGATE CYLINDER LOCK SWITCH MUX

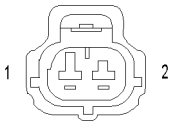

TAILGATE FLIP-UP AJAR SWITCH

TAILGATE FLIP-UP AJAR SWITCH - 2 WAY

CAV	CIRCUIT	FUNCTION
1	G80 20VT/YL	FLIP-UP GLASS AJAR SWITCH SENSE
2	Z213 18BK/OR	GROUND

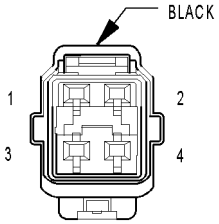

TAILGATE LOCK MOTOR/ AJAR SWITCH

TAILGATE LOCK MOTOR/AJAR SWITCH - BLACK 4 WAY

CAV	CIRCUIT	FUNCTION
1	G78 20VT/OR	TAILGATE AJAR SWITCH SENSE
2	G910 20VT/BR	TAILGATE SWITCH GROUND
3	P31 20TN/YL	TAILGATE UNLOCK DRIVER
4	P30 20TN/DG	TAILGATE LOCK DRIVER

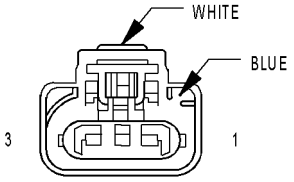

THROTTLE POSITION SENSOR (GAS)

THROTTLE POSITION SENSOR (GAS) - WHITE/BLUE 3 WAY

CAV	CIRCUIT	FUNCTION
1	F855 20PK/YL	5 VOLT SUPPLY
2	K900 20DB/DG	SENSOR GROUND
3	K22 20BR/OR	TP SIGNAL

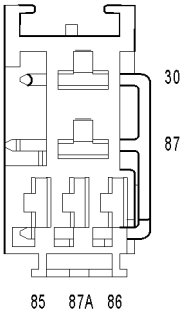

TRAILER TOW BRAKE LAMP RELAY

TRAILER TOW BRAKE LAMP RELAY - 5 WAY

CAV	CIRCUIT	FUNCTION
30	A913 16RD	FUSED B(+)
85	Z933 14BK	GROUND
86	L50 18WT/TN	BRAKE LAMP SWITCH OUTPUT
87	L651 16WT/LG	TRAILER TOW BRAKE LAMP RELAY OUTPUT
87A	L76 16PK/RD	TRAILER TOW BRAKE LAMP RELAY OUTPUT

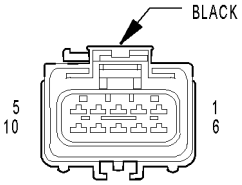

TRAILER TOW CONNECTOR

TRAILER TOW CONNECTOR - BLACK 10 WAY

CAV	CIRCUIT	FUNCTION
1	-	-
2	L674 16LG	RIGHT TURN SIGNAL
3	L10 20WT/GY	BACK-UP LAMP FEED
4	A917 14RD	TRAILER TOW RELAY OUTPUT
5	L78 18WT/OR	FUSED PARK LAMP RELAY OUTPUT
6	-	-
7	A206 14RD	TRAILER TOW BRAKE B(+)
8	Z933 14BK	GROUND
9	Z933 14BK	GROUND
10	L73 16YL	LEFT TURN SIGNAL

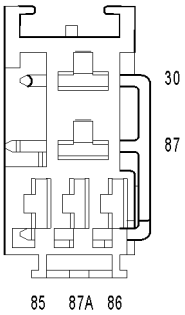

TRAILER TOW LEFT TURN RELAY

TRAILER TOW LEFT TURN RELAY

CAV	CIRCUIT	FUNCTION
30	L673 16YL	LEFT TURN SIGNAL
85	Z993 14BK	GROUND
86	L63 18WT/DG	LEFT TURN SIGNAL
87	L76 16PK/RD	TRAILER TOW BRAKE LAMP RELAY OUTPUT
87	L76 16PK/RD	TRAILER TOW BRAKE LAMP RELAY OUTPUT
87A	L651 16WT/LG	TRAILER TOW BRAKE LAMP RELAY OUTPUT

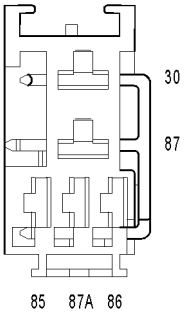

TRAILER TOW RELAY

TRAILER TOW RELAY

CAV	CIRCUIT	FUNCTION
30	A100 14RD/VT	FUSED B(+)
85	Z933 14BK	GROUND
86	F302 20GY/PK	FUSED IGNITION SWITCH OUTPUT (RUN)
87	A917 14RD	TRAILER TOW RELAY OUTPUT
87A	-	-

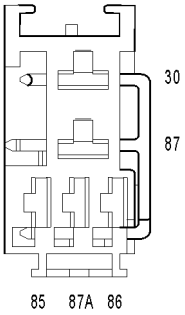

TRAILER TOW RIGHT TURN RELAY

TRAILER TOW RIGHT TURN RELAY - 5 WAY

CAV	CIRCUIT	FUNCTION
30	L674 16LG	RIGHT TURN SIGNAL
85	Z933 14BK	GROUND
86	L62 18WT/OR	RIGHT TURN SIGNAL
87	L76 16PK/RD	TRAILER TOW BRAKE LAMP RELAY OUTPUT
87A	L651 16WT/LG	TRAILER TOW BRAKE LAMP RELAY OUTPUT

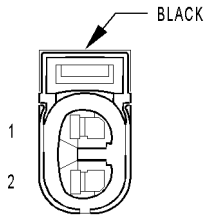

TRANSFER CASE POSITION SENSOR

TRANSFER CASE POSITION SENSOR - BLACK 2 WAY

CAV	CIRCUIT	FUNCTION
1	K77 20BR/WT	TRANSFER CASE POSITION SENSOR INPUT
2	K900 20DB/DG	SENSOR GROUND

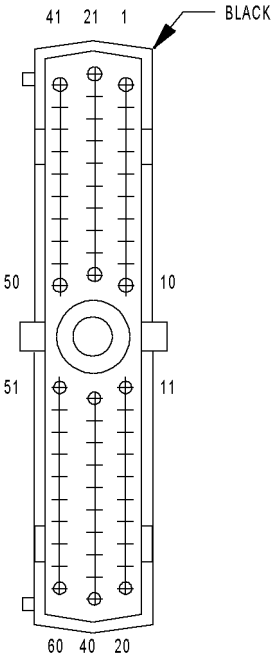

TRANSMISSION CONTROL MODULE (2.8L)

TRANSMISSION CONTROL MODULE (2.8L) - BLACK 60 WAY

CAV	CIRCUIT	FUNCTION
1	T1 20DG/LB	TRS T1 SENSE
2	T4 20DG/LB	TRS T2 SENSE
3	T3 20DG/DB	TRS T3 SENSE
4	-	-
5	-	-
6	K244 20BR/WT	ENGINE RPM SIGNAL
7	D21 20WT/GY	SCI TRANSMIT (ECM)
8	F26 20PK/OR	FUSED IGNITION SWITCH OUTPUT (START)
9	T9 20DG/TN	OD PRESSURE SWITCH SENSE
10	T10 20DG/LG	TORQUE MANAGEMENT REQUEST SENSE
11	F1 20PK/WT	FUSED IGNITION SWITCH OUTPUT (RUN-START)
12	K23 20BR/WT	ACCELERATOR PEDAL POSITION SENSOR SIGNAL 1
13	T13 20DG/VT	SPEED SENSOR GROUND
14	T14 20DG/BR	OUTPUT SPEED SENSOR SIGNAL
15	T515 20YL/DB	TRANSMISSION CONTROL RELAY CONTROL
16	T16 16YL/OR	TRANSMISSION CONTROL RELAY OUTPUT
17	T16 16YL/OR	TRANSMISSION CONTROL RELAY OUTPUT
18	T118 20DG	PRESSURE CONTROL SOLENOID CONTROL
19	T219 20YL/LG	2C SOLENOID CONTROL
20	T20 18DG/WT	L/R SOLENOID CONTROL
21	-	-
22	-	-
23	-	-
24	-	-
25	-	-
26	-	-
27	-	-
28	-	-
29	T29 20YL/WT	UD PRESSURE SWITCH SENSE
30	T38 20YL/BR	LINE PRESSURE SENSOR SIGNAL
31	-	-
32	-	-
33	-	-
34	-	-
35	-	-
36	T16 16YL/OR	TRANSMISSION CONTROL RELAY OUTPUT
37	Z133 16BK/LG	GROUND
38	T39 20BR/YL	5 VOLT SUPPLY
39	Z133 16BK/LG	GROUND
40	T140 18VT/LG	MS SOLENOID CONTROL
41	T41 20YL/DB	TRS T41 SENSE (P/N)
42	T42 20DG/YL	TRS T42 SENSE
43	D25 20WT/VT	PCI BUS
44	-	-
45	-	-
46	D16 20WT/OR	SCI RECEIVE (ECM)
47	T147 20DG/YL	2C PRESSURE SWITCH SENSE
48	T48 20BR/YL	4C PRESSURE SWITCH SENSE
49	T6 20DG	TOW/HAUL OVERDRIVE OFF SWITCH SENSE
50	T50 20YL/TN	L/R PRESSURE SWITCH SENSE
51	K167 20BR/YL	ACCELERATOR PEDAL POSITION SENSOR GROUND 1
52	T52 20DG/WT	INPUT SPEED SENSOR SIGNAL
53	Z133 16BK/LG	GROUND
54	T54 20DG/OR	TRANSMISSION TEMPERATURE SENSOR SIGNAL
55	T59 18YL/LB	UD SOLENOID CONTROL
56	A903 16RD	FUSED B(+)
57	Z133 16BK/LG	GROUND
58	-	-
59	T159 20YL/DG	4C SOLENOID CONTROL
60	T60 18YL/GY	OD SOLENOID CONTROL

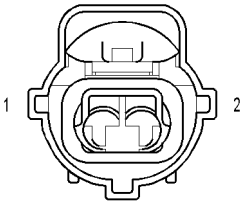

TRANSMISSION RANGE SENSOR (42RLE)

TRANSMISSION RANGE SENSOR (42RLE) - 10 WAY

CAV	CIRCUIT	FUNCTION
1	C115 20DB	FUSED IGNITION SWITCH OUTPUT (RUN)
2	-	-
3	T13 20DG/VT	SPEED SENSOR GROUND
4	T54 20DG/OR	TRANSMISSION TEMPERATURE SENSOR SIGNAL
5	-	-
6	L10 20WT/GY	BACK-UP LAMP FEED
7	T1 20DG/LB	TRS T1 SENSE
8	T3 20DG/DB	TRS T3 SENSE
9	T42 20DG/YL	TRS T42 SENSE
10	T41 20YL/DB	TRS T41 SENSE (P/N)

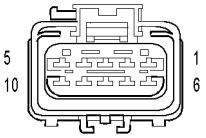

TRANSMISSION SOLENOID/ PRESSURE SWITCH ASSEMBLY (42RLE)

TRANSMISSION SOLENOID/PRESSURE SWITCH ASSEMBLY (42RLE) - 10 WAY

CAV	CIRCUIT	FUNCTION
1	T60 18YL/GY	OD SOLENOID CONTROL
2	T59 18YL/LB	UD SOLENOID CONTROL
3	T16 16YL/OR	TRANSMISSION CONTROL RELAY OUTPUT
4	T19 18YL/DB	2-4 SOLENOID CONTROL
5	T47 20YL/DG	2-4 PRESSURE SWITCH SENSE
6	T9 20DG/TN	OD PRESSURE SWITCH SENSE
7	T20 18DG/WT	L/R SOLENOID CONTROL
8	-	-
9	-	-
10	T50 20YL/TN	L/R PRESSURE SWITCH SENSE

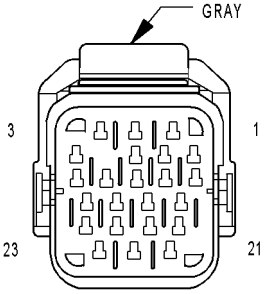

TRANSMISSION SOLENOID/TRS ASSEMBLY (2.8L 45RFE)

TRANSMISSION SOLENOID/TRS ASSEMBLY (2.8L 45RFE) - GRAY 23 WAY

CAV	CIRCUIT	FUNCTION
1	C115 20DB	FUSED IGNITION SWITCH OUTPUT (RUN)
2	T20 18DG/WT	L/R SOLENOID CONTROL
3	T41 20YL/DB	PARK/NEUTRAL POSITION SWITCH SENSE
4	T41 20YL/DB	TRS T41 SENSE (P/N)
5	T42 20DG/YL	TRS T42 SENSE
6	L10 20WT/GY	BACK-UP LAMP FEED
7	T60 18YL/GY	OD SOLENOID CONTROL
8	T3 20DG/DB	TRS T3 SENSE
9	T1 20DG/LB	TRS T1 SENSE
10	T16 16YL/OR	TRANSMISSION CONTROL RELAY OUTPUT
11	T48 20BR/YL	4C PRESSURE SWITCH SENSE
12	T118 20DG	PRESSURE CONTROL SOLENOID CONTROL
13	T4 20DG/LB	TRS T2 SENSE
14	T50 20YL/TN	L/R PRESSURE SWITCH SENSE
15	T147 20DG/YL	2C PRESSURE SWITCH SENSE
16	T9 20DG/TN	OD PRESSURE SWITCH SENSE
17	T59 18YL/LB	UD SOLENOID CONTROL
18	T29 20YL/WT	UD PRESSURE SWITCH SENSE
19	T159 20YL/DG	4C SOLENOID CONTROL
20	T219 20YL/LG	2C SOLENOID CONTROL
21	T140 20YL/GY	MS SOLENOID CONTROL
22	T13 20DG/VT	SPEED SENSOR GROUND
23	T54 20DG/OR	TRANSMISSION TEMPERATURE SENSOR SIGNAL

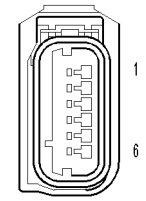

TRANSPONDER-TIRE PRESSURE-LEFT FRONT (EXCEPT 2.5L)

TRANSPONDER-TIRE PRESSURE-LEFT FRONT (EXCEPT 2.5L) - 6 WAY

CAV	CIRCUIT	FUNCTION
1	F22 20PK/TN	FUSED IGNITION SWITCH OUTPUT (RUN)
2	D508 20WT/GY	COM - LIN TIRE PRESSURE MONITOR LAN
3	Z384 20BK	GROUND
4	Z384 20BK	GROUND
5	-	
6	-	

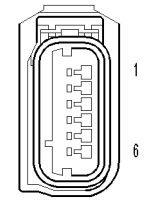

TRANSPONDER-TIRE PRESSURE-RIGHT FRONT (EXCEPT 2.5L)

TRANSPONDER-TIRE PRESSURE-RIGHT FRONT (EXCEPT 2.5L) - 6 WAY

CAV	CIRCUIT	FUNCTION
1	F22 20PK/TN	FUSED IGNITION SWITCH OUTPUT (RUN)
2	D508 20WT/GY	COM - LIN TIRE PRESSURE MONITOR LAN
3	Z384 20BK	GROUND
4	-	
5	Z384 20BK	GROUND
6	-	

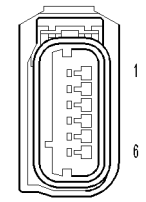

TRANSPONDER-TIRE PRESSURE-RIGHT REAR (EXCEPT 2.5L)

TRANSPONDER-TIRE PRESSURE-RIGHT REAR (EXCEPT 2.5L) - 6 WAY

CAV	CIRCUIT	FUNCTION
1	F22 20PK/TN	FUSED IGNITION SWITCH OUTPUT (RUN)
2	F508 20WT/GY	COM - LIN TIRE PRESSURE MONITOR LAN
3	Z912 18BK	GROUND
4	-	
5	-	
6	Z912 18BK	GROUND

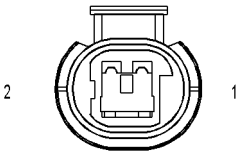

VACUUM RESERVOIR SOLENOID (DIESEL)

VACUUM RESERVOIR SOLENOID (DIESEL) - 2 WAY

CAV	CIRCUIT	FUNCTION
1	K347 20BR/PK	FUSED ASD RELAY OUTPUT
2	N117 20DB/WT	VACUUM RESERVOIR SOLENOID CONTROL

CONNECTOR NOT AVAILABLE

VARIABLE LINE PRESSURE SENSOR (3.7L) - 6 WAY

CAV	CIRCUIT	FUNCTION
1	-	-
2	F856 20YL/PK	5 VOLT SUPPLY
3	T38 20YL/BR	LINE PRESSURE SENSOR SIGNAL
4	K900 20DB/DG	SENSOR GROUND
5	T16 18YL/OR	TRANSMISSION CONTROL RELAY OUTPUT
6	T140 20YL/GY	MS SOLENOID CONTROL

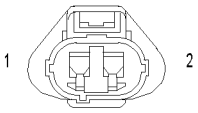

WASHER FLUID LEVEL SWITCH

WASHER FLUID LEVEL SWITCH - 2 WAY

CAV	CIRCUIT	FUNCTION
1	W1 20BR/TN	LOW WASHER FLUID SENSE
2	Z931 20BK	GROUND

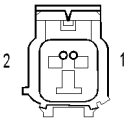

WASHER PUMP

WASHER PUMP - 2 WAY

CAV	CIRCUIT	FUNCTION
1	W20 20BR/YL	WASHER MOTOR SENSE
2	W33 20BR/DG	WASHER PUMP DRIVER

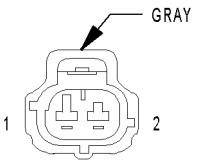

WATER IN FUEL SENSOR (DIESEL)

WATER IN FUEL SENSOR (DIESEL) - GRAY 2 WAY

CAV	CIRCUIT	FUNCTION
1	K303 20BR/OR	WATER IN FUEL SENSOR SIGNAL
2	K300 20BR	SENSOR GROUND

8W-91 CONNECTOR/GROUND/SPLICE LOCATION

TABLE OF CONTENTS

page

CONNECTOR/GROUND/SPLICE LOCATION
DESCRIPTION 1

CONNECTOR/GROUND/SPLICE LOCATION

DESCRIPTION

This section provides illustrations identifying connector, ground, and splice locations in the vehicle. Connector, ground, and splice indexes are provided. Use the wiring diagrams in each section for connector, ground, and splice identification. Refer to the appropriate index for the proper figure number. For items that are not shown in this section N/S is placed in the Fig. column.

CONNECTORS

CONNECTOR NAME/NUMBER	COLOR	LOCATION	FIG.
A/C Compressor Clutch	BK	At A/C Compressor	2, 21
A/C Heater Control C1	BK	Center of Dash, Behind A/C-Heater Controls	N/S
A/C Heater Control C2	WT	Center of Dash, Behind A/C-Heater Controls	N/S
A/C High Pressure Switch (Diesel)	GY	Left Front Side of Engine Compartment	21
A/C Low Pressure Switch (RHD)	GY	Left Rear Side of Engine Compartment	35
A/C Low Pressure Switch (LHD)	GY	Right Rear Side of Engine Compartment	26
A/C Pressure Transducer (2.4L)	BK	Front Side of Engine	12, 15
A/C Pressure Transducer (3.7L)	BK	Front Side of Engine	2
Accelerator Pedal Position Sensor (Diesel)	BK	At Base of Pedal	NS
Airbag Control Module C1 (ORC C1)	YL	Under Center Console	39, 43
Airbag Control Module C2 (ORC C2)	BK	Under Center Console	42, 46
Ambient Temperature Sensor	BK	Front of Engine Compartment	N/S
Antenna Module C1 (Export)		Above Right Quarter Window	53
Antenna Module C2 (Export)		Above Right Quarter Window	N/S
Automatic Day/Night Mirror C1		Top Center Windshield	N/S
Automatic Day/Night Mirror C2 (Hands Free)		Top Center Windshield	N/S
Back-Up Lamp Switch (2.4L)	BK	Right Side of Transmission	12
Back-Up Lamp Switch (M/T) (3.7L) (Diesel)	BK	Left Side of Transmission	7, 23

CONNECTOR/GROUND/SPLICE LOCATION (Continued)

CONNECTOR NAME/NUMBER	COLOR	LOCATION	FIG.
Battery (Positive)		Left Front Engine Compartment	32, 33
Battery (Negative)		Left Front Engine Compartment	32, 33
Blend Door Actuator	BK	Behind Right Side of Instrument Panel	N/S
Blower Motor	BK	Behind Right Side of Instrument Panel	N/S
Blower Motor Resistor Block	BK	Behind Right Side of Instrument Panel	N/S
Body Control Module C1	GY	Under Left Side of Instrument Panel	N/S
Body Control Module C2	GY	Under Left Side of Instrument Panel	N/S
Body Control Module JB		Under Left Side of Instrument Panel	N/S
Boost Pressure Sensor (Diesel)		Left Side of Engine	23
Boost Pressure Solenoid		Right Rear Engine Compartment	27
Brake Lamp Switch	BK	At Brake Pedal	N/S
C100	GY	Left Kick Panel	36, 39, 43
C101 (2.4L)	BK	Left Side of Engine Compartment	11, 12
C102 (RHD)		Left Kick Panel	36
C104	BK	Right Rear Side of Engine Compartment	8, , 10, 13, 14, 16, , 19
C105	GY	Right Rear Side of Engine Compartment	8, , 10, 13, 14, 16, , 19
C106	BK	Left Front Side of Engine Compartment	31
C107	BK	Left Front Side of Engine Compartment	31
C108 (Gas)	GY	Left Front Side of Engine	32, 34
C109		Right Front Engine Compartment	30
C110 (2.4L)	BK	Left Side of Engine	11, 12
C111 (Diesel)	LG	Right Rear Side of Engine Compartment	19
C112 (Gas)	BK	Right Side of Engine Compartment	8, 9, , 13, 14, 35
C113 (Diesel)	LG	Left Rear Side of Engine Compartment	N/S
C114		Left Front Engine Compartment	33
C117 (Diesel)-(Injector Side)		Right Rear Engine Compartment	19

CONNECTOR/GROUND/SPLICE LOCATION (Continued)

CONNECTOR NAME/NUMBER	COLOR	LOCATION	FIG.
C201	BK	Behind Center of Instrument Panel	N/S
C203		Left A-Pillar	38
C300 (LHD)	OR	Left A-Pillar	41, 47
C300 (RHD)	OR	Right A-Pillar	45, 47
C301 (LHD)	OR	Left A-Pillar	41, 47
C301 (RHD)	OR	Right A-Pillar	45, 47
C302 (LHD)	OR	Right A-Pillar	40, 47, 48
C302 (RHD)	OR	Left A-Pillar	44, 47
C303 (LHD)	OR	Right A-Pillar	40, 47, 48
C303 (RHD)	OR	Left A-Pillar	44, 47
C304	DB	Right Mid B-Pillar	40, 45, 48
C305	DB	Left Mid B-Pillar	41, 44, 48
C306 (LHD)	WT	Left Lower B-Pillar	41, 49
C307 (LHD)	LG	Left Lower B-Pillar	41, 44
C308	LG	Left Rear Quarter Panel	49
C309	DB	Left Rear Quarter Panel	49, 54
C310	LG	Right Rear Quarter Panel	50, 53, 55
C311	LG	Left Front Seat	41, 44
C312 (Highline)	LG	Left Front Seat	41, 44
C313	LG	Right Front Seat	42, 45, 46
C314	LG	Right Front Seat	42, 45, 46
C315 (Midline/Highline) (LHD)	LG	Right Front Seat	40
C315 (Midline/Highline) (RHD)	LG	Left Front Seat	44
C318		Front of Roof in Light Bar Harness	38, 57
C328 (Overhead Side)		Left Rear Headliner	49
C330 (Rear Fascia Side)		Right Rear Body	53
Cabin Heater (Diesel)	BK	Right Front Side of Engine	22
Camshaft Position Sensor (2.4L)	BK	Top of Engine	N/S
Camshaft Position Sensor (3.7L)	LG	Right Side of Engine	4
Camshaft Position Sensor (Diesel)		Top of Engine	23
Cargo Lamp	BK	Center Rear Headliner	N/S
CD Changer	GN	Right Rear Body	50
Center High Mounted Stop Lamp	WT	At Lamp	54
Cigar Lighter	RD	Behind Cigar Lighter	N/S
Clockspring C1	WT	Behind Steering Wheel	37
Clockspring C2	YL	Behind Steering Wheel	N/S
Clockspring C3	BK	At Steering Wheel	N/S
Clutch Interlock Switch (LHD)	BK	Left Rear Side of Engine Compartment	35
Clutch Interlock Switch (RHD)	BK	Right Rear Side of Engine Compartment	28

CONNECTOR/GROUND/SPLICE LOCATION (Continued)

CONNECTOR NAME/NUMBER	COLOR	LOCATION	FIG.
Coil On Plug No.1 (3.7L)	BK	Left Side of Engine Near Fuel Injector No.1	1
Coil On Plug No.2 (3.7L)	BK	Right Side of Engine Near Fuel Injector No.2	2
Coil On Plug No.3 (3.7L)	BK	Left Side of Engine Near Fuel Injector No.3	1
Coil On Plug No.4 (3.7L)	BK	Right Side of Engine Near Fuel Injector No.4	2
Coil On Plug No.5 (3.7L)	BK	Left Side of Engine Near Fuel Injector No.5	1
Coil On Plug No.6 (3.7L)	BK	Right Side of Engine Near Fuel Injector No.6	2
Coil Rail (2.4L)	BK	Right Side of Engine	11, 12
Compass Mini-Trip Computer	BK	At Overhead Console	N/S
Controller Antilock Brake	BK	Left Side of Engine Compartment	34
Crankshaft Position Sensor (2.4L)	BK	Top of Engine	11
Crankshaft Position Sensor (3.7L)	BK	Right Lower Side of Engine	4
Crankshaft Position Sensor (Diesel)	BK	Right Rear Side of Engine	17, 24
Data Link Connector	BK	Under Center of Instrument Panel	N/S
Dome Lamp (Base)		Front Center Headliner	N/S
Driver Airbag Squib 1	GY	In Steering Wheel	37
Driver Airbag Squib 2	BK	In Steering Wheel	37
Driver Door Lock Motor/Ajar Switch (Except Base)	BK	In Driver Door	47
Driver Power Mirror	WT	In Left Front Door	47
Driver Seat Belt Switch	LG	At Drive Seat	N/S
Driver Seat Belt Tensioner (LHD)	YL	Lower Left B-Pillar	41
Driver Seat Belt Tensioner (RHD)	YL	Lower Right B-Pillar	45
EGR Air Flow Control Valve (Diesel) - 4 Way		Left Rear Engine	21
EGR Solenoid		Right Rear Side of Engine Compartment	29
Engine Control Module C1	BK	Left Rear Side of Engine Compartment	20
Engine Control Module C2	BK	Left Rear Side of Engine Compartment	20
Engine Coolant Level Sensor (Diesel)	LG	Rear Side of Engine Compartment	19
Engine Coolant Temperature Sensor (Diesel)	BK	Left Side of Engine	22
Engine Coolant Temperature Sensor (Gas)	BK	Front Side of Engine	2
Engine Oil Pressure Switch (2.4L)	BK	Top of Engine	N/S
Engine Oil Pressure Switch (3.7L)	BK	Left Front Side of Engine	3

CONNECTOR/GROUND/SPLICE LOCATION (Continued)

CONNECTOR NAME/NUMBER	COLOR	LOCATION	FIG.
Engine Oil Pressure Sensor (Diesel)	BK	Right Rear Side of Engine	18, 24
Engine Starter Motor		Right Front Side of Engine	21
Evap/Purge Solenoid	BK	At Solenoid	N/S
Flip-Up Glass Release Motor	BK	In Tailgate	54
Flip-Up Glass Release Switch	WT	In Tailgate	54
Front Reading Lamp		At Overhead Console	N/S
Front Wiper Motor (LHD)	BK	Left Side of Cowl	26
Front Wiper Motor (RHD)	BK	Right Side of Cowl	26
Fuel Heater (Diesel)	BK	Left Rear Side of Engine Compartment	20
Fuel Injector No.1 (Diesel)	BK	At Fuel Injector	25
Fuel Injector No.1 (Gas)	BK	At Fuel Injector	1
Fuel Injector No.2 (Diesel)	BK	At Fuel Injector	25
Fuel Injector No.2 (Gas)	BK	At Fuel Injector	2
Fuel Injector No.3 (Diesel)	BK	At Fuel Injector	25
Fuel Injector No.3 (Gas)	BK	At Fuel Injector	1
Fuel Injector No.4 (Diesel)	BK	At Fuel Injector	23
Fuel Injector No.4 (Gas)	BK	At Fuel Injector	2
Fuel Injector No.5 (3.7L)	BK	At Fuel Injector	1
Fuel Injector No.6 (3.7L)	BK	At Fuel Injector	2
Fuel Pressure Sensor (Diesel)		Left Side of Engine	23
Fuel Pressure Solenoid (Diesel)	BK	Left Side of Engine	21
Fuel Pump Module	LG	At Fuel Tank	N/S
Fuel Quality Solenoid (Diesel)		Top of Engine	23
Fuel Temperature Sensor (Diesel)		Center Rear of Engine Compartment	20
Gateway Module		Left Front Engine Compartment	31
Generator	BK	Left Front Side of Engine	21, 32, 33
Glow Plug Module (Diesel)		Top of Engine	N/S
Hands Free Module C1		Right Rear Side of Cargo Area	51
Hands Free Module C2 (Satellite)		Right Rear Side of Cargo Area	51
Hands Free Module C3		Right Rear Side of Cargo Area	51
Hazard Switch/Combination Flasher	WT	Steering Column	N/S
Headlamp Leveling Switch (Export)	BK	Center of Instrument Panel	N/S
Heated Seat Module (Highline)	GN	At Left Seat	N/S
High Note Horn	BK	Left Front Side of Engine Compartment	31
Hood Ajar Switch		Right Side of Engine Compartment	27
Horn Switch		Steering Wheel	37

CONNECTOR/GROUND/SPLICE LOCATION (Continued)

CONNECTOR NAME/NUMBER	COLOR	LOCATION	FIG.
Idle Air Control Motor	BK	On Throttle Body	1
Ignition Switch		At Steering Column	N/S
Input Speed Sensor	BK	Left Side of Transmission	5, 24
Instrument Cluster	BK	Rear of Cluster	N/S
Intake Air Temperature Sensor	GY	Left Side of Intake Manifold	1
Intake Pressure Sensor (Diesel) 3 Way		Left Rear Engine	22
Intrusion Transceiver Module (Export)	BK	Overhead Console	N/S
Junction Block Body Control Module - JB		Under Left Side of Instrument Panel	N/S
Junction Block C1	GY	Under Left Side of Instrument Panel	N/S
Junction Block C2	GN	Under Left Side of Instrument Panel	N/S
Junction Block C3	LB	Under Left Side of Instrument Panel	N/S
Knock Sensor (3.7L)	BK	Near Fuel Injector No.5	1
Left Courtesy Lamp	BK	Left Side of Instrument Panel	N/S
Left Curtain Airbag Squib 1	YL	Left Mid B-Pillar	41, 44
Left Cylinder Lock Switch	LG	In Left Front Door	47
Left Door Lock Switch	BK	In Left Front Door	47
Left Fog Lamp	BK	Left Side of Front Bumper	N/S
Left Front Door Speaker	BK	Behind Left Front Door Panel	47
Left Front Impact Sensor	BK	Front Side of Engine Compartment	30, 31
Left Front Park/Turn Signal Lamp	BK	Behind Left Turn Signal Lamp	N/S
Left Front Power Window Motor	LG	In Left Front Door	47
Left Front Wheel Speed Sensor	BK	Left Side of Engine Compartment	34
Left Headlamp (Export)		Behind Left Headlamp	N/S
Left Headlamp (Except Export)	DB	Behind Left Headlamp	N/S
Left Heated Seat Assembly	LG	At Left Seat	N/S
Left Heated Seat Switch	BK	At Left Seat	N/S
Left Instrument Panel Speaker	BK	Left Side of Instrument Panel	39, 43
Left Leveling Motor (Export)	BK	At Left Headlamp	N/S
Left Position Lamp (Export)	BK	Left Front Side of Vehicle	N/S
Driver Power Mirror	WT	In Left Front Door	47
Left Power Seat Motors	BK	At Left Seat	N/S
Left Power Seat Switch	GN	At Left Seat	N/S
Left Rear Door Lock Motor/Ajar Switch (Except Base)	BK	In Left Rear Door	48
Left Rear Door Speaker		In Left Rear Door	48
Left Rear Power Window Motor	LG	In Left Rear Door	48

CONNECTOR/GROUND/SPLICE LOCATION (Continued)

CONNECTOR NAME/NUMBER	COLOR	LOCATION	FIG.
Left Remote Radio Switch	BK	On Steering Wheel	N/S
Left Side Impact Sensor 1	YL	Left B-Pillar	41, 44
Left Side Marker Lamp	BK	Left Front Fender	N/S
Left Side Repeater Lamp (Export)	BK	Left Front Fender	N/S
Left Speed Control Switch	BK	On Steering Wheel	37
Left Tail/Stop Lamp	BK	Left Rear Quarter Panel	53
Left Visor/Vanity Lamp	WT	Left Front of Headliner	N/S
License Lamp (Export)	LG	In Tailgate	54
License Lamp (Except Export)	LG	On Bumper	49
Lightbar Lamp No.1		Front of Roof in Light Bar Harness	57
Lightbar Lamp No.2		Front of Roof in Light Bar Harness	57
Lightbar Lamp No.3		Front of Roof in Light Bar Harness	57
Lightbar Lamp No. 4		Front of Roof in Light Bar Harness	57
Lightbar Switch		Near Instrument Cluster	N/S
Line Pressure Sensor (Diesel)	BK	Right Side of Transmission	24
Low Note Horn	BK	Left Front Side of Engine Compartment	31
Manifold Absolute Pressure Sensor	BK	Front Side of Engine	2
Mass Air Flow Sensor (Diesel)		Top of Engine	22
Multi-Function Switch C1	GY	At Steering Column	N/S
Multi-Function Switch C2	GY	At Steering Column	N/S
Natural Vacuum Leak Detection Assembly	BK	Near Fuel Tank	N/S
Output Speed Sensor	BK	Left Side of Transmission	5, 24
Overhead Map/Courtesy Lamp	BK	Overhead Console	N/S
Oxygen Sensor 1/1 Upstream (2.4L)	BK	Right Side of Engine	12
Oxygen Sensor 1/1 Upstream (3.7L)	BK	Lower Left Side of Engine	5, 7
Oxygen Sensor 1/2 Downstream (2.4L)	NAT	Right Side of Transmission	11, 12
Oxygen Sensor 1/2 Downstream (3.7L)	NAT	Left Side of Transmission	5
Oxygen Sensor 2/1 Upstream (3.7L)	BK	Lower Right Side of Engine	6
Oxygen Sensor 2/2 Downstream (3.7L)	NAT	Right Side of Transmission	6
Park Brake Switch	BK	Center Console	42, 46
Passenger Airbag Squib 1	YL	Passenger Side Instrument Panel	N/S
Passenger Airbag Squib 2	YL	Passenger Side Instrument Panel	N/S
Passenger Airbag On/Off Indicator		Near Passenger Airbag	N/S

CONNECTOR/GROUND/SPLICE LOCATION (Continued)

CONNECTOR NAME/NUMBER	COLOR	LOCATION	FIG.
Passenger Door Lock Motor/Ajar Switch (Except Base)	BK	In Passenger Door	47
Passenger Power Mirror	WT	Right Front Door	47
Passenger Seat Belt Switch	LG	At Passenger Seat	N/S
Passenger Seat Belt Tensioner		Base of Right B- Pillar	40
Power Distribution Center		Left Engine Compartment	31
Power Mirror Switch	WT	In Left Front Door	47
Power Steering Pressure Switch	BK	Left Front Side of Engine	3, 15
Power Window Master Switch	LG	Center Console	42, 46
Powertrain Control Module C1 (2.4L)	BK	At Powertrain Control Module	13, 14
Powertrain Control Module C1 (3.7L)	BK	At Powertrain Control Module	8, 9
Powertrain Control Module C2	WT	At Powertrain Control Module	8, 9, 13, 14
Powertrain Control Module C3	GY	At Powertrain Control Module	9, 35
Powertrain Control Module C4	GN	At Powertrain Control Module	8, 9
Radiator Fan Motor	BK	Right Front Side of Engine Compartment	30
Radio C1	GY	Rear of Radio	N/S
Radio C2		Rear of Radio	N/S
Radio C3		Rear of Radio	N/S
Radio Choke	GY	Center of Instrument Panel	N/S
Rear Map/Reading Lamp	BK	Overhead Console	N/S
Rear Power Outlet	RD	Right Rear Quarter Panel	53, 56
Rear Power Window Switch	WT	Center Console	42, 46
Rear Wheel Speed Sensor	BK	On Rear Axle	N/S
Rear Window Defogger	BK	At Rear Window	54
Rear Wiper Motor	BK	In Tailgate	54
Red Brake Warning Indicator Switch (LHD)	GY	Left Rear Side of Engine Compartment	35
Red Brake Warning Indicator Switch (RHD)	GY	Right Rear Side of Engine Compartment	28
Right Courtesy Lamp	BK	Right Side of Instrument Panel	N/S
Right Curtain Airbag Squib 1	YL	Right Mid B-Pillar	40, 45
Right Door Lock Switch (Except Base)	BK	In Right Front Door	47
Right Fog Lamp	BK	Right Side of Bumper	N/S
Right Front Door Ajar Switch (Base)	BK	In Right Front Door	N/S
Right Front Door Speaker	BK	In Right Front Door	47
Right Front Impact Sensor	BK	Right Front Side of Engine Compartment	30
Right Front Park/Turn Signal Lamp	BK	At Lamp	N/S
Right Front Power Window Motor	LG	In Right Front Door	47
Right Front Wheel Speed Sensor	BK	Right Rear Lower Side of Engine Compartment	27

CONNECTOR/GROUND/SPLICE LOCATION (Continued)

CONNECTOR NAME/NUMBER	COLOR	LOCATION	FIG.
Right Headlamp (Export)		Right Front Side of Engine Compartment	N/S
Right Headlamp (Except Export)	DB	Right Front Side of Engine Compartment	N/S
Right Heated Seat Assembly	LG	At Right Seat	N/S
Right Heated Seat Switch	BK	At Right Seat	N/S
Right Instrument Panel Speaker	WT	Right Side of Instrument Panel	39, 43
Right Leveling Motor (Export)	BK	At Right Headlamp	N/S
Right Position Lamp (Export)	BK	Right Front Corner of Vehicle	N/S
Right Power Seat Motors	BK	At Right Seat	N/S
Right Power Seat Switch	GN	At Right Seat	N/S
Right Rear Door Lock Motor/Ajar Switch (Except Base)	BK	In Right Rear Door	48
Right Rear Door Speaker		At Speaker	48
Right Rear Power Window Motor	LG	In Right Rear Door	48
Right Remote Radio Switch	BK	On Steering Wheel	N/S
Right Side Impact Sensor 1	YL	Right B-Pillar	40, 45
Right Side Marker Lamp	BK	Right Front Fender	N/S
Right Side Repeater Lamp (Export)	BK	Right Front Fender	N/S
Right Speed Control Switch	WT	On Steering Wheel	37
Right Tail/Stop Lamp	BK	Right Rear Quarter Panel	53
Right Visor/Vanity Lamp	WT	On Visor	N/S
Satellite Antenna No.1		Center Rear Roof	52
Satellite Antenna No.2		Center Rear Roof	52
Satellite Receiver		Right Rear Side of Cargo Area	51
Satellite Receiver-Antenna No.1		Right Rear Cargo Area	51
Satellite Receiver-Antenna No.2		Right Rear Cargo Area	51
Sentry Key Immobilizer Module	BK	Under Left Side of Instrument Panel	N/S
Shifter Assembly	WT	Center Console	42, 46
Siren (Export)		Right Front Side of Engine Compartment	30
Speed Control Servo	BK	Right Rear Side of Engine Compartment	29
Starter		Lower Left Rear Engine	32, 33
Sunroof Motor	LG	Overhead Console	N/S
Sunroof Switch	BK	Overhead Console	N/S
Tailgate Cylinder Lock Switch	LG	In Tailgate	54
Tailgate Flip-Up Ajar Switch	GY	In Tailgate	54
Tailgate Lock Motor/Ajar Switch	BK	In Tailgate	54
Throttle Position Sensor	WT	On Throttle Body	1
Trailer Tow Brake Lamp Relay		Right Quarter Panel	55

CONNECTOR/GROUND/SPLICE LOCATION (Continued)

CONNECTOR NAME/NUMBER	COLOR	LOCATION	FIG.
Trailer Tow Circuit Breaker		Right Quarter Panel	N/S
Trailer Tow Connector	BK	At Trailer Hitch	55, 56
Trailer Tow Left Turn Relay		Right Quarter Panel	55
Trailer Tow Relay		Right Quarter Panel	55
Trailer Tow Right Turn Relay		Right Quarter Panel	55
Transfer Case Position Sensor	BK	Rear Side of Transmission	5, 7, 11, 12, 23, 24
Transmission Control Module (Diesel) LHD	BK	Right Rear Side of Engine Compartment	19
Transmission Control Module (RHD)		Left Rear Engine Compartment	20
Transmission Range Sensor (42RLE)		Left Side Transmission	5
Transmission Solenoid/Pressure Switch Assembly		Right Side of Transmission	6
Transmission Solenoid/TRS Assembly (Diesel)	GY	Left Side of Transmission	24
Transponder-Tire Pressure-Left Front (Except 2.5L)		Left Front Engine Compartment	31
Transponder-Tire Pressure-Right Front (Except 2.5L)		Right Front Engine Compartment	30
Transponder-Tire Pressure-Right Rear (Except 2.5L)		Right Rear Lower Body	53
Vacuum Reservoir Solenoid		Right Rear Engine Compartment	27
Washer Fluid Level Switch	LG	At Washer Fluid Reservoir	30
Washer Pump	BK	Right Front Side of Engine Compartment	30
Water In Fuel Sensor (Diesel)		Left Rear Side of Engine Compartment	20

CONNECTOR/GROUND/SPLICE LOCATION (Continued)

GROUNDS

GROUND NUMBER	LOCATION	FIG.
G100	Left Side of Engine Compartment	8, 9, 14, 20
G101 (2.4L)	Left Side of Engine Compartment	15
G102 (A/T Gas)	Left Rear Side of Engine Compartment	8
G102 (Diesel)	Left Rear Side of Engine Compartment	19
G103 (3.7L)	Right Front Side of Engine	4
G103 (Diesel)	Right Front Side of Engine	21
G105	Left Side of Engine Compartment	32, 33
G106	Left Side of Engine Compartment	32, 33
G110	Left Side of Engine Compartment	34, 35
G112	Left Front Side of Engine Compartment	31
G200	Near Body Control Module	N/S
G201	Under Center Console	39, 43
G202	Left Kick Panel (Black Connector)	N/S
G203	Under Center of Instrument Panel	N/S
G300	Left Front Corner of Driver Seat, Under Carpet	41, 42 44
G301	Under Carpet at Front Center of Driver Seat	42, 44, 46
G302	Right Front Seat	40, 45, 49
G303	Left Rear Quarter Panel	49
G304	Right Rear Lower Quarter	N/S
G320	At Fuel Tank	N/S

CONNECTOR/GROUND/SPLICE LOCATION (Continued)

SPLICES

SPLICE NUMBER	LOCATION	FIG.
S101	Near T/O to Power Distribution Center	34
S102	In T/O for Power Distribution Center	31
S103 (Diesel)	In T/O for C100	36
S103 (Gas)	Left Rear Engine Compartment	35
S104	Rear Engine Compartment	19
S105	In T/O for C100	36
S106	In T/O for C100	36
S107 (Diesel)	In T/O for C100	36
S108	Near T/O for C106	N/S
S109	In Trough Near T/O for High Note Horn	30
S110	Near T/O for C106	30, 31
S111	In Trough Near T/O for High Note Horn	30
S112	Near T/O to Power Distribution Center	31
S113 (LHD)	In T/O for C100	36
S114	Left Front Engine Compartment	31
S115	Near T/O for Power Distribution Center	34
S118	Left Front Engine Compartment	31
S119	Right Front Lower Engine Compartment	30
S121	Left Front Engine Compartment	31
S122	Left Front Engine Compartment	31
S123	In Trough, Front of Engine Compartment	N/S
S124	In T/O for Junction Block C3	36
S125	In T/O for Junction Block C3	36
S127	Near T/O for Power Distribution Center	34
S128	Center Instrument Panel	43
S129	Right Side Engine Compartment	30
S130	Near T/O for Left Headlamp	N/S
S131	In T/O for Right Headlamp	N/S
S133	In T/O for Transmission Control Module	19, 20
S134	In T/O for Transmission Control Module	19, 20
S135 (LHD)	In T/O for Junction Block C3	36
S135 (RHD)	In T/O for C100	36
S136	Lower Front Engine Compartment	30
S137	Lower Front Engine Compartment	30
S140	Near T/O for Left Front Park/Turn Signal Lamp	N/S
S141	Near T/O for Left Fog Lamp	N/S
S142	Near T/O for Left Front Park/Turn Signal Lamp	N/S
S143	Near T/O for Right Front Park/Turn Signal Lamp	N/S
S144	Near T/O for Left Fog Lamp	N/S
S145	Near T/O for Right Front Park/Turn Signal Lamp	N/S

CONNECTOR/GROUND/SPLICE LOCATION (Continued)

SPLICE NUMBER	LOCATION	FIG.
S146	Near T/O for Right Front Park/Turn Signal Lamp	N/S
S147	Front Lighting Harness	N/S
S148	Front Lighting Harness	N/S
S149	Front Lighting Harness	N/S
S150	Right Side Engine Compartment	27
S151 (2.4L)	Near T/O for C110	11, 12
S151 (3.7L)	In Trough Near T/O for Fuel Injector No.3	8
S151 (Diesel)	In Trough Near T/O for Accelerator Pedal Position Sensor	20
S152	In Trough Near T/O for Fuel Injector No.4	2
S153 (3.7L)	Near T/O for Idle Air Control Motor	1
S153 (Diesel)	In Trough Near T/O for Generator	21, 25
S154	Near T/O for Engine Starter Motor	2, 4, 11, 12, 21
S155	Near T/O for Knock Sensor	1, 5
S156 (2.4L)	In Trough Near T/O for C112	13, 14
S156 (3.7L)	Near T/O for Powertrain Control Module C1	N/S
S156 (Diesel)	Left Side Engine	21
S157	Near T/O for Oxygen Sensor 1/1 Upstream	5
S158	In Trough Near T/O for C112	N/S
S159	Near T/O for Knock Sensor	2
S160 (2.4L)	In T/O for C104	N/S
S160 (3.7L)	In T/O for C104	10
S160 (Diesel)	In T/O for Transmission Control Module	19
S161 (LHD)	Right Rear Engine Compartment	19
S161 (RHD)	In T/O for Transmission Control Module	20
S163 (3.7L)	Left Rear Engine Compartment	8
S164	In Trough on Right Rear Side of Engine Compartment	8, 19
S165	In Trough on Right Rear Side of Engine Compartment	N/S
S166	Near T/O for G100	8
S167	Rear Engine Compartment	20
S168 (2.4L)	Near T/O for Coil Rail	11, 12
S168 (3.7L)	Near T/O for Fuel Injector No.6	2
S169 (2.4L)	Near T/O for C101	11
S169 (3.7L)	Near T/O for Oxygen Sensor 1/1 Upstream	1, 3
S169 (Diesel)	Near T/O for Generator	21
S175	In Trough on Top of Engine	23, 25
S177	In Trough Near T/O for G100	8, 20
S178	Near T/O for Oxygen Sensor 2/2 Downstream	5, 6, 7
S181	In Trough Near T/O for G100	20
S184	Near T/O for Powertrain Control Module C1	N/S
S185	Near T/O for Fuel Pressure Solenoid	21
S194	In T/O for Junction Block C3	36
S199	Neat T/O for Accelerator Pedal Position Sensor	20

CONNECTOR/GROUND/SPLICE LOCATION (Continued)

SPLICE NUMBER	LOCATION	FIG.
S200	Near T/O for C201	N/S
S201	Near T/O for Left Instrument Panel Lamp	N/S
S202	Left Side Body Near G301	41
S204	Near T/O for Data Link Connector	N/S
S205	In T/O for C100	36
S206	Near T/O for Multifunction Switch C2	N/S
S207	In T/O for C100	N/S
S208	Near T/O for G202	N/S
S210	Near T/O for Left Instrument Panel Lamp	N/S
S211	Fuel Tank Harness	N/S
S212	Near T/O for Diagnostic Junction Port	N/S
S213	Near T/O for Diagnostic Junction Port	N/S
S214	Near T/O for Airbag Control Module C1 (ORC C1)	N/S
S215	Near T/O for Multifunction Switch C2	N/S
S216	In T/O for Instrument Cluster	N/S
S217	Near T/O for Multifunction Switch C2	N/S
S218	Near T/O for Multifunction Switch C2	N/S
S219	In T/O for Junction Block C3	N/S
S220	In T/O for Junction Block C3	N/S
S221	Near T/O for Left Speed Control Switch	N/S
S222	Near T/O for Right Speed Control Switch	37
S223	Near T/O for Left Remote Radio Switch	37
S224	Near T/O for Right Remote Radio Switch	37
S225	Near T/O for G203	N/S
S230	In T/O for A/C Heater Control C1	N/S
S231	Near T/O for Park Brake Switch	46
S300 (LHD)	Near T/O for C309	49
S300 (RHD)	Near T/O for C310	53
S301	In T/O For Radio C1	N/S
S302	Near T/O for Rear Power Outlet	53
S303 (LHD)	Near T/O for Shifter Assembly	42
S303 (RHD)	Floor Near Right Front Door	45
S304	Near T/O for License Lamp	53
S306 (LHD)	Near T/O for Junction Block C2	39
S306 (RHD)	In T/O for C319	53
S308 (LHD)	In T/O for Rear Power Outlet	49
S308 (RHD)	Near T/O for Rear Power Outlet	N/S
S310	Near T/O for C303	53
S312	Near T/O for G330	53
S313	In T/O for Trailer Tow Relays	55
S314	In T/O for Trailer Tow Relays	55
S315	Left Steering Wheel	37

CONNECTOR/GROUND/SPLICE LOCATION (Continued)

SPLICE NUMBER	LOCATION	FIG.
S317	Right Steering Wheel	37
S318 (LHD)	Near T/O for Left Instrument Panel Speaker	N/S
S318 (RHD)	Floor Near Right Front Door	45
S319 (LHD)	Near T/O for C201	39
S319 (RHD)	Near T/O for Left Instrument Panel	43
S322	Near T/O for Left Instrument Panel	39, 43
S323 (LHD)	Near T/O for Left Instrument Panel	39
S323 (RHD)	Near T/O for Right Instrument Panel Speaker	43
S324 (Premium)	Near T/O for Right Instrument Panel Speaker	39, 43
S326	Near T/O for Heated Seat Module	N/S
S327	Near T/O for Left Heated Seat Assembly	N/S
S328	In T/O for Heated Seat Module	N/S
S329	Near T/O for Right Heated Seat Switch	N/S
S331	Under Carpet Near Driver Seat Right Front Fastner	42, 46
S332	Under Carpet Near Driver Seat Right Front Fastner	46
S333	Near G302	45
S334	Near T/O for G302	N/S
S336 (LHD)	Near T/O for Left Instrument Panel	39
S336 (RHD)	Near T/O for Right Instrument Panel Speaker	43
S338	Near T/O for C201	39, 43
S340 (Base)	Near T/O for C201	39
S341 (Base)	Near T/O for C201	39
S342 (Base)	Near T/O for Right Instrument Panel Speaker	39
S344 (Base)	Near T/O for Right Instrument Panel Speaker	39
S345	Center Console	46
S346	In T/O for Trailer Tow Relays	55
S347	Near T/O for Right Tail/Stop Lamp	53
S348	Near T/O for Right Tail/Stop Lamp	53
S349	Near T/O for License Lamp	53
S351	In T/O for Rear Window Defogger	54
S352	In T/O for Rear Window Defogger	54
S353	In T/O for Radio C2	N/S
S354	In T/O for CD Changer	50
S354	In T/O for Satellite Receiver	51
S355	In T/O for Radio C2	N/S
S356	Near T/O for Center High Mounted Stop Lamp	54
S358	Center Instrument Panel	43
S359	Left Side Engine Compartment	31
S360	Near T/O for Left Power Mirror	47
S361	Near T/O for Left Power Mirror	47
S363	Left Side Lightbar	57
S364	Near T/O for Left Front Door Speaker	N/S

CONNECTOR/GROUND/SPLICE LOCATION (Continued)

SPLICE NUMBER	LOCATION	FIG.
S369	Left Side Lightbar	57
S370	Near T/O for Right Power Mirror	47
S371	Near T/O for Right Door Lock Switch	47
S372	Lower Front Engine Compartment	30
S373	Right Front Lower Engine Compartment	30
S377 (RHD)	Near T/O for Right Door Lock Switch	47
S378 (RHD)	Near T/O for Right Front Power Window Motor	47
S379 (RHD)	In Rear Body Harness near T/O for C310	53
S380	Near T/O for Rear Wiper Motor	54
S381	Near T/O for Tailgate Cylinder Lock Switch	54
S382	Near T/O for License Lamp	54
S390	Near T/O for Intrusion Sensor	N/S
S391	Near T/O for Left Visor/Vanity Lamp	N/S
S392	Near T/O for Left Visor/Vanity Lamp	N/S
S393	Near T/O for Intrusion Sensor	N/S
S394	Near T/O for Rear Map/Reading Lamp	N/S
S395	Neat T/O for Rear Map/Reading Lamp	N/S

CONNECTOR/GROUND/SPLICE LOCATION (Continued)

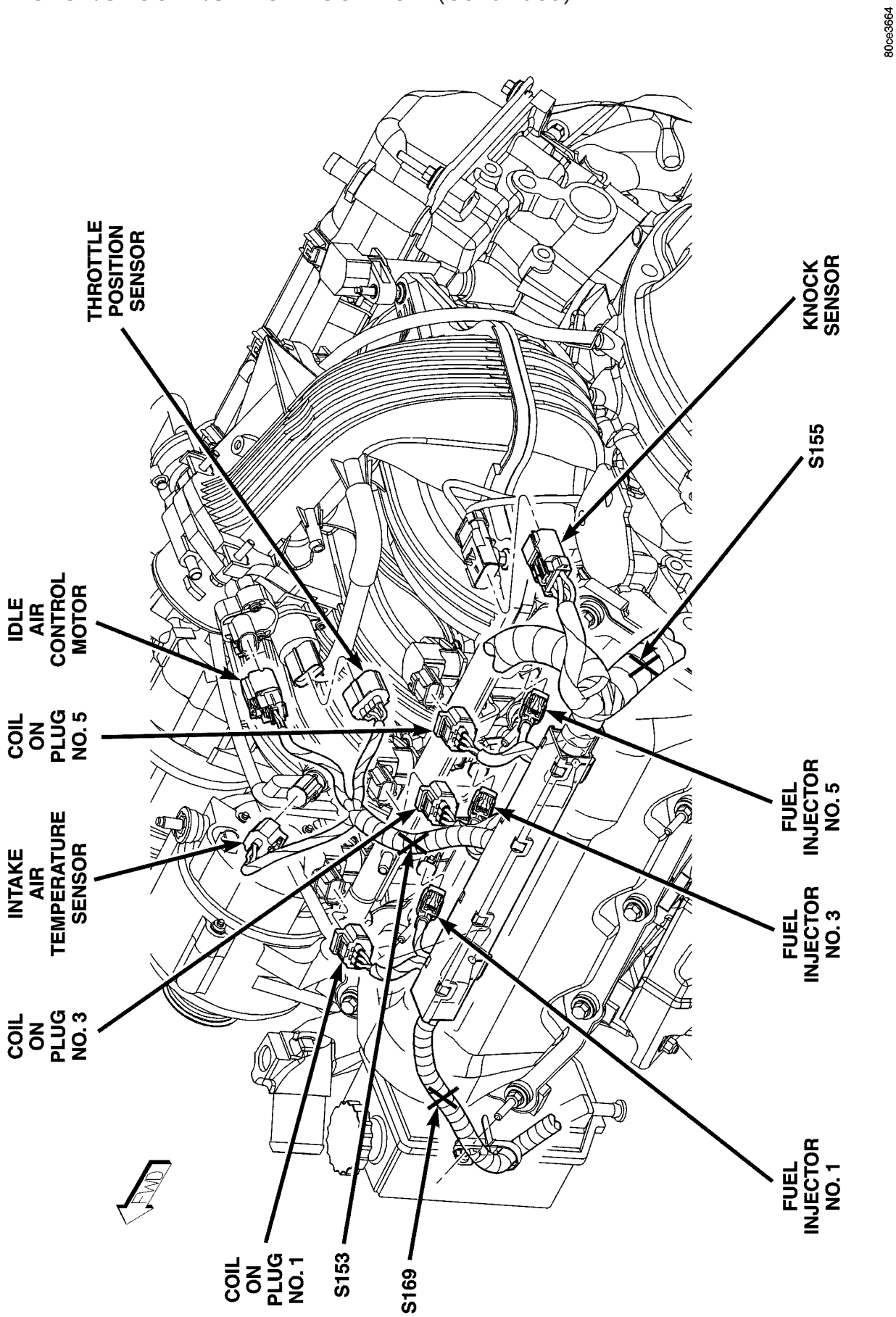

Fig. 1 LEFT SIDE ENGINE, 3.7L

CONNECTOR/GROUND/SPLICE LOCATION (Continued)

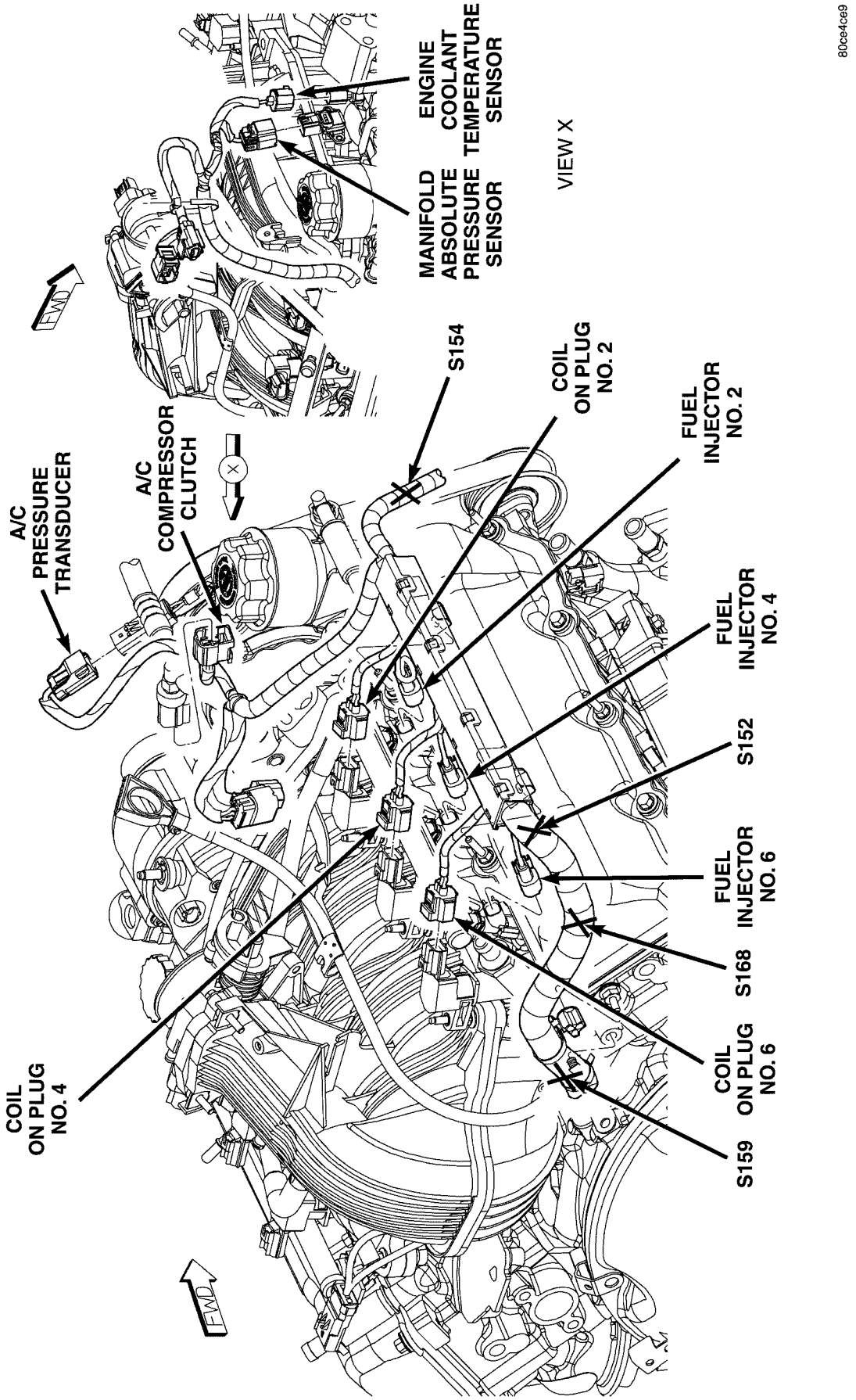

Fig. 2 RIGHT SIDE ENGINE, 3.7L

CONNECTOR/GROUND/SPLICE LOCATION (Continued)

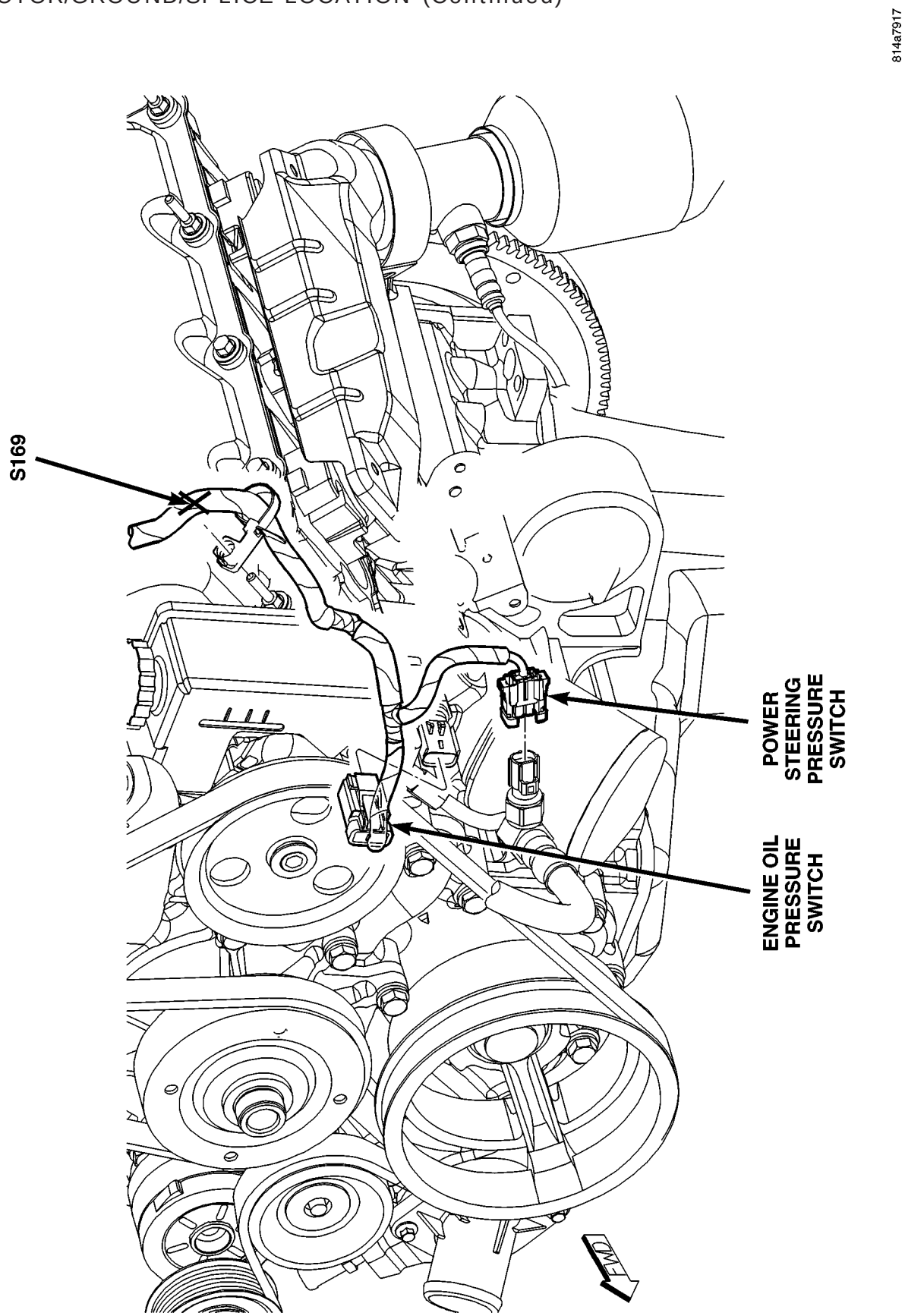

Fig. 3 LOWER LEFT ENGINE, 3.7L

CONNECTOR/GROUND/SPLICE LOCATION (Continued)

80ce4d1a

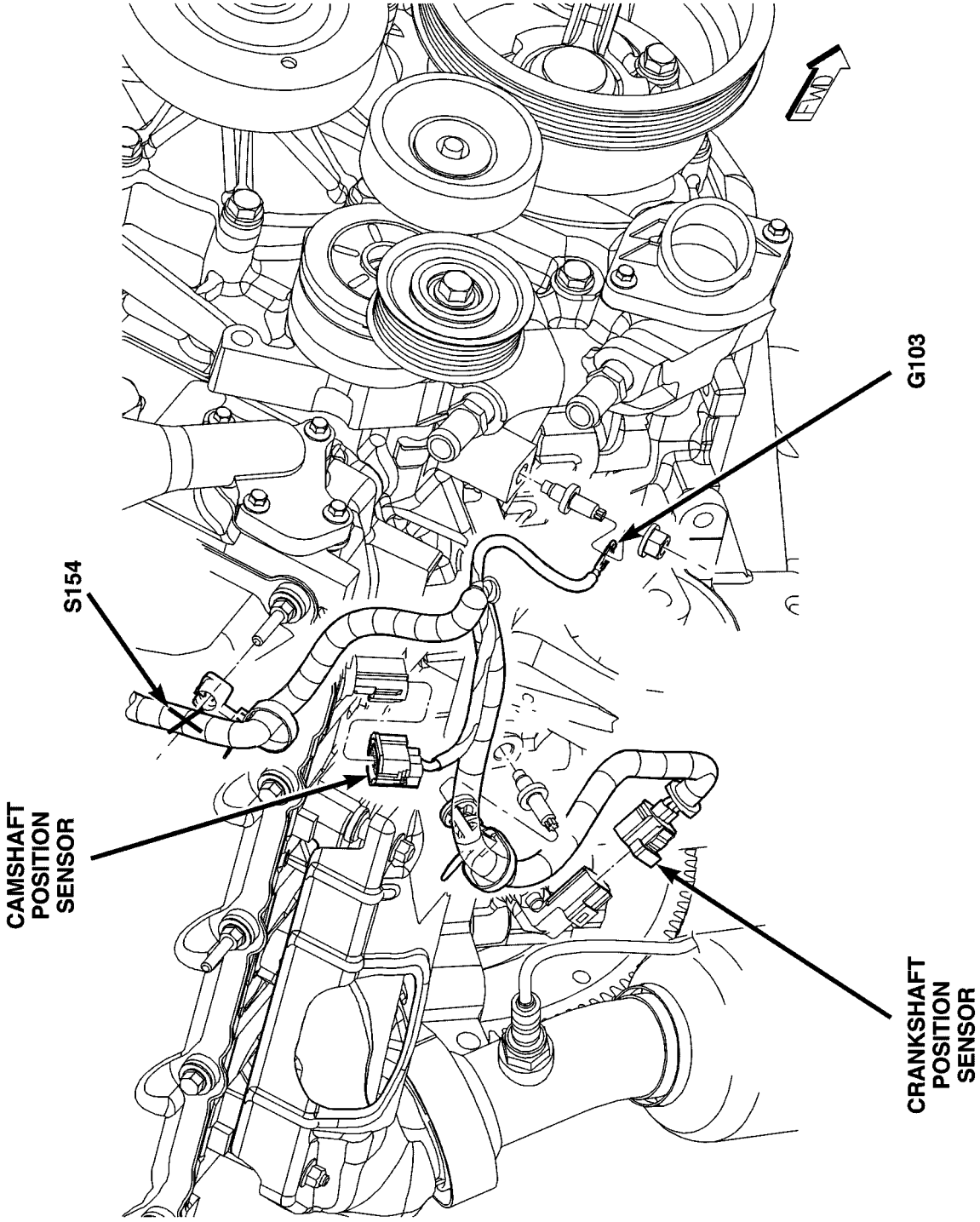

Fig. 4 LOWER RIGHT ENGINE, 3.7L

CONNECTOR/GROUND/SPLICE LOCATION (Continued)

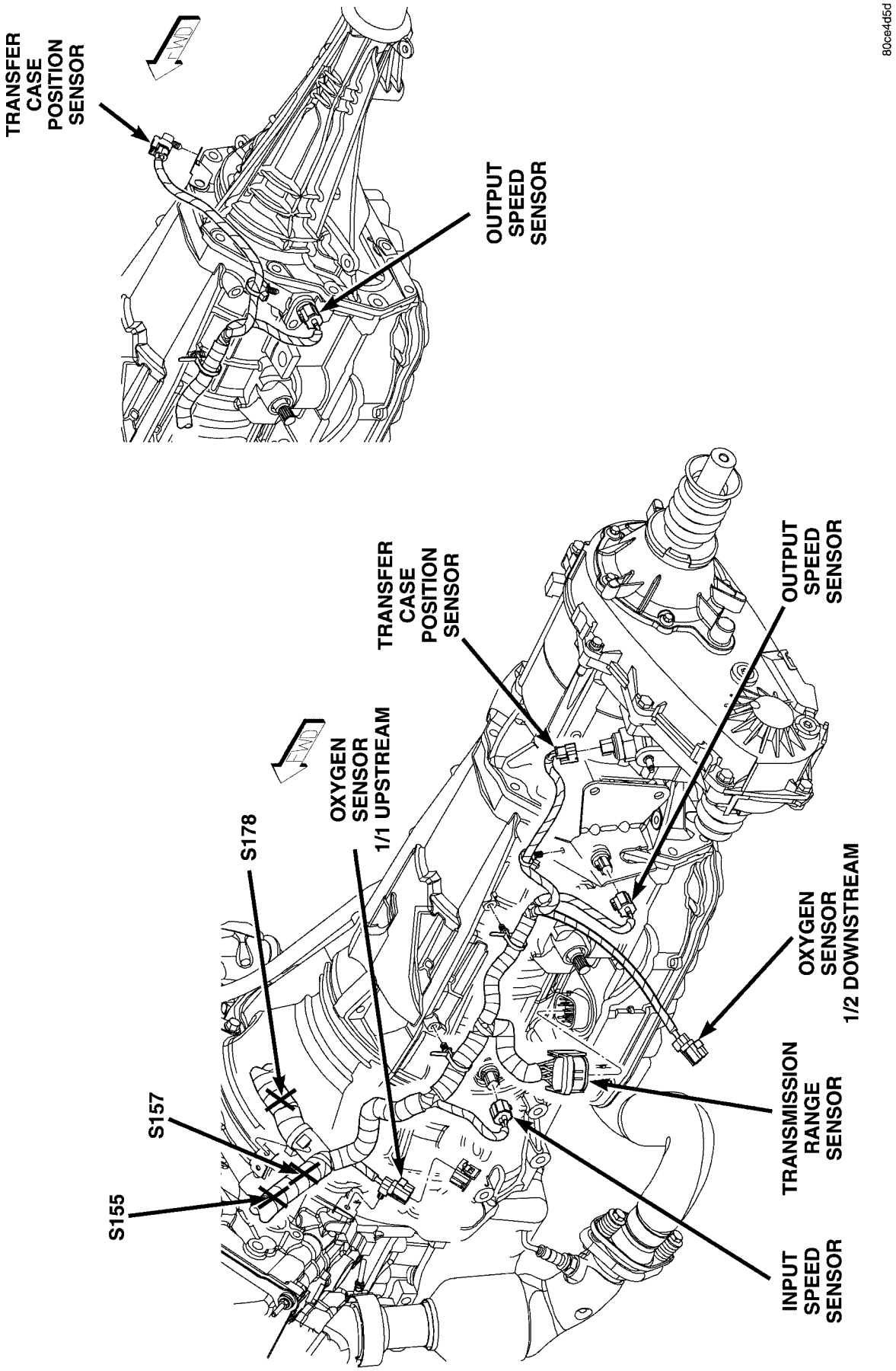

Fig. 5 LEFT SIDE TRANSMISSION, 3.7L

CONNECTOR/GROUND/SPLICE LOCATION (Continued)

80ce4d9d

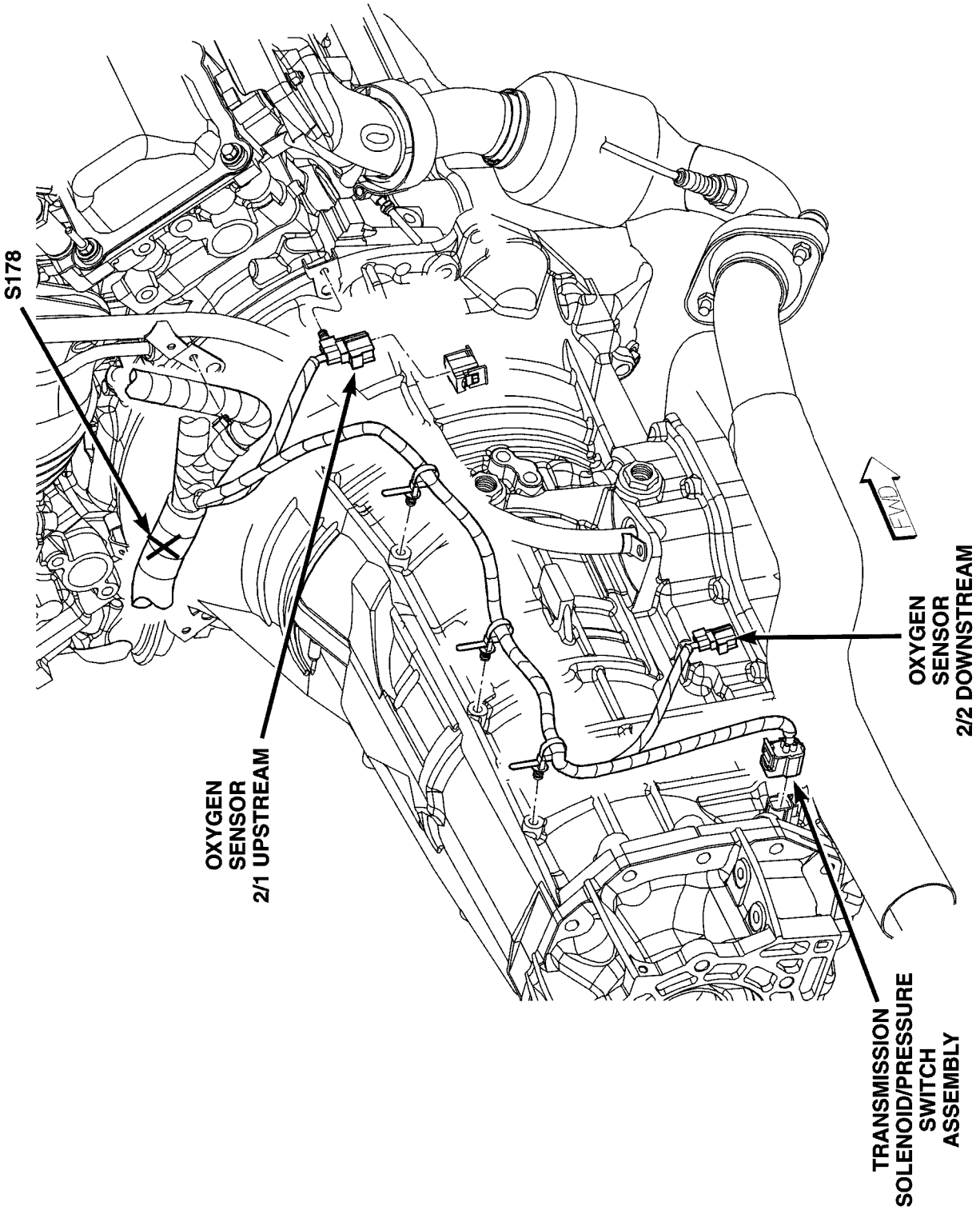

Fig. 6 RIGHT SIDE TRANSMISSION, 3.7L

CONNECTOR/GROUND/SPLICE LOCATION (Continued)

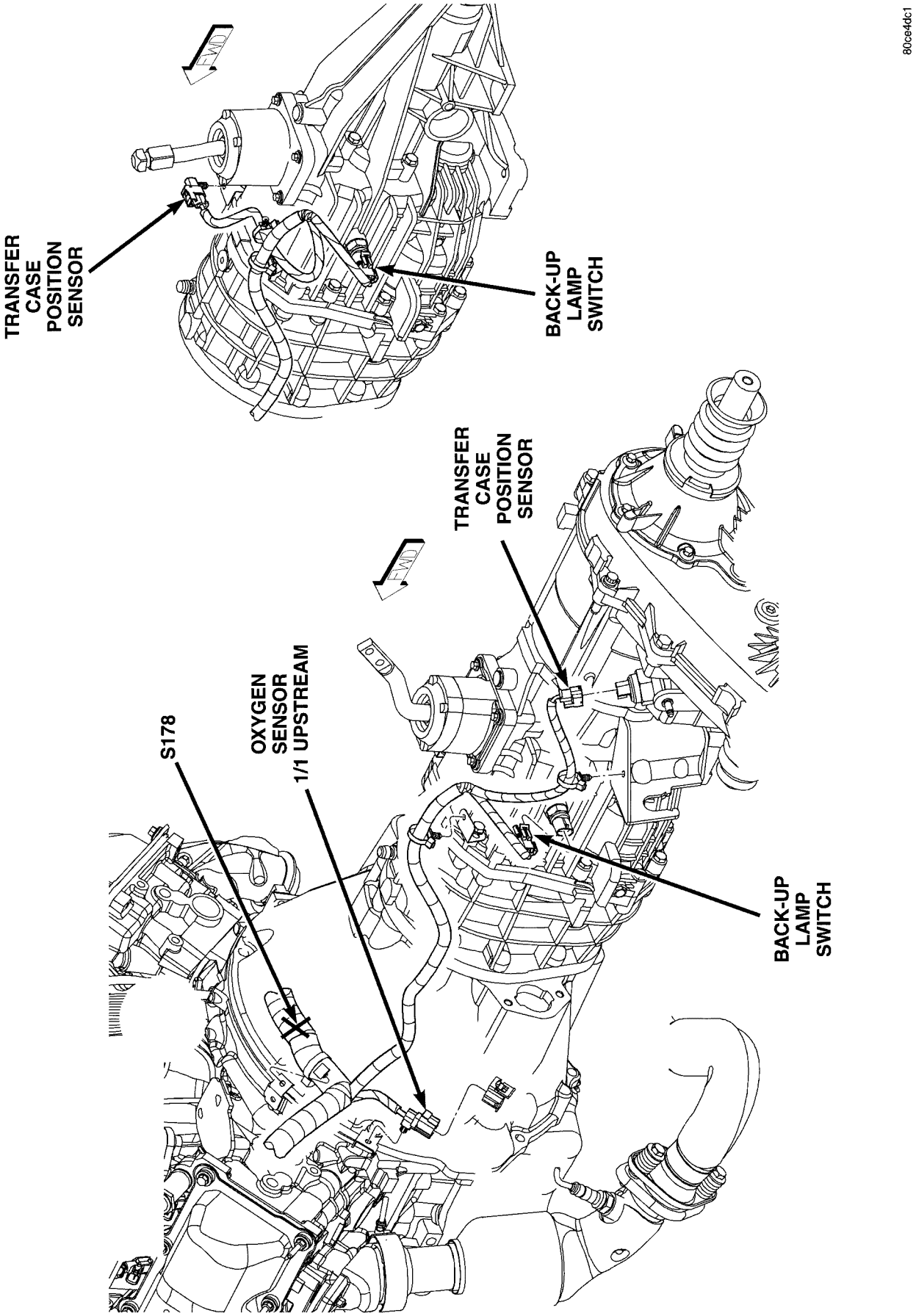

Fig. 7 MANUAL TRANSMISSION, 3.7L

CONNECTOR/GROUND/SPLICE LOCATION (Continued)

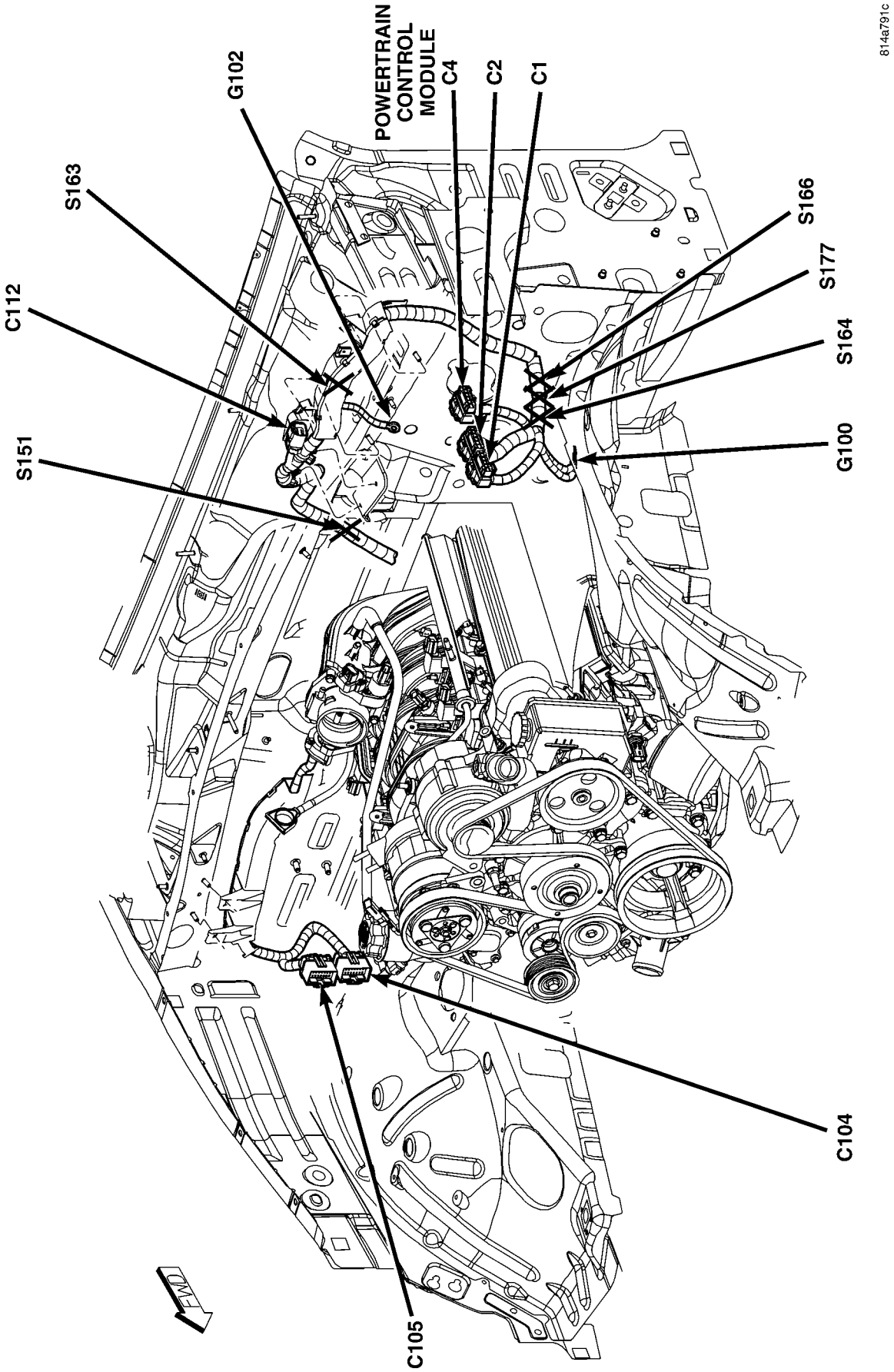

Fig. 8 RIGHT SIDE ENGINE COMPARTMENT, 3.7L

CONNECTOR/GROUND/SPLICE LOCATION (Continued)

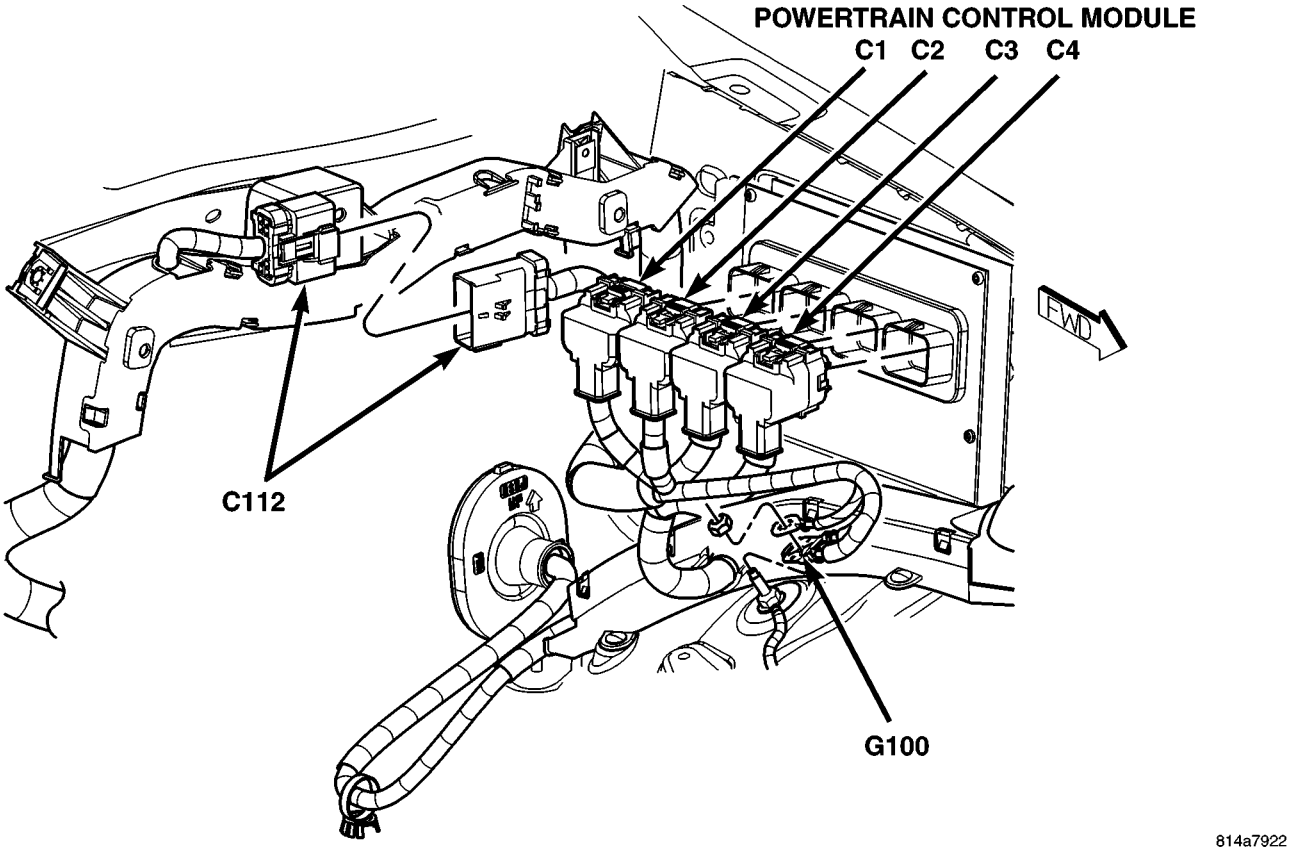

Fig. 9 LEFT SIDE ENGINE COMPARTMENT, 3.7L

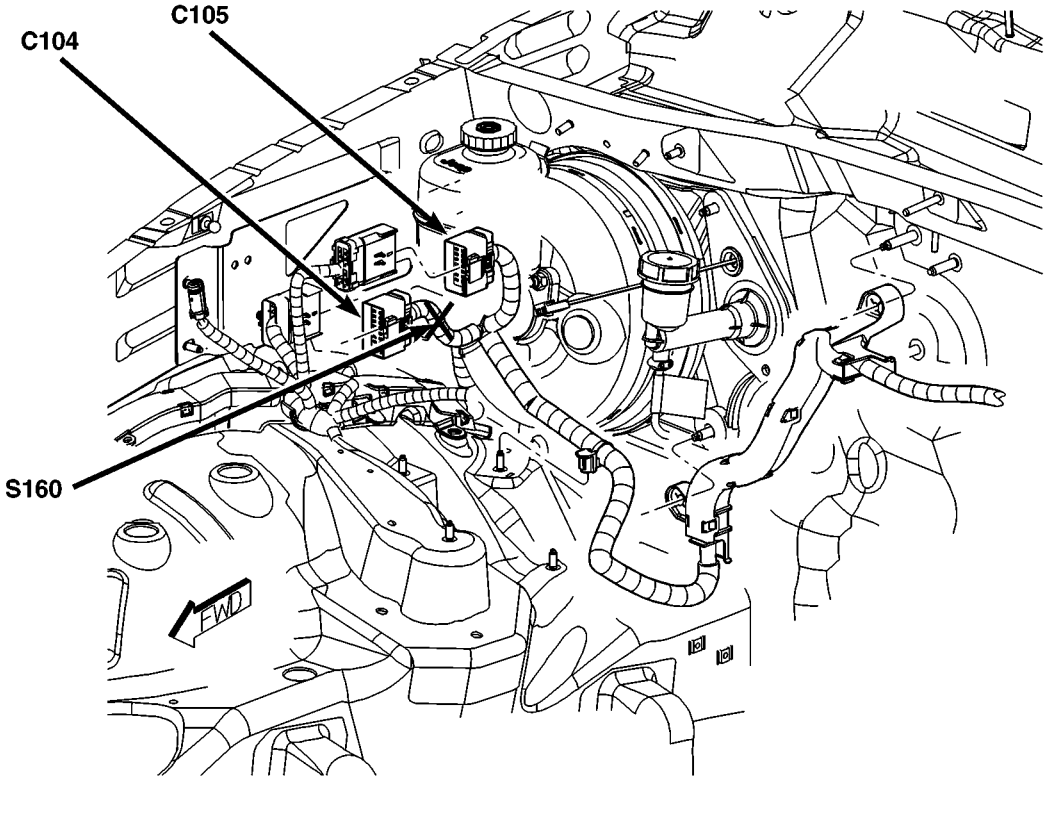

Fig. 10 RIGHT SIDE ENGINE COMPARTMENT, 3.7L, RHD

CONNECTOR/GROUND/SPLICE LOCATION (Continued)

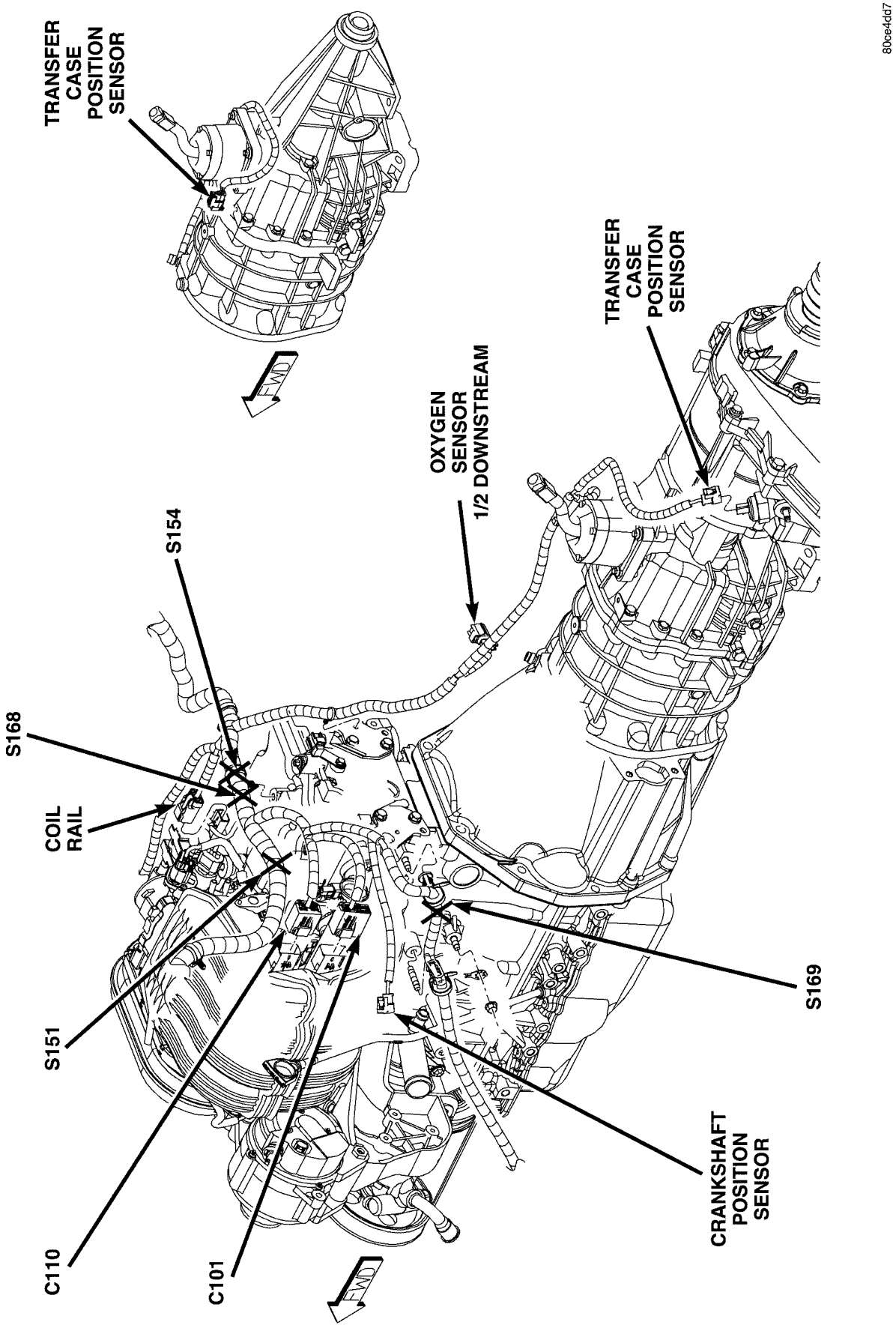

Fig. 11 ENGINE/TRANSMISSION, 2.4L

CONNECTOR/GROUND/SPLICE LOCATION (Continued)

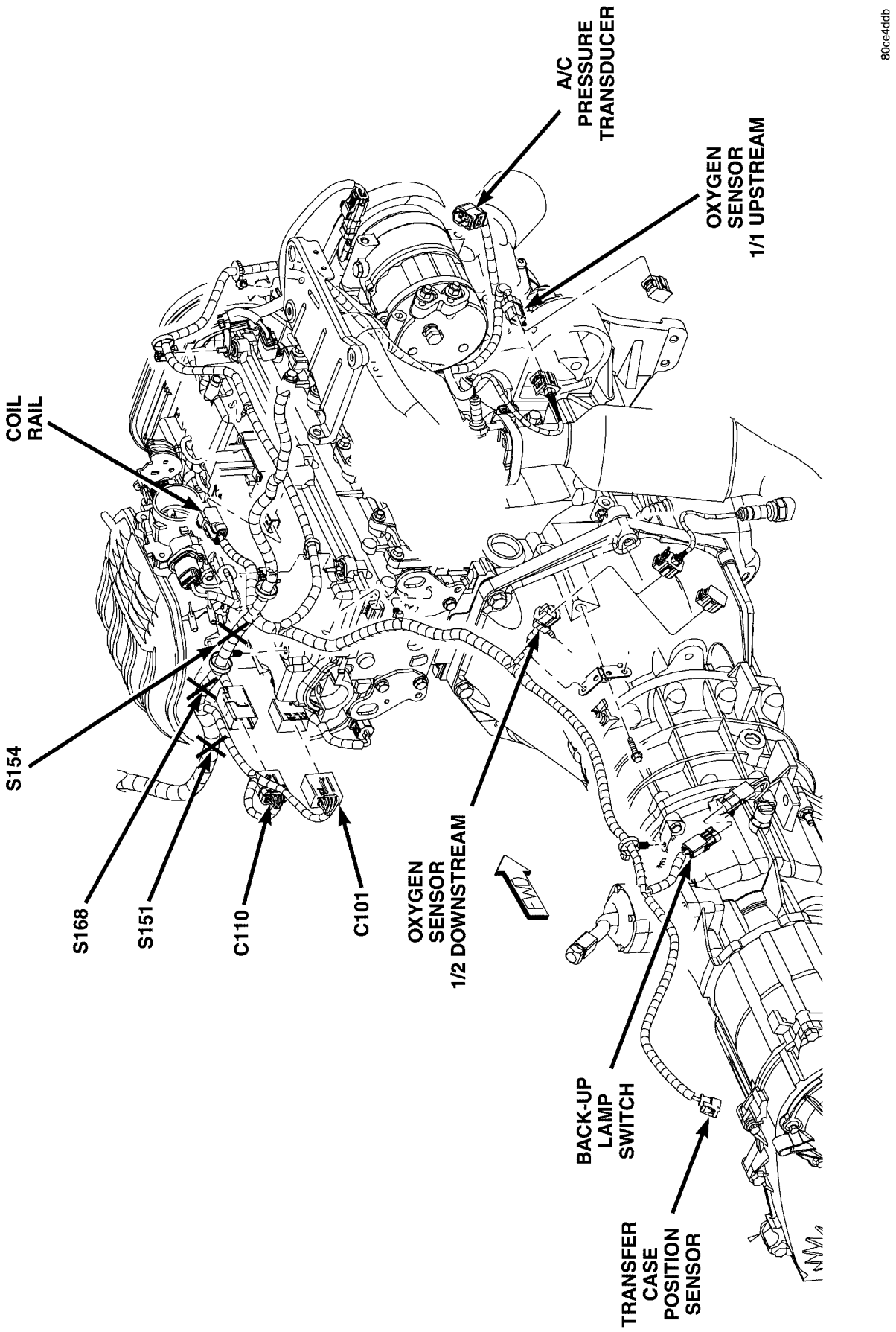

Fig. 12 ENGINE/TRANSMISSION, 2.4L

CONNECTOR/GROUND/SPLICE LOCATION (Continued)

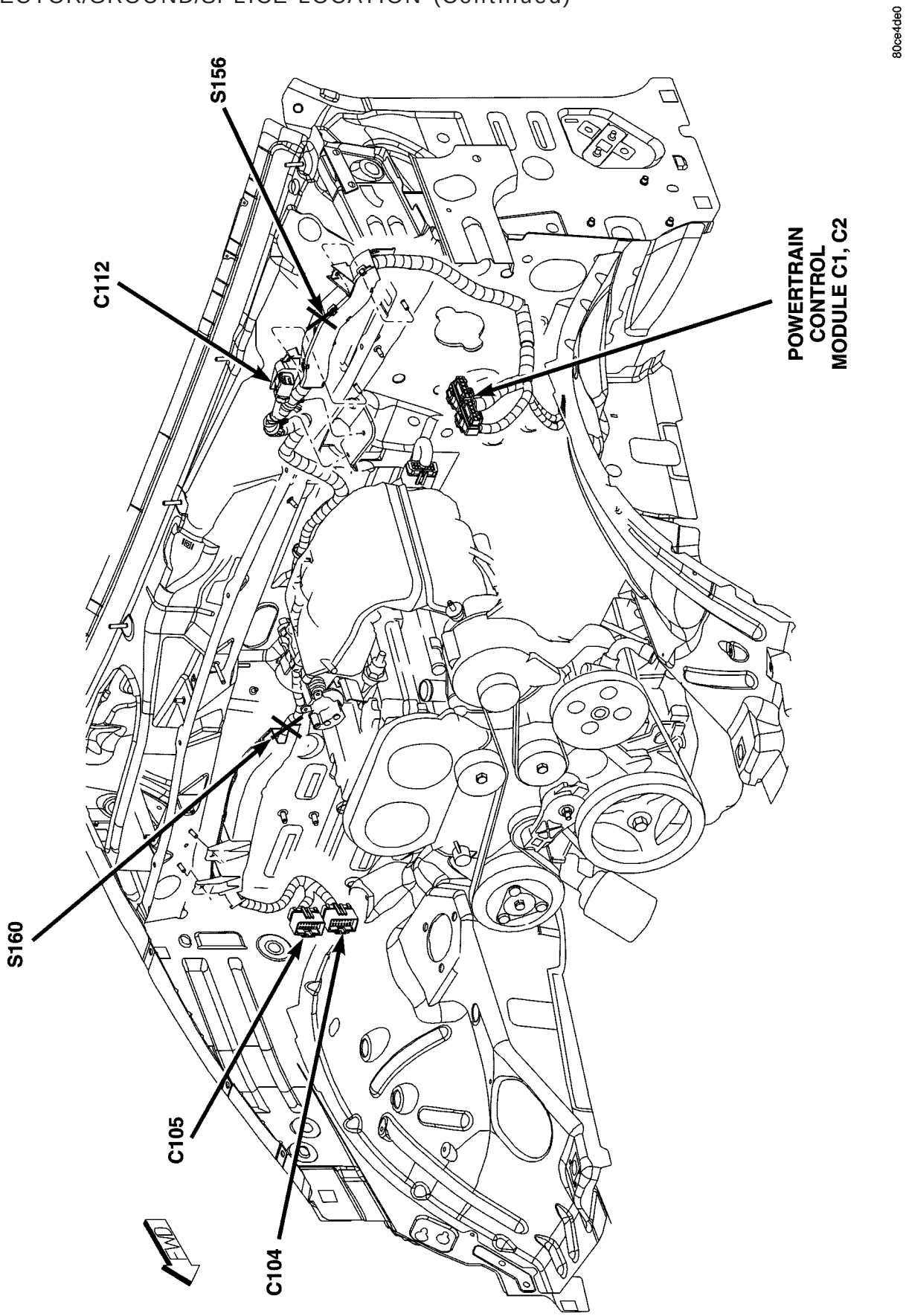

Fig. 13 ENGINE COMPARTMENT, 2.4L

CONNECTOR/GROUND/SPLICE LOCATION (Continued)

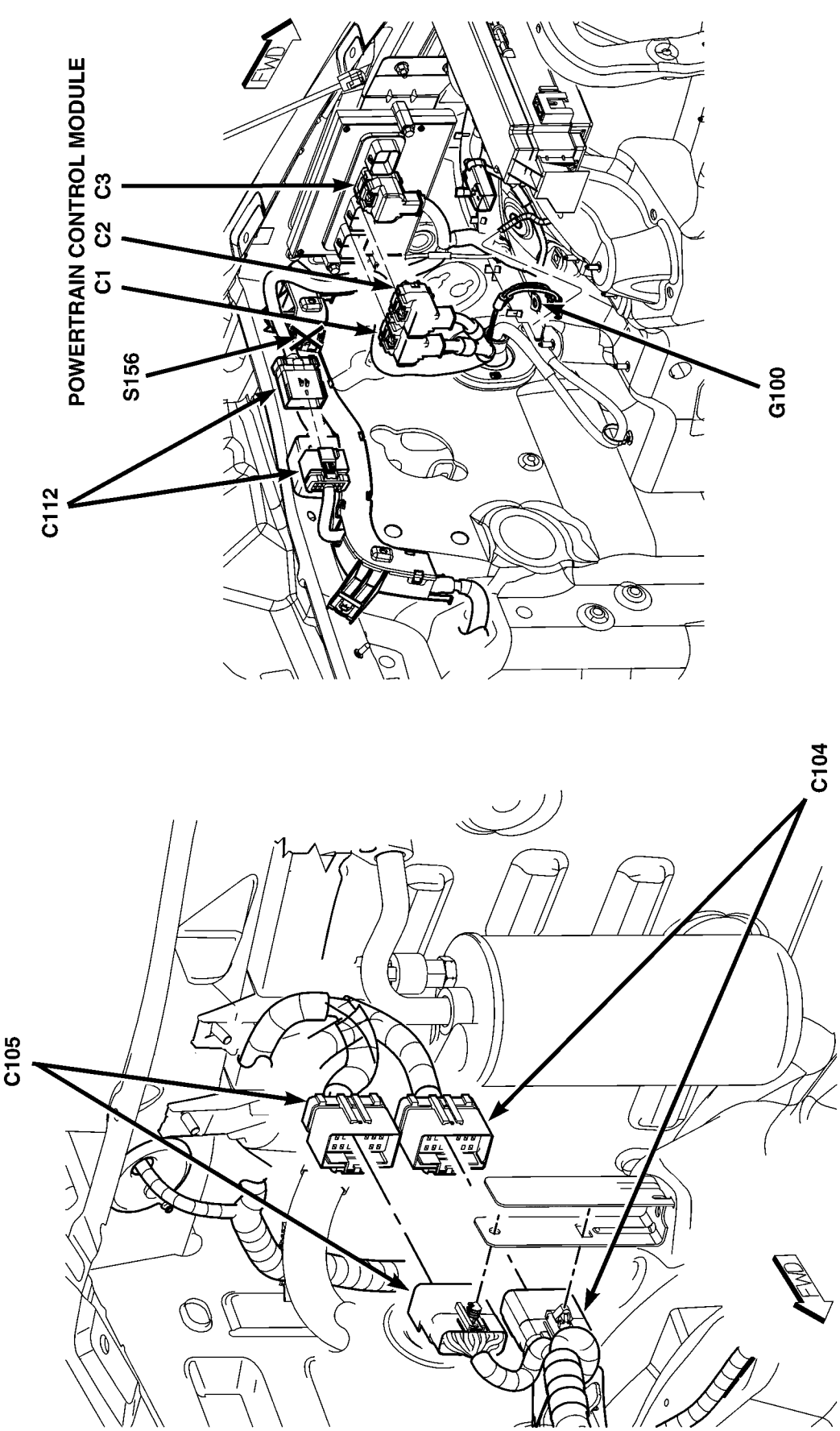

Fig. 14 RIGHT REAR ENGINE COMPARTMENT, 2.4L

CONNECTOR/GROUND/SPLICE LOCATION (Continued)

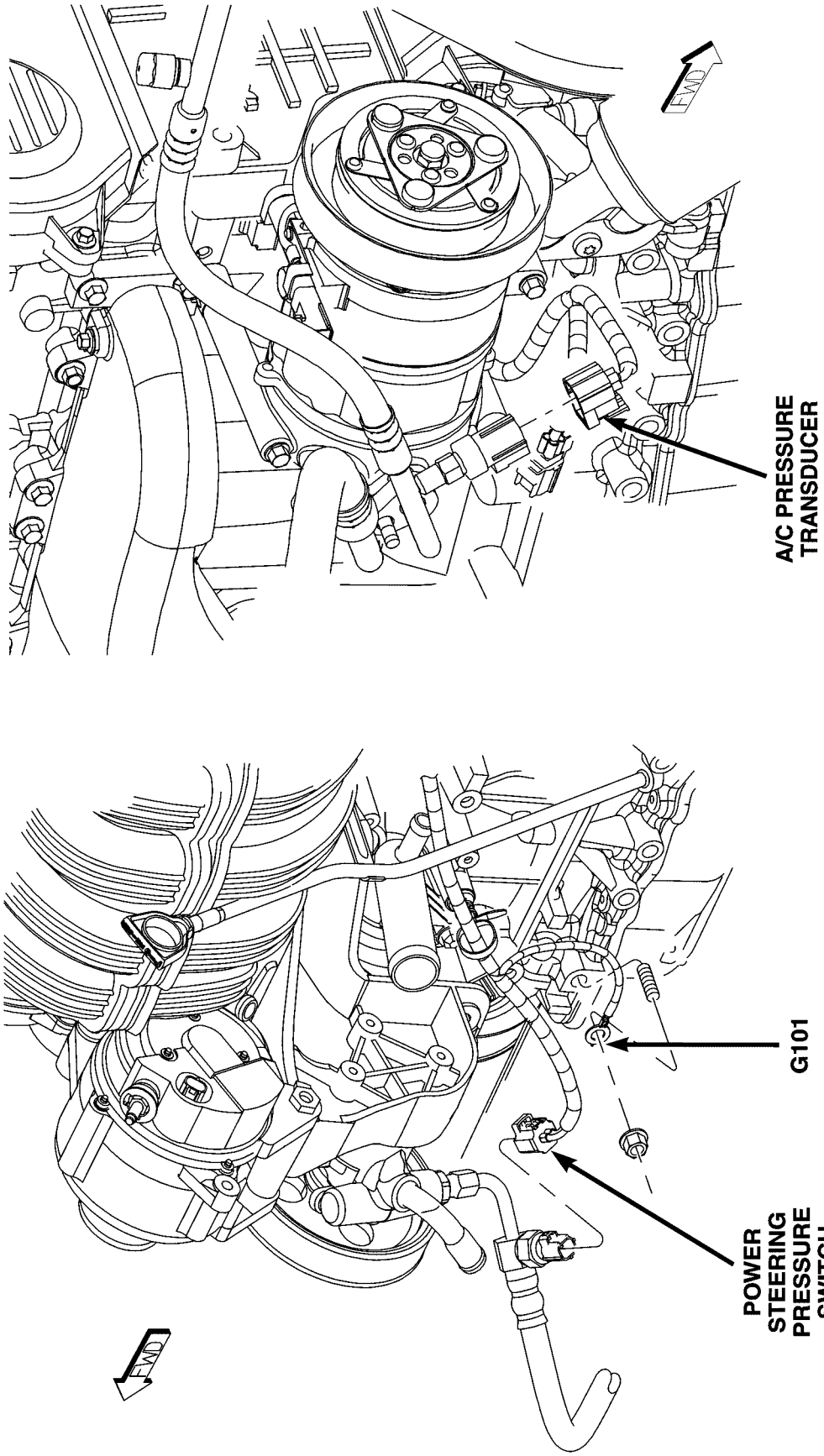

Fig. 15 ENGINE, 2.4L

CONNECTOR/GROUND/SPLICE LOCATION (Continued)

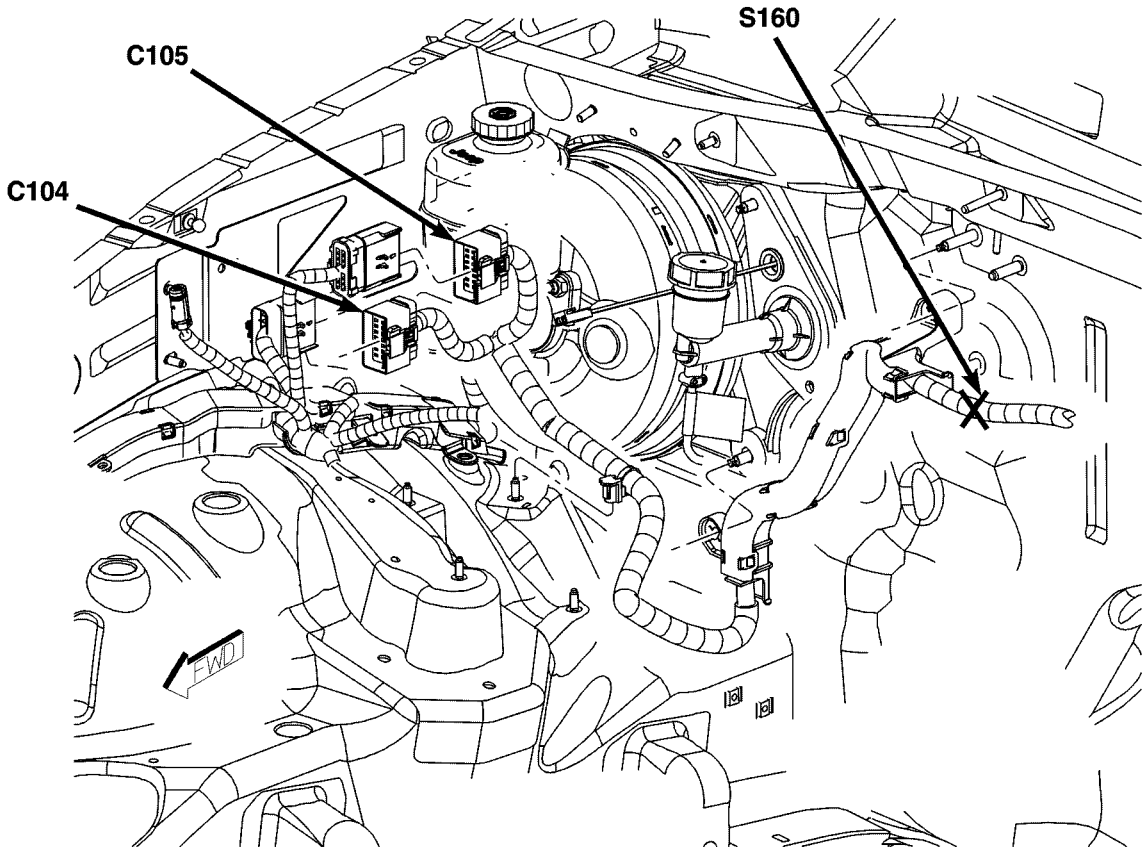

Fig. 16 RIGHT REAR ENGINE COMPARTMENT, 2.4L

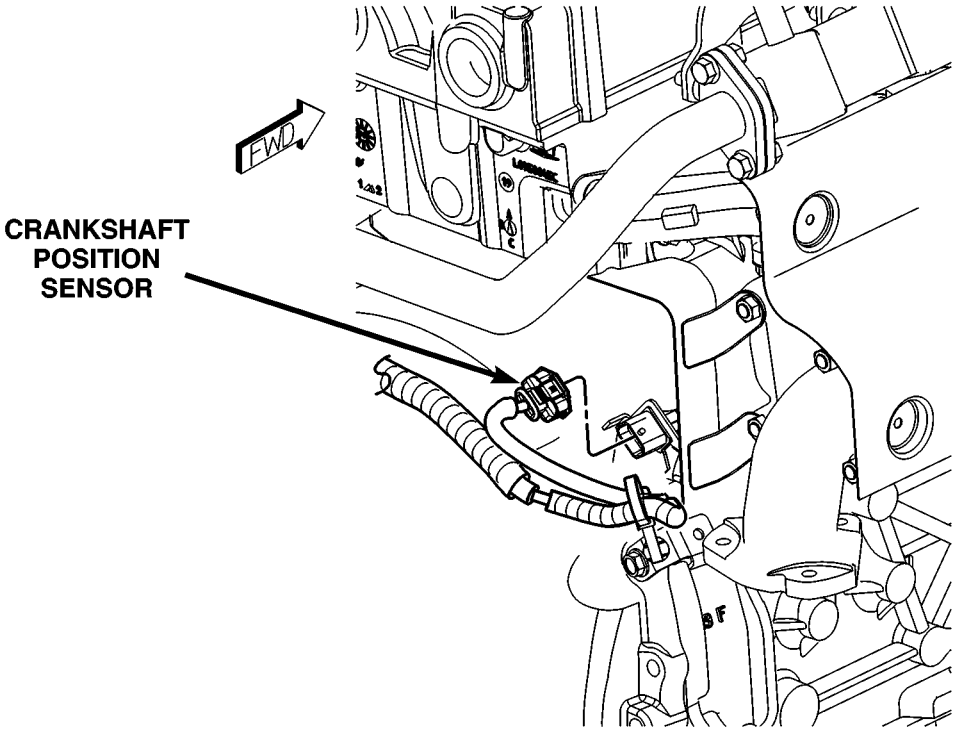

Fig. 17 DIESEL ENGINE

CONNECTOR/GROUND/SPLICE LOCATION (Continued)

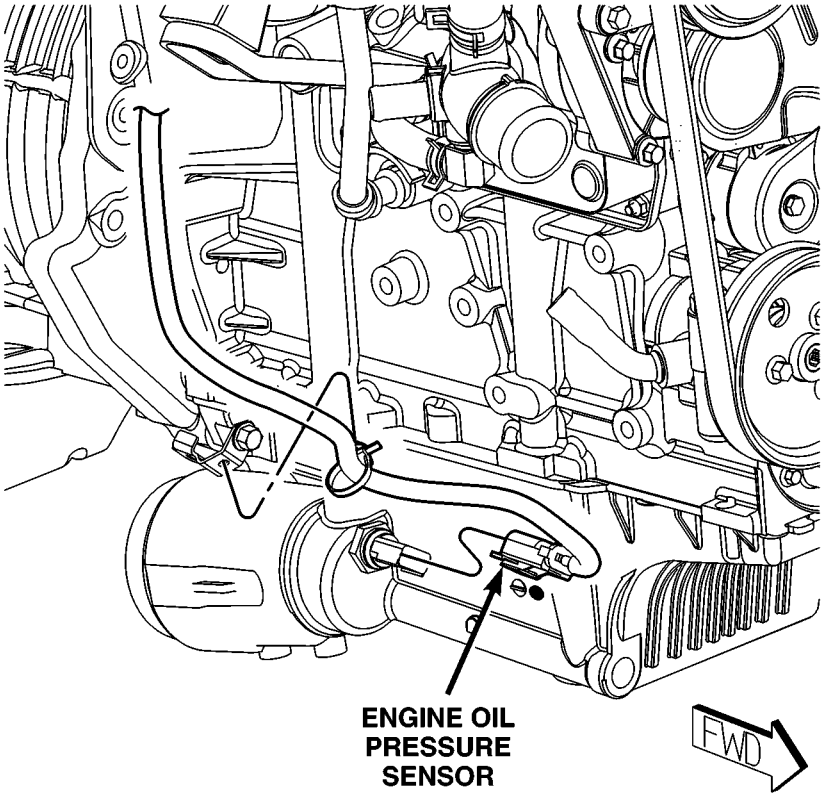

814a7c61

Fig. 18 LOWER RIGHT FRONT DIESEL ENGINE

CONNECTOR/GROUND/SPLICE LOCATION (Continued)

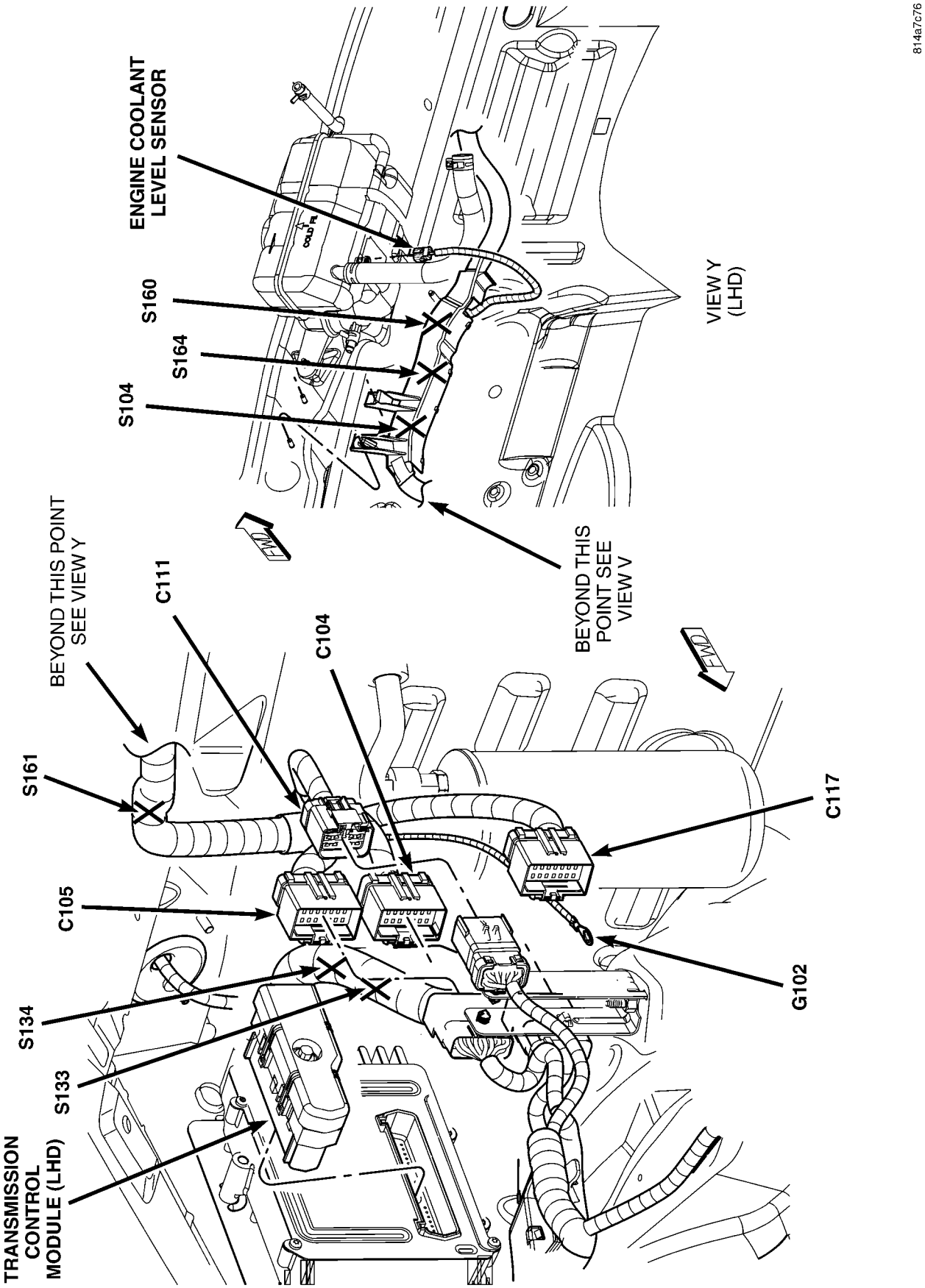

Fig. 19 DIESEL ENGINE COMPARTMENT

CONNECTOR/GROUND/SPLICE LOCATION (Continued)

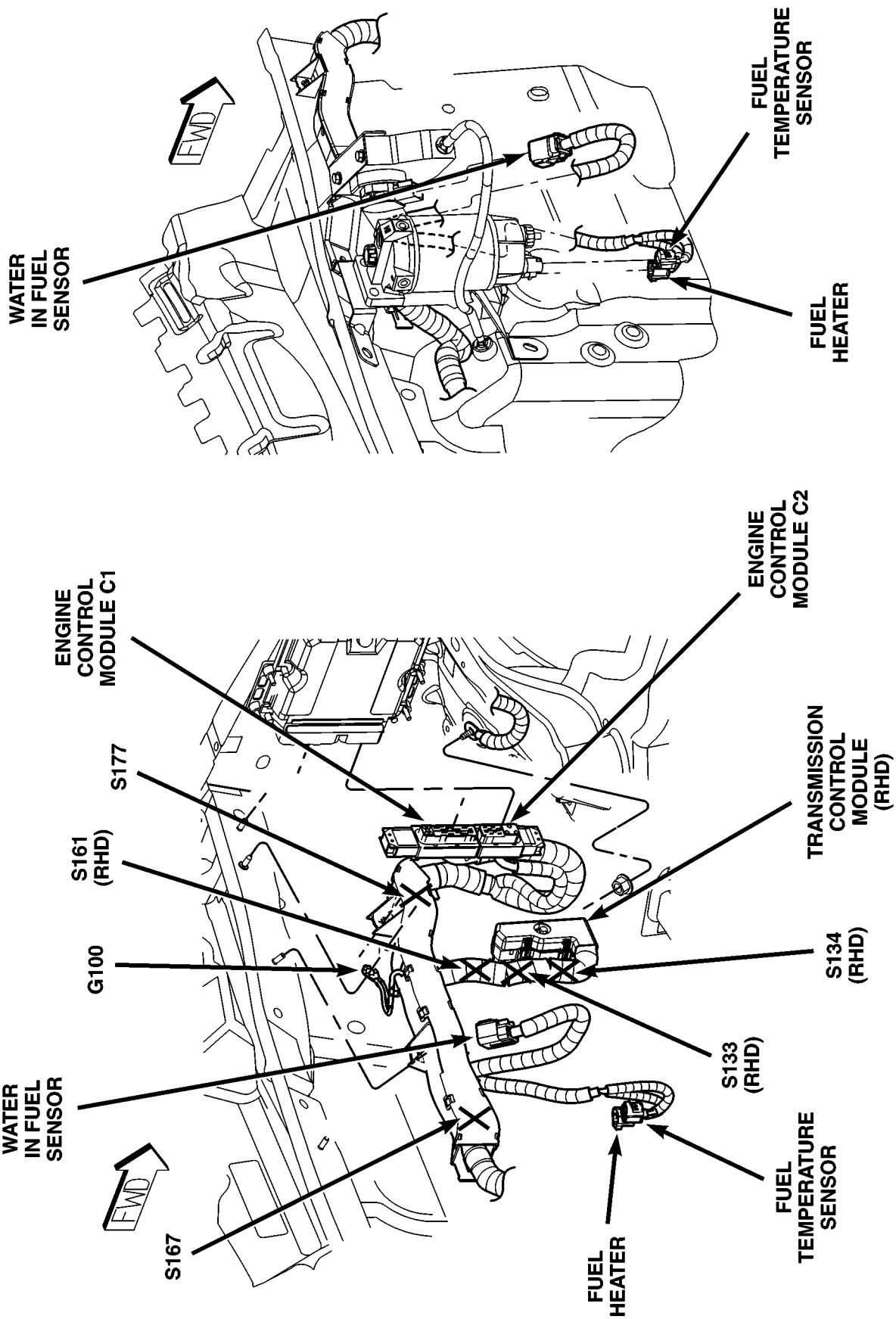

Fig. 20 DIESEL ENGINE COMPARTMENT

CONNECTOR/GROUND/SPLICE LOCATION (Continued)

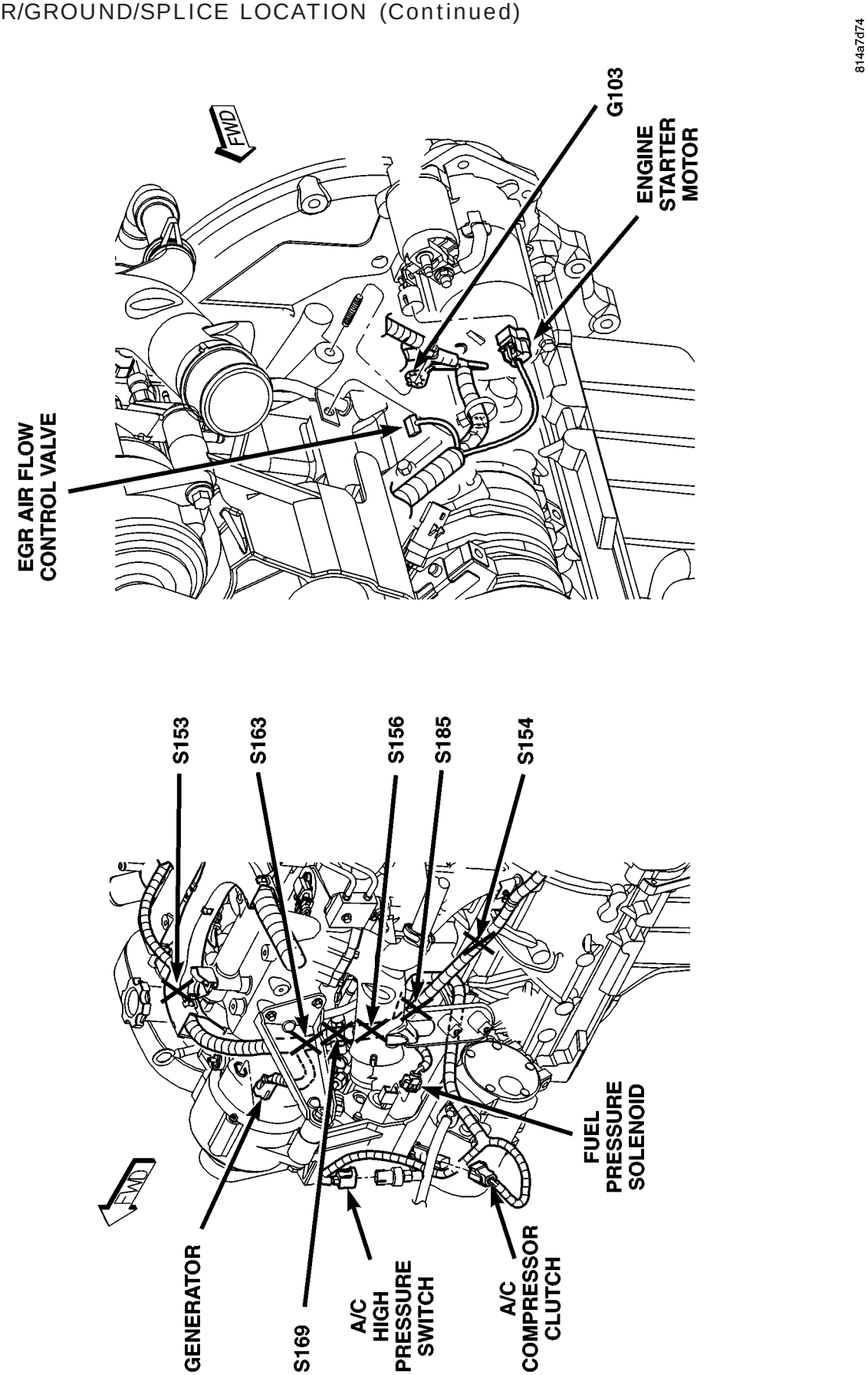

Fig. 21 LEFT SIDE DIESEL ENGINE

CONNECTOR/GROUND/SPLICE LOCATION (Continued)

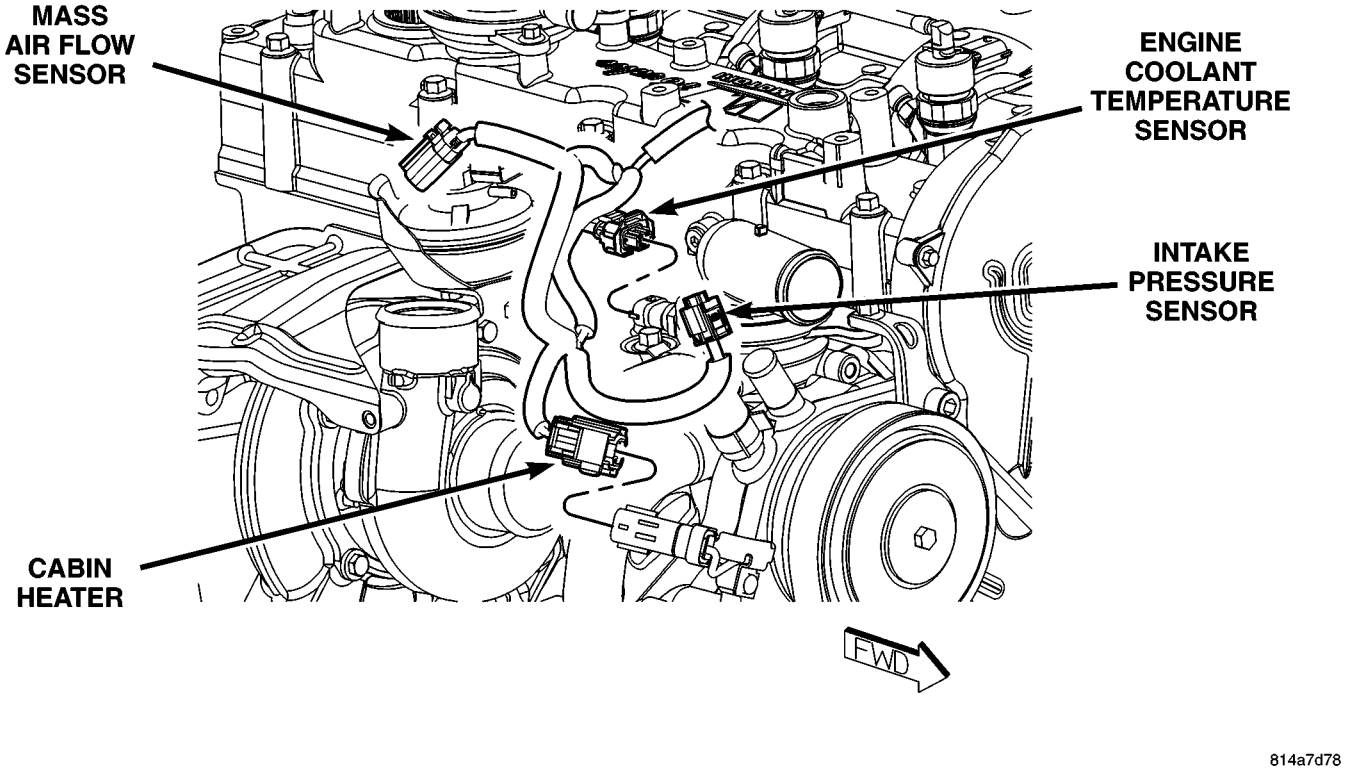

Fig. 22 FRONT DIESEL ENGINE

CONNECTOR/GROUND/SPLICE LOCATION (Continued)

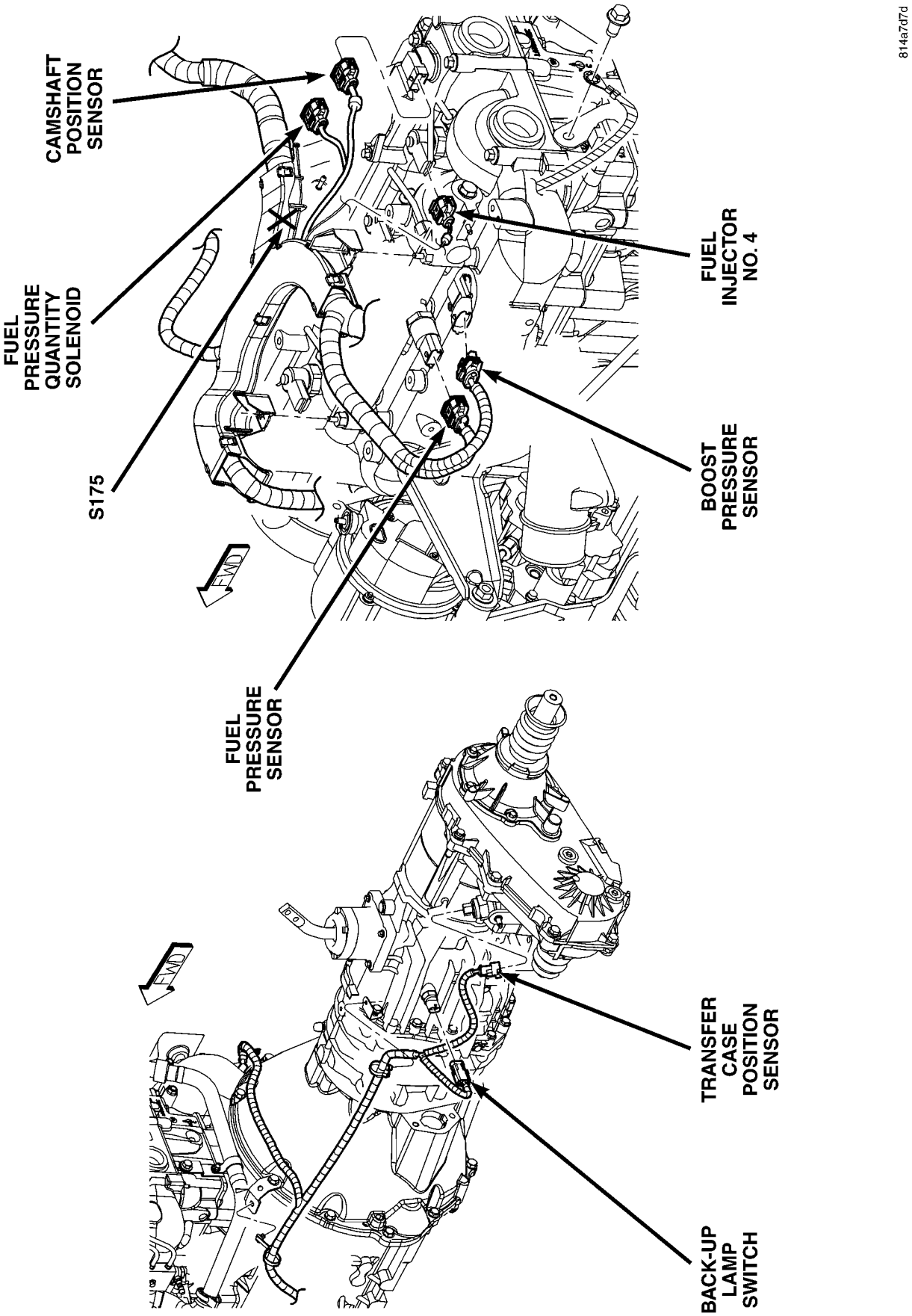

Fig. 23 REAR DIESEL ENGINE

CONNECTOR/GROUND/SPLICE LOCATION (Continued)

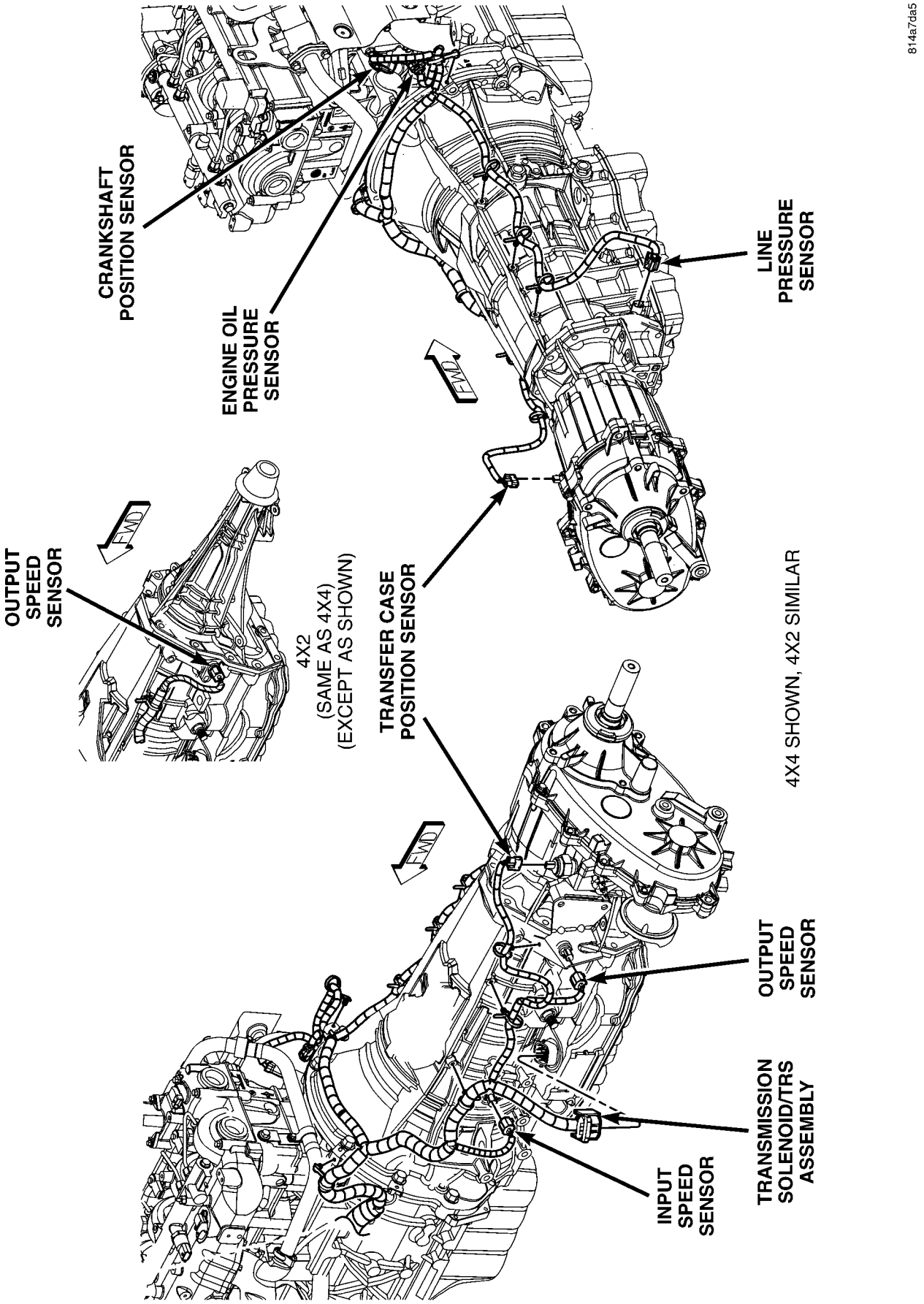

Fig. 24 TRANSMISSION

CONNECTOR/GROUND/SPLICE LOCATION (Continued)

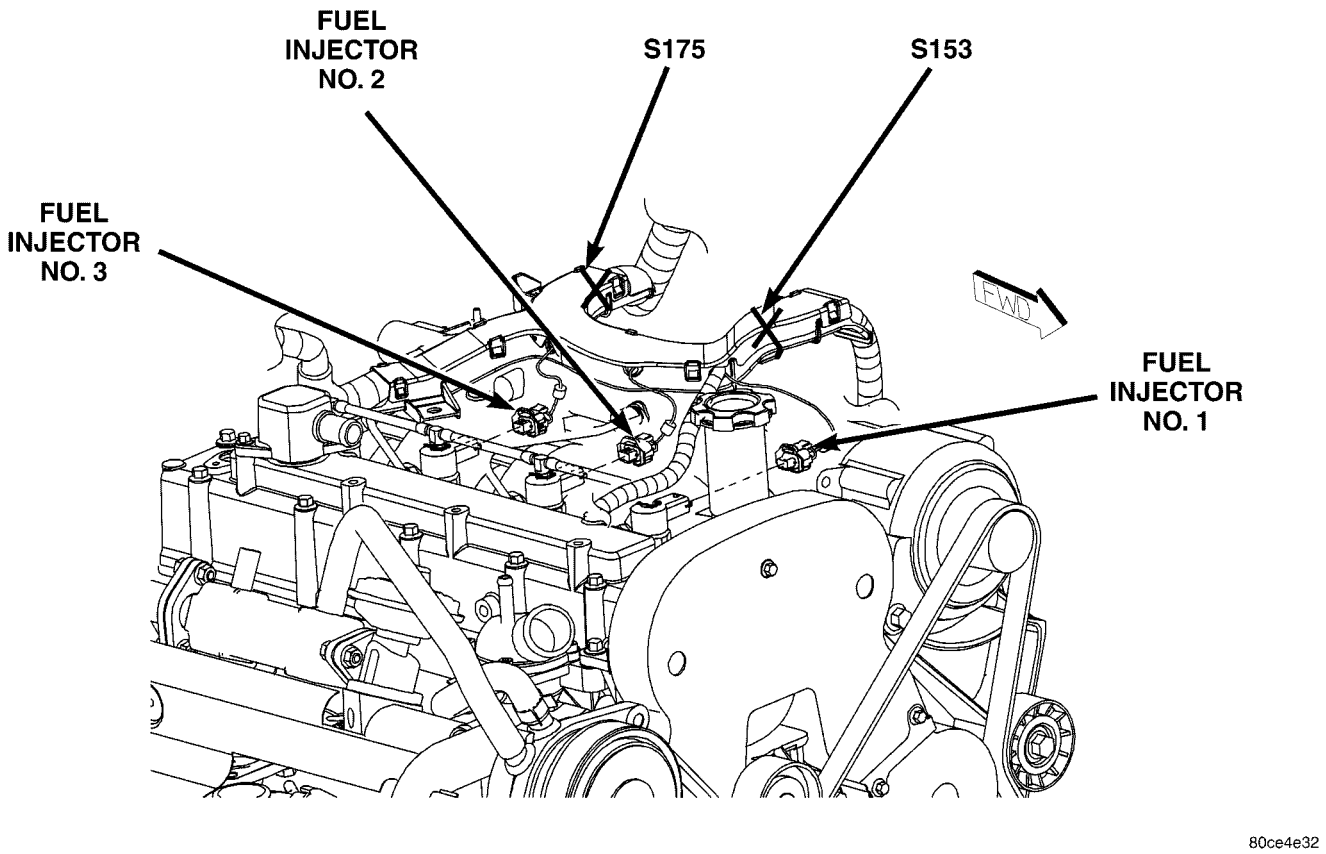

Fig. 25 TOP DIESEL ENGINE

CONNECTOR/GROUND/SPLICE LOCATION (Continued)

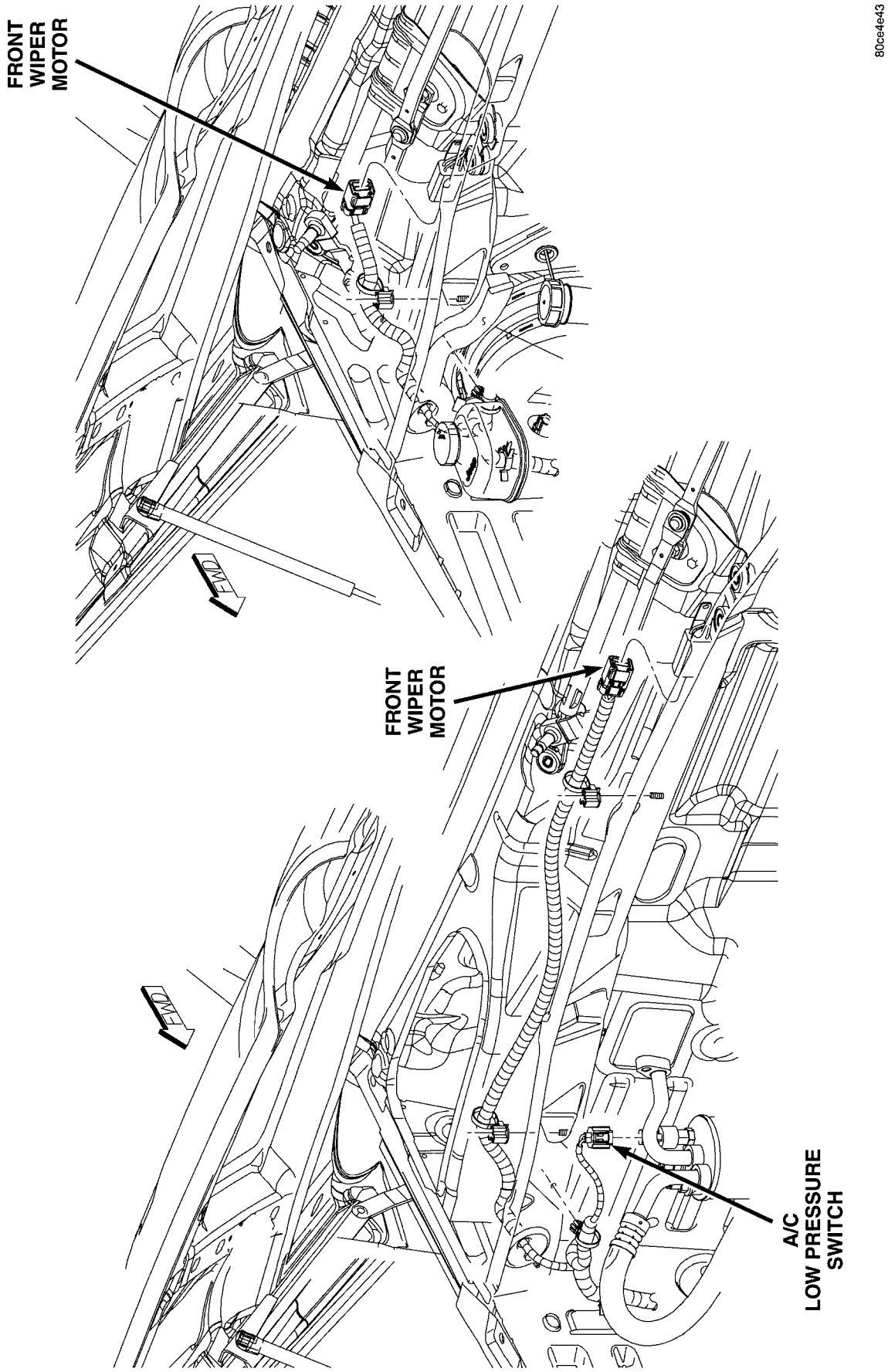

Fig. 26 LEFT SIDE ENGINE COMPARTMENT

CONNECTOR/GROUND/SPLICE LOCATION (Continued)

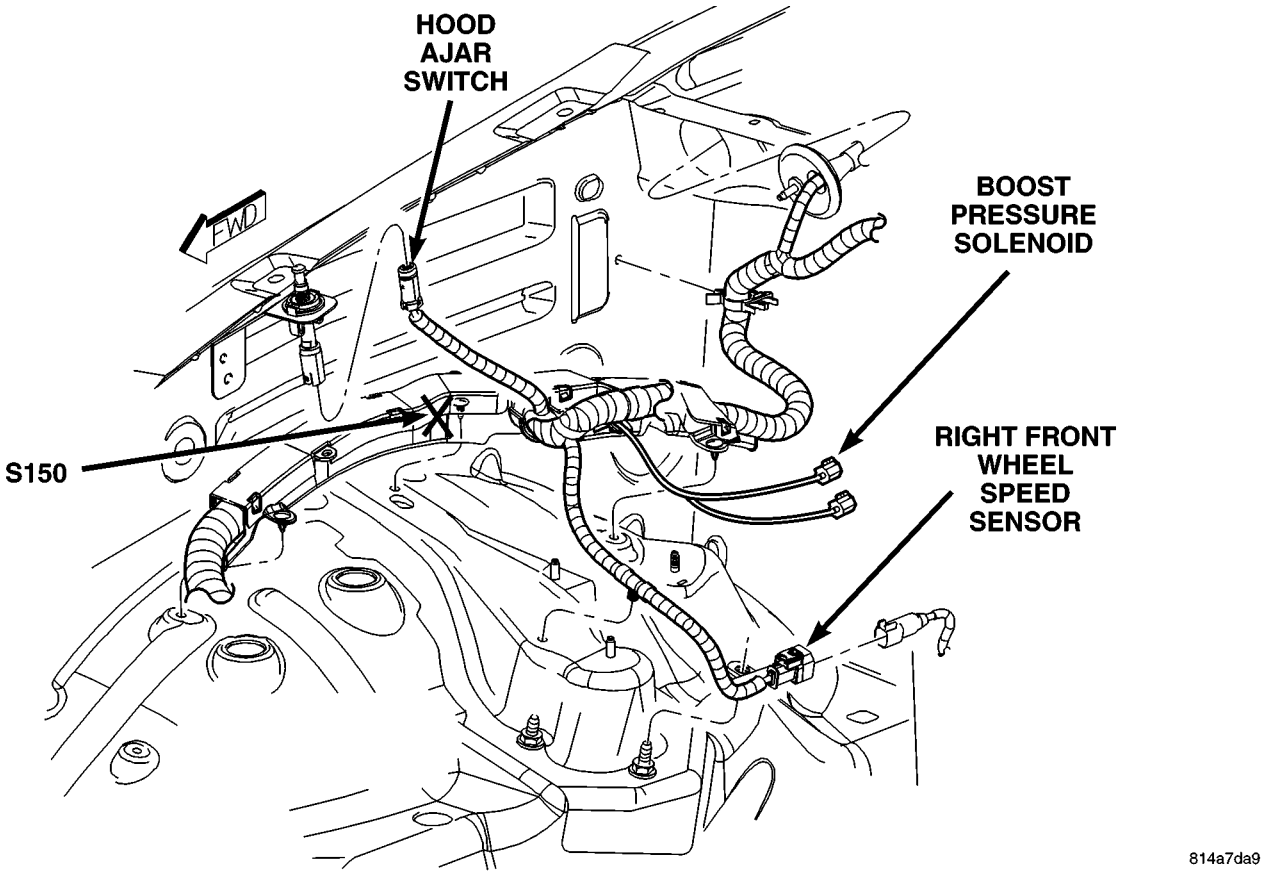

Fig. 27 RIGHT SIDE ENGINE COMPARTMENT

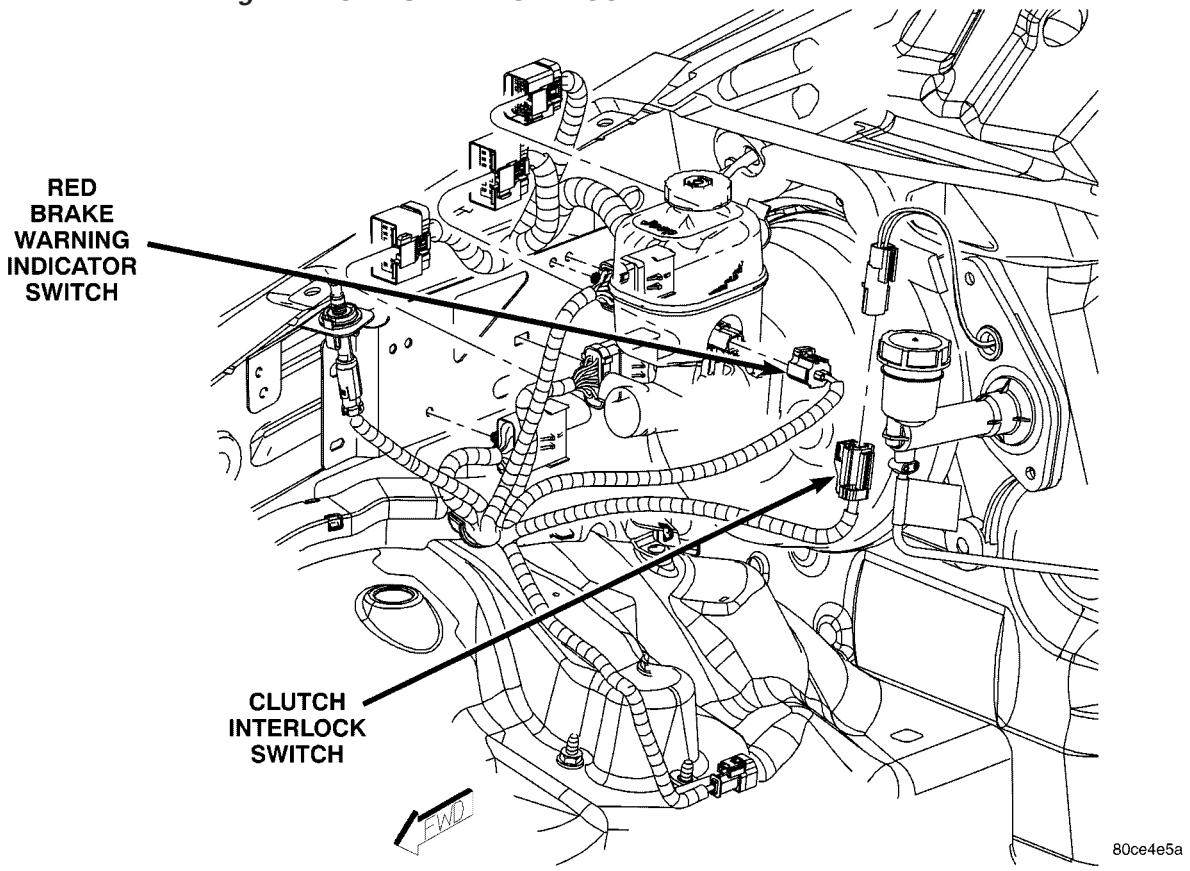

Fig. 28 RIGHT SIDE ENGINE COMPARTMENT, RHD

CONNECTOR/GROUND/SPLICE LOCATION (Continued)

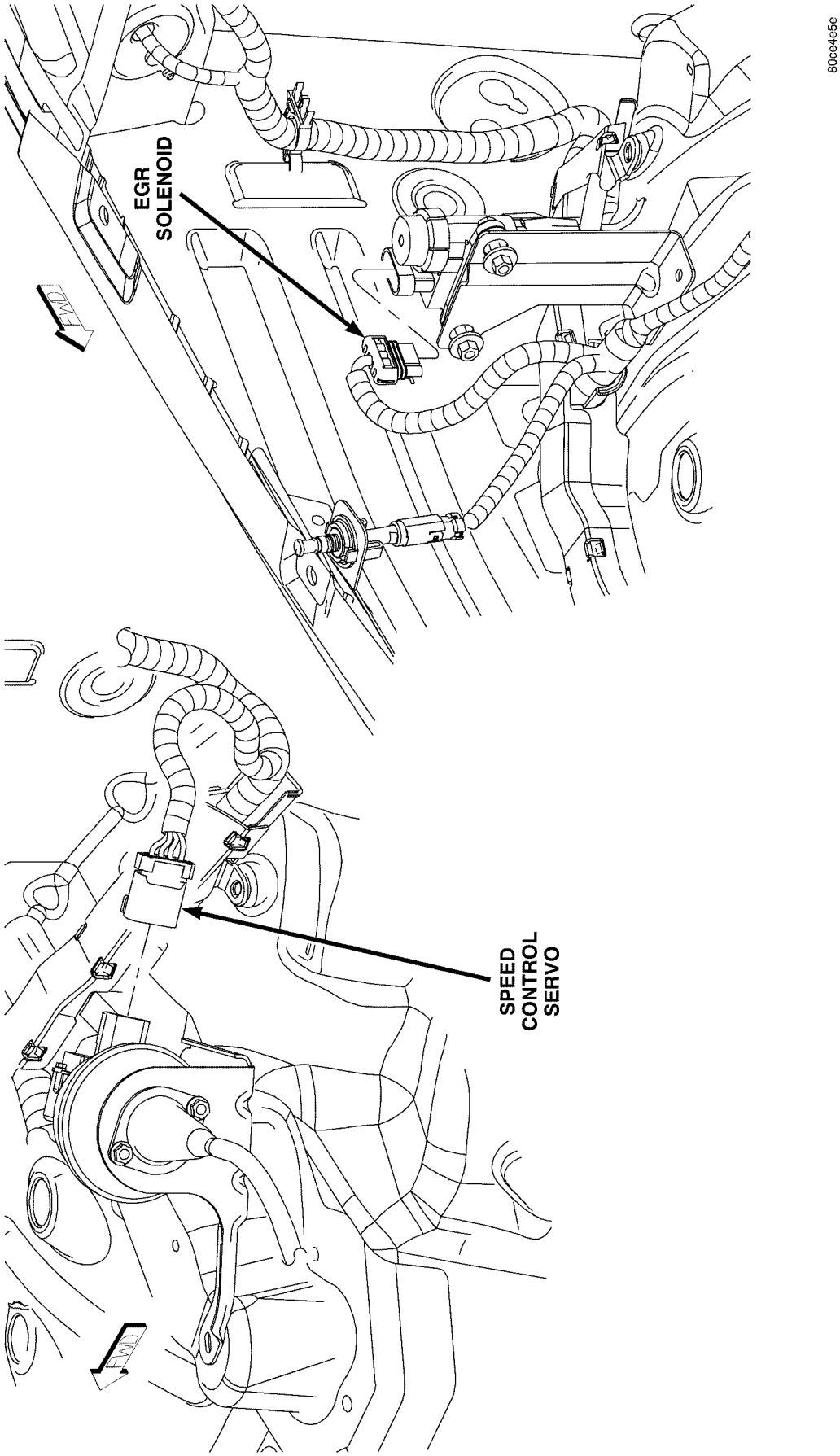

Fig. 29 ENGINE COMPARTMENT

CONNECTOR/GROUND/SPLICE LOCATION (Continued)

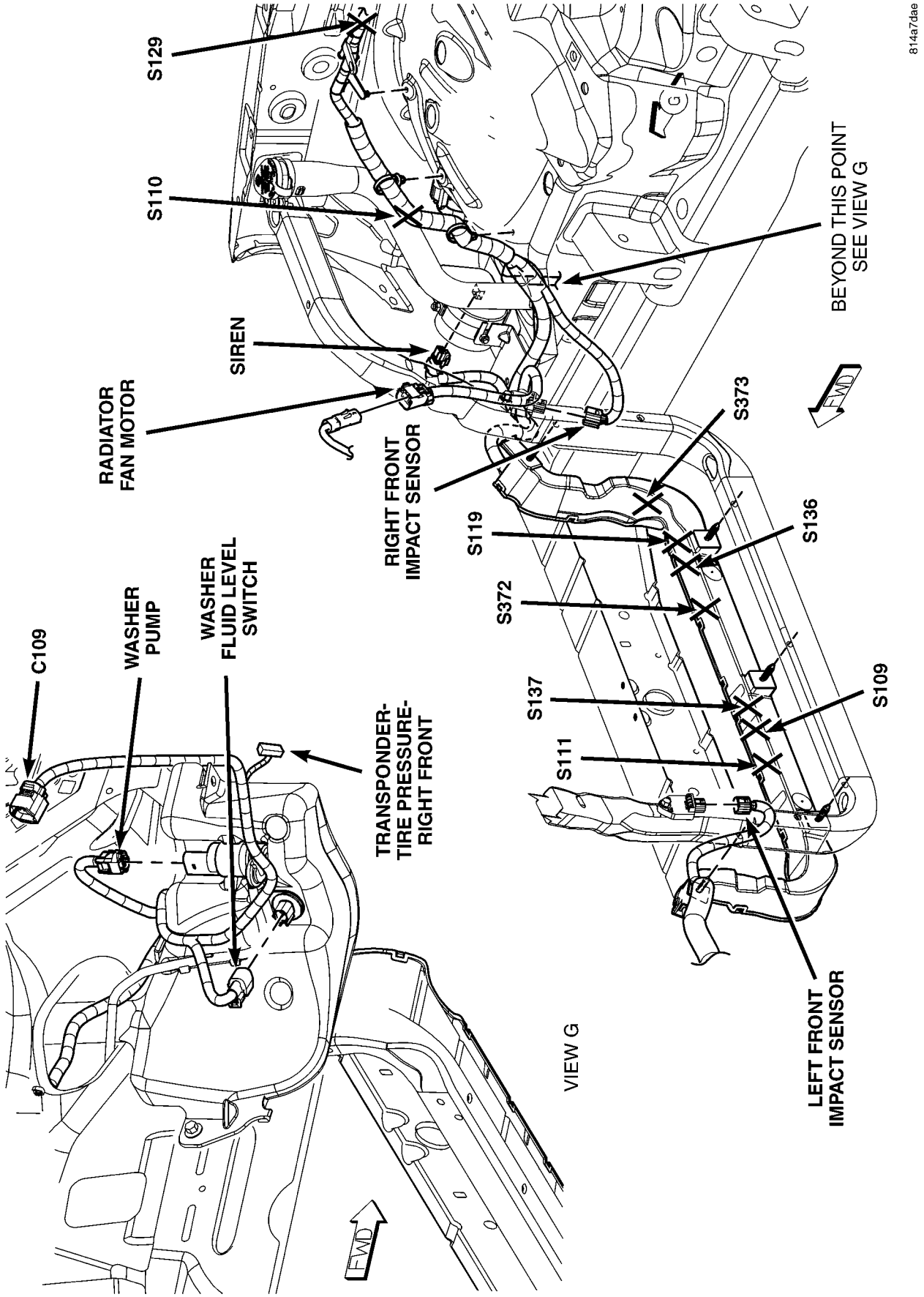

Fig. 30 ENGINE COMPARTMENT

CONNECTOR/GROUND/SPLICE LOCATION (Continued)

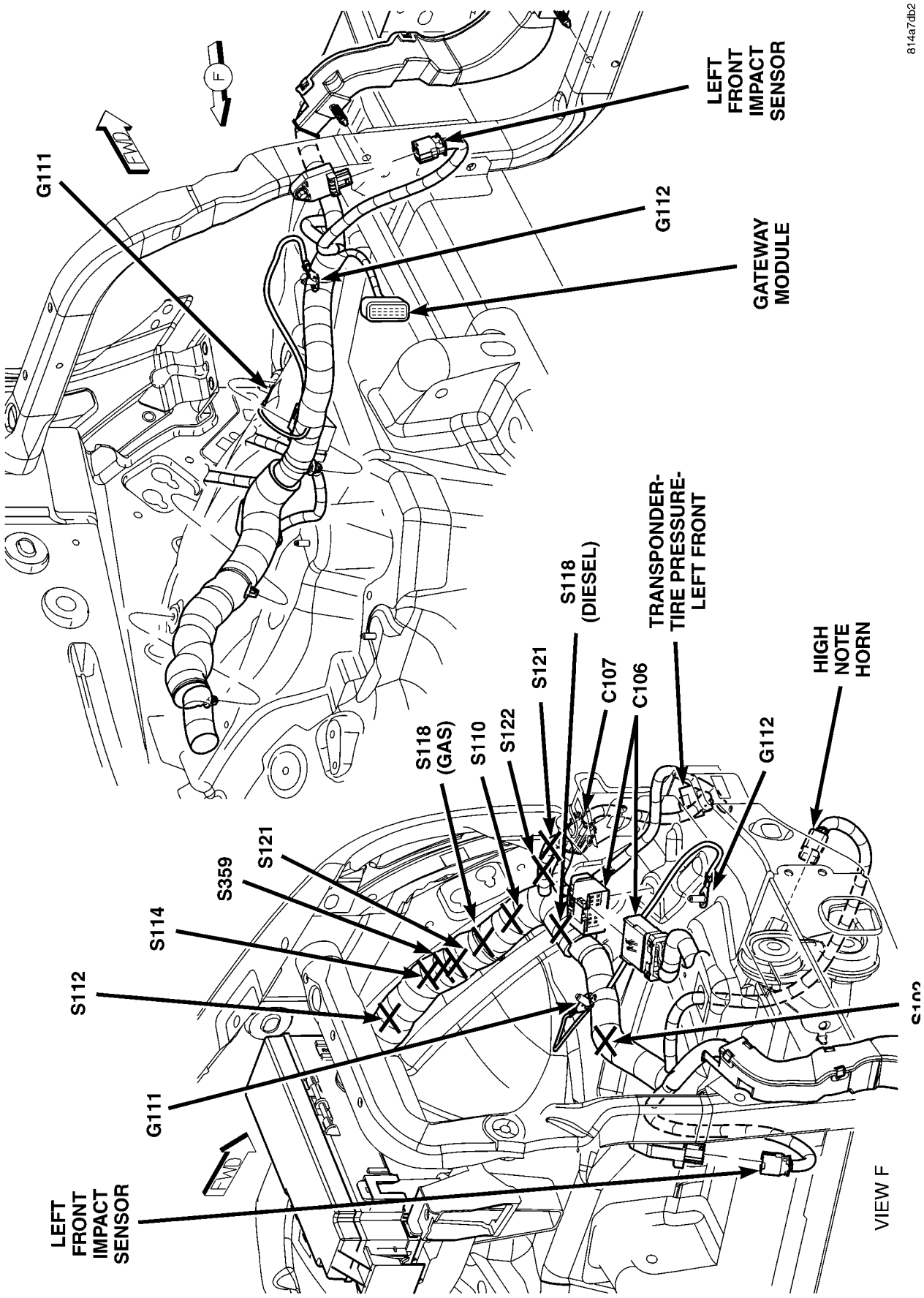

Fig. 31 FRONT ENGINE COMPARTMENT

CONNECTOR/GROUND/SPLICE LOCATION (Continued)

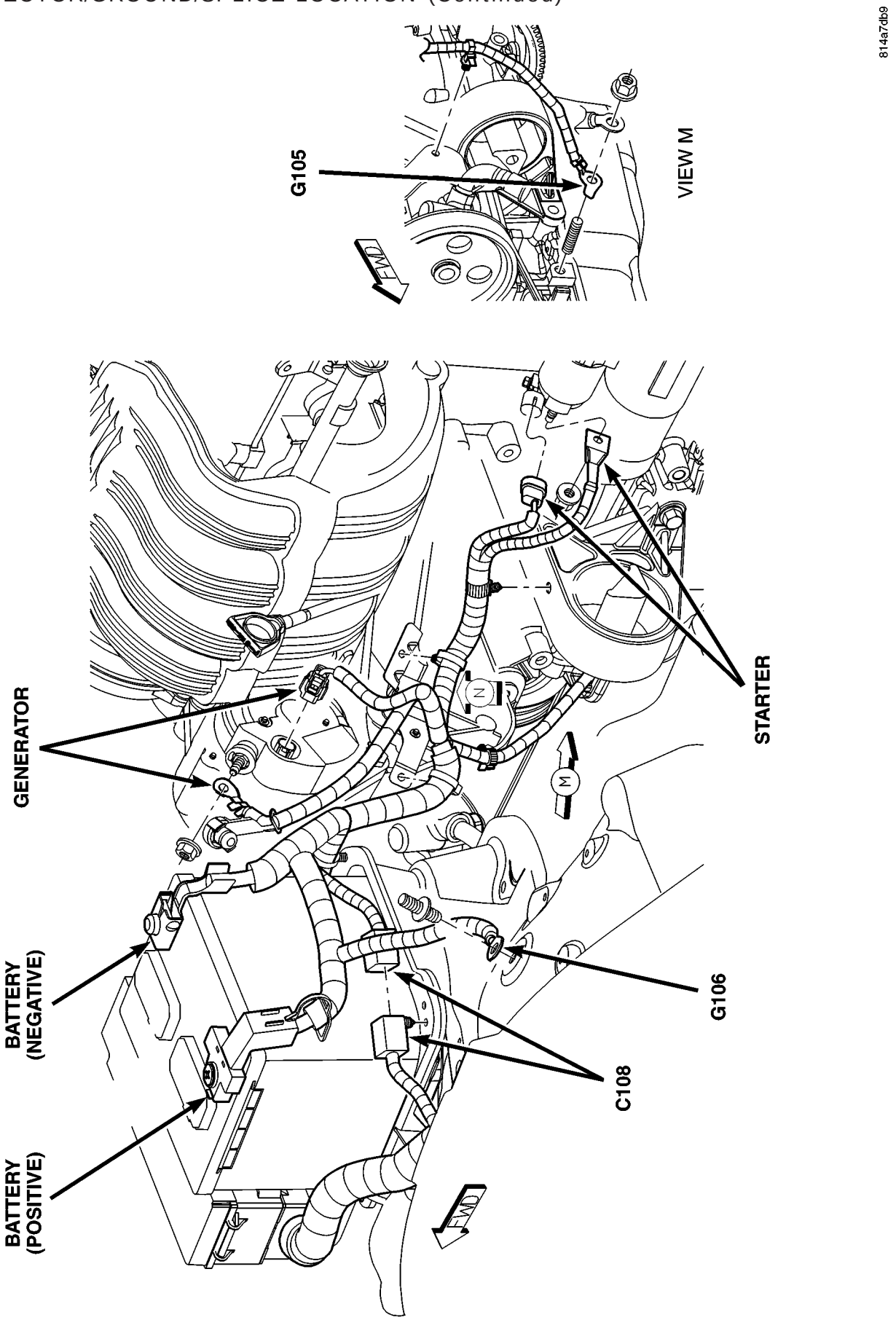

Fig. 32 LEFT FRONT ENGINE COMPARTMENT (GAS)

CONNECTOR/GROUND/SPLICE LOCATION (Continued)

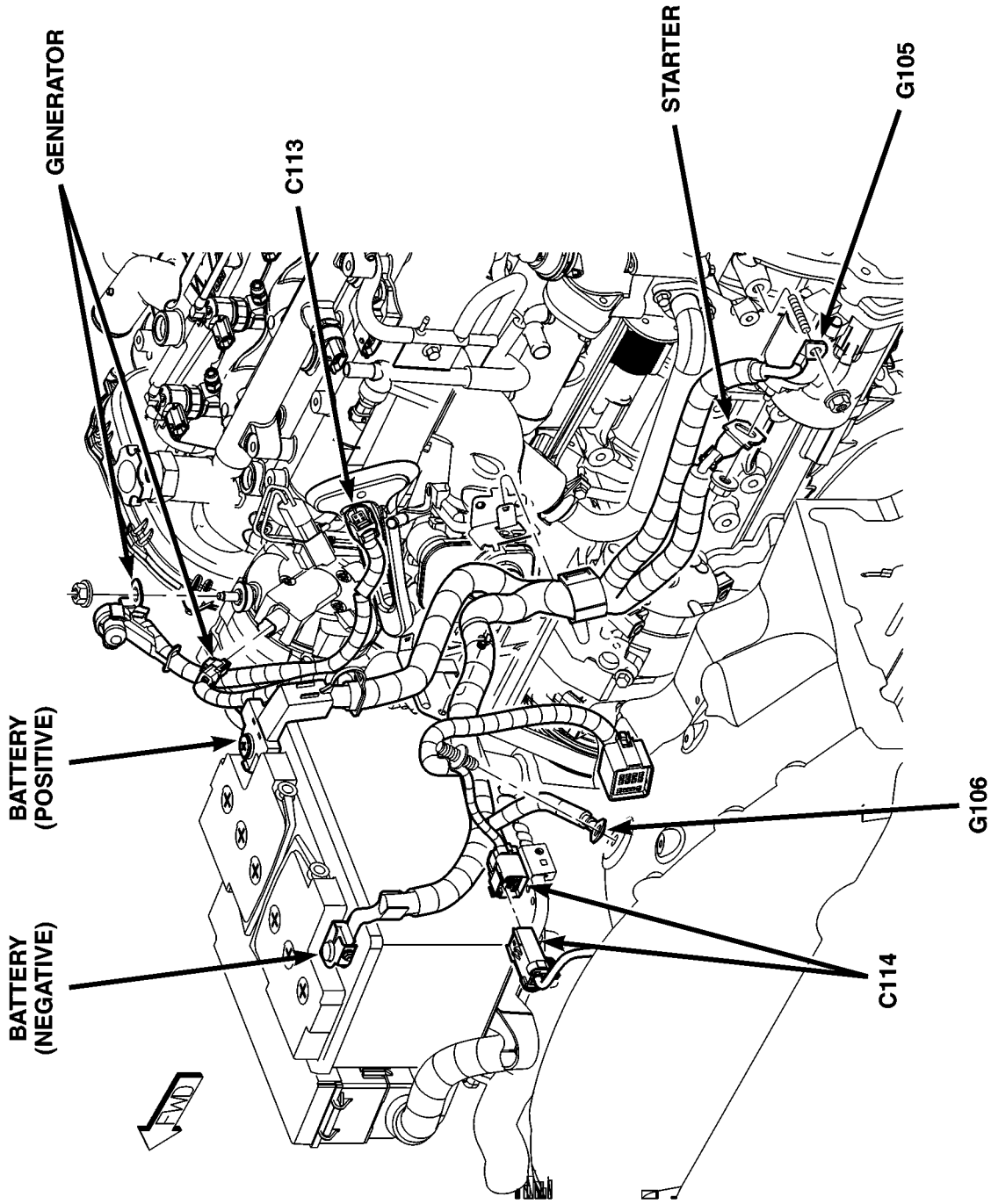

Fig. 33 LEFT FRONT ENGINE COMPARTMENT (DIESEL)

CONNECTOR/GROUND/SPLICE LOCATION (Continued)

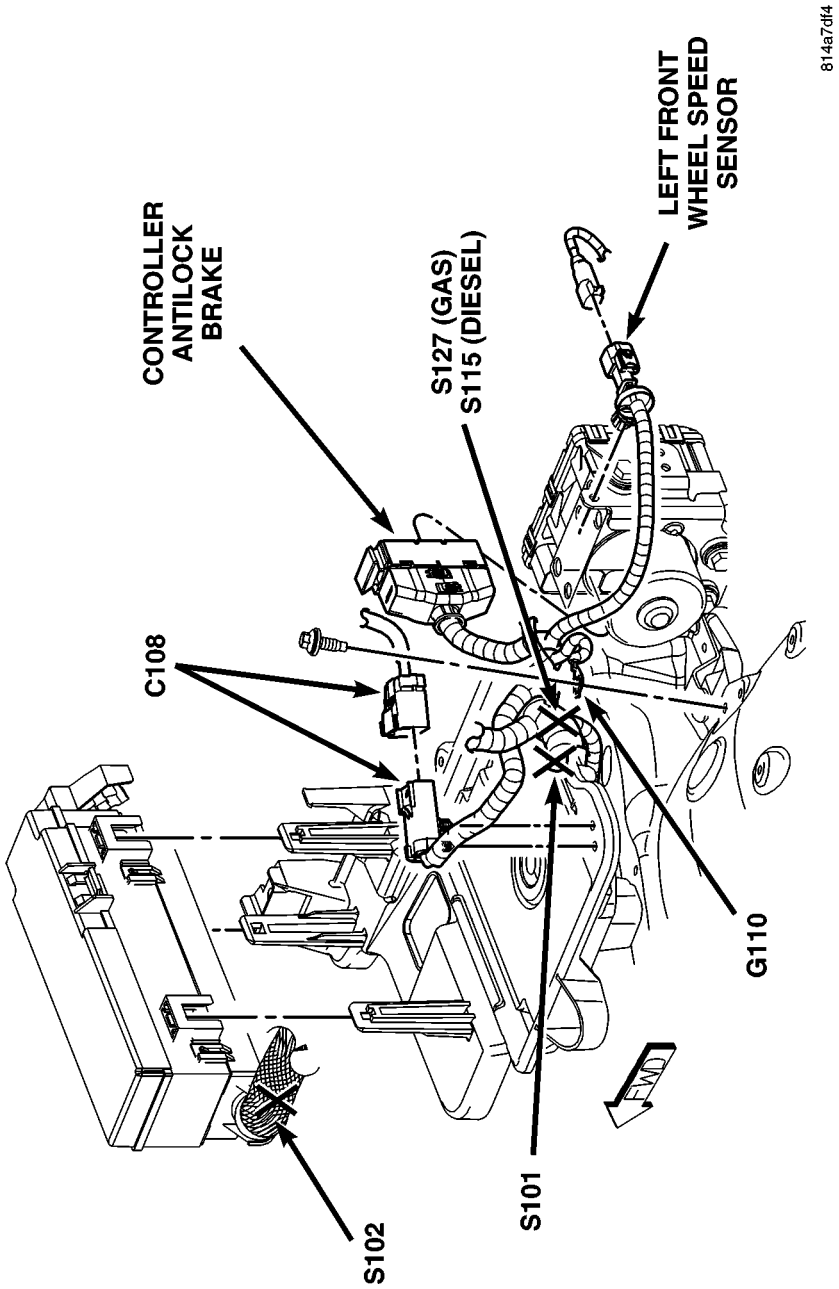

Fig. 34 LEFT SIDE ENGINE COMPARTMENT

CONNECTOR/GROUND/SPLICE LOCATION (Continued)

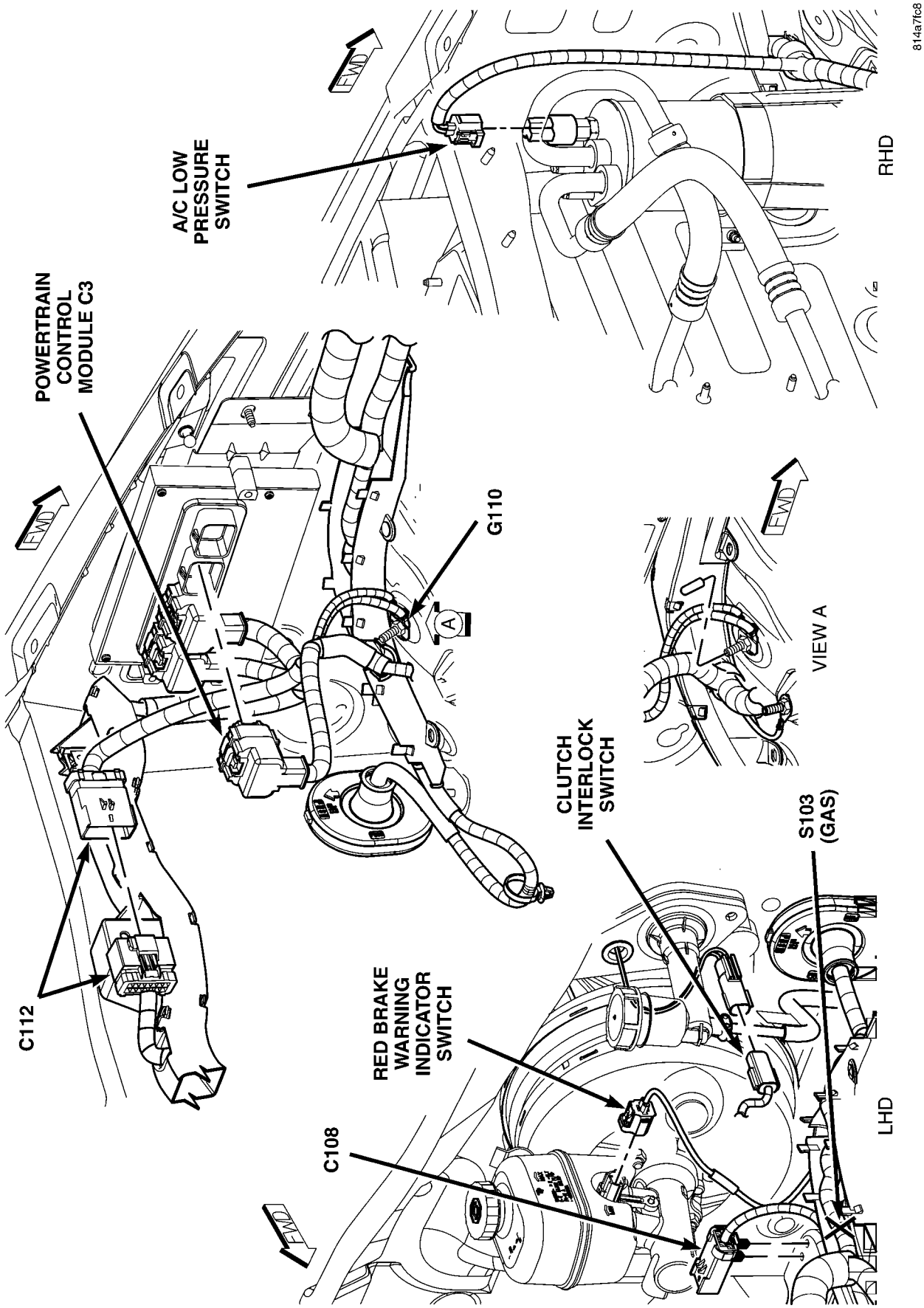

Fig. 35 REAR ENGINE COMPARTMENT, RHD

CONNECTOR/GROUND/SPLICE LOCATION (Continued)

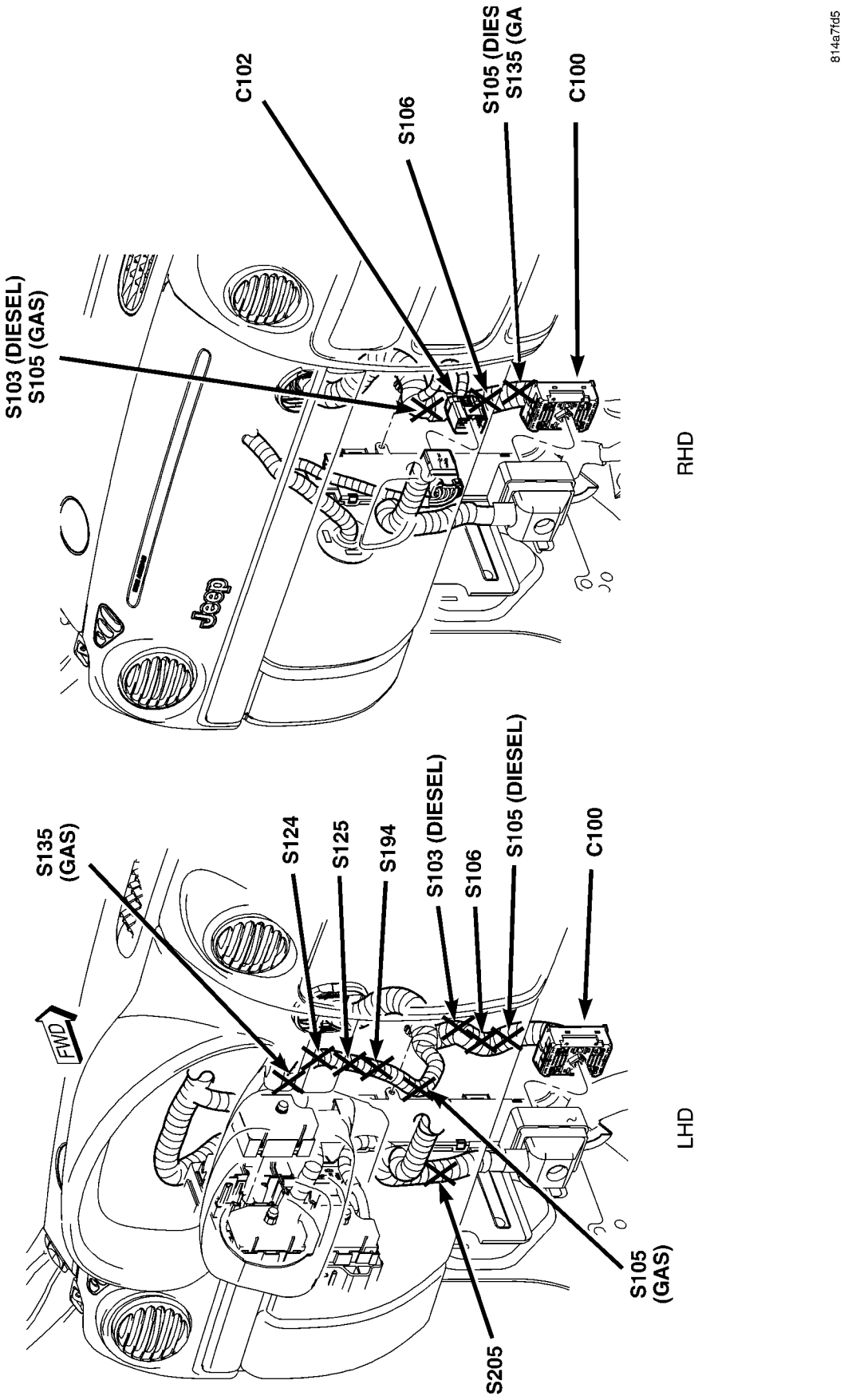

Fig. 36 ENGINE TO INSTRUMENT PANEL

CONNECTOR/GROUND/SPLICE LOCATION (Continued)

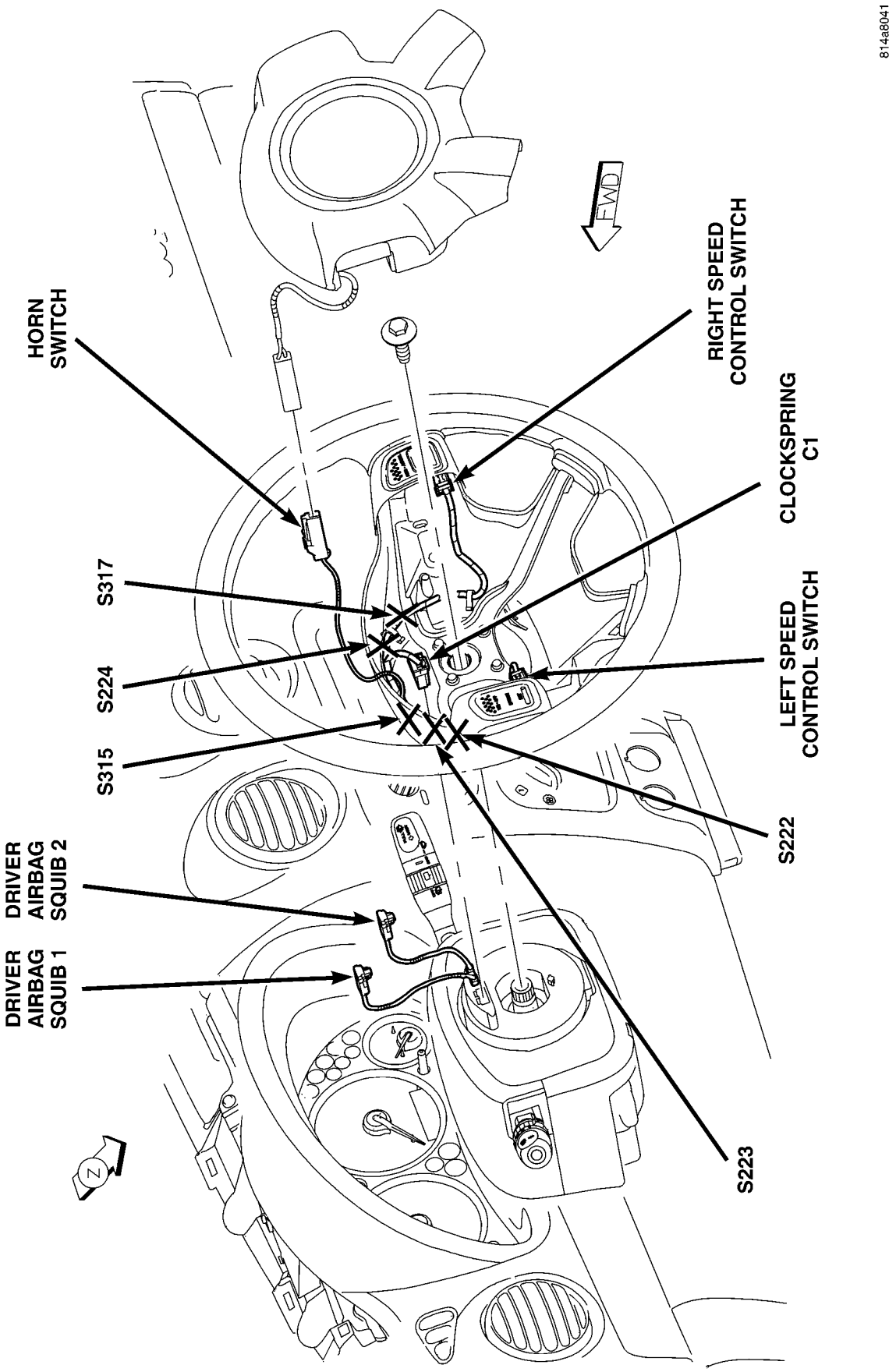

Fig. 37 STEERING WHEEL

CONNECTOR/GROUND/SPLICE LOCATION (Continued)

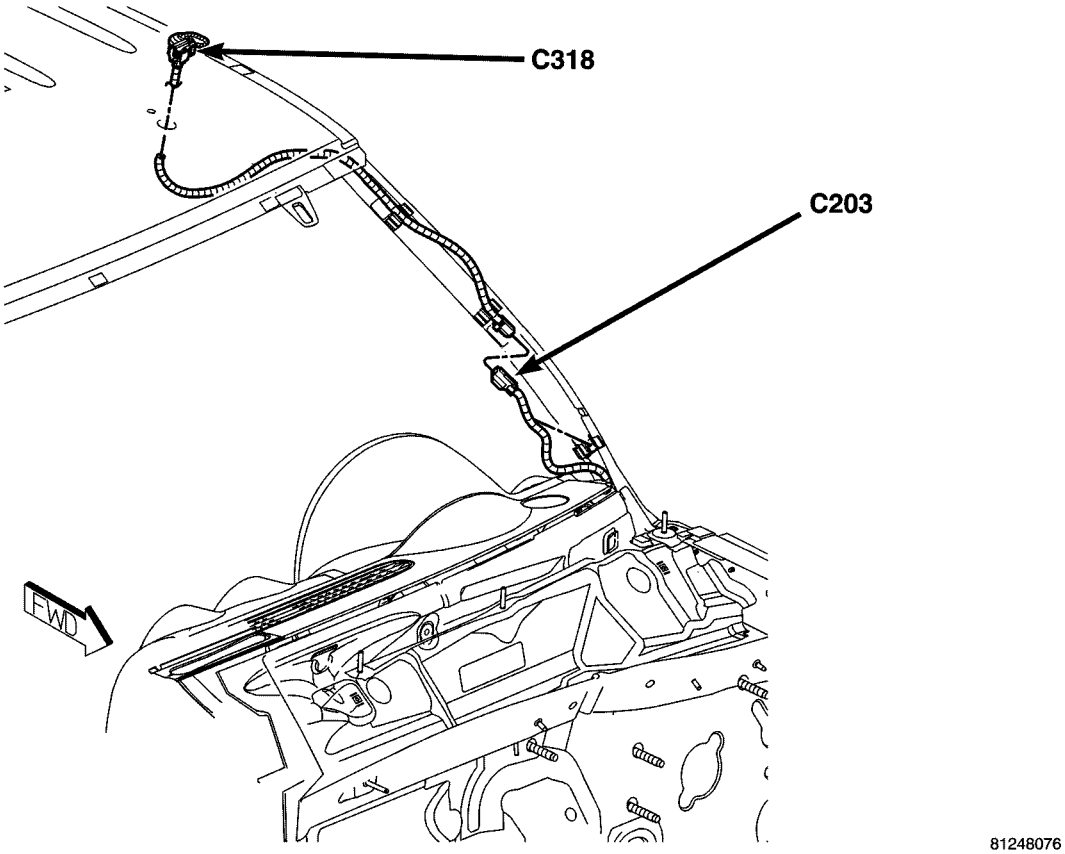

Fig. 38 LEFT A POST

CONNECTOR/GROUND/SPLICE LOCATION (Continued)

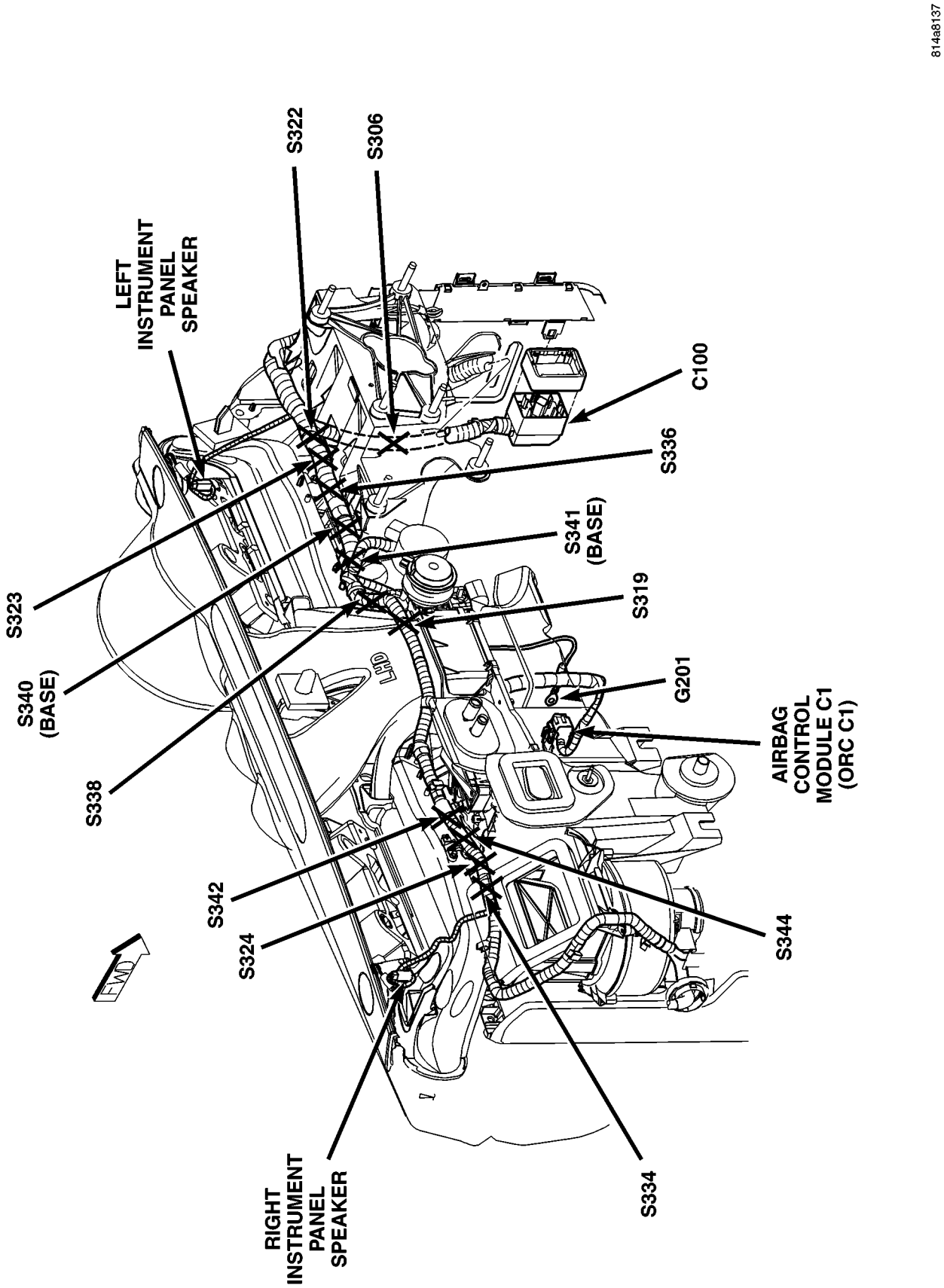

Fig. 39 INSTRUMENT PANEL, LHD

CONNECTOR/GROUND/SPLICE LOCATION (Continued)

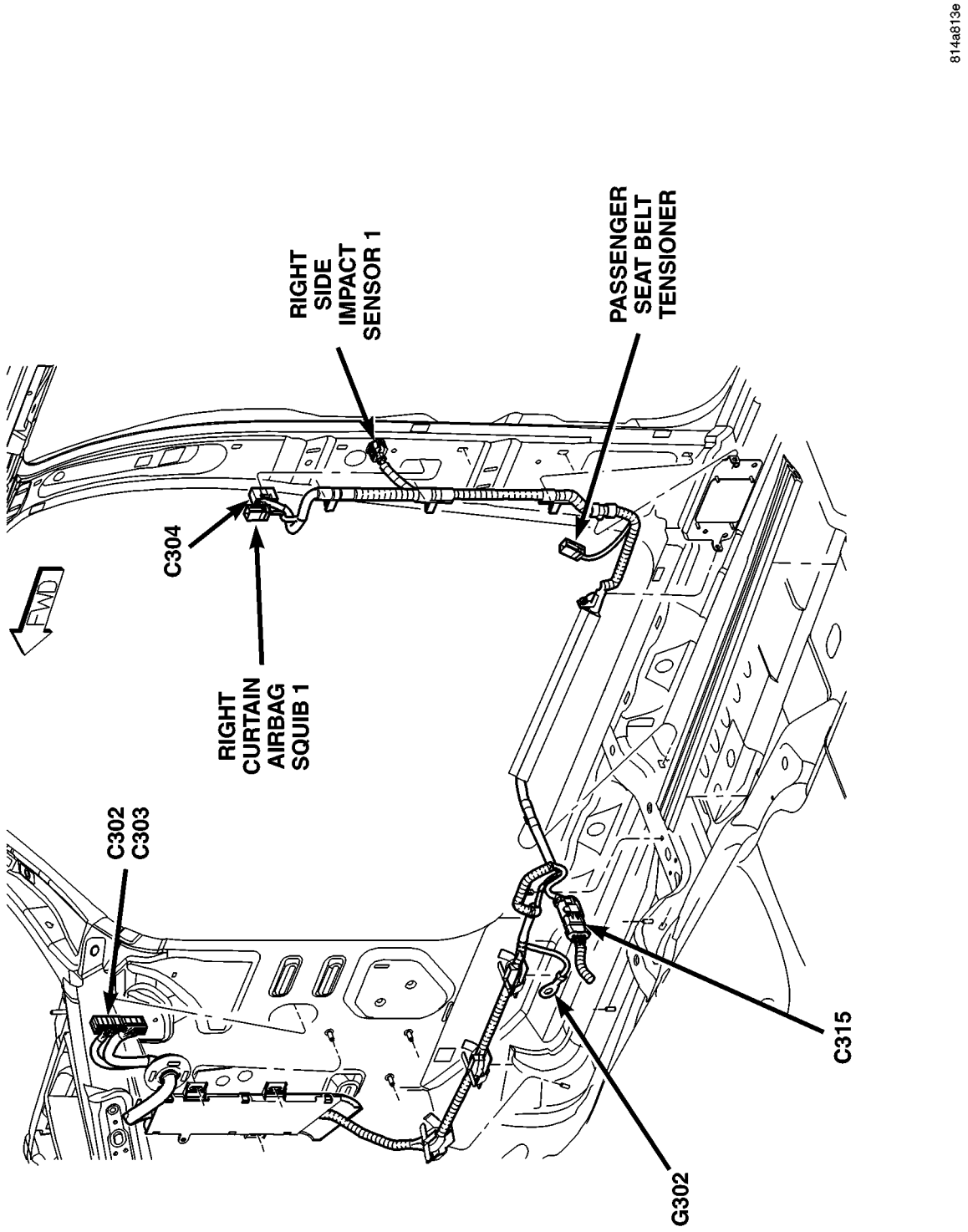

Fig. 40 RIGHT FRONT BODY, LHD

CONNECTOR/GROUND/SPLICE LOCATION (Continued)

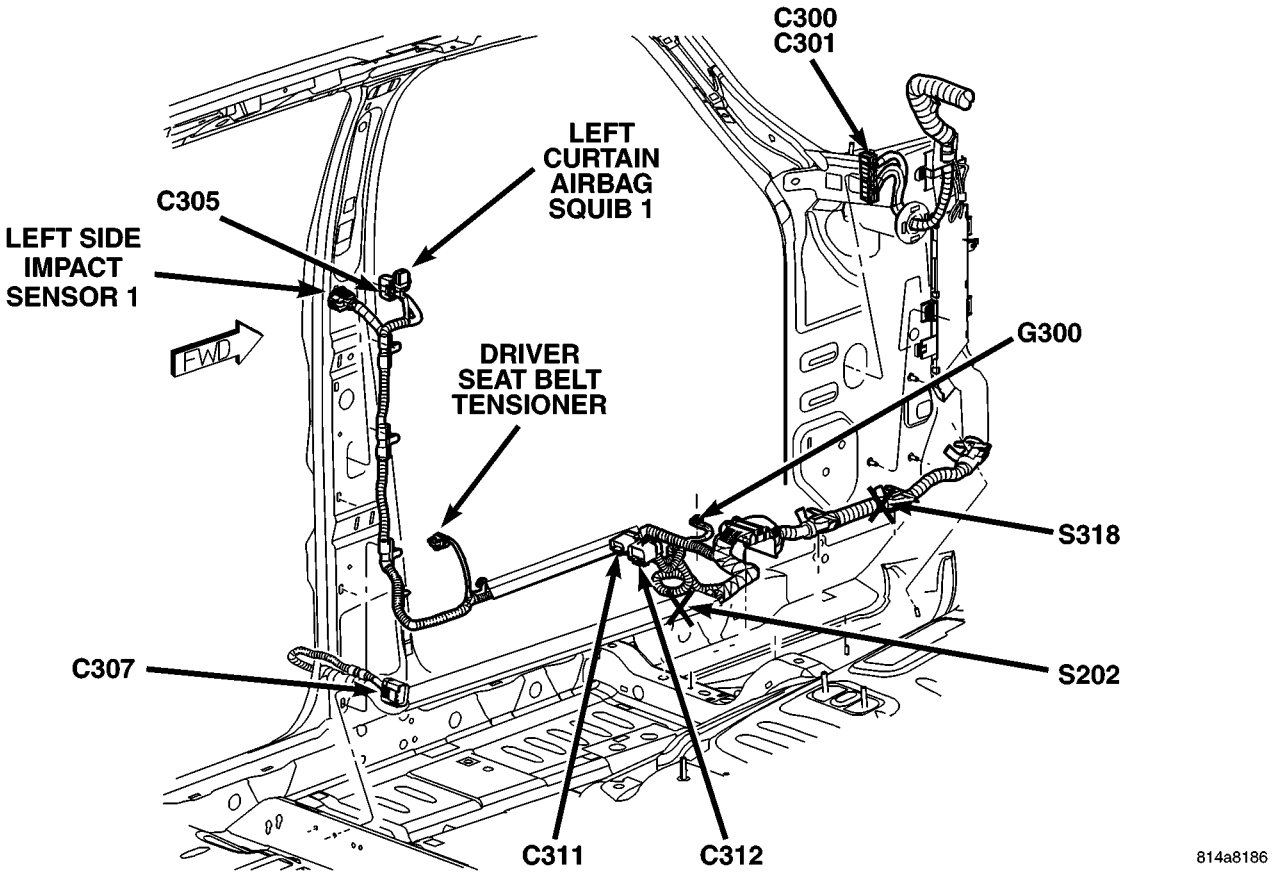

Fig. 41 LEFT FRONT BODY, LHD

CONNECTOR/GROUND/SPLICE LOCATION (Continued)

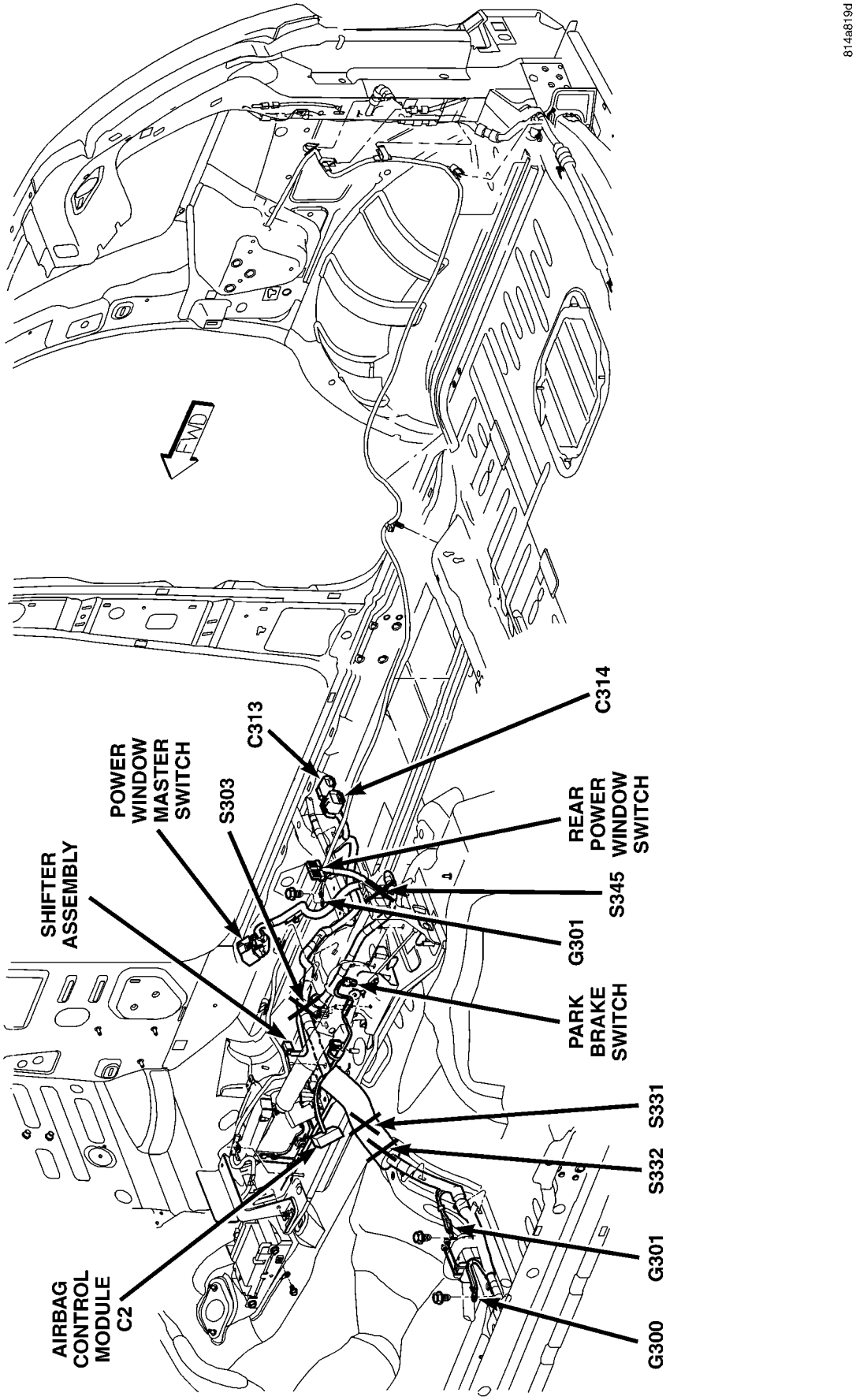

Fig. 42 RIGHT FRONT BODY, LHD

CONNECTOR/GROUND/SPLICE LOCATION (Continued)

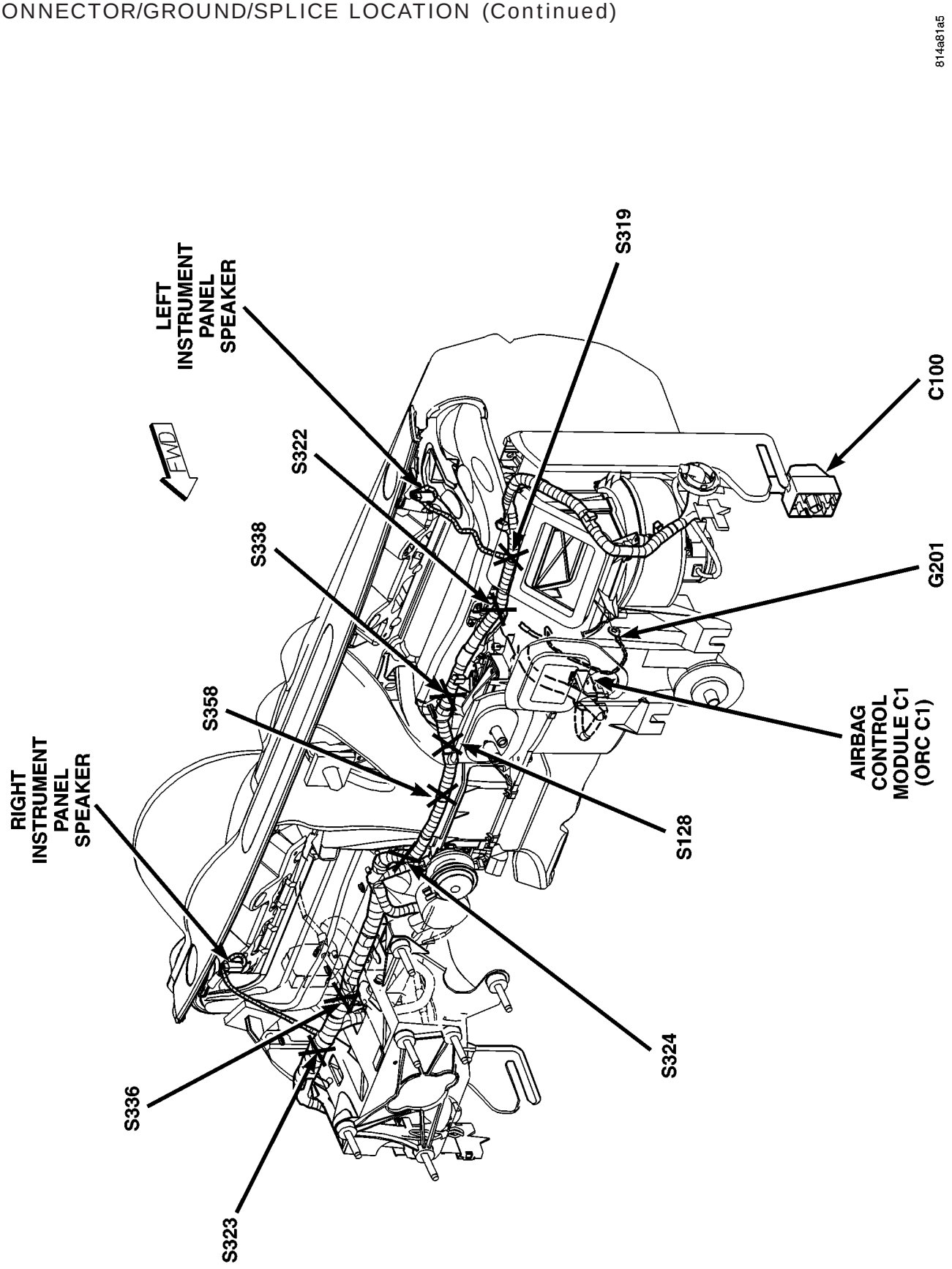

Fig. 43 INSTRUMENT PANEL, RHD

CONNECTOR/GROUND/SPLICE LOCATION (Continued)

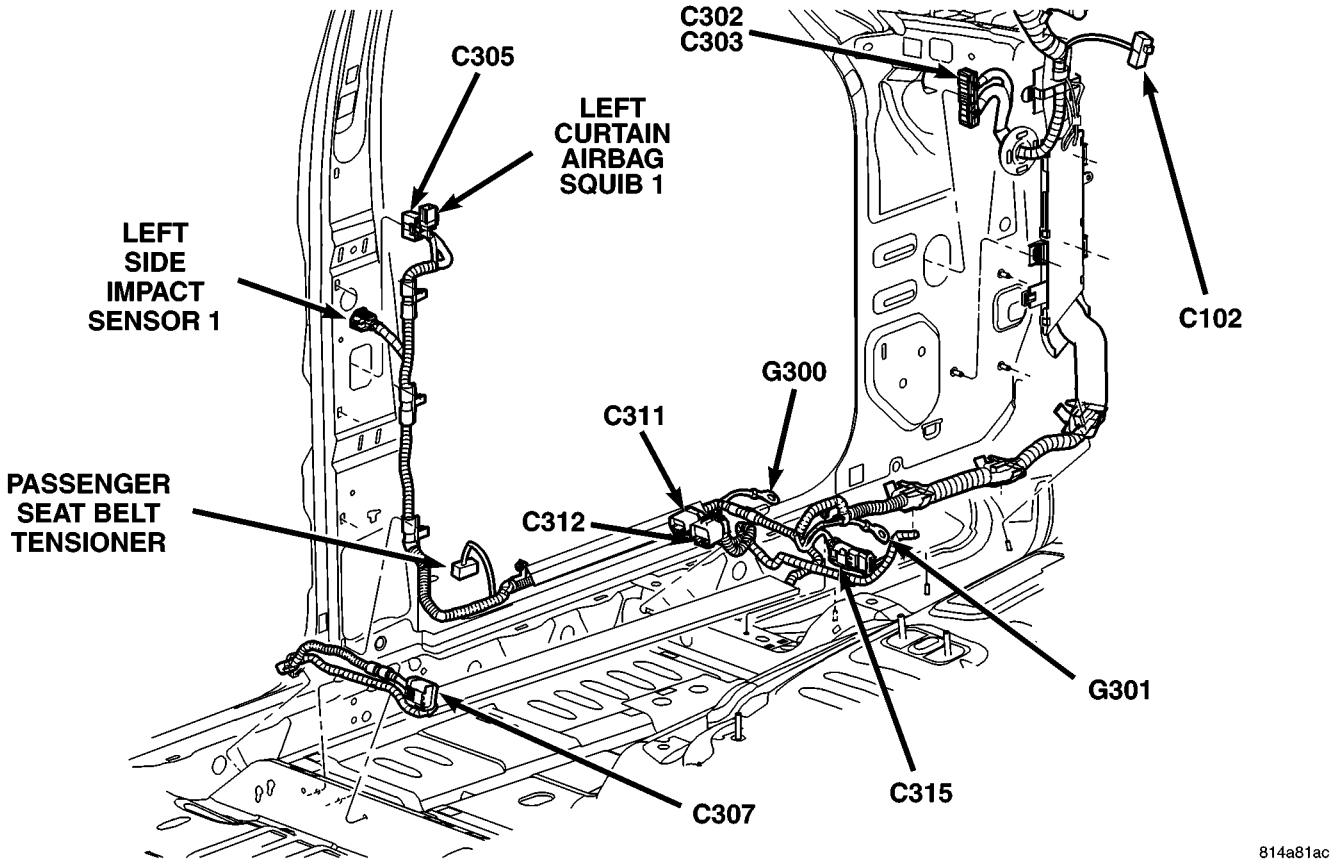

Fig. 44 LEFT FRONT BODY, RHD

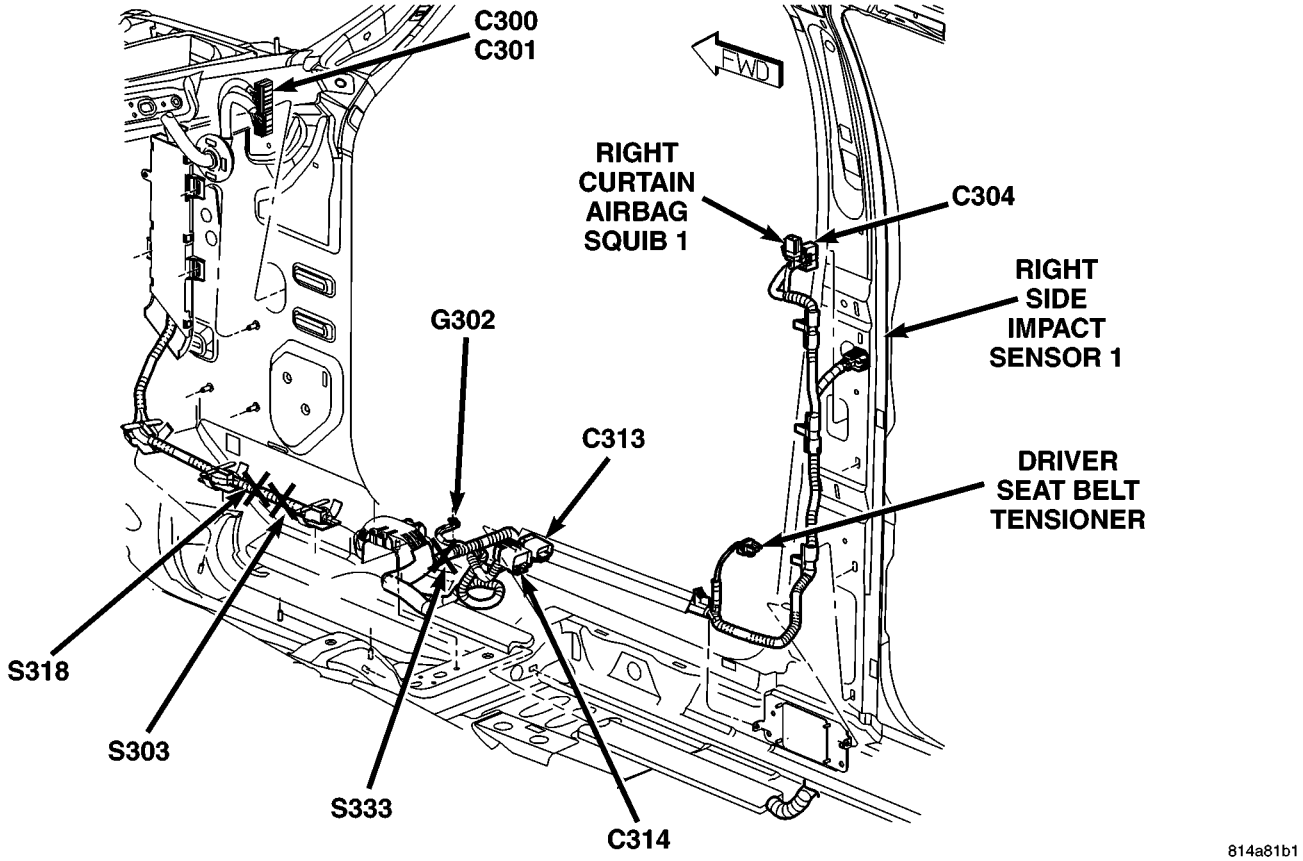

Fig. 45 RIGHT FRONT BODY, RHD

CONNECTOR/GROUND/SPLICE LOCATION (Continued)

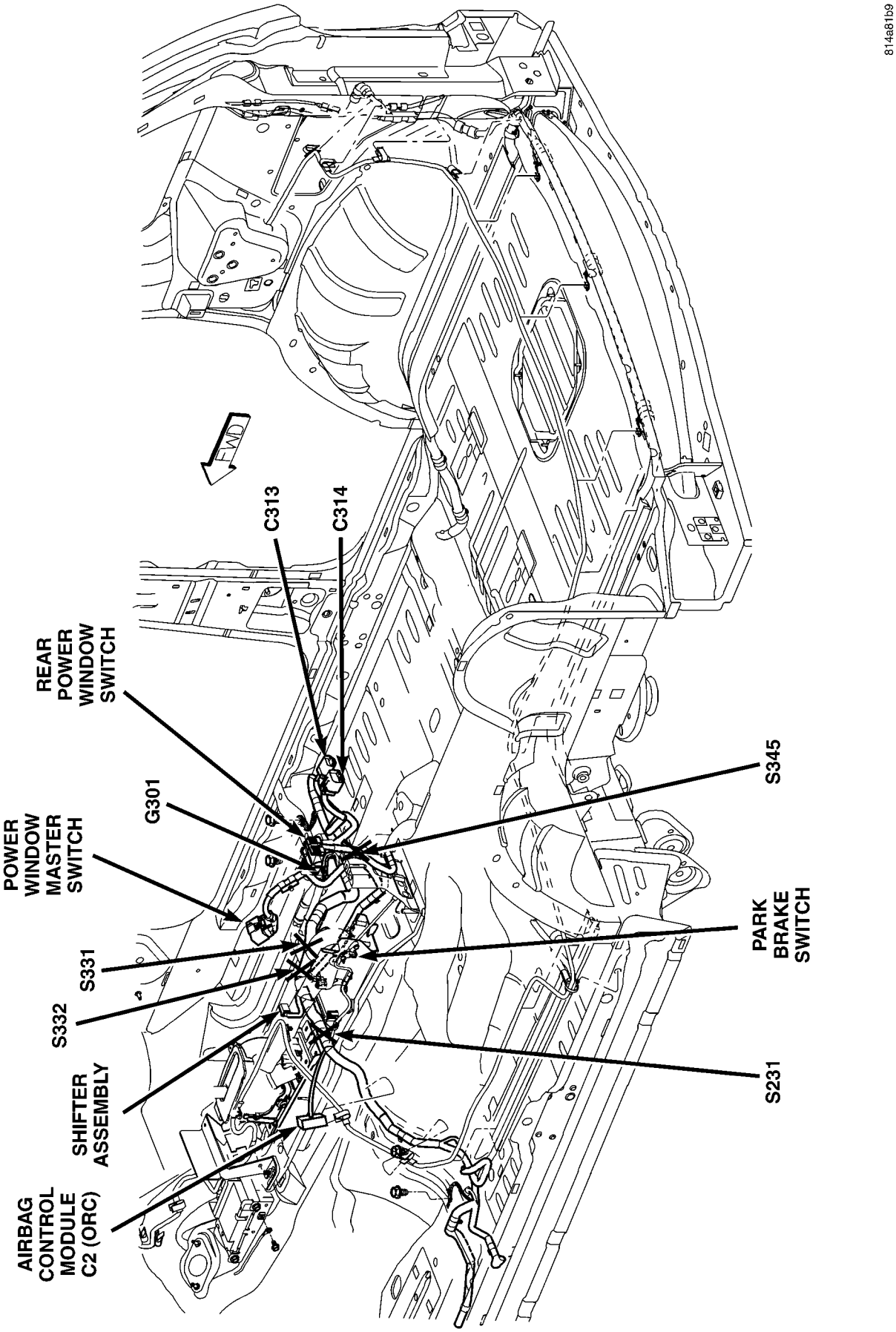

Fig. 46 RIGHT FRONT BODY, RHD

CONNECTOR/GROUND/SPLICE LOCATION (Continued)

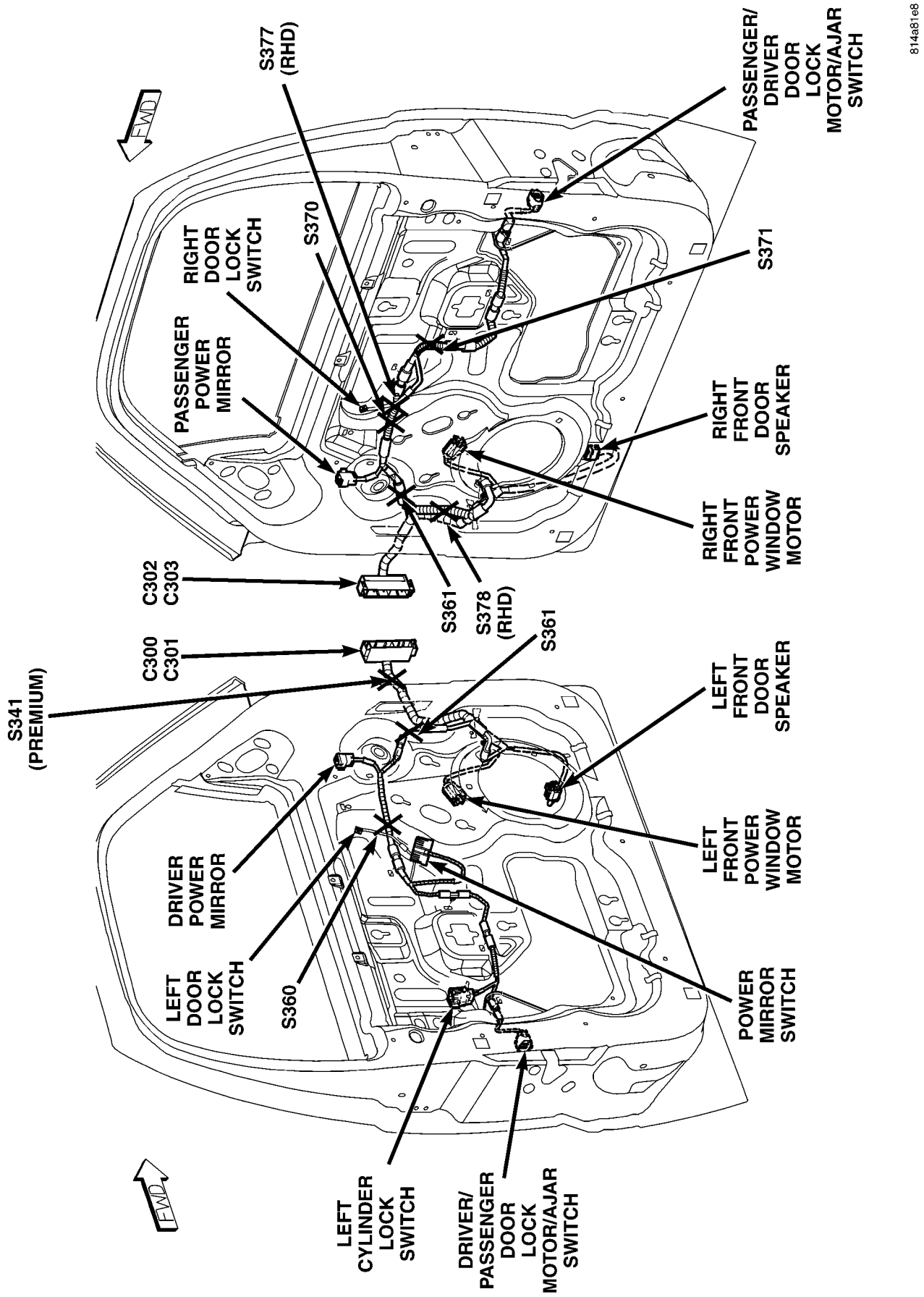

Fig. 47 FRONT DOORS

CONNECTOR/GROUND/SPLICE LOCATION (Continued)

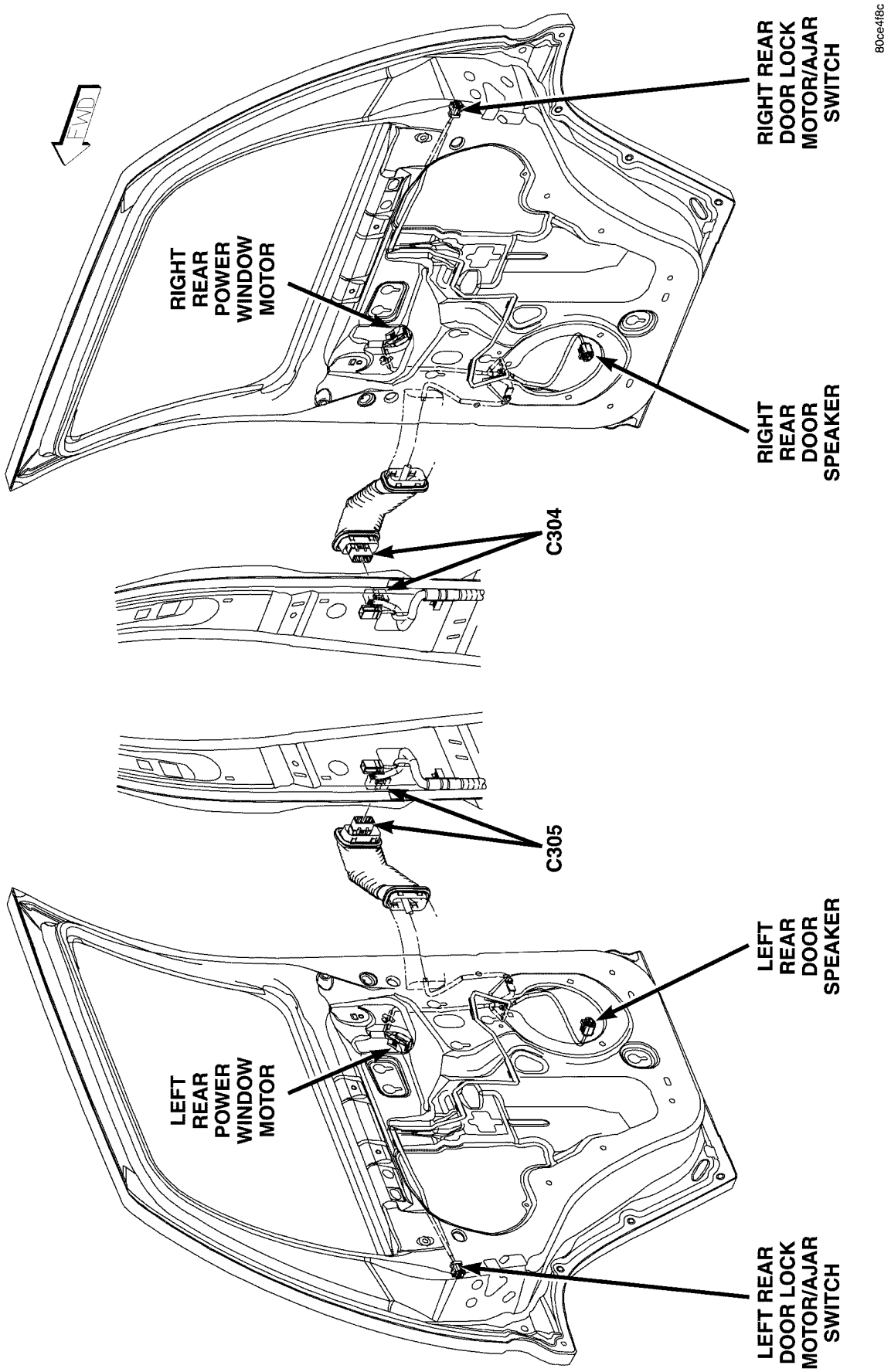

Fig. 48 REAR DOOR

CONNECTOR/GROUND/SPLICE LOCATION (Continued)

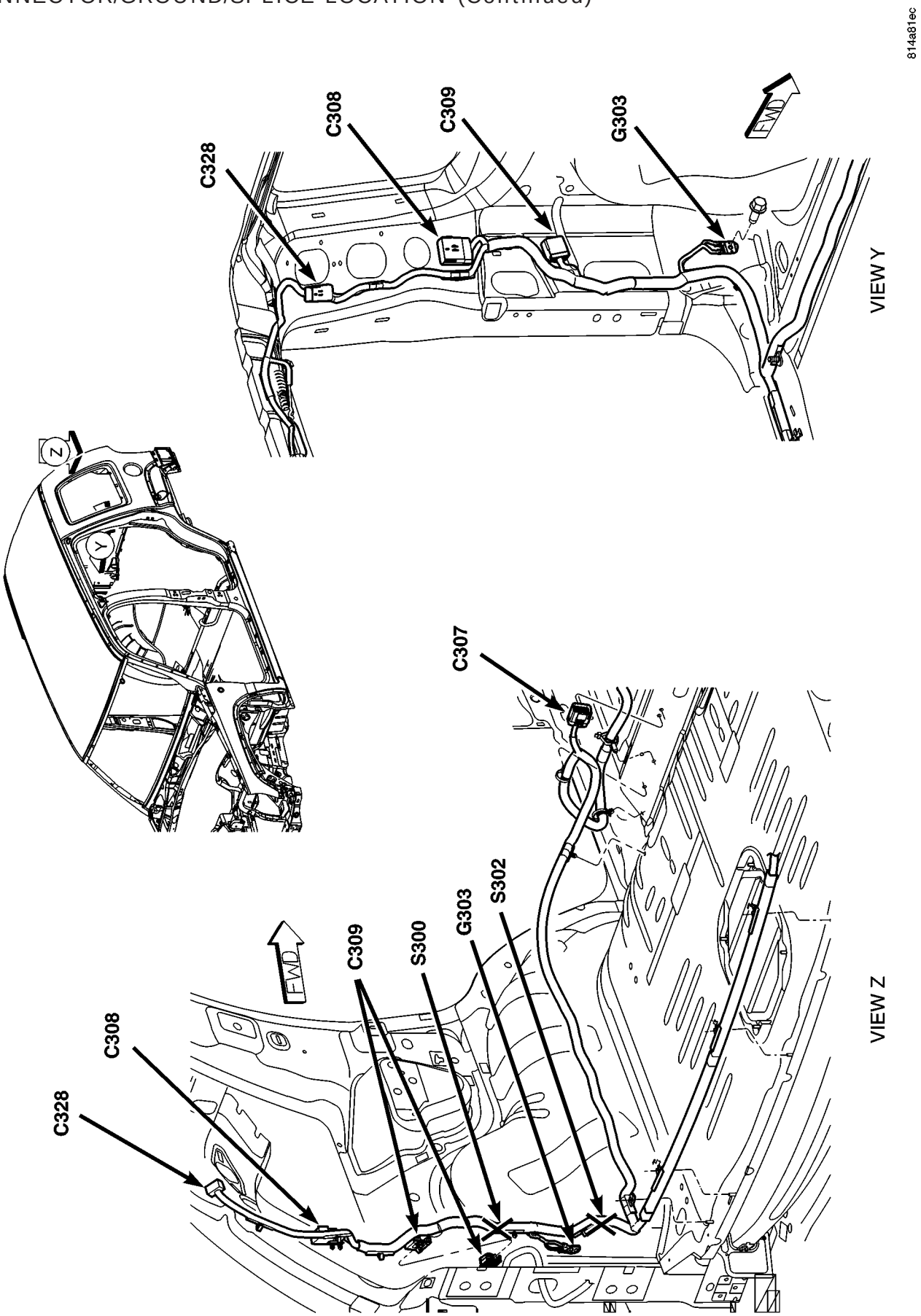

Fig. 49 LEFT REAR BODY

CONNECTOR/GROUND/SPLICE LOCATION (Continued)

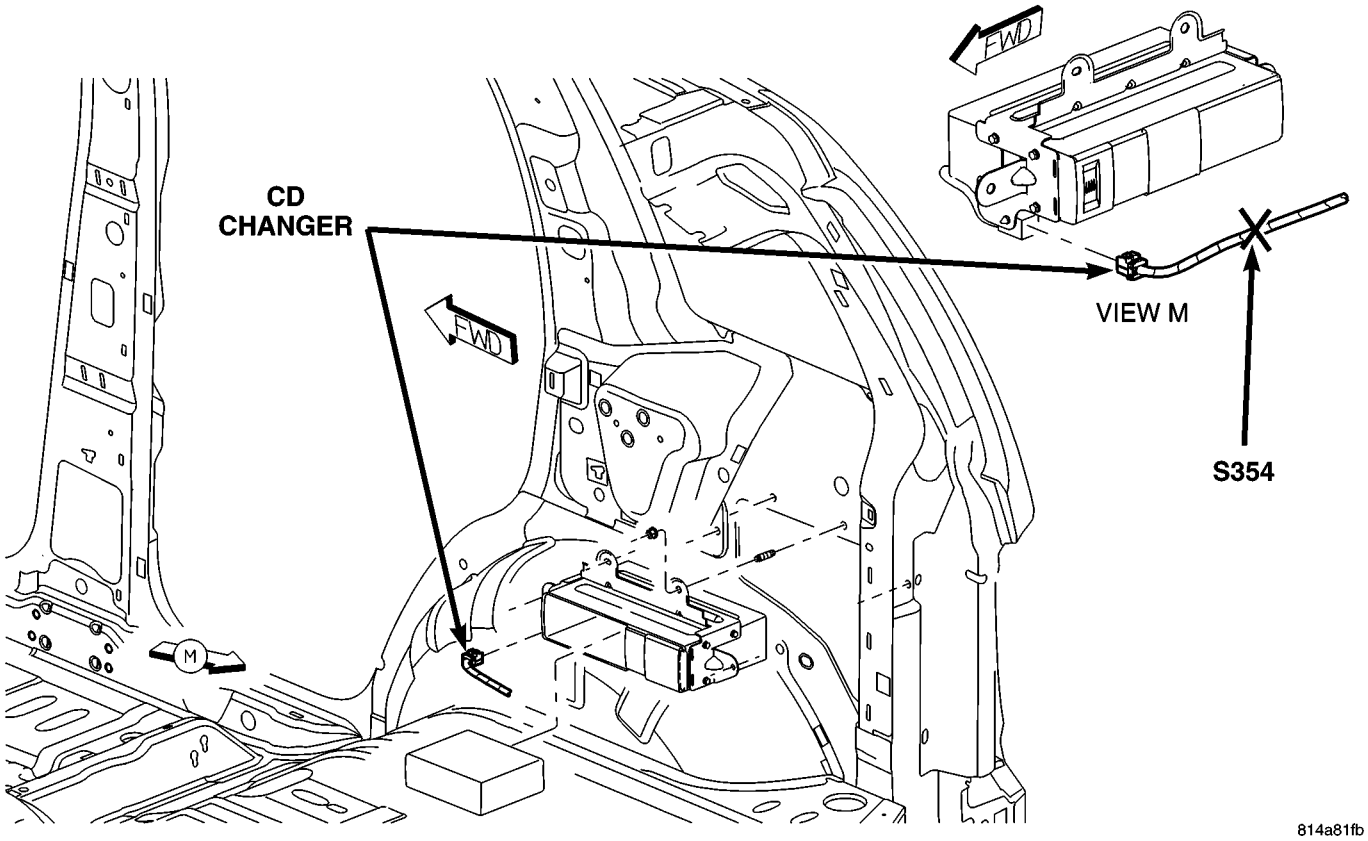

Fig. 50 RIGHT REAR BODY

CONNECTOR/GROUND/SPLICE LOCATION (Continued)

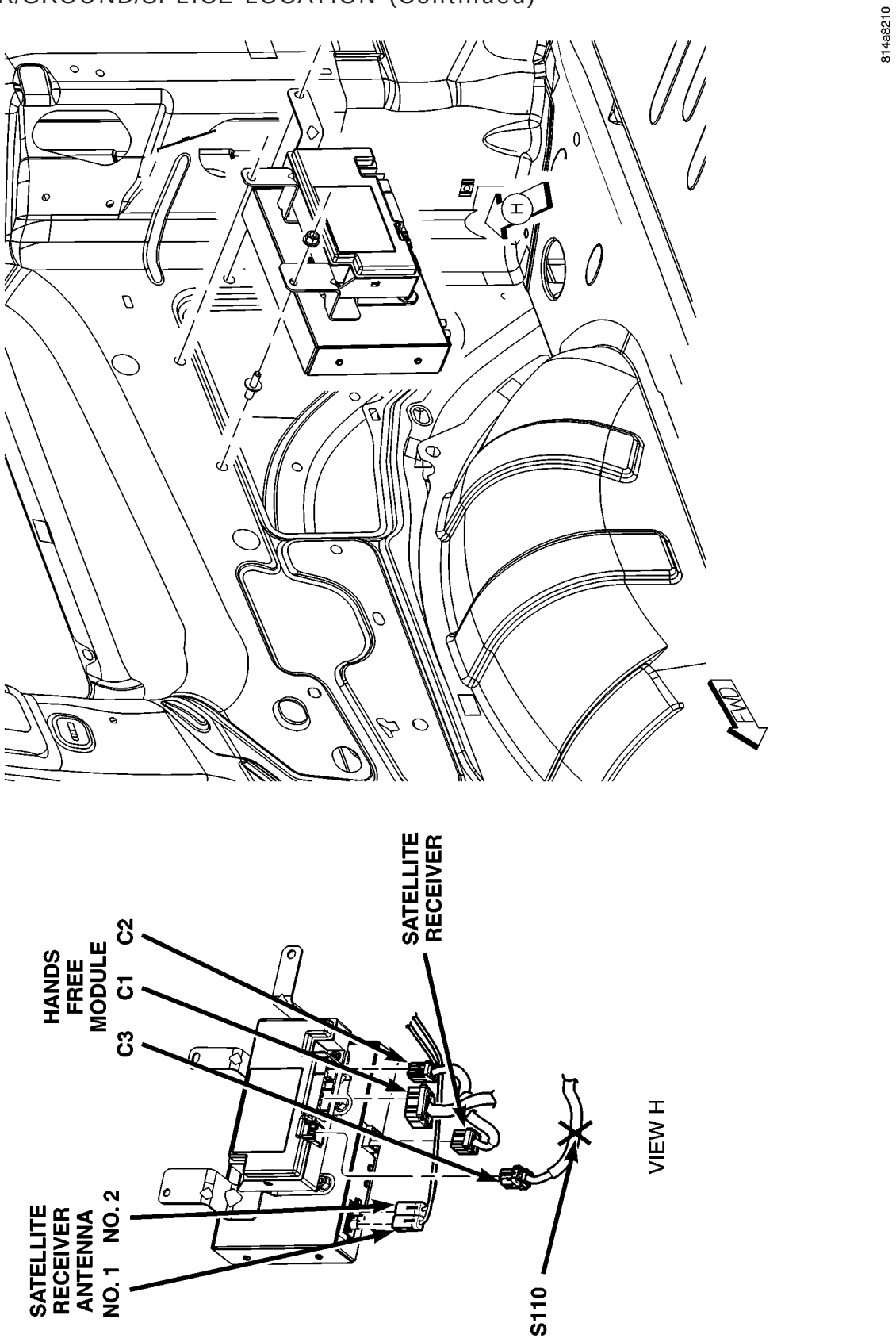

Fig. 51 RIGHT REAR BODY LOWER CORNER

CONNECTOR/GROUND/SPLICE LOCATION (Continued)

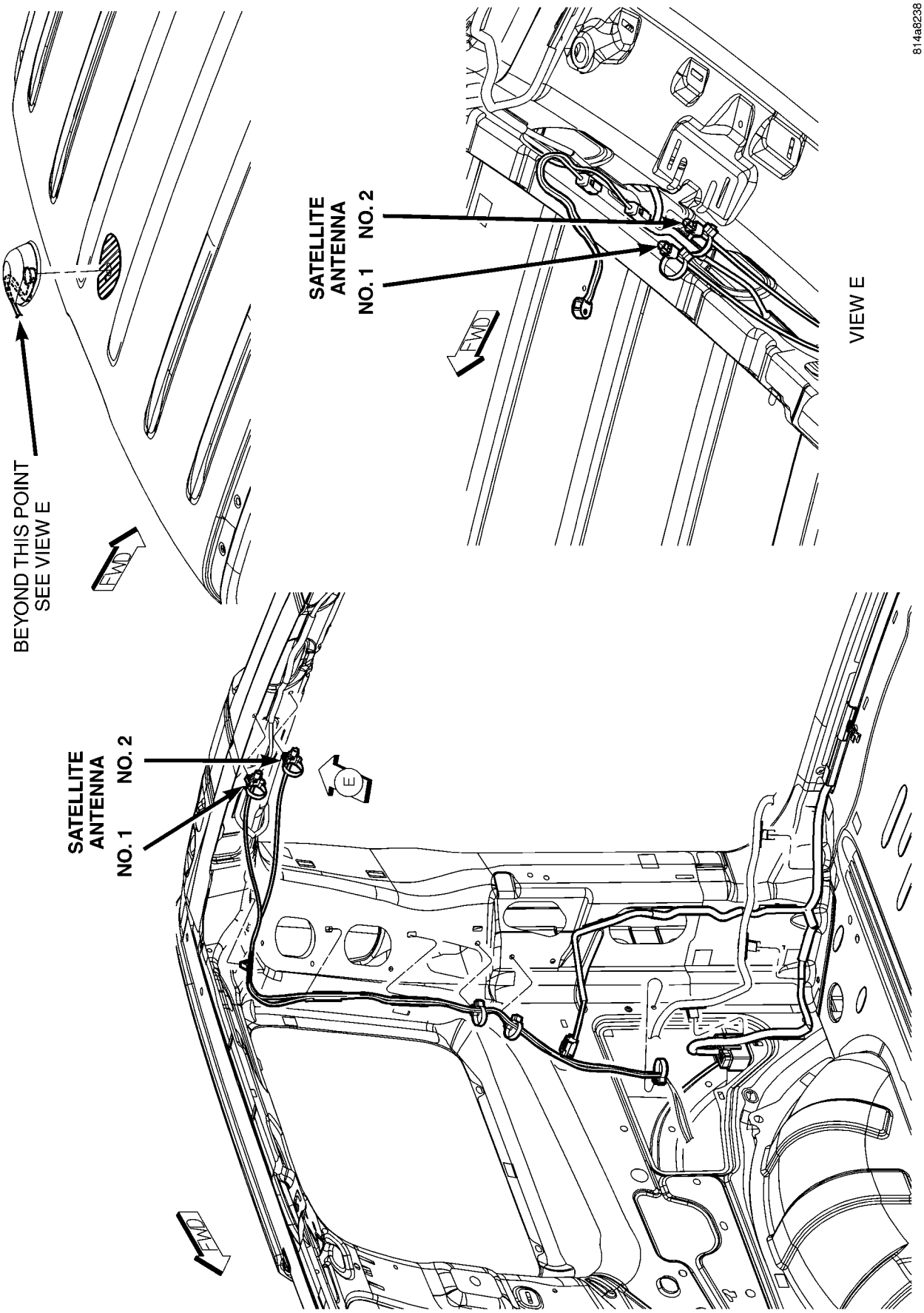

Fig. 52 RIGHT REAR BODY UPPER CORNER

CONNECTOR/GROUND/SPLICE LOCATION (Continued)

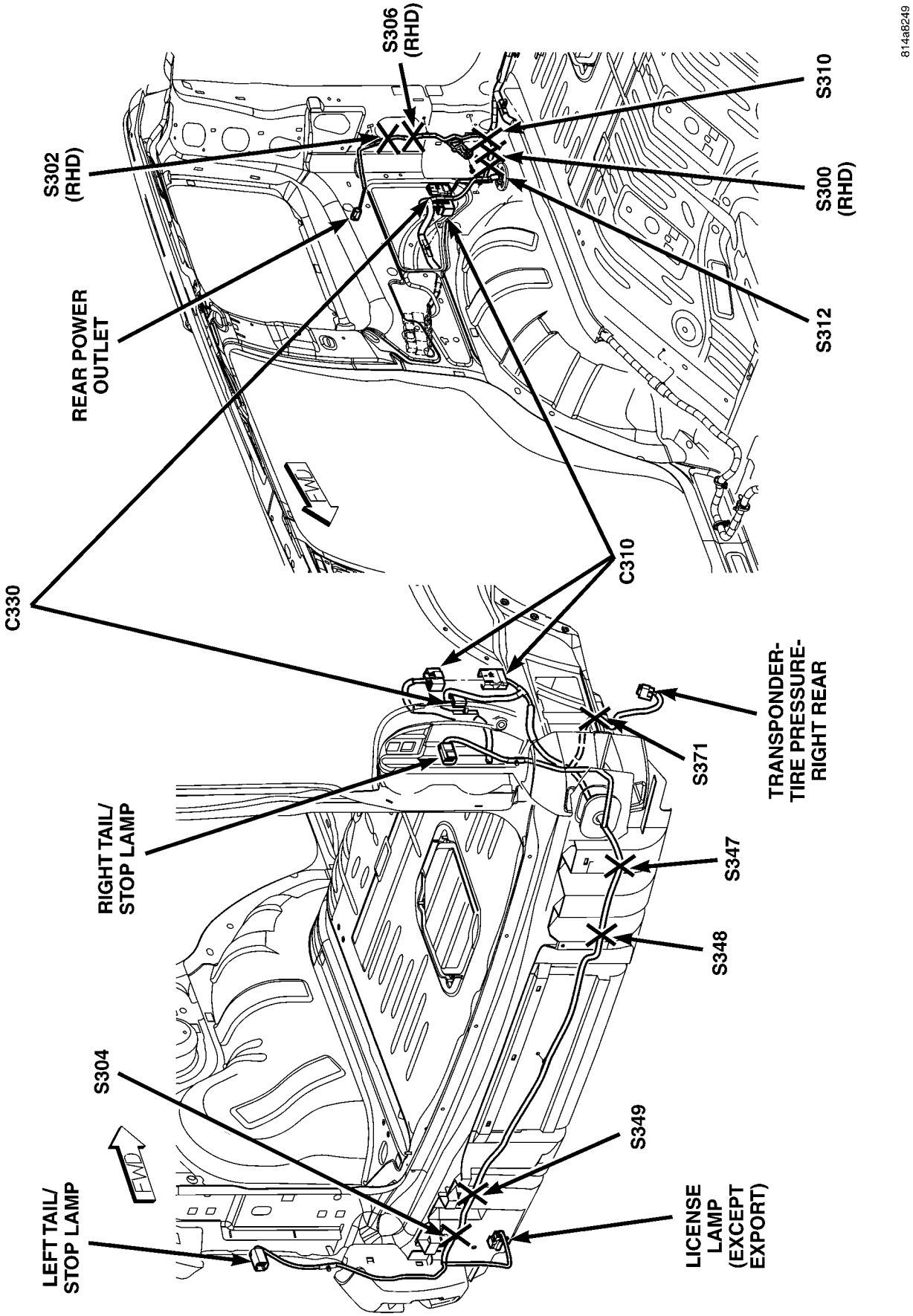

Fig. 53 REAR BODY

CONNECTOR/GROUND/SPLICE LOCATION (Continued)

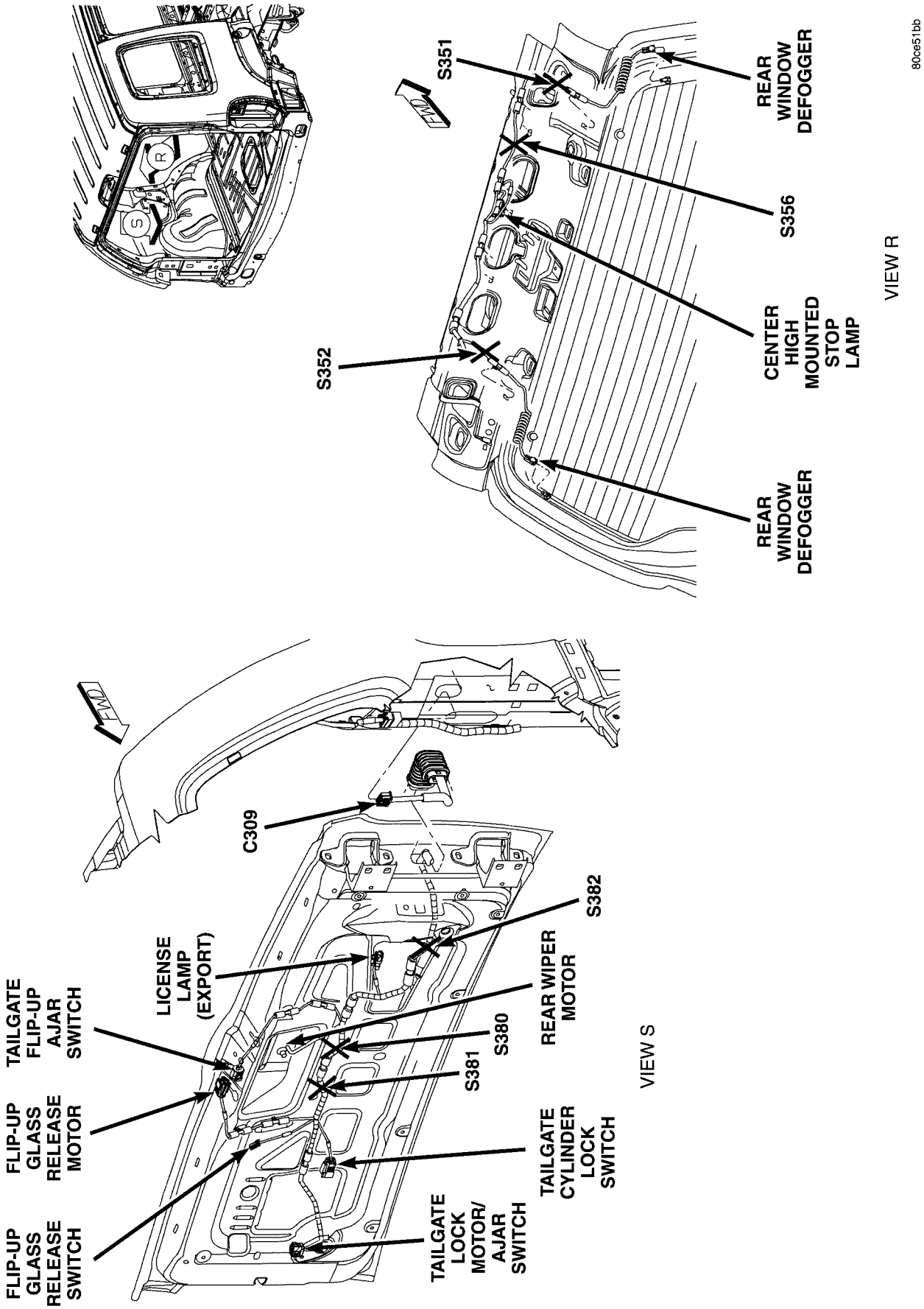

Fig. 54 TAILGATE

CONNECTOR/GROUND/SPLICE LOCATION (Continued)

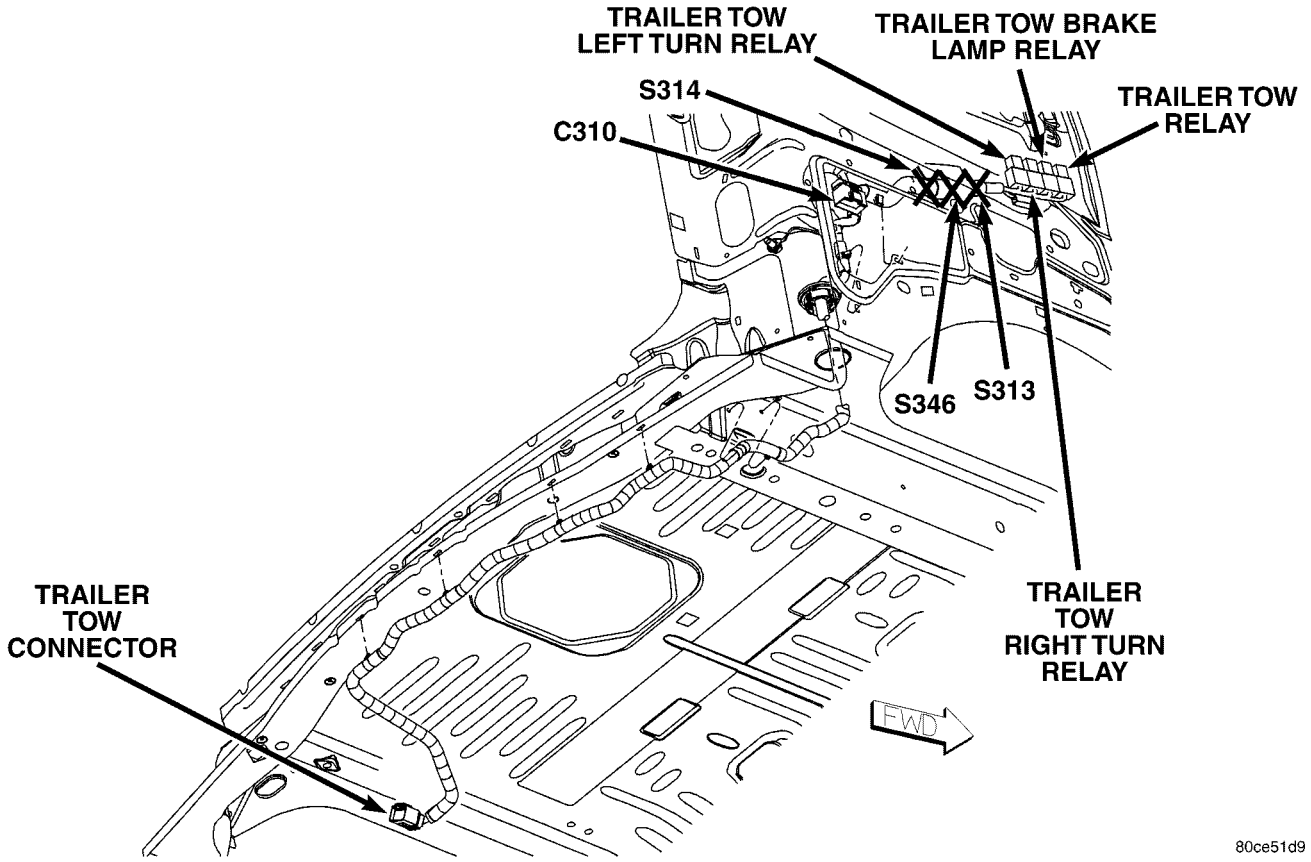

Fig. 55 TRAILER TOW CONNECTORS

CONNECTOR/GROUND/SPLICE LOCATION (Continued)

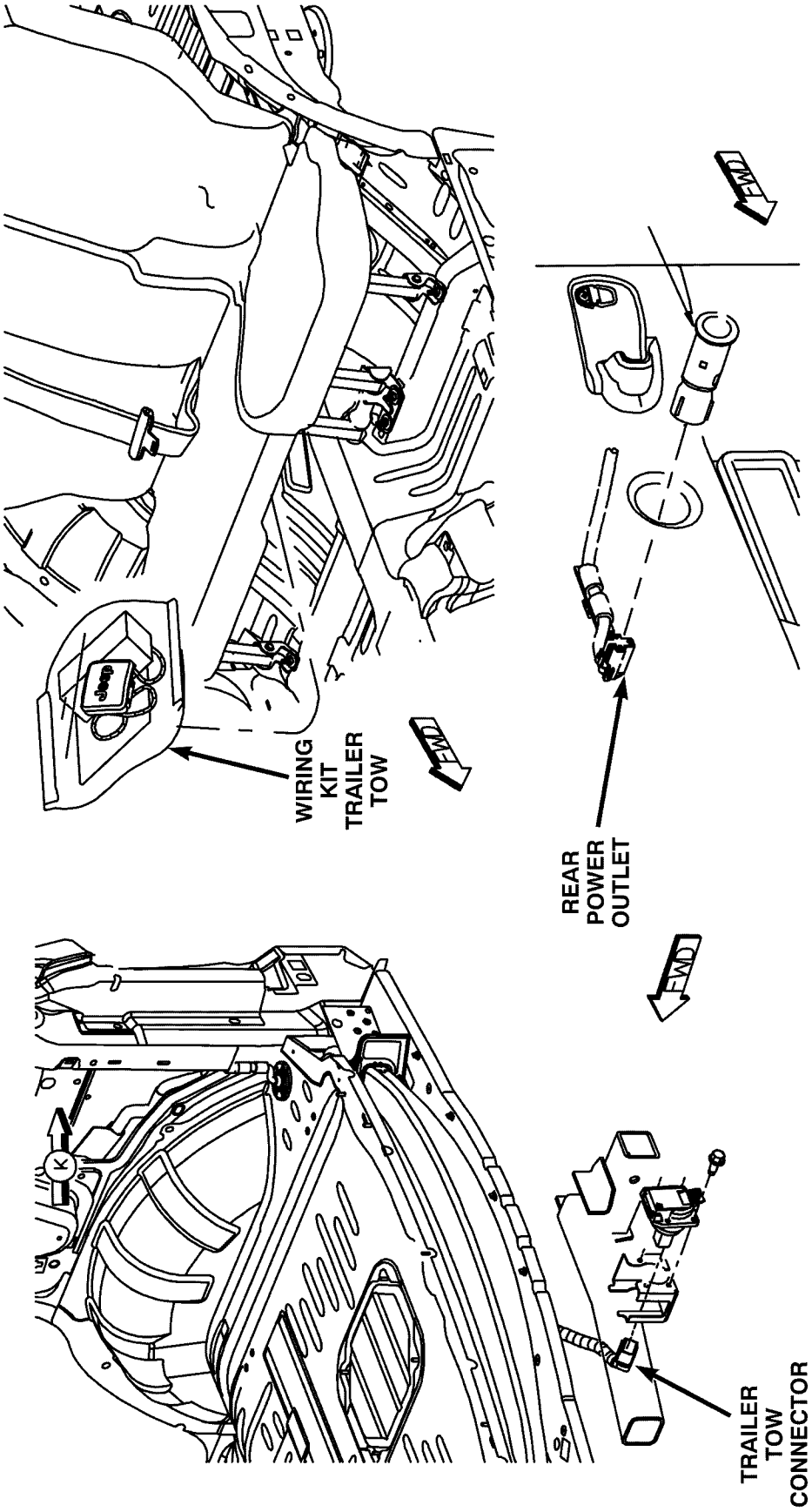

Fig. 56 REAR BODY

CONNECTOR/GROUND/SPLICE LOCATION (Continued)

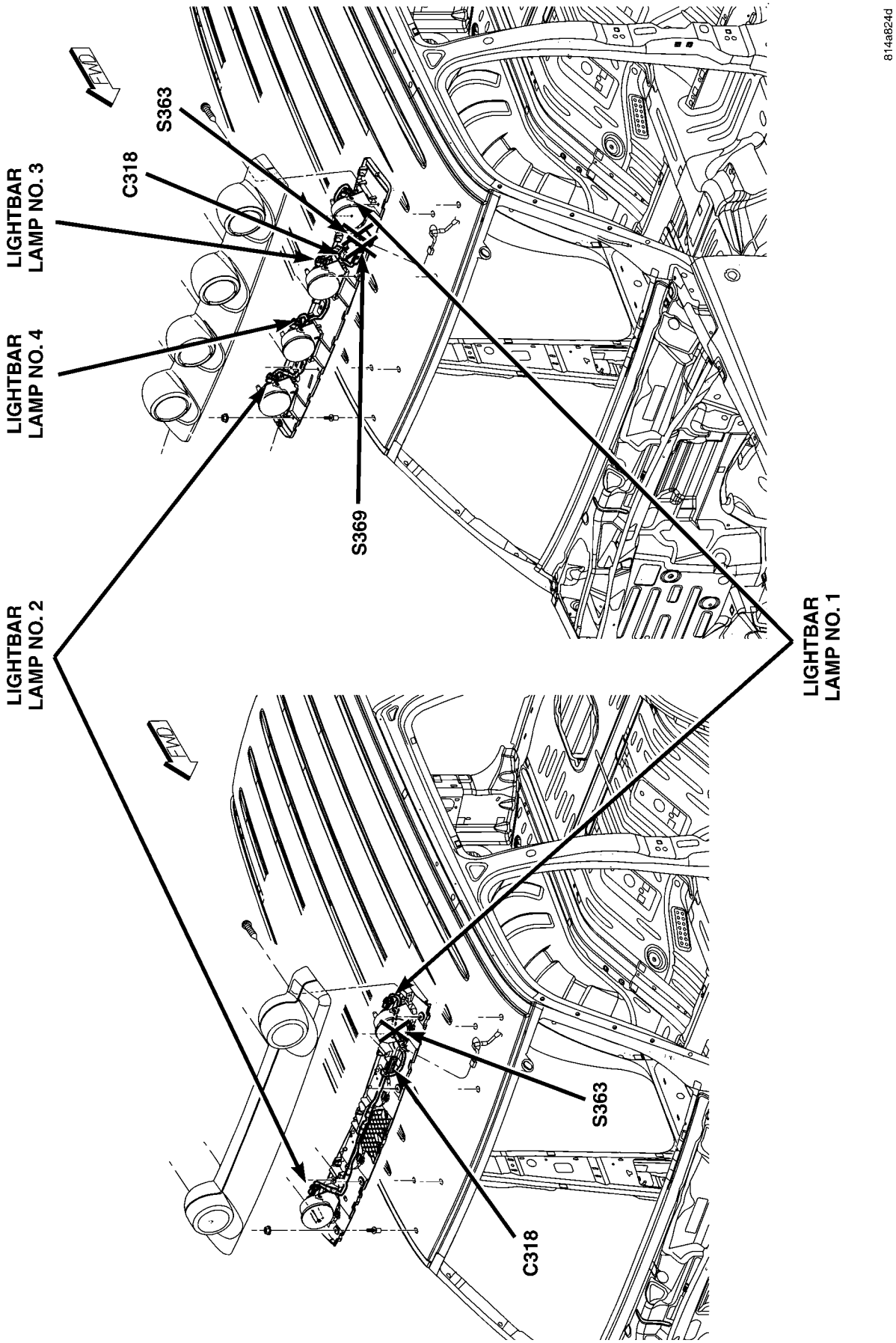

Fig. 57 ROOF LIGHT BAR

8W-97 POWER DISTRIBUTION

TABLE OF CONTENTS

page

POWER DISTRIBUTION
DESCRIPTION 1
OPERATION 1
SPECIAL TOOLS
POWER DISTRIBUTION SYSTEMS 2
CIGAR LIGHTER OUTLET
DESCRIPTION 2
OPERATION 2
DIAGNOSIS AND TESTING - CIGAR LIGHTER OUTLET 2
IOD FUSE
DESCRIPTION 3
OPERATION 3
REMOVAL 3
INSTALLATION 3
JUNCTION BLOCK
DESCRIPTION 4
OPERATION 4
DIAGNOSIS AND TESTING - JUNCTION BLOCK 4
REMOVAL
REMOVAL - LHD 5
REMOVAL - RHD 5
INSTALLATION
INSTALLATION - LHD 6
INSTALLATION - RHD 6
POWER DISTRIBUTION CENTER
DESCRIPTION 6
OPERATION 6
REMOVAL 7
DISASSEMBLY
POWER DISTRIBUTION CENTER DISASSEMBLY 7
ASSEMBLY
POWER DISTRIBUTION CENTER ASSEMBLY 9
INSTALLATION 10
POWER OUTLET
DESCRIPTION 11
OPERATION 11
DIAGNOSIS AND TESTING - POWER OUTLET . 11
REMOVAL 12
INSTALLATION 12
RELAY
DESCRIPTION 13
OPERATION 13
DIAGNOSIS AND TESTING - RELAY 13
REMOVAL 14
INSTALLATION 14
MICRO-RELAY
DESCRIPTION 14
OPERATION 14
DIAGNOSIS AND TESTING - MICRO-RELAY . . 14
REMOVAL 14
INSTALLATION 14

POWER DISTRIBUTION

DESCRIPTION

This group covers the various standard and optional power distribution components used on this model. The power distribution system for this vehicle consists of the following components:

- Power Distribution Center (PDC)
- Junction Block (JB)
- Cigar Lighter Outlet
- Power Outlets

The power distribution system also incorporates various types of circuit control and protection features, including:

- Automatic resetting circuit breakers
- Blade-type fuses
- Bus bars
- Cartridge fuses
- Circuit splice blocks
- Fusible link
- ISO Standard and Micro-Relays

Following are general descriptions of the major components in the power distribution system. See the owner's manual in the vehicle glove box for more information on the features and use of all of the power distribution system components. Refer to Wiring Diagrams for complete circuit diagrams.

OPERATION

The power distribution system for this vehicle is designed to provide safe, reliable, and centralized distribution points for the electrical current required to operate all of the standard and optional factory-installed electrical and electronic powertrain, chassis, safety, security, comfort and convenience systems. At the same time, the power distribution system was designed to provide ready access to these electrical distribution points for the vehicle technician to use when conducting diagnosis and repair of faulty cir-

cuits. The power distribution system can also prove useful for the sourcing of additional electrical circuits that may be required to provide the electrical current needed to operate accessories that the vehicle owner may choose to have installed in the aftermarket.

SPECIAL TOOLS

POWER DISTRIBUTION SYSTEMS

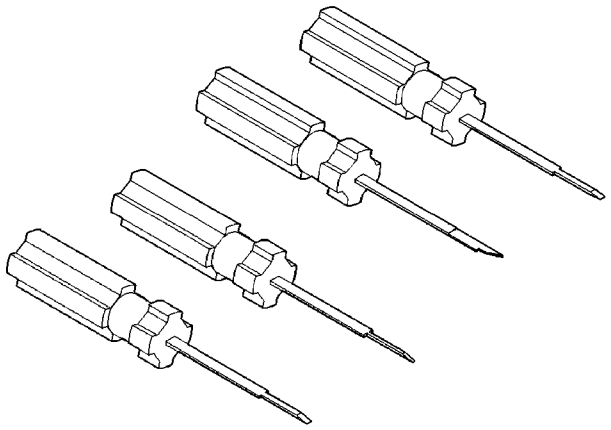

Terminal Pick Kit 6680

CIGAR LIGHTER OUTLET

DESCRIPTION

Some models are equipped with a cigar lighter outlet installed in the instrument panel. The cigar lighter outlet is located near the bottom of the instrument panel center stack area, below the heater and air conditioner controls. The cigar lighter outlet is secured by a snap fit within the center lower bezel.

The cigar lighter outlet, plastic cap and the knob and heating element unit are available for service replacement. These components cannot be repaired and, if faulty or damaged, they must be replaced.

OPERATION

The cigar lighter consists of two major components: a knob and heating element unit, and the cigar lighter base or outlet shell. The receptacle shell is connected to ground, and an insulated contact in the bottom of the shell is connected to battery current. The cigar lighter receives battery voltage from a fuse in the junction block when the ignition switch is in the Accessory or Run positions.

The cigar lighter knob and heating element are encased within a spring-loaded housing, which also features a sliding protective heat shield. When the knob and heating element are inserted in the outlet shell, the heating element resistor coil is grounded through its housing to the outlet shell. If the cigar lighter knob is pushed inward, the heat shield slides up toward the knob exposing the heating element, and the heating element extends from the housing toward the insulated contact in the bottom of the outlet shell.

Two small spring-clip retainers are located on either side of the insulated contact inside the bottom of the outlet shell. These clips engage and hold the heating element against the insulated contact long enough for the resistor coil to heat up. When the heating element is engaged with the contact, battery current can flow through the resistor coil to ground, causing the resistor coil to heat.

When the resistor coil becomes sufficiently heated, excess heat radiates from the heating element causing the spring-clips to expand. Once the spring-clips expand far enough to release the heating element, the spring-loaded housing forces the knob and heating element to pop back outward to their relaxed position. When the cigar lighter knob and element are pulled out of the outlet shell, the protective heat shield slides downward on the housing so that the heating element is recessed and shielded around its circumference for safety.

DIAGNOSIS AND TESTING - CIGAR LIGHTER OUTLET

For complete circuit diagrams, refer to **Horn/Cigar Lighter/Power Outlet** in Wiring Diagrams.

(1) Check the fused B(+) fuse in the junction block. If OK, go to Step 2. If not OK, repair the shorted circuit or component as required and replace the faulty fuse.

(2) Turn the ignition switch to the Run position. Check for battery voltage at the fused B(+) fuse in the junction block. If OK, go to Step 3. If not OK, repair the open or short as required.

(3) Remove the cigar lighter knob and element from the cigar lighter outlet shell. Check for continuity between the inside circumference of the cigar lighter outlet shell and a good ground. there should be continuity. If OK, go to Step 4. If not OK, go to Step 5.

(4) Turn the ignition switch to the Run position. Check for battery voltage at the insulated contact located at the back of the cigar lighter outlet shell. If OK, replace the faulty cigar lighter knob and element. If not OK, go to Step 5.

(5) Turn the ignition switch to the Off position. Disconnect and isolate the battery negative cable. Remove the instrument panel center lower bezel. Check for continuity between the ground circuit cavity of the cigar lighter wire harness connector and a good ground. There should be continuity. If OK, go to Step 6. If not OK, repair the open ground circuit to ground as required.

CIGAR LIGHTER OUTLET (Continued)

(6) Connect the battery negative cable. Turn the ignition switch to the Accessory or Run positions. Check for battery voltage at the fused B(+) circuit cavity of the cigar lighter wire harness connector. If OK, replace the faulty cigar lighter outlet. If not OK, repair the open fused B(+) circuit to the junction block fuse as required.

IOD FUSE

DESCRIPTION

All vehicles are equipped with an Ignition-Off Draw (IOD) fuse that is disconnected within the Junction Block when the vehicle is shipped from the factory. Dealer personnel are to reconnect the IOD fuse in the junction block as part of the preparation procedures performed just prior to new vehicle delivery.

On left hand drive vehicles, the left end of the instrument panel cover has a snap-fit fuse access panel that can be removed to provide service access to the fuses in the junction block. On right hand drive vehicles the junction block is mounted on the right hand side of the instrument panel. A finger recess is molded into the access panel for easy removal. An adhesive-backed fuse layout map is secured to the instrument panel side of the access panel to ensure proper fuse identification. The IOD fuse is a 15 ampere mini blade-type fuse, located in fuse cavity # 34. The fuse is secured within a White molded plastic fuse holder and puller unit that serves both as a tool for disconnecting and reconnecting the fuse in its junction block cavity, and as a fuse holder that conveniently stores the fuse in the same junction block cavity after it has been disconnected.

CIRCUITS INCLUDED WITH IOD FUSE

- Cluster
- Body Control Module
- Diagnostic Connector
- Map Lamps
- Glove Box Lamp
- Courtesy Lamps
- Compass Mini-Trip Computer
- Radio

OPERATION

The term ignition-off draw identifies a normal condition where power is being drained from the battery with the ignition switch in the Off position. The IOD fuse feeds the memory and sleep mode functions for some of the electronic modules in the vehicle as well as various other accessories that require battery current when the ignition switch is in the Off position. The only reason the IOD fuse is disconnected is to reduce the normal IOD of the vehicle electrical system during new vehicle transportation and pre-delivery storage to reduce battery depletion, while still allowing vehicle operation so that the vehicle can be loaded, unloaded and moved as needed by both vehicle transportation company and dealer personnel.

The IOD fuse is disconnected from JB fuse cavity # 34 when the vehicle is shipped from the assembly plant. Dealer personnel must reconnect the IOD fuse when the vehicle is being prepared for delivery in order to restore full electrical system operation. Once the vehicle is prepared for delivery, the IOD function of this fuse becomes transparent and the fuse that has been assigned the IOD designation becomes only another Fused B(+) circuit fuse.

The IOD fuse can be used by the vehicle owner as a convenient means of reducing battery depletion when a vehicle is to be stored for periods not to exceed about thirty days. However, it must be remembered that disconnecting the IOD fuse will not eliminate IOD, but only reduce this normal condition. If a vehicle will be stored for more than about thirty days, the battery negative cable should be disconnected to eliminate normal IOD; and, the battery should be tested and recharged at regular intervals during the vehicle storage period to prevent the battery from becoming discharged or damaged.

REMOVAL

The Ignition-Off Draw (IOD) fuse is disconnected from Junction Block fuse cavity # 34 when the vehicle is shipped from the assembly plant. Dealer personnel must reconnect the IOD fuse when the vehicle is being prepared for delivery in order to restore full electrical system operation.

(1) Turn the ignition switch to the Off position.

(2) Remove the fuse access panel by unsnapping it from the outboard end of the instrument panel.

(3) Grasp the outer tabs of the IOD fuse holder unit in fuse cavity # 34 of the Junction Block between the thumb and forefinger and pull the unit firmly outward.

(4) Install the fuse access panel by snapping it onto the outboard end of the instrument panel.

INSTALLATION

(1) Turn the ignition switch to the Off position.

(2) To install the IOD fuse, use a thumb to press the IOD fuse holder unit in fuse cavity # 34 firmly into the junction block.

(3) Install the fuse access panel by snapping it onto the left outboard end of the instrument panel.

JUNCTION BLOCK

DESCRIPTION

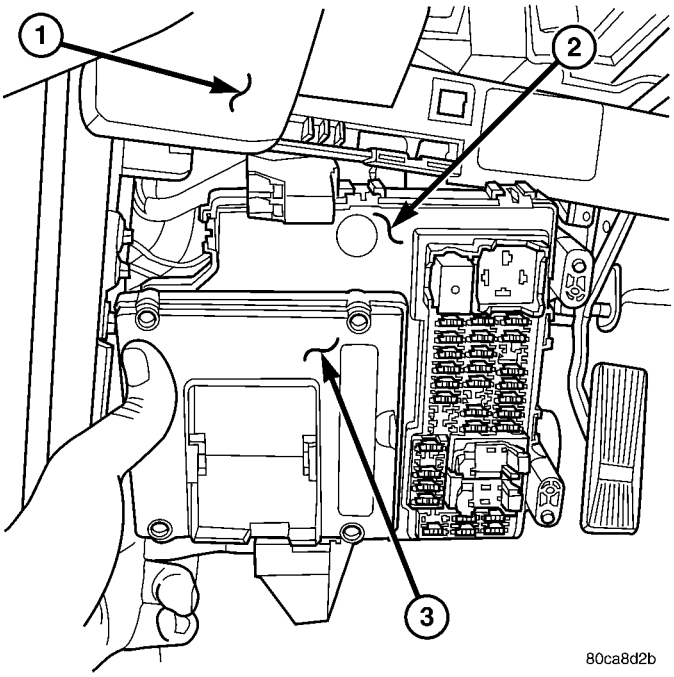

Fig. 1 KJ Junction Block

1 - INSTRUMENT PANEL
2 - JUNCTION BLOCK
3 - BODY CONTROL MODULE

An electrical Junction Block (JB) is concealed behind the left outboard end of the instrument panel on left hand drive vehicles. On right hand drive vehicles the Junction Block is concealed behind the right outboard end of the instrument panel. The junction block simplifies and centralizes numerous electrical components and distributes electrical current to many of the accessory systems throughout the vehicle. It also eliminates the need for numerous splice connections and serves in place of a bulkhead connector between many of the engine compartment, instrument panel, and body wire harnesses. The junction block houses up to thirty-nine mini blade-type fuses, up to three blade-type automatic resetting circuit breakers, up to three International Standards Organization (ISO) relays and up to eleven International Standards Organization (ISO) micro-relays.

The junction block also provides the mounting location for the Body Control Module (BCM) (Fig. 1) and Remote Keyless Entry (RKE) Module. Refer to the Electronic Control Modules section of this manual for more information on these two modules. The body control module is secured to the junction block assembly with four screws and multiple electrical connectors. The remote keyless entry module is mounted on the body control module via a single built-in electrical connector. With the junction block in its normal mounting location the body control module and remote keyless entry module are not accessible.

The molded plastic junction block housing has two integral mounting bosses that are secured with two screws to the left instrument panel end bracket on left hand drive. Additionally, upper and lower mounting brackets are attached to the junction block. These brackets are also secured to the instrument panel with two screws. On right hand drive vehicles, the junction block is secured to the right instrument panel end bracket on right hand drive. The left or right instrument panel end caps have snap-fit fuse access panels that can be removed for service of the junction block mounted fuses, daytime running lamp or high beam headlamp relays. A fuse puller and spare fuse holders are located on the back of the fuse access cover, as well as an adhesive-backed fuse layout map to ensure proper fuse identification. Refer to the owners manual or Wiring section of this manual for detailed component location and/or identification.

The junction block unit cannot be repaired and is only serviced as an assembly. If any internal circuit or the junction block housing is faulty or damaged, the entire junction block unit must be replaced.

OPERATION

All of the circuits entering and exiting the junction block do so through wire harness connectors or the body control module which is mounted directly to the junction block underneath the instrument panel. These components are connected to the junction block through integral connector receptacles molded into the junction block housing. Internal connection of all of the junction block circuits is accomplished by an intricate combination of hard wiring and bus bars. Refer to **Wiring Diagrams** for the location of complete junction block circuit diagrams.

DIAGNOSIS AND TESTING - JUNCTION BLOCK

The junction block does not incorporate any self diagnostic capability. Most of the electrical circuits incorporated into the vehicle must pass through the junction block at one point or another. The most efficient means of diagnosing a suspected junction block problem involves a simple continuity tester or ohm meter. Using the Wiring Diagrams as a guide trace the problem circuit to the proper junction block cavity and test all circuits in the effected circuit for proper continuity. A open or high resistance circuit is a sign of a problem. Some other possible junction block problems to look for are:

- Loose fuse receptacle terminals.
- Loose relay / circuit breaker receptacle terminals.

JUNCTION BLOCK (Continued)

- Bent or distorted electrical circuit pins.
- Incorrect size fuse installed in junction block fuse cavity.
- Dark areas identifying a source of excess heat.
- Defective fuse, relay or circuit breaker installed in junction block cavity.

REMOVAL

REMOVAL - LHD

The following junction block removal procedure is for Left Hand Drive (LHD) vehicles only.

(1) Disconnect and isolate the negative battery cable.

(2) Remove the left end cap from the instrument panel.

(3) Unsnap and remove the left outboard trim bezel from the instrument panel. Located just to the left of the steering column.

(4) Remove the steering column opening cover (Refer to 23 - BODY/INSTRUMENT PANEL/STEERING COLUMN OPENING COVER - REMOVAL).

(5) Remove the left cowl trim panel from the vehicle (Refer to 23 - BODY/INTERIOR/COWL TRIM COVER - REMOVAL).

(6) Remove the courtesy lamp from under the left side of the instrument panel. This will allow sufficient room to remove the junction block from under the instrument panel.

(7) Working through the steering column opening cover, remove the three bulkhead and two body controller electrical connectors from the junction block assembly.

(8) Detach instrument panel wire harness from the lower channel on the instrument panel. This will allow sufficient room to remove the junction block from under the instrument panel.

(9) Remove the four junction block retaining screws and remove the junction block from under the instrument panel. See (Fig. 2) for access to the top outboard retaining screw.

NOTE: On models equipped with a manual transmission, depress the clutch pedal to remove the Junction Block from under the instrument panel.

REMOVAL - RHD

The following junction block removal procedure applies to Right Hand Drive (RHD) vehicles only.

(1) Disconnect and isolate the negative battery cable.

(2) Remove the right end cap from the instrument panel.

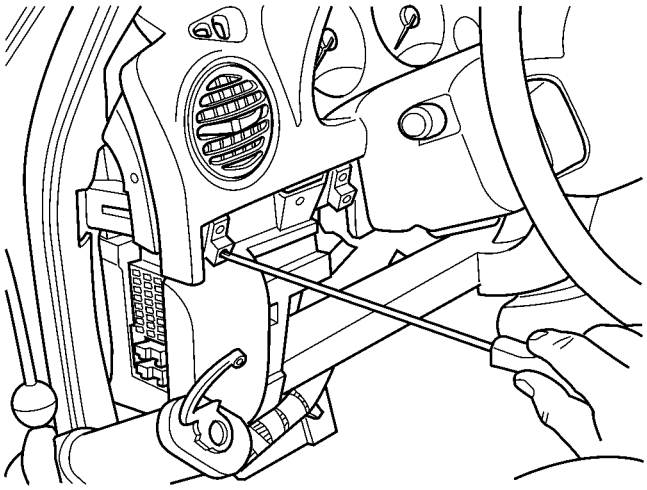

Fig. 2 Accessing Junction Block Retaining Screw - LHD Only

(3) Unsnap and remove the right outboard trim bezel from the instrument panel. Located just to the right of the steering column.

(4) Remove the steering column opening cover (Refer to 23 - BODY/INSTRUMENT PANEL/STEERING COLUMN OPENING COVER - REMOVAL).

(5) Remove the right cowl trim panel from the vehicle (Refer to 23 - BODY/INTERIOR/COWL TRIM COVER - REMOVAL).

(6) Remove the courtesy lamp from under the right side of the instrument panel. This will allow sufficient room to remove the junction block from under the instrument panel.

(7) Working through the steering column opening cover, remove the three bulkhead and two body controller electrical connectors from the junction block assembly.

(8) Remove the two ground wires from the right lower kick panel area. Located directly behind the kick trim panel. This will allow sufficient room to remove the junction block from under the instrument panel.

(9) Remove the upper and forward most (in relation to the vehicle) group of relays from the junction block. This will allow sufficient room to remove the junction block from under the instrument panel.

(10) Remove the four junction block retaining screws and remove the junction block from under the instrument panel. It will be necessary to position the under instrument panel wire harness out of the way to remove the junction block.

JUNCTION BLOCK (Continued)

INSTALLATION

INSTALLATION - LHD

NOTE: On vehicles equipped with a manual transmission, it will be helpful to depress the clutch pedal when installing the Junction Block under the instrument panel.

(1) Position the junction block and install the four junction block retaining screws.

(2) Install instrument panel wire harness on the lower channel of the instrument panel.

(3) Working through the steering column opening cover, install the three bulkhead and two body controller electrical connectors on the junction block assembly.

(4) Install the courtesy lamp under the left side of the instrument panel.

(5) Install the left cowl trim panel on the vehicle (Refer to 23 - BODY/INTERIOR/COWL TRIM COVER - REMOVAL).

(6) Install the steering column opening cover (Refer to 23 - BODY/INSTRUMENT PANEL/STEERING COLUMN OPENING COVER - REMOVAL).

(7) Install the left outboard trim bezel on the instrument panel.

(8) Install the left end cap on the instrument panel.

(9) Connect the negative battery cable.

INSTALLATION - RHD

(1) Position the junction block and install the four junction block retaining screws.

(2) Install the upper and forward most group of relays in the junction block.

(3) Install the two ground wires on the right lower kick panel area.

(4) Working through the steering column opening cover, install the three bulkhead and two body controller electrical connectors on the junction block assembly.

(5) Install the courtesy lamp under the right side of the instrument panel.

(6) Install the right cowl trim panel on the vehicle (Refer to 23 - BODY/INTERIOR/COWL TRIM COVER - INSTALLATION).

(7) Install the steering column opening cover (Refer to 23 - BODY/INSTRUMENT PANEL/STEERING COLUMN OPENING COVER - INSTALLATION).

(8) Install the right outboard trim bezel on the instrument panel.

(9) Install the right end cap on the instrument panel.

(10) Connect the negative battery cable.

POWER DISTRIBUTION CENTER

DESCRIPTION

All of the electrical current distributed throughout this vehicle is directed through the standard equipment Power Distribution Center (PDC). The molded plastic PDC housing is located in the left front corner of the engine compartment, between the battery and the grille. The PDC houses up to fifteen maxi-type cartridge fuses, which replace all in-line fusible links, except for the fusible link between the PDC and alternator. The PDC also houses up to thirteen blade-type mini fuses, and up to twelve International Standards Organization (ISO) relays (four standard-type and eight micro-type).

The PDC housing is secured in the engine compartment at three points. Integral mounts on both sides of the PDC housing engage and latch to stanchions that are integral to the molded plastic battery tray. The PDC is integral to the headlamp and dash wire harness, which exits from the bottom of the PDC housing. The PDC housing has a molded plastic cover that includes an integral latch at the front and pivot hooks at the back that snap over a hinge pin on the rear of the PDC housing. The PDC cover is easily opened or removed for service access and has a convenient fuse and relay layout map integral to the inside surface of the cover to ensure proper component identification. A fuse puller is also stored on the inside of the PDC cover.

The PDC cover, the PDC housing lower cover, the PDC relay wedges, the PDC mini fuse wedge, the PDC relay cassettes and the PDC B(+) terminal stud module are available for service replacement. The PDC main housing unit, the cartridge fuse wedges and the bus bars cannot be repaired and are only serviced as a unit with the headlamp and dash wire harness. If the PDC main housing unit, cartridge fuse wedge or the bus bars are faulty or damaged, the headlamp and dash wire harness unit must be replaced.

OPERATION

All of the current from the battery and the alternator output enters the PDC through two cables and a single two-holed eyelet that is secured with nuts to the two PDC B(+) terminal studs just inside the inboard end of the PDC housing. The PDC cover is unlatched and opened to access the battery and alternator output connection B(+) terminal studs, the fuses or the relays. Internal connection of all of the PDC circuits is accomplished by an intricate combination of hard wiring and bus bars. Refer to **Power**

POWER DISTRIBUTION CENTER (Continued)

Distribution in Wiring Diagrams for the location of complete PDC circuit diagrams.

REMOVAL

The Power Distribution Center (PDC) main housing unit, the PDC cartridge fuse wedge and the PDC bus bars cannot be repaired and are only serviced as a unit with the headlamp and dash wire harness. If the PDC main housing unit, the cartridge fuse wedges or the bus bars are faulty or damaged, the entire PDC and headlamp and dash wire harness unit must be replaced.

(1) Disconnect and isolate the battery negative cable.

(2) Disconnect each of the headlamp and dash wire harness connectors. Refer to **Connector Locations** in Wiring Diagrams for the location of more information on the right headlamp and dash wire harness connector locations.

(3) Remove all of the fasteners that secure each of the headlamp and dash wire harness ground eyelets to the vehicle body and chassis components. Refer to **Connector Locations** in Wiring Diagrams for the location of more information on the ground eyelet locations.

(4) Disengage each of the retainers that secure the headlamp and dash wire harness to the vehicle body and chassis components. Refer to **Connector Locations** in Wiring Diagrams for the location of more information on the headlamp and dash wire harness retainer locations.

(5) Unlatch and open the PDC cover.

(6) Remove the two nuts that secure the two-holed eyelet of the battery wire harness PDC take outs to the PDC B(+) terminal studs.

(7) Remove the battery wire harness PDC take out eyelet from the B(+) terminal studs.

(8) Disengage the latches on the PDC housing mounts from the tabs on the PDC mounting stanchions of the battery tray, and pull the PDC housing upward to disengage the mounts from the stanchions.

(9) Remove the PDC and the headlamp and dash wire harness from the engine compartment as a unit.

DISASSEMBLY

POWER DISTRIBUTION CENTER DISASSEMBLY

PDC HOUSING LOWER COVER

REMOVAL

The Power Distribution Center (PDC) cover, the PDC housing lower cover, the PDC relay wedges, the PDC mini fuse wedge, the PDC relay cassettes and the PDC B(+) terminal stud module are available for service replacement. The PDC cover can be simply unlatched and removed from the PDC housing without the PDC being removed or disassembled. Service of the remaining PDC components requires that the PDC be removed from its mounting and disassembled. Refer to **Wiring Repair** in Wiring Diagrams for the location of the wiring repair procedures.

(1) Unlatch and remove the cover from the PDC.

(2) Remove the two nuts that secure the two-holed eyelet of the battery wire harness PDC take out to the B(+) terminal studs near the inboard end of the PDC.

(3) Remove the battery wire harness PDC take out eyelet from the two PDC B(+) terminal studs.

(4) Disengage the latches on the PDC housing mounts from the tabs on the PDC mounting stanchions on the battery tray, and pull the PDC housing upward to disengage the mounts from the stanchions.

(5) Where the headlamp and dash wire harness exits the PDC, remove the tape that secures the wire harness to the trough formation on the PDC housing lower cover.

(6) Using a trim stick or another suitable wide flat-bladed tool, gently pry the latches on each side of the PDC housing that secure the housing lower cover to the PDC and remove the housing lower cover (Fig. 3).

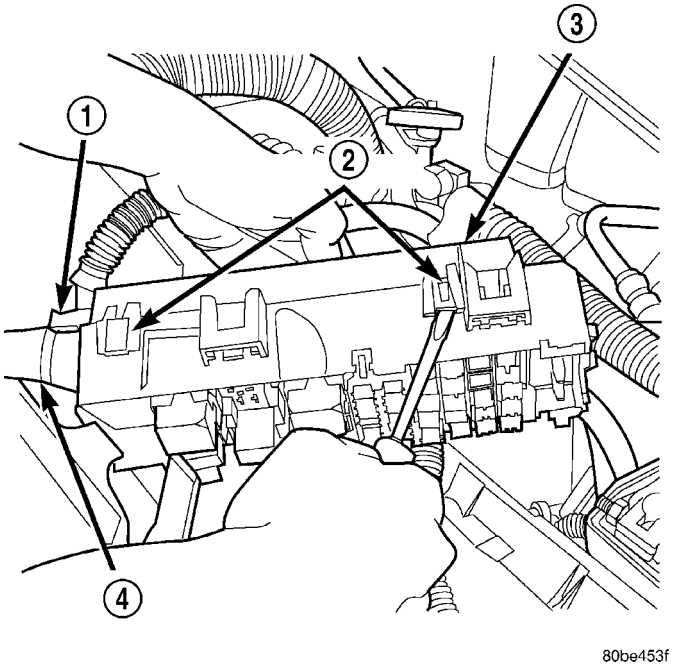

Fig. 3 PDC Housing Lower Cover Remove/Install - Typical

1 - TROUGH FORMATION
2 - LATCHES (5)
3 - PDC HOUSING LOWER COVER
4 - WIRE HARNESS

POWER DISTRIBUTION CENTER (Continued)

PDC B+ TERMINAL MODULE

REMOVAL

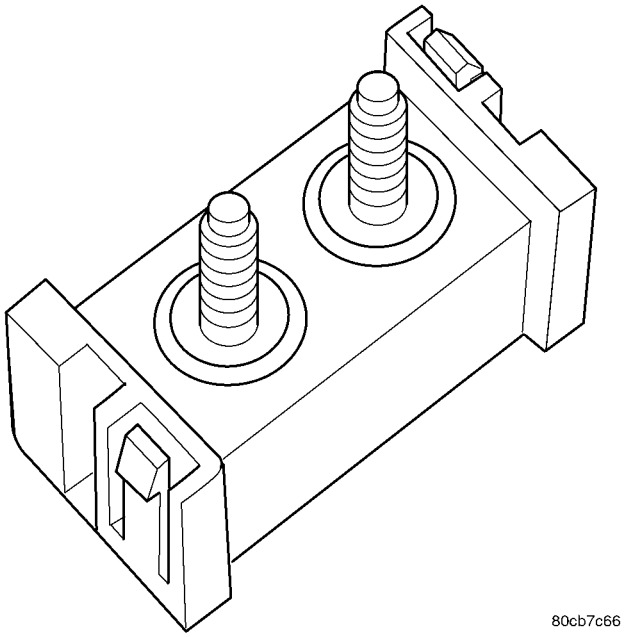

Fig. 4 B+ Terminal Module

The Power Distribution Center (PDC) cover, the PDC housing lower cover, the PDC relay wedges, the PDC mini fuse wedge, the PDC relay cassettes and the PDC B(+) terminal stud module (Fig. 4) are available for service replacement. The PDC cover can be simply unlatched and removed from the PDC housing without the PDC being removed or disassembled. Service of the remaining PDC components requires that the PDC be removed from its mounting and disassembled. Refer to **Wiring Repair** in Wiring Diagrams for the location of the wiring repair procedures.

(1) Remove the PDC housing lower cover.

(2) From the top of the PDC housing, use a small screwdriver or a terminal pick tool (Special Tool Kit 6680) to release the two latches that secure the B(+) terminal module in the PDC.

(3) Gently and evenly press the two B(+) terminal studs down through the bus bar in the PDC.

(4) From the bottom of the PDC housing, remove the B(+) terminal module from the PDC.

PDC RELAY WEDGE

REMOVAL

The Power Distribution Center (PDC) cover, the PDC housing lower cover, the PDC relay wedges, the PDC mini fuse wedge, the PDC relay cassettes and the PDC B(+) terminal stud module are available for service replacement. The PDC cover can be simply unlatched and removed from the PDC housing without the PDC being removed or disassembled. Service of the remaining PDC components requires that the PDC be removed from its mounting and disassembled. Refer to **Wiring Repair** in Wiring Diagrams for the location of the wiring repair procedures.

(1) Remove the PDC housing lower cover.

(2) Remove each of the relays from the PDC relay wedge to be removed.

(3) From the bottom of the PDC housing, use a small screwdriver or a terminal pick tool (Special Tool Kit 6680) to release the two latches (yellow) that secure the relay wedge to the PDC relay cassette.

(4) From the top of the PDC housing, remove the relay wedge from the PDC relay cassette (Fig. 5).

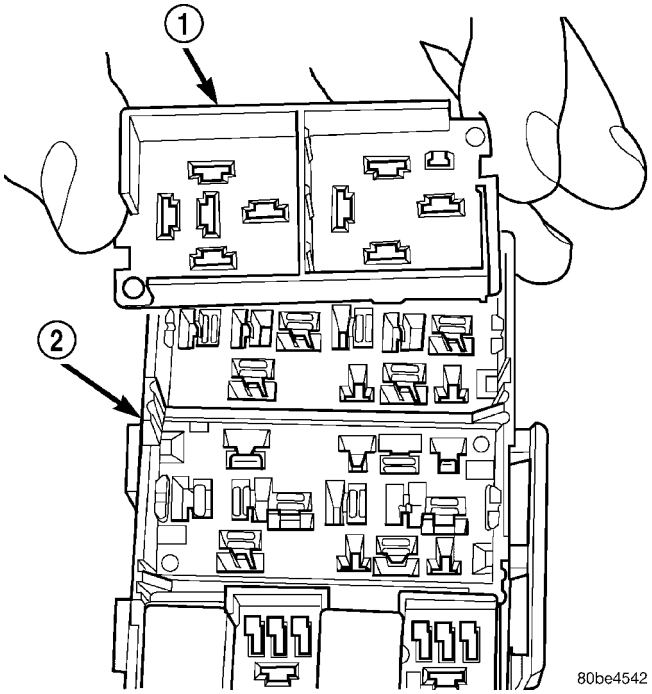

Fig. 5 PDC Relay Wedge Remove/Install - Typical

1 - RELAY WEDGE
2 - PDC HOUSING

PDC RELAY CASSETTE

REMOVAL

The Power Distribution Center (PDC) cover, the PDC housing lower cover, the PDC relay wedges, the PDC mini fuse wedge, the PDC relay cassettes and the PDC B(+) terminal stud module are available for service replacement. The PDC cover can be simply unlatched and removed from the PDC housing without the PDC being removed or disassembled. Service of the remaining PDC components requires that the PDC be removed from its mounting and disassembled. Refer to **Wiring Repair** in Wiring Diagrams for the location of the wiring repair procedures.

POWER DISTRIBUTION CENTER (Continued)

(1) Remove the relay wedge from the PDC relay cassette to be removed.

NOTE: It may be necessary to remove relay cassettes that are not being serviced from the PDC housing in order to obtain sufficient clearance to access the faulty relay cassette. The same service procedure is repeated as necessary to remove each of the interfering relay wedges and relay cassettes from the PDC housing.

(2) From the top of the PDC housing, use a small screwdriver or a terminal pick tool (Special Tool Kit 6680) to release the two latches that secure the relay cassette in the PDC (Fig. 6).

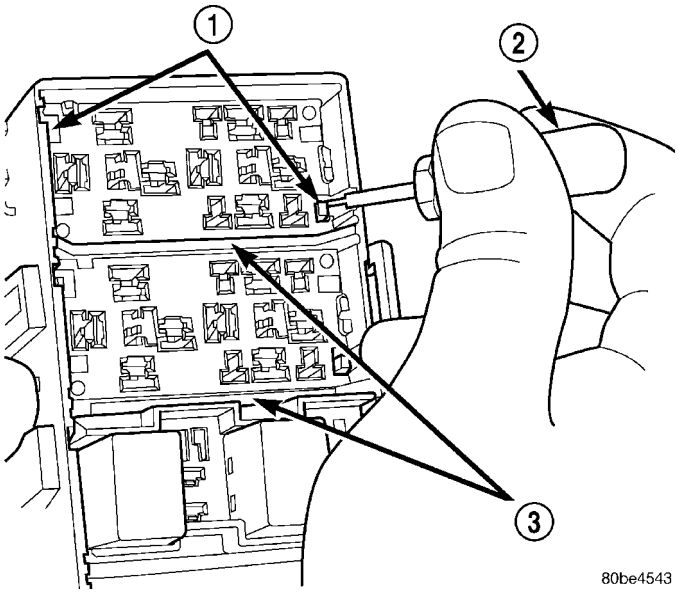

Fig. 6 PDC Relay Cassette Latches - Typical

1 - LATCHES
2 - FROM SPECIAL TOOL KIT 6680
3 - PDC RELAY CASSETTES

(3) Gently and evenly press the relay cassette down through the PDC housing.

(4) From the bottom of the PDC housing, remove the relay cassette from the PDC (Fig. 7).

CAUTION: Do not remove the wiring and terminals from the terminal cavities of the faulty PDC relay cassette at this time. Refer to the Assembly procedure that follows for the proper procedures for transferring the wiring and terminals to the replacement PDC relay cassette.

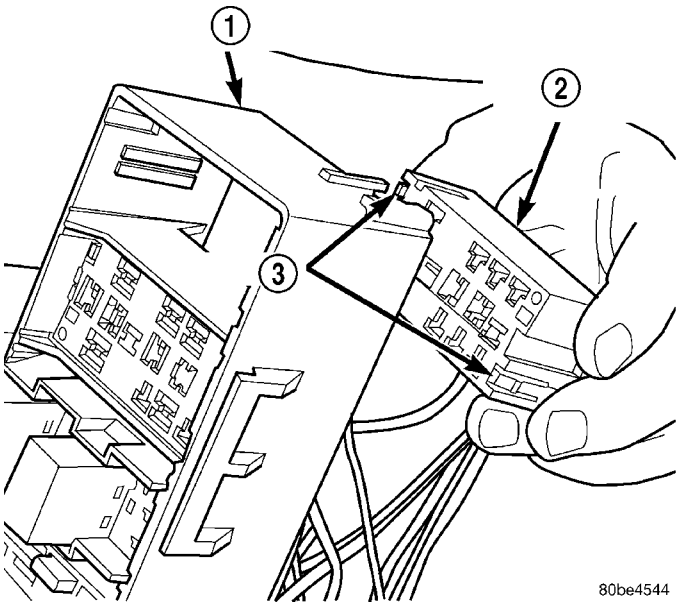

Fig. 7 PDC Relay - Typical

1 - PDC HOUSING
2 - PDC RELAY CASSETTE
3 - LATCHES

ASSEMBLY

POWER DISTRIBUTION CENTER ASSEMBLY

PDC B(+) TERMINAL MODULE

INSTALLATION

(1) From the bottom of the PDC housing, align and insert the B(+) terminal module into the PDC.

(2) From the bottom of the PDC housing, align and insert the two studs of the PDC B(+) terminal module through the bus bar in the PDC.

(3) From the bottom of the PDC housing, press the B(+) terminal module gently and evenly into the PDC until both of the latches are fully engaged.

(4) Install the PDC housing lower cover.

RELAY WEDGE

INSTALLATION

(1) From the top of the PDC housing, align and insert the PDC relay wedge latch arms into the correct cavities in the relay cassette.

(2) Gently and evenly press the PDC relay wedge down into the relay cassette until both of the latches are fully engaged.

(3) Install each of the removed relays into the proper cavities of the PDC relay wedge.

(4) Install the PDC housing lower cover.

POWER DISTRIBUTION CENTER (Continued)

RELAY CASSETTE

INSTALLATION

(1) Move the faulty PDC relay cassette with its wiring away from the bottom of the PDC housing far enough to allow the replacement relay cassette to be installed into the PDC.

(2) Using the faulty relay cassette as a guide, be certain that the replacement relay cassette is correctly oriented before installing it into the PDC housing.

(3) From the bottom of the PDC housing, align and insert the replacement relay cassette into the PDC. Press the relay cassette up into the PDC until both of the latches are fully engaged.

CAUTION: Proper care must be taken to be certain that the wiring and terminals from the faulty PDC relay cassette are installed in the correct terminal cavities of the replacement relay cassette. To prevent mistakes it is recommended that the wiring and terminals be removed from the faulty relay cassette one cavity at a time, repaired or spliced as necessary, then installed securely into the correct cavity of the replacement relay cassette. If you are not absolutely certain into which cavity a terminal should be installed, refer to Power Distribution in the index of this service manual for the location of complete circuit diagrams covering the PDC.

(4) While pulling gently on the wire from the bottom of the faulty PDC relay cassette, use a terminal pick tool (Special Tool Kit 6680) from the top of the relay cassette to release the latch that secures the terminal in the relay cassette terminal cavity (Fig. 8).

(5) From the bottom of the faulty PDC relay cassette, remove the wire and terminal from the relay cassette terminal cavity.

(6) Make all necessary repairs and splices to the wire for the removed terminal. Refer to **Wiring Repair** in Wiring Diagrams for the location of the wiring repair procedures.

(7) From the bottom of the PDC housing, align and insert the removed wire and terminal into the correct terminal cavity of the replacement relay cassette. Push the wire and terminal up into the relay cassette terminal cavity until it is fully engaged by the latch.

(8) Repeat Step 4, Step 5, Step 6 and Step 7 one wire and terminal at a time until each of the wires and terminals have been transferred from the faulty PDC relay cassette into the replacement relay cassette.

(9) Install the PDC relay wedge into the replacement PDC relay cassette.

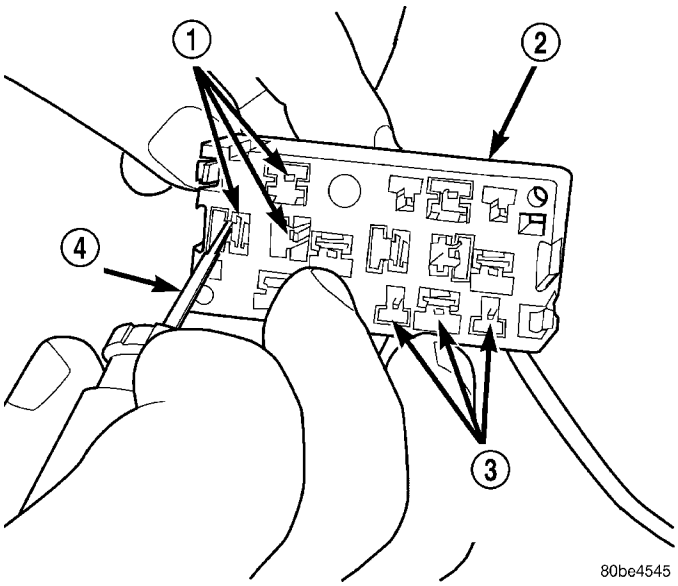

Fig. 8 PDC Relay Cassette Terminal Remove/Install

1 - TERMINAL CAVITIES
2 - PDC RELAY CASSETTE
3 - TERMINAL LATCHES
4 - FROM SPECIAL TOOL KIT 6680

PDC LOWER COVER

INSTALLATION

(1) Align the PDC housing lower cover on the bottom of the PDC.

(2) Evenly press the lower cover into place until latches are fully engaged.

(3) Where the headlamp and dash harness enters the PDC, tape the harness securely to the trough formation on the PDC lower cover.

(4) Install the PDC in its mounting location on the battery support.

(5) Install the battery wire harness over the two PDC B+ terminal studs. Torque the nuts to 11.3 N·m (100 in. lbs.).

(6) Install the battery. Refer to the Battery section for the procedure.

(7) Install the PDC cover.

INSTALLATION

The Power Distribution Center (PDC) main housing unit, the PDC fuse wedges, the PDC mini fuse wedge and the PDC bus bars cannot be repaired and are only serviced as a unit with the right headlamp and dash wire harness. If the PDC main housing unit, the fuse wedges or the bus bars are faulty or damaged, the entire PDC and right headlamp and dash wire harness unit must be replaced.

(1) Position the PDC and the headlamp and dash wire harness unit in the engine compartment.

(2) Engage the PDC housing mounts with the stanchions of the battery tray and push the unit

POWER DISTRIBUTION CENTER (Continued)

downward until the mount latches fully engage the mounting tabs on the stanchions.

(3) Install the two-holed eyelet of the battery wire harness PDC take outs onto the two PDC B(+) terminal studs.

(4) Install and tighten the nuts that secure the eyelet of the battery wire harness PDC take outs to the B(+) terminal studs. Tighten the nuts to 11.3 N·m (100 in. lbs.).

(5) Engage each of the retainers that secure the headlamp and dash wire harness to the vehicle body and chassis components. Refer to **Connector Locations** in Wiring Diagrams for the location of more information on the headlamp and dash wire harness retainer locations.

(6) Install all of the fasteners that secure each of the headlamp and dash wire harness ground eyelets to the vehicle body and chassis components. Refer to **Connector Locations** in Wiring Diagrams for the location of more information on the ground eyelet locations.

(7) Reconnect each of the headlamp and dash wire harness connectors. Refer to **Connector Locations** in Wiring Diagrams for the location of more information on the headlamp and dash wire harness connector locations. For connectors secured with bolts, tighten the screws to 4.3 N·m (38 in. lbs.).

(8) Reconnect the battery negative cable.

POWER OUTLET

DESCRIPTION

One power outlet is installed in the vehicle. It is located in the right rear quarter trim panel. The power outlet base is secured by a snap fit within the trim panel. A plastic protective cap snaps into the power outlet base when the power outlet is not being used, and hangs from the power outlet base mount by an integral bail strap while the power outlet is in use.

The power outlet receptacle unit and the accessory power outlet protective cap are available for service. The power outlet receptacle cannot be repaired and, if faulty or damaged, it must be replaced.

OPERATION

The power outlet base or receptacle shell is connected to ground, and an insulated contact in the bottom of the shell is connected to battery current. The power outlet receives battery voltage from a fuse in the Junction Block at all times.

While the power outlet is very similar to a cigar lighter base unit, it does not include the two small spring-clip retainers inside the bottom of the receptacle shell that are used to secure the cigar lighter heating element to the insulated contact.

DIAGNOSIS AND TESTING - POWER OUTLET

For complete circuit diagrams, refer to **Power Outlet** in Wiring Diagrams.

(1) Check the fused B(+) fuse in the junction block. If OK, go to Step 2. If not OK, repair the shorted circuit or component as required and replace the faulty fuse.

(2) Check for battery voltage at the fused B(+) fuse in the junction block. If OK, go to Step 3. If not OK, repair the open fused B(+) circuit to the battery as required.

(3) Remove the plastic protective cap from the power outlet receptacle. Check for continuity between the inside circumference of the power outlet receptacle and a good ground. There should be continuity. If OK, go to Step 4. If not OK, go to Step 5.

(4) Check for battery voltage at the insulated contact located at the back of the power outlet receptacle. If not OK, go to Step 5.

(5) Disconnect and isolate the battery negative cable. Remove the power outlet receptacle from the instrument panel. Disconnect the wire harness connector from the power outlet receptacle. Check for continuity between the ground circuit cavity of the power outlet wire harness connector and a good ground. There should be continuity. If OK, go to Step 6. If not OK, repair the open ground circuit to ground as required.

(6) Connect the battery negative cable. Check for battery voltage at the fused B(+) circuit cavity of the power outlet wire harness connector. If OK, replace the faulty power outlet receptacle. If not OK, repair the open fused B(+) circuit to the junction block fuse as required.

POWER OUTLET (Continued)

REMOVAL

(1) Disconnect and isolate the battery negative cable.

(2) Pull the cigar lighter knob and element out of the cigar lighter receptacle base, or unsnap the protective cap from the power outlet receptacle base (Fig. 9).

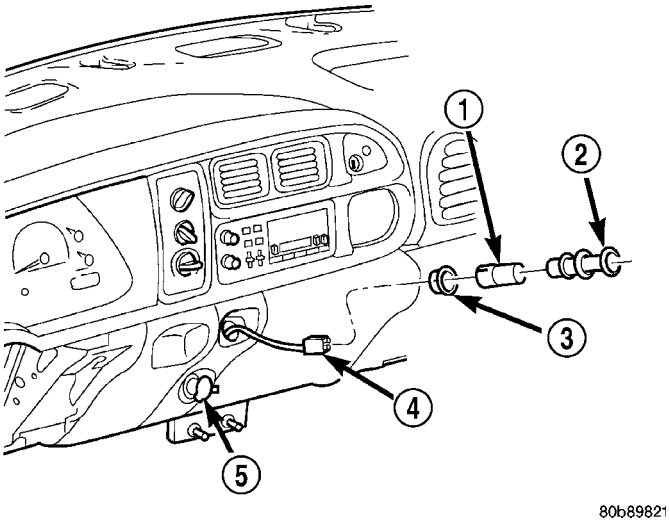

Fig. 9 Cigar Lighter and Power Outlet - Typical

1 - RECEPTACLE BASE
2 - KNOB & ELEMENT
3 - MOUNT
4 - WIRE HARNESS CONNECTOR
5 - POWER OUTLET

(3) Look inside the cigar lighter or power outlet receptacle base and note the position of the rectangular retaining bosses of the mount that secures the receptacle base to the instrument panel (Fig. 10).

(4) Insert a pair of external snap ring pliers into the cigar lighter or power outlet receptacle base and engage the tips of the pliers with the retaining bosses of the mount.

(5) Squeeze the pliers to disengage the mount retaining bosses from the receptacle base and, using a gentle rocking motion, pull the pliers and the receptacle base out of the mount.

(6) Pull the receptacle base away from the instrument panel far enough to access the instrument panel wire harness connector.

(7) Disconnect the instrument panel wire harness connector from the cigar lighter or power outlet receptacle base connector receptacle.

(8) Remove the cigar lighter or power outlet mount from the instrument panel.

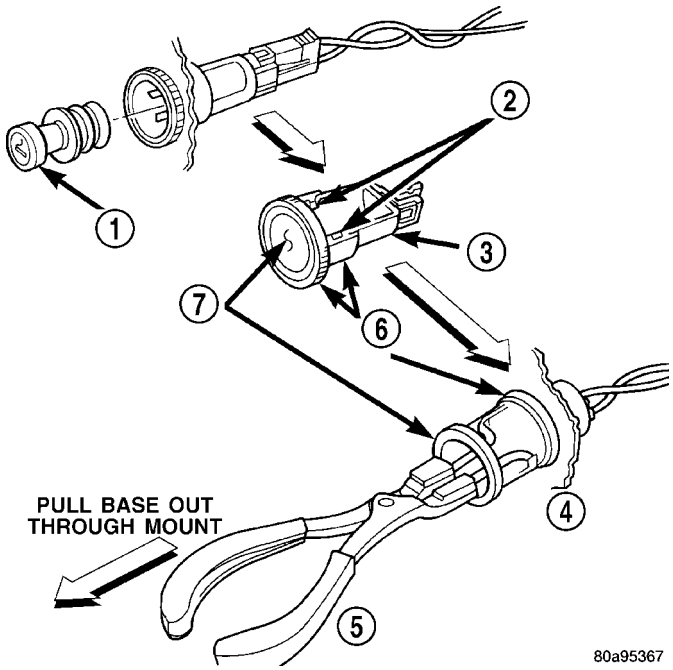

Fig. 10 Cigar Lighter and Power Outlet Remove/ Install

1 - KNOB AND ELEMENT
2 - RETAINING BOSSES-ENGAGE PLIERS HERE
3 - BASE
4 - PARTIALLY REMOVED
5 - EXTERNAL SNAP-RING PLIERS
6 - MOUNT
7 - BASE

INSTALLATION

(1) Reconnect the instrument panel wire harness connector to the cigar lighter or power outlet receptacle base connector receptacle.

(2) Install the cigar lighter or power outlet mount into the instrument panel.

(3) Align the splines on the outside of the cigar lighter or power outlet receptacle base connector receptacle with the grooves on the inside of the mount.

(4) Press firmly on the cigar lighter or power outlet receptacle base until the retaining bosses of the mount are fully engaged in their receptacles.

(5) Install the cigar lighter knob and element into the cigar lighter receptacle base, or the protective cap into the power outlet receptacle base.

(6) Reconnect the battery negative cable.

RELAY

DESCRIPTION

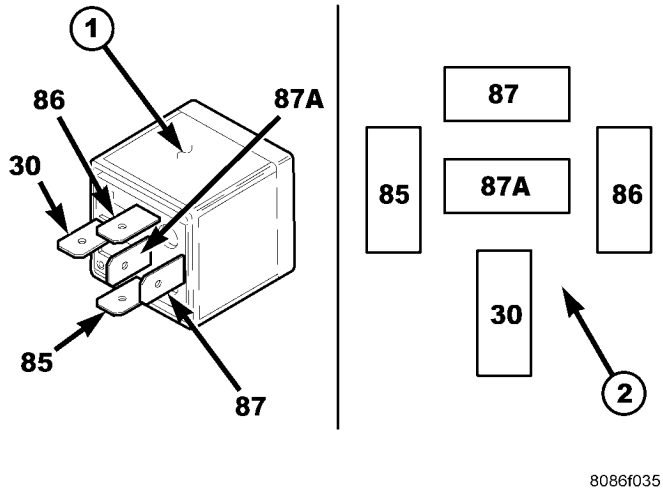

Fig. 11 ISO Relay

30 - COMMON FEED
85 - COIL GROUND
86 - COIL BATTERY
87 - NORMALLY OPEN
87A - NORMALLY CLOSED

A relay is an electromechanical device that switches fused battery current to a electrical component when the ignition switch is turned to the Accessory or Run positions, or when controlled by a electronic module. The relays are located in the junction block or power distribution center (Fig. 11).

The relay is a International Standards Organization (ISO) relay. Relays conforming to the ISO specifications have common physical dimensions, current capacities, terminal patterns, and terminal functions.

A relay cannot be repaired or adjusted and, if faulty or damaged, it must be replaced.

OPERATION

The ISO relay consists of an electromagnetic coil, a resistor and three (two fixed and one movable) electrical contacts. The movable (common feed) relay contact is held against one of the fixed contacts (normally closed) by spring pressure. When the electromagnetic coil is energized, it draws the movable contact away from the normally closed fixed contact, and holds it against the other (normally open) fixed contact.

When the electromagnetic coil is de-energized, spring pressure returns the movable contact to the normally closed position. The resistor is connected in parallel with the electromagnetic coil in the relay, and helps to dissipate voltage spikes that are produced when the coil is de-energized.

DIAGNOSIS AND TESTING - RELAY

The relays are located in the junction block or power distribution center. For complete circuit diagrams, refer to **Wiring Diagrams**.

(1) Remove the relay from its mounting location.

(2) A relay in the de-energized position should have continuity between terminals 87A and 30, and no continuity between terminals 87 and 30. If OK, go to Step 3. If not OK, replace the faulty relay.

(3) Resistance between terminals 85 and 86 (electromagnet) should be 60.7 - 80.3 ohms. If OK, go to Step 4. If not OK, replace the faulty relay.

(4) Connect a battery to terminals 85 and 86. There should now be continuity between terminals 30 and 87, and no continuity between terminals 87A and 30. If OK, perform the Relay Circuit Test that follows. If not OK, replace the faulty relay.

DIAGNOSIS & TESTING - RELAY CIRCUIT TEST

(1) The relay common feed terminal cavity (30) of the junction block or power distribution center is connected to battery voltage and should be hot at all times. Check for battery voltage at the fused B(+) circuit cavity in the junction block receptacle for the relay. If OK, go to Step 2. If not OK, repair the fused B(+) circuit to the Power Distribution Center (PDC) fuse as required.

(2) The relay normally closed terminal (87A) is connected to terminal 30 in the de-energized position, but is not used for this application. Go to Step 3.

(3) The relay normally open terminal (87) is connected to the common feed terminal (30) in the energized position. This terminal supplies battery voltage to the fused B(+) fuse in the junction block that feeds the accessory when the relay is energized by the ignition switch. There should be continuity between the junction block cavity for relay terminal 87 and the fused B(+) fuse in the junction block at all times. If OK, go to Step 4. If not OK, repair the open fused B(+) circuit to the junction block fuse as required.

(4) The coil ground terminal (85) is connected to the electromagnet in the relay. It receives battery feed to energize the relay when the ignition switch is in the Accessory or Run positions. Turn the ignition switch to the On position. Check for battery voltage at the fused ignition switch output (acc/run) circuit cavity for relay terminal 85 in the junction block receptacle for the relay. If OK, go to Step 5. If not OK, repair the open fused ignition switch output (acc/run) circuit to the ignition switch as required.

(5) The coil battery terminal (86) is connected to the electromagnet in the relay. The junction block cavity for this terminal should have continuity to ground at all times. If not OK, repair the open ground circuit to ground as required.

RELAY (Continued)

REMOVAL

(1) Disconnect and isolate the negative battery cable.

(2) Remove the relay by grasping it firmly and pulling it straight out from its receptacle. A slight back and fourth rocking motion may help the removal process.

INSTALLATION

(1) Position the relay to the proper receptacle.

(2) Align the relay terminals with the terminal cavities in the receptacle.

(3) Push firmly and evenly on the top of the relay until the terminals are fully seated in the terminal cavities in the receptacle.

(4) Connect the negative battery cable.

MICRO-RELAY

DESCRIPTION

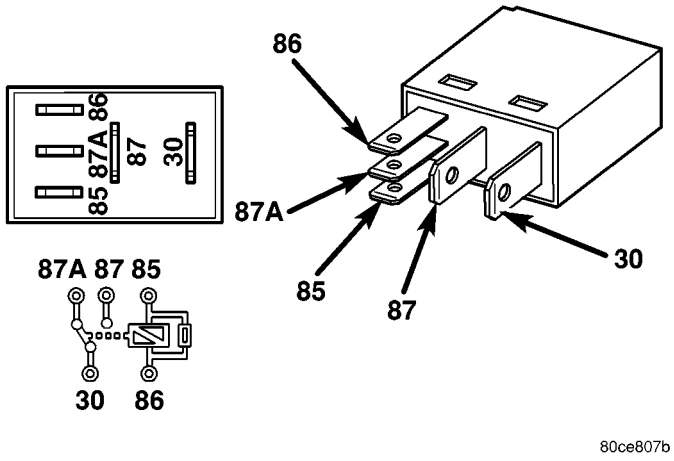

Fig. 12 ISO Micro Relay

30 - COMMON FEED
85 - COIL GROUND
86 - COIL BATTERY
87 - NORMALLY OPEN
87A - NORMALLY CLOSED

A micro-relay is a conventional International Standards Organization (ISO) micro relay (Fig. 12). Relays conforming to the ISO specifications have common physical dimensions, current capacities, terminal patterns, and terminal functions. The relay is contained within a small, rectangular, molded plastic housing and is connected to all of the required inputs and outputs by five integral male spade-type terminals that extend from the bottom of the relay base.

Relays cannot be adjusted or repaired and, if faulty or damaged, the unit must be replaced.

OPERATION

A micro-relay is an electromechanical switch that uses a low current input from one source to control a high current output to another device. The movable common feed contact point is held against the fixed normally closed contact point by spring pressure. When the relay coil is energized, an electromagnetic field is produced by the coil windings. This electromagnetic field draws the movable relay contact point away from the fixed normally closed contact point, and holds it against the fixed normally open contact point. When the relay coil is de-energized, spring pressure returns the movable contact point back against the fixed normally closed contact point. A resistor is connected in parallel with the relay coil in the relay, and helps to dissipate voltage spikes and electromagnetic interference that can be generated as the electromagnetic field of the relay coil collapses.

DIAGNOSIS AND TESTING - MICRO-RELAY

(1) Remove the relay from its mounting location.

(2) A relay in the de-energized position should have continuity between terminals 87A and 30, and no continuity between terminals 87 and 30. If OK, go to Step 3. If not OK, replace the faulty relay.

(3) Resistance between terminals 85 and 86 (electromagnet) should be 67.5 - 82.5 ohms. If OK, go to Step 4. If not OK, replace the faulty relay.

(4) Connect a battery to terminals 85 and 86. There should now be continuity between terminals 30 and 87, and no continuity between terminals 87A and 30. If OK, reinstall the relay and use a DRBIII® scan tool to perform further testing. Refer to the appropriate diagnostic information.

Refer to the appropriate wiring information. The wiring information includes wiring diagrams, proper wire and connector repair procedures, details of wire harness routing and retention, connector pin-out information and location views for the various wire harness connectors, splices and grounds.

REMOVAL

(1) Disconnect and isolate the negative battery cable.

(2) Remove the relay by grasping it firmly and pulling it straight out from its receptacle. A slight back and fourth rocking motion may help the removal process.

INSTALLATION

(1) Align the micro-relay terminals with the terminal cavities in the receptacle.

(2) Push firmly and evenly on the top of the relay until the terminals are fully seated in the terminal cavities in the receptacle.

(3) Connect the battery negative cable.

ENGINE

TABLE OF CONTENTS

page

ENGINE - 2.4L 1
ENGINE - 3.7L 72
2.8L COMMON RAIL DIESEL ENGINE 163

ENGINE - 2.4L

TABLE OF CONTENTS

page

ENGINE - 2.4L
DESCRIPTION 3
DIAGNOSIS AND TESTING
CYLINDER COMBUSTION PRESSURE LEAKAGE TEST 3
CYLINDER COMPRESSION PRESSURE TEST 3
ENGINE OIL LEAK INSPECTION 4
ENGINE DIAGNOSIS 5
ENGINE DIAGNOSIS - PERFORMANCE 6
DIAGNOSIS AND TESTING - ENGINE MECHANICAL 8
STANDARD PROCEDURE
ENGINE CORE AND OIL GALLERY PLUGS . . 10
REPAIR OF DAMAGED OR WORN THREADS 10
HYDROSTATIC LOCKED ENGINE 10
FORM-IN-PLACE GASKETS AND SEALERS . 11
ENGINE GASKET SURFACE PREPARATION . 12
MEASURING BEARING CLEARANCE USING PLASTIGAGE 12
REMOVAL - ENGINE ASSEMBLY 13
INSTALLATION - ENGINE ASSEMBLY 13
SPECIFICATIONS
SPECIFICATIONS - 2.4L ENGINE 14
SPECIFICATIONS - TORQUE 19
SPECIAL TOOLS
2.4L ENGINE 20
AIR CLEANER ELEMENT
REMOVAL - 2.4L 22
INSTALLATION - 2.4L 22
AIR CLEANER HOUSING
REMOVAL 22
INSTALLATION 22
CYLINDER HEAD
DESCRIPTION 22
OPERATION 22
DIAGNOSIS AND TESTING CYLINDER HEAD GASKET 23
REMOVAL - CYLINDER HEAD 23
CLEANING 24
INSPECTION 24
INSTALLATION - CYLINDER HEAD 24
CAMSHAFT OIL SEAL(S)
REMOVAL 26
INSTALLATION 26
CAMSHAFT(S)
DESCRIPTION 27
OPERATION 27
STANDARD PROCEDURE - CAMSHAFT END-PLAY 27
REMOVAL 27
CLEANING 28
INSPECTION 28
INSTALLATION 28
CYLINDER HEAD COVER
REMOVAL 29
CLEANING 29
INSPECTION 29
INSTALLATION 29
INTAKE/EXHAUST VALVES & SEATS
DESCRIPTION 30
CLEANING 30
VALVE SPRINGS
REMOVAL
REMOVAL - CYLINDER HEAD ON 31
REMOVAL - CYLINDER HEAD OFF 31
INSPECTION 31
INSTALLATION
INSTALLATION - CYLINDER HEAD ON 31
INSTALLATION - CYLINDER HEAD OFF 32

HYDRAULIC LIFTERS
DIAGNOSIS AND TESTING
LASH ADJUSTER (TAPPET) NOISE
DIAGNOSIS 32
REMOVAL 33
INSTALLATION 33
ROCKER ARMS
REMOVAL 33
INSPECTION 34
INSTALLATION 34
ENGINE BLOCK
DESCRIPTION 34
STANDARD PROCEDURE
STANDARD PROCEDURE - PISTON TO
CYLINDER BORE FITTING 34
CYLINDER BORE HONING 35
CLEANING 35
INSPECTION 35
CONNECTING ROD BEARINGS
STANDARD PROCEDURE
CONNECTING ROD - FITTING 36
CRANKSHAFT
DESCRIPTION 36
OPERATION 36
STANDARD PROCEDURE - CRANKSHAFT
END PLAY 36
REMOVAL 37
INSPECTION 38
INSTALLATION 38
CRANKSHAFT MAIN BEARINGS
STANDARD PROCEDURE - MAIN BEARING -
FITTING 39
CRANKSHAFT OIL SEAL - FRONT
REMOVAL 41
INSTALLATION 42
CRANKSHAFT OIL SEAL - REAR
REMOVAL 43
INSTALLATION 43
PISTON & CONNECTING ROD
DESCRIPTION 44
OPERATION 44
REMOVAL 44
INSTALLATION 45
PISTON RINGS
STANDARD PROCEDURE
PISTON RING - FITTING 46
VIBRATION DAMPER
REMOVAL 48
INSTALLATION 48
STRUCTURAL COLLAR
REMOVAL 48
INSTALLATION 48
ENGINE MOUNTING
DESCRIPTION 48
FRONT MOUNT
REMOVAL 48
INSTALLATION 49
REAR MOUNT
REMOVAL 49
INSTALLATION 49
LUBRICATION
DESCRIPTION 51
OPERATION 51
DIAGNOSIS AND TESTING
ENGINE OIL PRESSURE CHECKING 51
OIL
STANDARD PROCEDURE
ENGINE OIL LEVEL CHECK 51
ENGINE OIL AND FILTER CHANGE 51
OIL FILTER
DESCRIPTION 52
REMOVAL 52
INSTALLATION 52
OIL PAN
REMOVAL 52
INSTALLATION 53
OIL PRESSURE SENSOR/SWITCH
DESCRIPTION 53
OPERATION 53
OIL PUMP
REMOVAL
REMOVAL 53
REMOVAL 54
DISASSEMBLY 55
CLEANING 55
INSPECTION 56
ASSEMBLY 56
INSTALLATION 57
INTAKE MANIFOLD
DESCRIPTION 58
OPERATION 58
DIAGNOSIS AND TESTING
INTAKE MANIFOLD LEAKS 58
REMOVAL
REMOVAL 58
REMOVAL — LOWER 58
INSPECTION 59
INSTALLATION
INSTALLATION — UPPER 59
INSTALLATION — LOWER 59
EXHAUST MANIFOLD
DESCRIPTION 60
OPERATION 60
REMOVAL 60
CLEANING 60
INSPECTION 60
INSTALLATION 60
TIMING BELT COVER(S)
REMOVAL 60
INSTALLATION 61
TIMING BELT AND SPROCKET(S)
REMOVAL
TIMING BELT 61
CRANKSHAFT SPROCKET 62

CLEANING 62
INSTALLATION
CRANKSHAFT SPROCKET 63
TIMING BELT 63
TIMING BELT TENSIONER & PULLEY
REMOVAL 65
INSTALLATION 65
BALANCE SHAFTS AND CARRIER ASSEMBLY
DESCRIPTION 66
OPERATION 66
REMOVAL 67
INSTALLATION
BALANCE SHAFT TIMING 68
BALANCE SHAFT CARRIER
DESCRIPTION 70
OPERATION 70
REMOVAL 71
INSTALLATION 71
BALANCE SHAFT CHAIN
REMOVAL 71
INSTALLATION 71

ENGINE - 2.4L

DESCRIPTION

The 2.4 Liter (148 cu. in.) in-line four cylinder engine is a double over head camshaft with hydraulic lifters and four valve per cylinder design. The engine is free-wheeling; meaning it has provisions for piston-to-valve clearance. However valve-to-valve interference can occur, if camshafts are rotated independently.

The cylinders are numbered from front of the engine to the rear. The firing order is 1–3–4–2.

The engine identification number is located on the rear of the cylinder block (Fig. 1).

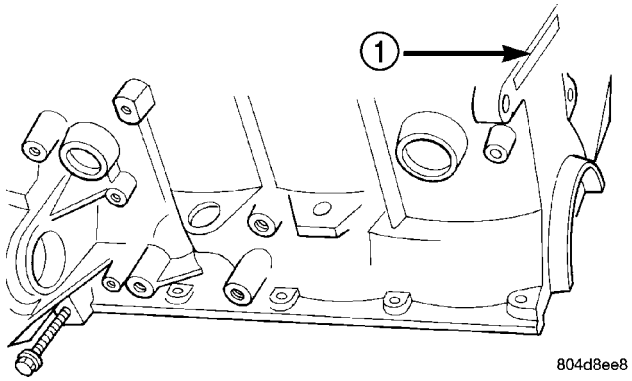

Fig. 1 Engine Identification

1 - ENGINE IDENTIFICATION LOCATION

DIAGNOSIS AND TESTING

CYLINDER COMBUSTION PRESSURE LEAKAGE TEST

The combustion pressure leakage test provides an accurate means for determining engine condition.

Combustion pressure leakage testing will detect:

- Exhaust and intake valve leaks (improper seating).
- Leaks between adjacent cylinders or into water jacket.
- Any causes for combustion/compression pressure loss.

WARNING: DO NOT REMOVE THE PRESSURE CAP WITH THE SYSTEM HOT AND UNDER PRESSURE BECAUSE SERIOUS BURNS FROM COOLANT CAN OCCUR.

Check the coolant level and fill as required. DO NOT install the pressure cap.

Start and operate the engine until it attains normal operating temperature, then turn the engine OFF.

Clean spark plug recesses with compressed air.

Remove the spark plugs.

Remove the oil filler cap.

Remove the air cleaner.

Calibrate the tester according to the manufacturer's instructions. The shop air source for testing should maintain 483 kPa (70 psi) minimum, 1,379 kPa (200 psi) maximum, with 552 kPa (80 psi) recommended.

Perform the test procedures on each cylinder according to the tester manufacturer's instructions. While testing, listen for pressurized air escaping through the throttle body, tailpipe and oil filler cap opening. Check for bubbles in the coolant.

All gauge pressure indications should be equal, with no more than 25% leakage per cylinder.

FOR EXAMPLE: At 552 kPa (80 psi) input pressure, a minimum of 414 kPa (60 psi) should be maintained in the cylinder.

CYLINDER COMPRESSION PRESSURE TEST

The results of a cylinder compression pressure test can be utilized to diagnose several engine malfunctions.

Ensure the battery is completely charged and the engine starter motor is in good operating condition. Otherwise the indicated compression pressures may not be valid for diagnosis purposes.

(1) Check engine oil level and add oil if necessary.

(2) Drive the vehicle until engine reaches normal operating temperature. Select a route free from traffic and other forms of congestion, observe all traffic laws, and accelerate through the gears several times briskly.

(3) Remove all spark plugs from engine. As spark plugs are being removed, check electrodes for abnormal firing indicators fouled, hot, oily, etc. Record cylinder number of spark plug for future reference.

(4) Remove the Auto Shutdown (ASD) relay from the PDC.

(5) Be sure throttle blade is fully open during the compression check.

(6) Insert compression gage adaptor Special Tool 8116 or the equivalent, into the #1 spark plug hole in cylinder head. Connect the 0–500 psi (Blue) pressure transducer with cable adaptors to the DRBIII®.

(7) Crank engine until maximum pressure is reached on gage. Record this pressure as #1 cylinder pressure.

(8) Repeat the previous step for all remaining cylinders.

(9) Compression should not be less than 689 kPa (100 psi) and not vary more than 25 percent from cylinder to cylinder.

(10) If one or more cylinders have abnormally low compression pressures, repeat the compression test.

(11) If the same cylinder or cylinders repeat an abnormally low reading on the second compression test, it could indicate the existence of a problem in the cylinder in question. **The recommended compression pressures are to be used only as a guide to diagnosing engine problems. An engine should not be disassembled to determine the cause of low compression unless some malfunction is present.**

ENGINE OIL LEAK INSPECTION

Begin with a thorough visual inspection of the engine, particularly at the area of the suspected leak. If an oil leak source is not readily identifiable, the following steps should be followed:

(1) Do not clean or degrease the engine at this time because some solvents may cause rubber to swell, temporarily stopping the leak.

(2) Add an oil soluble dye (use as recommended by manufacturer). Start the engine and let idle for approximately 15 minutes. Check the oil dipstick to make sure the dye is thoroughly mixed as indicated with a bright yellow color under a black light.

(3) Using a black light, inspect the entire engine for fluorescent dye, particularly at the suspected area of oil leak. If the oil leak is found and identified, repair as necessary.

(4) If dye is not observed, drive the vehicle at various speeds for approximately 24 km (15 miles), and repeat inspection.

(5) **If the oil leak source is not positively identified at this time**, proceed with the air leak detection test method as follows:

- Disconnect the fresh air hose (make-up air) at the cylinder head cover and plug or cap the nipple on the cover.
- Remove the PCV valve hose from the cylinder head cover. Cap or plug the PCV valve nipple on the cover.
- Attach an air hose with pressure gauge and regulator to the dipstick tube.

CAUTION: Do not subject the engine assembly to more than 20.6 kpa (3 PSI) of test pressure.

- Gradually apply air pressure from 1 psi to 2.5 psi maximum while applying soapy water at the suspected source. Adjust the regulator to the suitable test pressure that provides the best bubbles which will pinpoint the leak source. If the oil leak is detected and identified, repair per service manual procedures.
- If the leakage occurs at the crankshaft rear oil seal area, refer to the section, Inspection for Rear Seal Area Leak.

(6) If no leaks are detected, turn off the air supply. Remove the air hose, all plugs, and caps. Install the PCV valve and fresh air hose (make-up air). Proceed to next step.

(7) Clean the oil off the suspect oil leak area using a suitable solvent. Drive the vehicle at various speeds approximately 24 km (15 miles). Inspect the engine for signs of an oil leak by using a black light.

NOTE: If oil leakage is observed at the dipstick tube to block location; remove the tube, clean and reseal using Mopar® Stud & Bearing Mount (press fit tube applications only), and for O-ring style tubes, remove tube and replace the O-ring seal.

INSPECTION FOR REAR SEAL AREA LEAKS

Since it is sometimes difficult to determine the source of an oil leak in the rear seal area of the engine, a more involved inspection is necessary. The following steps should be followed to help pinpoint the source of the leak.

If the leakage occurs at the crankshaft rear oil seal area:

(1) Disconnect the battery.

(2) Raise the vehicle.

(3) Remove torque converter or clutch housing cover and inspect rear of block for evidence of oil. Use a black light to check for the oil leak. If a leak is present in this area, remove transmission for further inspection.

(a) Circular spray pattern generally indicates seal leakage or crankshaft damage.

(b) Where leakage tends to run straight down, possible causes are a porous block, oil gallery cup

ENGINE - 2.4L (Continued)

plug, bedplate to cylinder block mating surfaces and seal bore. See proper repair procedures for these items.

(4) If no leaks are detected, pressurize the crankcase as previously described.

CAUTION: Do not exceed 20.6 kPa (3 psi).

(5) If the leak is not detected, very slowly turn the crankshaft and watch for leakage. If a leak is detected between the crankshaft and seal while slowly turning the crankshaft, it is possible the crankshaft seal surface is damaged. The seal area on the crankshaft could have minor nicks or scratches that can be polished out with emery cloth.

CAUTION: Use extreme caution when crankshaft polishing is necessary to remove minor nicks and scratches. The crankshaft seal flange is especially machined to complement the function of the rear oil seal.

(6) For bubbles that remain steady with shaft rotation, no further inspection can be done until disassembled.

(7) After the oil leak root cause and appropriate corrective action have been identified, replace component(s) as necessary.

ENGINE DIAGNOSIS

Engine diagnosis is helpful in determining the causes of malfunctions not detected and remedied by routine maintenance.

These malfunctions may be classified as either mechanical (e.g., a strange noise), or performance (e.g., engine idles rough and stalls).

Refer to the Engine Mechanical and the Engine Performance diagnostic charts, for possible causes and corrections of malfunctions (Refer to 9 - ENGINE - DIAGNOSIS AND TESTING - MECHANICAL) (Refer to 9 - ENGINE - DIAGNOSIS AND TESTING - PERFORMANCE).

For fuel system diagnosis, (Refer to 14 - FUEL SYSTEM/FUEL DELIVERY - DIAGNOSIS AND TESTING).

Additional tests and diagnostic procedures may be necessary for specific engine malfunctions that cannot be isolated with the Service Diagnosis charts. Information concerning additional tests and diagnosis is provided within the following:

- Cylinder Compression Pressure Test
- Cylinder Combustion Pressure Leakage Test
- Engine Cylinder Head Gasket Failure Diagnosis
- Intake Manifold Leakage Diagnosis
- Lash Adjuster (Tappet) Noise Diagnosis
- Engine Oil Leak Inspection

ENGINE - 2.4L (Continued)

ENGINE DIAGNOSIS - PERFORMANCE

CONDITION	POSSIBLE CAUSE	CORRECTION
ENGINE WILL NOT START	1. Weak battery.	1. Test battery. Charge or replace as necessary. (Refer to 8 - ELECTRICAL/BATTERY SYSTEM - DIAGNOSIS AND TESTING)
	2. Corroded or loose battery connections.	2. Clean and tighten battery connections. Apply a coat of light mineral grease to terminals.
	3. Faulty starter.	3. Test starting system. (Refer to 8 - ELECTRICAL/STARTING - DIAGNOSIS AND TESTING)
	4. Faulty coil(s) or control unit.	4. Test and replace as needed. (Refer to Appropriate Diagnostic Information)
	5. Incorrect spark plug gap.	5. Set gap. (Refer to 8 - ELECTRICAL/IGNITION CONTROL - SPECIFICATIONS)
	6. Contamination in fuel system.	6. Clean system and replace fuel filter.
	7. Faulty fuel pump.	7. Test fuel pump and replace as needed. (Refer to Appropriate Diagnostic Information)
	8. Incorrect engine timing.	8. Check for a skipped timing belt/chain.
ENGINE STALLS OR IDLES ROUGH	1. Idle speed too low.	1. Test minimum air flow. (Refer to Appropriate Diagnostic Information)
	2. Incorrect fuel mixture.	2. (Refer to Appropriate Diagnostic Information)
	3. Intake manifold leakage.	3. Inspect intake manifold, manifold gasket, and vacuum hoses.
	4. Faulty ignition coil(s).	4. Test and replace as necessary. (Refer to Appropriate Diagnostic Information)

ENGINE - 2.4L (Continued)

CONDITION	POSSIBLE CAUSE	CORRECTION
ENGINE LOSS OF POWER	1. Dirty or incorrectly gapped plugs.	1. Clean plugs and set gap.
	2. Contamination in fuel system.	2. Clean system and replace fuel filter.
	3. Faulty fuel pump.	3. Test and replace as necessary. (Refer to Appropriate Diagnostic Information)
	4. Incorrect valve timing.	4. Correct valve timing.
	5. Leaking cylinder head gasket.	5. Replace cylinder head gasket.
	6. Low compression.	6. Test compression of each cylinder.
	7. Burned, warped, or pitted valves.	7. Replace valves.
	8. Plugged or restricted exhaust system.	8. Perform exhaust restriction test. (Refer to 11 - EXHAUST SYSTEM - DIAGNOSIS AND TESTING) Install new parts, as necessary.
	9. Faulty ignition coil(s).	9. Test and replace as necessary. (Refer to Appropriate Diagnostic Information)
ENGINE MISSES ON ACCELERATION	1. Dirty or incorrectly gapped spark plugs.	1. Clean spark plugs and set gap.
	2. Contamination in Fuel System.	2. Clean fuel system and replace fuel filter.
	3. Burned, warped, or pitted valves.	3. Replace valves.
	4. Faulty ignition coil(s).	4. Test and replace as necessary. (Refer to Appropriate Diagnostic Information)
ENGINE MISSES AT HIGH SPEED	1. Dirty or incorrect spark plug gap.	1. Clean spark plugs and set gap.
	2. Faulty ignition coil(s).	2. Test and replace as necessary. (Refer to Appropriate Diagnostic Information)
	3. Dirty fuel injector(s).	Test and replace as necessary. (Refer to Appropriate Diagnostic Information)
	4. Contamination in fuel system.	4. Clean system and replace fuel filter.

ENGINE - 2.4L (Continued)

DIAGNOSIS AND TESTING - ENGINE MECHANICAL

CONDITION	POSSIBLE CAUSES	CORRECTION
VALVETRAIN NOISE	1. High or low oil level in crankcase.	1. Check and correct engine oil level.
	2. Thin or diluted oil.	2. Change oil to correct viscosity.
	3. Thick oil	3. (a) Change engine oil and filter. (b) Run engine to operating temperature. (c) Change engine oil and filter again.
	4. Low oil pressure.	4. Check and correct engine oil level.
	5. Dirt in tappets/lash adjusters.	5. Replace rocker arm/hydraulic lash adjuster assembly.
	6. Worn rocker arms.	6. Inspect oil supply to rocker arms.
	7. Worn tappets/lash adjusters.	7. Install new rocker arm/hydraulic lash adjuster assembly.
	8. Worn valve guides.	8. Replace cylinder head assembly.
	9. Excessive runout of valve seats on valve faces.	9. Grind valve seats and valves.
	10. Missing adjuster pivot.	10. Replace rocker arm/hydraulic lash adjuster assembly.
CONNECTING ROD NOISE	1. Insufficient oil supply.	1. Check engine oil level.
	2. Low oil pressure.	2. Check engine oil level. Inspect oil pump relief valve and spring.
	3. Thin or diluted oil.	3. Change oil to correct viscosity.
	4. Thick oil	4. (a) Change engine oil and filter. (b) Run engine to operating temperature. (c) Change engine oil and filter again.
	5. Excessive bearing clearance.	5. Measure bearings for correct clearance. Repair as necessary.
	6. Connecting rod journal out-of-round.	6. Replace crankshaft or grind surface.
	7. Misaligned connecting rods.	7. Replace bent connecting rods.

ENGINE - 2.4L (Continued)

CONDITION	POSSIBLE CAUSES	CORRECTION
MAIN BEARING NOISE	1. Insufficient oil supply.	1. Check engine oil level.
	2. Low oil pressure.	2. Check engine oil level. Inspect oil pump relief valve and spring.
	3. Thin or diluted oil.	3. Change oil to correct viscosity.
	4. Thick oil	4. (a) Change engine oil and filter. (b) Run engine to operating temperature. (c) Change engine oil and filter again.
	5. Excessive bearing clearance.	5. Measure bearings for correct clearance. Repair as necessary.
	6. Excessive end play.	6. Check thrust bearing for wear on flanges.
	7. Crankshaft journal out-of-round or worn.	7. Replace crankshaft or grind journals.
	8. Loose flywheel or torque converter.	8. Tighten to correct torque.
OIL PRESSURE DROP	1. Low oil level.	1. Check engine oil level.
	2. Faulty oil pressure sending unit.	2. Install new sending unit.
	3. Low oil pressure.	3. Check sending unit and main bearing oil clearance.
	4. Clogged oil filter.	4. Install new oil filter.
	5. Worn parts in oil pump.	5. Replace worn parts or pump.
	6. Thin or diluted oil.	6. Change oil to correct viscosity.
	7. Oil pump relief valve stuck.	7. Replace oil pump.
	8. Oil pump suction tube loose.	8. Remove oil pan and install new tube or clean, if necessary.
	9. Oil pump cover warped or cracked.	9. Install new oil pump.
	10. Excessive bearing clearance.	10. Measure bearings for correct clearance.
OIL LEAKS	1. Misaligned or deteriorated gaskets.	1. Replace gasket(s).
	2. Loose fastener, broken or porous metal part.	2. Tighten, repair or replace the part.
	3. Misaligned or deteriorated cup or threaded plug.	3. Replace as necessary.

ENGINE - 2.4L (Continued)

CONDITION	POSSIBLE CAUSES	CORRECTION
OIL CONSUMPTION OR SPARK PLUGS FOULED	1. PCV system malfunction.	1. Check system and repair as necessary. (Refer to 25 - EMISSIONS CONTROL/EVAPORATIVE EMISSIONS/PCV VALVE - DIAGNOSIS AND TESTING)
	2. Worn, scuffed or broken rings.	2. Hone cylinder bores. Install new rings.
	3. Carbon in oil ring slots.	3. Install new rings.
	4. Rings fitted too tightly in grooves.	4. Remove rings and check grooves. If groove is not proper width, replace piston.
	5. Worn valve guide(s).	5. Replace cylinder head assembly.
	6. Valve stem seal(s) worn or damaged.	6. Replace seal(s).

STANDARD PROCEDURE

ENGINE CORE AND OIL GALLERY PLUGS

Using a blunt tool such as a drift and a hammer, strike the bottom edge of the cup plug. With the cup plug rotated, grasp firmly with pliers or other suitable tool and remove plug (Fig. 2).

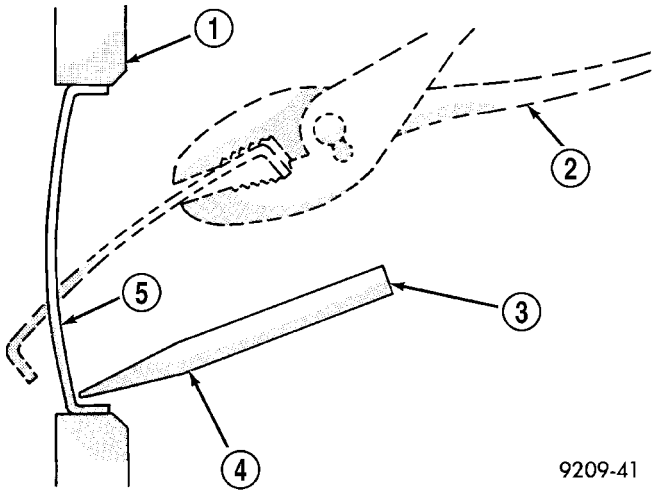

Fig. 2 Core Hole Plug Removal

1 - CYLINDER BLOCK
2 - REMOVE PLUG WITH PLIERS
3 - STRIKE HERE WITH HAMMER
4 - DRIFT PUNCH
5 - CUP PLUG

CAUTION: Do not drive cup plug into the casting as restricted cooling can result and cause serious engine problems.

Thoroughly clean inside of cup plug hole in cylinder block or head. Be sure to remove old sealer. Lightly coat inside of cup plug hole with Mopar® Stud and Bearing Mount. Make certain the new plug is cleaned of all oil or grease. Using proper drive plug, drive plug into hole so that the sharp edge of the plug is at least 0.5 mm (0.020 in.) inside the lead-in chamfer.

It is not necessary to wait for curing of the sealant. The cooling system can be refilled and the vehicle placed in service immediately.

REPAIR OF DAMAGED OR WORN THREADS

Damaged or worn threads (excluding spark plug and camshaft bearing cap attaching threads) can be repaired. Essentially, this repair consists of drilling out worn or damaged threads, tapping the hole with a special Heli-Coil Tap, (or equivalent) and installing an insert into the tapped hole. This brings the hole back to its original thread size.

CAUTION: Be sure that the tapped holes maintain the original center line.

Heli-Coil tools and inserts are readily available from automotive parts jobbers.

HYDROSTATIC LOCKED ENGINE

When an engine is suspected to be hydrostatically locked, regardless of what caused the problem, the following steps should be used.

CAUTION: DO NOT use starter motor to rotate the engine, severe damage may occur.

(1) Inspect air cleaner, induction system and intake manifold to insure system is dry and clear of foreign material.

(2) Remove negative battery cable.

(3) Place a shop towel around the spark plugs when removing them from the engine. This will catch

ENGINE - 2.4L (Continued)

any fluid that may possibly be in the cylinder under pressure.

(4) With all spark plugs removed, rotate engine crankshaft using a breaker bar and socket.

(5) Identify the fluid in the cylinder(s) (i.e., coolant, fuel, oil or other).

(6) Make sure all fluid has been removed from the cylinders. Inspect engine for damage (i.e., connecting rods, pistons, valves, etc.)

(7) Repair engine or components as necessary to prevent this problem from re-occurring.

CAUTION: Squirt approximately one teaspoon of oil into the cylinders, rotate engine to lubricate the cylinder walls to prevent damage on restart.

(8) Install new spark plugs.

(9) Drain engine oil and remove oil filter.

(10) Install a new oil filter.

(11) Fill engine with specified amount of approved oil.

(12) Connect negative battery cable.

(13) Start engine and check for any leaks.

FORM-IN-PLACE GASKETS AND SEALERS

There are numerous places where form-in-place gaskets are used on the engine. Care must be taken when applying form-in-place gaskets to assure obtaining the desired results. **Do not use form-in-place gasket material unless specified.** Bead size, continuity, and location are of great importance. Too thin a bead can result in leakage while too much can result in spill-over which can break off and obstruct fluid feed lines. A continuous bead of the proper width is essential to obtain a leak-free gasket.

There are numerous types of form-in-place gasket materials that are used in the engine area. Mopar® Engine RTV GEN II, Mopar® ATF-RTV, and Mopar® Gasket Maker gasket materials, each have different properties and can not be used in place of the other.

MOPAR® ENGINE RTV GEN II is used to seal components exposed to engine oil. This material is a specially designed black silicone rubber RTV that retains adhesion and sealing properties when exposed to engine oil. Moisture in the air causes the material to cure. This material is available in three ounce tubes and has a shelf life of one year. After one year this material will not properly cure. Always inspect the package for the expiration date before use.

MOPAR® ATF RTV is a specifically designed black silicone rubber RTV that retains adhesion and sealing properties to seal components exposed to automatic transmission fluid, engine coolants, and moisture. This material is available in three ounce tubes and has a shelf life of one year. After one year this material will not properly cure. Always inspect the package for the expiration date before use.

MOPAR® GASKET MAKER is an anaerobic type gasket material. The material cures in the absence of air when squeezed between two metallic surfaces. It will not cure if left in the uncovered tube. The anaerobic material is for use between two machined surfaces. Do not use on flexible metal flanges.

MOPAR® BED PLATE SEALANT is a unique (green-in-color) anaerobic type gasket material that is specially made to seal the area between the bedplate and cylinder block without disturbing the bearing clearance or alignment of these components. The material cures slowly in the absence of air when torqued between two metallic surfaces, and will rapidly cure when heat is applied.

MOPAR® GASKET SEALANT is a slow drying, permanently soft sealer. This material is recommended for sealing threaded fittings and gaskets against leakage of oil and coolant. Can be used on threaded and machined parts under all temperatures. This material is used on engines with multi-layer steel (MLS) cylinder head gaskets. This material also will prevent corrosion. Mopar® Gasket Sealant is available in a 13 oz. aerosol can or 4oz./16 oz. can w/applicator.

SEALER APPLICATION

Mopar® Gasket Maker material should be applied sparingly 1 mm (0.040 in.) diameter or less of sealant to one gasket surface. Be certain the material surrounds each mounting hole. Excess material can easily be wiped off. Components should be torqued in place within 15 minutes. The use of a locating dowel is recommended during assembly to prevent smearing material off the location.

Mopar® Engine RTV GEN II or ATF RTV gasket material should be applied in a continuous bead approximately 3 mm (0.120 in.) in diameter. All mounting holes must be circled. For corner sealing, a 3.17 or 6.35 mm (1/8 or 1/4 in.) drop is placed in the center of the gasket contact area. Uncured sealant may be removed with a shop towel. Components should be torqued in place while the sealant is still wet to the touch (within 10 minutes). The usage of a locating dowel is recommended during assembly to prevent smearing material off the location.

Mopar® Gasket Sealant in an aerosol can should be applied using a thin, even coat sprayed completely over both surfaces to be joined, and both sides of a gasket. Then proceed with assembly. Material in a can w/applicator can be brushed on evenly over the sealing surfaces. Material in an aerosol can should be used on engines with multi-layer steel gaskets.

ENGINE - 2.4L (Continued)

ENGINE GASKET SURFACE PREPARATION

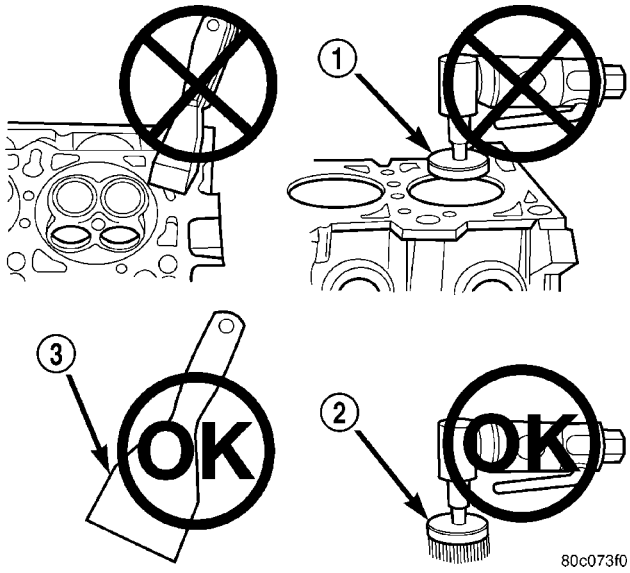

Fig. 3 Proper Tool Usage For Surface Preparation

1 - ABRASIVE PAD
2 - 3M ROLOC™ BRISTLE DISC
3 - PLASTIC/WOOD SCRAPER

To ensure engine gasket sealing, proper surface preparation must be performed, especially with the use of aluminum engine components and multi-layer steel cylinder head gaskets.

Never use the following to clean gasket surfaces: (Fig. 3)

- Metal scraper.
- Abrasive pad or paper to clean cylinder block and head.
- High speed power tool with an abrasive pad or a wire brush.

NOTE: Multi-Layer Steel (MLS) head gaskets require a scratch free sealing surface.

Only use the following for cleaning gasket surfaces: (Fig. 3)

- Solvent or a commercially available gasket remover
- Plastic or wood scraper.
- Drill motor with 3M Roloc™ Bristle Disc (white or yellow).

CAUTION: Excessive pressure or high RPM (beyond the recommended speed), can damage the sealing surfaces. The mild (white, 120 grit) bristle disc is recommended. If necessary, the medium (yellow, 80 grit) bristle disc may be used on cast iron surfaces with care.

MEASURING BEARING CLEARANCE USING PLASTIGAGE

Engine crankshaft bearing clearances can be determined by use of Plastigage or equivalent. The following is the recommended procedure for the use of Plastigage:

(1) Remove oil film from surface to be checked. Plastigage is soluble in oil.

(2) Place a piece of Plastigage across the entire width of the bearing shell in the cap approximately 6.35 mm (1/4 in.) off center and away from the oil holes (Fig. 4). (In addition, suspected areas can be checked by placing the Plastigage in the suspected area). Torque the bearing cap bolts of the bearing being checked to the proper specifications.

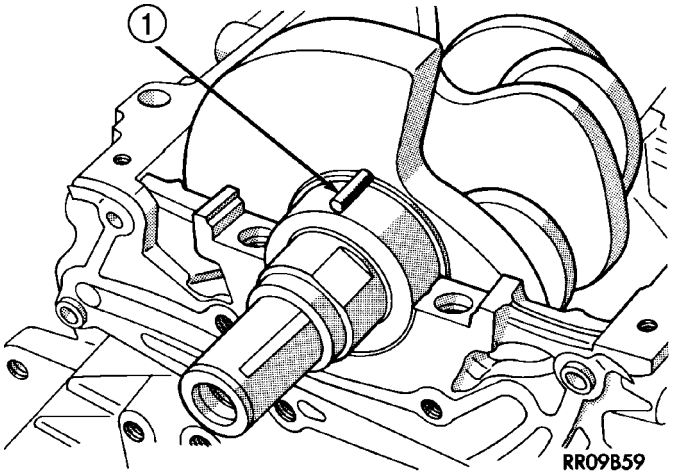

Fig. 4 Plastigage Placed in Lower Shell - Typical

1 - PLASTIGAGE

(3) Remove the bearing cap and compare the width of the flattened Plastigage with the metric scale provided on the package. Locate the band closest to the same width. This band shows the amount of clearance in thousandths of a millimeter. Differences in readings between the ends indicate the amount of taper present. Record all readings taken. Compare clearance measurements to specs found in engine specifications (Refer to 9 - ENGINE - SPECIFICATIONS). **Plastigage generally is accompanied by two scales. One scale is in inches, the other is a metric scale.**

NOTE: Plastigage is available in a variety of clearance ranges. Use the most appropriate range for the specifications you are checking.

(4) Install the proper crankshaft bearings to achieve the specified bearing clearances. (Refer to 9 - ENGINE/ENGINE BLOCK/CRANKSHAFT MAIN BEARINGS - STANDARD PROCEDURE) (Refer to 9

ENGINE - 2.4L (Continued)

- ENGINE/ENGINE BLOCK/CONNECTING ROD BEARINGS - STANDARD PROCEDURE)

REMOVAL - ENGINE ASSEMBLY

(1) Disconnect the battery negative cable.
(2) Remove hood. Mark hood hinge location for reinstallation.
(3) Remove air cleaner assembly.
(4) Remove radiator core support bracket.
(5) Remove fan shroud with electric fan assembly.
(6) Remove drive belt.

NOTE: It is NOT necessary to discharge the A/C system to remove the engine.

(7) Remove A/C compressor and secure away from engine with lines attached.
(8) Remove generator and secure away from engine.

NOTE: Do NOT remove the phenolic pulley from the P/S pump. It is not required for P/S pump removal.

(9) Remove power steering pump with lines attached and secure away from engine.
(10) Drain cooling system.
(11) Remove coolant bottle.
(12) Disconnect the heater hoses from the engine.
(13) Disconnect heater hoses from heater core and remove hose assembly.
(14) Disconnect throttle and speed control cables.
(15) Remove upper radiator hose from engine.
(16) Remove lower radiator hose from engine.
(17) Disconnect the engine to body ground straps at the left side of cowl.
(18) Disconnect the engine wiring harness at the following points:

- Intake air temperature (IAT) sensor
- Fuel Injectors
- Throttle Position (TPS) Switch
- Idle Air Control (IAC) Motor
- Engine Oil Pressure Switch
- Engine Coolant Temperature (ECT) Sensor
- Manifold Absolute Pressure MAP) Sensor
- Camshaft Position (CMP) Sensor
- Coil Over Plugs
- Crankshaft Position Sensor

(19) Remove coil over plugs.
(20) Release fuel rail pressure.
(21) Remove fuel rail and secure away from engine.
(22) Remove the PCV hose.
(23) Remove the breather hoses.
(24) Remove the vacuum hose for the power brake booster.
(25) Disconnect knock sensors.
(26) Secure the left and right engine wiring harnesses away from engine.
(27) Raise vehicle.
(28) Disconnect oxygen sensor wiring.
(29) Disconnect crankshaft position sensor.
(30) Disconnect the engine block heater power cable, if equipped.
(31) Disconnect the front propshaft at the front differential and secure out of way.
(32) Remove the starter.
(33) Remove the ground straps from the engine
(34) Disconnect the exhaust pipes at the manifold.
(35) Remove the structural cover, if equipped.
(36) Remove torque convertor bolts, and mark location for reassembly.
(37) Remove transmission bellhousing to engine bolts.
(38) Loosen left and right engine mount thru bolts.

NOTE: It is not necessary to completely remove engine mount thru bolts, for engine removal.

(39) Lower the vehicle.
(40) Support the transmission with a suitable jack.
(41) Connect a suitable engine hoist to the engine.

CAUTION: The 2.4L engine with manual transmissions, can be removed without removing the manual transmission. Use caution when attempting this procedure as the clearance is tight.

(42) Remove engine from vehicle.

INSTALLATION - ENGINE ASSEMBLY

(1) Position the engine in the vehicle.

CAUTION: Use caution when installing 2.4L engine into vehicle equipped with manual transmission, as clearance is tight.

(2) Install both left and right side engine mounts into the frame mounts.
(3) Raise the vehicle.
(4) Install the transmission bellhousing to engine mounting bolts. Tighten the bolts to 41 N·m (30 ft. lbs.).
(5) Tighten the engine mount thru bolts.
(6) Install the torque convertor bolts.
(7) Connect the ground straps on the left and right side of the engine.
(8) Install the starter.
(9) Connect the crankshaft position sensor.
(10) Install the engine block heater power cable, if equipped.

ENGINE - 2.4L (Continued)

CAUTION: The structural cover requires a specific torque sequence. Failure to follow this sequence may cause severe damage to the cover.

(11) Install the structural cover.
(12) Install the exhaust pipe.
(13) Connect the oxygen sensors.
(14) Lower vehicle.
(15) Connect the knock sensors.
(16) Connect the engine to body ground straps.
(17) Install the power brake booster vacuum hose.
(18) Install the breather hoses.
(19) Install the PCV hose.
(20) Install the fuel rail.
(21) Install the coil over plugs.
(22) Reconnect the engine wiring harness at the following points:

- Intake air temperature (IAT) sensor
- Fuel Injectors
- Throttle Position (TPS) Switch
- Idle Air Control (IAC) Motor
- Engine Oil Pressure Switch
- Engine Coolant Temperature (ECT) Sensor
- Manifold Absolute Pressure MAP) Sensor
- Camshaft Position (CMP) Sensor
- Coil Over Plugs
- Crankshaft Position Sensor

(23) Connect lower radiator hose.
(24) Connect upper radiator hose.
(25) Connect throttle and speed control cables.
(26) Install the heater hose assembly.
(27) Install coolant recovery bottle.
(28) Install the power steering pump.
(29) Install the generator.
(30) Install the A/C compressor.
(31) Install the drive belt.
(32) Install the fan shroud with the electric fan assembly.
(33) Install the radiator core support bracket.
(34) Install the air cleaner assembly.
(35) Refill the engine cooling system.
(36) Install the hood.
(37) Check and fill engine oil.
(38) Connect the battery negative cable.
(39) Start the engine and check for leaks.

SPECIFICATIONS

SPECIFICATIONS - 2.4L ENGINE

GENERAL SPECIFICATIONS

DESCRIPTION	SPECIFICATION	
Type	In-Line OHV, DOHC	
Number of Cylinders	4	
Firing Order	1-3-4-2	
Compression Ratio	9.5:1	
Max. Variation Between Cylinders	25%	
	Metric	**Standard**
Displacement	2.4 Liters	148 cu. in.
Bore	87.5 mm	3.445 in.
Stroke	101.0 mm	3.976 in.
Compression Pressure	1172-1551 kPa	170-225 psi

CYLINDER BLOCK

DESCRIPTION	SPECIFICATIONS	
	Metric	**Standard**
Cylinder Bore Diameter	87.4924 - 87.5076 mm	3.4446 - 3.4452 in.
Out-of-Round (Max.)	0.051 mm	0.002 in.
Taper (Max.)	0.051 mm	0.002 in.

ENGINE - 2.4L (Continued)

PISTONS

DESCRIPTION	SPECIFICATION	
	Metric	Standard
Piston Diameter	87.456 - 87.474 mm	3.4431 -3.4439 in.
Clearance @ 24.6 mm (0.551 in.) from bottom of skirt	0.018 - 0.0516 mm	0.0007 - 0.0020 in.
Weight	345 - 355 grams	12.17 - 12.52 oz.
Land Clearance (Diametrical)	0.563 - 0.621 mm	0.022 - 0.024 in.
Piston Length	66.25 mm	2.608 in.
Piston Ring Groove Depth No. 1	3.946 - 4.045mm	0.155 - 0.159 in.
Piston Ring Groove Depth No. 2	4.555 - 4.680 mm	0.179 - 0.184 in.
Piston Ring Groove Depth No. 3	4.108 - 4.220 mm	0.162 - 0.166 in.

PISTON PINS

DESCRIPTION	SPECIFICATION	
	Metric	Standard
Clearance in Piston	0.005 - 0.018 mm	0.0002 - 0.0008 in.
Clearance in Connecting Rod	Interference	
Diameter	21.998 - 22.003 mm	0.8660 - 0.8662 in.
End Play	None	
Length	72.75 - 73.25 mm	2.864 - 2.883 in.

PISTON RINGS

DESCRIPTION	SPECIFICATION	
	Metric	Standard
Ring Gap		
Top Compression Ring	0.25 - 0.51 mm	0.0098 - 0.020 in.
Wear Limit	0.8 mm	0.031 in.
2nd Compression Ring	0.23 - 0.48 mm	0.009 - 0.018 in.
Wear Limit	0.8 mm	0.031 in.
Oil Control Steel Rails	0.25 - 0.64 mm	0.0098 - 0.025 in.
Wear Limit	1.00 mm	0.039 in.
Compression Rings	0.030 - 0.080 mm	0.0011 - 0.0031 in.
Wear Limit	0.10 mm	0.004 in.
Ring Side Clearance - Oil Ring Pack	0.012 - 0.178 mm	0.0004 - 0.0070 in.
Ring Width - Compression Rings	1.47 - 1.50 mm	0.057 - 0.059 in.
Ring Width - Oil Ring Pack	2.72 - 2.88 mm	0.107 - 0.1133 in.

CONNECTING ROD

DESCRIPTION	SPECIFICATION	
	Metric	Standard
Bearing Clearance	0.025 - 0.071 mm	0.0009 - 0.0027 in.
Wear Limit	0.075 mm	0.003 in.
Bore Diameter - Piston Pin	20.96 - 20.98 mm	0.8252 - 0.8260 in.
Bore Diameter - Crankshaft End	53.007 - 52.993 mm	2.0868 - 2.0863 in.
Side Clearance	0.13 - 0.38 mm	0.005 - 0.015 in.
Wear Limit	0.40 mm	0.016 in.
Weight - Total (Less Bearing)	565.8 grams	19.96 oz.

ENGINE - 2.4L (Continued)

CRANKSHAFT

DESCRIPTION	SPECIFICATION	
	Metric	Standard
Connecting Rod Journal Diameter	49.984 - 50.000 mm	1.968 - 1.9685 in.
Main Bearing Journal Diameter	59.992 - 60.008 mm	2.362 - 2.3625 in.
Journal Out-of-Round (Max.)	0.0035 mm	0.0003 in.
Journal Taper (Max.)	0.007 mm	0.0001 in.
End Play	0.09 - 0.24 mm	0.0035 - 0.0094 in.
Wear Limit	0.38 mm	0.015 in.
Main Bearing Diametrical Clearance	0.018 - 0.062 mm	0.0007 - 0.0024 in.

HYDRAULIC LASH ADJUSTER

DESCRIPTION	SPECIFICATION	
	Metric	Standard
Body Diameter	15.901 - 15.913 mm	0.626 - 0.6264 in.
Plunger Travel Minimum (Dry)	3.0 mm	0.118 in.

CYLINDER HEAD CAMSHAFT BEARING BORE DIAMETER

DSECRIPTION	SPECIFICATION	
	Metric	Standard
Journals No.1 - 6	26.020 - 26.041 mm	1.024 - 1.025 in.

CAMSHAFT

DESCRIPTION	SPECIFICATION	
	Metric	Standard
Journal Diameter No. 1 - 6	25.976 - 25.995 mm	1.022 - 1.023 in.
Bearing Clearance - Diametrical	0.025 - 0.065 mm	0.0009 - 0.0025 in.
End Play	0.05 - 0.17 mm	0.0019 - 0.0066 in.
Lift (Zero Lash)		
Intake	8.25 mm	0.324 in.
Exhaust	6.60 mm	0.259 in.
Intake Valve Timing*		
Closes (ABDC)	44.3°	
Opens (ATDC)	6.2°	
Duration	218.1°	
Exhaust Valve Timing*		
Closes (ATDC)	0.8°	
Opens (BBDC)	39.9°	
Duration	220.7°	
Valve Overlap	5.4°	

*
All reading in crankshaft degrees at 0.5 mm (0.019 in.) valve lift.

CYLINDER HEAD

DESCRIPTION	SPECIFICATION	
	Metric	Standard
Material	Cast Aluminum	
Gasket Thickness (Compressed)	0.71 mm	0.028 in.

ENGINE - 2.4L (Continued)

VALVE SEAT

DESCRIPTION	SPECIFICATION	
	Metric	Standard
Angle	44.5 - 45°	
Seat Diameter - Intake	34.37 - 34.63 mm	1.353 - 1.363 in.
Seat Diameter - Exhaust	27.06 - 27.32 mm	1.065 - 1.075 in.
Runout (Max.)	0.05 mm	0.002 in.
Valve Seat Width - Intake and Exhaust	0.9 - 1.3 mm	0.035 - 0.051 in.
Service Limit - Intake	2.0 mm	0.079 in.
Service Limit - Exhaust	2.5 mm	0.098 in.

VALVE GUIDE

DESCRIPTION	SPECIFICATION	
	Metric	Standard
Diameter I.D.	5.975 - 6.000 mm	0.235 - 0.236 in.
Guide Bore Diameter	11.0 - 11.02 mm	0.4330 - 0.4338 in.
Guide Height (spring seat to guide tip)	13.25 - 13.75 mm	0.521 - 0.541 in.

VALVES

DESCRIPTION	SPECIFICATION	
	Metric	Standard
Face Angle - Intake and Exhaust	44.5 - 45°	
Head Diameter - Intake	34.67 - 34.93 mm	1.364 - 1.375 in.
Head Diameter - Exhaust	28.32 - 28.52 mm	1.114 - 1.122 in.
Valve Length (Overall)		
Intake	112.76 - 113.32 mm	4.439 - 4.461 in.
Exhaust	110.89 - 111.69 mm	4.365 - 4.397 in.
Valve Stem Diameter		
Intake	5.934 - 5.952 mm	0.2337 - 0.2344 in.
Exhaust	5.906 - 5.924 mm	0.2326 - 0.2333 in.

VALVE MARGIN

DESCRIPTION	SPECIFICATION	
	Metric	Standard
Intake	1.2 - 1.7 mm	0.047 - 0.066 in.
Service Limit	0.95 mm	.0037 in.
Exhaust	0.985 - 1.315 mm	0.038 - 0.051 in.
Service Limit	1.05 mm	.039 in.

VALVE STEM TIP HEIGHT

DESCRIPTION	SPECIFICATION	
	Metric	Standard
Intake	48.04 mm	1.891 in.
Exhaust	47.99 mm	1.889 in.

ENGINE - 2.4L (Continued)

VALVE STEM TO GUIDE CLEARANCE

DESCRIPTION	SPECIFICATION	
	Metric	Standard
Intake	0.048 - 0.066 mm	0.0018 - 0.0025 in.
Max. Allowable	0.076 mm	0.003 in.
Service Limit	0.25 mm	0.010 in.
Exhaust	0.0736 - 0.094 mm	0.0029 - 0.0037 in.
Max. Allowable	0.101 mm	0.004 in.
Service Limit	0.25 mm	0.010 in.

VALVE SPRINGS

DESCRIPTION	SPECIFICATION	
	Metric	Standard
Free Length (Approx.)	49.2 mm	1.937 in.
Nominal Force (Valve Closed)	334 ±17 N @ 38.0 mm	75.08 ±3.8 lbs. @ 1.496 in.
Nominal Force (Valve Open)	598 ±30N @ 29.75 mm	134 ±6.7 lbs. @ 1.171 in.
Installed Height	38.00 mm	1.496 in.
Number of Coils	6.9	
Wire Diameter	3.61 mm	0.142 in

OIL PUMP

DESCRIPTION	SPECIFICATION	
	Metric	Standard
Clearance Over Rotors (Max.)	0.10 mm	0.004 in.
Cover Out-of-Flat (Max.)	0.025 mm	0.001 in.
Inner Rotor Thickness (Min.)	10.699 mm	0.421 in.
Outer Rotor Thickness (Min.)	10.699 mm	0.421 in.
Outer Rotor Clearance (Max.)	0.039 mm	0.015 in.
Outer Rotor Diameter (Min.)	85.924 mm	3.383 in.
Tip Clearance Between Rotors (Max.)	0.20 mm	0.008 in.

OIL PRESSURE

DESCRIPTION	SPECIFICATION	
	Metric	Standard
At Curb Idle Speed*	25 kPa	4 psi
At 3000 rpm	170 - 550 kPa	25 - 80 psi
CAUTION: *If pressure is ZERO at curb idle, DO NOT run engine at 3000 rpm.		

ENGINE - 2.4L (Continued)

SPECIFICATIONS - TORQUE

DESCRIPTION	N·m	Ft. Lbs.	In. Lbs.
Bolts, Balance Shaft Carrier to Block	54	40	-
Fastener - Double Ended, Balance Shaft Gear Cover	12	-	105
Bolt, Balance Shaft Sprocket	28	-	250
Bolts, Balance Shaft Chain Tensioner	12	-	105
Bolts, Balance Shaft Carrier Cover	12	-	105
Bolt, Camshaft Sprocket	115	85	-
Bolts, Connecting Rod Cap	27 +¼ turn	20 +¼ turn	-
Bolts, Crankshaft Main Bearing Cap/Bedplate			
M8 Bolts	28	-	250
M11 Bolts	75	55	-
Crankshaft Damper	136	100	-
Bolts, Cylinder Head	(Refer to 9 - ENGINE/ CYLINDER HEAD - INSTALLATION)		
Bolts, Cylinder Head Cover	12	-	105
Flex Plate to Crankshaft	95	70	-
Flywheel Mounting Bolts	81	60	-
Bolts, Engine Mount Bracket Right	61	45	-

DESCRIPTION	N·m	Ft. Lbs.	In. Lbs.
Bolts, Engine Mounting	(Refer to 9 ENGINE/ ENGINE MOUNTING)		
Bolts, Exhaust Manifold to Cylinder Head	23	-	200
Bolts, Exhaust Manifold Heat Shield	12	-	105
Bolts, Intake Manifold - Lower	28	-	250
Oil Filter	20	15	-
Bolts, Oil Pan	12	-	105
Plug, Oil Pan Drain	27	20	-
Bolts, Oil Pump to Block	28	-	250
Bolts, Oil Pump Cover Plate	12	-	105
Bolt, Oil Pump Pick-up Tube	28	20	-
Cap - Oil Pump Relief Valve	41	30	-
Spark Plugs	18	13	-
Bolts, Timing Belt Covers			
- Front Covers to Rear Covers	12	-	105
- Rear Cover	12	-	105
Bolts, Timing Belt Tensioner Assembly	61	45	-

ENGINE - 2.4L (Continued)

SPECIAL TOOLS

2.4L ENGINE

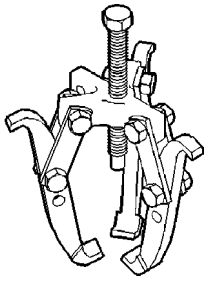

Puller 1026

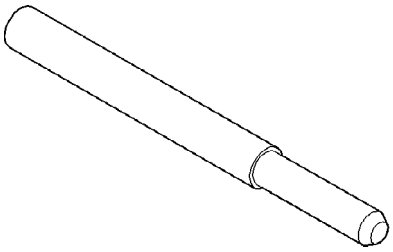

Crankshaft Damper Removal Insert 6827-A

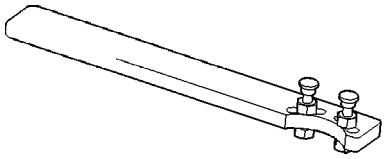

Camshaft Sprocket Holder 6847

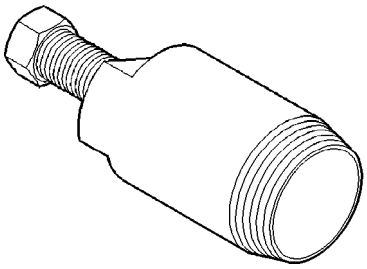

Camshaft Seal Remover C-4679-A

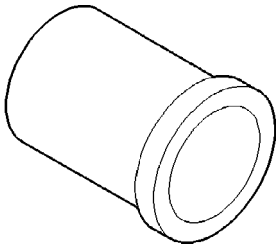

Camshaft Seal Installer MD-998306

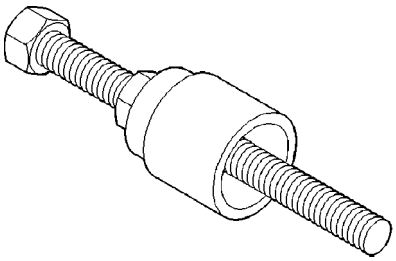

Crankshaft Damper Installer 6792

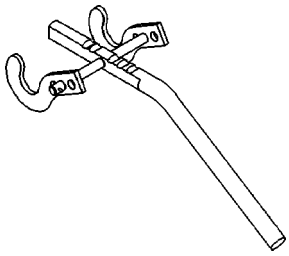

Valve Spring Compressor 8215

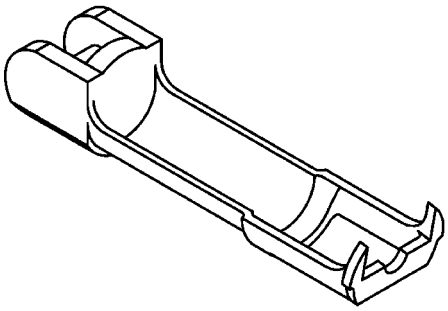

Adaptor 8436

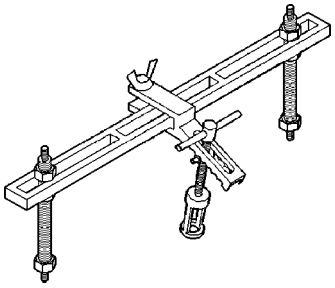

Valve Spring Compressor MD-998772-A

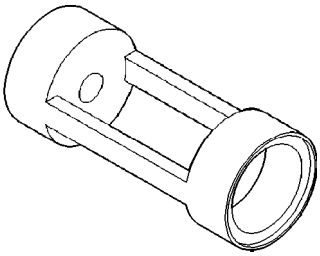

Valve Spring Compressor Adapter 6779

ENGINE - 2.4L (Continued)

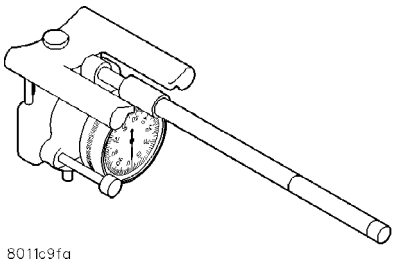

Cylinder Bore Gage C-119

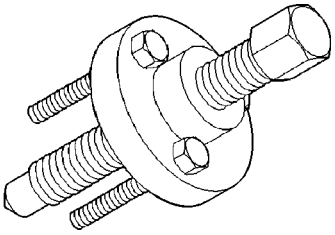

Crankshaft Sprocket Remover 6793

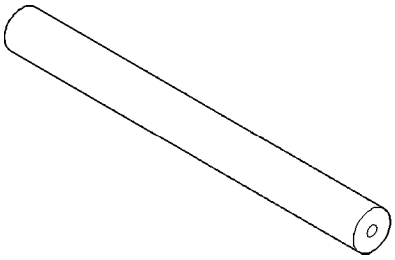

Crankshaft Sprocket Remover Insert C-4685-C2

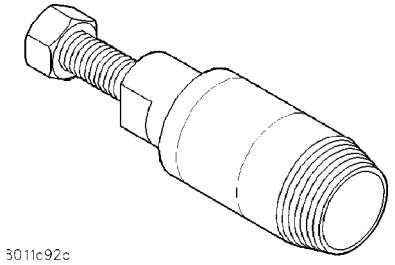

Crankshaft Seal Remover 6771

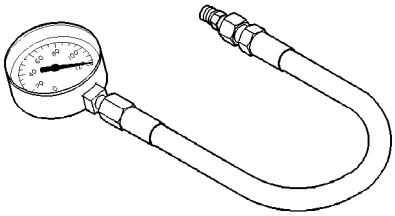

Oil Pressure Gauge C-3292

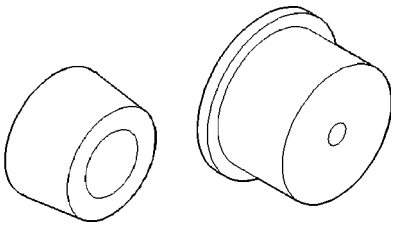

Rear Crankshaft Seal Guide and Installer 6926-1 and 6926-2

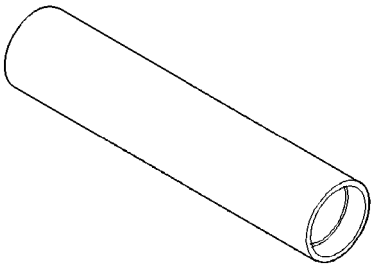

Balance Shaft Sprocket Installer 6052

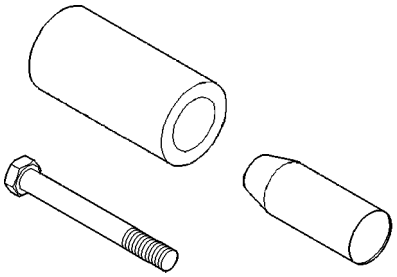

Front Crankshaft Oil Seal Installer 6780

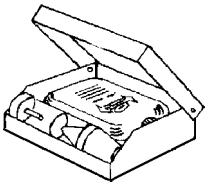

Combustion Leak Tester C-3685-A

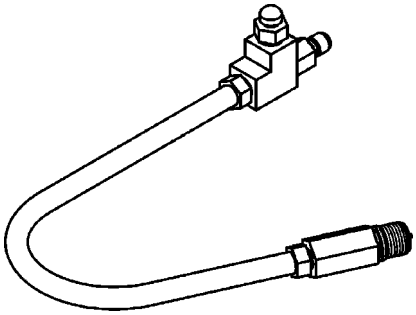

Cylinder Compression Pressure Adaptor 8116

AIR CLEANER ELEMENT

REMOVAL - 2.4L

Housing removal is not necessary for element (filter) replacement.

(1) Disconnect air intake duct at side of element cover.

(2) Pry up 2 spring clips from front of housing cover (spring clips retain cover to housing).

(3) Release housing cover from locating tabs located on rear of housing, and remove cover.

(4) Remove air cleaner element (filter) from housing.

(5) Clean inside of housing before replacing element.

INSTALLATION - 2.4L

(1) Install element into housing.

(2) Position housing cover into housing locating tabs.

(3) Pry up spring clips and lock cover to housing.

(4) Connect air intake duct.

If any air filter, air resonator, air intake tubes or air filter housing clamps had been loosened or removed, tighten them to 5 N·m (40 in. lbs.) torque.

AIR CLEANER HOUSING

REMOVAL

(1) Disconnect the mass airflow connector.

(2) Remove the air outlet hose from the air cleaner assembly.

(3) Pry up two spring clips from front of housing cover (spring clips retain cover to housing).

(4) Release housing cover from locating tabs located on rear of housing, and remove cover.

(5) Remove the air cleaner element.

(6) Remove the air inlet duct.

(7) Remove vent tube.

(8) Remove mounting nut.

(9) Pulling upward, remove the air cleaner housing.

INSTALLATION

(1) Position the air cleaner housing in vehicle.

(2) Push down on the housing to engage the locking gromments.

(3) Install mounting nut. Torque to 10 N·m (88 in. lbs.)

(4) Install vent tube.

(5) Install the air cleaner element.

(6) Position housing cover into housing locating tabs.

(7) Pry up spring clips and lock cover to housing.

(8) Install the air outlet tube.

(9) Connect air intake duct.

(10) Connect the mass airflow sensor connector

CYLINDER HEAD

DESCRIPTION

The cross flow designed, aluminum cylinder head contains dual over-head camshafts with four valves per cylinder (Fig. 5). The valves are arrange in two in-line banks. The intake valves face toward the left side of the vehicle. The exhaust valves face the right side. The cylinder head incorporates powdered metal valve guides and seats. The cylinder head is sealed to the block using a multi-layer steel head gasket and retaining bolts.

Integral oil galleries providing lubrication passages to the hydraulic lash adjusters, camshafts, and valve mechanisms.

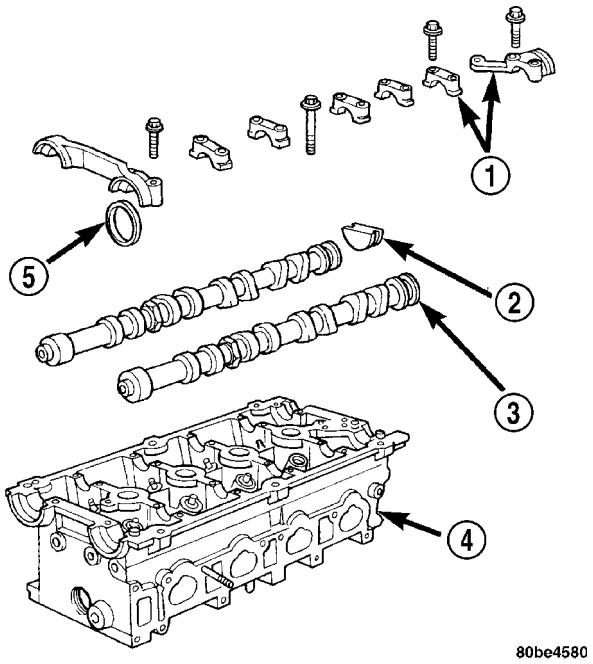

Fig. 5 Cylinder Head and Camshafts

1 - CAMSHAFT BEARING CAPS
2 - PLUG
3 - CAMSHAFT
4 - CYLINDER HEAD
5 - CAMSHAFT OIL SEAL

OPERATION

The cylinder head closes the combustion chamber, allowing the pistons to compress the fuel/air mixture for ignition. The valves are actuated by the lobe profiles on the camshaft to open and close at specified duration to either allow clean air in the combustion chamber or the exhaust gases out; depending on the stroke of the engine.

CYLINDER HEAD (Continued)

DIAGNOSIS AND TESTING

CYLINDER HEAD GASKET

A cylinder head gasket leak can be located between adjacent cylinders or between a cylinder and the adjacent water jacket.

Possible indications of the cylinder head gasket leaking between adjacent cylinders are:

- Loss of engine power
- Engine misfiring
- Poor fuel economy

Possible indications of the cylinder head gasket leaking between a cylinder and an adjacent water jacket are:

- Engine overheating
- Loss of coolant
- Excessive steam (white smoke) emitting from exhaust
- Coolant foaming

CYLINDER-TO-CYLINDER LEAKAGE TEST

To determine if an engine cylinder head gasket is leaking between adjacent cylinders, follow the procedures in Cylinder Compression Pressure Test (Refer to 9 - ENGINE - DIAGNOSIS AND TESTING). An engine cylinder head gasket leaking between adjacent cylinders will result in approximately a 50 - 70% reduction in compression pressure.

CYLINDER-TO-WATER JACKET LEAKAGE TEST

WARNING: USE EXTREME CAUTION WHEN THE ENGINE IS OPERATING WITH COOLANT PRESSURE CAP REMOVED.

VISUAL TEST METHOD

With the engine cool, remove the coolant pressure cap. Start the engine and allow it to warm up until thermostat opens.

If a large combustion/compression pressure leak exists, bubbles will be visible in the coolant.

COOLING SYSTEM TESTER METHOD

WARNING: WITH COOLING SYSTEM TESTER IN PLACE, PRESSURE WILL BUILD UP FAST. EXCESSIVE PRESSURE BUILT UP, BY CONTINUOUS ENGINE OPERATION, MUST BE RELEASED TO A SAFE PRESSURE POINT. NEVER PERMIT PRESSURE TO EXCEED 138 kPa (20 psi).

Install Cooling System Tester 7700 or equivalent to pressure cap neck. Start the engine and observe the tester's pressure gauge. If gauge pulsates with every power stroke of a cylinder a combustion pressure leak is evident.

CHEMICAL TEST METHOD

Combustion leaks into the cooling system can also be checked by using Bloc-Chek Kit C-3685-A or equivalent. Perform test following the procedures supplied with the tool kit.

REMOVAL - CYLINDER HEAD

(1) Perform fuel system pressure release procedure **before attempting any repairs.** (Refer to 14 - FUEL SYSTEM/FUEL DELIVERY - SPECIFICATIONS)

(2) Disconnect battery negative cable.

(3) Drain cooling system. (Refer to 7 - COOLING - STANDARD PROCEDURE)

(4) Remove air filter housing and inlet tube.

(5) Remove intake manifold.

(6) Remove heater tube support bracket from cylinder head.

(7) Disconnect radiator upper and heater supply hoses from water outlet connections.

(8) Remove accessory drive belts. (Refer to 7 - COOLING/ACCESSORY DRIVE/DRIVE BELTS - REMOVAL)

(9) Raise vehicle and remove exhaust pipe from manifold.

(10) Remove power steering pump and set aside. Do not disconnect lines.

(11) Remove accessory drive bracket

(12) Remove ignition coil and wires from engine.

(13) Disconnect cam sensor and fuel injector wiring connectors.

(14) Remove timing belt and camshaft sprockets. (Refer to 9 - ENGINE/VALVE TIMING/TIMING BELT/CHAIN AND SPROCKETS - REMOVAL)

(15) Remove timing belt idler pulley and rear timing belt cover. (Refer to 9 - ENGINE/VALVE TIMING/TIMING BELT / CHAIN COVER(S) - REMOVAL)

(16) Remove cylinder head cover. (Refer to 9 - ENGINE/CYLINDER HEAD/CYLINDER HEAD COVER(S) - REMOVAL)

(17) Remove camshafts (Refer to 9 - ENGINE/CYLINDER HEAD/CAMSHAFT(S) - REMOVAL).

NOTE: Identify rocker arm position to ensure correct re-installation in original position, if reused.

(18) Remove rocker arms. (Refer to 9 - ENGINE/CYLINDER HEAD/ROCKER ARMS - REMOVAL).

(19) Remove cylinder head bolts in REVERSE sequence of tightening.

(20) Remove cylinder head from engine block.

(21) Inspect and clean cylinder head. (Refer to 9 - ENGINE/CYLINDER HEAD - INSPECTION) (Refer to 9 - ENGINE/CYLINDER HEAD - CLEANING)

CYLINDER HEAD (Continued)

CLEANING

To ensure engine gasket sealing, proper surface preparation must be performed, especially with the use of aluminum engine components and multi-layer steel cylinder head gaskets.

NOTE: Multi-Layer Steel (MLS) head gaskets require a scratch free sealing surface.

Remove all gasket material from cylinder head and block (Refer to 9 - ENGINE - STANDARD PROCEDURE). Be careful not to gouge or scratch the aluminum head sealing surface.

Clean all engine oil passages.

INSPECTION

(1) Cylinder head must be flat within 0.1 mm (0.004 in.) (Fig. 6).

(2) Inspect camshaft bearing journals for scoring.

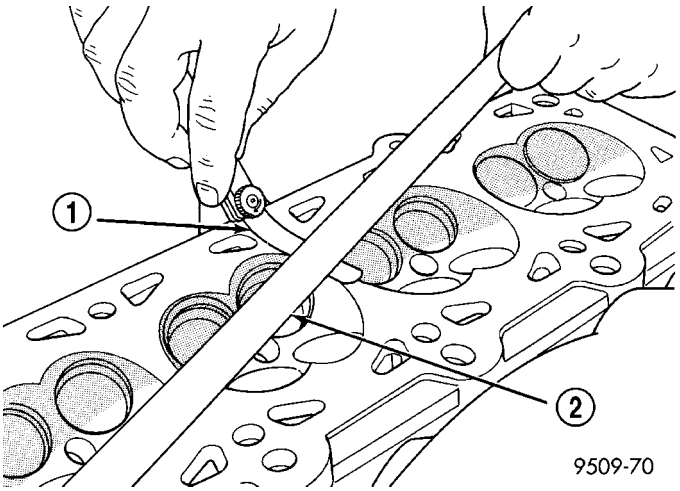

Fig. 6 Checking Cylinder Head Flatness

1 - FEELER GAUGE
2 - STRAIGHT EDGE

(3) Remove carbon and varnish deposits from inside of valve guides with a reliable guide cleaner.

(4) Using a small hole gauge and a micrometer, measure valve guides in 3 places top, middle and bottom (Fig. 7). (Refer to 9 - ENGINE - SPECIFICATIONS) Replace guides if they are not within specification.

(5) Check valve guide height (Fig. 8).

INSTALLATION - CYLINDER HEAD

NOTE: The Cylinder head bolts should be examined BEFORE reuse. If the threads are necked down, the bolts must be replaced (Fig. 9).

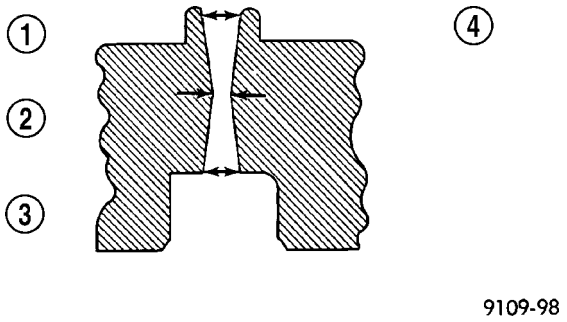

Fig. 7 Checking Wear on Valve Guide - Typical

1 - TOP
2 - MIDDLE
3 - BOTTOM
4 - CUT AWAY VIEW OF VALVE GUIDE MEASUREMENT LOCATIONS

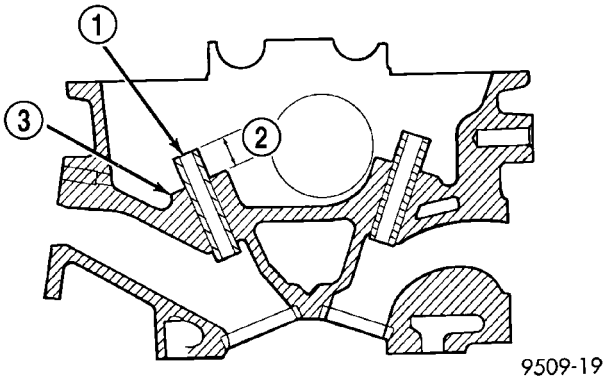

Fig. 8 Valve Guide Height

1 - VALVE GUIDE
2 - 13.25 - 13.75 MM (.521 - .541 IN.)
3 - SPRING SEAT

Necking can be checked by holding a scale or straight edge against the threads. If all the threads do not contact the scale, the bolt should be replaced.

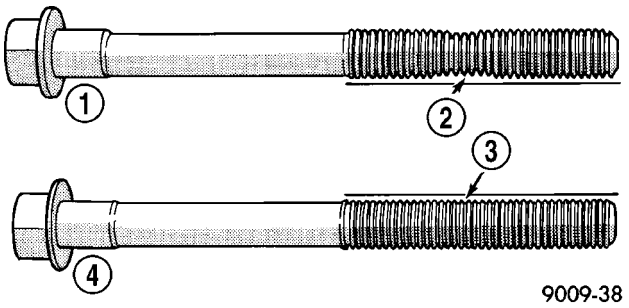

Fig. 9 Checking Bolts for Stretching (Necking)

1 - STRETCHED BOLT
2 - THREADS ARE NOT STRAIGHT ON LINE
3 - THREADS ARE STRAIGHT ON LINE
4 - UNSTRETCHED BOLT

CYLINDER HEAD (Continued)

(1) Before installing the bolts, the threads should be coated with engine oil.

(2) Position cylinder head gasket on engine block (Fig. 10).

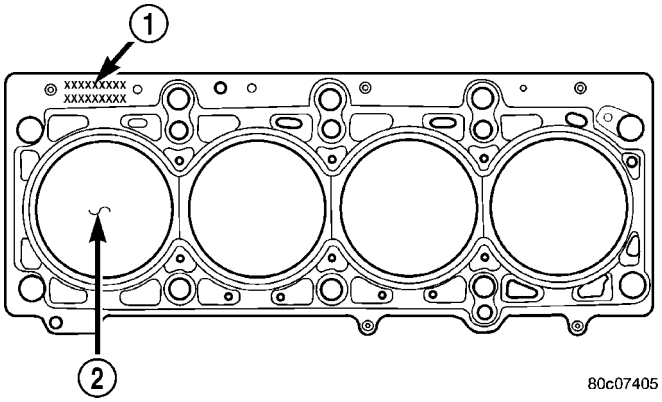

Fig. 10 Cylinder Head Gasket Positioning

1 - PART NUMBER FACES UP
2 - NO. 1 CYLINDER

(3) Install cylinder head on engine block.

(4) Tighten the cylinder head bolts in the sequence shown in (Fig. 11). Using the 4 step torque turn method, tighten according to the following values:

- First All to 34 N·m (25 ft. lbs.)
- Second All to 68 N·m (50 ft. lbs.)
- Third All to 68 N·m (50 ft. lbs.)

CAUTION: Do not use a torque wrench for the following step.

- Fourth Turn an additional 1/4 Turn,

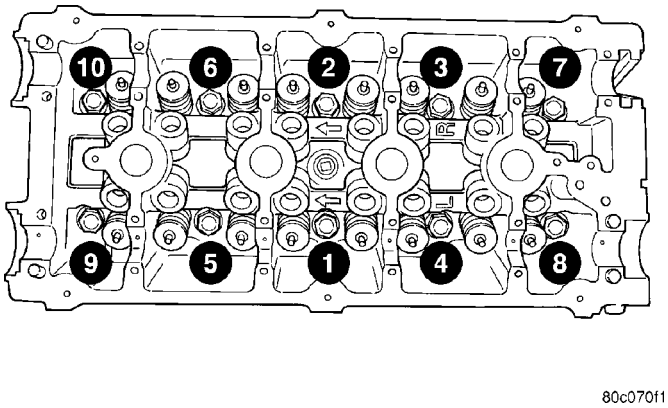

Fig. 11 Cylinder Head Tightening Sequence

(5) Install rocker arms. (Refer to 9 - ENGINE/CYLINDER HEAD/ROCKER ARMS - INSTALLATION)

(6) Install camshafts. (Refer to 9 - ENGINE/CYLINDER HEAD/CAMSHAFT(S) - INSTALLATION).

(7) Install cylinder head cover. (Refer to 9 - ENGINE/CYLINDER HEAD/CYLINDER HEAD COVER(S) - INSTALLATION)

(8) Install timing belt rear cover and timing belt idler pulley. (Refer to 9 - ENGINE/VALVE TIMING/TIMING BELT / CHAIN COVER(S) - INSTALLATION)

(9) Install timing belt and camshaft sprockets. (Refer to 9 - ENGINE/VALVE TIMING/TIMING BELT/CHAIN AND SPROCKETS - INSTALLATION)

(10) Connect cam sensor and fuel injectors wiring connectors.

(11) Install ignition coil and wires. Connect ignition coil wiring connector.

(12) Install accessary drive bracket.

(13) Install power steering pump to cylinder head.

(14) Raise vehicle and install the exhaust pipe to the manifold.

(15) Install accessory drive belts. (Refer to 7 - COOLING/ACCESSORY DRIVE/DRIVE BELTS - INSTALLATION)

(16) Install heater tube support bracket to cylinder head.

(17) Install intake manifold.

(18) Connect all vacuum lines, electrical wiring, ground straps and fuel line.

(19) Fill cooling system. (Refer to 7 - COOLING - STANDARD PROCEDURE)

(20) Connect battery negative cable.

CAMSHAFT OIL SEAL(S)

REMOVAL

(1) Remove timing belt. (Refer to 9 - ENGINE/VALVE TIMING/TIMING BELT/CHAIN AND SPROCKETS - REMOVAL)

(2) Hold each camshaft sprocket with Special Tool 6847 while removing center bolt (Fig. 12).

(3) Remove camshaft sprockets.

(4) Remove exhaust camshaft target ring.

(5) Remove exhaust camshaft sensor.

CAUTION: Inspect sensor and target ring for excessive wear. Clean sensor face and install new spacer pad.

(6) Remove rear timing belt cover. (Refer to 9 - ENGINE/VALVE TIMING/TIMING BELT / CHAIN COVER(S) - REMOVAL)

(7) Remove camshaft seal using Special Tool C-4679-A (Fig. 13).

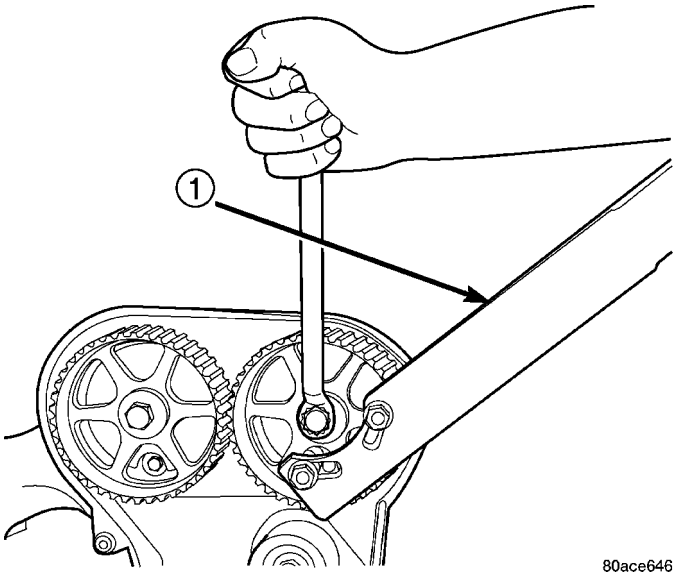

Fig. 12 Camshaft Sprocket - Removal/Installation

1 - SPECIAL TOOL 6847

CAUTION: Do not nick shaft seal surface or seal bore.

INSTALLATION

NOTE: Clean and inspect sensor and target ring for excessive wear. Clean sensor face and always install a new spacer pad.

(1) Shaft seal surface must be free of varnish, dirt or nicks. Polish with 400 grit paper if necessary.

(2) Install camshaft seals into cylinder head using Special Tool MD-998306 until flush with head (Fig. 14).

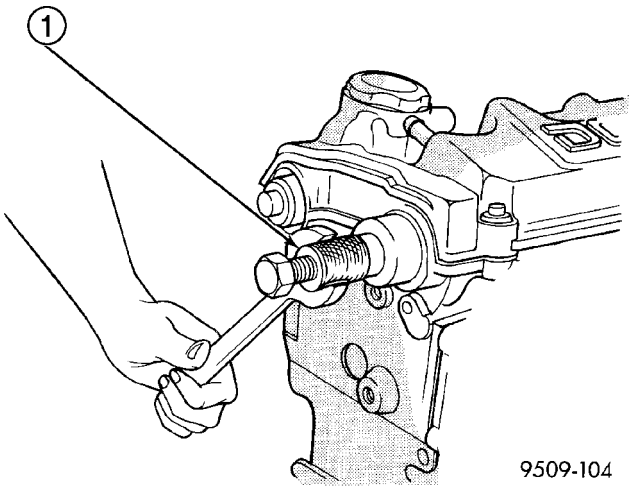

Fig. 13 Camshaft Oil Seal - Removal With C-4679-A

1 - SPECIAL TOOL C-4679

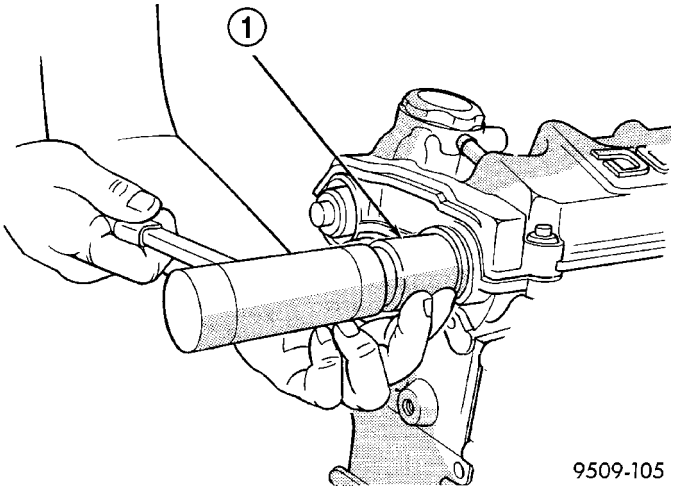

Fig. 14 Camshaft Seal - Installation

1 - SPECIAL TOOL MD 998306

(3) Install timing belt rear cover. (Refer to 9 - ENGINE/VALVE TIMING/TIMING BELT / CHAIN COVER(S) - INSTALLATION)

NOTE: Target ring tab should provide positive snap-on fit on the camshaft.

(4) Install exhaust camshaft target ring with the word **FRONT** facing forward.

(5) Install exhaust camshaft sensor.

(6) Install camshaft sprockets. Hold each sprocket with Special Tool 6847 and tighten center bolt to 101 N·m (75 ft. lbs.).

(7) Install timing belt and front covers. (Refer to 9 - ENGINE/VALVE TIMING/TIMING BELT/CHAIN AND SPROCKETS - INSTALLATION) (Refer to 9 - ENGINE/VALVE TIMING/TIMING BELT / CHAIN COVER(S) - INSTALLATION)

CAMSHAFT(S)

DESCRIPTION

Both nodular iron camshafts have six bearing journal surfaces and two cam lobes per cylinder (Fig. 15). Flanges at the rear journals control camshaft end play. Provision for a cam position sensor is located on the exhaust camshaft on the front of the cylinder head. A hydrodynamic oil seal is used for oil control at the front of the camshaft.

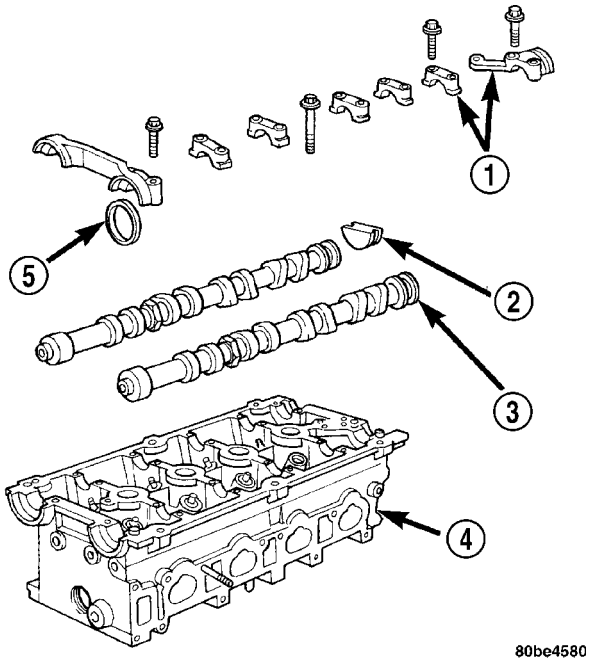

Fig. 15 Camshafts

1 - CAMSHAFT BEARING CAPS
2 - PLUG
3 - CAMSHAFT
4 - CYLINDER HEAD
5 - CAMSHAFT OIL SEAL

OPERATION

The camshaft is driven by the crankshaft via drive sprockets and belt. The camshaft has precisely machined lobes to provide accurate valve timing and duration.

STANDARD PROCEDURE - CAMSHAFT END-PLAY

(1) Oil camshaft journals and install camshaft **WITHOUT** cam follower assemblies. Install rear cam caps and tighten screws to specified torque.

(2) Using a suitable tool, move camshaft as far rearward as it will go.

(3) Zero dial indicator (Fig. 16).

(4) Move camshaft as far forward as it will go.

(5) Record reading on dial indicator. For end play specification, (Refer to 9 - ENGINE - SPECIFICATIONS).

(6) If end play is excessive, check cylinder head and camshaft for wear; replace as necessary.

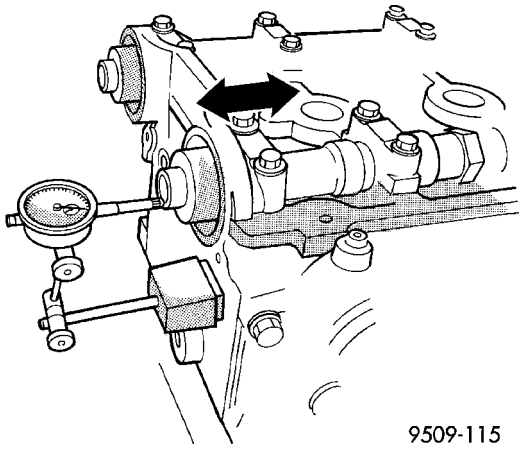

Fig. 16 Camshaft End Play - Typical

REMOVAL

(1) Remove cylinder head cover. (Refer to 9 - ENGINE/CYLINDER HEAD/CYLINDER HEAD COVER(S) - REMOVAL)

(2) Remove camshaft position sensor and camshaft target magnet. (Refer to 8 - ELECTRICAL/IGNITION CONTROL/CAMSHAFT POSITION SENSOR - REMOVAL)

(3) Remove timing belt. (Refer to 9 - ENGINE/VALVE TIMING/TIMING BELT/CHAIN AND SPROCKETS - REMOVAL)

(4) Remove camshaft sprockets and timing belt rear cover. (Refer to 9 - ENGINE/VALVE TIMING/TIMING BELT / CHAIN COVER(S) - REMOVAL)

(5) Bearing caps are identified for location. Remove the outside bearing caps first (Fig. 17).

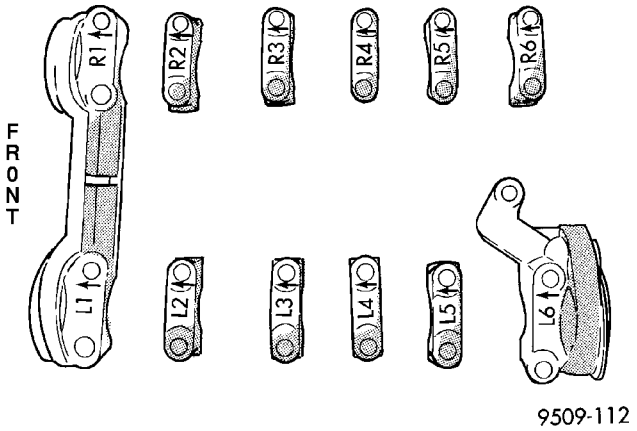

Fig. 17 Camshaft Bearing Cap Identification

CAMSHAFT(S) (Continued)

(6) Loosen the camshaft bearing cap attaching fasteners in sequence shown (Fig. 18) one camshaft at a time.

CAUTION: Camshafts are not interchangeable. The intake cam number 6 thrust bearing face spacing is wider.

(7) Identify the camshafts before removing from the head. The camshafts are not interchangeable.
(8) Remove camshafts from cylinder head.

NOTE: If removing rocker arms, identify for reinstallation in the original position.

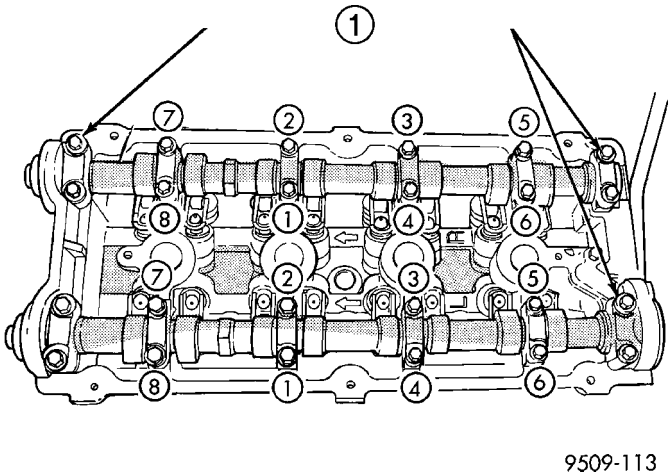

Fig. 18 Camshaft Bearing Cap - Removal

1 - REMOVE OUTSIDE BEARING CAPS FIRST

CLEANING

Clean camshaft with a suitable solvent.

INSPECTION

(1) Inspect camshaft bearing journals for damage and binding (Fig. 19). If journals are binding, check the cylinder head for damage. Also check cylinder head oil holes for clogging.
(2) Check the cam lobe and bearing surfaces for abnormal wear and damage. Replace camshaft if defective.

NOTE: If camshaft is replaced due to lobe wear or damage, always replace the rocker arms.

(3) Measure the lobe actual wear (unworn area - wear zone = actual wear) (Fig. 19) and replace camshaft if out of limit. Standard value is 0.0254 mm (0.001 in.), wear **limit** is 0.254 mm (0.010 in.).

INSTALLATION

CAUTION: Ensure that NONE of the pistons are at top dead center when installing the camshafts.

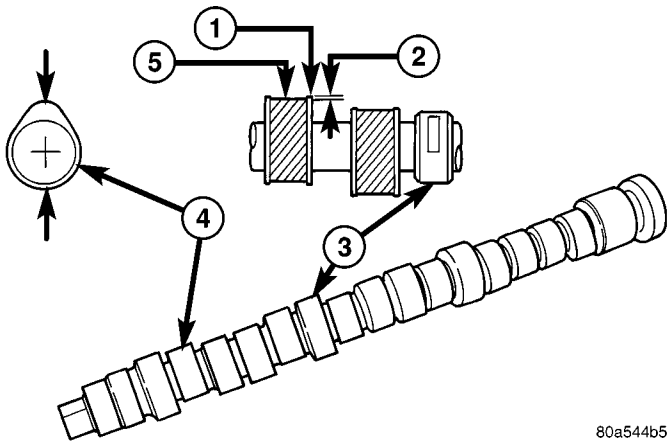

Fig. 19 Checking Camshaft(s) for Wear

1 - UNWORN AREA
2 - ACTUAL WEAR
3 - BEARING JOURNAL
4 - LOBE
5 - WEAR ZONE

(1) Lubricate all camshaft bearing journals, rocker arms and camshaft lobes.
(2) Install all rocker arms in original positions, if reused.
(3) Position camshafts on cylinder head bearing journals. Install right and left camshaft bearing caps No. 2 – 5 and right No. 6. Tighten M6 fasteners to 12 N·m (105 in. lbs.) in sequence shown in (Fig. 20).
(4) Apply Mopar® Gasket Maker to No. 1 and No. 6 bearing caps (Fig. 21). Install bearing caps and tighten M8 fasteners to 28 N·m (250 in. lbs.).

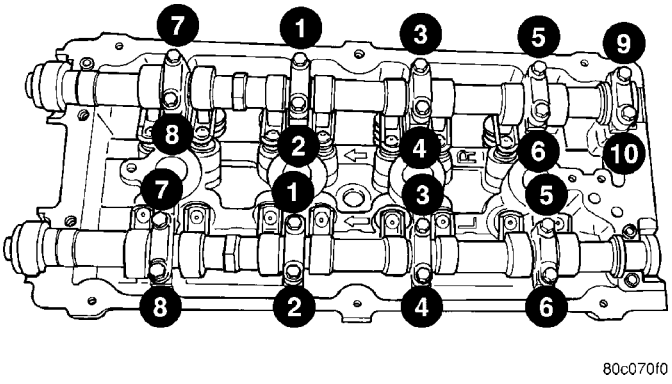

Fig. 20 Camshaft Bearing Cap Tightening Sequence

NOTE: Bearing end caps must be installed before seals can be installed.

(5) Install camshaft oil seals. (Refer to 9 - ENGINE/CYLINDER HEAD/CAMSHAFT OIL SEAL(S) - INSTALLATION)

CAMSHAFT(S) (Continued)

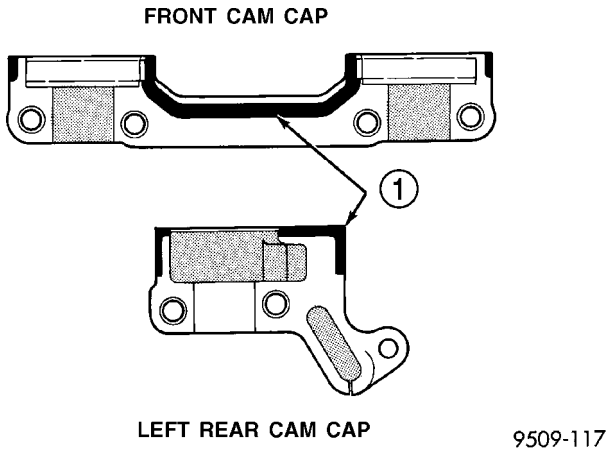

Fig. 21 Camshaft Bearing Cap Sealing

1 - 1.5 mm (.060 in.) DIAMETER BEAD OF MOPAR GASKET MAKER

(6) Install camshaft target magnet and camshaft position sensor.

(7) Install cylinder head cover. (Refer to 9 - ENGINE/CYLINDER HEAD/CYLINDER HEAD COVER(S) - INSTALLATION)

(8) Install timing belt rear cover and camshaft sprocket. (Refer to 9 - ENGINE/VALVE TIMING/ TIMING BELT / CHAIN COVER(S) - INSTALLATION)

(9) Install timing belt. (Refer to 9 - ENGINE/ VALVE TIMING/TIMING BELT/CHAIN AND SPROCKETS - INSTALLATION)

CYLINDER HEAD COVER

REMOVAL

(1) Remove intake manifold. (Refer to 9 - ENGINE/MANIFOLDS/INTAKE MANIFOLD - REMOVAL)

(2) Remove ignition coil and spark plug wires.

(3) Disconnect PCV and make-up air hoses from cylinder head cover.

(4) Remove cylinder head cover bolts.

(5) Remove cylinder head cover from cylinder head.

CLEANING

Clean cylinder head and cover mating surfaces using a suitable solvent.

INSPECTION

Inspect cover rails for flatness.

INSTALLATION

NOTE: Replace spark plug well seals and bolt assemblies when installing a new cylinder head cover gasket.

(1) Install new cylinder head cover gaskets and spark plug well seals (Fig. 22).

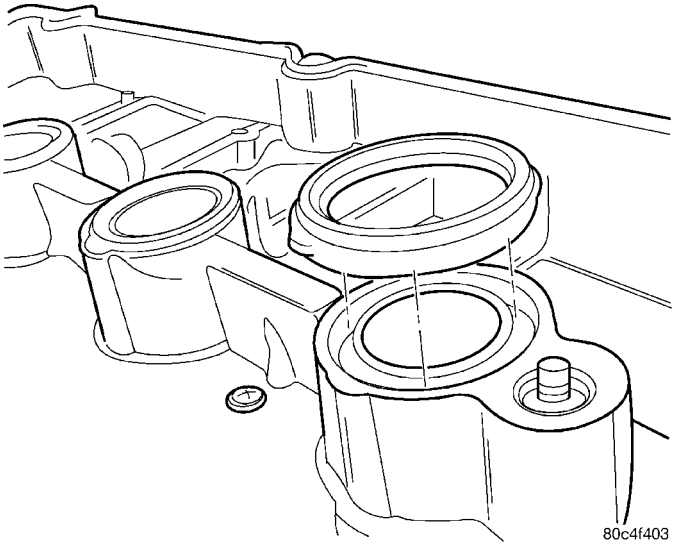

Fig. 22 Spark Plug Well Seals

(2) Replace cylinder head cover bolt assemblies (Fig. 23).

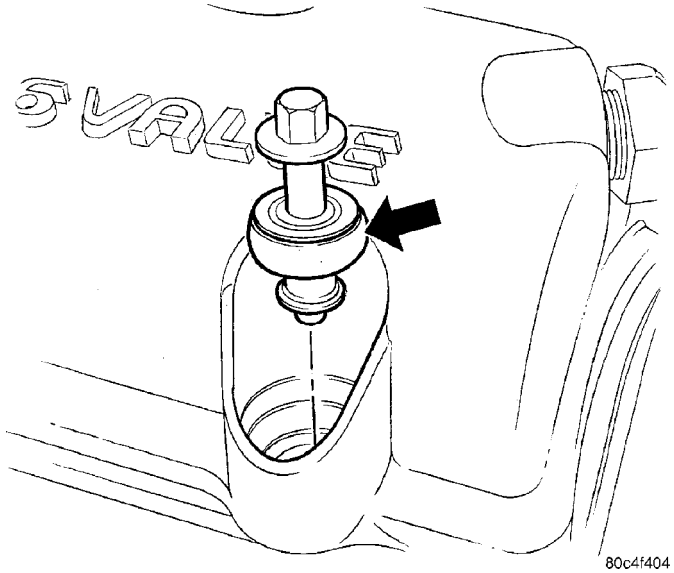

Fig. 23 Cylinder Head Cover Bolt Assembly

CYLINDER HEAD COVER (Continued)

CAUTION: Do not allow oil or solvents to contact the timing belt as they can deteriorate the rubber and cause tooth skipping.

(3) Apply Mopar® Engine RTV GEN II at the camshaft cap corners and at the top edges of the 1/2 round seal (Fig. 24).

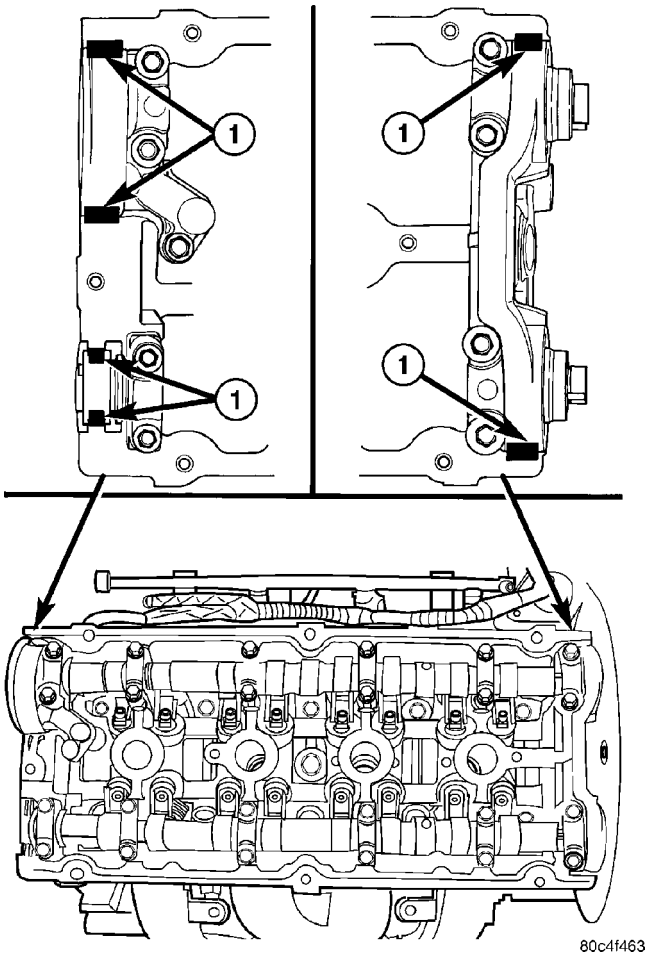

Fig. 24 Sealer Locations - Typical

1 – SEALER LOCATION

(4) Install cylinder head cover assembly to cylinder head. Install all bolts, ensuring the two (2) bolts containing the sealing washer are located in the center locations of cover. Tighten bolts in sequence shown in (Fig. 25). Using a 3 step torque method as follows:

(a) Tighten all bolts to 4.5 N·m (40 in. lbs.).

(b) Tighten all bolts to 9.0 N·m (80 in. lbs.).

(c) Tighten all bolts to 12 N·m (105 in. lbs.).

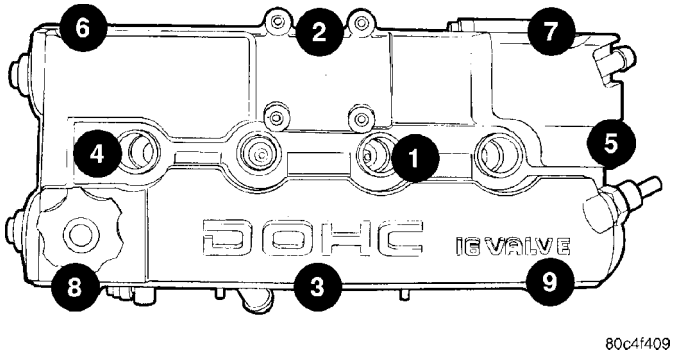

Fig. 25 Cylinder Head Cover Tightening Sequence (Typical Cover Shown)

(5) Install ignition coil and spark plug wires. Tighten fasteners to 12 N·m (105 in. lbs.).

(6) If the PCV valve was removed, apply Mopar® Thread Sealant with Teflon to threads and install valve to cylinder head cover. Tighten PCV valve to 8 N·m (70 in. lbs.).

(7) Connect PCV and make-up air hoses to cylinder head cover.

(8) Install upper intake manifold. (Refer to 9 - ENGINE/MANIFOLDS/INTAKE MANIFOLD - INSTALLATION)

INTAKE/EXHAUST VALVES & SEATS

DESCRIPTION

The four valves per cylinder are opened by using roller rocker arms which pivot on hydraulic lash adjusters. The valves have chrome plated valve stems. Viton rubber valve stem seals are integral with the spring seats. They have chrome plated stems to prevent scuffing. Viton rubber valve stem seals are integral with the spring seats. The valves, spring retainers,and locks, are the 3 - bead lock design

CLEANING

(1) Clean all valves thoroughly and discard burned, warped and cracked valves.

VALVE SPRINGS

REMOVAL

REMOVAL - CYLINDER HEAD ON

(1) Remove camshafts.

(2) Rotate crankshaft until piston is at TDC on compression.

(3) With air hose attached to adapter tool installed in spark plug hole, apply 90-120 psi air pressure.

(4) Using Special Tool MD-998772-A with adapter 6779 (Fig. 26), compress valve springs and remove valve locks.

(5) Remove valve spring(s).

(6) Remove valve stem seal(s) by a using valve stem seal tool (Fig. 28).

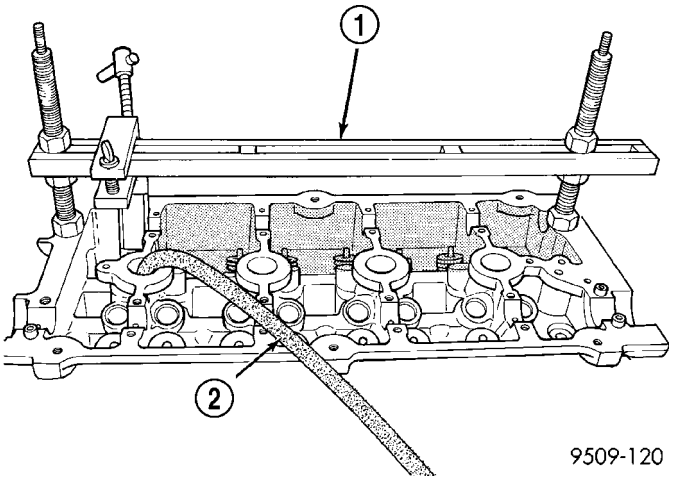

Fig. 26 Valve Spring - Removal/Installation

1 - VALVE SPRING COMPRESSOR MD 998772A
2 - AIR HOSE

REMOVAL - CYLINDER HEAD OFF

(1) With cylinder head removed from cylinder block, compress valve springs using a universal valve spring compressor.

(2) Remove valve retaining locks, valve spring retainers, valve stem seals and valve springs.

(3) Before removing valves, **remove any burrs from valve stem lock grooves to prevent damage to the valve guides.** Identify valves, locks and retainers to insure installation in original location.

(4) Inspect the valves. (Refer to 9 - ENGINE/CYLINDER HEAD/VALVE SPRINGS - INSPECTION)

INSPECTION

(1) Whenever valves have been removed for inspection, reconditioning or replacement, valve springs should be tested for correct tension. Discard the springs that do not meet specifications. The following specifications apply to both intake and exhaust valves springs:

- Valve Closed Nominal Tension - 75 lbs. @ 38.0 mm (1.50 in.)
- Valve Open Nominal Tension - 134 lbs. @ 29.75 mm (1.17 in.)

(2) Inspect each valve spring for squareness with a steel square and surface plate, test springs from both ends. If the spring is more than 1.5 mm (1/16 inch) out of square, install a new spring.

INSTALLATION

INSTALLATION - CYLINDER HEAD ON

(1) Install valve seal/valve spring seat assembly (Fig. 27). Push the assembly down to seat it onto the valve guide.

(2) Install valve spring and retainer, use Special Tool MD-998772-A with adapter 6779 to compress valve springs only enough to install locks. Correct alignment of tool is necessary to avoid nicking valve stems.

(3) Remove air hose and install spark plugs.

(4) Install camshafts and cylinder head cover .

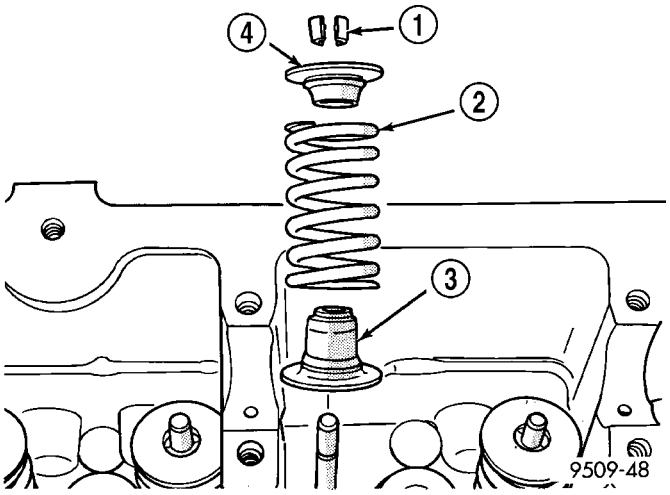

Fig. 27 Valve Stem Seal/Valve Spring Seat - Typical

1 - 3-GROOVE -VALVE RETAINING LOCKS
2 - VALVE SPRING
3 - VALVE SEAL AND VALVE SPRING SEAT ASSEMBLY
4 - VALVE SPRING RETAINER

VALVE SPRINGS (Continued)

INSTALLATION - CYLINDER HEAD OFF

(1) Coat valve stems with clean engine oil and insert in cylinder head.

(2) Install new valve stem seals on all valves using a valve stem seal tool (Fig. 28). The valve stem seals should be pushed firmly and squarely over valve guide.

CAUTION: When oversize valves are used, the corresponding oversize valve seal must also be used. Excessive guide wear may result if oversize seals are not used with oversize valves.

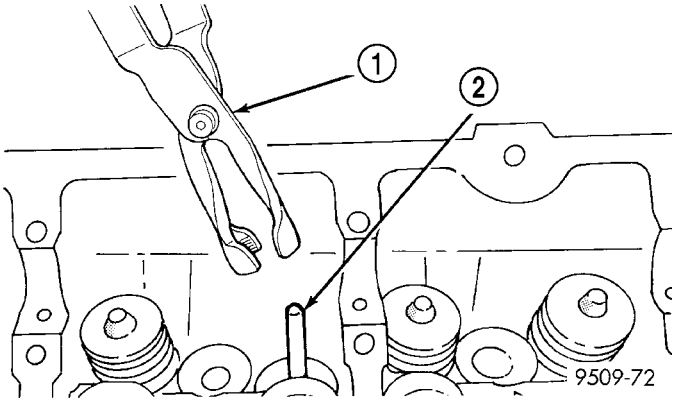

Fig. 28 Valve Stem Oil Seal Tool

1 - VALVE SEAL TOOL
2 - VALVE STEM

(3) Install valve springs and retainers. Compress valve springs only enough to install locks, taking care not to misalign the direction of compression. Nicked valve stems may result from misalignment of the valve spring compressor.

CAUTION: When depressing the valve spring retainers with valve spring compressor the locks can become dislocated. Ensure both locks are in the correct location after removing tool.

(4) Check the valve spring installed height B after refacing the valve and seat (Fig. 29). Make sure measurements are taken from top of spring seat to the bottom surface of spring retainer. If height is greater than 38.75 mm (1.525 in.), install a 0.762 mm (0.030 in.) spacer under the valve spring seat to bring spring height back within specification.

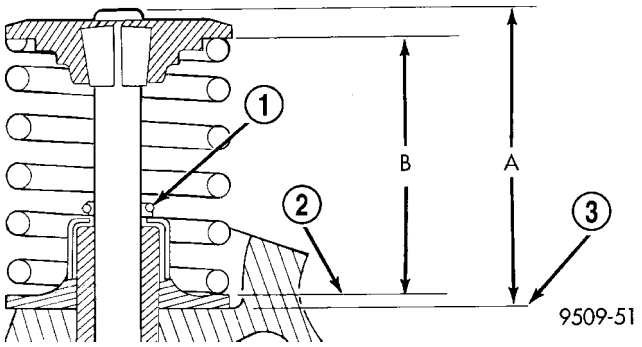

Fig. 29 Checking Spring Installed Height and Valve Tip Height Dimensions

1 - GARTER SPRING
2 - VALVE SPRING SEAT
3 - CYLINDER HEAD SURFACE

HYDRAULIC LIFTERS

DIAGNOSIS AND TESTING

LASH ADJUSTER (TAPPET) NOISE DIAGNOSIS

A tappet-like noise may be produced from several items. Check the following items.

(1) Engine oil level too high or too low. This may cause aerated oil to enter the adjusters and cause them to be spongy.

(2) Insufficient running time after rebuilding cylinder head. Low speed running up to 1 hour may be required.

(3) During this time, turn engine off and let set for a few minutes before restarting. Repeat this several times after engine has reached normal operating temperature.

(4) Low oil pressure.

(5) The oil restrictor (integral to the head gasket) in the vertical oil passage to the cylinder head is plugged with debris.

(6) Air ingested into oil due to broken or cracked oil pump pick up.

(7) Worn valve guides.

(8) Rocker arm ears contacting valve spring retainer.

(9) Rocker arm loose, adjuster stuck or at maximum extension and still leaves lash in the system.

(10) Faulty lash adjuster.

a. Check lash adjusters for sponginess while installed in cylinder head. Depress part of rocker arm over adjuster. Normal adjusters should feel very firm. Spongy adjusters can be bottomed out easily.

b. Remove suspected lash adjusters, and replace as necessary.

HYDRAULIC LIFTERS (Continued)

REMOVAL

NOTE: This procedure is for in-vehicle service with camshafts installed.

(1) Remove cylinder head cover. (Refer to 9 - ENGINE/CYLINDER HEAD/CYLINDER HEAD COVER(S) - REMOVAL)
(2) Remove the camshafts (Refer to 9 - ENGINE/CYLINDER HEAD/CAMSHAFT(S) - REMOVAL).
(3) Remove rocker arm. (Refer to 9 - ENGINE/CYLINDER HEAD/ROCKER ARMS - REMOVAL)
(4) Remove hydraulic lifter (Fig. 30).
(5) Repeat removal procedure for each hydraulic lifter.
(6) If reusing, mark each hydraulic lifter for reassembly in original position. Lifters are serviced as an assembly.

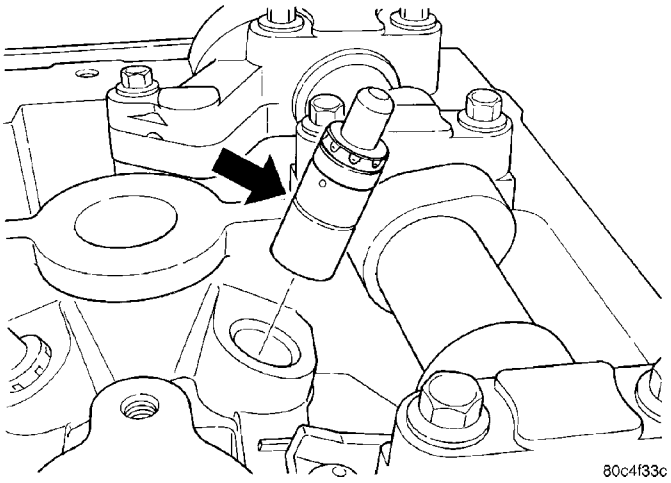

Fig. 30 Hydraulic Lash Adjuster

INSTALLATION

(1) Install hydraulic lifter (Fig. 30). Ensure the lifters are at least partially full of engine oil. This is indicated by little or no plunger travel when the lifter is depressed.
(2) Install rocker arm. (Refer to 9 - ENGINE/CYLINDER HEAD/ROCKER ARMS - INSTALLATION)
(3) Repeat installation procedure for each hydraulic lifter.
(4) Install camshafts (Refer to 9 - ENGINE/CYLINDER HEAD/CAMSHAFT(S) - INSTALLATION).
(5) Install cylinder head cover. (Refer to 9 - ENGINE/CYLINDER HEAD/CYLINDER HEAD COVER(S) - INSTALLATION)

ROCKER ARMS

REMOVAL

NOTE: This procedure is for in-vehicle service with camshafts installed.

(1) Remove cylinder head cover. (Refer to 9 - ENGINE/CYLINDER HEAD/CYLINDER HEAD COVER(S) - REMOVAL)
(2) Remove fuel rail. (Refer to 14 - FUEL SYSTEM/FUEL DELIVERY/FUEL RAIL - REMOVAL)
(3) Remove spark plugs.
(4) Rotate engine until the camshaft lobe, on the follower being removed, is position on its base circle (heel). Also, the piston should be a minimum of 6.3 mm (0.25 in) below TDC position.

CAUTION: If cam follower assemblies are to be reused, always mark position for reassembly in their original positions.

(5) Using Special Tools 8215 and 8436 slowly depress valve assembly until rocker arm can be removed (Fig. 31).

NOTE: It may be necessary to remove additional brackets or components to allow clearance for tool handle movement.

(6) Repeat removal procedure for each rocker arm.

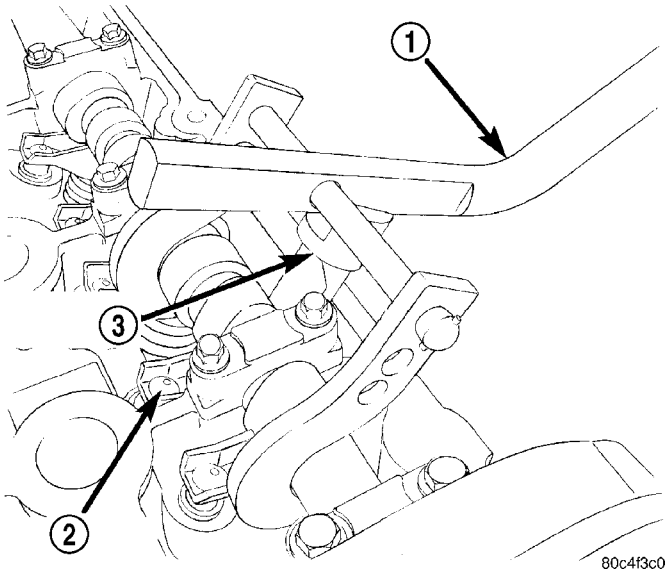

Fig. 31 Rocker Arm - Removal/Installation

1 - SPECIAL TOOL 8215
2 - ROCKER ARM
3 - SPECIAL TOOL 8436

ROCKER ARMS (Continued)

INSPECTION

Inspect the rocker arm for wear or damage (Fig. 32). Replace as necessary.

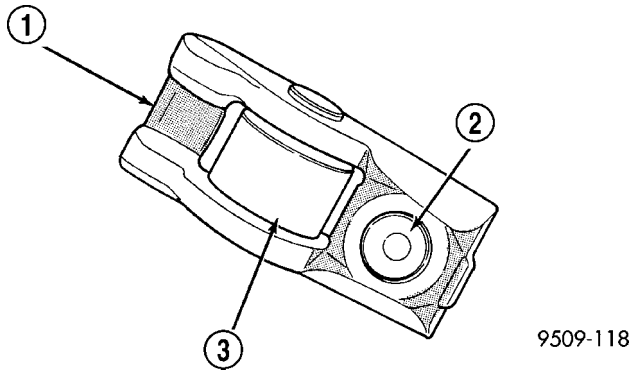

Fig. 32 Rocker Arm - Typical

1 - TIP
2 - LASH ADJUSTER POCKET
3 - ROLLER

INSTALLATION

(1) Lubricate rocker arm with clean engine oil.

(2) Using Special Tools 8215 and 8436 slowly depress valve assembly until rocker arm can be installed on the hydraulic lifter and valve stem.

(3) Repeat installation procedure for each rocker arm.

(4) Install spark plugs.

(5) Install fuel rail. (Refer to 14 - FUEL SYSTEM/ FUEL DELIVERY/FUEL RAIL - INSTALLATION)

(6) Install cylinder head cover. (Refer to 9 - ENGINE/CYLINDER HEAD/CYLINDER HEAD COVER(S) - INSTALLATION)

ENGINE BLOCK

DESCRIPTION

The cast iron cylinder block is a two-piece assembly, consisting of the cylinder block and bedplate (Fig. 33). The bedplate incorporates the main bearing caps and bolts to the cylinder block. This design offers a much stronger lower end and increased cylinder block rigidity. The rear oil seal retainer is integral with the block. The bedplate and block are serviced as an assembly.

STANDARD PROCEDURE

STANDARD PROCEDURE - PISTON TO CYLINDER BORE FITTING

Piston and cylinder wall must be clean and dry. Piston diameter should be measured 90 degrees to

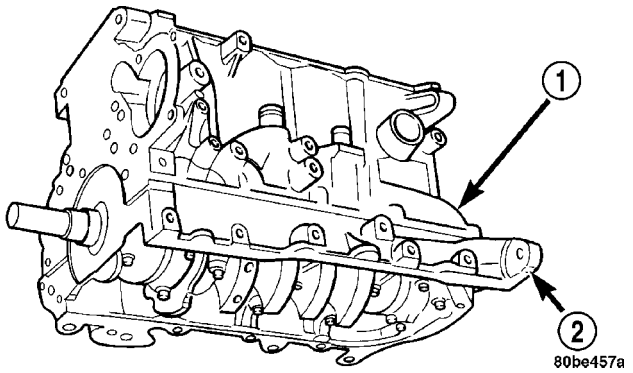

Fig. 33 2.4L Cylinder Block and Bedplate - Typical

1 - CYLINDER BLOCK
2 - BEDPLATE

piston pin about 14 mm (9/16 inch.) from the bottom of the skirt as shown in (Fig. 35). Cylinder bores should be measured halfway down the cylinder bore and transverse to the engine crankshaft center line shown in (Fig. 34). Refer to for Engine Specifications (Refer to 9 - ENGINE - SPECIFICATIONS). Correct piston to bore clearance must be established in order to assure quiet and economical operation.

NOTE: Pistons and cylinder bores should be measured at normal room temperature, 21°C (70°F).

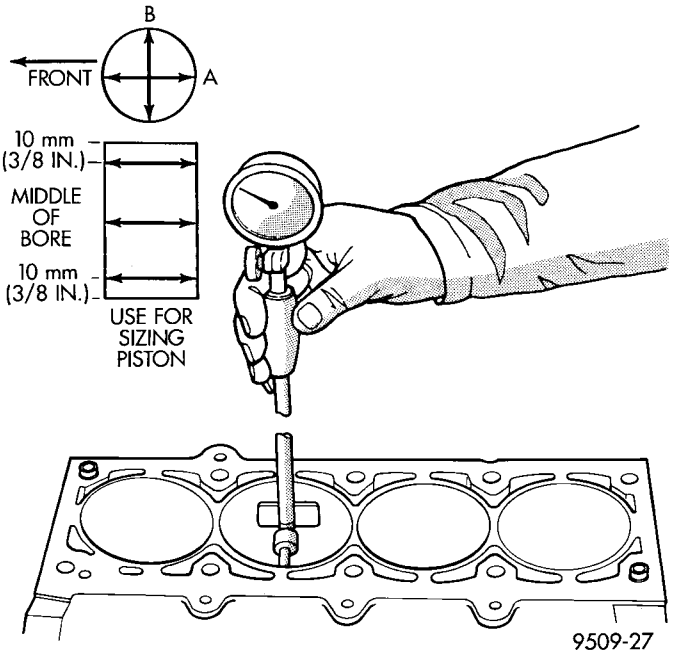

Fig. 34 Checking Cylinder Bore -Typical

ENGINE BLOCK (Continued)

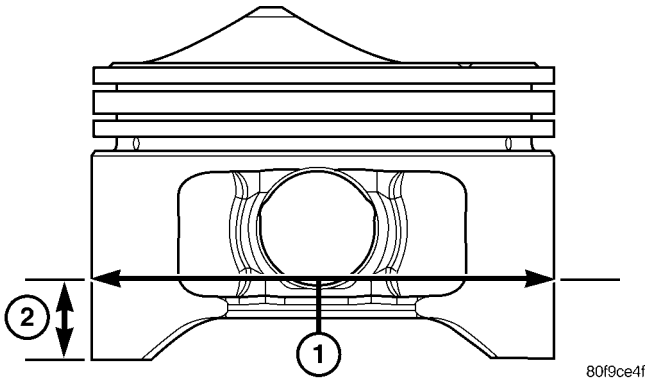

Fig. 35 Piston Measurement - Typical

1 - PISTON DIAMETER
2 - 14 mm (0.551 in.)

CYLINDER BORE HONING

(1) Used carefully, the cylinder bore resizing hone, recommended tool C-823 or equivalent, equipped with 220 grit stones, is the best tool for this honing procedure. In addition to deglazing, it will reduce taper and out-of-round as well as removing light scuffing, scoring or scratches. Usually a few strokes will clean up a bore and maintain the required limits.

(2) Deglazing of the cylinder walls may be done using a cylinder surfacing hone, recommended tool C-3501 or equivalent, equipped with 280 grit stones, if the cylinder bore is straight and round. 20–60 strokes depending on the bore condition, will be sufficient to provide a satisfactory surface. Use a light honing oil. **Do not use engine or transmission oil, mineral spirits or kerosene.** Inspect cylinder walls after each 20 strokes.

(3) Honing should be done by moving the hone up and down fast enough to get a cross-hatch pattern. When hone marks **intersect** at 40-60 degrees, the cross hatch angle is most satisfactory for proper seating of rings (Fig. 36).

(4) A controlled hone motor speed between 200–300 RPM is necessary to obtain the proper cross-hatch angle. The number of up and down strokes per minute can be regulated to get the desired 40–60 degree angle. Faster up and down strokes increase the cross-hatch angle.

(5) After honing, it is necessary that the block be cleaned again to remove all traces of abrasive.

CAUTION: Ensure all abrasives are removed from engine parts after honing. It is recommended that a solution of soap and hot water be used with a brush and the parts then thoroughly dried. The bore can be considered clean when it can be wiped clean with a white cloth and cloth remains clean. Oil the bores after cleaning to prevent rusting.

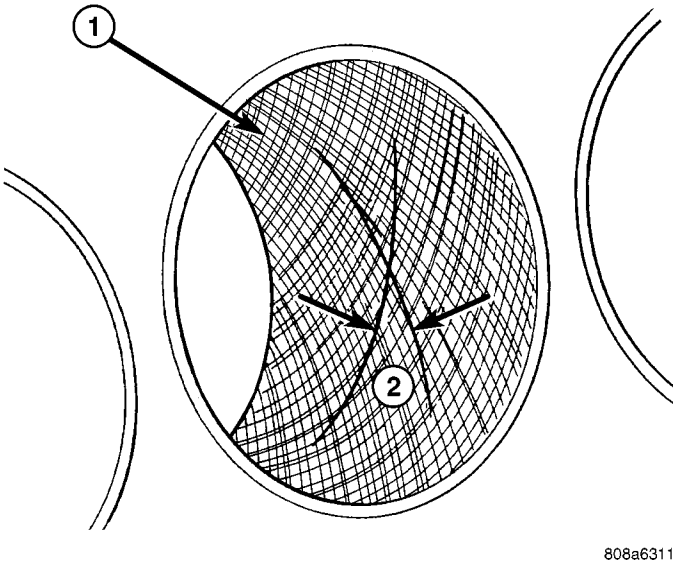

Fig. 36 Cylinder Bore Cross-Hatch Pattern

1 - CROSS-HATCH PATTERN
2 - 40°–60°

CLEANING

Clean cylinder block thoroughly using a suitable cleaning solvent.

INSPECTION

ENGINE BLOCK

(1) Clean cylinder block thoroughly and check all core hole plugs for evidence of leaking.

(2) If new core plugs are to be installed, (Refer to 9 - ENGINE - STANDARD PROCEDURE - ENGINE CORE AND OIL GALLERY PLUGS).

(3) Examine block and cylinder bores for cracks or fractures.

(4) Check block deck surfaces for flatness. Deck surface must be within service limit of 0.1 mm (0.004 in.).

ENGINE BLOCK (Continued)

CYLINDER BORE

NOTE: The cylinder bores should be measured at normal room temperature, 21°C (70°F).

The cylinder walls should be checked for out-of-round and taper with Tool C119 or equivalent (Fig. 37) (Refer to 9 - ENGINE - SPECIFICATIONS). If the cylinder walls are badly scuffed or scored, the cylinder block should be replaced, and new pistons and rings fitted.

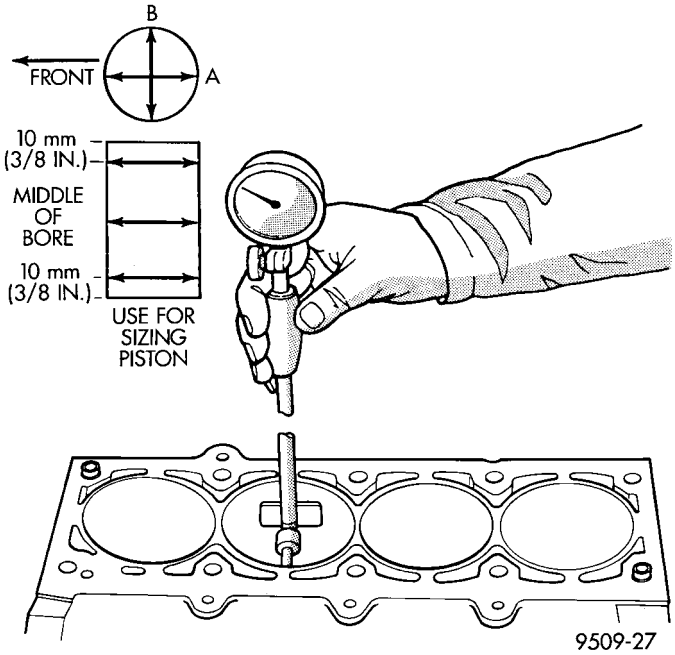

Fig. 37 Checking Cylinder Bore Size

Measure the cylinder bore at three levels in directions A and B (Fig. 37). Top measurement should be 10 mm (3/8 in.) down and bottom measurement should be 10 mm (3/8 in.) up from bottom of bore. (Refer to 9 - ENGINE - SPECIFICATIONS).

CONNECTING ROD BEARINGS

STANDARD PROCEDURE

CONNECTING ROD - FITTING

(1) For measuring connecting rod bearing clearance procedure and use of Plastigage (Refer to 9 - ENGINE - STANDARD PROCEDURE). For bearing clearance refer to Engine Specifications. (Refer to 9 - ENGINE - SPECIFICATIONS)

NOTE: The rod bearing bolts should not be reused.

(2) Before installing the **NEW** bolts the threads should be oiled with clean engine oil.

(3) Install each bolt finger tight then alternately torque each bolt to assemble the cap properly.

(4) Tighten the bolts to 27 N·m PLUS 1/4 turn (20 ft. lbs. PLUS 1/4 turn) **Do not use a torque wrench for last step.**

(5) Using a feeler gauge, check connecting rod side clearance (Fig. 38). Refer to clearance specifications (Refer to 9 - ENGINE - SPECIFICATIONS).

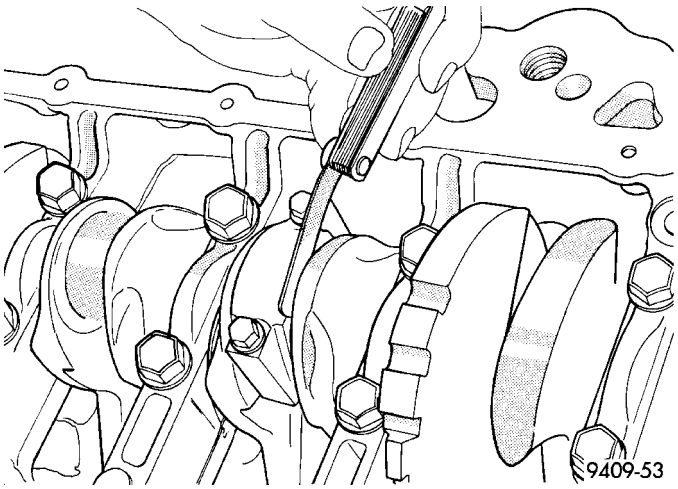

Fig. 38 Connecting Rod Side Clearance

CRANKSHAFT

DESCRIPTION

The crankshaft is made of nodular cast iron and includes five main bearing journals and four connecting rod journals (Fig. 39). The number three journal is the location for the thrust bearing. The mains and connecting rod journals have undercut fillet radiuses that are rolled for added strength. To optimize bearing loading, eight counterweights are used.

OPERATION

The crankshaft transfers force generated by combustion within the cylinder to the flywheel or flexplate.

STANDARD PROCEDURE - CRANKSHAFT END PLAY

(1) Using Dial Indicator C-3339 and Mounting Post L-4438, attach to front of engine, locating probe perpendicular on nose of crankshaft (Fig. 40).

(2) Move crankshaft all the way to the rear of its travel.

(3) Zero the dial indicator.

(4) Move crankshaft all the way to the front and read the dial indicator. Refer to Engine Specifications.

CRANKSHAFT (Continued)

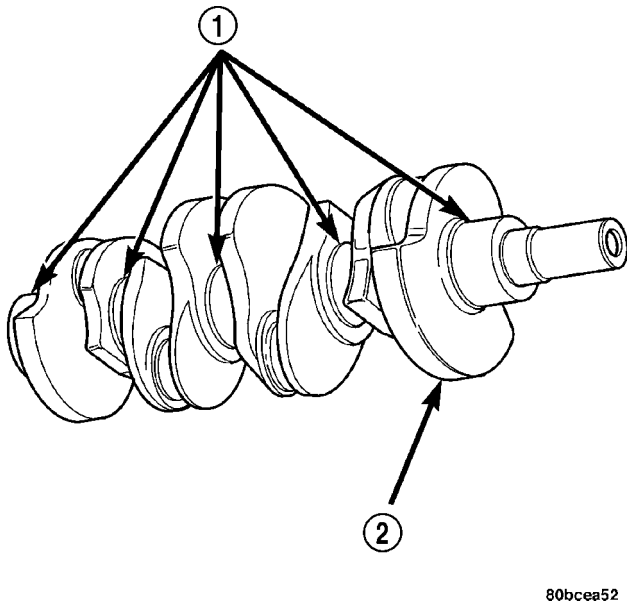

Fig. 39 Crankshaft - Typical

1 - MAIN BEARING JOURNALS
2 - COUNTER BALANCE WEIGHTS

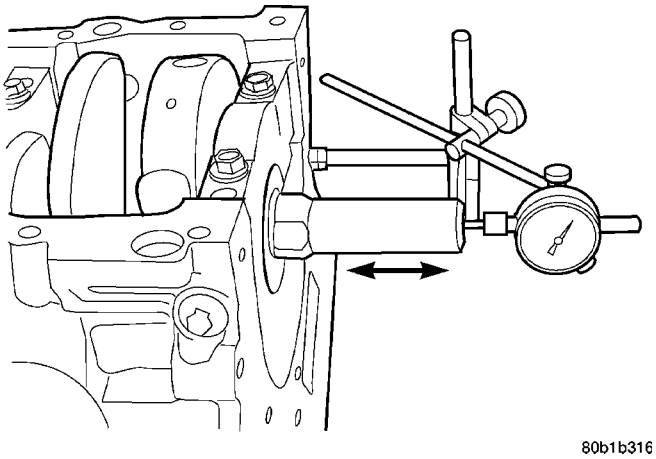

Fig. 40 CHECKING CRANKSHAFT END PLAY

REMOVAL

NOTE: Crankshaft can not be removed when engine is in vehicle.

(1) Remove engine assembly from vehicle. (Refer to 9 - ENGINE - REMOVAL)
(2) Remove flex plate and crankshaft rear oil seal.
(3) Mount engine on a repair stand.
(4) Drain engine oil and remove oil filter.
(5) Remove the oil pan. (Refer to 9 - ENGINE/LUBRICATION/OIL PAN - REMOVAL)
(6) Remove the timing belt covers. (Refer to 9 - ENGINE/VALVE TIMING/TIMING BELT / CHAIN COVER(S) - REMOVAL)
(7) Remove the timing belt. (Refer to 9 - ENGINE/VALVE TIMING/TIMING BELT/CHAIN AND SPROCKETS - REMOVAL)
(8) Remove the oil pump. (Refer to 9 - ENGINE/LUBRICATION/OIL PUMP - REMOVAL)
(9) Remove balance shafts and housing assembly. (Refer to 9 - ENGINE/VALVE TIMING/BALANCE SHAFT - REMOVAL)
(10) Using a permanent ink or paint marker, identify cylinder number on each connecting rod cap (Fig. 41).

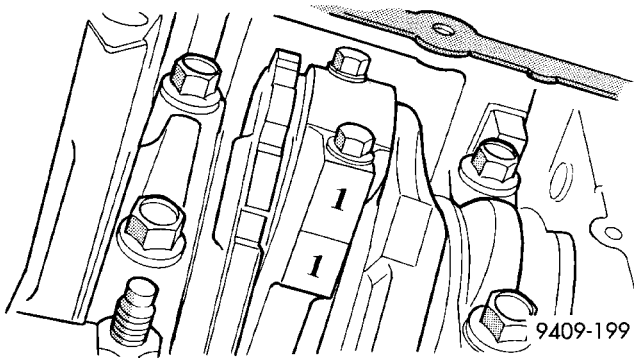

Fig. 41 Identify Connecting Rod to Cylinder-Typical

CAUTION: DO NOT use a number stamp or a punch to mark connecting rods. Damage to connecting rod could occur.

(11) Remove all connecting rod bolts and caps. Care should be taken not to damage the fracture rod and cap surfaces.

NOTE: Do not reuse connecting rod bolts.

(12) Remove all bedplate bolts from the engine block (Fig. 42).
(13) Using a mallet gently tap the bedplate loose from the engine block dowel pins.

CAUTION: Do not pry up on one side of the bedplate. Damage may occur to cylinder block to bedplate alignment and thrust bearing.

(14) Bedplate should be removed evenly from the cylinder block dowel pins to prevent damage to the dowel pins and thrust bearing.
(15) Lift out crankshaft from cylinder block. Do not damage the main bearings or journals when removing the crankshaft.
(16) Remove the target ring mounting screws and discard.
(17) Remove the target ring from the crankshaft.

CRANKSHAFT (Continued)

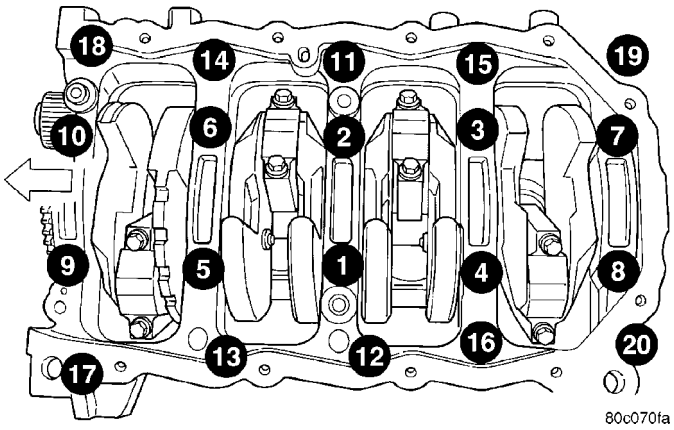

Fig. 42 Bedplate Bolt Tightening Sequence

INSPECTION

The crankshaft journals should be checked for excessive wear, taper and scoring (Fig. 43). Limits of taper or out of round on any crankshaft journals should within specitifications. (Refer to 9 - ENGINE - SPECIFICATIONS) Journal grinding should not exceed 0.305 mm (0.012 in.) under the standard journal diameter. DO NOT grind thrust faces of No. 3 main bearing. DO NOT nick crank pin or bearing fillets. After grinding, remove rough edges from crankshaft oil holes and clean out all passages.

CAUTION: With the nodular cast iron crankshafts, it is important that the final paper or cloth polish be in the same direction as normal rotation in the engine.

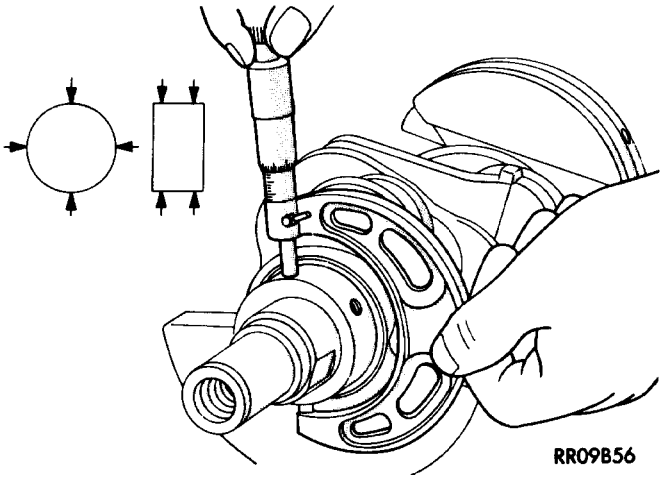

Fig. 43 Crankshaft Journal Measurements

INSTALLATION

(1) Install the main bearing shells with the lubrication groove in the cylinder block (Fig. 44).

(2) Make certain oil holes in block line up with oil hole in bearings and bearing tabs seat in the block tab slots.

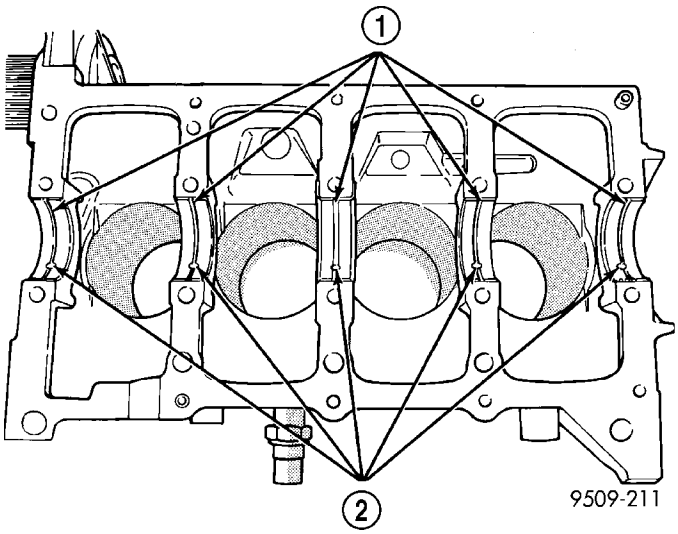

Fig. 44 Installing Main Bearing Upper Shell

1 - LUBRICATION GROOVES
2 - OIL HOLES

CAUTION: Do not get oil on the bedplate mating surface. It will affect the sealer ability to seal the bedplate to cylinder block.

(3) Oil the bearings and journals. Install crankshaft.

CAUTION: Use only the specified anaerobic sealer on the bedplate or damage may occur to the engine.

(4) Apply 1.5 to 2.0 mm (0.059 to 0.078 in.) bead of Mopar® Bed Plate Sealant to cylinder block as shown in (Fig. 45).

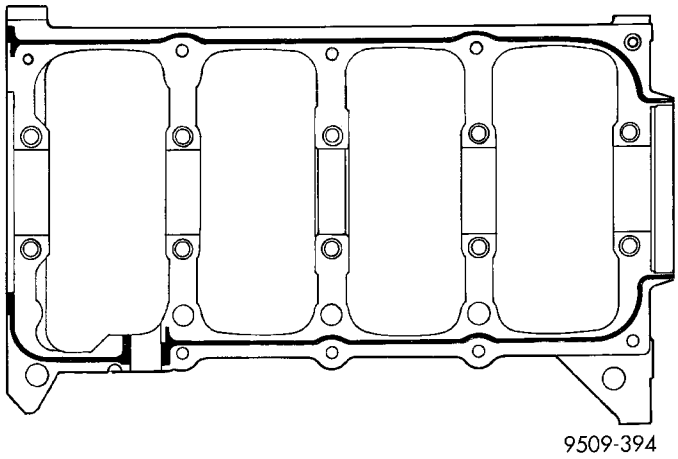

Fig. 45 Bedplate Sealing

CRANKSHAFT (Continued)

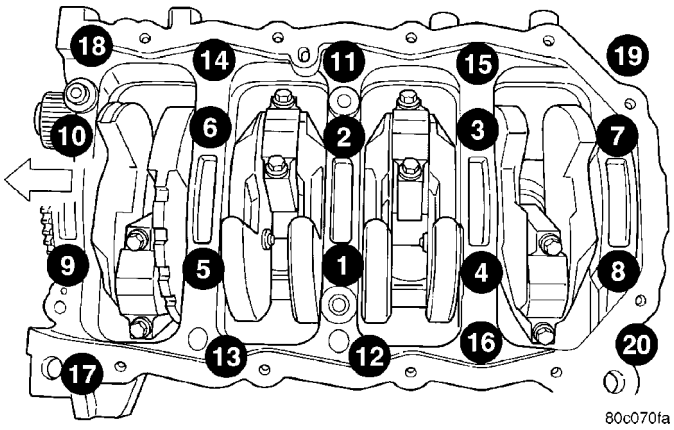

Fig. 46 Bedplate Bolt Torque Sequence

(5) Install lower main bearings into main bearing cap/bedplate. Make certain the bearing tabs are seated into the bedplate slots. Install the main bearing/bedplate into engine block.

(6) Before installing the bolts the threads should be oiled with clean engine oil, wipe off any excess oil.

(7) Install main bearing bedplate to engine block bolts 11, 17, and 20 finger tight. Tighten these bolts down together until the bedplate contacts the cylinder block.

(8) To ensure correct thrust bearing alignment, perform the following steps:

- Step 1: Rotate crankshaft until number 4 piston is at TDC.
- Step 2: Move crankshaft rearward to limits of travel.
- Step 3: Then, move crankshaft forward to limits of travel.
- Step 4: Wedge an appropriate tool between the rear of the cylinder block **(NOT BED PLATE)** and the rear crankshaft counterweight. This will hold the crankshaft in it's furthest forward position.
- Step 5: Install and tighten bolts (1–10) in sequence shown in (Fig. 46) to 41 N·m (30 ft. lbs.).
- Step 6: Remove wedge tool used to hold crankshaft.

(9) Tighten bolts (1–10) again to 41 N·m (30 ft. lbs.) +1/4 turn in sequence shown in (Fig. 46).

(10) Install main bearing bedplate to engine block bolts (11–20), and torque each bolt to 28 N·m (20 ft. lbs.) in sequence shown in (Fig. 46).

(11) After the main bearing bedplate is installed, check the crankshaft turning torque. The turning torque should not exceed 5.6 N·m (50 in. lbs.).

(12) Install connecting rod bearings and caps. **Do Not Reuse Connecting Rod Bolts.** Torque connecting rod bolts to 27 N·m (20 ft. lbs.) plus 1/4 turn.

(13) Install balance shafts and housing assembly. (Refer to 9 - ENGINE/VALVE TIMING/BALANCE SHAFT - INSTALLATION)

(14) Install the oil pump and pickup tube. (Refer to 9 - ENGINE/LUBRICATION/OIL PUMP - INSTALLATION)

(15) Install the timing belt rear cover. (Refer to 9 - ENGINE/VALVE TIMING/TIMING BELT / CHAIN COVER(S) - INSTALLATION)

(16) Install the timing belt. (Refer to 9 - ENGINE/VALVE TIMING/TIMING BELT/CHAIN AND SPROCKETS - INSTALLATION)

(17) Install the timing belt front covers. (Refer to 9 - ENGINE/VALVE TIMING/TIMING BELT / CHAIN COVER(S) - INSTALLATION)

(18) Install engine support bracket.

(19) Install the oil pan. (Refer to 9 - ENGINE/LUBRICATION/OIL PAN - INSTALLATION)

(20) Install the oil filter.

(21) Install crankshaft rear oil seal. (Refer to 9 - ENGINE/ENGINE BLOCK/CRANKSHAFT OIL SEAL - REAR - INSTALLATION)

(22) Install flex plate. Apply Mopar® Lock & Seal Adhesive to bolt threads and tighten to 95 N·m (70 ft. lbs.).

(23) Install the engine assembly. (Refer to 9 - ENGINE - INSTALLATION)

CRANKSHAFT MAIN BEARINGS

STANDARD PROCEDURE - MAIN BEARING - FITTING

For crankshaft specifications (Refer to 9 - ENGINE - SPECIFICATIONS).

CRANKSHAFT MAIN BEARINGS

The crankshaft is supported in five main bearings. All upper and lower bearing shells in the crankcase have oil grooves. Crankshaft end play is controlled by a flanged bearing on the number three main bearing journal (Fig. 47).

Upper and lower Number 3 bearing halves are flanged to carry the crankshaft thrust loads and are NOT interchangeable with any other bearing halves in the engine (Fig. 47). All bearing cap bolts removed during service procedures are to be cleaned and oiled before installation. Bearing shells are available in standard and the following undersized: 0.025 mm (0.001 in.) and 0.250 mm (0.010 in.). Never install an undersize bearing that will reduce clearance below specifications. Replace or machine the crankshaft as necessary to obtain proper bearing clearances.

CRANKSHAFT MAIN BEARINGS (Continued)

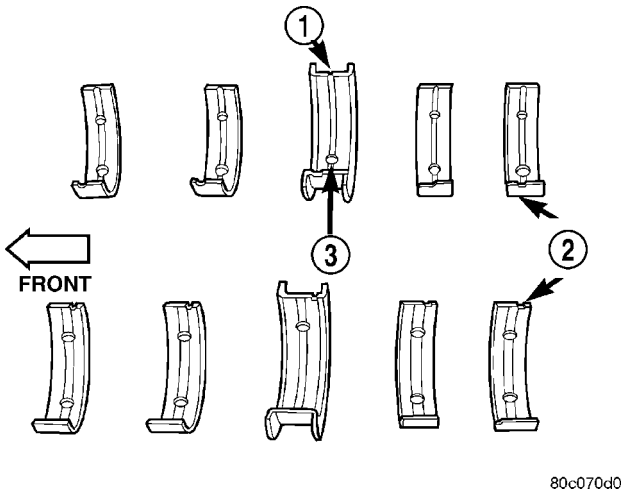

Fig. 47 Main Bearing Identification

1 - OIL GROOVE
2 - MAIN BEARINGS
3 - OIL HOLE

MAIN BEARING INSTALLATION

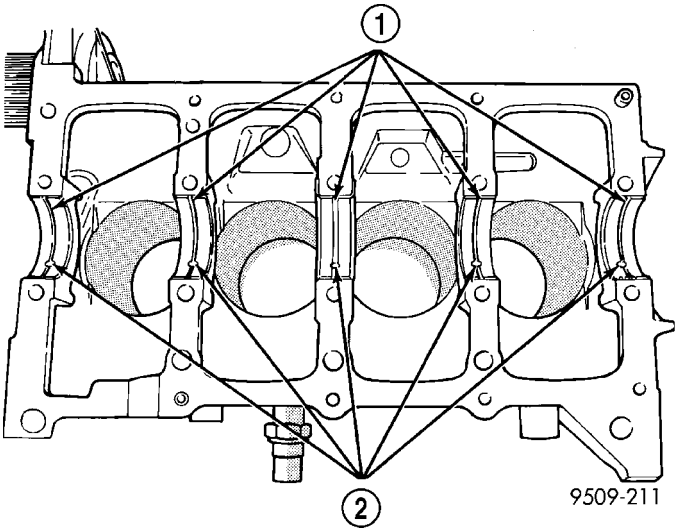

Fig. 48 Installing Main Bearing Upper Shell

1 - LUBRICATION GROOVES
2 - OIL HOLES

(1) Install the main bearing shells with the lubrication groove in the cylinder block (Fig. 48).

(2) Make certain oil holes in block line up with oil holes in bearings. Bearing tabs must seat in the block tab slots.

CAUTION: Do not get oil on the bedplate mating surface. It will may effect the sealer ability to seal the bedplate to cylinder block.

(3) Oil the bearings and journals and install crankshaft.

CAUTION: Use only the specified anaerobic sealer on the bedplate or damage may occur to the engine. Ensure that both cylinder block and bedplate surfaces are clean.

(4) Apply 1.5 to 2.0 mm (0.059 to 0.078 in.) bead of anaerobic sealer Mopar® Bed Plate Sealant to cylinder block as shown in (Fig. 49).

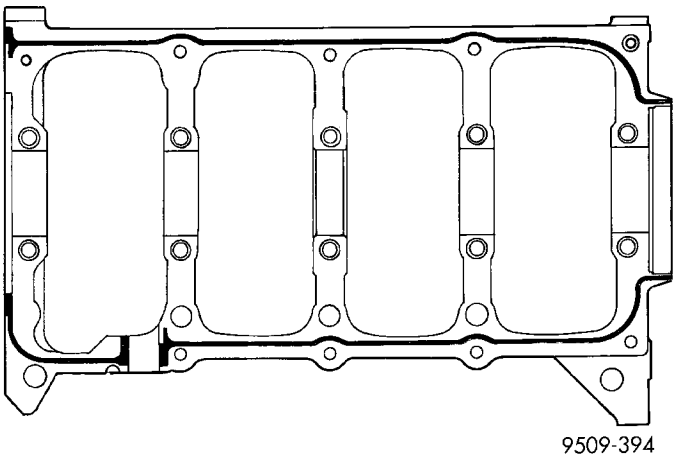

Fig. 49 Main Bearing Caps/Bedplate Sealing

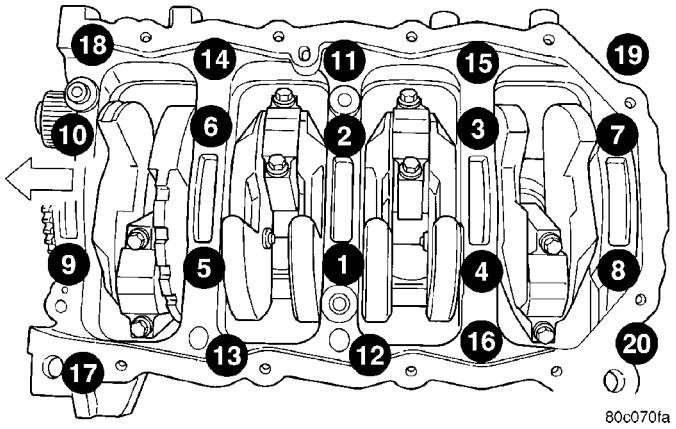

Fig. 50 Main Bearing Caps/Bedplate Tightening Sequence

(5) Install lower main bearings into main bearing cap/bedplate. Make certain the bearing tabs are seated into the bedplate slots.

(6) Position the main bearing/bedplate onto the engine block.

(7) Before installing bolts, lubricate the threads with clean engine oil, wipe off any excess oil.

(8) Install main bearing bedplate to engine block bolts 11, 17 and 20 finger tight. Tighten these bolts down together until the bedplate contacts the cylinder block.

(9) To ensure correct thrust bearing alignment, perform the following steps:

- Step 1: Rotate crankshaft until number 4 piston is at TDC.

CRANKSHAFT MAIN BEARINGS (Continued)

• Step 2: Move crankshaft rearward to limits of travel.

• Step 3: Then, move crankshaft forward to limits of travel.

• Step 4: Wedge an appropriate tool between the rear of the cylinder block **(NOT BED PLATE)** and the rear crankshaft counterweight. This will hold the crankshaft in it's furthest forward position.

• Step 5: Install and tighten bolts (1–10) in sequence shown in (Fig. 50) to 41 N·m (30 ft. lbs.).

• Step 6: Remove wedge tool used to hold crankshaft.

(10) Tighten bolts (1–10) again to 41 N·m (30 ft. lbs.) **PLUS** 1/4 turn in sequence shown in (Fig. 50).

(11) Install main bearing bedplate to engine block bolts (11–20), and torque each bolt to 28 N·m (20 ft. lbs.) in sequence shown in (Fig. 50).

(12) After the main bearing bedplate is installed, check the crankshaft turning torque. The turning torque should not exceed 5.6 N·m (50 in. lbs.).

CRANKSHAFT OIL SEAL - FRONT

REMOVAL

(1) Remove the crankshaft vibration damper (Fig. 51). (Refer to 9 - ENGINE/ENGINE BLOCK/VIBRATION DAMPER - REMOVAL)

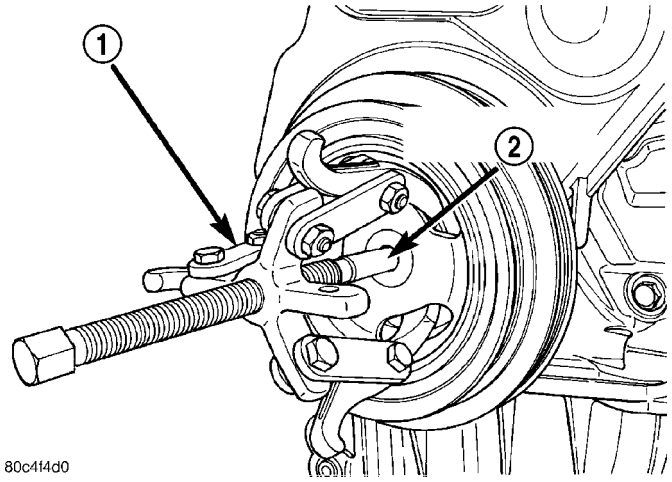

Fig. 51 CRANKSHAFT DAMPER - REMOVAL - TYPICAL

1 - SPECIAL TOOL 1026
2 - SPECIAL TOOL 6827-A- INSERT

(2) Remove timing belt. (Refer to 9 - ENGINE/VALVE TIMING/TIMING BELT/CHAIN AND SPROCKETS - REMOVAL)

(3) Remove crankshaft sprocket using Special Tool 6793 and insert C-4685-C2 (Fig. 52).

CAUTION: Do not nick shaft seal surface or seal bore.

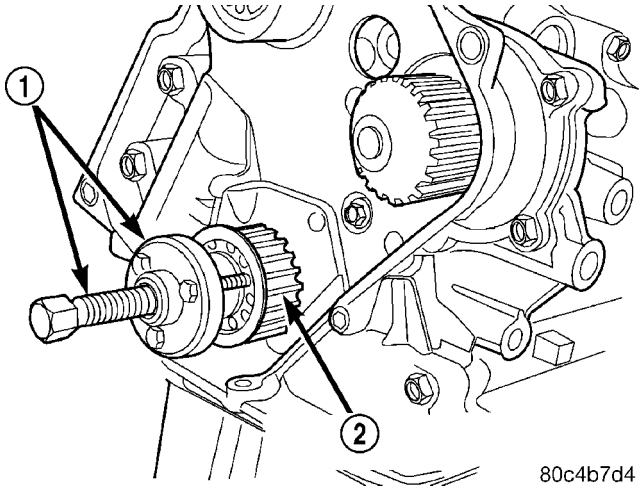

Fig. 52 Crankshaft Sprocket - Removal

1 - SPECIAL TOOL 6793
2 - CRANKSHAFT SPROCKET

(4) Using Tool 6771 to remove front crankshaft oil seal (Fig. 53). Be careful not to damage the seal surface of cover.

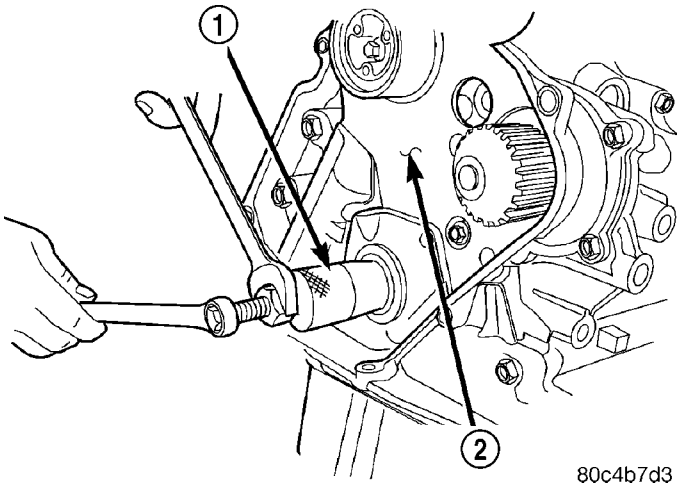

Fig. 53 Front Crankshaft Oil Seal - Removal

1 - SPECIAL TOOL 6771
2 - REAR TIMING BELT COVER

CRANKSHAFT OIL SEAL - FRONT (Continued)

INSTALLATION

(1) Install new seal by using Special Tool 6780 (Fig. 54).

(2) Place seal into opening with seal spring towards the inside of engine. Install seal until flush with cover.

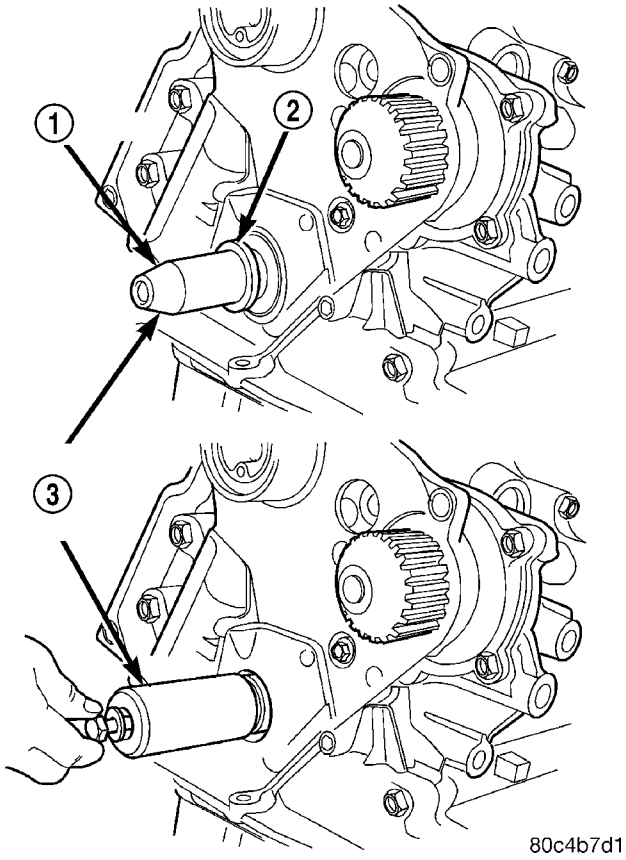

Fig. 54 Crankshaft Front Oil Seal - Installation

1 - PROTECTOR
2 - SEAL
3 - SPECIAL TOOL 6780

(3) Install crankshaft sprocket using Special Tool 6792 (Fig. 55).

(4) Install timing belt. (Refer to 9 - ENGINE/ VALVE TIMING/TIMING BELT/CHAIN AND SPROCKETS - INSTALLATION)

(5) Install crankshaft vibration damper (Fig. 56). (Refer to 9 - ENGINE/ENGINE BLOCK/VIBRATION DAMPER - INSTALLATION)

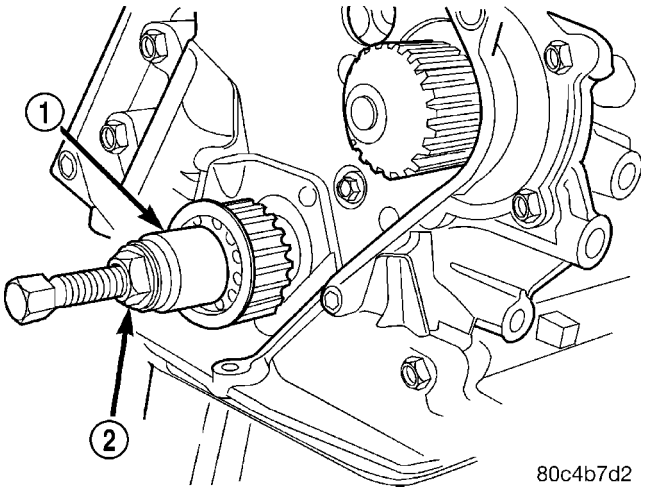

Fig. 55 Crankshaft Sprocket - Installation

1 - SPECIAL TOOL 6792
2 - TIGHTEN NUT TO INSTALL

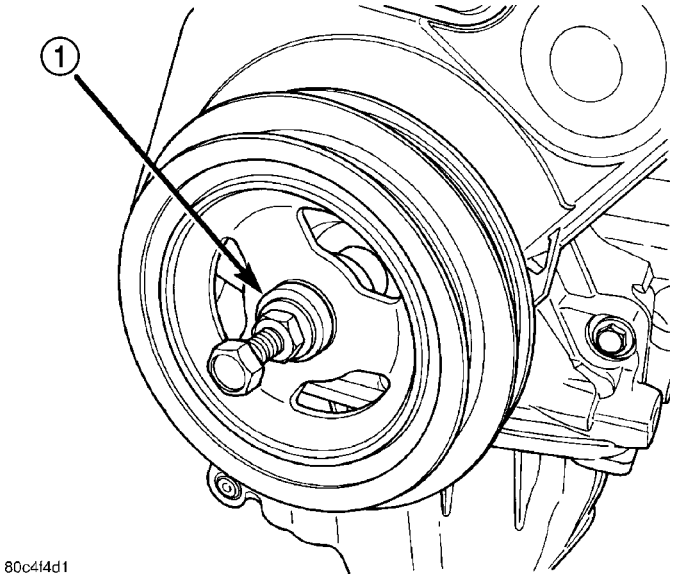

Fig. 56 Crankshaft Damper - Installation - Typical

1 - SPECIAL TOOL 6792

CRANKSHAFT OIL SEAL - REAR

REMOVAL

(1) Remove transmission.
(2) Remove flex plate.
(3) Insert a 3/16 flat bladed screwdriver between the dust lip and the metal case of the crankshaft seal. Angle the screwdriver (Fig. 57)through the dust lip against metal case of the seal. Pry out seal.

CAUTION: Do not permit the screwdriver blade to contact crankshaft seal surface. Contact of the screwdriver blade against crankshaft edge (chamfer) is permitted.

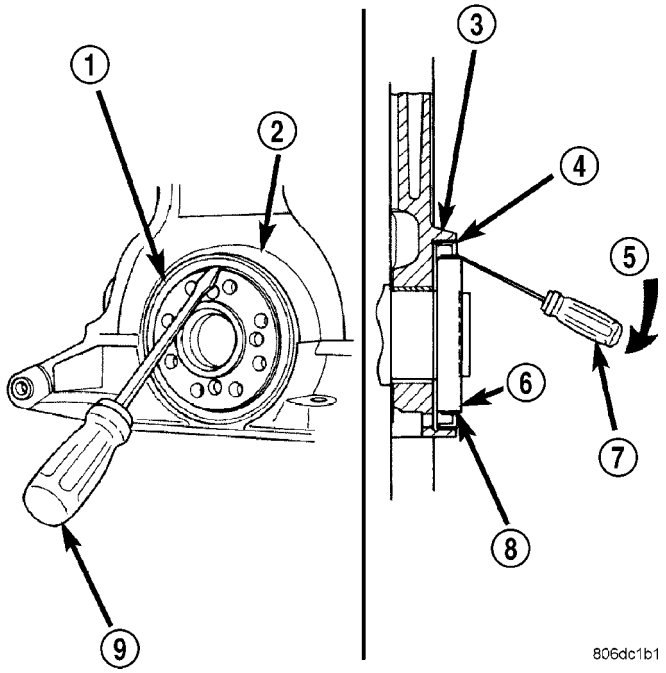

Fig. 57 Rear Crankshaft Oil Seal - Removal

1 - REAR CRANKSHAFT SEAL
2 - ENGINE BLOCK
3 - ENGINE BLOCK
4 - REAR CRANKSHAFT SEAL METAL CASE
5 - PRY IN THIS DIRECTION
6 - CRANKSHAFT
7 - SCREWDRIVER
8 - REAR CRANKSHAFT SEAL DUST LIP
9 - SCREWDRIVER

INSTALLATION

CAUTION: If burr or scratch is present on the crankshaft edge (chamfer), cleanup with 400 grit sand paper to prevent seal damage during installation of new seal.

(1) Lubricate the crankshaft flange with engine oil.
(2) Place Special Tool 6926-1 Seal Guide on crankshaft (Fig. 58).
(3) Position seal over guide tool (Fig. 58). Guide tool should remain on crankshaft during installation of seal. Ensure that the lip of the seal is facing towards the crankcase during installation.

CAUTION: If the seal is driven into the block past flush, this may cause an oil leak.

(4) Drive the seal into the block using Special Tool 6926-2 and handle C-4171 (Fig. 59) until the tool bottoms out against the block (Fig. 60).

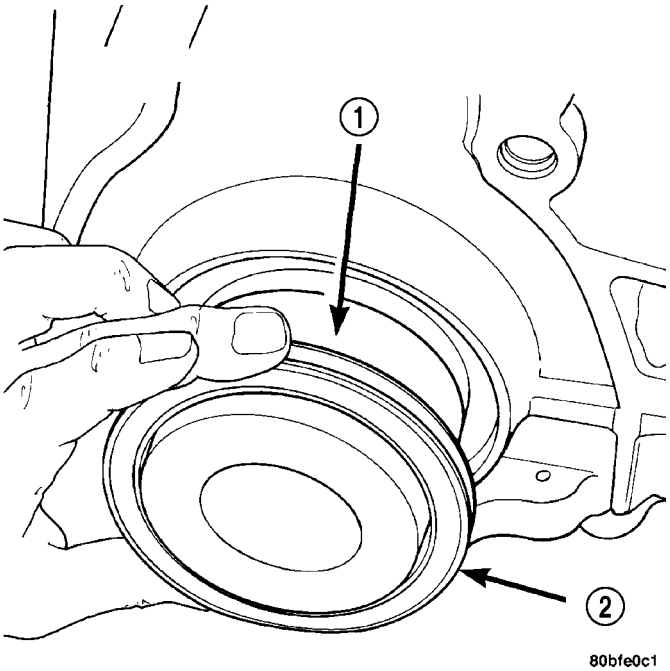

Fig. 58 Rear Crankshaft Seal and Special Tool 6926-1

1 - SPECIAL TOOL 6926–1 PILOT
2 - SEAL

CRANKSHAFT OIL SEAL - REAR (Continued)

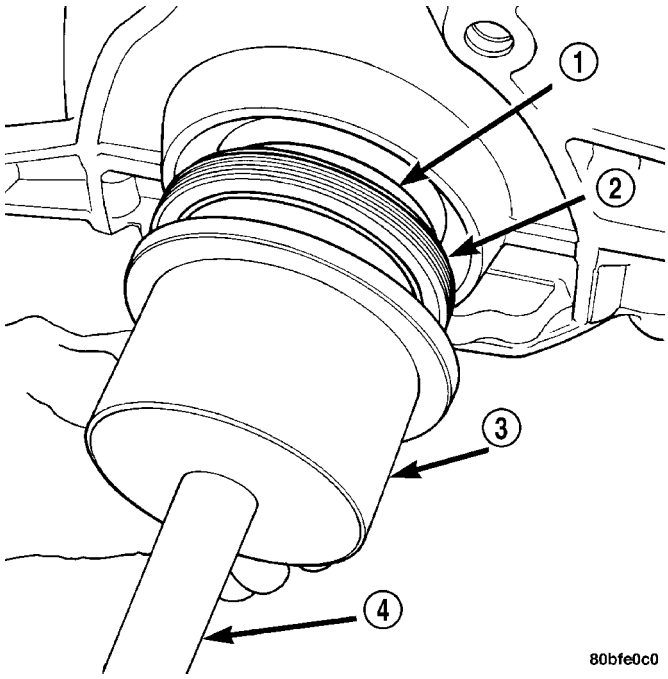

Fig. 59 Crankshaft Seal and Special Tools 6926-2 & C-4171

1 - SPECIAL TOOL 6926–1 PILOT
2 - SEAL
3 - SPECIAL TOOL 6926–2 INSTALLER
4 - SPECIAL TOOL C-4171

(5) Install flex plate. Apply Mopar® Lock & Seal Adhesive to bolt threads and tighten bolts to 95 N·m (70 ft. lbs.).

(6) Install the transmission.

PISTON & CONNECTING ROD

DESCRIPTION

The pistons are made of a cast aluminum alloy. The pistons have pressed-in pins attached to forged powdered metal connecting rods. The pistons pin is offset 1 mm (0.0394 in.) towards the thrust side of the piston. The connecting rods are a cracked cap design and are not repairable. Hex head cap screws are used to provide alignment and durability in the assembly. The pistons and connecting rods are serviced as an assembly.

OPERATION

The piston and connecting rod is the link between the combustion force to the crankshaft.

REMOVAL

NOTE: Cylinder Head must be removed before Pistons and Rods. Refer to Cylinder Head Removal in this section.

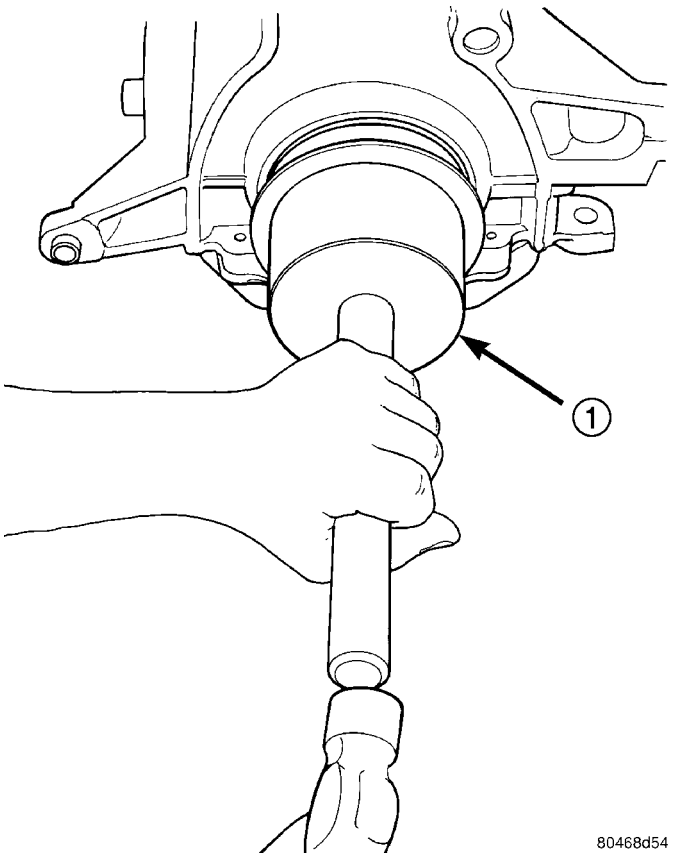

Fig. 60 Rear Crankshaft Seal - Installation

1 - SPECIAL TOOL 6926–2 INSTALLER

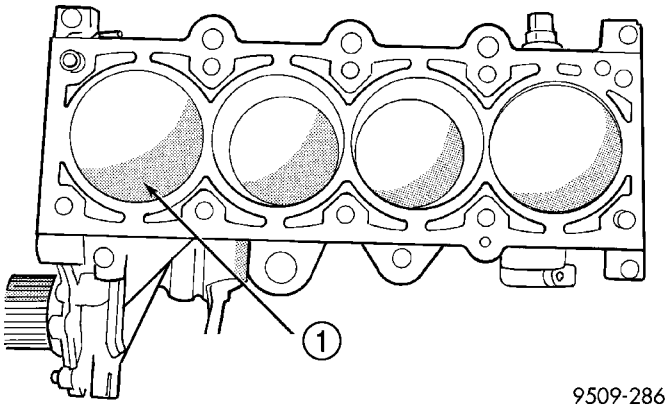

Fig. 61 Piston Markings

1 - DIRECTIONAL ARROW WILL BE IMPRINTED IN THIS AREA

(1) Remove top ridge of cylinder bores with a reliable ridge reamer before removing pistons from cylinder block. **Be sure to keep tops of pistons covered during this operation**. Mark piston with matching cylinder number (Fig. 61).

PISTON & CONNECTING ROD (Continued)

(2) Remove oil pan. Scribe the cylinder number on the side of the rod and cap (Fig. 62) for identification.

(3) Pistons have a directional stamping in the front half of the piston facing towards the **front** of engine.

(4) Pistons and connecting rods must be removed from top of cylinder block. Rotate crankshaft so that each connecting rod is centered in cylinder bore.

(5) Remove Balance Shaft Assembly. Refer to Balance Shaft Removal in this section.

(6) Remove connecting rod cap bolts. Push each piston and rod assembly out of cylinder bore.

NOTE: Be careful not to nick crankshaft journals.

(7) After removal, install bearing cap on the mating rod.

(8) Piston and Rods are serviced as an assembly.

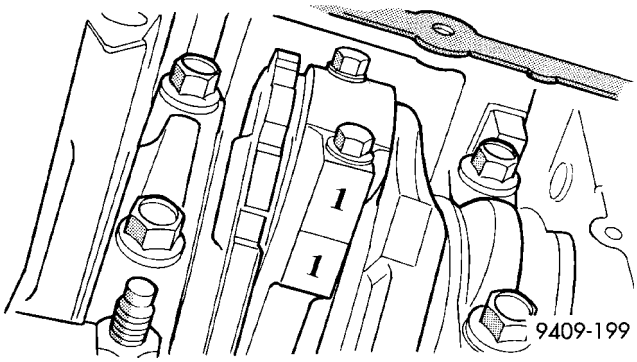

Fig. 62 Identify Connecting Rod to Cylinder

INSTALLATION

(1) Before installing pistons and connecting rod assemblies into the bore, be sure that compression ring gaps are staggered so that neither is in line with oil ring rail gap.

(2) Before installing the ring compressor, make sure the oil ring expander ends are butted and the rail gaps located as shown in (Fig. 63). As viewed from top.

(3) Immerse the piston head and rings in clean engine oil, slide the ring compressor, over the piston (Fig. 64). **Be sure position of rings does not change during this operation**.

(4) The directional stamp on the piston should face toward the front of the engine.

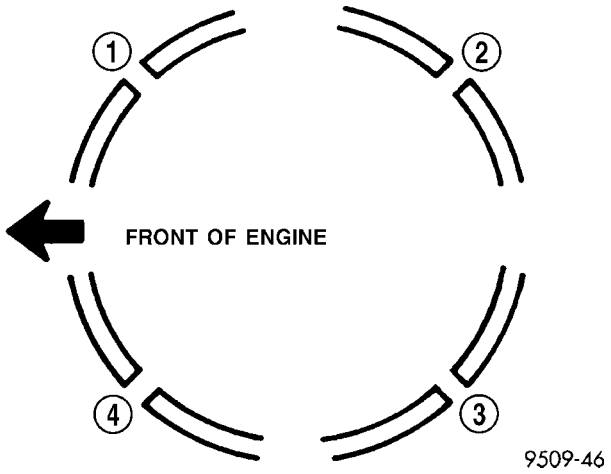

Fig. 63 Piston Ring End Gap Position

1 - GAP OF LOWER SIDE RAIL
2 - NO. 1 RING GAP
3 - GAP OF UPPER SIDE RAIL
4 - NO. 2 RING GAP AND SPACER EXPANDER GAP

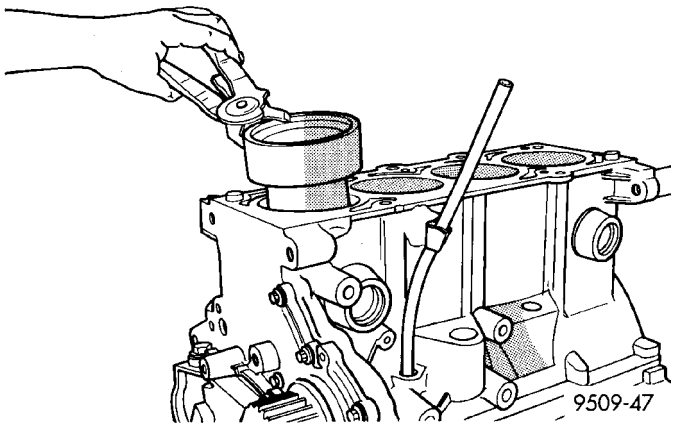

Fig. 64 Piston - Installation

(5) Rotate crankshaft so that the connecting rod journal is on the center of the cylinder bore. Insert rod and piston assembly into cylinder bore and guide rod over the crankshaft journal.

(6) Tap the piston down in cylinder bore, using a hammer handle. At the same time, guide connecting rod into position on connecting rod journal.

NOTE: The connecting rod cap bolts should not be reused.

PISTON & CONNECTING ROD (Continued)

(7) Before installing the **NEW** bolts the threads should be coated with clean engine oil.

(8) Install each bolt finger tight than alternately torque each bolt to assemble the cap properly.

CAUTION: Do not use a torque wrench for second part of last step.

(9) Tighten the bolts to 54 N·m PLUS 1/4 turn (40 ft. lbs. PLUS 1/4 turn).

(10) Using a feeler gauge, check connecting rod side clearance (Fig. 65).

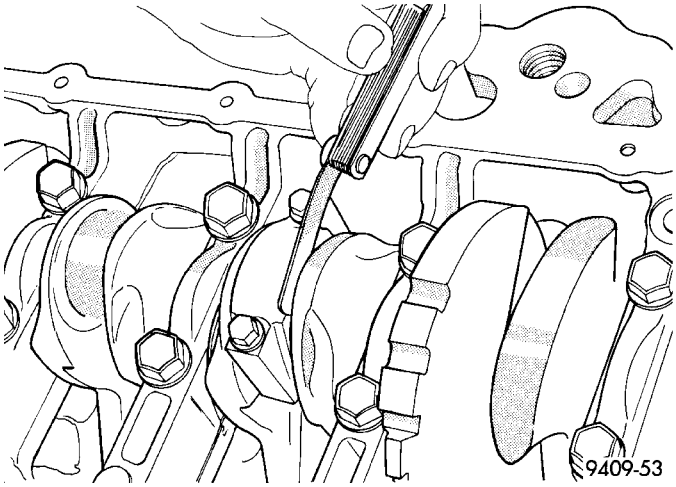

Fig. 65 Checking Connecting Rod Side Clearance

PISTON RINGS

STANDARD PROCEDURE

PISTON RING - FITTING

(1) Wipe cylinder bore clean. Insert ring and push down with piston to ensure it is square in bore. The ring gap measurement must be made with the ring positioning at least 12 mm (0.50 inch) from bottom of cylinder bore. Check gap with feeler gauge (Fig. 66). Refer to Engine Specifications.

(2) Check piston ring to groove side clearance (Fig. 67). Refer to Engine Specifications.

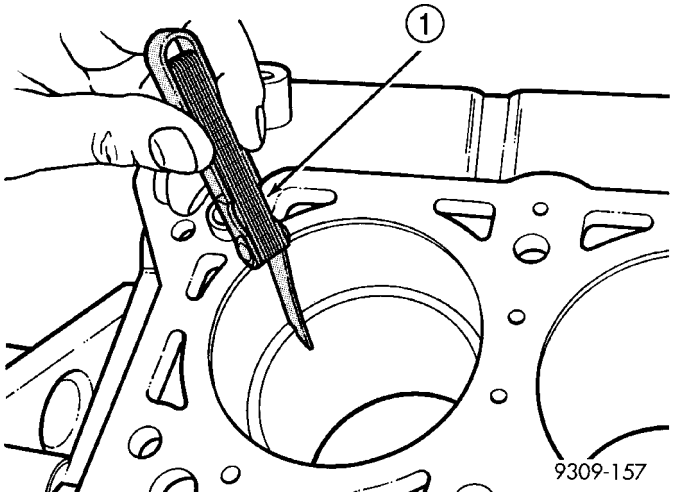

Fig. 66 Piston Ring Gap

1 - FEELER GAUGE

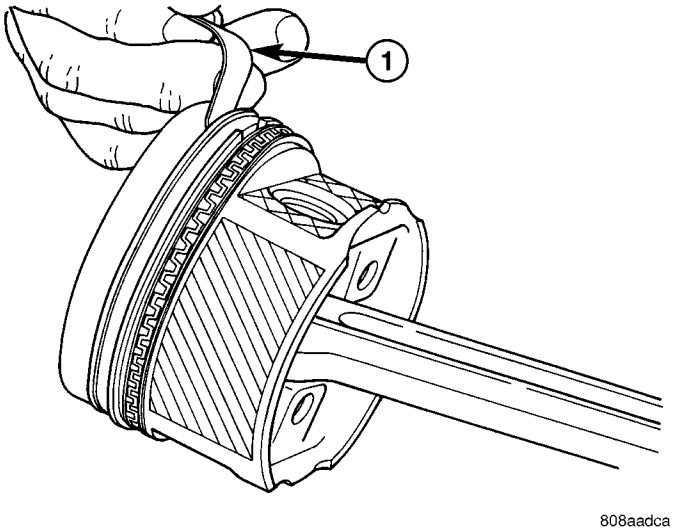

Fig. 67 Piston Ring Side Clearance

1 - FEELER GAUGE

PISTON RINGS (Continued)

PISTON RINGS - INSTALLATION

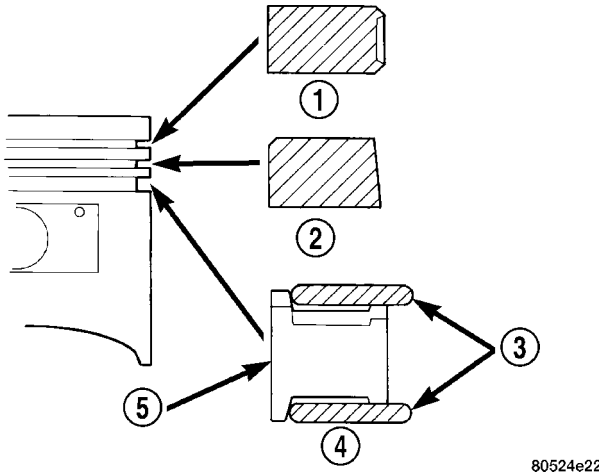

Fig. 68 Piston Ring Installation

1 - NO. 1 PISTON RING
2 - NO. 2 PISTON RING
3 - SIDE RAIL
4 - OIL RING
5 - SPACER EXPANDER

(1) Install rings with manufacturers I.D. mark facing up, to the top of the piston (Fig. 68).

CAUTION: Install piston rings in the following order:

a. Oil ring expander.
b. Upper oil ring side rail.
c. Lower oil ring side rail.
d. No. 2 Intermediate piston ring.
e. No. 1 Upper piston ring.

(2) Install the side rail by placing one end between the piston ring groove and the expander. Hold end firmly and press down the portion to be installed until side rail is in position. **Do not use a piston ring expander** (Fig. 69).

(3) Install upper side rail first and then the lower side rail.

(4) Install No. 2 piston ring and then No. 1 piston ring.

(5) Position piston ring end gaps as shown in (Fig. 70).

(6) Position oil ring expander gap at least 45° from the side rail gaps but **not** on the piston pin center or on the thrust direction. Staggering ring gap is important for oil control.

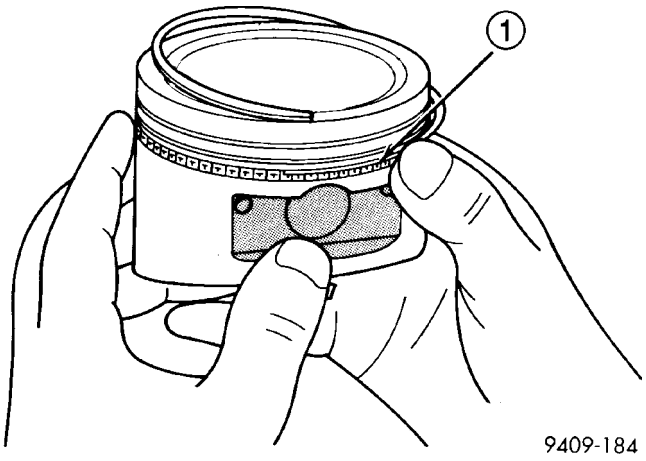

Fig. 69 Installing Side Rail - Typical

1 - SIDE RAIL END

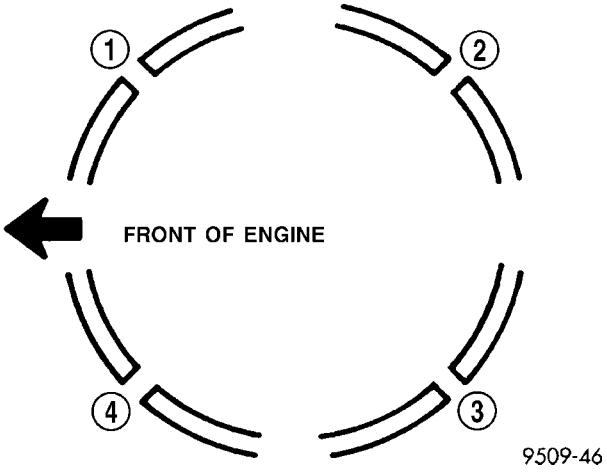

Fig. 70 Piston

1 - GAP OF LOWER SIDE RAIL
2 - NO. 1 RING GAP
3 - GAP OF UPPER SIDE RAIL
4 - NO. 2 RING GAP AND SPACER EXPANDER GAP

VIBRATION DAMPER

REMOVAL

(1) Remove accesory drive belts. (Refer to 7 - COOLING/ACCESSORY DRIVE/DRIVE BELTS - REMOVAL)

(2) Remove crankshaft damper bolt.

(3) Remove damper using Special Tool 3-Jaw Puller 1026 and Insert 6827–A (Fig. 71).

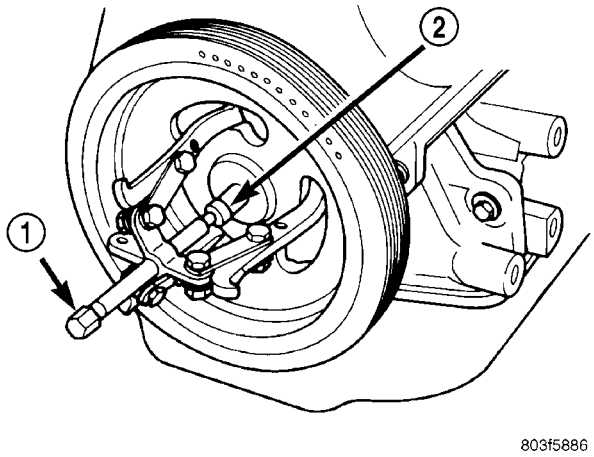

Fig. 71 Crankshaft Vibration Damper - Removal - Typical

1 - SPECIAL TOOL 1026 3-JAW PULLER
2 - SPECIAL TOOL 6827–A INSERT

INSTALLATION

(1) Install crankshaft vibration damper using M12 1.75 x 150 mm bolt, washer, thrust bearing and nut from Special Tool 6792 (Fig. 72).

(2) Install crankshaft vibration damper bolt and tighten to 142 N·m (105 ft. lbs.).

(3) Install accessory drive belts. (Refer to 7 - COOLING/ACCESSORY DRIVE/DRIVE BELTS - INSTALLATION)

STRUCTURAL COLLAR

REMOVAL

(1) Raise vehicle on hoist.

(2) Remove structural collar attaching bolts.

(3) Remove collar.

INSTALLATION

CAUTION: Torque procedure for the structural collar must be followed or damage could occur to oil pan and collar.

(1) Perform the following steps for installing structural collar.

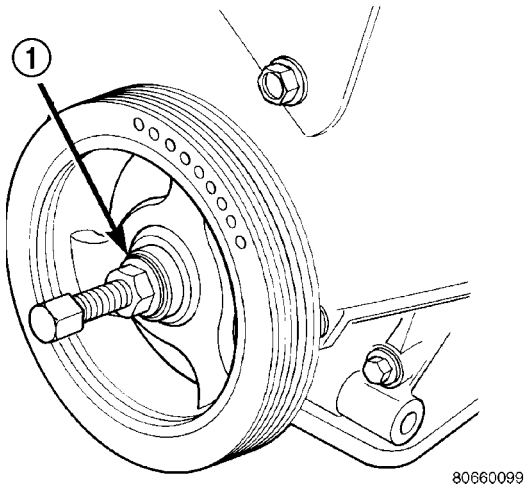

Fig. 72 Crankshaft Vibration Damper - Installation - Typical

1 - M12–1.75 × 150 MM BOLT, WASHER AND THRUST BEARING FROM SPECIAL TOOL 6792

- Step 1: Position collar between transmission and oil pan. Install collar to transmission bolts, **hand start only**.
- Step 2: Install collar to oil pan bolts, **hand snug only.**
- Step 3: Tighten collar to transmission bolts.
- Step 4: Tighten collar to oil pan bolts.

(2) Lower vehicle.

ENGINE MOUNTING

DESCRIPTION

The engine mounting system consist of three mounts; right and a left side support the powertrain, and rear mount to control powertrain torque. The mounts are of molded rubber material.

FRONT MOUNT

REMOVAL

(1) Raise vehicle on hoist.

(2) Remove the front engine mount through bolt from the insulator.

(3) Remove the engine front mount bolts and remove the insulator assembly.

(4) Remove the front mounting bracket from engine, if necessary.

FRONT MOUNT (Continued)

INSTALLATION

(1) Install the insulator mount assembly (Fig. 73)and (Fig. 74).

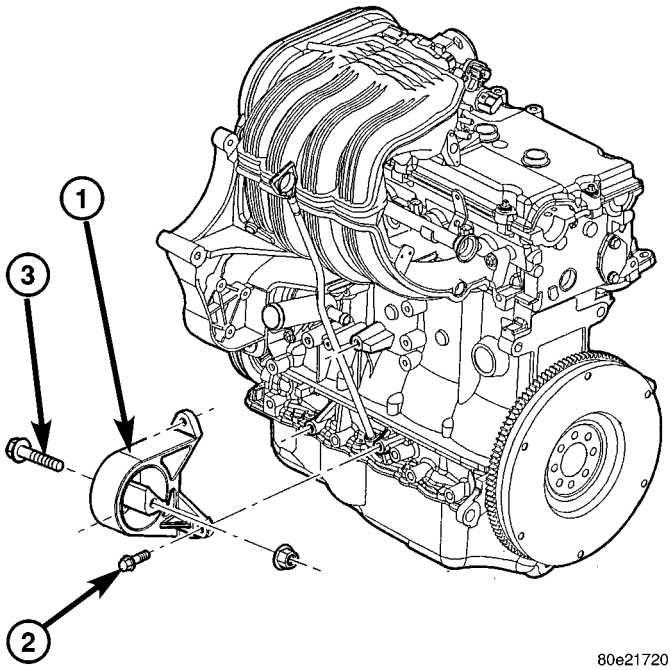

Fig. 73 LH ENGINE MOUNT

1 - ENGINE MOUNT
2 - ENGINE MOUNT BOLT (3)
3 - ENGINE MOUNT THROUGH BOLT

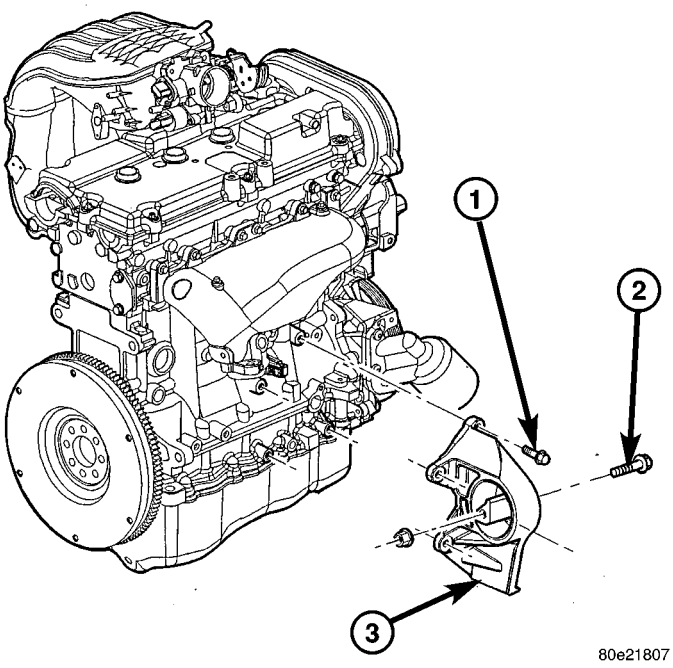

Fig. 74 RH ENGINE MOUNT

1 - ENGINE MOUNT BOLT (4)
2 - ENGINE MOUNT THROUGH BOLT
3 - ENGINE MOUNT

(2) Tighten the mount to engine bolts.
(3) Loosely install the front engine mount through bolt to the insulator.
(4) Lower the engine.
(5) Tighten the through bolt.
(6) Lower the vehicle.

REAR MOUNT

REMOVAL

NOTE: A resilient rubber cushion supports the transmission at the rear between the transmission extension housing and the rear support crossmember or skid plate.

(1) Disconnect negative cable from battery.
(2) Raise the vehicle and support the transmission.
(3) Remove the nuts holding the support cushion to the crossmember. Remove the crossmember.

MANUAL TRANSMISSION

a. Remove the support cushion nuts and remove the cushion.
b. Remove the transmission support bracket bolts and remove the bracket from the transmission.

AUTOMATIC TRANSMISSION

a. Remove the support cushion bolts and remove the cushion and the support bracket from the transmission (4WD) or from the adaptor bracket (2WD).
b. On 2WD vehicles, remove the bolts holding the transmission support adaptor bracket to the transmission. Remove the adaptor bracket.

INSTALLATION

MANUAL TRANSMISSION:

(1) Install the support cushion to the transmission (Fig. 75)or (Fig. 76). Install the bolts and tighten.
(2) Position the crossmember in the vehicle. Install the crossmember to mount through bolt and nut.
(3) Install crossmember-to-sill bolts and tighten to 41 N·m (30 ft. lbs.) torque.
(4) Remove the transmission support.
(5) Lower the vehicle.
(6) Connect negative cable to battery.

AUTOMATIC TRANSMISSION:

(1) Install the transmission mount to transmission (Fig. 77) and (Fig. 78). Install the bolts.
(2) Position the crossmember in the vehicle. Install the crossmember to mount through bolt and nut.
(3) Remove the transmission support.
(4) Lower the vehicle.
(5) Connect negative cable to battery.

REAR MOUNT (Continued)

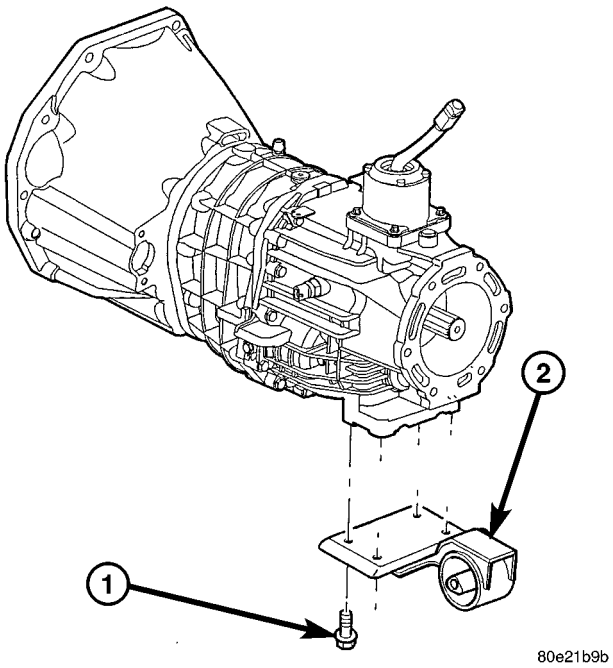

Fig. 75 TRANSMISSION MOUNT - 2.4L MANUAL TRANS

1 - TRANSMISSION MOUNT
2 - MOUNTING BOLT

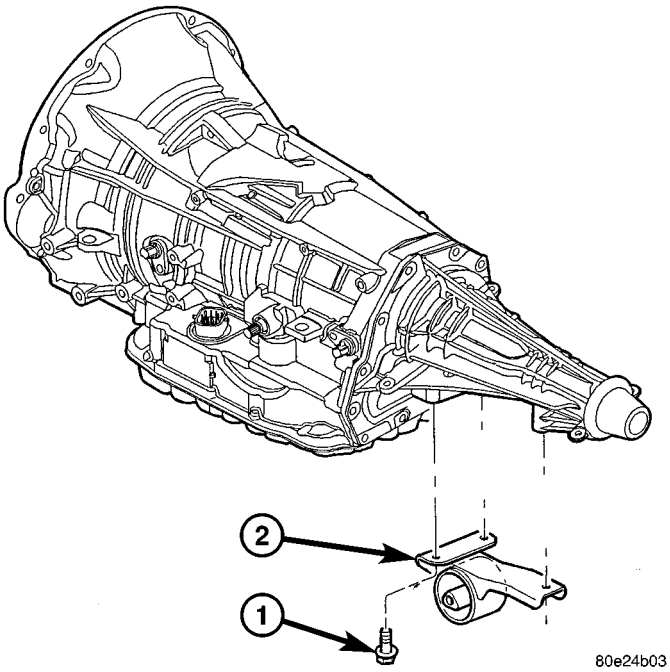

Fig. 77 TRANSMISSION MOUNT - 3.7L 2WD AUTO TRANS

1 - BOLT
2 - MOUNT

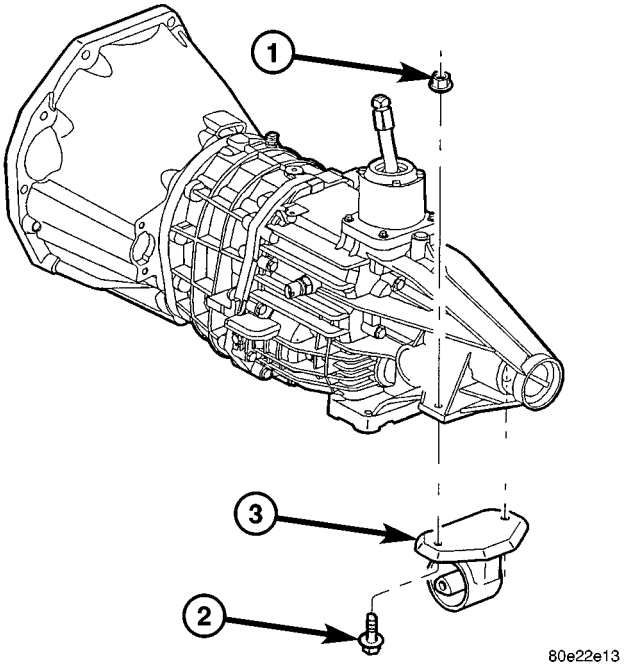

Fig. 76 TRANSMISSION MOUNT - 3.7L MANUAL TRANS 2WD

1 - NUT
2 - BOLT
3 - TRANS MOUNT

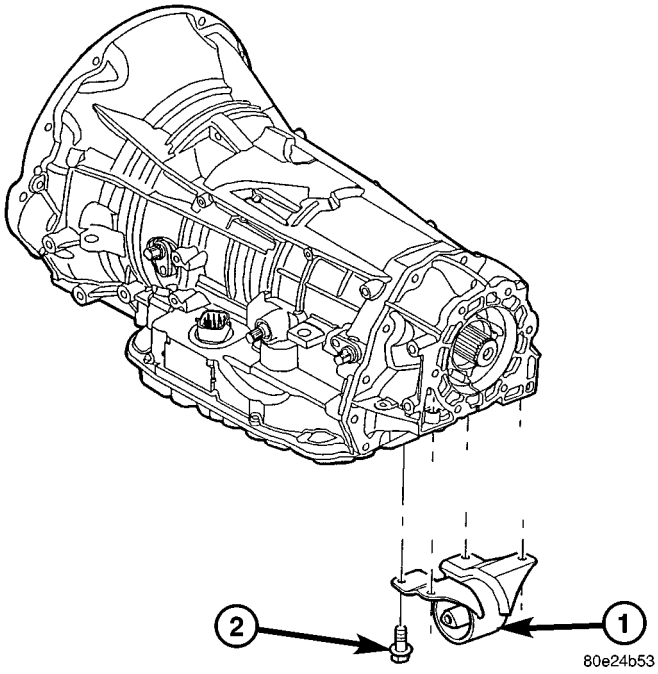

Fig. 78 TRANSMISSION MOUNT - 3.7L 4WD AUTO TRANS

1 - MOUNT
2 - BOLT

LUBRICATION

DESCRIPTION

The lubrication system is a full-flow filtration, pressure feed type. The oil pump is mounted in the front engine cover and driven by the crankshaft.

OPERATION

Engine oil drawn up through the pickup tube and is pressurized by the oil pump and routed through the full-flow filter to the main oil gallery running the length of the cylinder block. A diagonal hole in each bulkhead feeds oil to each main bearing. Drilled passages within the crankshaft route oil from main bearing journals to connecting rod journals. Balance shaft lubrication is provided through an oil passage from the number one main bearing cap through the balance shaft carrier support leg. This passage directly supplies oil to the front bearings and internal machined passages in the shafts that routes oil from front to the rear shaft bearing journals. A vertical hole at the number five bulkhead routes pressurized oil through a restrictor (integral to the cylinder head gasket) up past a cylinder head bolt to an oil gallery running the length of the cylinder head. The camshaft journals are partially slotted to allow a predetermined amount of pressurized oil to pass into the bearing cap cavities. Lubrication of the camshaft lobes are provided by small holes in the camshaft bearing caps that are directed towards each lobe. Oil returning to the pan from pressurized components supplies lubrication to the valve stems. Cylinder bores and wrist pins are splash lubricated from directed slots on the connecting rod thrust collars.

DIAGNOSIS AND TESTING

ENGINE OIL PRESSURE CHECKING

(1) Disconnect and remove oil pressure switch. (Refer to 9 - ENGINE/LUBRICATION/OIL PRESSURE SENSOR/SWITCH - REMOVAL)

(2) Install Special Tools C-3292 Gauge with 8406 Adaptor fitting.

(3) Start engine and record oil pressure. Refer to Specifications for correct oil pressure requirements. (Refer to 9 - ENGINE - SPECIFICATIONS)

CAUTION: If oil pressure is 0 at idle, do not perform the 3000 RPM test

(4) If oil pressure is 0 at idle. Shut off engine, check for pressure relief valve stuck open, a clogged oil pick-up screen or a damaged oil pick-up tube O-ring.

(5) After test is complete, remove test gauge and fitting.

(6) Install oil pressure switch and connector. (Refer to 9 - ENGINE/LUBRICATION/OIL PRESSURE SENSOR/SWITCH - INSTALLATION)

OIL

STANDARD PROCEDURE

ENGINE OIL LEVEL CHECK

The best time to check engine oil level is after it has sat overnight, or if the engine has been running, allow the engine to be shut off for at least 5 minutes before checking oil level.

Checking the oil while the vehicle is on level ground will improve the accuracy of the oil level reading. Remove dipstick and observe oil level. Add oil only when the level is at or below the ADD mark (Fig. 79).

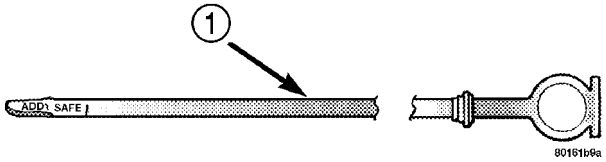

Fig. 79 Oil Level

1 - ENGINE OIL LEVEL DIPSTICK

ENGINE OIL AND FILTER CHANGE

Change engine oil at mileage and time intervals described in the Maintenance Schedule. (Refer to LUBRICATION & MAINTENANCE/MAINTENANCE SCHEDULES - DESCRIPTION)

WARNING: NEW OR USED ENGINE OIL CAN BE IRRITATING TO THE SKIN. AVOID PROLONGED OR REPEATED SKIN CONTACT WITH ENGINE OIL. CONTAMINANTS IN USED ENGINE OIL, CAUSED BY INTERNAL COMBUSTION, CAN BE HAZARDOUS TO YOUR HEALTH. THOROUGHLY WASH EXPOSED SKIN WITH SOAP AND WATER. DO NOT WASH SKIN WITH GASOLINE, DIESEL FUEL, THINNER, OR SOLVENTS, HEALTH PROBLEMS CAN RESULT. DO NOT POLLUTE, DISPOSE OF USED ENGINE OIL PROPERLY. CONTACT YOUR DEALER OR GOVERNMENT AGENCY FOR LOCATION OF COLLECTION CENTER IN YOUR AREA.

Run engine until achieving normal operating temperature.

(1) Position the vehicle on a level surface and turn engine off.

OIL (Continued)

(2) Hoist and support vehicle on safety stands. Refer to Hoisting and Jacking Recommendations. (Refer to LUBRICATION & MAINTENANCE/HOISTING - STANDARD PROCEDURE)

(3) Remove oil fill cap.

(4) Place a suitable drain pan under crankcase drain.

(5) Remove drain plug from crankcase and allow oil to drain into pan. Inspect drain plug threads for stretching or other damage. Replace drain plug and gasket if damaged.

(6) Remove oil filter. (Refer to 9 - ENGINE/LUBRICATION/OIL FILTER - REMOVAL)

(7) Install and tighten drain plug in crankcase.

(8) Install new oil filter. (Refer to 9 - ENGINE/LUBRICATION/OIL FILTER - INSTALLATION)

(9) Lower vehicle and fill crankcase with specified type and amount of engine oil. (Refer to LUBRICATION & MAINTENANCE/FLUID TYPES - DESCRIPTION)

(10) Install oil fill cap.

(11) Start engine and inspect for leaks.

(12) Stop engine and inspect oil level.

NOTE: Care should be exercised when disposing used engine oil after it has been drained from a vehicle engine. Refer to the WARNING listed above.

OIL FILTER

DESCRIPTION

The engine oil filter is a high quality full-flow, disposable type. Replace the oil filter with a Mopar® or the equivalent.

REMOVAL

(1) Raise vehicle on hoist.

(2) Position an oil collecting container under oil filter location.

CAUTION: When servicing the oil filter avoid deforming the filter can by installing the remove/install tool band strap against the can to base lock seam. The lock seam joining the can to the base is reinforced by the base plate.

(3) Using a suitable filter wrench, turn oil filter (Fig. 80) counterclockwise to remove.

INSTALLATION

(1) Clean and check filter mounting surface. The surface must be smooth, flat and free of debris or pieces of gasket.

(2) Lubricate new oil filter gasket with clean engine oil.

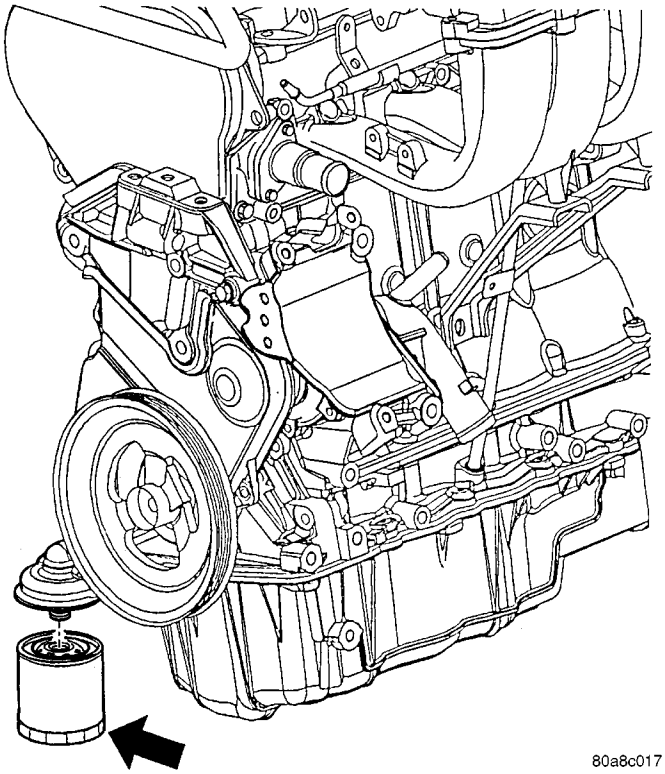

Fig. 80 Oil Filter - Typical

(3) Screw oil filter on until the gasket contacts base. Tighten to 21 N·m (15 ft. lbs.).

OIL PAN

REMOVAL

(1) Remove air cleaner assembly.

(2) Raise vehicle on hoist and drain engine oil.

(3) Loosen the engine mount thru bolts.

(4) Disconnect exhaust pipe at manifold.

(5) Remove structural collar, if equipped.

(6) Remove front axle mounting bolts, and lower axle as far possible, if equipped.

(7) Position Special Tool 8534 on fender lip and align the slots in the brackets with the fender mounting holes.

(8) Secure brackets to the fender using four M6 X 1.0 X 25 MM flanged cap screws.

(9) Tighten the thumbscrews to secure the sleeves to the support tube.

(10) Secure the support tube in an upright position.

(11) Assemble the flat washer, thrust bearing, hook and T handle.

(12) Using the M10 X 1.5 X 40 mm capscrew supplied with the support fixture, secure the chain to the front cover and the hook.

(13) Support engine as needed.

(14) Remove oil pan attaching bolts.

OIL PAN (Continued)

(15) Remove oil pan.
(16) Clean oil pan and all gasket surfaces.

INSTALLATION

(1) Install the oil pan gasket to the block.
(2) Apply a 3MM (1/8 inch) bead of Mopar® Engine RTV at the oil pump to engine block parting line (Fig. 81).

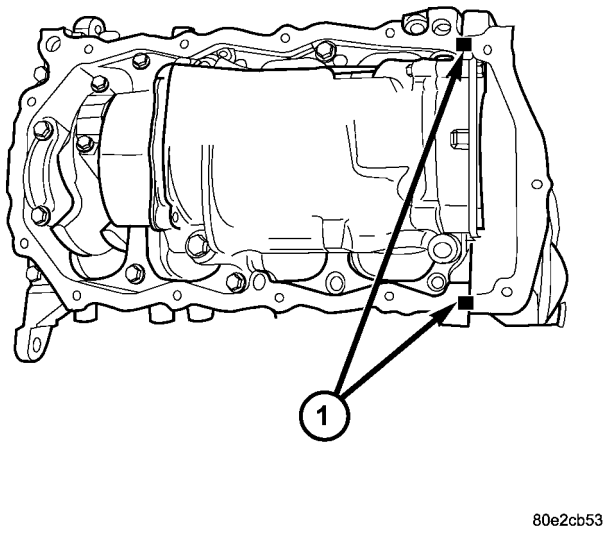

Fig. 81 OIL PAN GASKET INSTALLATION

1 - SEALER LOCATION

(3) Install pan and tighten the screws to 12 N·m (105 in. lbs.).
(4) Lower engine, and remove Special Tool 8534.
(5) Tighten engine mount thru bolts.
(6) Raise the front axle into position, and reinstall front axle mounting bolts. If equipped.
(7) Reconnect exhaust pipe to manifold.
(8) Install structural collar, if equipped.
(9) Lower vehicle.
(10) Fill engine crankcase with proper oil to correct level.
(11) Reinstall air cleaner assembly.

OIL PRESSURE SENSOR/ SWITCH

DESCRIPTION

The 3–wire, electrical/mechanical engine oil pressure sensor (sending unit) is located in an engine oil pressure gallery.

OPERATION

The oil pressure sensor uses three circuits. They are:
- A 5 volt power supply from the Powertrain Control Module (PCM)
- A sensor ground through the PCM's sensor return
- A signal to the PCM relating to engine oil pressure

The oil pressure sensor has a 3 wire electrical function very much like the Manifold Absolute Pressure (MAP) sensor. Meaning different pressures relate to different output voltages.

A 5 volt supply is sent to the sensor from the PCM to power up the sensor. The sensor returns a voltage signal back to the PCM relating to engine oil pressure. This signal is then transferred (bussed) to the instrument panel on either a CCD or PCI bus circuit (depending on vehicle line) to operate the oil pressure gauge and the check gauges lamp. Ground for the sensor is provided by the PCM through a low-noise sensor return.

OIL PUMP

REMOVAL

REMOVAL

(1) Disconnect negative cable from battery.
(2) Remove timing belt. (Refer to 9 - ENGINE/ VALVE TIMING/TIMING BELT/CHAIN AND SPROCKETS - REMOVAL)
(3) Remove timing belt rear cover. (Refer to 9 - ENGINE/VALVE TIMING/TIMING BELT / CHAIN COVER(S) - REMOVAL)
(4) Remove oil pan. (Refer to 9 - ENGINE/LUBRICATION/OIL PAN - REMOVAL)
(5) Remove crankshaft sprocket using Special Tools 6793 and C-4685-C2 (Fig. 82).

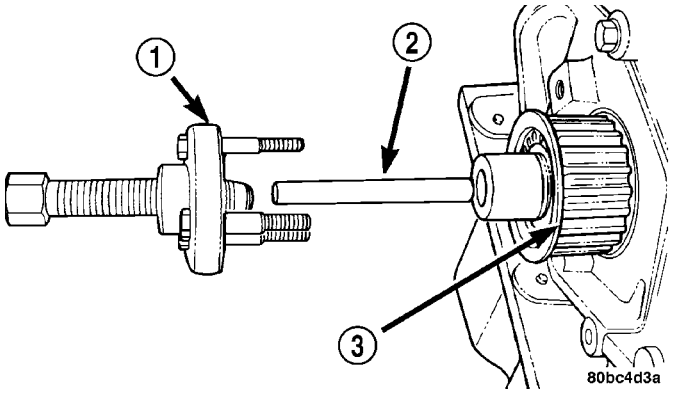

Fig. 82 Crankshaft Sprocket - Removal

1 - SPECIAL TOOL 6793
2 - SPECIAL TOOL C-4685–C2
3 - CRANKSHAFT SPROCKET

OIL PUMP (Continued)

(6) Remove crankshaft key (Fig. 83).

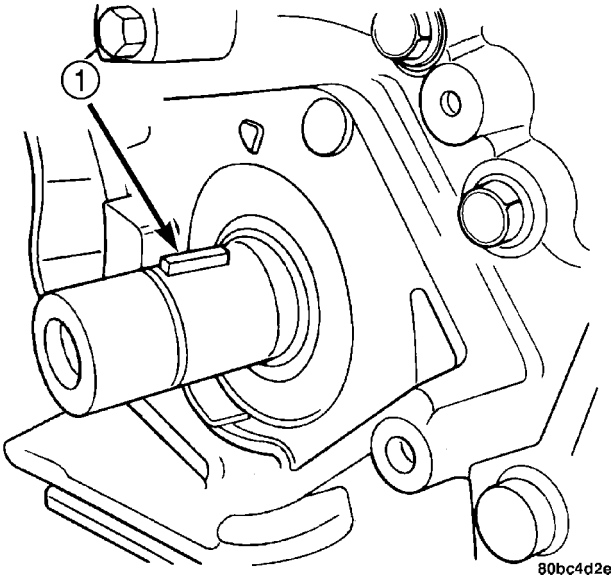

Fig. 83 Crankshaft Key

1 - CRANKSHAFT KEY

(7) Remove oil pick-up tube.

(8) Remove oil pump (Fig. 84) and front crankshaft seal.

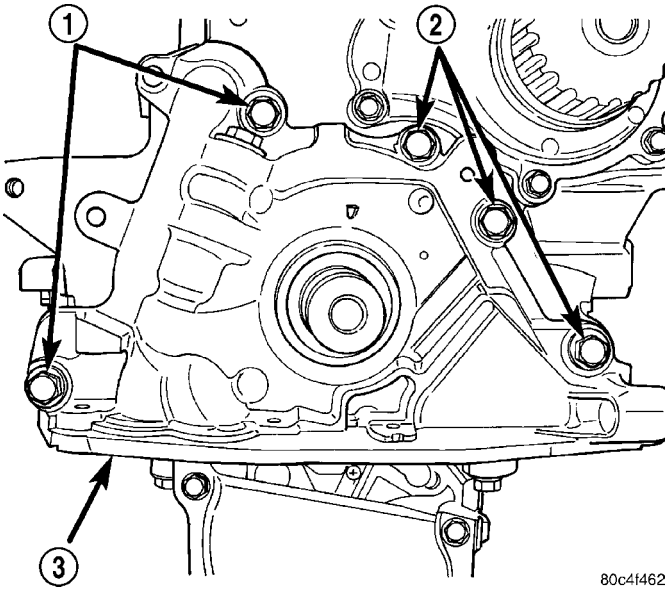

Fig. 84 Oil Pump

1 - BOLTS
2 - BOLTS
3 - OIL PUMP

REMOVAL

(1) Disconnect negative cable from battery.

(2) Remove timing belt (Refer to 9 - ENGINE/VALVE TIMING/TIMING BELT AND SPROCKETS - REMOVAL).

(3) Remove timing belt rear cover (Refer to 9 - ENGINE/VALVE TIMING/TIMING BELT COVER(S) - REMOVAL).

(4) Remove oil pan (Refer to 9 - ENGINE/LUBRICATION/OIL PAN - REMOVAL).

(5) Remove crankshaft sprocket using Special Tools 6793 and C-4685-C2 (Fig. 85).

(6) Remove crankshaft key (Fig. 86).

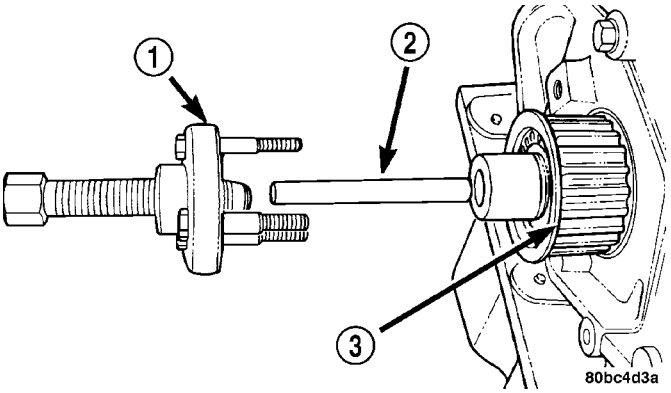

Fig. 85 Crankshaft Sprocket—Removal

1 - SPECIAL TOOL 6793
2 - SPECIAL TOOL C-4685–C2
3 - CRANKSHAFT SPROCKET

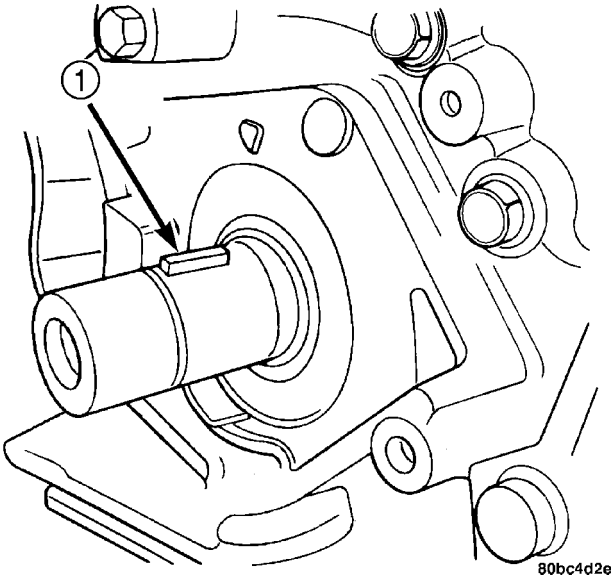

Fig. 86 Crankshaft Key

1 - CRANKSHAFT KEY

OIL PUMP (Continued)

(7) Remove oil pick-up tube.

(8) Remove oil pump (Fig. 87) and front crankshaft seal.

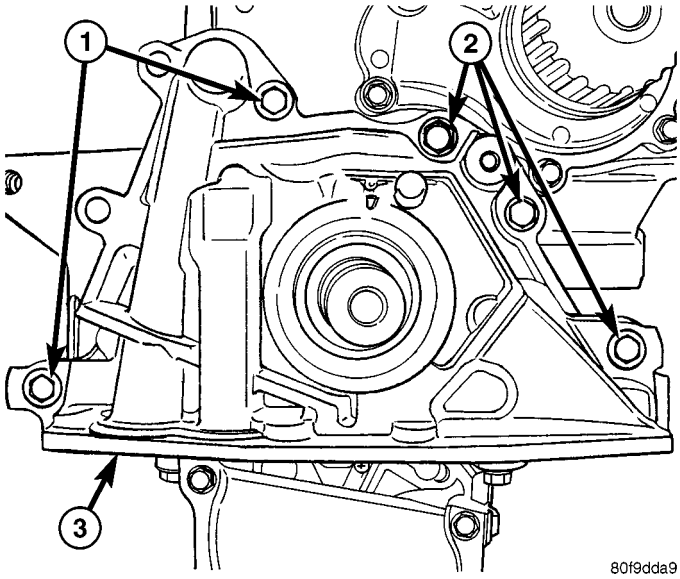

Fig. 87 Oil Pump

1 - BOLTS
2 - BOLTS
3 - OIL PUMP

DISASSEMBLY

(1) To remove the relief valve, proceed as follows:

(a) Remove the threaded plug and gasket from the oil pump (Fig. 88).

(b) Remove spring and relief valve (Fig. 88).

(2) Remove oil pump cover fasteners, and lift off cover (Fig. 89).

(3) Remove pump rotors (Fig. 89).

(4) Wash all parts in a suitable solvent and inspect carefully for damage or wear.

CLEANING

(1) Clean all parts thoroughly in a suitable solvent.

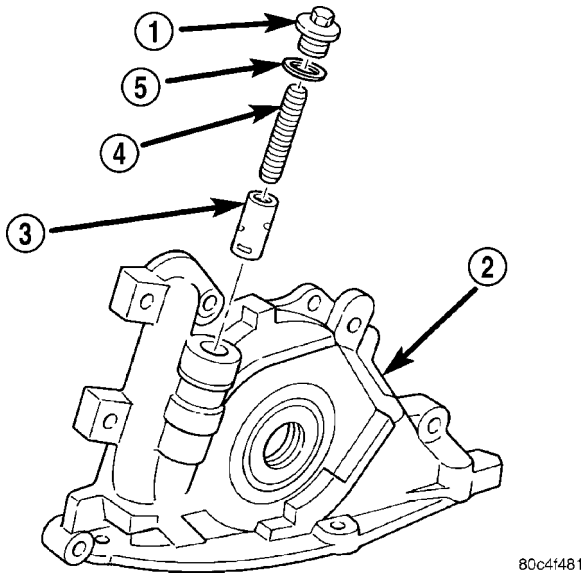

Fig. 88 Oil Pressure Relief Valve

1 - PLUG
2 - OIL PUMP BODY
3 - RELIEF VALVE
4 - SPRING
5 - SEAL

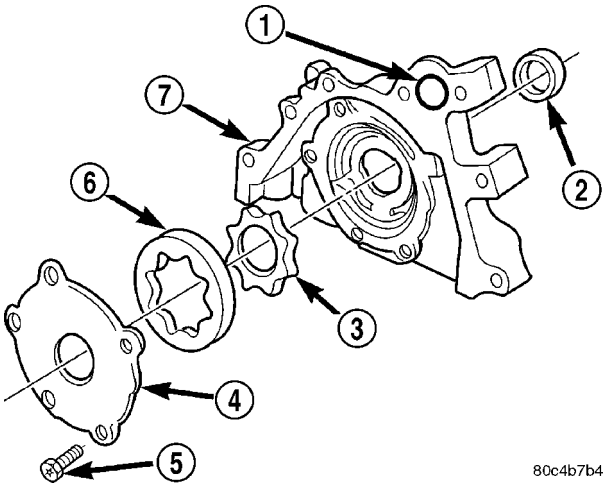

Fig. 89 Oil Pump

1 - O-RING
2 - SEAL
3 - INNER ROTOR
4 - OIL PUMP COVER
5 - FASTENER
6 - OUTER ROTOR
7 - OIL PUMP BODY

OIL PUMP (Continued)

INSPECTION

(1) Inspect the mating surface of the oil pump. Surface should be smooth (Fig. 90). Replace pump cover if scratched or grooved.

(2) Lay a straightedge across the pump cover surface (Fig. 91). If a 0.025 mm (0.001 in.) feeler gauge can be inserted between cover and straight edge, cover should be replaced.

(3) Measure thickness and diameter of outer rotor. If outer rotor thickness measures 9.40 mm (0.370 in.) or less (Fig. 92), or if the diameter is 79.95 mm (3.148 in.) or less, replace outer rotor.

(4) If inner rotor measures 9.40 mm (0.370 in.) or less replace inner rotor (Fig. 93).

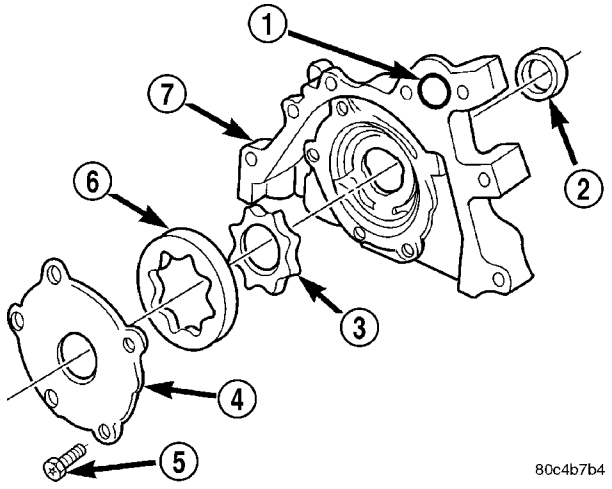

Fig. 90 Oil Pump

1 - O-RING
2 - SEAL
3 - INNER ROTOR
4 - OIL PUMP COVER
5 - FASTENER
6 - OUTER ROTOR
7 - OIL PUMP BODY

ASSEMBLY

(1) Assemble pump, using new parts as required. **Install the inner rotor with chamfer facing the cast iron oil pump cover.**

(2) Prime oil pump before installation by filling rotor cavity with engine oil.

(3) Install cover and tighten fasteners to 12 N·m (105 in. lbs.).

CAUTION: Oil pump pressure relief valve must be installed correctly or serious engine damage may occur.

(4) Install relief valve, spring, gasket and cap. Tighten cap to 41 N·m (30 ft. lbs.).

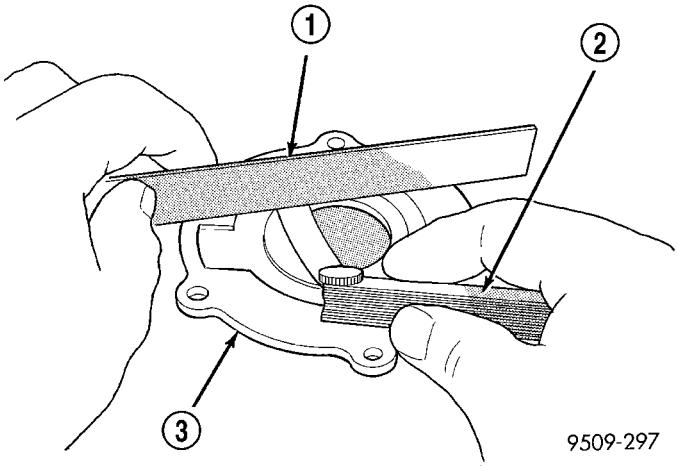

Fig. 91 Checking Oil Pump Cover Flatness

1 - STRAIGHT EDGE
2 - FEELER GAUGE
3 - OIL PUMP COVER

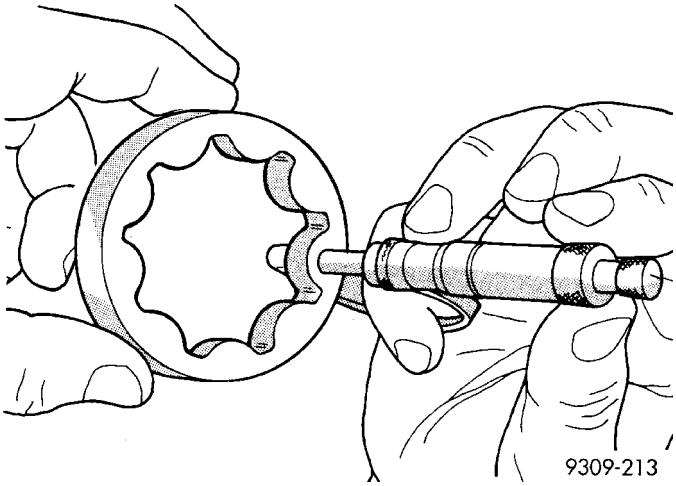

Fig. 92 Measuring Outer Rotor Thickness

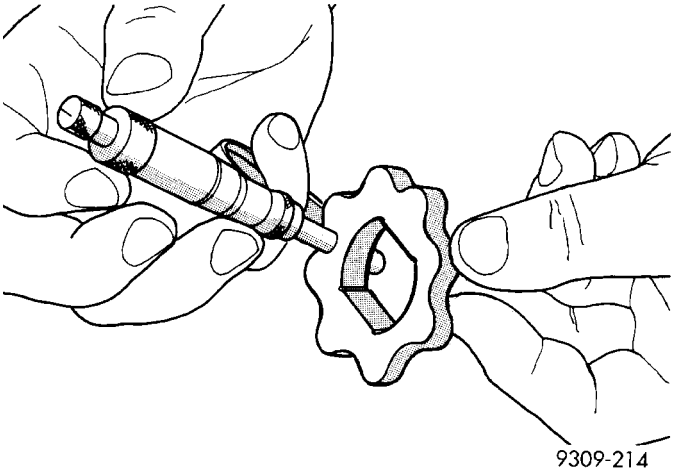

Fig. 93 Measuring Inner Rotor Thickness

OIL PUMP (Continued)

INSTALLATION

(1) Make sure all surfaces are clean and free of oil and dirt.

(2) Apply Mopar® Gasket Maker to oil pump as shown in (Fig. 94). Install O-ring into oil pump body discharge passage.

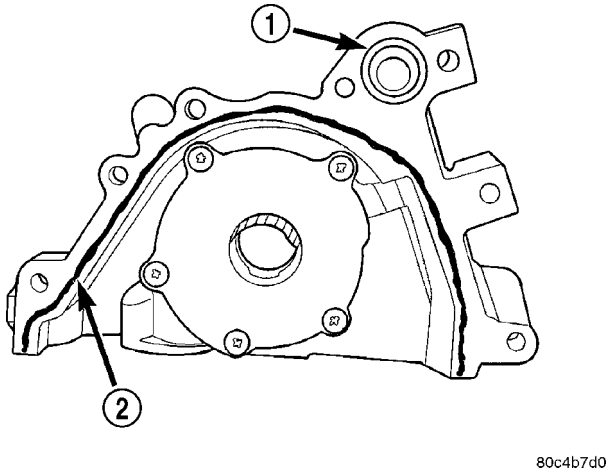

Fig. 94 Oil Pump Sealing - Typical

1 - O-RING
2 - SEALER LOCATION

(3) Prime oil pump with engine oil before installation.

(4) Align oil pump rotor flats with flats on crankshaft. Install the oil pump to the block.

CAUTION: To align, the front crankshaft seal MUST be out of pump, or damage may result.

(5) Install new front crankshaft seal using Special Tool 6780 (Fig. 95).

(6) Install crankshaft key (Fig. 83).

CAUTION: The crankshaft sprocket is set to a predetermined depth from the factory for correct timing belt tracking. If removed, use of Special Tool 6792 is required to set the sprocket to original installation depth. An incorrectly installed sprocket will result in timing belt and engine damage.

(7) Install crankshaft sprocket using Special Tool 6792 (Fig. 96).

(8) Install oil pump pick-up tube.

(9) Install oil pan. (Refer to 9 - ENGINE/LUBRICATION/OIL PAN - INSTALLATION)

(10) Install timing belt rear cover. (Refer to 9 - ENGINE/VALVE TIMING/TIMING BELT / CHAIN COVER(S) - INSTALLATION)

(11) Install timing belt. (Refer to 9 - ENGINE/VALVE TIMING/TIMING BELT/CHAIN AND SPROCKETS - INSTALLATION)

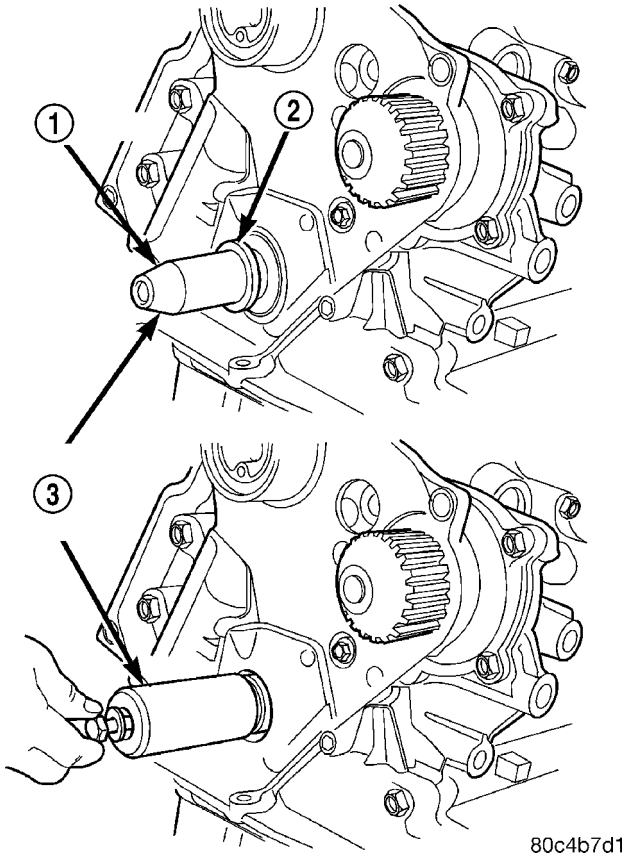

Fig. 95 Front Crankshaft Seal - Installation

1 - PROTECTOR
2 - SEAL
3 - SPECIAL TOOL 6780

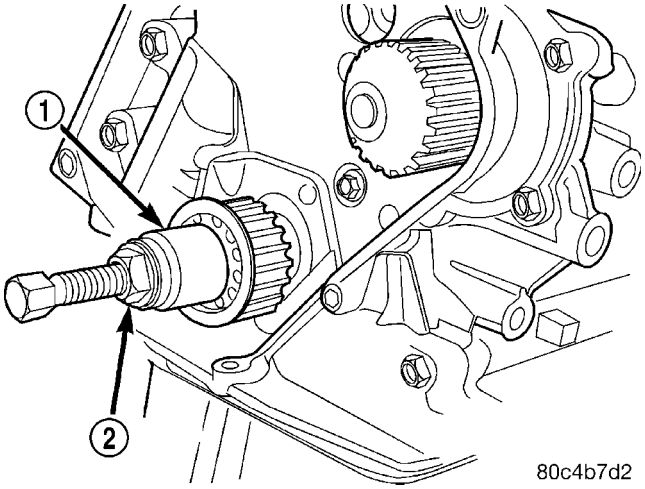

Fig. 96 Crankshaft Sprocket - Installation

1 - SPECIAL TOOL 6792
2 - TIGHTEN NUT TO INSTALL

INTAKE MANIFOLD

DESCRIPTION

The intake manifold is a two piece aluminum casting (Fig. 97) that attaches to the cylinder head with fasteners. The manifold is a long branch design to enhance low and mid-range torque

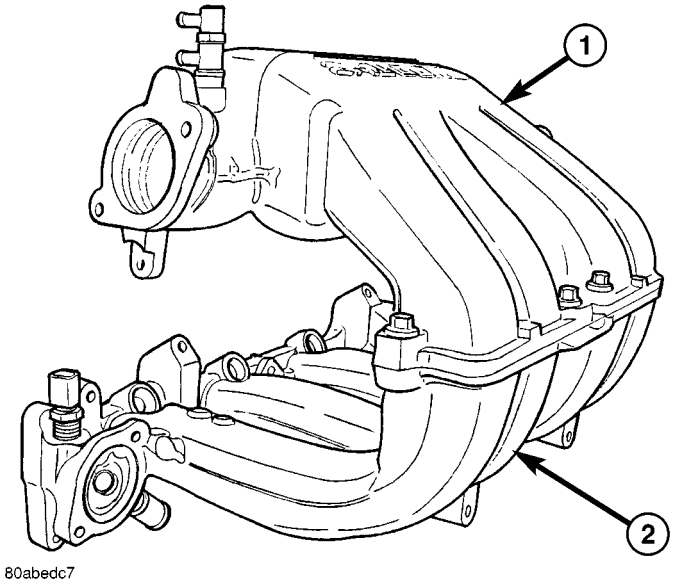

Fig. 97 Intake Manifold - Upper and Lower

1 - UPPER INTAKE MANIFOLD
2 - LOWER INTAKE MANIFOLD

OPERATION

The intake manifold delivers air to the combustion chambers. This air allows the fuel delivered by the fuel injectors to ignite when the spark plug fire.

DIAGNOSIS AND TESTING

INTAKE MANIFOLD LEAKS

An intake manifold air leak is characterized by lower than normal manifold vacuum. Also, one or more cylinders may not be functioning.

WARNING: USE EXTREME CAUTION WHEN THE ENGINE IS OPERATING. DO NOT STAND IN A DIRECT LINE WITH THE FAN. DO NOT PUT YOUR HANDS NEAR THE PULLEYS, BELTS OR THE FAN. DO NOT WEAR LOOSE CLOTHING.

(1) Start the engine.
(2) Spray a small stream of water (Spray Bottle) at the suspected leak area.
(3) If engine RPM'S change, the area of the suspected leak has been found.
(4) Repair as required.

REMOVAL

REMOVAL

(1) Disconnect negative cable from battery.
(2) Disconnect connector from inlet air temperature sensor.
(3) Disconnect air intake tube at throttle body and remove upper air cleaner housing.
(4) Disconnect connector from throttle position sensor (TPS).
(5) Disconnect connector from idle air control (IAC) motor.
(6) Disconnect connector from MAP sensor.
(7) Remove vacuum lines for purge solenoid and PCV valve at intake manifold.
(8) Remove vacuum lines for power brake booster, LDP, EGR transducer, and speed control vacuum reservoir (if equipped) at upper intake manifold fittings.
(9) Disconnect throttle, speed control (if equipped), and transaxle control (if equipped) and cables from throttle lever and bracket. (Refer to 14 - FUEL SYSTEM/FUEL INJECTION/THROTTLE CONTROL CABLE - REMOVAL).
(10) Perform fuel system pressure release procedure **before attempting any repairs.** (Refer to 14 - FUEL SYSTEM/FUEL DELIVERY - STANDARD PROCEDURE).
(11) Disconnect fuel line (Refer to 14 - FUEL SYSTEM/FUEL DELIVERY/QUICK CONNECT FITTING - STANDARD PROCEDURE).
(12) Disconnect coolant temperature sensor/fuel injector wire harness connector.
(13) Disconnect fuel injector harness.
(14) Remove intake manifold to cylinder head fasteners.
(15) Remove the manifold from engine.

CAUTION: Cover intake manifold openings to prevent foreign material from entering engine.

(16) Inspect the manifold (Refer to 9 - ENGINE/MANIFOLDS/INTAKE MANIFOLD - INSPECTION).

REMOVAL — LOWER

(1) Disconnect negative cable from battery.
(2) Disconnect connector from inlet air temperature sensor.
(3) Disconnect air intake tube at throttle body and remove upper air cleaner housing.
(4) Disconnect connector from throttle position sensor (TPS).
(5) Disconnect connector from idle air control (IAC) motor.
(6) Disconnect connector from MAP sensor.
(7) Remove vacuum lines for purge solenoid and PCV valve at intake manifold.

INTAKE MANIFOLD (Continued)

(8) Remove vacuum lines for power brake booster, LDP, EGR transducer, and speed control vacuum reservoir (if equipped) at intake manifold fittings.

(9) Disconnect throttle, speed control (if equipped), and transaxle control (if equipped) and cables from throttle lever and bracket. (Refer to 14 - FUEL SYSTEM/FUEL INJECTION/THROTTLE CONTROL CABLE - REMOVAL)

(10) Perform fuel system pressure release procedure **before attempting any repairs.** (Refer to 14 - FUEL SYSTEM/FUEL DELIVERY - STANDARD PROCEDURE).

(11) Disconnect fuel line. (Refer to 14 - FUEL SYSTEM/FUEL DELIVERY/QUICK CONNECT FITTING - STANDARD PROCEDURE).

(12) Disconnect coolant temperature sensor/fuel injector wire harness connector.

(13) Disconnect fuel injector harness.

(14) Remove intake manifold to cylinder head fasteners.

(15) Remove the manifold from engine.

CAUTION: Cover intake manifold openings to prevent foreign material from entering engine.

(16) Inspect the manifold. (Refer to 9 - ENGINE/MANIFOLDS/INTAKE MANIFOLD - INSPECTION).

INSPECTION

(1) Check manifold surfaces for flatness with straight edge. Surface must be flat within 0.15 mm per 300 mm (0.006 in. per foot) of manifold length.

(2) Inspect manifold for cracks or distortion. Replace manifold if necessary.

INSTALLATION

INSTALLATION — UPPER

(1) Clean manifold sealing surfaces.

(2) Apply a 1.5 mm (0.060 in.) bead Mopar® Gasket Maker to the perimeter of the lower intake manifold runner openings.

(3) Install upper intake manifold and tighten fasteners to 28 N·m (250 in. lbs.) in sequence shown in (Fig. 98). Repeat this procedures until all fasteners are at specified torque.

(4) Install engine oil dipstick.

(5) Install upper bolt in intake manifold to front support bracket.

(6) Install EGR tube.

(7) Install throttle cables in bracket.

(8) Connect throttle, speed control, (if equipped), cables to throttle lever.

(9) Connect vacuum lines for power brake booster, LDP, EGR transducer, and speed control vacuum reservoir (if equipped) at upper intake manifold fittings.

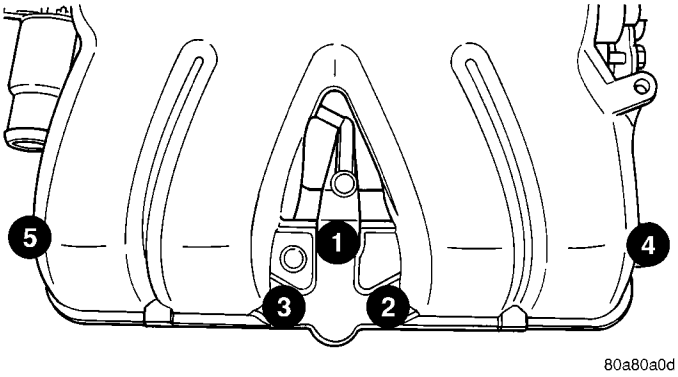

Fig. 98 Upper Intake Manifold Tightening Sequence - 2.4L

(10) Connect vacuum lines for purge solenoid and PCV valve.

(11) Connect electrical connectors for MAP sensor, throttle position sensor (TPS), and idle air control (IAC) motor.

(12) Install air cleaner upper housing and air intake tube to throttle body.

(13) Connect inlet air temperature sensor connector.

(14) Connect negative cable to battery.

INSTALLATION — LOWER

If the following items were removed, install and torque to specifications:

- Fuel rail bolts - 22 N·m (200 in. lbs.)
- Coolant outlet connector bolts - 28 N·m (250 in. lbs.)
- Coolant temperature sensor - 7 N·m (60 in. lbs.)

(1) Position a new gasket on cylinder head and install lower manifold.

(2) Install and tighten intake manifold fasteners to 28 N·m (250 in. lbs.) in the sequence shown in (Fig. 99). Repeat procedure until all bolts are at specified torque.

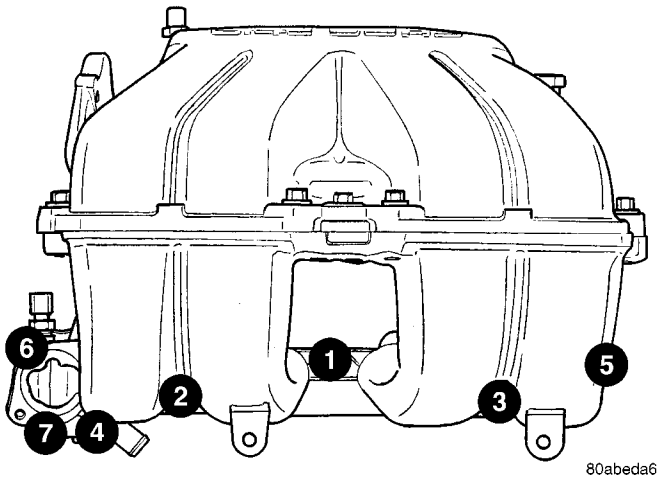

Fig. 99 Lower Intake Manifold Tightening Sequence

INTAKE MANIFOLD (Continued)

(3) Install lower intake manifold support bracket bolts.

- Bolts to intake 28 N·m (250 in. lbs.)
- Bolt to engine block 54 N·m (40 ft. lbs.)

(4) Connect the fuel line. (Refer to 14 - FUEL SYSTEM/FUEL DELIVERY/QUICK CONNECT FITTING - STANDARD PROCEDURE).

(5) Connect coolant temperature sensor/fuel injector wiring harness electrical connector.

(6) Install the radiator upper and heater supply hoses.

(7) Install the upper intake manifold. (Refer to 9 - ENGINE/MANIFOLDS/INTAKE MANIFOLD - INSTALLATION).

(8) Fill the cooling system. (Refer to 7 - COOLING - STANDARD PROCEDURE).

EXHAUST MANIFOLD

DESCRIPTION

The exhaust manifold is made of Hi-Silicone Moly nodular cast iron for strength and high temperatures. The manifold attaches to the cylinder head.

OPERATION

The exhaust manifold collects the exhaust gasses exiting the combustion chambers. Then it channels the exhaust gasses to the exhaust pipe attached to the manifold.

REMOVAL

(1) Raise vehicle and disconnect exhaust pipe from the exhaust manifold.

(2) Lower the vehicle.

(3) Disconnect upstream oxygen sensor connector at the rear of exhaust manifold.

(4) Remove the air cleaner bracket (Fig. 100).

(5) Remove the heat shield.

(6) Remove the bolts attaching the manifold to the cylinder head.

(7) Remove exhaust manifold.

(8) Inspect the manifold. (Refer to 9 - ENGINE/MANIFOLDS/EXHAUST MANIFOLD - INSPECTION)

CLEANING

(1) Discard gasket (if equipped) and clean all surfaces of manifold and cylinder head.

INSPECTION

(1) Inspect manifold gasket surfaces for flatness with straight edge. Surface must be flat within 0.15 mm per 300 mm (0.006 in. per foot) of manifold length.

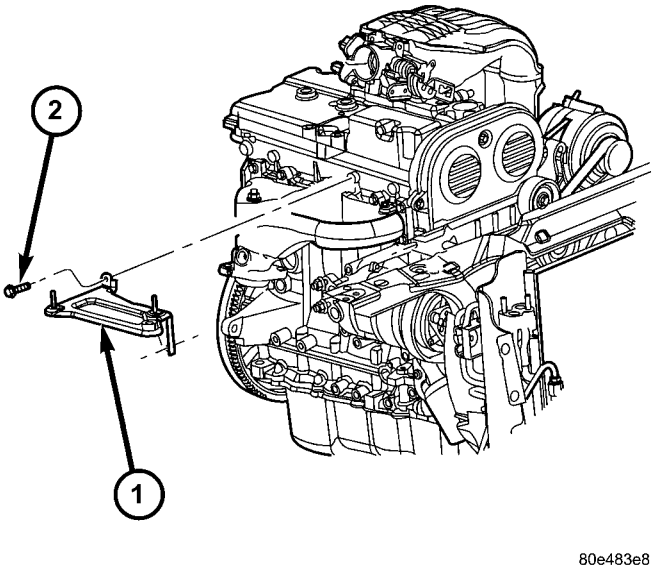

Fig. 100 AIR CLEANER BRACKET

1 - AIR CLEANER BRACKET
2 - BOLT (2)

(2) Inspect manifolds for cracks or distortion. Replace manifold as necessary.

INSTALLATION

(1) Clean the manifold mating surfaces.

(2) Install exhaust manifold with a new gasket. Tighten attaching nuts to 20 N·m (175 in. lbs.).

(3) Attach exhaust pipe to exhaust manifold and tighten fasteners to 37 N·m (27 ft. lbs.).

(4) Install and connect the oxygen sensor. (Refer to 14 - FUEL SYSTEM/FUEL INJECTION/O2 SENSOR - COMPONENT LOCATION)

(5) Install the heat shield.

(6) Install the air cleaner bracket.

TIMING BELT COVER(S)

REMOVAL

FRONT COVER

(1) Remove crankshaft vibration damper. (Refer to 9 - ENGINE/ENGINE BLOCK/VIBRATION DAMPER - REMOVAL)

(2) Remove generator drive belt tensioner assembly. (Refer to 7 - COOLING/ACCESSORY DRIVE/BELT TENSIONERS - REMOVAL)

(3) Remove timing belt front cover bolts, and remove covers.

TIMING BELT COVER(S) (Continued)

REAR COVER

(1) Remove front covers.

(2) Remove timing belt. (Refer to 9 - ENGINE/ VALVE TIMING/TIMING BELT/CHAIN AND SPROCKETS - REMOVAL)

(3) Hold camshaft sprocket with Special Tool 6847 while removing center bolt.

(4) Remove timing belt idler pulley.

(5) Remove rear cover fasteners and remove cover from engine.

INSTALLATION

REAR COVER

(1) Install timing belt rear cover and bolts (Fig. 101).

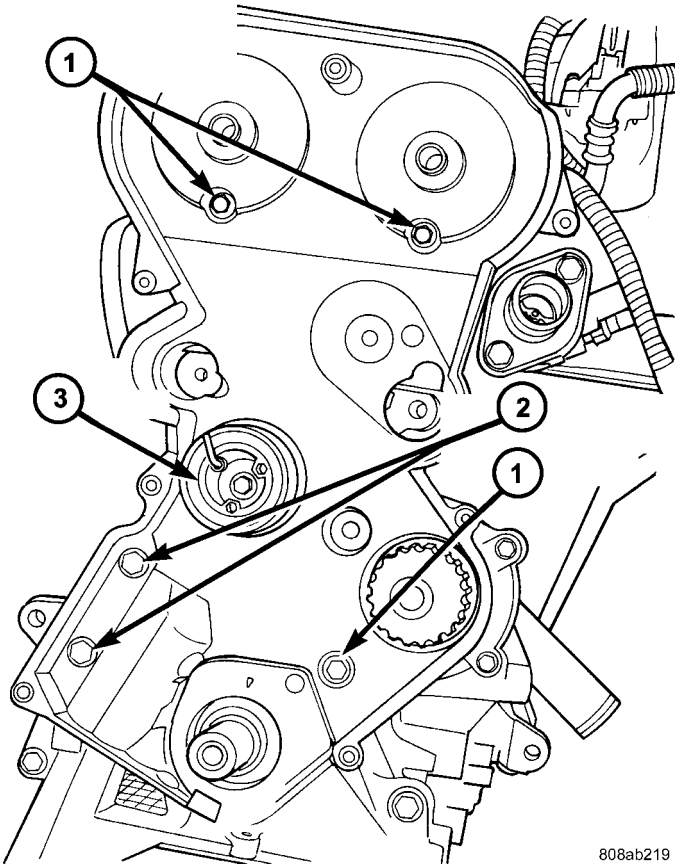

Fig. 101 Timing Belt Rear Cover

1 - REAR COVER TO CYLINDER HEAD FASTENERS
2 - REAR COVER TO ENGINE BLOCK FASTENERS
3 - BELT TENSIONER

CAUTION: Do not use an impact wrench for tightening camshaft sprocket bolt. Damage to the timing locating pin can occur. Hand tighten using a wrench ONLY.

(2) Install camshaft sprockets. Hold sprockets with Special Tool 6848 and tighten center bolt to 101 N·m (75 ft. lbs.).

(3) Install timing belt idler pulley and tighten mounting bolt to 61 N·m (45 ft. lbs.).

(4) Install timing belt. (Refer to 9 - ENGINE/ VALVE TIMING/TIMING BELT/CHAIN AND SPROCKETS - INSTALLATION)

(5) Install front covers.

FRONT COVER

(1) Install timing belt front covers. Tighten fasteners to 7 N·m (60 in. lbs.).

(2) Install generator drive belt tensioner. (Refer to 7 - COOLING/ACCESSORY DRIVE/BELT TENSIONERS - INSTALLATION)

(3) Install crankshaft vibration damper. (Refer to 9 - ENGINE/ENGINE BLOCK/VIBRATION DAMPER - INSTALLATION)

TIMING BELT AND SPROCKET(S)

REMOVAL

TIMING BELT

(1) Remove air cleaner upper cover, housing, and clean air tube.

(2) Raise vehicle on hoist.

(3) Remove accessory drive belts. (Refer to 7 - COOLING/ACCESSORY DRIVE/BELT TENSIONERS - REMOVAL)

(4) Remove crankshaft vibration damper. (Refer to 9 - ENGINE/ENGINE BLOCK/VIBRATION DAMPER - REMOVAL)

(5) Remove air conditioner/generator belt tensioner and pulley assembly. (Refer to 7 - COOLING/ACCESSORY DRIVE/BELT TENSIONERS - REMOVAL)

(6) Remove timing belt lower front cover bolts and remove cover. (Refer to 9 - ENGINE/VALVE TIMING/ TIMING BELT / CHAIN COVER(S) - REMOVAL)

(7) Lower vehicle.

(8) Remove bolts attaching timing belt upper front cover and remove cover. (Refer to 9 - ENGINE/ VALVE TIMING/TIMING BELT / CHAIN COVER(S) - REMOVAL)

CAUTION: When aligning crankshaft and camshaft timing marks always rotate engine from crankshaft. Camshaft should not be rotated after timing belt is removed. Damage to valve components may occur. Always align timing marks before removing timing belt.

TIMING BELT AND SPROCKET(S) (Continued)

(9) Before the removal of the timing belt, rotate crankshaft until the TDC mark on oil pump housing aligns with the TDC mark on crankshaft sprocket (trailing edge of sprocket tooth) (Fig. 102).

NOTE: The crankshaft sprocket TDC mark is located on the trailing edge of the sprocket tooth. Failure to align trailing edge of sprocket tooth to TDC mark on oil pump housing will cause the camshaft timing marks to be misaligned.

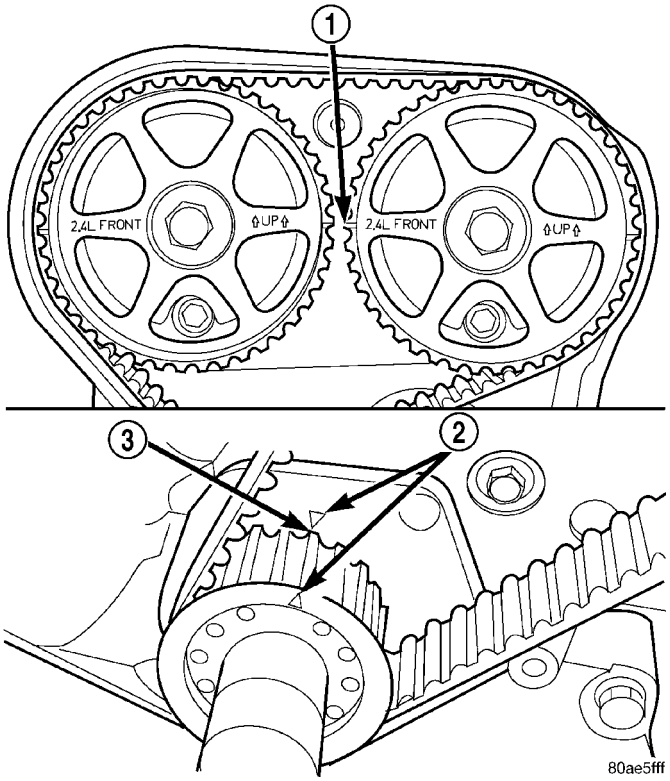

Fig. 102 Crankshaft and Camshaft Timing

1 - CAMSHAFT TIMING MARKS
2 - CRANKSHAFT TDC MARKS
3 - TRAILING EDGE OF SPROCKET TOOTH

(10) Install 6 mm Allen wrench into belt tensioner. Before rotating the tensioner, insert the long end of a 1/8” or 3 mm Allen wrench into the pin hole on the front of the tensioner (Fig. 103). While rotating the tensioner counterclockwise, push in lightly on the 1/8” or 3 mm Allen wrench, until it slides into the locking hole.

(11) Remove timing belt.

CRANKSHAFT SPROCKET

(1) Disconnect negative battery cable.

(2) Remove timing belt (Refer to 9 - ENGINE/ VALVE TIMING/TIMING BELT/CHAIN AND SPROCKETS - REMOVAL).

(3) Remove crankshaft sprocket using Special Tools 6793 and insert C-4685-C2 (Fig. 104).

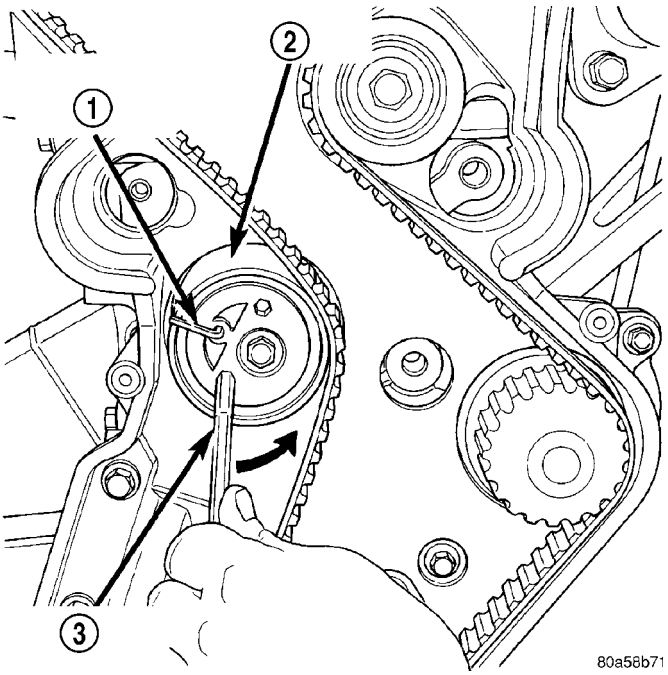

Fig. 103 Locking Timing Tensioner

1 - 1/8 OR 3mm ALLEN WRENCH
2 - BELT TENSIONER
3 - 6mm ALLEN WRENCH

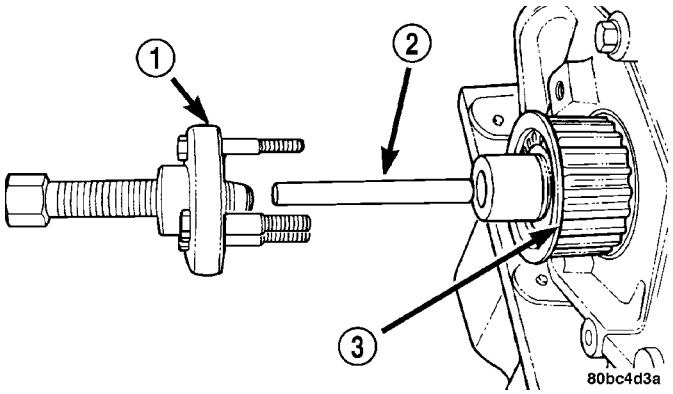

Fig. 104 Crankshaft Sprocket - Removal

1 - SPECIAL TOOL 6793
2 - SPECIAL TOOL C-4685–C2
3 - CRANKSHAFT SPROCKET

CLEANING

Do Not attempt to clean a timing belt. If contamination from oil, grease, or coolants have occurred, the timing belt should be replaced.

Clean all sprockets using a suitable solvent. Clean all sprocket grooves of any debris.

TIMING BELT AND SPROCKET(S) (Continued)

INSTALLATION

CRANKSHAFT SPROCKET

CAUTION: The crankshaft sprocket is set to a predetermined depth from the factory for correct timing belt tracking. If removed, use of Special Tool 6792 is required to set the sprocket to original installation depth. An incorrectly installed sprocket will result in timing belt and engine damage.

(1) Install crankshaft sprocket using Special Tool 6792 (Fig. 105).

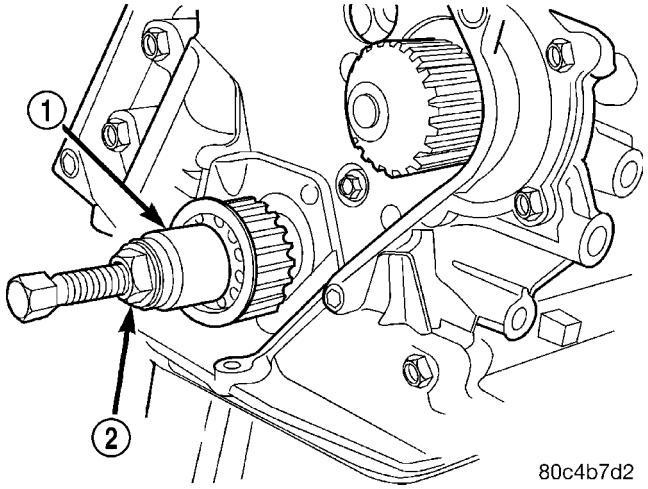

Fig. 105 Crankshaft Sprocket - Installation

1 - SPECIAL TOOL 6792
2 - TIGHTEN NUT TO INSTALL

(2) Install timing belt. (Refer to 9 - ENGINE/VALVE TIMING/TIMING BELT/CHAIN AND SPROCKETS - INSTALLATION)

TIMING BELT

CAUTION: The crankshaft sprocket is set to a predetermined depth from the factory for correct timing belt tracking. If removed, use of Special Tool 6792 is required to set the sprocket to original installation depth. An incorrectly installed sprocket will result in timing belt and engine damage.

(1) Set crankshaft sprocket to TDC by aligning the sprocket with the arrow on the oil pump housing.

(2) Set camshafts timing marks so that the exhaust camshaft sprocket is a 1/2 notch below the intake camshaft sprocket (Fig. 106).

CAUTION: Ensure that the arrows on both camshaft sprockets are facing up.

(3) Install timing belt. Starting at the crankshaft, go around the water pump sprocket, idler pulley, camshaft sprockets and then around the tensioner (Fig. 107).

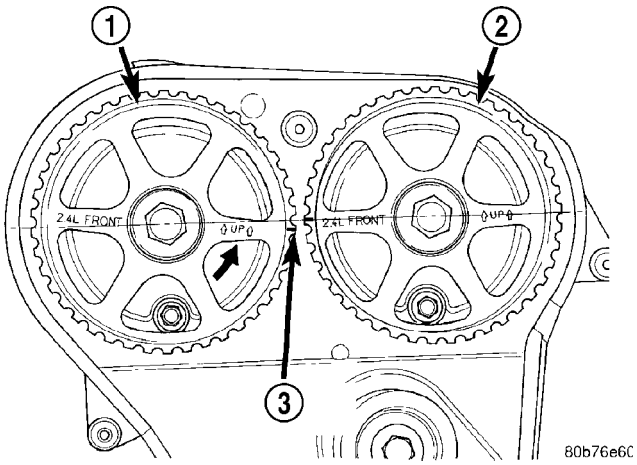

Fig. 106 Camshaft Sprocket Alignment

1 - CAMSHAFT SPROCKET-EXHAUST
2 - CAMSHAFT SPROCKET-INTAKE
3 - 1/2 NOTCH LOCATION

(4) Move the exhaust camshaft sprocket counterclockwise (Fig. 107) to align marks and take up belt slack.

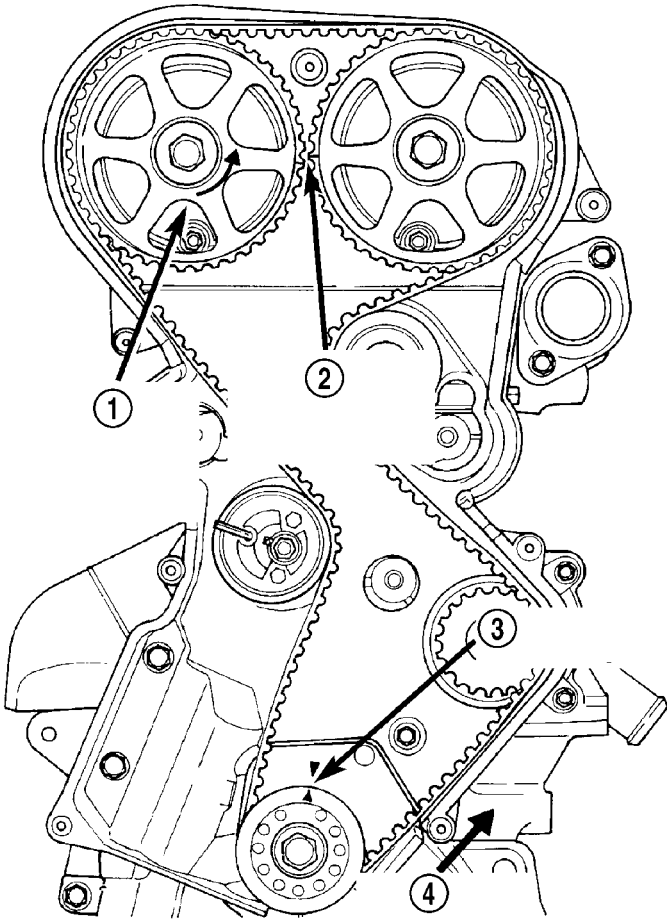

Fig. 107 Timing Belt - Installation - Typical

1 - ROTATE CAMSHAFT SPROCKET TO TAKE UP BELT SLACK
2 - CAMSHAFT TIMING MARKS 1/2 NOTCH LOCATION
3 - CRANKSHAFT AT TDC
4 - INSTALL BELT IN THIS DIRECTION

TIMING BELT AND SPROCKET(S) (Continued)

(5) Insert a 6 mm Allen wrench into the hexagon opening located on the top plate of the belt tensioner pulley. Rotate the top plate **COUNTERCLOCKWISE** . The tensioner pulley will move against the belt and the tensioner setting notch will eventually start to move clockwise. Watching the movement of the setting notch, continue rotating the top plate counterclockwise until the setting notch is aligned with the spring tang (Fig. 108). Using the allen wrench to prevent the top plate from moving, torque the tensioner lock nut to 30 N·m (22 ft. lbs.). Setting notch and spring tang should remain aligned after lock nut is torqued.

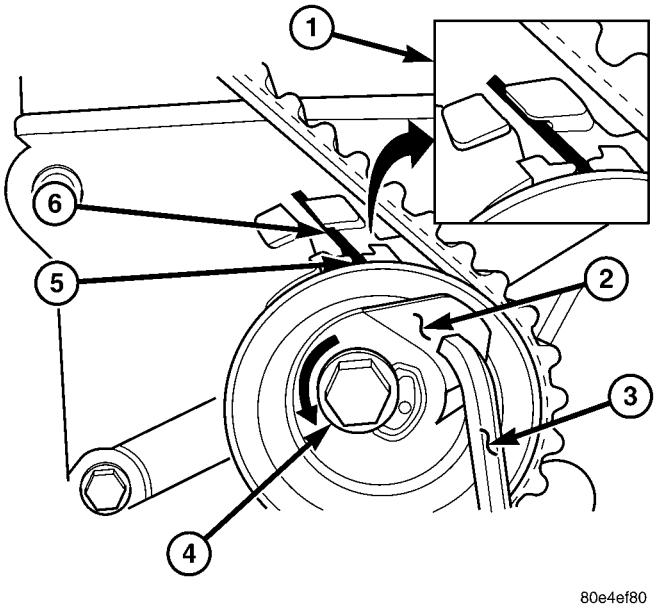

Fig. 108 Timing Belt Tension Adjustment

1 - ALIGN SETTING NOTCH WITH SPRING TANG
2 - TOP PLATE
3 - 6mm ALLEN WRENCH
4 - LOCK NUT
5 - SETTING NOTCH
6 - SPRING TANG

(6) Remove allen wrench and torque wrench.

NOTE: Repositioning the crankshaft to the TDC position must be done only during the CLOCKWISE rotation movement. If TDC is missed, rotate a further two revolutions until TDC is achieved. DO NOT rotate crankshaft counterclockwise as this will make verification of proper tensioner setting impossible.

(7) Once the timing belt has been installed and tensioner adjusted, rotate the crankshaft CLOCKWISE two complete revolutions manually for seating of the belt, until the crankshaft is repositioned at the TDC position. Verify that the camshaft and crankshaft timing marks are in proper position (Fig. 109).

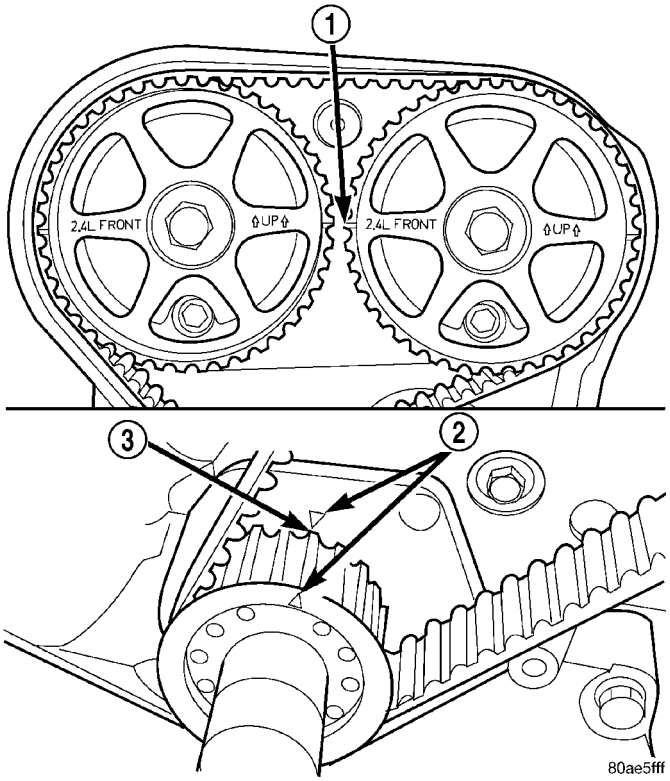

Fig. 109 Crankshaft and Camshaft Timing

1 - CAMSHAFT TIMING MARKS
2 - CRANKSHAFT TDC MARKS
3 - TRAILING EDGE OF SPROCKET TOOTH

TIMING BELT AND SPROCKET(S) (Continued)

(8) Check if the spring tang is within the tolerance window (Fig. 110). If the spring tang is within the tolerance window, the installation process is complete and nothing further is required. If the spring tang is not within the tolerance window, repeat Steps 5 through 7.

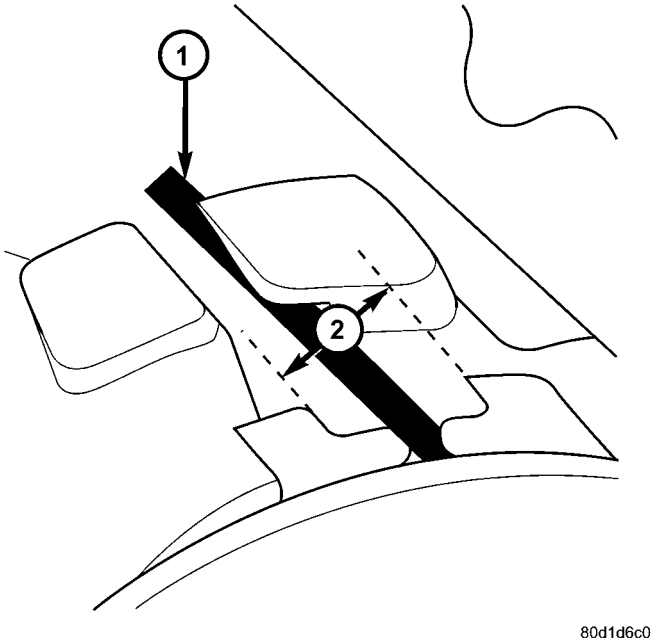

Fig. 110 Timing Belt Tension Verification

1 - SPRING TANG
2 - TOLERANCE WINDOW

(9) Install timing belt front covers and bolts. (Refer to 9 - ENGINE/VALVE TIMING/TIMING BELT / CHAIN COVER(S) - INSTALLATION)

(10) Install air conditioning/generator belt tensioner and pulley. (Refer to 7 - COOLING/ACCESSORY DRIVE/BELT TENSIONERS - INSTALLATION)

(11) Install crankshaft vibration damper. (Refer to 9 - ENGINE/ENGINE BLOCK/VIBRATION DAMPER - INSTALLATION)

(12) Install accessory drive belts. (Refer to 7 - COOLING/ACCESSORY DRIVE/DRIVE BELTS - INSTALLATION)

(13) Install drive belt splash shield.

(14) Install air cleaner housing, upper cover, and clean air tube.

TIMING BELT TENSIONER & PULLEY

REMOVAL

(1) Remove the timing belt. (Refer to 9 - ENGINE/VALVE TIMING/TIMING BELT/CHAIN AND SPROCKETS - REMOVAL)

(2) Remove timing belt idler pulley.

(3) Hold camshaft sprocket with Special Tool 6847 while removing bolt (Fig. 111). Remove both cam sprockets.

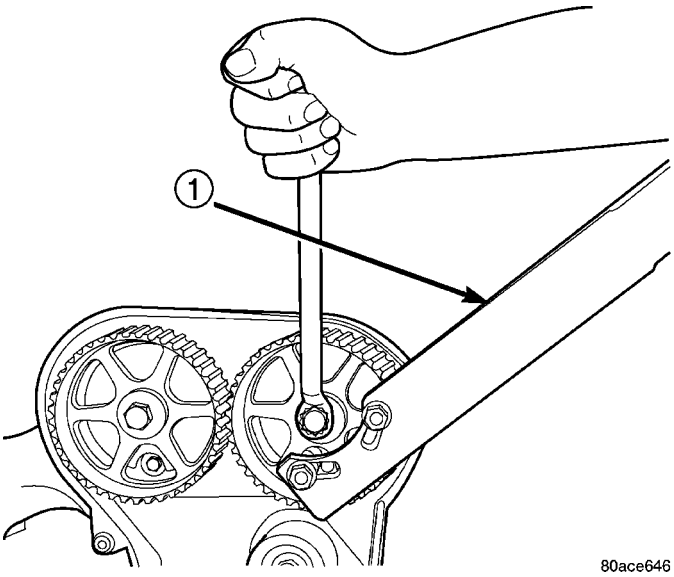

Fig. 111 Camshaft Sprocket - Removal/Installation

1 - SPECIAL TOOL 6847

(4) Remove rear timing belt cover fasteners and remove cover from engine.

(5) Remove lower bolt attaching timing belt tensioner assembly to engine and remove tensioner **as an assembly**.

INSTALLATION

(1) Align timing belt tensioner assembly to engine and install lower mounting bolt **but do not tighten**. To properly align tensioner assembly—install one of the engine bracket mounting bolts (M10) 5 to 7 turns into the tensioner's upper mounting location.

(2) Torque the tensioner's lower mounting bolt to 61 N·m (45 ft. lbs.). Remove the upper bolt used for tensioner alignment.

(3) Install rear timing belt cover and fasteners.

(4) Install timing belt idler pulley and torque mounting bolt to 61 N·m (45 ft. lbs.).

(5) Install camshaft sprockets. Use Special Tool 6847 to hold sprockets, torque bolts to 101 N·m (75 ft. lbs.).

TIMING BELT TENSIONER & PULLEY (Continued)

(6) Install the timing belt. (Refer to 9 - ENGINE/ VALVE TIMING/TIMING BELT/CHAIN AND SPROCKETS - INSTALLATION)

BALANCE SHAFTS AND CARRIER ASSEMBLY

DESCRIPTION

The 2.4L engine is equipped with two nodular cast iron balance shafts installed in a cast aluminum carrier attached to the lower cylinder block (Fig. 112).

OPERATION

The balance shafts are driven by the crankshaft via a roller chain and sprockets. The balance shafts are connected by helical gears. The dual counter rotating shafts decrease second order vertical shaking forces caused by component movement.

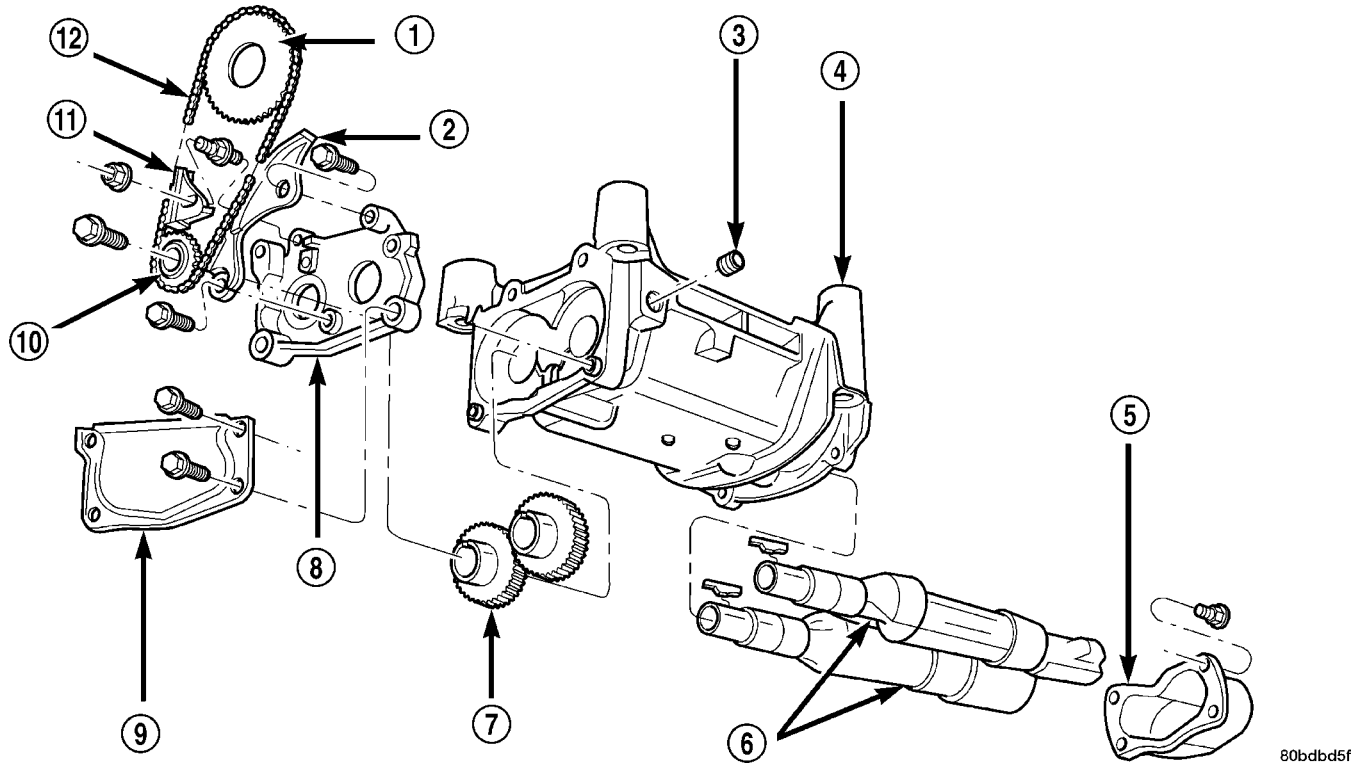

Fig. 112 Balance Shafts and Carrier Assembly

1 - SPROCKET
2 - TENSIONER
3 - PLUG
4 - CARRIER
5 - REAR COVER
6 - BALANCE SHAFTS
7 - GEARS
8 - GEAR COVER
9 - CHAIN COVER
10 - SPROCKET
11 - GUIDE
12 - CHAIN

BALANCE SHAFTS AND CARRIER ASSEMBLY (Continued)

REMOVAL

BALANCE SHAFTS

(1) Drain engine oil.

(2) Remove the oil pan. (Refer to 9 - ENGINE/LUBRICATION/OIL PAN - REMOVAL)

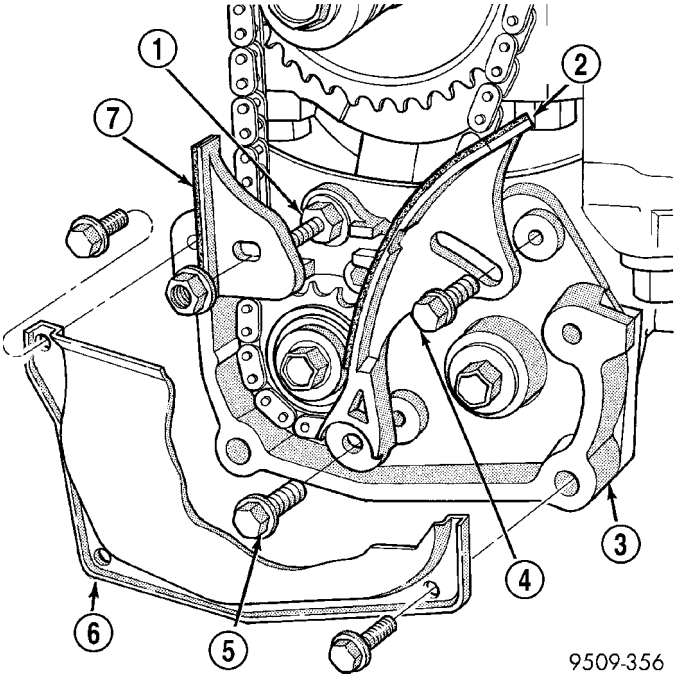

Fig. 113 Chain Cover, Guide and Tensioner

1 - STUD
2 - TENSIONER (ADJUSTER)
3 - GEAR COVER
4 - ADJUST SCREW
5 - PIVOT SCREW
6 - CHAIN COVER (CUTAWAY)
7 - GUIDE

(3) Remove chain cover, guide and tensioner (Fig. 113). Also see Carrier Assembly Removal for service procedures requiring only temporary relocation of assembly.

(4) Remove gear cover retaining stud (double ended to also retain chain guide). Remove cover and balance shaft gears (Fig. 113).

(5) Remove balance shaft gear, chain sprocket retaining screws, and crankshaft chain sprocket. Remove chain and sprocket assembly (Fig. 114). Using two wide pry bars, work the sprocket back and forth until it is off the shaft.

(6) Remove carrier gear cover and balance shafts (Fig. 115).

(7) Remove four carrier to crankcase attaching bolts to separate carrier from engine bedplate.

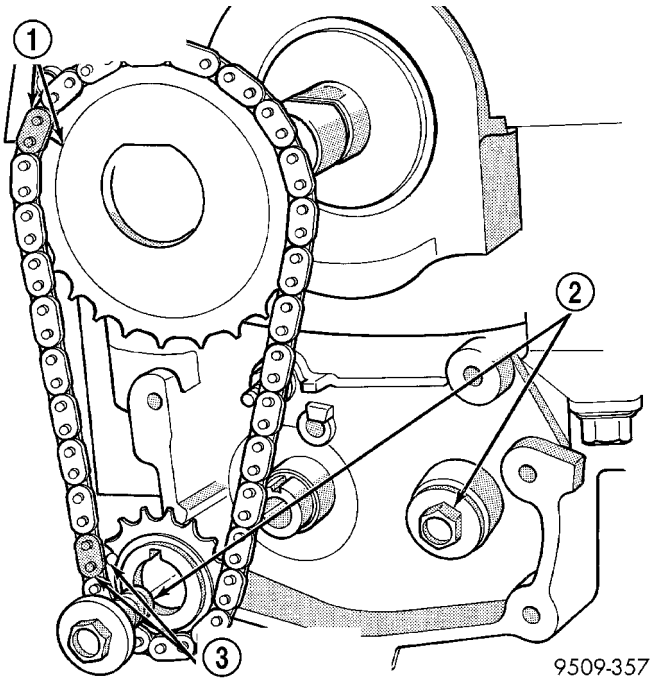

Fig. 114 Drive Chain and Sprockets

1 - NICKEL PLATED LINK AND MARK
2 - GEAR/SPROCKET SCREWS
3 - NICKEL PLATED LINK AND DOT

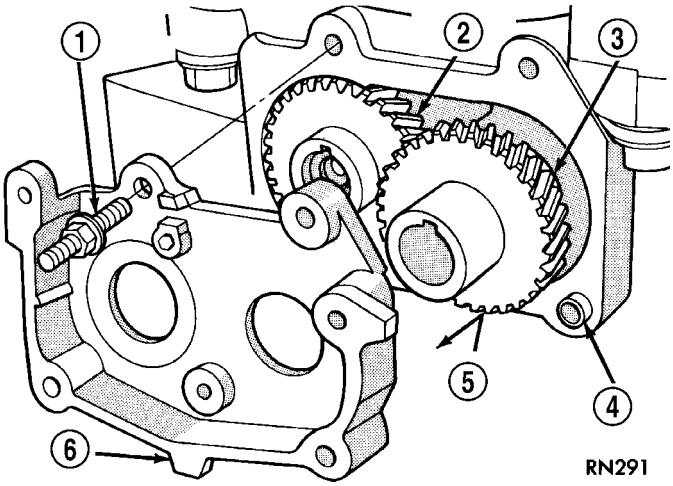

Fig. 115 Gear Cover and Gears

1 - STUD (DOUBLE ENDED)
2 - DRIVE GEAR
3 - DRIVEN GEAR
4 - CARRIER DOWEL
5 - GEAR(S)
6 - GEAR COVER

BALANCE SHAFTS AND CARRIER ASSEMBLY (Continued)

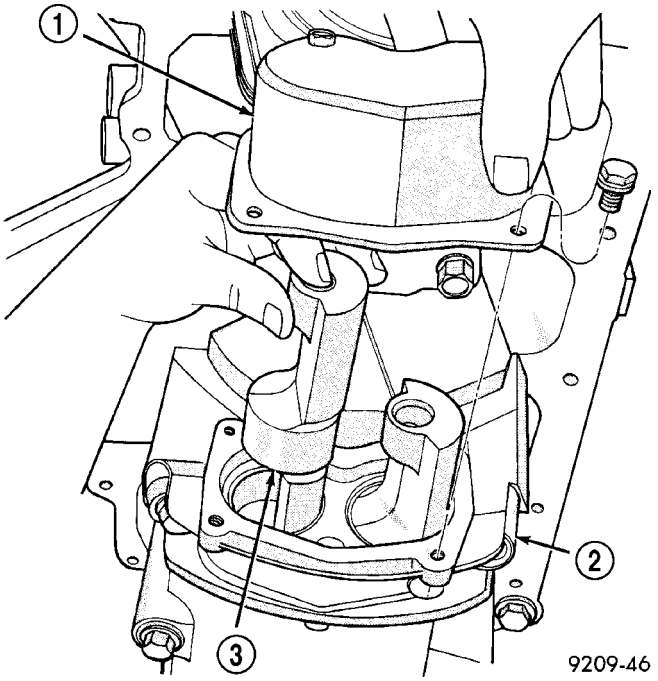

Fig. 116 Balance Shaft - Removal/Installation

1 - REAR COVER
2 - CARRIER
3 - BALANCE SHAFT

BALANCE SHAFT CARRIER

The following components will remain intact during carrier removal. Gear cover, gears, balance shafts and the rear cover (Fig. 116).

(1) Remove chain cover and driven balance shaft chain sprocket screw.

(2) Loosen tensioner pivot and adjusting screws, move driven balance shaft inboard through driven chain sprocket. Sprocket will hang in lower chain loop.

(3) Remove carrier to crankcase attaching bolts to remove carrier.

INSTALLATION

BALANCE SHAFT TIMING

BALANCE SHAFT INSTALLATION

Balance shaft and carrier assembly installation is the reverse of the removal procedure. **During installation crankshaft-to-balance shaft timing must be established. Refer to Timing procedure in this section.**

(1) With balance shafts installed in carrier (Fig. 116) position carrier on crankcase and install four attaching bolts and tighten to 54 N·m (40 ft. lbs.).

(2) Turn balance shafts until both shaft key ways are up, parallel to vertical centerline of engine. Install short hub drive gear on sprocket driven shaft and long hub gear on gear driven shaft. After installation gear and balance shaft keyways must be up with gear timing marks meshed as shown in (Fig. 117).

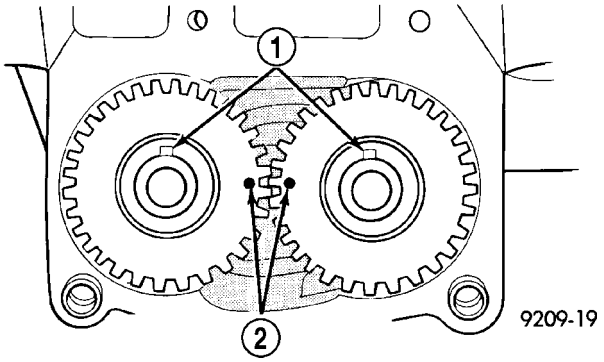

Fig. 117 Gear Timing

1 - KEY WAYS UP
2 - GEAR ALIGNMENT DOTS

(3) Install gear cover and tighten double ended stud/washer fastener to 12 N·m (105 in. lbs.).

(4) Align flat on balance shaft drive sprocket to the flat on crankshaft (Fig. 118).

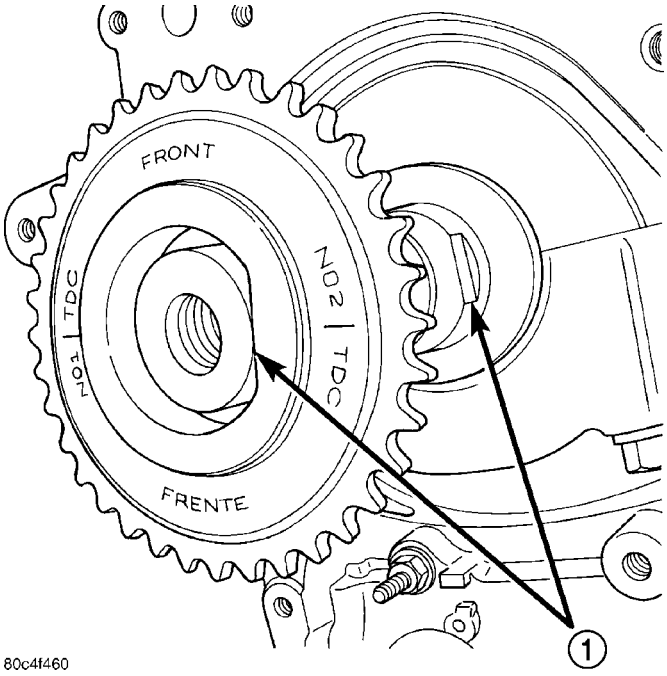

Fig. 118 Balance Shaft Sprocket Alignment to Crankshaft

1 - ALIGN FLATS

BALANCE SHAFTS AND CARRIER ASSEMBLY (Continued)

(5) Install balance shaft drive sprocket on crankshaft using Special Tool 6052 (Fig. 119).

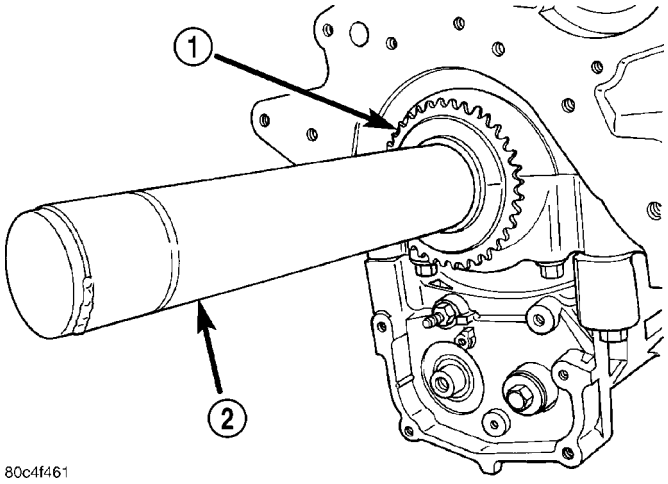

Fig. 119 Balance Shaft Drive

1 - SPROCKET
2 - SPECIAL TOOL 6052

(6) Turn crankshaft until number 1 cylinder is at top dead center (TDC). The timing marks on the chain sprocket should line up with the parting line on the left side of number one main bearing cap. (Fig. 120).

(7) Place chain over crankshaft sprocket so that the plated link of the chain is over the number 1 cylinder timing mark on the balance shaft crankshaft sprocket (Fig. 120).

(8) Place balance shaft sprocket into the timing chain (Fig. 120) and align the timing mark on the sprocket (dot) with the (lower) plated link on the chain.

NOTE: The lower plated link is 8 links from the upper link.

(9) With balance shaft keyways pointing up (12 o'clock) slide the balance shaft sprocket onto the nose of the balance shaft. The balance shaft may have to be pushed in slightly to allow for clearance.

NOTE: THE TIMING MARK ON THE SPROCKET, THE (LOWER) NICKEL PLATED LINK, AND THE ARROW ON THE SIDE OF THE GEAR COVER SHOULD LINE UP WHEN THE BALANCE SHAFTS ARE TIMED CORRECTLY.

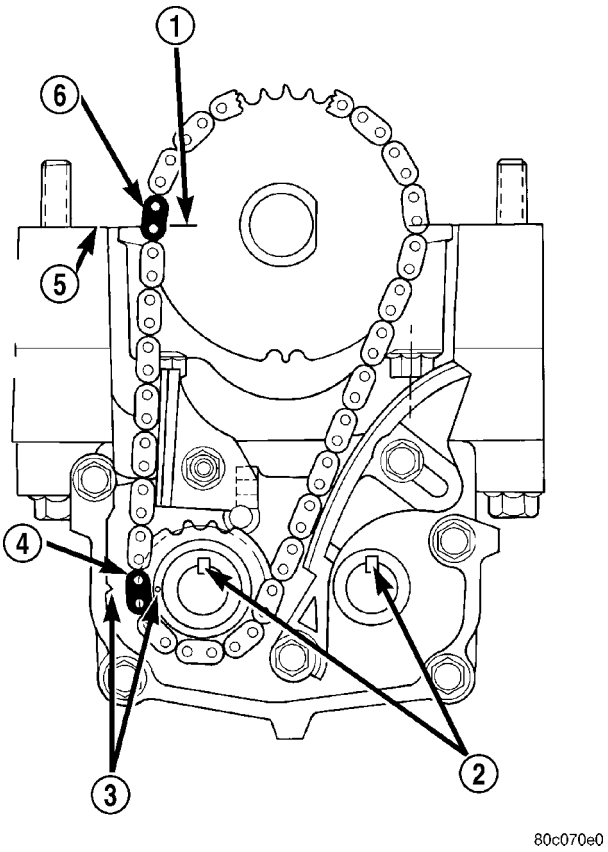

Fig. 120 Balance Shaft Timing

1 - MARK ON SPROCKET
2 - KEYWAYS UP
3 - ALIGN MARKS
4 - PLATED LINK
5 - PARTING LINE (BEDPLATE TO BLOCK)
6 - PLATED LINK

(10) If the sprockets are timed correctly, install the balance shaft bolts and tighten to 28 N·m (250 in. lbs.). A wood block placed between crankcase and crankshaft counterbalance will prevent crankshaft and gear rotation.

(11) **CHAIN TENSIONING:**

(a) Install chain tensioner loosely assembled.

(b) Position guide on double ended stud making sure tab on the guide fits into slot on the gear cover. Install and tighten nut/washer assembly to 12 N·m (105 in. lbs.).

BALANCE SHAFTS AND CARRIER ASSEMBLY (Continued)

(c) Place a shim 1 mm (0.039 in.) thick x 70 mm (2.75 in.) long or between tensioner and chain. Push tensioner and shim up against the chain. **Apply firm pressure 2.5–3 Kg (5.5–6.6 lbs.) directly behind the adjustment slot to take up all slack.** Chain must have shoe radius contact as shown in (Fig. 121).

(d) With the load applied, tighten top tensioner bolt first, then bottom pivot bolt. Tighten bolts to 12 N·m (105 in. lbs.). Remove shim.

(e) Install carrier covers and tighten screws to 12 N·m (105 in. lbs.).

(12) Install pick-up tube and oil pan.

(13) Fill engine crankcase with proper oil to correct level.

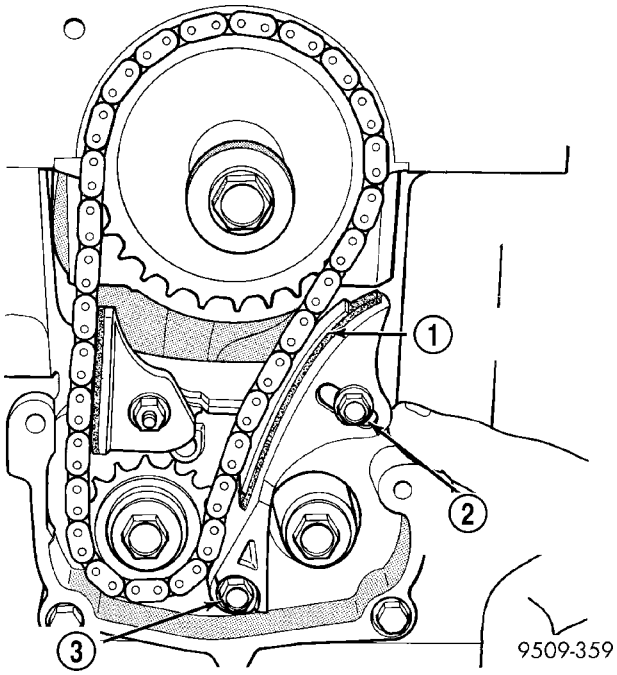

Fig. 121 Chain Tension Adjustment

1 - 1MM (0.039 IN.) SHIM
2 - TENSIONER (ADJUSTER) BOLT
3 - PIVOT BOLT

BALANCE SHAFT CARRIER

DESCRIPTION

The 2.4L engine is equipped with two nodular cast iron balance shafts installed in a cast aluminum carrier attached to the lower cylinder block (Fig. 122).

OPERATION

The balance shafts are driven by the crankshaft via a roller chain and sprockets. The balance shafts are connected by helical gears. The dual counter rotating shafts decrease second order vertical shaking forces caused by component movement.

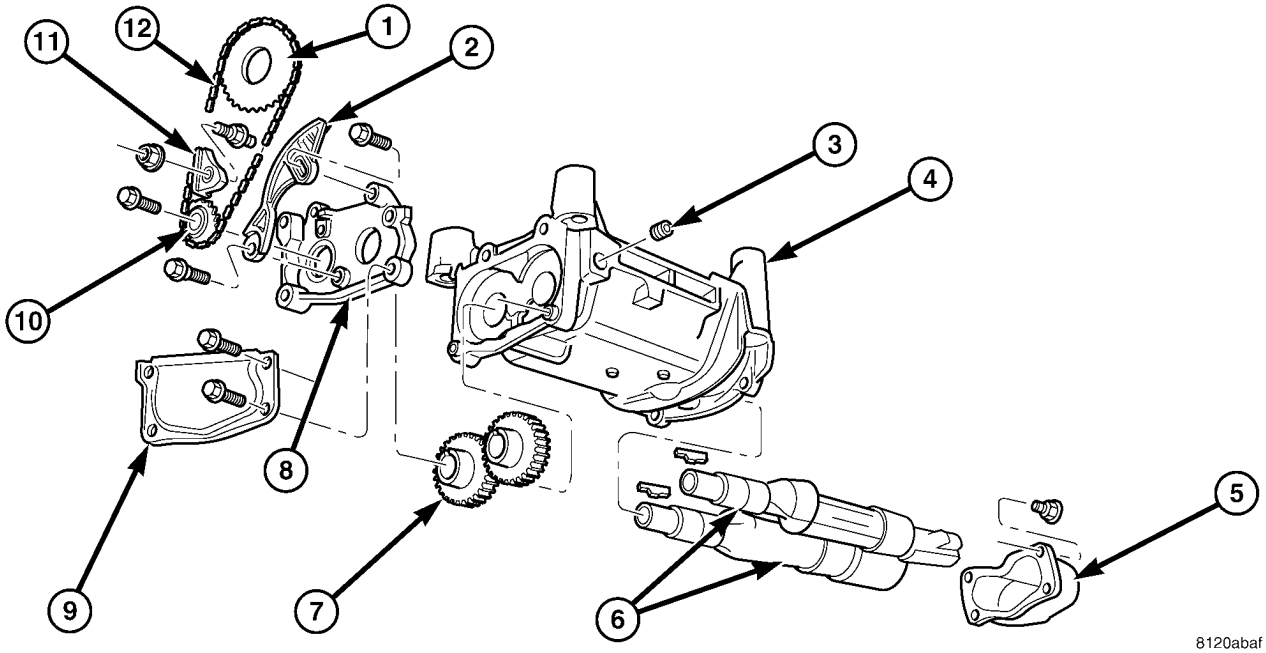

Fig. 122 Balance Shafts and Carrier Assembly

1 - SPROCKET
2 - TENSIONER
3 - PLUG
4 - CARRIER
5 - REAR COVER
6 - BALANCE SHAFTS
7 - GEARS
8 - GEAR COVER
9 - CHAIN COVER
10 - SPROCKET
11 - GUIDE
12 - CHAIN

BALANCE SHAFT CARRIER (Continued)

REMOVAL

(Refer to 9 - ENGINE/VALVE TIMING/BALANCE SHAFT - REMOVAL)

INSTALLATION

(Refer to 9 - ENGINE/VALVE TIMING/BALANCE SHAFT - INSTALLATION)

BALANCE SHAFT CHAIN

REMOVAL

(Refer to 9 - ENGINE/VALVE TIMING/BALANCE SHAFT - REMOVAL)

INSTALLATION

(Refer to 9 - ENGINE/VALVE TIMING/BALANCE SHAFT - INSTALLATION)

ENGINE - 3.7L

TABLE OF CONTENTS

page

ENGINE - 3.7L
DESCRIPTION 74
DIAGNOSIS AND TESTING
DIAGNOSIS AND TESTING - ENGINE DIAGNOSIS - INTRODUCTION 75
DIAGNOSIS AND TESTING - ENGINE DIAGNOSIS - PERFORMANCE 75
DIAGNOSIS AND TESTING - ENGINE DIAGNOSIS - MECHANICAL 77
DIAGNOSIS AND TESTING - ENGINE DIAGNOSIS - LUBRICATION 78
DIAGNOSIS AND TESTING - CYLINDER COMPRESSION PRESSURE 79
DIAGNOSIS AND TESTING - CYLINDER COMBUSTION PRESSURE LEAKAGE 79
STANDARD PROCEDURE
ENGINE GASKET SURFACE PREPARATION . 80
STANDARD PROCEDURE - REPAIR DAMAGED OR WORN THREADS 81
ENGINE CORE AND OIL GALLERY PLUGS . . 81
REMOVAL 81
INSTALLATION 82
SPECIFICATIONS
TORQUE 83
SPECIFICATIONS - 3.7L ENGINE 83
SPECIAL TOOLS
3.7L ENGINE 87
AIR CLEANER ELEMENT
REMOVAL - 3.7L 91
INSTALLATION - 3.7L 91
CYLINDER HEAD - LEFT
DESCRIPTION - VALVE GUIDES 91
DIAGNOSIS AND TESTING
DIAGNOSIS AND TESTING - HYDRAULIC LASH ADJUSTER 91
CYLINDER HEAD GASKET 91
REMOVAL 92
CLEANING 94
INSTALLATION 94
CAMSHAFT
DESCRIPTION 95
REMOVAL 95
INSTALLATION 96
COVER - CYLINDER HEAD
DESCRIPTION 97
REMOVAL 97
INSTALLATION 98
INTAKE/EXHAUST VALVES & SEATS
DESCRIPTION 98
STANDARD PROCEDURE - REFACING 98
REMOVAL 99
INSTALLATION 100
ROCKER ARM
DESCRIPTION 101
REMOVAL 101
SEALS - VALVE GUIDE
DESCRIPTION 101
SPRINGS VALVE
DESCRIPTION 101
REMOVAL 101
INSTALLATION 102
CYLINDER HEAD - RIGHT
DESCRIPTION
DESCRIPTION - CYLINDER HEAD 102
DESCRIPTION - VALVE GUIDES 102
DESCRIPTION 102
DIAGNOSIS AND TESTING
DIAGNOSIS AND TESTING - HYDRAULIC LASH ADJUSTER 102
DIAGNOSIS AND TESTING - CYLINDER HEAD GASKET 102
REMOVAL 103
CLEANING 105
INSPECTION 105
INSTALLATION 105
CAMSHAFT
DESCRIPTION 107
REMOVAL 107
INSTALLATION 109
COVER - CYLINDER HEAD
REMOVAL 109
INSTALLATION 109
INTAKE/EXHAUST VALVES & SEATS
STANDARD PROCEDURE - REFACING 110
REMOVAL 111
INSTALLATION 111
ROCKER ARM
DESCRIPTION 112
REMOVAL 112
INSTALLATION 113
SEALS - VALVE GUIDE
DESCRIPTION 113
SPRINGS - VALVE
DESCRIPTION 113
REMOVAL 113
INSTALLATION 114
ENGINE BLOCK
DESCRIPTION 114
STANDARD PROCEDURE - CYLINDER BORE HONING 114

CLEANING 115
INSPECTION 115
CRANKSHAFT
DESCRIPTION 116
REMOVAL 116
INSPECTION 116
INSTALLATION 117
CRANKSHAFT MAIN BEARINGS
STANDARD PROCEDURE
MAIN BEARING - FITTING 119
CRANKSHAFT OIL SEAL - FRONT
REMOVAL 120
INSTALLATION 121
CRANKSHAFT OIL SEAL - REAR
DIAGNOSIS AND TESTING - REAR SEAL
AREA LEAKS 121
REMOVAL 122
INSTALLATION 122
FLEX PLATE
REMOVAL 123
INSTALLATION 123
PISTON & CONNECTING ROD
DESCRIPTION 123
STANDARD PROCEDURE
CONNECTING ROD BEARING FITTING . . . 124
STANDARD PROCEDURE - PISTON
FITTING 126
REMOVAL 126
CLEANING 127
INSPECTION 127
INSTALLATION 127
PISTON RINGS
STANDARD PROCEDURE - PISTON RING
FITTING 128
VIBRATION DAMPER
REMOVAL 130
INSTALLATION 131
STRUCTURAL COVER
DESCRIPTION 131
OPERATION 131
REMOVAL 131
INSTALLATION 131
FRONT MOUNT
REMOVAL 132
INSTALLATION 132
REAR MOUNT
REMOVAL 133
INSTALLATION 133
LUBRICATION
DESCRIPTION 134
OPERATION 135
DIAGNOSIS AND TESTING
DIAGNOSIS AND TESTING - ENGINE OIL LEAK . 137
DIAGNOSIS AND TESTING - CHECKING
ENGINE OIL PRESSURE 138
DIAGNOSIS AND TESTING - REAR SEAL
AREA LEAKS 138
OIL
STANDARD PROCEDURE - ENGINE OIL
SERVICE 139
OIL FILTER
REMOVAL 140
INSTALLATION 140
OIL PAN
DESCRIPTION 140
REMOVAL
REMOVAL 141
REMOVAL - 4x4 141
CLEANING 142
INSPECTION 142
INSTALLATION
INSTALLATION 142
INSTALLATION - 4x4 142
SWITCH - OIL PRESSURE
DESCRIPTION 143
OPERATION 143
REMOVAL 143
INSTALLATION 143
PUMP - ENGINE OIL
REMOVAL 144
DISASSEMBLY 144
INSPECTION 144
ASSEMBLY 145
INSTALLATION 145
MANIFOLD - INTAKE
DESCRIPTION 146
DIAGNOSIS AND TESTING - INTAKE
MANIFOLD LEAKS 146
REMOVAL 146
INSTALLATION 147
MANIFOLD - EXHAUST
DESCRIPTION 148
REMOVAL 148
INSTALLATION 148
VALVE TIMING
DESCRIPTION 149
OPERATION 149
STANDARD PROCEDURE
MEASURING TIMING CHAIN WEAR 151
SERVICE PROCEDURE - TIMING
VERIFICATION 151
BALANCE SHAFT
REMOVAL 153
INSTALLATION 155
TIMING BELT / CHAIN COVER(S)
REMOVAL 155
INSTALLATION 156
IDLER SHAFT
REMOVAL 157
INSTALLATION 157
TIMING BELT/CHAIN AND SPROCKET(S)
REMOVAL 157
INSPECTION 159
INSTALLATION 159

ENGINE - 3.7L

DESCRIPTION

The 3.7 liter (226 CID) six-cylinder engine (Fig. 1) is an 90° single overhead camshaft engine. The cast iron cylinder block is made up of two different components; the first component is the cylinder bore and upper block, the second component is the bedplate that comprises the lower portion of the cylinder block and houses the lower half of the crankshaft main bearings. The cylinders are numbered from front to rear with the left bank being numbered 1,3, and 5 and the right bank being numbered 2,4, and 6. The firing order is 1–6–5–4–3–2. The engine serial number is located at the right front side of the engine block.

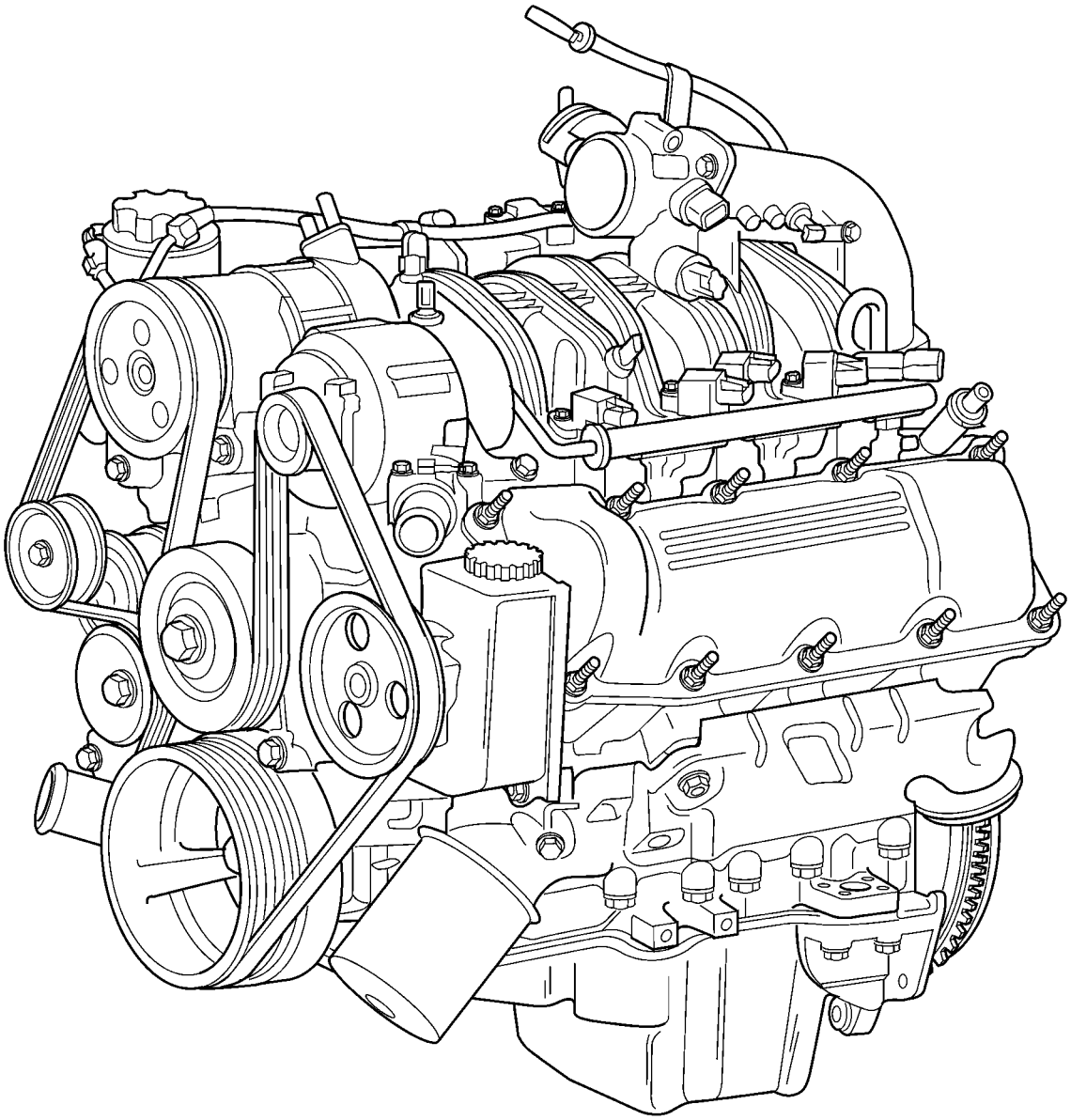

Fig. 1 3.7 L ENGINE

ENGINE - 3.7L (Continued)

DIAGNOSIS AND TESTING

DIAGNOSIS AND TESTING - ENGINE DIAGNOSIS - INTRODUCTION

Engine diagnosis is helpful in determining the causes of malfunctions not detected and remedied by routine maintenance.

These malfunctions may be classified as either performance (e.g., engine idles rough and stalls) or mechanical (e.g., a strange noise).

(Refer to 9 - ENGINE - DIAGNOSIS AND TESTING)—PERFORMANCE and (Refer to 9 - ENGINE - DIAGNOSIS AND TESTING)—MECHANICAL for possible causes and corrections of malfunctions. (Refer to 14 - FUEL SYSTEM/FUEL DELIVERY - DIAGNOSIS AND TESTING) and (Refer to 14 - FUEL SYSTEM/FUEL INJECTION - DIAGNOSIS AND TESTING) for the fuel system diagnosis.

Additional tests and diagnostic procedures may be necessary for specific engine malfunctions that can not be isolated with the Service Diagnosis charts. Information concerning additional tests and diagnosis is provided within the following diagnosis:

- Cylinder Compression Pressure Test (Refer to 9 - ENGINE - DIAGNOSIS AND TESTING).
- Cylinder Combustion Pressure Leakage Test (Refer to 9 - ENGINE - DIAGNOSIS AND TESTING).
- Engine Cylinder Head Gasket Failure Diagnosis (Refer to 9 - ENGINE/CYLINDER HEAD - DIAGNOSIS AND TESTING).
- Intake Manifold Leakage Diagnosis (Refer to 9 - ENGINE/MANIFOLDS/INTAKE MANIFOLD - DIAGNOSIS AND TESTING).

DIAGNOSIS AND TESTING - ENGINE DIAGNOSIS - PERFORMANCE

CONDITION	POSSIBLE CAUSE	CORRECTION
ENGINE WILL NOT START	1. Weak battery	1. Charge or replace as necessary.
	2. Corroded or loose battery connections.	2. Clean and tighten battery connections. Apply a coat of light mineral grease to the terminals.
	3. Faulty starter.	3. (Refer to 8 - ELECTRICAL/ STARTING - DIAGNOSIS AND TESTING).
	4. Faulty coil or control unit.	4. (Refer to 8 - ELECTRICAL/IGNITION CONTROL/IGNITION COIL - REMOVAL).
	5. Incorrect spark plug gap.	5. (Refer to 8 - ELECTRICAL/IGNITION CONTROL/SPARK PLUG - CLEANING).
	6. Incorrect right bank cam timing.	6. Refer to engine timing in this section.
	7. Dirt or water in fuel system.	7. Clean system and replace fuel filter.
	8. Faulty fuel pump, relay or wiring.	8. Repair or replace as necessary.
	9. Faulty cam or crank sensor	9. Refer to Ignition system.

ENGINE - 3.7L (Continued)

CONDITION	POSSIBLE CAUSE	CORRECTION
ENGINE STALLS OR ROUGH IDLE	1. Vacuum leak.	1. Inspect intake manifold and vacuum hoses, repair or replace as necessary.
	2. Faulty crank position sensor	2. Replace crank position sensor.
	3. Faulty coil.	3. (Refer to 8 - ELECTRICAL/IGNITION CONTROL/IGNITION COIL - REMOVAL).
	4. Incorrect cam timing.	4. (Refer to 9 - ENGINE/VALVE TIMING - STANDARD PROCEDURE).
ENGINE LOSS OF POWER	1. Dirty or incorrectly gapped spark plugs.	1. (Refer to 8 - ELECTRICAL/IGNITION CONTROL/SPARK PLUG - CLEANING).
	2. Dirt or water in fuel system.	2. Clean system and replace fuel filter.
	3. Faulty fuel pump.	3. (Refer to 14 - FUEL SYSTEM/ FUEL DELIVERY/FUEL PUMP - DIAGNOSIS AND TESTING).
	4. Blown cylinder head gasket.	4. Replace cylinder head gasket.
	5. Low compression.	5. (Refer to 9 - ENGINE - DIAGNOSIS AND TESTING), repair as necessary.
	6. Burned, warped or pitted valves.	6. Replace as necessary.
	7. Plugged or restricted exhaust system.	7. Inspect and replace as necessary.
	8. Faulty coil.	8. (Refer to 8 - ELECTRICAL/IGNITION CONTROL/IGNITION COIL - REMOVAL).
	9. Incorrect cam timing.	9. Refer to Engine Timing in this section.
ENGINE MISSES ON ACCELERATION	1. Spark plugs dirty or incorrectly gapped.	1. (Refer to 8 - ELECTRICAL/IGNITION CONTROL/SPARK PLUG - CLEANING).
	2. Dirt in fuel system.	2. Clean fuel system.
	3. Burned, warped or pitted valves.	3. Replace as necessary.
	4. Faulty coil.	4. (Refer to 8 - ELECTRICAL/IGNITION CONTROL/IGNITION COIL - REMOVAL).
ENGINE MISSES AT HIGH SPEED	1. Spark plugs dirty or incorrectly gapped.	1. (Refer to 8 - ELECTRICAL/IGNITION CONTROL/SPARK PLUG - CLEANING).
	2. Faulty coil.	2. (Refer to 8 - ELECTRICAL/IGNITION CONTROL/IGNITION COIL - REMOVAL).
	3. Dirt or water in fuel system.	3. Clean system and replace fuel filter.

ENGINE - 3.7L (Continued)

DIAGNOSIS AND TESTING - ENGINE DIAGNOSIS - MECHANICAL

CONDITION	POSSIBLE CAUSES	CORRECTIONS
NOISY VALVES	1. High or low oil level in crankcase.	1. (Refer to LUBRICATION & MAINTENANCE/FLUID TYPES - SPECIFICATIONS).
	2. Thin or diluted oil.	2. Change oil and filter.
	3. Low oil pressure.	3. Check oil pump, if Ok, check rod and main bearings for excessive wear.
	4. Dirt in lash adjusters.	4. Clean or replace as necessary.
	5. Worn rocker arms.	5. Replace as necessary.
	6. Worn valve guides.	6. (Refer to 9 - ENGINE/CYLINDER HEAD/INTAKE/EXHAUST VALVES & SEATS - STANDARD PROCEDURE).
	7. Excessive runout of valve seats.	7. Service valves and valve seats (Refer to 9 - ENGINE/CYLINDER HEAD/INTAKE/EXHAUST VALVES & SEATS - STANDARD PROCEDURE)
ENGINE VIBRATION	1. Refer to Engine Timing in this section	1. Counter Balance Shaft not timed properly
CONNECTING ROD NOISE	1. Insufficient oil supply.	1. (Refer to LUBRICATION & MAINTENANCE/FLUID TYPES - SPECIFICATIONS).
	2. Low oil pressure.	2. Check oil pump, if Ok, check rod and main bearings for excessive wear.
	3. Thin or diluted oil.	3. Change oil and filter.
	4. Excessive bearing clearance.	4. Replace as necessary.
	5. Connecting rod journal out-of-round.	5. Service or replace crankshaft.
	6. Misaligned connecting rods.	6. Replace bent connecting rods.
MAIN BEARING NOISE	1. Insufficient oil supply.	1. (Refer to LUBRICATION & MAINTENANCE/FLUID TYPES - SPECIFICATIONS).
	2. Low oil pressure.	2. Check oil pump, if Ok, check rod and main bearings for excessive wear.
	3. Thin or diluted oil.	3. Change oil and filter.
	4. Excessive bearing clearance.	4. Replace as necessary.
	5. Excessive end play.	5. Check thrust washers for wear.
	6. Crankshaft journal out-of round.	6. Service or replace crankshaft.
	7. Loose flywheel or torque converter.	7. Tighten to correct torque

ENGINE - 3.7L (Continued)

DIAGNOSIS AND TESTING - ENGINE DIAGNOSIS - LUBRICATION

CONDITION	POSSIBLE CAUSES	CORRECTION
OIL LEAKS	1. Gaskets and O-Rings.	1.
	(a) Misaligned or damaged.	(a) Replace as necessary.
	(b) Loose fasteners, broken or porous metal parts.	(b) Tighten fasteners, Repair or replace metal parts.
	2. Crankshaft rear seal	2. Replace as necessary (Refer to 9 - ENGINE/ENGINE BLOCK/ CRANKSHAFT OIL SEAL - REAR - REMOVAL).
	3. Crankshaft seal flange. Scratched, nicked or grooved.	3. Polish or replace crankshaft.
	4. Oil pan flange cracked.	4. Replace oil pan (Refer to 9 - ENGINE/LUBRICATION/OIL PAN - REMOVAL).
	5. Timing chain cover seal damaged.	5. Re-seal timing cover.
	6. Scratched or damaged vibration damper hub.	6. Polish or replace damper.
OIL PRESSURE DROP	1. Low oil level.	1. Check and correct oil level.
	2. Faulty oil pressure sending unit.	2. Replace sending unit (Refer to 9 - ENGINE/LUBRICATION/OIL PRESSURE SENSOR/SWITCH - REMOVAL).
	3. Low oil pressure.	3. Check oil pump and bearing clearance.
	4. Clogged oil filter.	4. Replace oil filter (Refer to 9 - ENGINE/LUBRICATION/OIL FILTER - REMOVAL).
	5. Worn oil pump.	5. Replace oil pump (Refer to 9 - ENGINE/LUBRICATION/OIL PUMP - REMOVAL).
	6. Thin or diluted oil.	6. Change oil and filter.
	7. Excessive bearing clearance.	7. Replace as necessary.
	8. Oil pump relief valve stuck.	8. Replace oil pump (Refer to 9 - ENGINE/LUBRICATION/OIL PUMP - REMOVAL).
	9. Oil pick up tube loose, damaged or clogged.	9. Replace as necessary.

ENGINE - 3.7L (Continued)

CONDITION	POSSIBLE CAUSES	CORRECTION
OIL PUMPING AT RINGS; SPARK PLUGS FOULING	1. Worn or damaged rings.	1. Hone cylinder bores and replace rings.
	2. Carbon in oil ring slots.	2. Replace rings (Refer to 9 - ENGINE/ENGINE BLOCK/PISTON RINGS - STANDARD PROCEDURE).
	3. Incorrect ring size installed.	3. Replace rings (Refer to 9 - ENGINE/ENGINE BLOCK/PISTON RINGS - STANDARD PROCEDURE).
	4. Worn valve guides.	4. Ream guides and replace valves (Refer to 9 - ENGINE/CYLINDER HEAD/INTAKE/EXHAUST VALVES & SEATS - STANDARD PROCEDURE).
	5. Leaking valve guide seals.	5. Replace valve guide seals.

DIAGNOSIS AND TESTING - CYLINDER COMPRESSION PRESSURE

The results of a cylinder compression pressure test can be utilized to diagnose several engine malfunctions.

Ensure the battery is completely charged and the engine starter motor is in good operating condition. Otherwise the indicated compression pressures may not be valid for diagnosis purposes.

(1) Clean the spark plug recesses with compressed air.

(2) Remove the spark plugs.

(3) Secure the throttle in the wide-open position.

(4) Disable the fuel system (Refer to 14 - FUEL SYSTEM/FUEL DELIVERY - DESCRIPTION).

(5) Remove the ASD relay (Refer to 8 - ELECTRICAL/IGNITION CONTROL/AUTO SHUT DOWN RELAY - REMOVAL).

(6) Insert a compression pressure gauge and rotate the engine with the engine starter motor for three revolutions.

(7) Record the compression pressure on the 3rd revolution. Continue the test for the remaining cylinders.

(8) (Refer to 9 - ENGINE - SPECIFICATIONS) for the correct engine compression pressures.

DIAGNOSIS AND TESTING - CYLINDER COMBUSTION PRESSURE LEAKAGE

The combustion pressure leakage test provides an accurate means for determining engine condition.

Combustion pressure leakage testing will detect:

- Exhaust and intake valve leaks (improper seating).
- Leaks between adjacent cylinders or into water jacket.
- Any causes for combustion/compression pressure loss.

(1) Check the coolant level and fill as required. DO NOT install the radiator cap.

(2) Start and operate the engine until it attains normal operating temperature, then turn the engine OFF.

(3) Remove the spark plugs.

(4) Remove the oil filler cap.

(5) Remove the air cleaner.

(6) Calibrate the tester according to the manufacturer's instructions. The shop air source for testing should maintain 483 kPa (70 psi) minimum, 1,379 kPa (200 psi) maximum and 552 kPa (80 psi) recommended.

(7) Perform the test procedures on each cylinder according to the tester manufacturer's instructions. Set piston of cylinder to be tested at TDC compression,While testing, listen for pressurized air escaping through the throttle body, tailpipe and oil filler cap opening. Check for bubbles in the radiator coolant.

All gauge pressure indications should be equal, with no more than 25% leakage.

FOR EXAMPLE: At 552 kPa (80 psi) input pressure, a minimum of 414 kPa (60 psi) should be maintained in the cylinder.

Refer to CYLINDER COMBUSTION PRESSURE LEAKAGE DIAGNOSIS CHART.

ENGINE - 3.7L (Continued)

CYLINDER COMBUSTION PRESSURE LEAKAGE DIAGNOSIS CHART

CONDITION	POSSIBLE CAUSE	CORRECTION
AIR ESCAPES THROUGH THROTTLE BODY	Intake valve bent, burnt, or not seated properly	Inspect valve and valve seat. Reface or replace, as necessary. Inspect valve springs. Replace as necessary.
AIR ESCAPES THROUGH TAILPIPE	Exhaust valve bent, burnt, or not seated properly	Inspect valve and valve seat. Reface or replace, as necessary. Inspect valve springs. Replace as necessary.
AIR ESCAPES THROUGH RADIATOR	Head gasket leaking or cracked cylinder head or block	Remove cylinder head and inspect. Replace defective part
MORE THAN 50% LEAKAGE FROM ADJACENT CYLINDERS	Head gasket leaking or crack in cylinder head or block between adjacent cylinders	Remove cylinder head and inspect. Replace gasket, head, or block as necessary
MORE THAN 25% LEAKAGE AND AIR ESCAPES THROUGH OIL FILLER CAP OPENING ONLY	Stuck or broken piston rings; cracked piston; worn rings and/or cylinder wall	Inspect for broken rings or piston. Measure ring gap and cylinder diameter, taper and out-of-round. Replace defective part as necessary

STANDARD PROCEDURE

ENGINE GASKET SURFACE PREPARATION

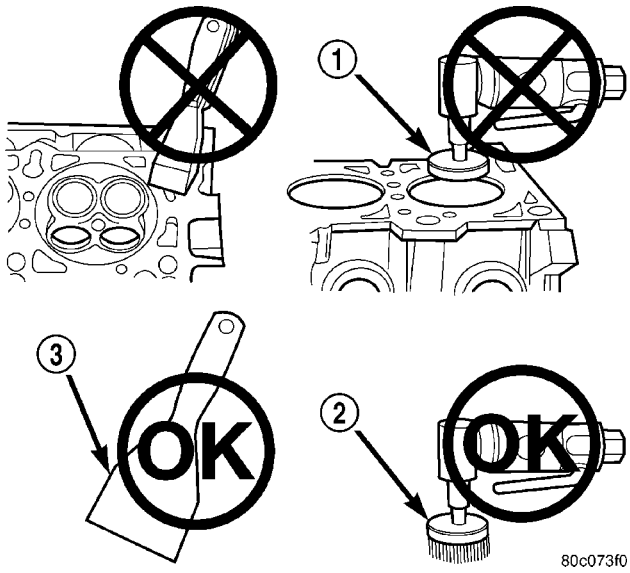

Fig. 2 Proper Tool Usage For Surface Preparation

1 - ABRASIVE PAD
2 - 3M ROLOC™ BRISTLE DISC
3 - PLASTIC/WOOD SCRAPER

To ensure engine gasket sealing, proper surface preparation must be performed, especially with the use of aluminum engine components and multi-layer steel cylinder head gaskets.

Never use the following to clean gasket surfaces: (Fig. 2)

- Metal scraper.
- Abrasive pad or paper to clean cylinder block and head.
- High speed power tool with an abrasive pad or a wire brush.

NOTE: Multi-Layer Steel (MLS) head gaskets require a scratch free sealing surface.

Only use the following for cleaning gasket surfaces: (Fig. 2)

- Solvent or a commercially available gasket remover
- Plastic or wood scraper.
- Drill motor with 3M Roloc™ Bristle Disc (white or yellow).

CAUTION: Excessive pressure or high RPM (beyond the recommended speed), can damage the sealing surfaces. The mild (white, 120 grit) bristle disc is recommended. If necessary, the medium (yellow, 80 grit) bristle disc may be used on cast iron surfaces with care.

ENGINE - 3.7L (Continued)

STANDARD PROCEDURE - REPAIR DAMAGED OR WORN THREADS

CAUTION: Be sure that the tapped holes maintain the original center line.

Damaged or worn threads can be repaired. Essentially, this repair consists of:

- Drilling out worn or damaged threads.
- Tapping the hole with a special Heli-Coil Tap, or equivalent.
- Installing an insert into the tapped hole to bring the hole back to its original thread size.

ENGINE CORE AND OIL GALLERY PLUGS

Using a blunt tool such as a drift and a hammer, strike the bottom edge of the cup plug. With the cup plug rotated, grasp firmly with pliers or other suitable tool and remove plug (Fig. 3).

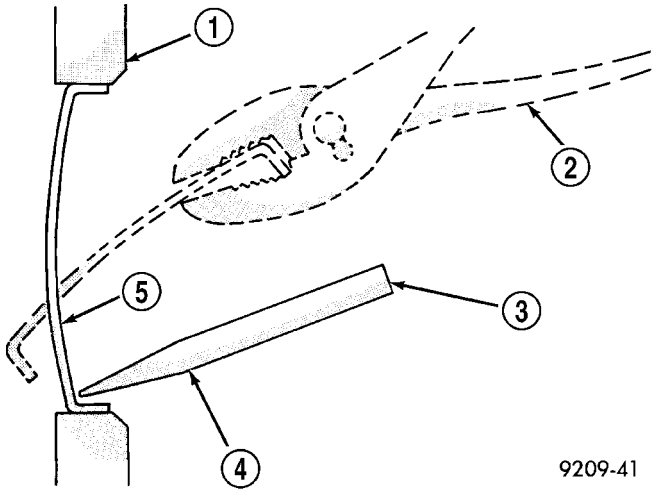

Fig. 3 Core Hole Plug Removal

1 - CYLINDER BLOCK
2 - REMOVE PLUG WITH PLIERS
3 - STRIKE HERE WITH HAMMER
4 - DRIFT PUNCH
5 - CUP PLUG

CAUTION: Do not drive cup plug into the casting as restricted cooling can result and cause serious engine problems.

Thoroughly clean inside of cup plug hole in cylinder block or head. Be sure to remove old sealer. Lightly coat inside of cup plug hole with Mopar® Stud and Bearing Mount. Make certain the new plug is cleaned of all oil or grease. Using proper drive plug, drive plug into hole so that the sharp edge of the plug is at least 0.5 mm (0.020 in.) inside the lead-in chamfer.

It is not necessary to wait for curing of the sealant. The cooling system can be refilled and the vehicle placed in service immediately.

REMOVAL

(1) Disconnect the battery negative cable.
(2) Remove hood. Mark hood hinge location for reinstallation.
(3) Remove air cleaner assembly.
(4) Remove radiator core support bracket.
(5) Remove fan shroud with electric fan assembly.
(6) Remove mechanical cooling fan.
(7) Remove drive belt.

NOTE: It is NOT necessary to discharge the A/C system to remove the engine.

(8) Remove A/C compressor and secure away from engine with lines attached.
(9) Remove generator and secure away from engine.

NOTE: Do NOT remove the phenolic pulley from the P/S pump. It is not required for P/S pump removal.

(10) Remove power steering pump with lines attached and secure away from engine.
(11) Drain cooling system.
(12) Remove coolant bottle.
(13) Disconnect the heater hoses from the engine.
(14) Disconnect heater hoses from heater core and remove hose assembly.
(15) Disconnect throttle and speed control cables.
(16) Remove upper radiator hose from engine.
(17) Remove lower radiator hose from engine.
(18) Disconnect the engine to body ground straps at the left side of cowl.
(19) Disconnect the engine wiring harness at the following points:

- Intake air temperature (IAT) sensor
- Fuel Injectors
- Throttle Position (TPS) Switch
- Idle Air Control (IAC) Motor
- Engine Oil Pressure Switch
- Engine Coolant Temperature (ECT) Sensor
- Manifold Absolute Pressure MAP) Sensor
- Camshaft Position (CMP) Sensor
- Coil Over Plugs
- Crankshaft Position Sensor

(20) Remove coil over plugs.
(21) Release fuel rail pressure.
(22) Remove fuel rail and secure away from engine.

NOTE: It is not necessary to release the quick connect fitting from the fuel supply line for engine removal.

ENGINE - 3.7L (Continued)

(23) Remove the PCV hose.
(24) Remove the breather hoses.
(25) Remove the vacuum hose for the power brake booster.
(26) Disconnect knock sensors.
(27) Remove engine oil dipstick tube.
(28) Remove intake manifold.
(29) Install engine lift plate.

NOTE: Recheck bolt torque for engine lift plate before removing engine.

(30) Secure the left and right engine wiring harnesses away from engine.
(31) Raise vehicle.
(32) Disconnect oxygen sensor wiring.
(33) Disconnect crankshaft postion sensor.
(34) Disconnect the engine block heater power cable, if equipped.
(35) Disconnect the front propshaft at the front differential and secure out of way.

NOTE: It is necessary to disconnect the front propshaft for access to the starter and left side exhaust flange.

(36) Remove the starter.
(37) Remove the ground straps from the left and right side of the block.
(38) Disconnect the right and left exhaust pipes at the manifolds and from the crossover, and remove from the vehicle.

NOTE: The exhaust clamps at the manifolds cannot be reused. New clamps must be used or leaks may occur.

NOTE: For manual transmission vehicles, the transmission must be removed from the vehicle, before the engine can be removed. The manual transmission will contact the floorpan before the engine clears the motor mounts, so it must be removed.

(39) Remove the structural cover.
(40) Remove torque convertor bolts, and mark location for reassembly.
(41) Remove transmission bellhousing to engine bolts.
(42) Loosen left and right engine mount thru bolts.

NOTE: It is not necessary to completely remove engine mount thru bolts, for engine removal.

(43) Lower the vehicle.
(44) Support the transmission with a suitable jack.
(45) Connect a suitable engine hoist to the engine lift plate.
(46) Remove engine from vehicle.

INSTALLATION

(1) Position the engine in the vehicle.
(2) Install both left and right side engine mounts onto engine.
(3) Raise the vehicle.
(4) Install the transmission bellhousing to engine mounting bolts. Tighten the bolts to 41 N·m (30ft. lbs.).
(5) Tighten the engine mount thru bolts.
(6) Install the torque convertor bolts.
(7) Connect the ground straps on the left and right side of the engine.
(8) Install the starter.
(9) Connect the crankshaft position sensor.
(10) Install the engine block heater power cable, if equipped.

CAUTION: The structural cover requires a specific torque sequence. Failure to follow this sequence may cause severe damage to the cover.

(11) Install the structural cover.

NOTE: New clamps must be used on exhaust manifold flanges. Failure to use new clamps may result in exhaust leaks.

(12) Install the left and right exhaust pipes.
(13) Connect the left and right oxygen sensors.
(14) Lower vehicle.
(15) Remove the engine lift plate.
(16) Connect the knock sensors.
(17) Connect the engine to body ground straps at the left side of the cowl.
(18) Install the intake manifold.
(19) Install the engine oil dipstick tube.
(20) Install the power brake booster vacuum hose.
(21) Install the breather hoses.
(22) Install the PCV hose.
(23) Install the fuel rail.
(24) Install the coil over plugs.
(25) Connect the engine wiring harness at the following points:

- Intake air temperature (IAT) sensor
- Fuel Injectors
- Throttle Position (TPS) Switch
- Idle Air Control (IAC) Motor
- Engine Oil Pressure Switch
- Engine Coolant Temperature (ECT) Sensor
- Manifold Absolute Pressure MAP) Sensor
- Camshaft Position (CMP) Sensor
- Coil Over Plugs
- Crankshaft Position Sensor

(26) Connect lower radiator hose.
(27) Connect upper radiator hose.

ENGINE - 3.7L (Continued)

(28) Connect throttle and speed control cables.
(29) Install the heater hose assembly.
(30) Install coolant recovery bottle.
(31) Install the power steering pump.
(32) Install the generator.
(33) Install the A/C compressor.
(34) Install the drive belt.
(35) Install the mechanical cooling fan.
(36) Install the fan shroud with the electric fan assembly.
(37) Install the radiator core support bracket.
(38) Install the air cleaner assembly.
(39) Refill the engine cooling system.
(40) Install the hood.
(41) Check and fill engine oil.
(42) Connect the battery negative cable.
(43) Start the engine and check for leaks.

SPECIFICATIONS

TORQUE

DESCRIPTION	N·m	Ft. Lbs.	In. Lbs.
Camshaft			
Non - Oiled Sprocket Bolt	122	90	—
Bearing Cap Bolts	11	—	100
Counterbalance shaft retaining bolt	28	—	250
Timing Chain Cover—Bolts	58	43	—
Connecting Rod Cap—Bolts	27	20	—
	PLUS 90° TURN		
Bed Plate—Bolts	Refer to Procedure		
Crankshaft Damper—Bolt	175	130	—
Cylinder Head—Bolts			
M11 Bolts	Refer To Procedure		
M8 Bolts	Refer To Procedure		
Cylinder Head Cover—Bolts	12	—	105
Exhaust Manifold—Bolts	25	18	—
Exhaust Manifold Heat Shield—Nuts	8	—	72
	Then loosen 45°		
Flexplate—Bolts	95	70	—
Engine Mount Bracket to Block—Bolts	61	45	—
Rear Mount to Transmission—Bolts	46	34	—
Generator Mounting—Bolts			
M10 Bolts	54	40	—
M8 Bolts	28	—	250
Intake Manifold—Bolts	12	—	105
	Refer to Procedure for Tightening Sequence		
Oil Pan—Bolts	15	—	130
Oil Pan—Drain Plug	34	25	—
Oil Pump—Bolts	28	—	250
Oil Pump Cover—Bolts	12	—	105
Oil Pickup Tube—Bolt and Nut	28	—	250
Oil Dipstick Tube to Engine Block—Bolt	15	—	130
Oil Fill Tube—Bolts	12	—	105
Timing Chain Guide—Bolts	28	—	250
Timing Chain Tensioner Arm—Bolt	28	—	250
Hydraulic Tensioner—Bolts	28	—	250
Timing Chain Primary Tensioner—Bolts	28	—	250
Timing Drive Idler Sprocket—Bolt	34	25	—
Thermostat Housing—Bolts	12	—	105
Water Pump—Bolts	58	43	—

SPECIFICATIONS - 3.7L ENGINE

GENERAL SPECIFICATIONS

DESCRIPTION	SPECIFICATION	
Type	90° SOHC V6 12 Valve	
Number of Cylinders	6	
Firing Order	1-6-5-4-3-2	
Lead Cylinder	No. 1 Left Bank	
Compression Ratio	9.6:1	
Max. Variation Between Cylinders	25%	
	Metric	**Standard**
Displacement	3.7 Liters	226 Cubic Inches

ENGINE - 3.7L (Continued)

DESCRIPTION	SPECIFICATION	
Bore	93.0 mm	3.66 in.
Stroke	90.8 mm	3.40 in.
Horsepower	211 @ 5200 RPM	
Torque	236ft. lbs.@4000 PRM	
Compression Pressure	1172-1551 kPa	170-225 psi

CYLINDER BLOCK

DESCRIPTION	SPECIFICATION	
	Metric	Standard
Bore Diameter	93.013 ± .0075 mm	3.6619 ± 0.0003 in.
Out of Round (MAX)	0.076 mm	0.003 in.
Taper (MAX)	0.051 mm	0.002 in.

PISTONS

DESCRIPTION	SPECIFICATION	
	Metric	Standard
Diameter	92.975 mm	3.6605 in.
Weight	365.0 grams	12.87 oz
Ring Groove Diameter		
No. 1	85.37 - 83.13 mm	3.282 - 3.273 in
No. 2	82.833 - 83.033 mm	3.261 - 3.310 in.
No. 3	83.88 - 84.08 mm	3.302 - 3.310 in.

PISTON PINS

DESCRIPTION	SPECIFICATION	
	Metric	Standard
Clearance In Piston	0.006 - 0.015 mm	0.0002 - 0.0005 in.
Diameter	24.017 - 24.020 mm	0.9455 - 0.9456 in.

PISTON RINGS

DESCRIPTION	SPECIFICATION	
	Metric	Standard
Ring Gap		
Top Compression Ring	0.20 - 0.36 mm	0.0079 - 0.0142 in.
Second Compression Ring	0.37 - 0.63 mm	0.0146 - 0.0249 in.
Oil Control (Steel Rails)	0.25 - 0.76 mm	0.0099 - 0.30 in.
Side Clearance		
Top Compression Ring	.051 - .094 mm	0.0020 - 0.0037 in.
Second Compression Ring	0.040 - 0.080 mm	0.0016 - 0.0031 in.
Oil Ring (Steel Ring)	.019 - .229 mm	.0007 - .0091 in.
Ring Width		
Top Compression Ring	1.472 - 1.490 mm	0.057 - 0.058 in.
Second Compression Ring	1.472 - 1.490 mm	0.057 - 0.058 in.
Oil Ring (Steel Rails)	0.445 - 0.470 mm	0.017 - 0.018 in.

CONNECTING RODS

DESCRIPTION	SPECIFICATION	
	Metric	Standard
Bearing Clearance	0.006 - 0.044 mm	0.0002 - 0.0017 in.
Side Clearance	0.10 - 0.35 mm	0.004 - 0.0138 in.
Piston Pin Clearance	.015 - .028 mm	0.0006 - 0.0011 in.
Bearing Bore Out of Round (MAX)	0.004 mm	0.0002 in.
Total Weight (Less Bearing)	612 grams	21.588 ounces

ENGINE - 3.7L (Continued)

CRANKSHAFT

DESCRIPTION	SPECIFICATION	
	Metric	Standard
Main Bearing Journal Diameter	63.488 - 63.512 mm	2.4996 - 2.5005 in.
Bearing Clearance	0.002 - 0.046 mm	0.00008 - 0.0018 in.
Out of Round (MAX)	0.005 mm	0.0002 in.
Taper (MAX)	0.006 mm	0.0004 in.
End Play	0.052 - 0.282 mm	0.0021 - 0.0112 in.
End Play (MAX)	0.282 mm	0.0112 in.
Connecting Rod Journal Diameter	57.908 - 57.892 mm	2.2798 - 2.2792 in.
Bearing Clearance	0.006 - 0.044	0.0002 - 0.0011 in.
Out of Round (MAX)	0.005 mm	0.0002 in.
Taper (MAX)	0.006 mm	0.0002 in.

CAMSHAFT

DESCRIPTION	SPECIFICATION	
	Metric	Standard
Bore Diameter	26.02 - 26.04 mm	1.0245 - 1.0252 in.
Bearing Journal Diameter	25.975 - 25.995 mm	1.0227 - 1.0235 in.
Bearing Clearance	0.025 - 0.065 mm	0.001 - 0.0026 in.
Bearing Clearance (MAX)	0.065 mm	0.0026 in.
End Play	.075 - .200 mm	0.003 - 0.0079 in.
End Play (MAX)	.200 mm	0.0079 in.

VALVE TIMING

DESCRIPTION	SPECIFICATION
Intake	
Opens (BTDC)	5.6°
Closes (ATDC)	240.1°
Duration	245.7°
Exhaust	
Opens (BTDC)	241.5°
Closes (ATDC)	20.1°
Duration	261.6°
Valve Overlap	25.7°

VALVES

DESCRIPTION	SPECIFICATION	
	Metric	Standard
Face Angle	45° - 45.5°	
Head Diameter		
Intake	48.52 - 48.78 mm	1.9103 - 1.9205 in.
Exhaust	36.87 - 37.13 mm	1.4516 - 1.4618 in.
Length (Overall)		
Intake	113.45 - 114.21 mm	4.4666 - 4.4965 in.
Exhaust	114.92 - 115.68 mm	4.5244 - 4.5543 in.
Stem Diameter		
Intake	6.931 - 6.957 mm	0.2729 - 0.2739 in.
Exhaust	6.902 - 6.928 mm	0.2717 - 0.2728 in.
Stem-to-Guide Clearance		
Intake	0.018 - 0.069 mm	0.0008 - 0.0028 in.
Exhaust	0.047 - 0.098 mm	0.0019 - 0.0039 in.
Max. Allowable Stem-to-Guide Clearance (Rocking Method)		
Intake	0.069 mm	0.0028 in.
Exhaust	0.098 mm	0.0039 in.
Valve Lift (Zero Lash)		
Intake	12.00 mm	0.472 in.
Exhaust	12.00 mm	0.472 in.

ENGINE - 3.7L (Continued)

VALVE SPRING

DESCRIPTION	SPECIFICATION	
	Metric	Standard
Free Length (Approx)		
Intake	48.18 mm	1.896 in.
Exhaust - w/damper	48.2 mm	1.897 in.
Spring Force (Valve Closed)		
Intake	332.0 - 368.0 N @ 40.12 mm	74.63 - 82.72 lbs. @ 1.5795 in.
Exhaust - (without damper)	356 - 394 N @ 39.12 mm	80.031 - 88.57 lbs. @ 1.54 in.
Spring Force (Valve Open)		
Intake	948.0 - 1038.0 N @ 28.12 mm	213.2 - 233.8 lbs. @ 1.107 in.
Exhaust - without damper	974 - 956 N @ 27.12 mm	218.8 - 215.1 lbs. @ 1.067 in.
Number of Coils		
Intake	7.30	
Exhaust	7.15	
Wire Diameter		
Intake	4.77 × 3.80mm	0.1878 × 0.1496 in.
Exhaust	4.66 × 3.72mm	0.1843 × .1464 in.
Installed Height (Spring Seat to Bottom of Retainer)		
Nominal		
Intake	40.12 mm	1.579 in.
Exhaust - w/damper	40.12 mm	1.579 in.

CYLINDER HEAD

DESCRIPTION	SPECIFICATION	
	Metric	Standard
Gasket Thickness (Compressed)	0.7 mm	(0.0276 in.)
Valve Seat Angle	44.5° - 45.0°	
Valve Seat Runout (MAX)	0.051 mm	0.002 in.
Valve Seat Width		
Intake	1.75 - 2.36 mm	0.0698 - 0.0928 in.
Exhaust	1.71 - 2.32 mm	0.0673 - 0.0911 in.
Guide Bore Diameter (Std.)	6.975 - 7.00 mm	0.2747 - 0.2756 in.
Cylinder Head Warpage (Flatness)	0.0508 mm	0.002 in.

OIL PUMP

DESCRIPTION	SPECIFICATION	
	Metric	Standard
Clearance Over Rotors/End Face (MAX)	0.095 mm	0.0038 in.
Cover Out - of -Flat (MAX)	0.025 mm	0.001 in.
Inner and Outer Rotor Thickness	12.02 mm	0.4731 in.
Outer Rotor to pocket (Diametral) clearance (MAX)	.235 mm	.0093 in.
Outer Rotor Diameter (MIN)	85.925 mm	0.400 in.
Tip Clearance Between Rotors (MAX)	0.150 mm	0.006 in.

ENGINE - 3.7L (Continued)

OIL PRESSURE

SPECIFICATION	SPECIFICATION	
	Metric	Standard
At Curb Idle Speed (MIN)*	25 kPa	4 psi
@ 3000 rpm	170 - 758 kPa	25 - 110 psi
*** CAUTION: If pressure is zero at curb idle, DO NOT run engine at 3000 rpm.**		

SPECIAL TOOLS

3.7L ENGINE

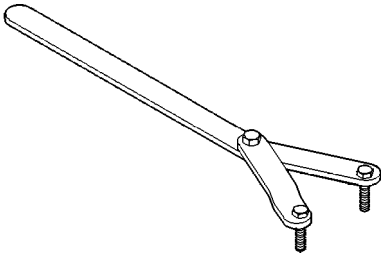

Spanner Wrench 6958

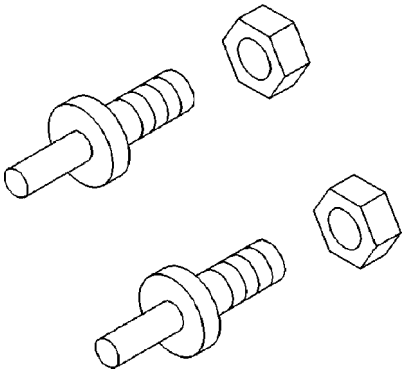

Adapter Pins 8346

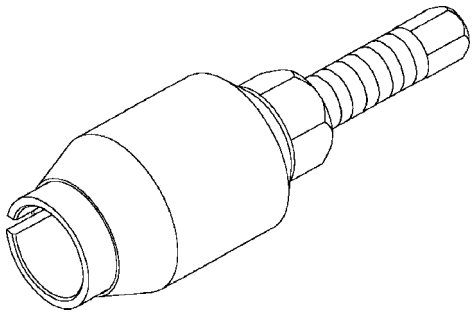

Front Crankshaft Seal Remover 8511

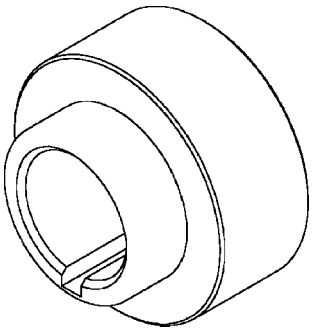

Front Crankshaft Seal Installer 8348

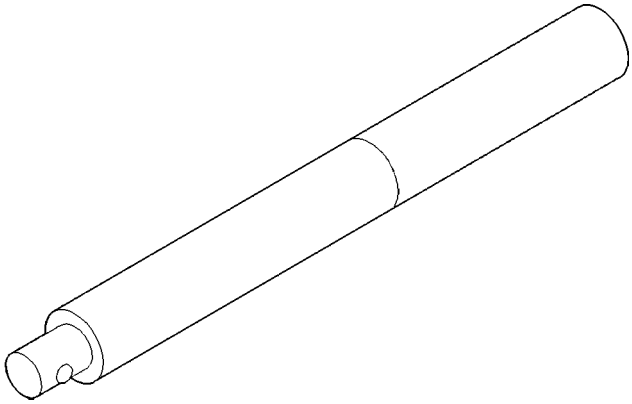

Handle C-4171

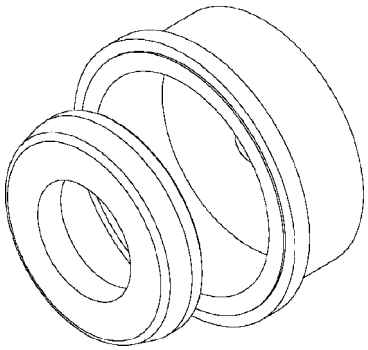

Rear Crankshaft Seal Installer 8349

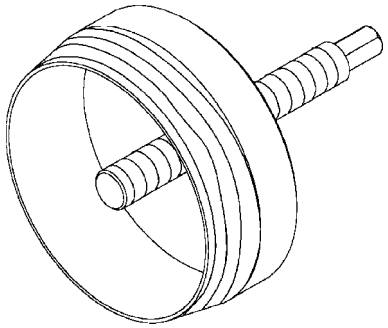

Rear Crankshaft Seal Remover 8506

ENGINE - 3.7L (Continued)

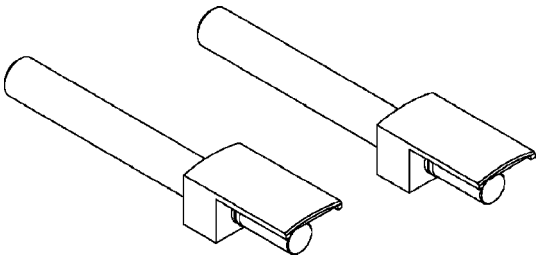

Connecting Rod Guides 8507

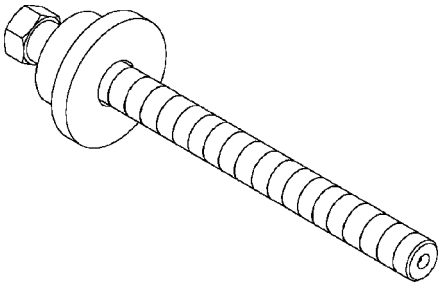

Crankshaft Damper Installer 8512

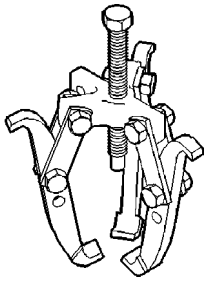

Puller 1026

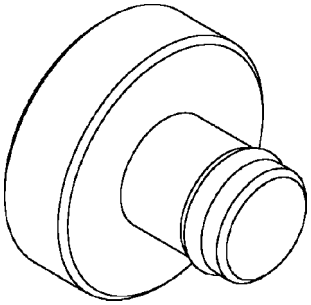

Crankshaft Damper Removal Insert 8513

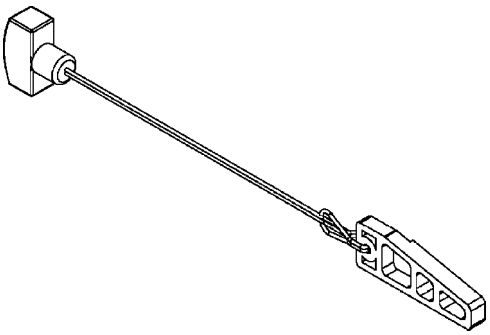

Chain Tensioner Wedge 8379

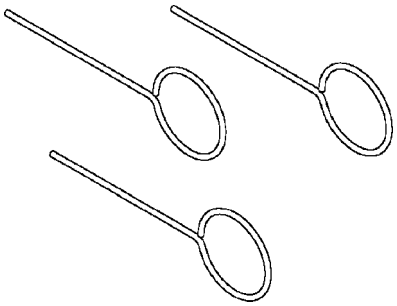

Chain Tensioner Pins 8514

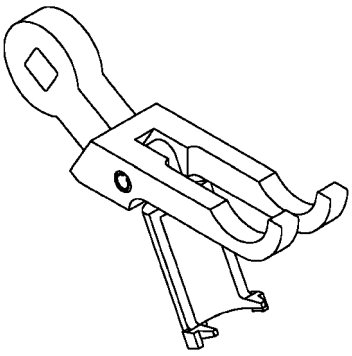

VALVE SPRING COMPRESSOR 8426

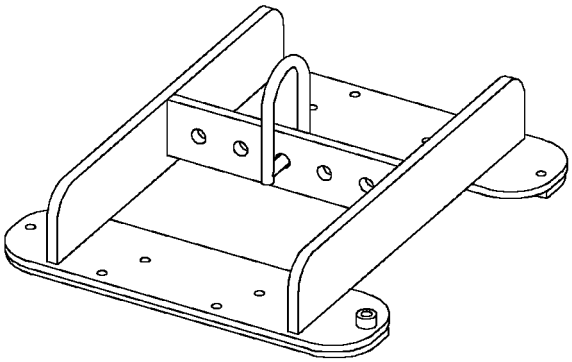

ENGINE LIFTING FIXTURE 8427

ENGINE - 3.7L (Continued)

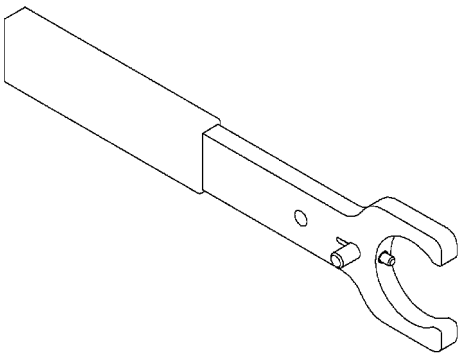

CAMSHAFT HOLDER 8428

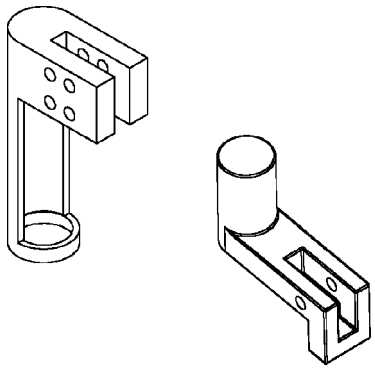

Valve Spring Compressor Adapters 8519

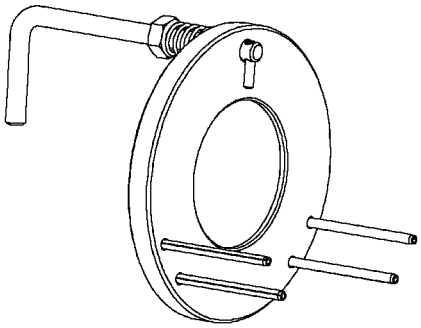

HOLDER SECONDARY CAMSHAFT CHAIN 8429

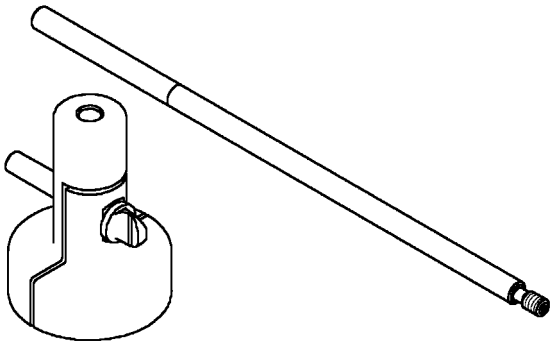

INSTALLER - REMOVER - COUNTER BALANCE SHAFT 8641

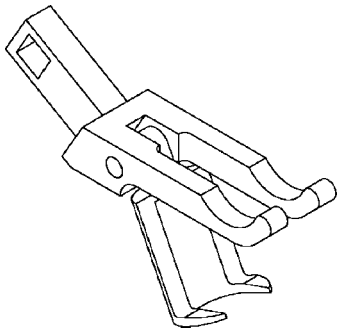

Remover, Rocker Arm 8516

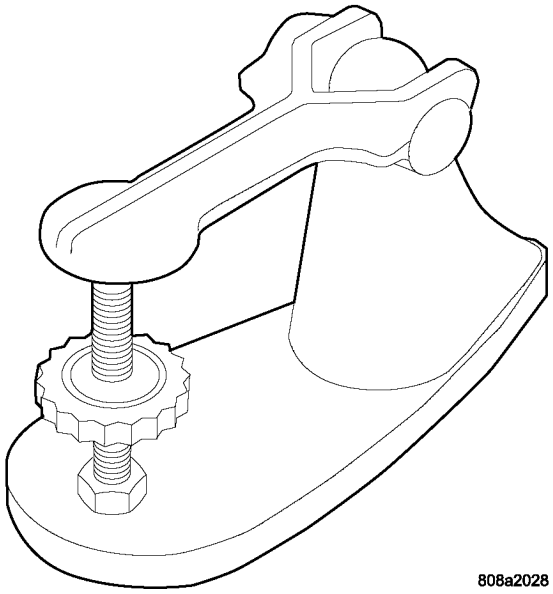

Valve Spring Tester C-647

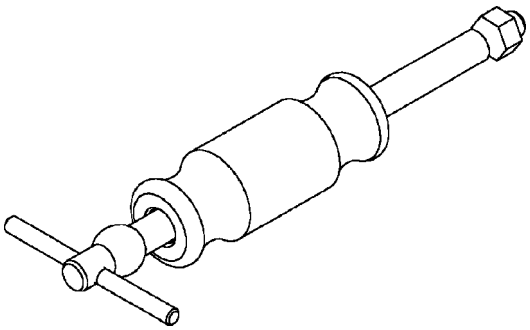

Idler Shaft Remover 8517

ENGINE - 3.7L (Continued)

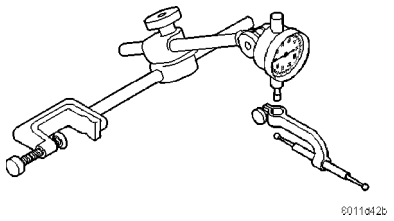

Dial Indicator C-3339

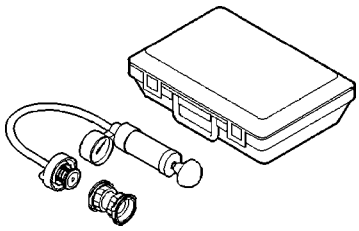

Pressure Tester Kit 7700

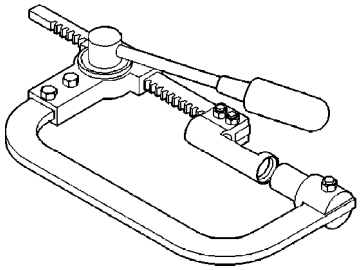

COMPRESSOR VALVE SPRING C-3422-C

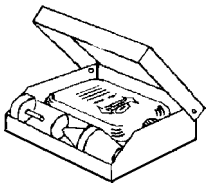

Bloc–Chek–Kit C-3685–A

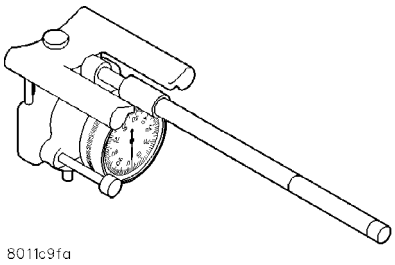

Bore Size Indicator C-119

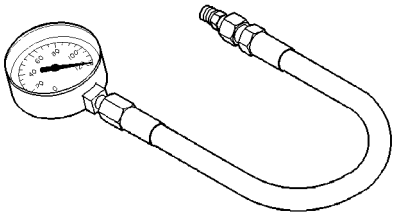

GAUGE OIL PRESSURE - C-3292

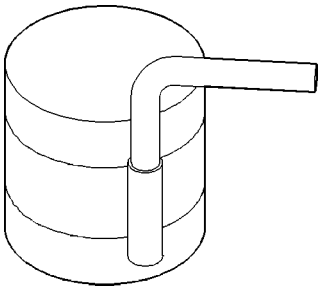

Piston Ring Compressor C-385

AIR CLEANER ELEMENT

REMOVAL - 3.7L

Housing removal is not necessary for element (filter) replacement.

(1) Pry up 2 spring clips (Fig. 4) from front of housing cover (spring clips retain cover to housing).

(2) Release housing cover from 4 locating tabs located on rear of housing, and remove cover.

(3) Remove air cleaner element (filter) from housing.

(4) Clean inside of housing before replacing element.

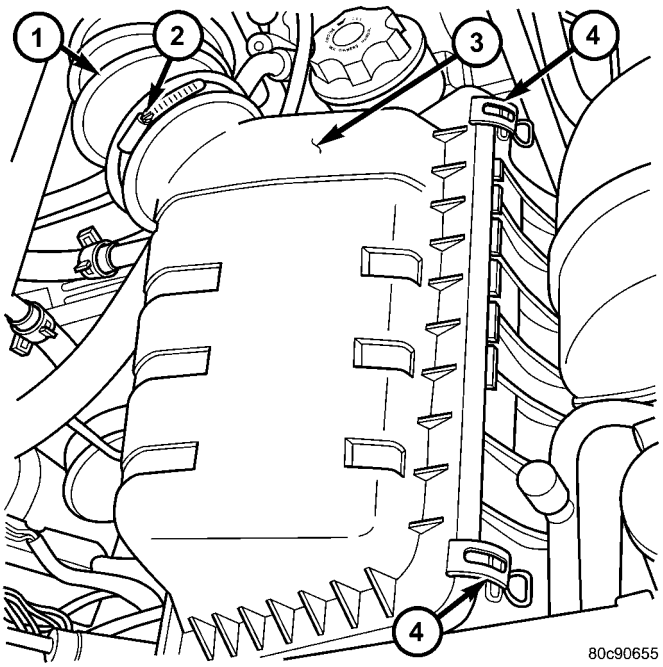

Fig. 4 AIR CLEANER ELEMENT - 3.7L

1 - AIR INTAKE HOSE
2 - HOSE CLAMP
3 - COVER
4 - CLIPS (2)

INSTALLATION - 3.7L

(1) Install element into housing.

(2) Position housing cover into housing locating tabs.

(3) Pry up spring clips and lock cover to housing.

If any air filter, air resonator, air intake tubes or air filter housing clamps had been loosened or removed, tighten them to 5 N·m (40 in. lbs.) torque.

CYLINDER HEAD - LEFT

DESCRIPTION - VALVE GUIDES

The valve guides are made of powered metal and are pressed into the cylinder head. The guides are not replaceable or serviceable, and valve guide reaming is not recommended. If the guides are worn beyond acceptable limits, replace the cylinder heads.

DIAGNOSIS AND TESTING

DIAGNOSIS AND TESTING - HYDRAULIC LASH ADJUSTER

A tappet-like noise may be produced from several items. Check the following items.

(1) Engine oil level too high or too low. This may cause aerated oil to enter the adjusters and cause them to be spongy.

(2) Insufficient running time after rebuilding cylinder head. Low speed running up to 1 hour may be required.

(3) Turn engine off and let set for a few minutes before restarting. Repeat this several times after engine has reached normal operating temperature.

(4) Low oil pressure.

(5) The oil restrictor in cylinder head gasket or the oil passage to the cylinder head is plugged with debris.

(6) Air ingested into oil due to broken or cracked oil pump pick up.

(7) Worn valve guides.

(8) Rocker arm ears contacting valve spring retainer.

(9) Rocker arm loose, adjuster stuck or at maximum extension and still leaves lash in the system.

(10) Oil leak or excessive cam bore wear in cylinder head.

(11) Faulty lash adjuster.

a. Check lash adjusters for sponginess while installed in cylinder head and cam on camshaft at base circle. Depress part of rocker arm over adjuster. Normal adjusters should feel firm when pressed quickly. When pressed very slowly, lash adjusters should collapse.

b. Remove suspected lash adjusters, and replace.

c. Before installation, make sure adjusters are full of oil. This can be verified by little plunger travel when lash adjuster is depressed quickly.

CYLINDER HEAD GASKET

A cylinder head gasket leak can be located between adjacent cylinders or between a cylinder and the adjacent water jacket.

Possible indications of the cylinder head gasket leaking between adjacent cylinders are:

- Loss of engine power
- Engine misfiring
- Poor fuel economy

CYLINDER HEAD - LEFT (Continued)

Possible indications of the cylinder head gasket leaking between a cylinder and an adjacent water jacket are:

- Engine overheating
- Loss of coolant
- Excessive steam (white smoke) emitting from exhaust
- Coolant foaming

CYLINDER-TO-CYLINDER LEAKAGE TEST

To determine if an engine cylinder head gasket is leaking between adjacent cylinders, follow the procedures in Cylinder Compression Pressure Test (Refer to 9 - ENGINE - DIAGNOSIS AND TESTING). An engine cylinder head gasket leaking between adjacent cylinders will result in approximately a 50 - 70% reduction in compression pressure.

CYLINDER-TO-WATER JACKET LEAKAGE TEST

WARNING: USE EXTREME CAUTION WHEN THE ENGINE IS OPERATING WITH COOLANT PRESSURE CAP REMOVED.

VISUAL TEST METHOD

With the engine cool, remove the coolant pressure cap. Start the engine and allow it to warm up until thermostat opens.

If a large combustion/compression pressure leak exists, bubbles will be visible in the coolant.

COOLING SYSTEM TESTER METHOD

WARNING: WITH COOLING SYSTEM TESTER IN PLACE, PRESSURE WILL BUILD UP FAST. EXCESSIVE PRESSURE BUILT UP, BY CONTINUOUS ENGINE OPERATION, MUST BE RELEASED TO A SAFE PRESSURE POINT. NEVER PERMIT PRESSURE TO EXCEED 138 kPa (20 psi).

Install Cooling System Tester 7700 or equivalent to pressure cap neck. Start the engine and observe the tester's pressure gauge. If gauge pulsates with every power stroke of a cylinder a combustion pressure leak is evident.

CHEMICAL TEST METHOD

Combustion leaks into the cooling system can also be checked by using Bloc-Chek Kit C-3685-A or equivalent. Perform test following the procedures supplied with the tool kit.

REMOVAL

(1) Disconnect the negative cable from the battery.
(2) Raise the vehicle on a hoist.
(3) Disconnect the exhaust pipe at the left side exhaust manifold.
(4) Drain the engine coolant. Refer to COOLING SYSTEM.
(5) Lower the vehicle.
(6) Remove the intake manifold. Refer to procedure in this section.
(7) Remove the cylinder head cover. Refer to procedure in this section.
(8) Remove the fan shroud and fan blade assembly. Refer to COOLING SYSTEM.
(9) Remove accessory drive belt. Refer to COOLING SYSTEM.
(10) Remove the power steering pump and set aside.
(11) Rotate the crankshaft until the damper timing mark is aligned with TDC indicator mark (Fig. 5).

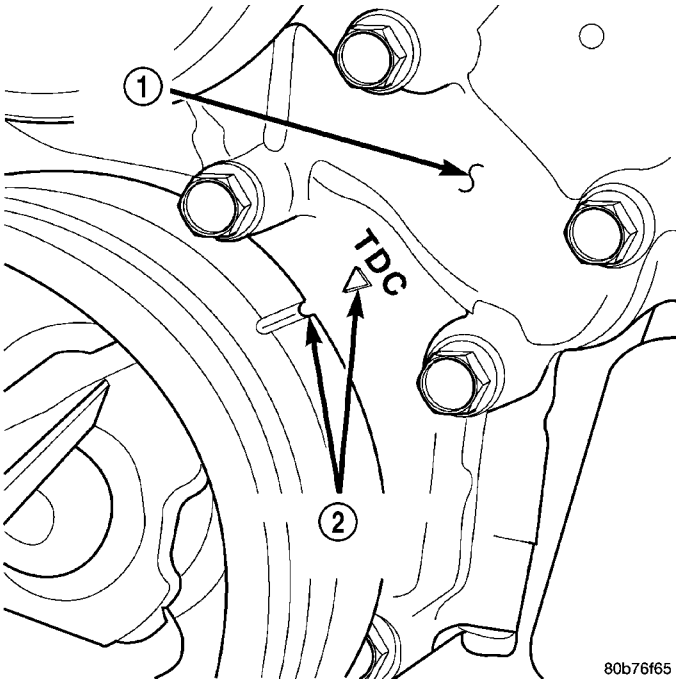

Fig. 5 Engine Top Dead Center

1 - TIMING CHAIN COVER
2 - CRANKSHAFT TIMING MARKS

(12) Verify the V6 mark on the camshaft sprocket is at the 12 o'clock position (Fig. 6). Rotate the crankshaft one turn if necessary.
(13) Remove the crankshaft damper. Refer to Procedure.
(14) Remove the timing chain cover. Refer to procedure.
(15) Lock the secondary timing chains to the idler sprocket using Special Tool 8429 Timing Chain Holding Fixture (Fig. 7).

NOTE: Mark the secondary timing chain prior to removal to aid in installation.

CYLINDER HEAD - LEFT (Continued)

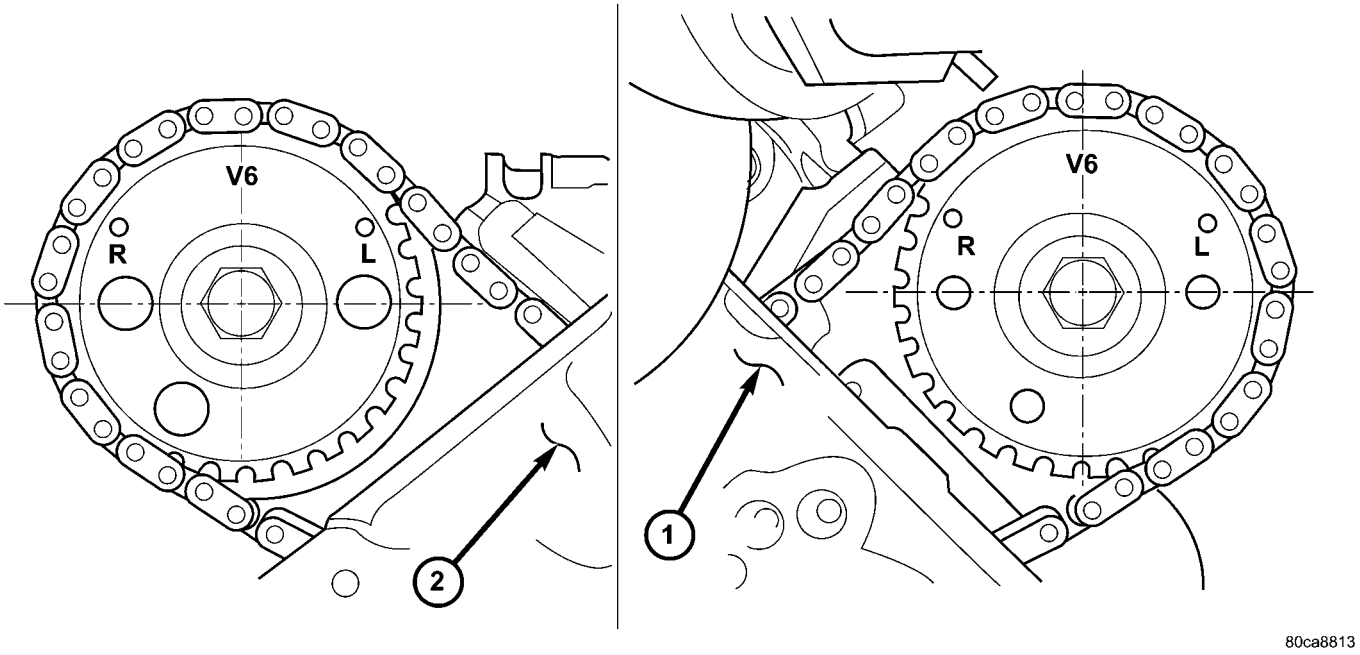

Fig. 6 CAMSHAFT SPROCKET V6 MARKS (#1 TDC, Exhaust stroke)

1 - LEFT CYLINDER HEAD
2 - RIGHT CYLINDER HEAD

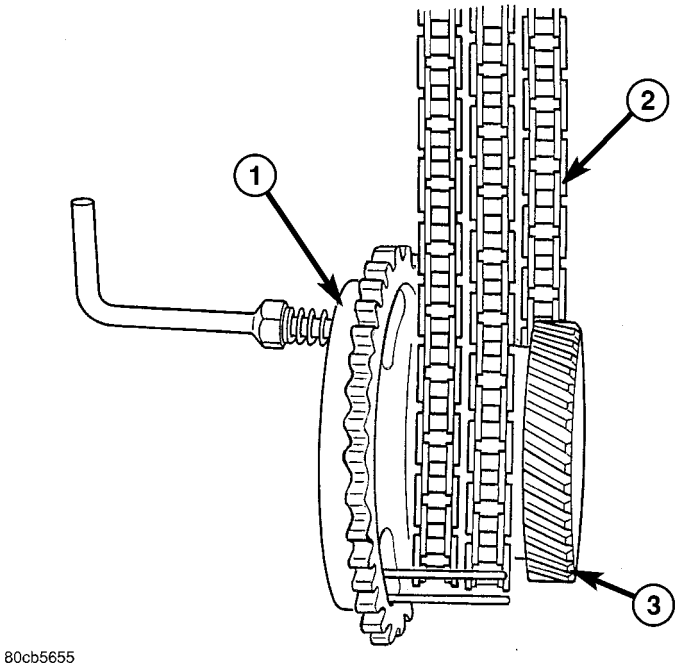

Fig. 7 Using Special Tool 8429

1 - SPECIAL TOOL 8429
2 - CAMSHAFT CHAIN
3 - CRANKSHAFT TIMING GEAR

(16) Mark the secondary timing chain, one link on each side of the V6 mark on the camshaft drive gear.

(17) Remove the left side secondary chain tensioner. Refer to Timing Chain and Sprockets.

(18) Remove the cylinder head access plug (Fig. 8).

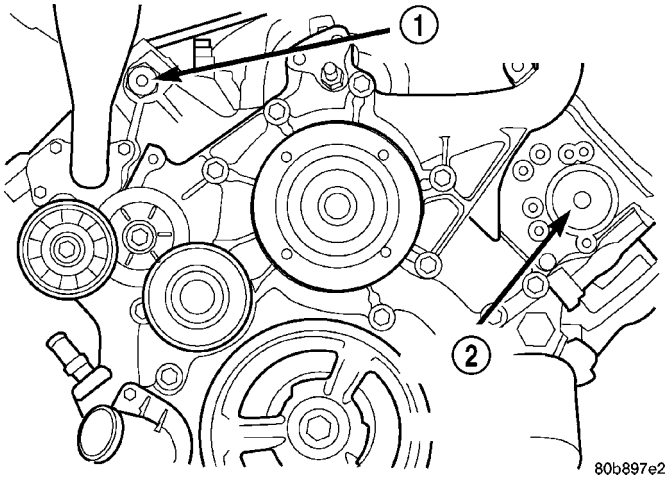

Fig. 8 Cylinder Head Access Plugs

1 - RIGHT CYLINDER HEAD ACCESS PLUG
2 - LEFT CYLINDER HEAD ACCESS PLUG

(19) Remove the left side secondary chain guide. Refer to Timing Chain and Sprockets.

(20) Remove the retaining bolt and the camshaft drive gear.

CAUTION: Do not allow the engine to rotate. Severe damage to the valve train can occur.

CYLINDER HEAD - LEFT (Continued)

CAUTION: Do not overlook the four smaller bolts at the front of the cylinder head. Do not attempt to remove the cylinder head without removing these four bolts.

NOTE: The cylinder head is attached to the cylinder block with twelve bolts.

(21) Remove the cylinder head retaining bolts.
(22) Remove the cylinder head and gasket. Discard the gasket.

CAUTION: Do not lay the cylinder head on its gasket sealing surface, due to the design of the cylinder head gasket any distortion to the cylinder head sealing surface may prevent the gasket from properly sealing resulting in leaks.

CLEANING

To ensure engine gasket sealing, proper surface preparation must be performed, especially with the use of aluminum engine components (Fig. 9). (Refer to 9 - ENGINE - STANDARD PROCEDURE)

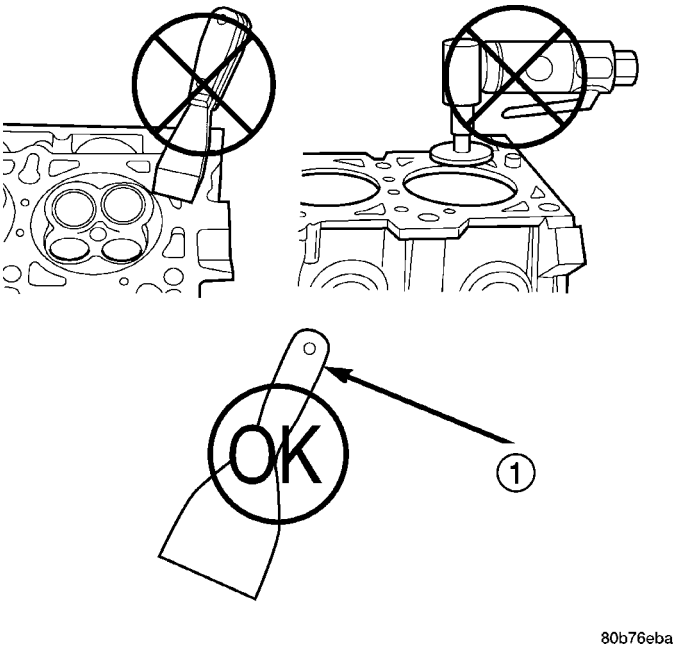

Fig. 9 Proper Tool Usage For Surface Preparation

1 - PLASTIC/WOOD SCRAPER

INSTALLATION

NOTE: The cylinder head bolts are tightened using a torque plus angle procedure. The bolts must be examined BEFORE reuse. If the threads are necked down the bolts should be replaced.

Necking can be checked by holding a straight edge against the threads. If all the threads do not contact the scale, the bolt should be replaced (Fig. 10).

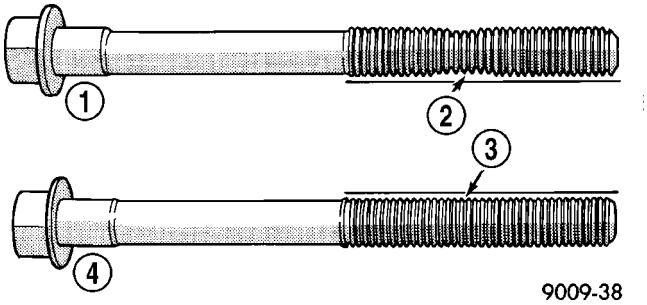

Fig. 10 Checking Cylinder Head Bolts for Stretching (Necking)

1 - STRETCHED BOLT
2 - THREADS ARE NOT STRAIGHT ON LINE
3 - THREADS ARE STRAIGHT ON LINE
4 - UNSTRETCHED BOLT

CAUTION: When cleaning cylinder head and cylinder block surfaces, DO NOT use a metal scraper because the surfaces could be cut or ground. Use only a wooden or plastic scraper.

(1) Clean the cylinder head and cylinder block mating surfaces (Fig. 11).

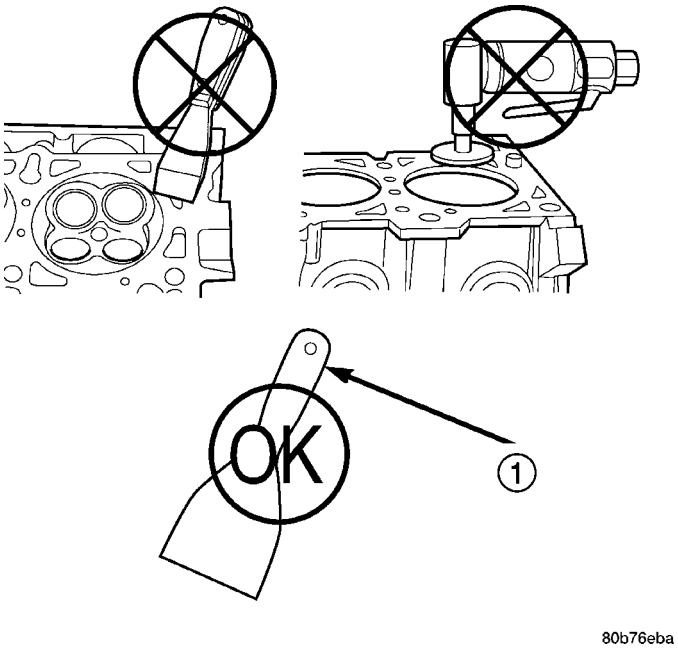

Fig. 11 Proper Tool Usage For Surface Preparation

1 - PLASTIC/WOOD SCRAPER

(2) Position the new cylinder head gasket on the locating dowels.

CAUTION: When installing cylinder head, use care not damage the tensioner arm or the guide arm.

CYLINDER HEAD - LEFT (Continued)

(3) Position the cylinder head onto the cylinder block. Make sure the cylinder head seats fully over the locating dowels.

NOTE: The four smaller cylinder head mounting bolts require sealant to be added to them before installing. Failure to do so may cause leaks.

(4) Lubricate the cylinder head bolt threads with clean engine oil and install the eight M11 bolts.

(5) Coat the four M8 cylinder head bolts with **Mopar® Lock and Seal Adhesive** then install the bolts.

NOTE: The cylinder head bolts are tightened using an angle torque procedure, however, the bolts are not a torque-to-yield design.

(6) Tighten the bolts in sequence using the following steps and torque values:

- Step 1: Tighten bolts 1–8, 27 N·m (20 ft. lbs.).
- Step 2: Verify that bolts 1–8, all reached 27 N·m (20 ft. lbs.), by repeating step-1 without loosening the bolts. Tighten bolts 9 thru 12 to 14 N·m (10 ft. lbs.).
- Step 3: Tighten bolts 1–8, 90 degrees (Fig. 12).
- Step 4: Tighten bolts 1–8, 90 degrees, again. Tighten bolts 9–12, 26 N·m (19 ft. lbs.)

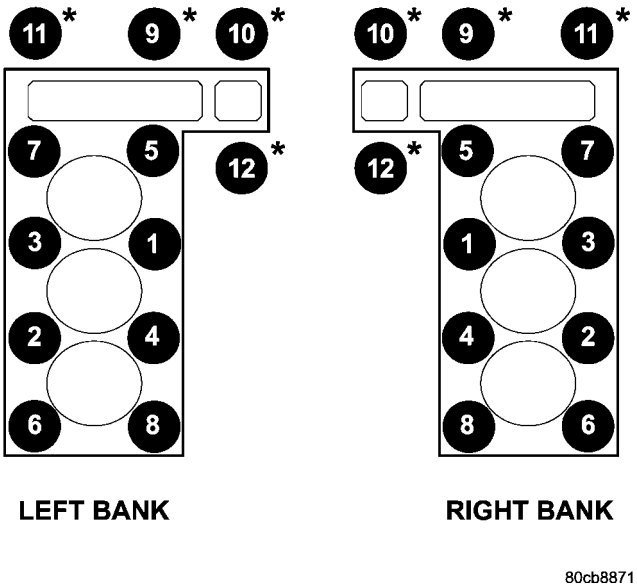

Fig. 12 Cylinder head Tightening Sequence

* - INDICATES SEALANT ON THREADS

(7) Position the secondary chain onto the camshaft drive gear, making sure one marked chain link is on either side of the V6 mark on the gear then using Special Tool 8428 Camshaft Wrench, position the gear onto the camshaft.

CAUTION: Remove excess oil from camshaft sprocket retaining bolt before reinstalling bolt. Failure to do so may cause over-torqueing of bolt resulting in bolt failure.

(8) Install the camshaft drive gear retaining bolt.
(9) Install the left side secondary chain guide.
(10) Install the cylinder head access plug.
(11) Re-set and Install the left side secondary chain tensioner.
(12) Remove Special Tool 8429.
(13) Install the timing chain cover.
(14) Install the crankshaft damper. Tighten damper bolt 175 N·m (130 Ft. Lbs.).
(15) Install the power steering pump.
(16) Install the fan blade assembly and fan shroud.
(17) Install the cylinder head cover.
(18) Install the intake manifold.
(19) Refill the cooling system
(20) Raise the vehicle.
(21) Install the exhaust pipe onto the left exhaust manifold.
(22) Lower the vehicle.
(23) Connect the negative cable to the battery.
(24) Start the engine and check for leaks.

CAMSHAFT

DESCRIPTION

The camshafts consist of powdered metal steel lobes which are sinter-bonded to a steel tube. Four bearing journals are machined into the camshaft. Camshaft end play is controlled by two thrust walls that border the nose piece journal.

REMOVAL

CAUTION: When the timing chain is removed and the cylinder heads are still installed, DO NOT forcefully rotate the camshafts or crankshaft independently of each other. Severe valve and/or piston damage can occur.

CAUTION: When removing the cam sprocket, timing chains or camshaft, Failure to use Special Tool 8379 will result in hydraulic tensioner ratchet over extension, requiring timing chain cover removal to reset the tensioner ratchet.

(1) Remove cylinder head cover (Refer to 9 - ENGINE/CYLINDER HEAD/CYLINDER HEAD COVER(S) - REMOVAL).
(2) Set engine to TDC cylinder #1, camshaft sprocket V6 marks at the 12 o'clock position.

CAMSHAFT (Continued)

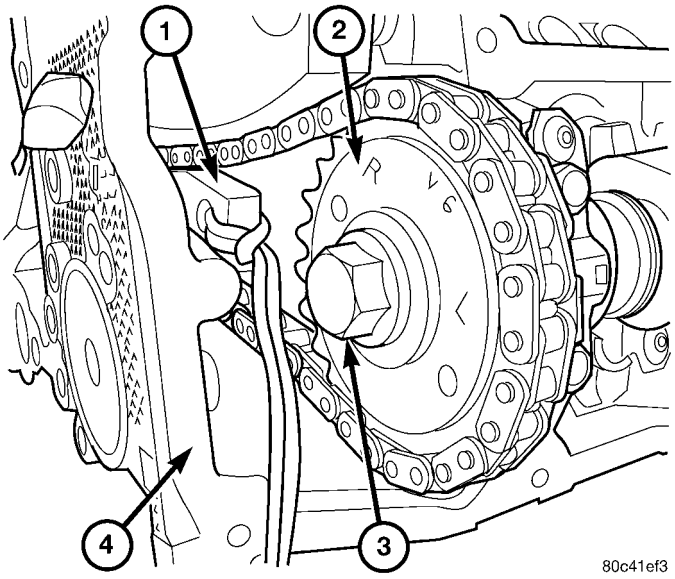

Fig. 13 SECURING TIMING CHAIN TENSIONERS USING TIMING CHAIN WEDGE - Typical

1 - SPECIAL TOOL 8379
2 - CAMSHAFT SPROCKET
3 - CAMSHAFT SPROCKET BOLT
4 - CYLINDER HEAD

(3) Mark one link on the secondary timing chain on both sides of the V6 mark on the camshaft sprocket to aid in installation.

CAUTION: Do not hold or pry on the camshaft target wheel (Located on the right side camshaft sprocket) for any reason, Severe damage will occur to the target wheel resulting in a vehicle no start condition.

(4) Loosen but **DO NOT** remove the camshaft sprocket retaining bolt. Leave the bolt snug against the sprocket.

NOTE: The timing chain tensioners must be secured prior to removing the camshaft sprockets. Failure to secure tensioners will allow the tensioners to extend, requiring timing chain cover removal in order to reset tensioners.

CAUTION: Do not force wedge past the narrowest point between the chain strands. Damage to the tensioners may occur.

(5) Position Special Tool 8379 timing chain wedge (Fig. 13)between the timing chain strands, tap the tool to securely wedge the timing chain against the tensioner arm and guide.

(6) Hold the camshaft with Special Tool 8428 Camshaft Wrench (Fig. 14) , while removing the camshaft sprocket bolt and sprocket.

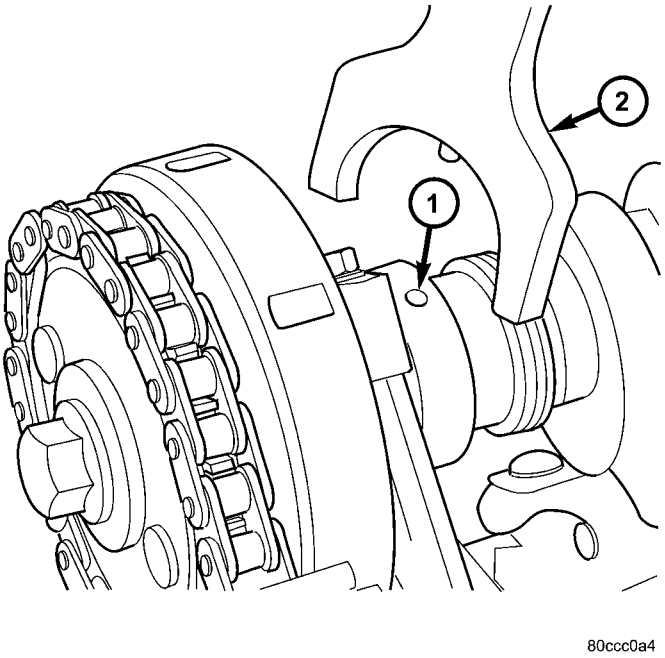

Fig. 14 Special Tool 8428

1 - Camshaft hole
2 - Special Tool 8428

(7) Using Special Tool 8428 Camshaft Wrench, gently allow the camshaft to rotate 5° clockwise until the camshaft is in the neutral position (no valve load).

(8) Starting at the outside working inward, loosen the camshaft bearing cap retaining bolts 1/2 turn at a time. Repeat until all load is off the bearing caps.

CAUTION: DO NOT STAMP OR STRIKE THE CAMSHAFT BEARING CAPS. SEVERE DAMAGE WILL OCCUR TO THE BEARING CAPS.

NOTE: When the camshaft is removed the rocker arms may slide downward, mark the rocker arms before removing camshaft.

(9) Remove the camshaft bearing caps and the camshaft.

INSTALLATION

(1) Lubricate camshaft journals with clean engine oil.

NOTE: Position the left side camshaft so that the camshaft sprocket dowel is near the 1 o'clock position, This will place the camshaft at the neutral position easing the installation of the camshaft bearing caps.

(2) Position the camshaft into the cylinder head.

CAMSHAFT (Continued)

(3) Install the camshaft bearing caps, hand tighten the retaining bolts.

NOTE: Caps should be installed so that the stamped numbers on the caps are in numerical order, (1 thru 4) from the front to the rear of the engine. All caps should be installed so that the stamped arrows on the caps point toward the front of the engine.

(4) Working in ½ turn increments, tighten the bearing cap retaining bolts starting with the middle cap working outward (Fig. 15).

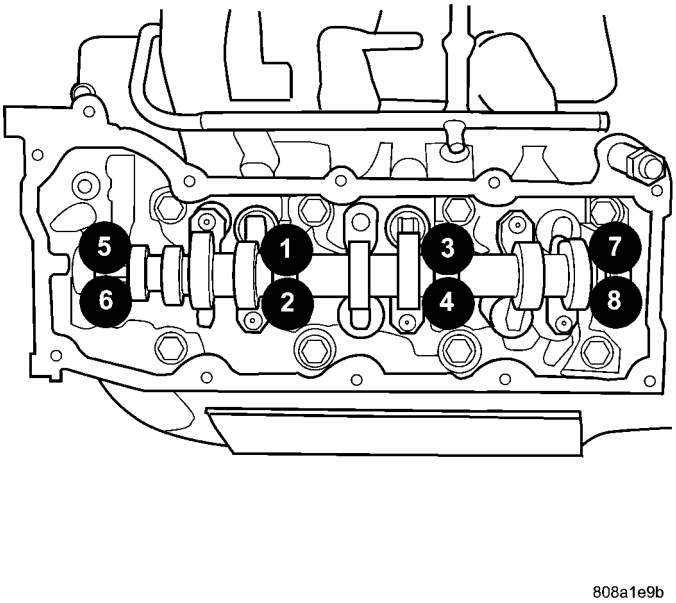

Fig. 15 Camshaft Bearing Caps Tightening Sequence

(5) Torque the camshaft bearing cap retaining bolts to 11 N·m (100 in. lbs.).

(6) Position the camshaft drive gear into the timing chain aligning the V6 mark between the two marked chain links (Two links marked during removal).

(7) Using Special Tool 8428 Camshaft Wrench, rotate the camshaft until the camshaft sprocket dowel is aligned with the slot in the camshaft sprocket. Install the sprocket onto the camshaft.

CAUTION: Remove excess oil from camshaft sprocket bolt. Failure to do so can cause bolt over-torque resulting in bolt failure.

(8) Remove excess oil from bolt, then install the camshaft sprocket retaining bolt and hand tighten.

(9) Remove Special Tool 8379 timing chain wedge.

(10) Using Special Tool 6958 spanner wrench with adapter pins 8346, torque the camshaft sprocket retaining bolt to 122 N·m (90 ft. lbs.).

(11) Install the cylinder head cover.

COVER - CYLINDER HEAD

DESCRIPTION

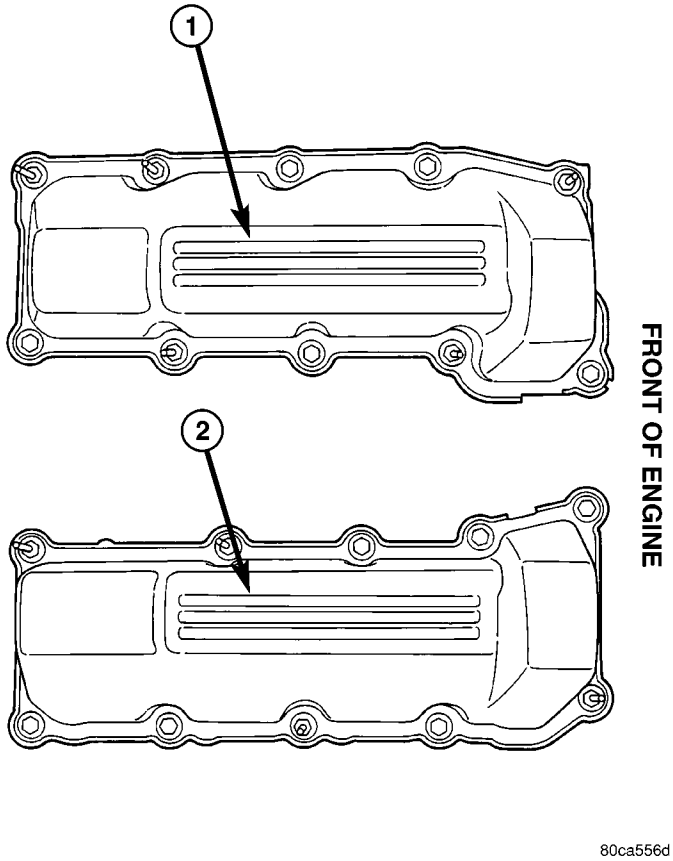

Fig. 16 CYLINDER HEAD COVERS

1 - LEFT SIDE CYLINDER HEAD COVER
2 - RIGHT SIDE CYLINDER HEAD COVER

The cylinder head covers (Fig. 16)(1,2) are made of glass re-enforced thermoset plastic, and are not interchangable from side-to-side.

REMOVAL

(1) Disconnect negative cable from battery.

(2) Remove the resonator assemble and air inlet hose.

(3) Disconnect injector connectors and un-clip the injector harness.

(4) Route injector harness in front of cylinder head cover.

(5) Disconnect the left side breather tube and remove the breather tube.

COVER - CYLINDER HEAD (Continued)

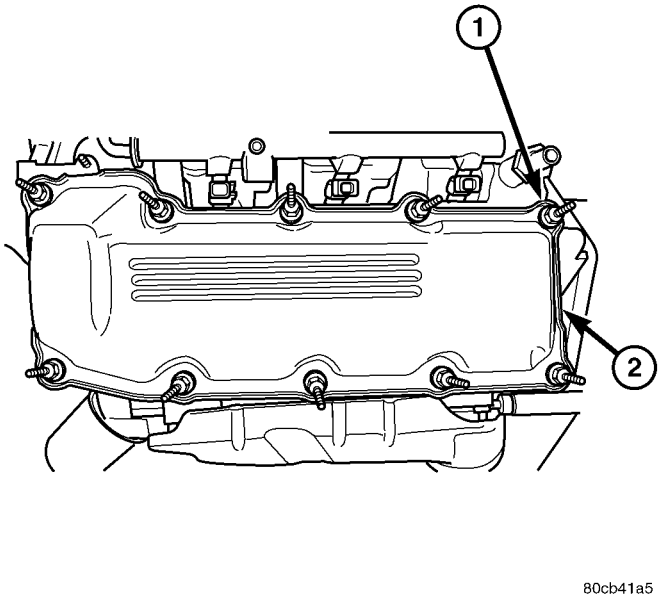

Fig. 17 CYLINDER HEAD COVER - TYPICAL

1 - SCREWS
2 - CYLINDER HEAD COVER

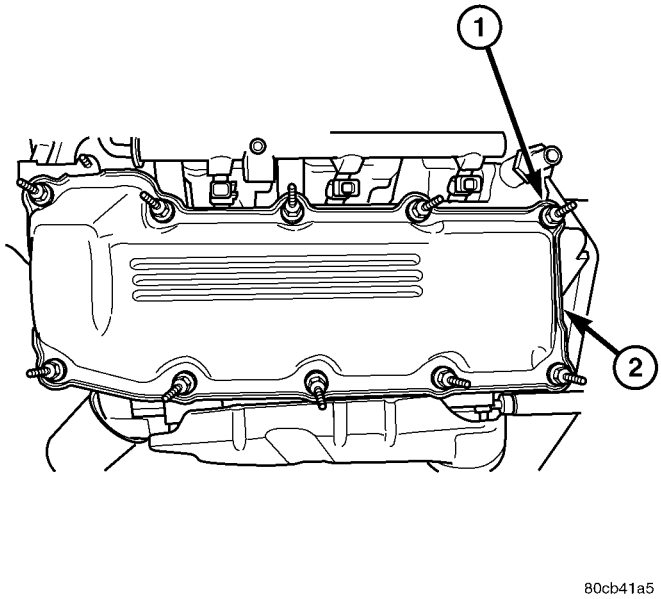

Fig. 18 CYLINDER HEAD COVER - TYPICAL

1 - SCREWS
2 - CYLINDER HEAD COVER

(6) Remove the cylinder head cover mounting bolts (1).

(7) Remove cylinder head cover (1) and gasket (Fig. 17).

NOTE: The gasket may be used again, providing no cuts, tears, or deformation has occurred.

INSTALLATION

CAUTION: Do not use harsh cleaners to clean the cylinder head covers. Severe damage to covers may occur.

NOTE: The gasket may be used again, provided no cuts, tears, or deformation has occurred.

(1) Clean cylinder head cover and both sealing surfaces. Inspect and replace gasket as necessary.

(2) Install cylinder head cover (Fig. 18)(2).

(3) Tighten cylinder head cover bolts (1) and double ended studs to 12 N·m (105 in. lbs.).

(4) Install left side breather and connect breather tube.

(5) Connect injector electrical connectors and injector harness retaining clips.

(6) Install the resonator and air inlet hose.

(7) Connect negative cable to battery.

INTAKE/EXHAUST VALVES & SEATS

DESCRIPTION

The valves are made of heat resistant steel and have chrome plated stems to prevent scuffing. Each valve is actuated by a roller rocker arm which pivots on a stationary lash adjuster. All valves use three bead lock keepers to retain the springs and promote valve rotation.

STANDARD PROCEDURE - REFACING

NOTE: Valve seats that are worn or burned can be reworked, provided that correct angle and seat width are maintained. Otherwise the cylinder head must be replaced.

NOTE: When refacing valves and valve seats, it is important that the correct size valve guide pilot be used for reseating stones. A true and complete surface must be obtained.

(1) Using a suitable dial indicator measure the center of the valve seat Total run out must not exceed 0.051 mm (0.002 in).

(2) Apply a small amount of Prussian blue to the valve seat, insert the valve into the cylinder head, while applying light pressure on the valve rotate the

INTAKE/EXHAUST VALVES & SEATS (Continued)

valve. Remove the valve and examine the valve face. If the blue is transferred below the top edge of the valve face, lower the valve seat using a 15 degree stone. If the blue is transferred to the bottom edge of the valve face, raise the valve seat using a 65 degree stone.

(3) When the seat is properly positioned the width of the intake seat must be 1.75 – 2.36 mm (0.0689 – 0.0928 in.) and the exhaust seat must be 1.71 – 2.32 mm (0.0673 – 0.0911 in.).

(4) Check the valve spring installed height after refacing the valve and seat. The installed height for both intake and exhaust valve springs must not exceed 40.74 mm (1.6039 in.).

(5) The valve seat and valve face must maintain a face angle of 44.5 – 45 degrees angle (Fig. 19).

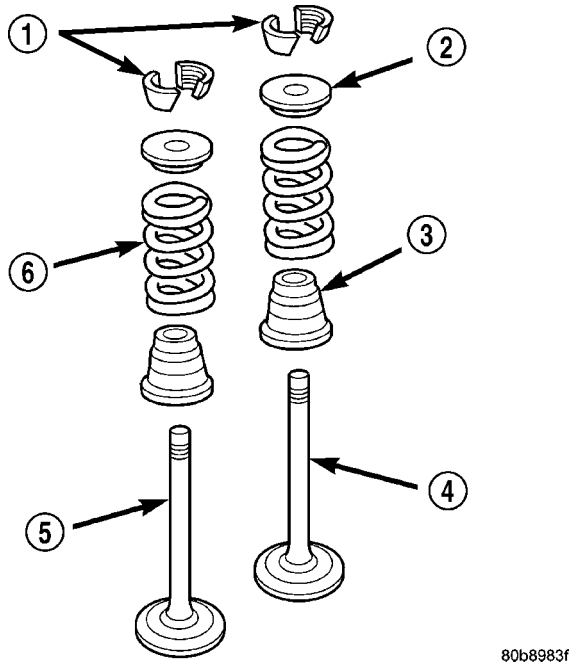

Fig. 19 Valve Assembly Configuration

1 - VALVE LOCKS (3–BEAD)
2 - RETAINER
3 - VALVE STEM OIL SEAL
4 - INTAKE VALVE
5 - EXHAUST VALVE
6 - VALVE SPRING

REMOVAL

NOTE: The cylinder heads must be removed in order to perform this procedure.

(1) Remove rocker arms and lash adjusters. Refer to procedures in this section (Fig. 20).

(2) Remove the camshaft bearing caps and the camshaft.

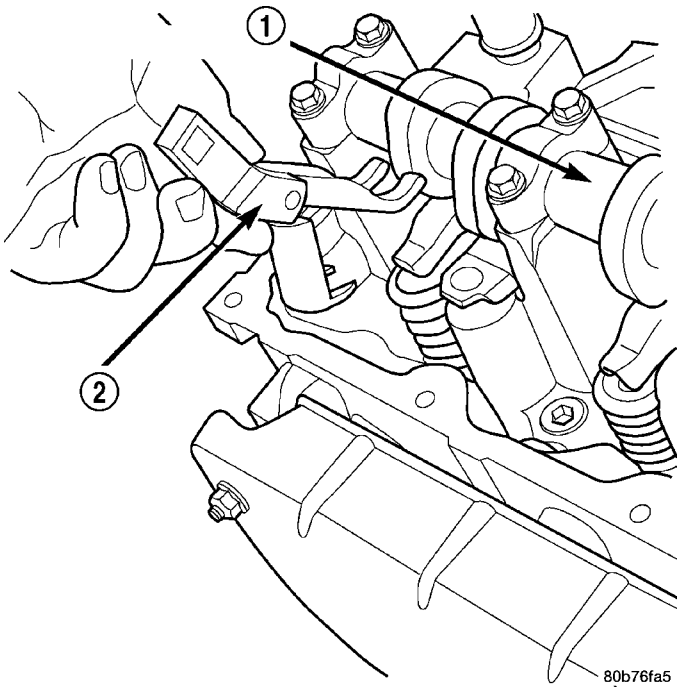

Fig. 20 Rocker Arm Removal

1 - CAMSHAFT
2 - SPECIAL TOOL 8516

NOTE: All six valve springs and valves are removed in the same manner; this procedure only covers one valve and valve spring.

(3) Using Special Tool C-3422–B or C-3422–C Valve Spring Compressor and Special tool 8519 Adapter, compress the valve spring.

NOTE: It may be necessary to tap the top of the valve spring to loosen the spring retainers locks enough to be removed.

(4) Remove the two spring retainer lock halves.

NOTE: the valve spring is under tension use care when releasing the valve spring compressor.

(5) Remove the valve spring compressor.

(6) Remove the spring retainer, and the spring.

NOTE: Check for sharp edges on the keeper grooves. Remove any burrs from the valve stem before removing the valve from the cylinder head.

(7) Remove the valve from the cylinder head.

NOTE: The valve stem seals are common between intake and exhaust.

(8) Remove the valve stem seal. Mark the valve for proper installation.

INTAKE/EXHAUST VALVES & SEATS (Continued)

TESTING VALVE SPRINGS

NOTE: Whenever the valves are removed from the cylinder head it is recommended that the valve springs be inspected and tested for reuse.

Inspect the valve springs for physical signs of wear or damage. Turn table of tool C-647 until surface is in line with the 40.12 mm (1.579 in.) mark on the threaded stud and the zero mark on the front. Place spring over the stud on the table and lift compressing lever to set tone device. Pull on torque wrench until Ping is heard. Take reading on torque wrench at this instant. Multiply this reading by two. This will give the spring load at test length. Fractional measurements are indicated on the table for finer adjustments. Refer to Specifications Section to obtain specified height and allowable tensions. Replace any springs that do not meet specifications (Fig. 21).

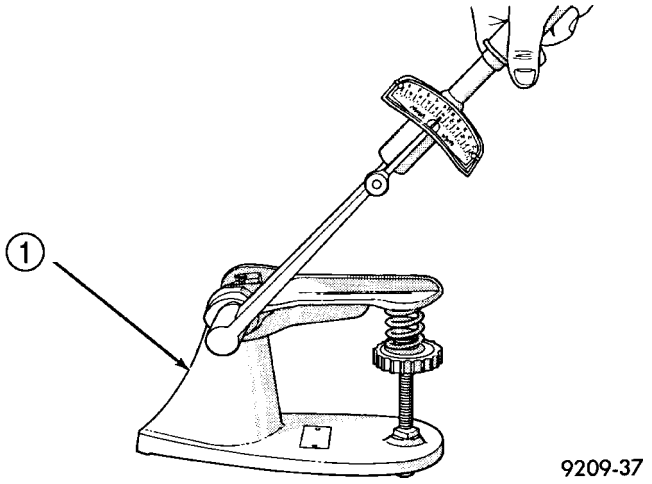

Fig. 21 Testing Valve Springs

1 - SPECIAL TOOL C-647

INSTALLATION

(1) coat the valve stem with clean engine oil and insert it into the cylinder head.

(2) Install the valve stem seal. make sure the seal is fully seated and that the garter spring at the top of the seal is intact.

(3) Install the spring and the spring retainer (Fig. 22).

(4) Using the valve spring compressor, compress the spring and install the two valve spring retainer halves.

(5) Release the valve spring compressor and make sure the two spring retainer halves and the spring retainer are fully seated.

(6) lubricate the camshaft journal with clean engine oil then Position the camshaft (with the sprocket dowel on the left camshaft at 11 o'clock and the right camshaft at 12 o'clock), then position the camshaft bearing caps.

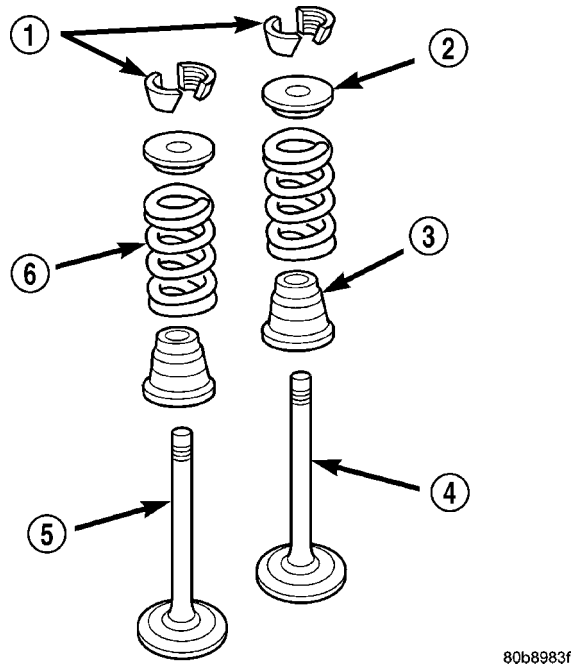

Fig. 22 Valve Assembly Configuration

1 - VALVE LOCKS (3–BEAD)
2 - RETAINER
3 - VALVE STEM OIL SEAL
4 - INTAKE VALVE
5 - EXHAUST VALVE
6 - VALVE SPRING

(7) Install the camshaft bearing cap retaining bolts. Tighten the bolts 9–13 N·m (100 in. lbs.) in ½ turn increments in the sequence shown (Fig. 23).

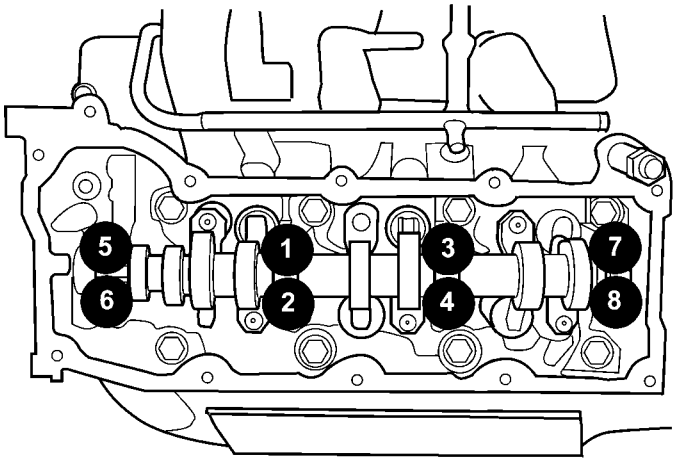

Fig. 23 Camshaft Bearing Caps Tightening Sequence

(8) Position the hydraulic lash adjusters and rocker arms.

ROCKER ARM

DESCRIPTION

The rocker arms are steel stampings with an integral roller bearing. The rocker arms incorporate a 2.8 mm (0.11 inch) oil hole in the lash adjuster socket for roller and camshaft lubrication.

REMOVAL

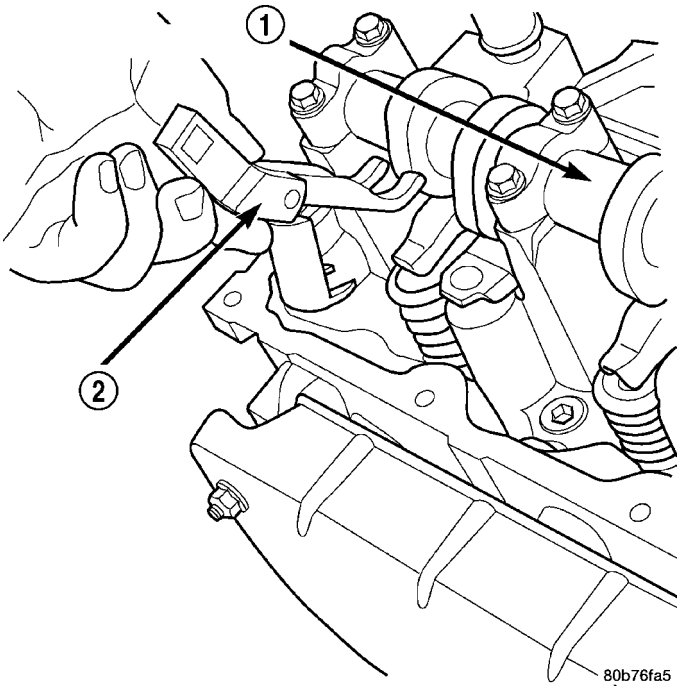

Fig. 24 Rocker Arm - Removal

1 - CAMSHAFT
2 - SPECIAL TOOL 8516

NOTE: Disconnect the battery negative cable to prevent accidental starter engagement.

(1) Remove the cylinder head cover (Refer to 9 - ENGINE/CYLINDER HEAD/CYLINDER HEAD COVER(S) - REMOVAL).

(2) For rocker arm removal on cylinder No. 4, Rotate the crankshaft until cylinder No. 1 is at BDC intake stroke.

(3) For rocker arm removal on cylinder No. 1, Rotate the crankshaft until cylinder No. 1 is at BDC combustion stroke.

(4) For rocker arm removal on cylinders No. 3 and No. 5, Rotate the crankshaft until cylinder No. 1 is at TDC exhaust stroke.

(5) For rocker arm removal on cylinders No. 2 and No. 6, Rotate the crankshaft until cylinder No. 1 is at TDC ignition stroke.

(6) Using special tool 8516 Rocker Arm Remover (Fig. 24)(2) , press downward on the valve spring, remove rocker arm.

SEALS - VALVE GUIDE

DESCRIPTION

The valve guide seals are made of rubber and incorporate an integral steel valve spring seat. The integral garter spring maintains consistent lubrication control to the valve stems.

SPRINGS VALVE

DESCRIPTION

The valve springs are made from high strength chrome silicon steel. The springs are NOT common for intake and exhaust applications. The exhaust spring has an external damper. The valve spring seat is integral with the valve stem seal, which is a positive type seal to control lubrication.

REMOVAL

(1) Remove the cylinder head cover (Refer to 9 - ENGINE/CYLINDER HEAD/CYLINDER HEAD COVER(S) - REMOVAL).

(2) Using Special Tool 8516 Valve Spring Compressor, remove the rocker arms and the hydraulic lash adjusters.

(3) Remove the spark plug for the cylinder the valve spring and seal are to be removed from.

(4) Apply shop air to the cylinder to hold the valves in place when the spring is removed.

NOTE: All six valve springs and seals are removed in the same manner; this procedure only covers one valve seal and valve spring.

(5) Using Special Tool 8387 Valve Spring Compressor, compress the valve spring.

NOTE: It may be necessary to tap the top of the valve spring to loosen the spring retainers locks enough to be removed.

(6) Remove the two spring retainer lock halves.

NOTE: the valve spring is under tension use care when releasing the valve spring compressor.

(7) Remove the valve spring compressor.

NOTE: The valve springs are NOT common between intake and exhaust.

(8) Remove the spring retainer, and the spring.

(9) Remove the valve stem seal.

NOTE: The valve stem seals are common between intake and exhaust.

SPRINGS VALVE (Continued)

INSTALLATION

NOTE: All six valve springs and seals are removed in the same manner; this procedure only covers one valve seal and valve spring.

(1) Apply shop air to the cylinder to hold the valves in place while the spring is installed.

NOTE: The valve stem seals are common between intake and exhaust.

(2) Install the valve stem seal.

NOTE: The valve springs are NOT common between intake and exhaust.

(3) Install the spring retainer, and the spring.
(4) Using Special Tool 8387 Valve Spring Compressor, compress the valve spring.
(5) Install the two spring retainer lock halves.

NOTE: the valve spring is under tension use care when releasing the valve spring compressor.

(6) Remove the valve spring compressor.
(7) Disconnect the shop air to the cylinder.
(8) Install the spark plug for the cylinder the valve spring and seal was installed on.
(9) Using Special Tool 8516 Valve Spring Compressor, install the rocker arms and the hydraulic lash adjusters.
(10) Install the cylinder head cover (Refer to 9 - ENGINE/CYLINDER HEAD/CYLINDER HEAD COVER(S) - INSTALLATION).

CYLINDER HEAD - RIGHT

DESCRIPTION

DESCRIPTION - CYLINDER HEAD

The cylinder heads are made of an aluminum alloy. The cylinder head features two valves per cylinder with pressed in powdered metal valve guides. The cylinder heads also provide enclosures for the timing chain drain, necessitating unique left and right cylinder heads.

DESCRIPTION - VALVE GUIDES

The valve guides are made of powered metal and are pressed into the cylinder head. The guides are not replaceable or serviceable, and valve guide reaming is not recommended. If the guides are worn beyond acceptable limits, replace the cylinder heads.

DESCRIPTION

The valves are made of heat resistant steel and have chrome plated stems to prevent scuffing. Each valve is actuated by a roller rocker arm which pivots on a stationary lash adjuster. All valves use three bead lock keepers to retain the springs and promote valve rotation.

DIAGNOSIS AND TESTING

DIAGNOSIS AND TESTING - HYDRAULIC LASH ADJUSTER

A tappet-like noise may be produced from several items. Check the following items.

(1) Engine oil level too high or too low. This may cause aerated oil to enter the adjusters and cause them to be spongy.
(2) Insufficient running time after rebuilding cylinder head. Low speed running up to 1 hour may be required.
(3) Turn engine off and let set for a few minutes before restarting. Repeat this several times after engine has reached normal operating temperature.
(4) Low oil pressure.
(5) The oil restrictor in cylinder head gasket or the oil passage to the cylinder head is plugged with debris.
(6) Air ingested into oil due to broken or cracked oil pump pick up.
(7) Worn valve guides.
(8) Rocker arm ears contacting valve spring retainer.
(9) Rocker arm loose, adjuster stuck or at maximum extension and still leaves lash in the system.
(10) Oil leak or excessive cam bore wear in cylinder head.
(11) Faulty lash adjuster.
a. Check lash adjusters for sponginess while installed in cylinder head and cam on camshaft at base circle. Depress part of rocker arm over adjuster. Normal adjusters should feel very firm. Spongy adjusters can be bottomed out easily.
b. Remove suspected lash adjusters, and replace.
c. Before installation, make sure adjusters are at least partially full of oil. This can be verified by little or no plunger travel when lash adjuster is depressed.

DIAGNOSIS AND TESTING - CYLINDER HEAD GASKET

A cylinder head gasket leak can be located between adjacent cylinders or between a cylinder and the adjacent water jacket.

Possible indications of the cylinder head gasket leaking between adjacent cylinders are:

- Loss of engine power

CYLINDER HEAD - RIGHT (Continued)

- Engine misfiring
- Poor fuel economy

Possible indications of the cylinder head gasket leaking between a cylinder and an adjacent water jacket are:

- Engine overheating
- Loss of coolant
- Excessive steam (white smoke) emitting from exhaust
- Coolant foaming

CYLINDER-TO-CYLINDER LEAKAGE TEST

To determine if an engine cylinder head gasket is leaking between adjacent cylinders, follow the procedures in Cylinder Compression Pressure Test (Refer to 9 - ENGINE - DIAGNOSIS AND TESTING). An engine cylinder head gasket leaking between adjacent cylinders will result in approximately a 50–70% reduction in compression pressure.

CYLINDER-TO-WATER JACKET LEAKAGE TEST

WARNING: USE EXTREME CAUTION WHEN THE ENGINE IS OPERATING WITH COOLANT PRESSURE CAP REMOVED.

VISUAL TEST METHOD

With the engine cool, remove the coolant pressure cap. Start the engine and allow it to warm up until thermostat opens.

If a large combustion/compression pressure leak exists, bubbles will be visible in the coolant.

COOLING SYSTEM TESTER METHOD

WARNING: WITH COOLING SYSTEM TESTER IN PLACE, PRESSURE WILL BUILD UP FAST. EXCESSIVE PRESSURE BUILT UP, BY CONTINUOUS ENGINE OPERATION, MUST BE RELEASED TO A SAFE PRESSURE POINT. NEVER PERMIT PRESSURE TO EXCEED 138 kPa (20 psi).

Install Cooling System Tester 7700 or equivalent to pressure cap neck. Start the engine and observe the tester's pressure gauge. If gauge pulsates with every power stroke of a cylinder a combustion pressure leak is evident.

CHEMICAL TEST METHOD

Combustion leaks into the cooling system can also be checked by using Bloc-Chek Kit C-3685-A or equivalent. Perform test following the procedures supplied with the tool kit.

REMOVAL

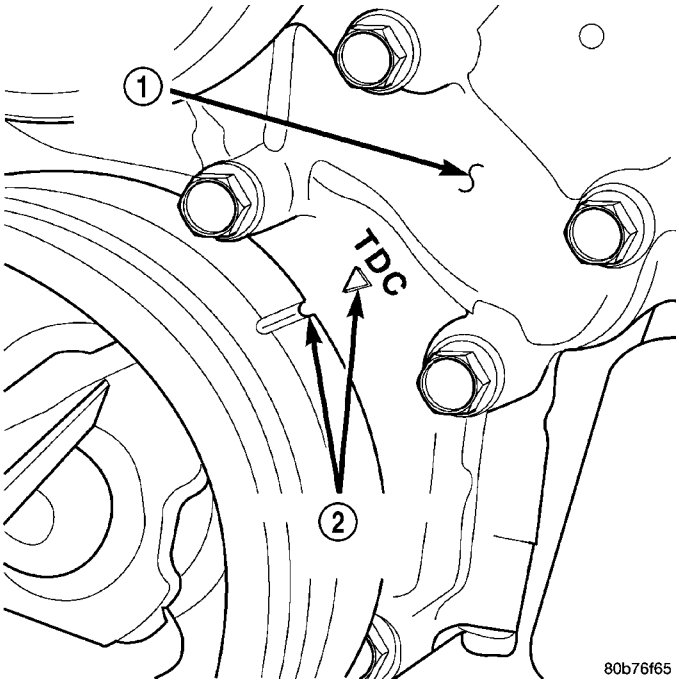

Fig. 25 Engine Top Dead Center (TDC) Indicator Mark

1 - TIMING CHAIN COVER
2 - CRANKSHAFT TIMING MARKS

(1) Disconnect battery negative cable.

(2) Raise the vehicle on a hoist.

(3) Disconnect the exhaust pipe at the right side exhaust manifold.

(4) Drain the engine coolant (Refer to 7 - COOLING - STANDARD PROCEDURE).

(5) Lower the vehicle.

(6) Remove the intake manifold (Refer to 9 - ENGINE/MANIFOLDS/INTAKE MANIFOLD - REMOVAL).

(7) Remove the cylinder head cover (Refer to 9 - ENGINE/CYLINDER HEAD - REMOVAL).

(8) Remove the fan shroud (Refer to 7 - COOLING/ENGINE/RADIATOR FAN - REMOVAL).

(9) Remove oil fill housing from cylinder head.

(10) Remove accessory drive belt (Refer to 7 - COOLING/ACCESSORY DRIVE/DRIVE BELTS - REMOVAL).

(11) Rotate the crankshaft until the damper timing mark is aligned with TDC indicator mark (Fig. 25)(2).

(12) Verify the V6 mark on the camshaft sprocket is at the 12 o'clock position (Fig. 26). Rotate the crankshaft one turn if necessary.

(13) Remove the crankshaft damper (Refer to 9 - ENGINE/ENGINE BLOCK/VIBRATION DAMPER - REMOVAL).

CYLINDER HEAD - RIGHT (Continued)

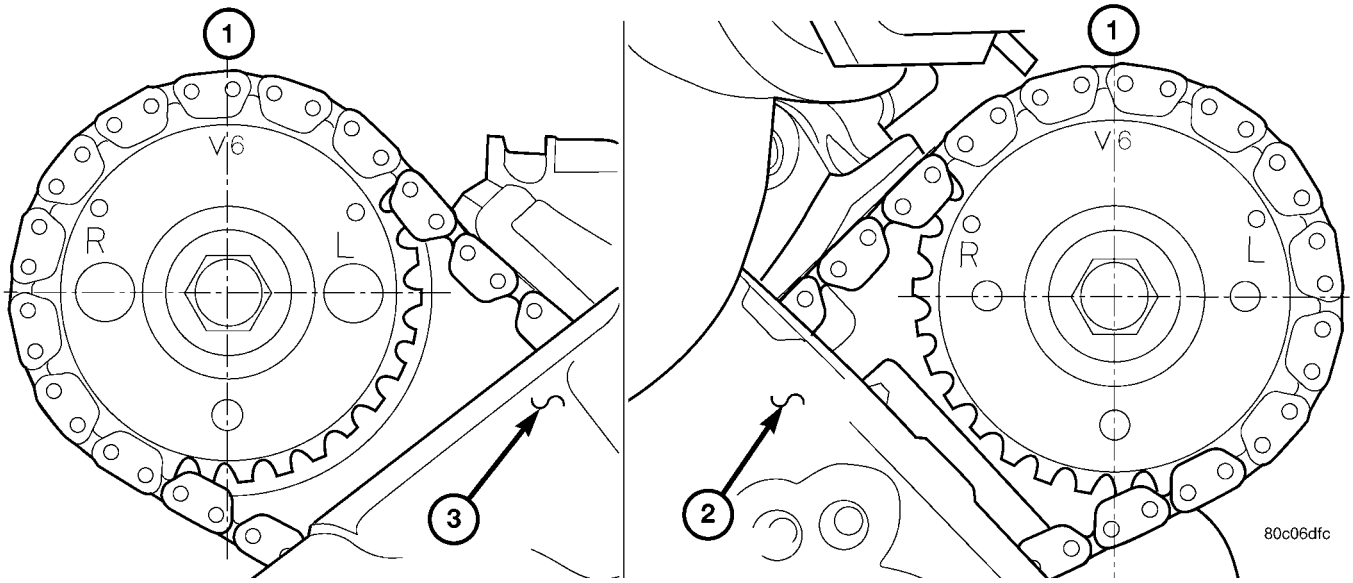

Fig. 26 Camshaft Sprocket V6 Marks

(14) Remove the timing chain cover (Refer to 9 - ENGINE/VALVE TIMING/TIMING BELT / CHAIN COVER(S) - REMOVAL).

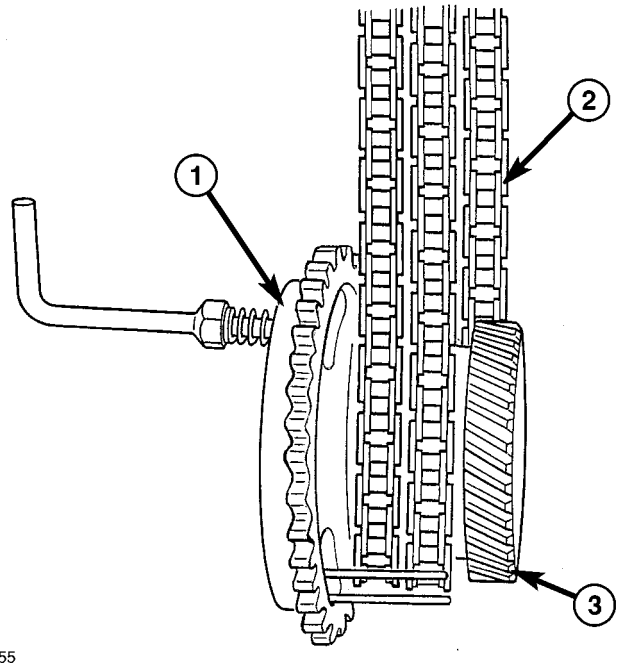

Fig. 27 Using Special Tool 8429

1 - SPECIAL TOOL 8429
2 - CAMSHAFT CHAIN
3 - CRANKSHAFT TIMING GEAR

(15) Lock the secondary timing chains to the idler sprocket using Special Tool 8429 Timing Chain Holding Fixture (Fig. 27)(1).

NOTE: Mark the secondary timing chain prior to removal to aid in installation.

(16) Mark the secondary timing chain, one link on each side of the V6 mark on the camshaft drive gear.

(17) Remove the right side secondary chain tensioner (Refer to 9 - ENGINE/VALVE TIMING/TIMING BELT/CHAIN AND SPROCKETS - REMOVAL).

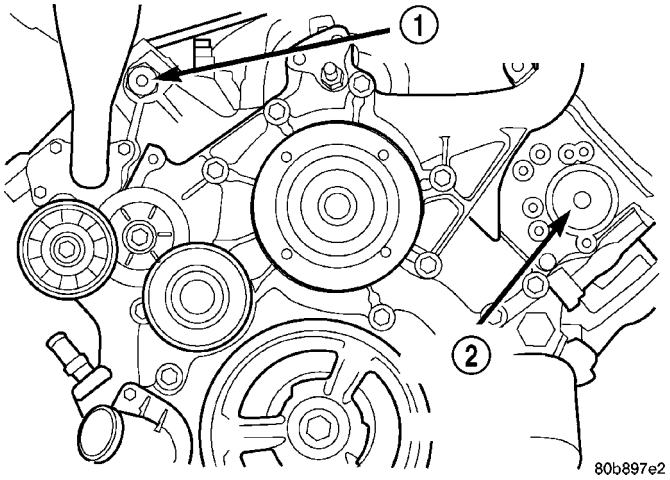

Fig. 28 Cylinder Head Access Plugs

1 - RIGHT CYLINDER HEAD ACCESS PLUG
2 - LEFT CYLINDER HEAD ACCESS PLUG

(18) Remove the cylinder head access plug (Fig. 28)(1,2).

(19) Remove the right side secondary chain guide (Refer to 9 - ENGINE/VALVE TIMING/TIMING BELT/CHAIN AND SPROCKETS - REMOVAL).

CAUTION: The nut on the right side camshaft sprocket should not be removed for any reason, as the sprocket and camshaft sensor target wheel is serviced as an assembly. If the nut was removed, torque nut to 5 N·m (44 in. lbs.).

CYLINDER HEAD - RIGHT (Continued)

(20) Remove the retaining bolt and the camshaft drive gear.

CAUTION: Do not allow the engine to rotate. severe damage to the valve train can occur.

CAUTION: Do not overlook the four smaller bolts at the front of the cylinder head. Do not attempt to remove the cylinder head without removing these four bolts.

CAUTION: Do not hold or pry on the camshaft target wheel for any reason. A damaged target wheel can result in a vehicle no start condition.

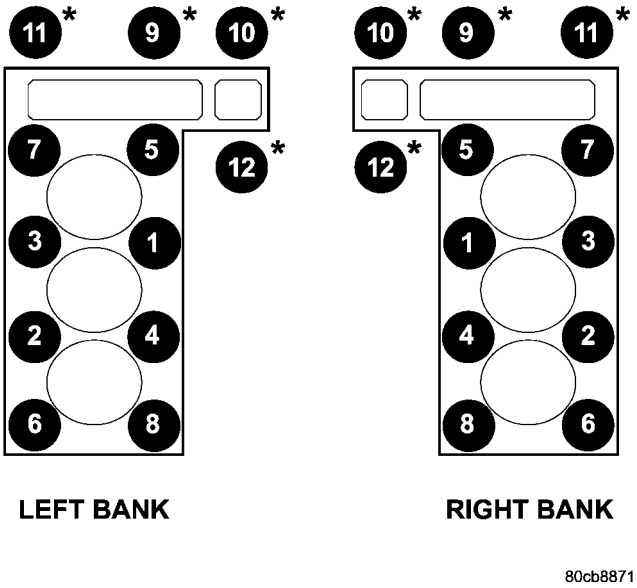

Fig. 29 Cylinder Head Tightening Sequence

* - INDICATES SEALANT ON THREADS

NOTE: The cylinder head is attached to the cylinder block with twelve bolts.

(21) Remove the cylinder head retaining bolts (Fig. 29).

(22) Remove the cylinder head and gasket. Discard the gasket.

CAUTION: Do not lay the cylinder head on its gasket sealing surface, do to the design of the cylinder head gasket any distortion to the cylinder head sealing surface may prevent the gasket from properly sealing resulting in leaks.

CLEANING

To ensure engine gasket sealing, proper surface preparation must be performed, especially with the use of aluminum engine components (Fig. 30). (Refer to 9 - ENGINE - STANDARD PROCEDURE)

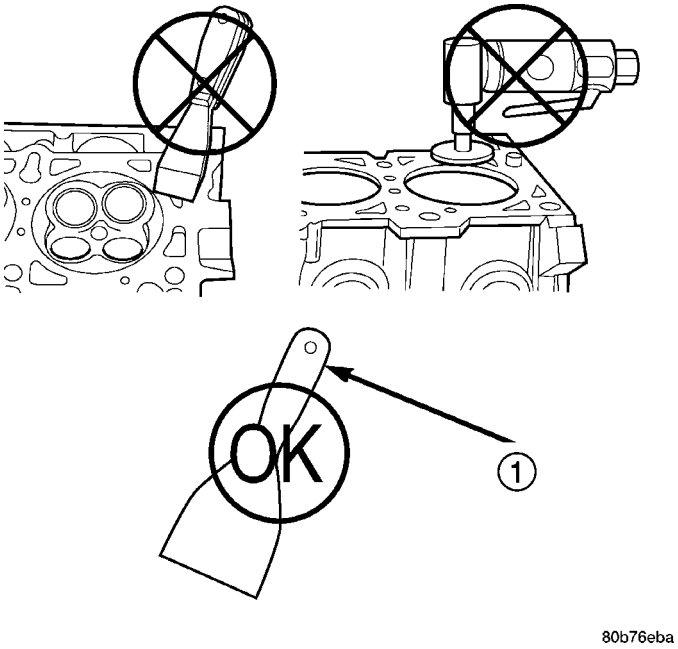

Fig. 30 Proper Tool Usage For Surface Preparation

1 - PLASTIC/WOOD SCRAPER

INSPECTION

(1) Inspect the cylinder head for out-of-flatness, using a straightedge and a feeler gauge. If measurements exceed 0.0508 mm (0.002 in.) replace the cylinder head.

(2) Inspect the valve seats for damage. Service the valve seats as necessary.

(3) Inspect the valve guides for wear, cracks or looseness. If either condition exist, replace the cylinder head.

INSTALLATION

NOTE: The cylinder head bolts are tightened using a torque plus angle procedure. The bolts must be examined BEFORE reuse. If the threads are necked down the bolts should be replaced.

Necking can be checked by holding a straight edge against the threads. If all the threads do not contact the scale, the bolt should be replaced.

CAUTION: When cleaning cylinder head and cylinder block surfaces, DO NOT use a metal scraper because the surfaces could be cut or ground. Use only a wooden or plastic scraper.

CYLINDER HEAD - RIGHT (Continued)

(1) Clean the cylinder head and cylinder block mating surfaces (Fig. 31).

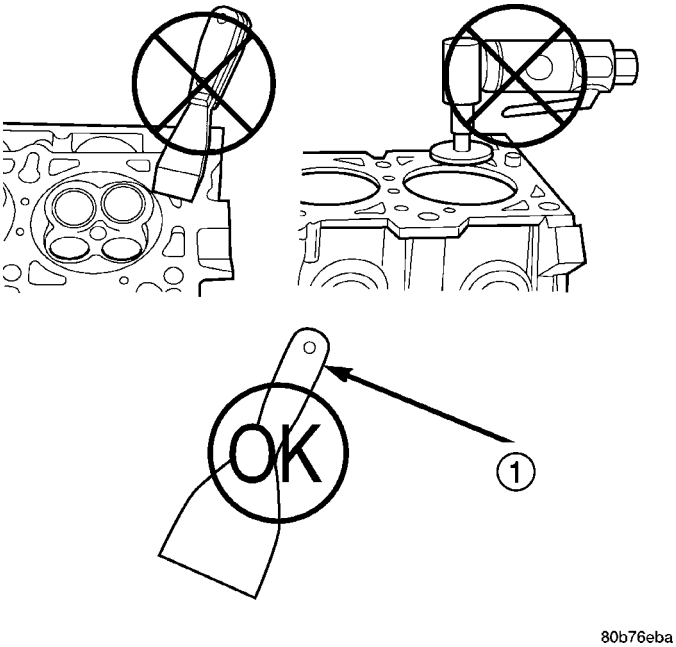

Fig. 31 Proper Tool Usage For Surface Preparation

1 - PLASTIC/WOOD SCRAPER

(2) Position the new cylinder head gasket on the locating dowels.

CAUTION: When installing cylinder head, use care not damage the tensioner arm or the guide arm.

(3) Position the cylinder head onto the cylinder block. Make sure the cylinder head seats fully over the locating dowels.

NOTE: The four M8 cylinder head mounting bolts require sealant to be added to them before installing. Failure to do so may cause leaks.

(4) Lubricate the cylinder head bolt threads with clean engine oil and install the eight M10 bolts.

(5) Coat the four M8 cylinder head bolts with **Mopar Lock and Seal Adhesive** then install the bolts.

NOTE: The cylinder head bolts are tightened using an angle torque procedure, however, the bolts are not a torque-to-yield design.

(6) Tighten the bolts in sequence using the following steps and torque values:

- Step 1: Tighten bolts 1–8, 27 N·m (20 ft. lbs.).
- Step 2: Verify that bolts 1–8, all reached 27 N·m (20 ft. lbs.), by repeating step-1 without loosening the bolts. Tighten bolts 9 thru 12 to 14 N·m (10 ft. lbs.).
- Step 3: Tighten bolts 1–8, 90 degrees (Fig. 32).
- Step 4: Tighten bolts 1–8, 90 degrees, again. Tighten bolts 9–12, 26 N·m (19 ft. lbs.)

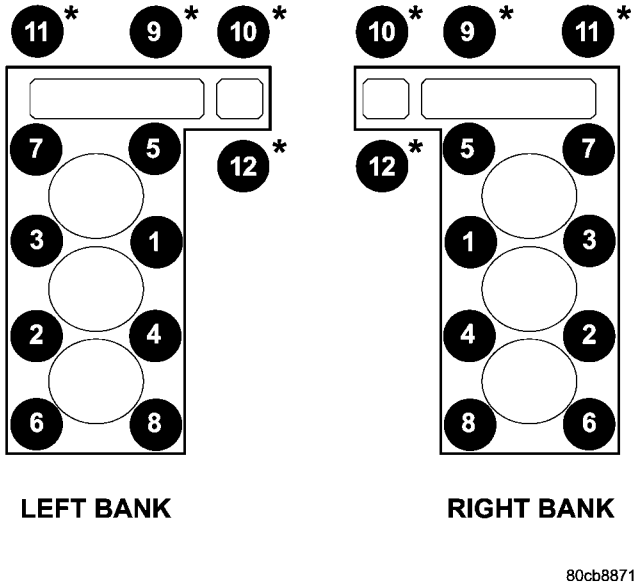

Fig. 32 CYLINDER HEAD TIGHTENING SEQUENCE

* - INDICATES SEALANT ON THREADS

CAUTION: The nut on the right side camshaft sprocket should not be removed for any reason, as the sprocket and camshaft sensor target wheel is serviced as an assembly. If the nut was removed retorque nut to 5 ft. lbs.(60 in. lbs.).

(7) Position the secondary chain onto the camshaft drive gear, making sure one marked chain link is on either side of the V6 mark on the gear then using Special Tool 8428 Camshaft Wrench, position the gear onto the camshaft.

CAUTION: Remove excess oil from camshaft sprocket retaining bolt before reinstalling bolt. Failure to do so may cause over-torquing of bolt resulting in bolt failure.

(8) Install the camshaft drive gear retaining bolt.

(9) Install the right side secondary chain guide.

(10) Install the cylinder head access plug.

(11) Re-set and install the right side secondary chain tensioner.

(12) Remove Special Tool 8429.

(13) Install the timing chain cover.

(14) Install the crankshaft damper. Tighten damper bolt 175 N·m (130 Ft. Lbs.).

(15) Install accessory drive belt.

(16) Install the fan shroud.

(17) Install the cylinder head cover.

CYLINDER HEAD - RIGHT (Continued)

(18) Install the intake manifold.
(19) Install oil fill housing onto cylinder head.
(20) Refill the cooling system.
(21) Raise the vehicle.
(22) Install the exhaust pipe onto the right exhaust manifold.
(23) Lower the vehicle.
(24) Reconnect battery negitive cable.
(25) Start the engine and check for leaks.

CAMSHAFT

DESCRIPTION

The camshafts consist of powdered metal steel lobes which are sinter-bonded to a steel tube. Four bearing journals are machined into the camshaft. Camshaft end play is controlled by two thrust walls that border the nose piece journal.

REMOVAL

CAUTION: When the timing chain is removed and the cylinder heads are still installed, DO NOT forcefully rotate the camshafts or crankshaft independently of each other. Severe valve and/or piston damage can occur.

CAUTION: When removing the cam sprocket, timing chains or camshaft, Failure to use special tool 8379 will result in hydraulic tensioner ratchet over extension, Requiring timing chain cover removal to re-set the tensioner ratchet.

(1) Remove the cylinder head cover (Refer to 9 - ENGINE/CYLINDER HEAD/CYLINDER HEAD COVER(S) - REMOVAL).

(2) Set engine to TDC cylinder No. 1, camshaft sprocket V6 marks at the 12 o'clock position (Fig. 33)(1).

(3) Mark one link on the secondary timing chain on both sides of the V6 mark on the camshaft sprocket to aid in installation.

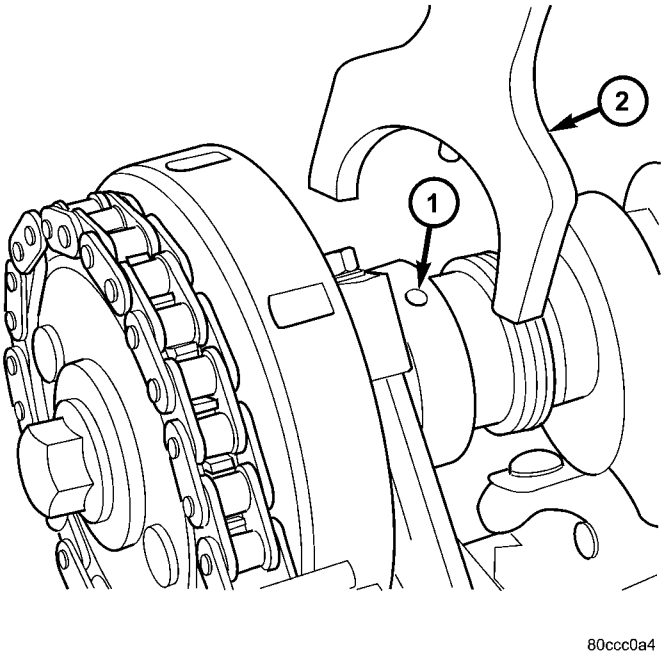

Fig. 34 Special Tool 8428

1 - Camshaft hole
2 - Special Tool 8428

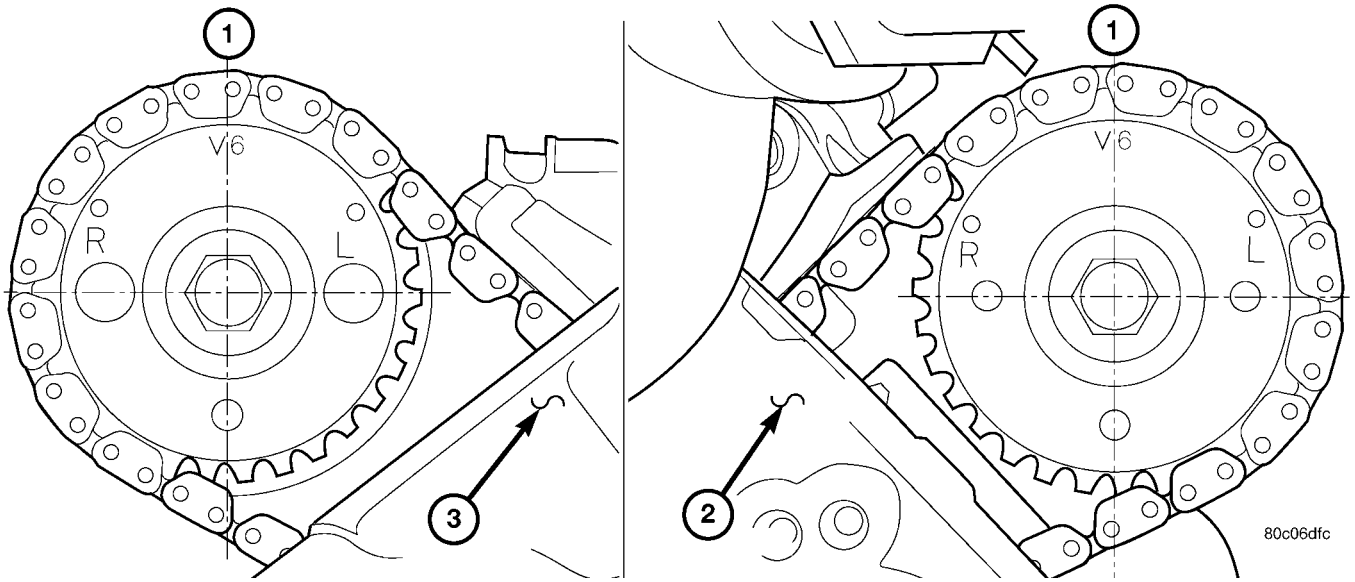

Fig. 33 camshaft sprocket v6 marks

CAMSHAFT (Continued)

CAUTION: Do not hold or pry on the camshaft target wheel for any reason, Severe damage will occur to the target wheel. A damaged target wheel could cause a vehicle no start condition.

(4) Loosen but **DO NOT** remove the camshaft sprocket retaining bolt (Fig. 35). Leave bolt snug against sprocket.

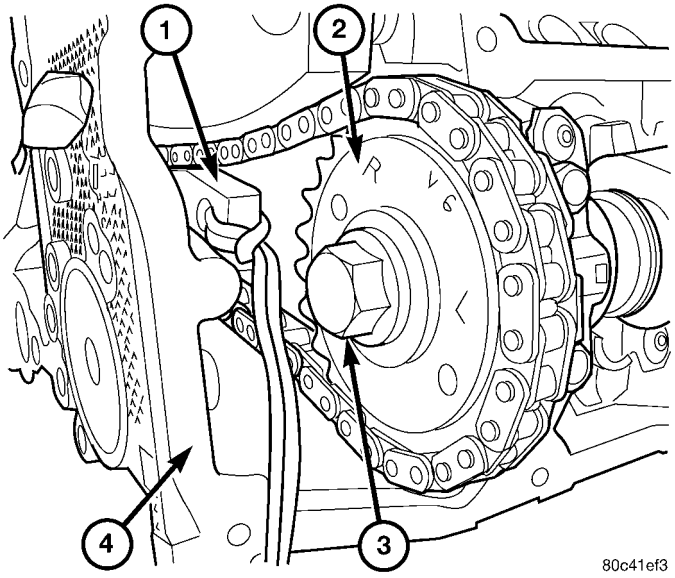

Fig. 35 SECURING TIMING CHAIN TENSIONERS USING TIMING CHAIN WEDGE - Typical

1 - SPECIAL TOOL 8379
2 - CAMSHAFT SPROCKET
3 - CAMSHAFT SPROCKET BOLT
4 - CYLINDER HEAD

NOTE: The timing chain tensioners must be secured prior to removing the camshaft sprockets. Failure to secure tensioners will allow the tensioners to extend, requiring timing chain cover removal in order to reset tensioners.

CAUTION: Do not force wedge past the narrowest point between the chain strands. Damage to the tensioners may occur.

(5) Position Special Tool 8379 timing chain wedge (Fig. 35)(1) between the timing chain strands. Tap the tool to securely wedge the timing chain against the tensioner arm and guide.

(6) Remove the camshaft position sensor.

(7) Hold the camshaft with Special Tool 8428 Camshaft Wrench (Fig. 36)(2), while removing the camshaft sprocket bolt and sprocket.

(8) Starting at the outside working inward, loosen the camshaft bearing cap retaining bolts (Fig. 37)1/2 turn at a time. Repeat until all load is off the bearing caps.

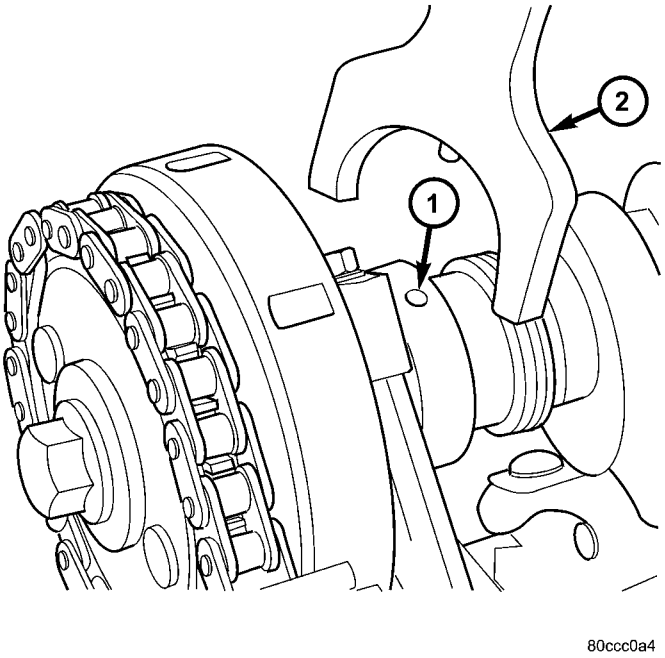

Fig. 36 Special Tool 8428

1 - Camshaft hole
2 - Special Tool 8428

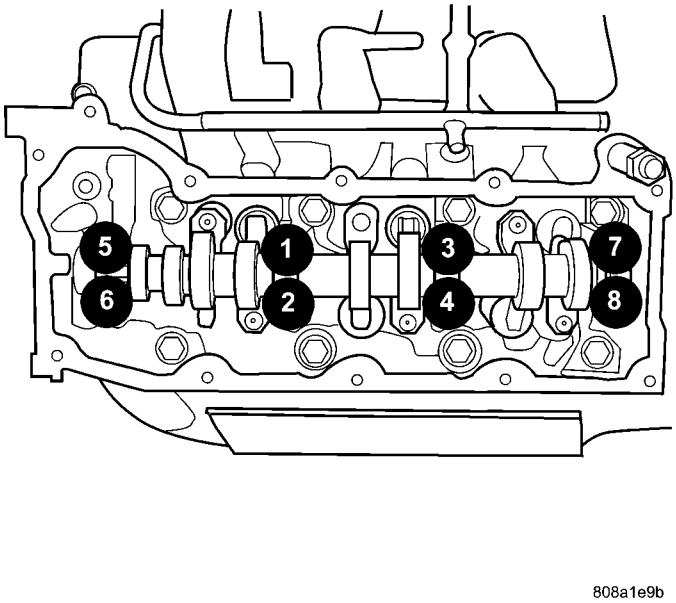

Fig. 37 CAMSHAFT BEARING CAPS TIGHTENING

CAUTION: DO NOT STAMP OR STRIKE THE CAMSHAFT BEARING CAPS. SEVERE DAMAGE WILL OCCUR TO THE BEARING CAPS.

CAMSHAFT (Continued)

NOTE: When the camshaft is removed the rocker arms may slide downward, mark the rocker arms before removing camshaft.

(9) Remove the camshaft bearing caps and the camshaft.

INSTALLATION

(1) Lubricate camshaft journals with clean engine oil.

NOTE: Position the right side camshaft so that the camshaft sprocket dowel is near the 10 o'clock position, This will place the camshaft at the neutral position easing the installation of the camshaft bearing caps.

(2) Position the camshaft into the cylinder head.
(3) Install the camshaft bearing caps, hand tighten the retaining bolts.

NOTE: Caps should be installed so that the stamped numbers on the caps are in numerical order, (1 thru 4) from the front to the rear of the engine. All caps should be installed so that the stamped arrows on the caps point toward the front of the engine.

(4) Working in 1/2 turn increments, tighten the bearing cap retaining bolts starting with the middle cap working outward (Fig. 38).

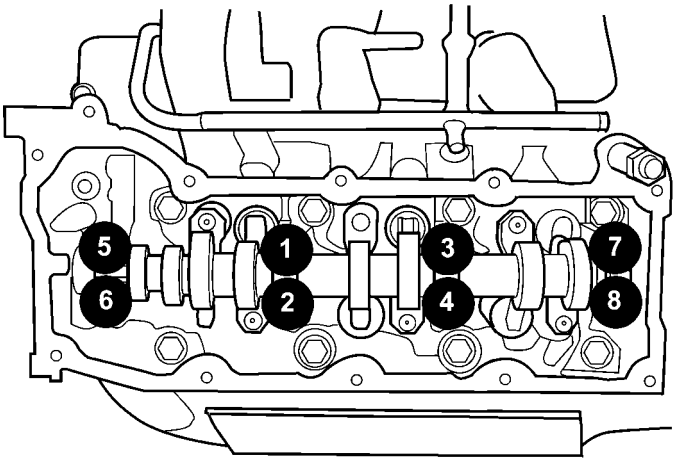

808a1e9b

Fig. 38 Camshaft Bearing Caps Tightening Sequence

(5) Torque the camshaft bearing cap retaining bolts to 11 N·m (100 in. lbs.).
(6) Position the camshaft drive gear into the timing chain aligning the V6 mark between the two marked chain links (Two links marked during removal).
(7) Using Special Tool 8428 Camshaft Wrench, rotate the camshaft until the camshaft sprocket dowel is aligned with the slot in the camshaft sprocket . Install the sprocket onto the camshaft.

CAUTION: Remove excess oil from camshaft sprocket bolt. Failure to do so can cause bolt over-torque resulting in bolt failure.

(8) Remove excess oil from camshaft sprocket bolt, then install the camshaft sprocket retaining bolt and hand tighten.
(9) Remove timing chain wedge special tool 8379.
(10) Using Special Tool 6958 spanner wrench with adapter pins 8346, torque the camshaft sprocket retaining bolt to 122 N·m (90 ft. lbs.).
(11) Install the camshaft position sensor.
(12) Install the cylinder head cover.

COVER - CYLINDER HEAD

REMOVAL

(1) Disconnect battery negative cable.
(2) Remove air cleaner assembly, resonator assembly and air inlet hose.
(3) Drain cooling system, below the level of the heater hoses (Refer to 7 - COOLING - STANDARD PROCEDURE).
(4) Remove accessory drive belt (Refer to 7 - COOLING/ACCESSORY DRIVE/DRIVE BELTS - REMOVAL).
(5) Remove air conditioning compressor retaining bolts and move compressor to the left.
(6) Remove heater hoses.
(7) Disconnect injector and ignition coil connectors.
(8) Disconnect and remove positive crankcase ventilation (PCV) hose.
(9) Remove oil fill tube.
(10) Un-clip injector and ignition coil harness and move away from cylinder head cover.
(11) Remove right rear breather tube and filter assembly.
(12) Remove cylinder head cover retaining bolts.
(13) Remove cylinder head cover.

INSTALLATION

CAUTION: Do not use harsh cleaners to clean the cylinder head covers. Severe damage to covers may occur.

COVER - CYLINDER HEAD (Continued)

NOTE: The gasket may be used again, provided no cuts, tears, or deformation has occurred.

(1) Clean cylinder head cover and both sealing surfaces. Inspect and replace gasket as necessary.
(2) Tighten cylinder head cover bolts and double ended studs to 12 N·m (105 in. lbs).
(3) Install right rear breather tube and filter assembly.
(4) Connect injector, ignition coil electrical connectors and harness retaining clips.
(5) Install the oil fill tube.
(6) Install PCV hose.
(7) Install heater hoses.
(8) Install air conditioning compressor retaining bolts.
(9) Install accessory drive belt (Refer to 7 - COOLING/ACCESSORY DRIVE/DRIVE BELTS - INSTALLATION).
(10) Fill Cooling system (Refer to 7 - COOLING - STANDARD PROCEDURE).
(11) Install air cleaner assembly, resonator assembly and air inlet hose.
(12) Connect battery negative cable.

INTAKE/EXHAUST VALVES & SEATS

STANDARD PROCEDURE - REFACING

NOTE: Valve seats that are worn or burned can be reworked, provided that correct angle and seat width are maintained. Otherwise the cylinder head must be replaced.

NOTE: When refacing valves and valve seats, it is important that the correct size valve guide pilot be used for reseating stones. A true and complete surface must be obtained.

(1) Using a suitable dial indicator measure the center of the valve seat Total run out must not exceed 0.051 mm (0.002 in).
(2) Apply a small amount of Prussian blue to the valve seat, insert the valve into the cylinder head, while applying light pressure on the valve rotate the valve. Remove the valve and examine the valve face. If the blue is transferred below the top edge of the valve face, lower the valve seat using a 15 degree stone. If the blue is transferred to the bottom edge of the valve face, raise the valve seat using a 65 degree stone.
(3) When the seat is properly positioned the width of the intake seat must be 1.75 – 2.36 mm (0.0689 – 0.0928 in.) and the exhaust seat must be 1.71 – 2.32 mm (0.0673 – 0.0911 in.).
(4) Check the valve spring installed height after refacing the valve and seat. The installed height for both intake and exhaust valve springs must not exceed 40.74 mm (1.6039 in.).
(5) The valve seat and valve face must maintain a face angle of 44.5 – 45 degrees angle (Fig. 39).

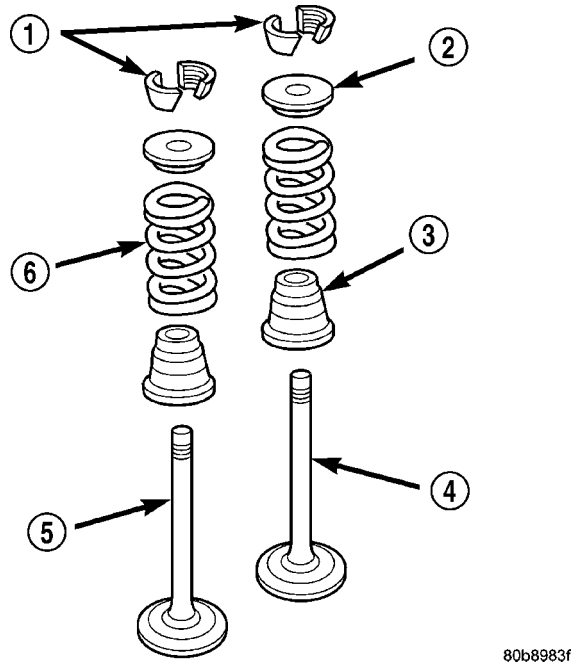

Fig. 39 Valve Assembly Configuration

1 - VALVE LOCKS (3–BEAD)
2 - RETAINER
3 - VALVE STEM OIL SEAL
4 - INTAKE VALVE
5 - EXHAUST VALVE
6 - VALVE SPRING

INTAKE/EXHAUST VALVES & SEATS (Continued)

REMOVAL

NOTE: The cylinder heads must be removed in order to perform this procedure.

(1) Remove rocker arms and lash adjusters. Refer to procedures in this section (Fig. 40).

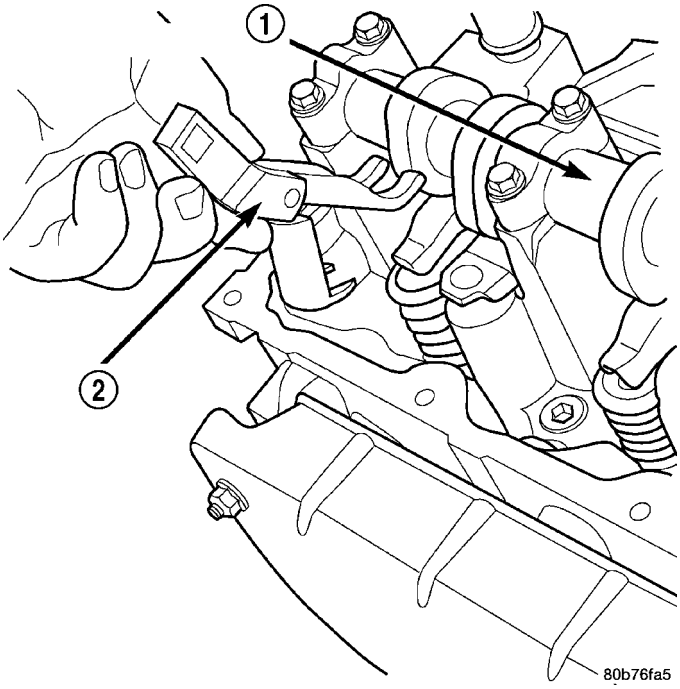

Fig. 40 Rocker Arm Removal

1 - CAMSHAFT
2 - SPECIAL TOOL 8516

(2) Remove the camshaft bearing caps and the camshaft.

NOTE: All six valve springs and valves are removed in the same manner; this procedure only covers one valve and valve spring.

(3) Using Special Tool C-3422–B or C-3422–C Valve Spring Compressor and Special tool 8519 Adapter, compress the valve spring.

NOTE: It may be necessary to tap the top of the valve spring to loosen the spring retainers locks enough to be removed.

(4) Remove the two spring retainer lock halves.

NOTE: the valve spring is under tension use care when releasing the valve spring compressor.

(5) Remove the valve spring compressor.
(6) Remove the spring retainer, and the spring.

NOTE: Check for sharp edges on the keeper grooves. Remove any burrs from the valve stem before removing the valve from the cylinder head.

(7) Remove the valve from the cylinder head.

NOTE: The valve stem seals are common between intake and exhaust.

(8) Remove the valve stem seal. Mark the valve for proper installation.

TESTING VALVE SPRINGS

NOTE: Whenever the valves are removed from the cylinder head it is recommended that the valve springs be inspected and tested for reuse.

Inspect the valve springs for physical signs of wear or damage. Turn table of tool C-647 until surface is in line with the 40.12 mm (1.579 in.) mark on the threaded stud and the zero mark on the front. Place spring over the stud on the table and lift compressing lever to set tone device. Pull on torque wrench until Ping is heard. Take reading on torque wrench at this instant. Multiply this reading by two. This will give the spring load at test length. Fractional measurements are indicated on the table for finer adjustments. Refer to Specifications Section to obtain specified height and allowable tensions. Replace any springs that do not meet specifications (Fig. 41).

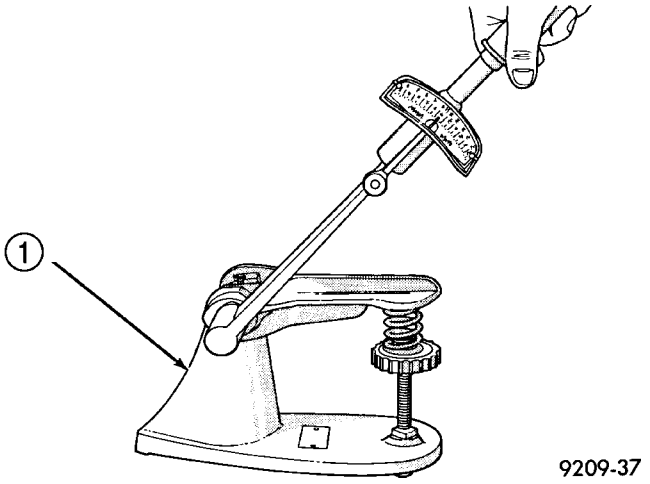

Fig. 41 Testing Valve Springs

1 - SPECIAL TOOL C-647

INSTALLATION

(1) coat the valve stem with clean engine oil and insert it into the cylinder head.
(2) Install the valve stem seal. make sure the seal is fully seated and that the garter spring at the top of the seal is intact.
(3) Install the spring and the spring retainer.

INTAKE/EXHAUST VALVES & SEATS (Continued)

(4) Using the valve spring compressor, compress the spring and install the two valve spring retainer halves (Fig. 42).

(5) Release the valve spring compressor and make sure the two spring retainer halves and the spring retainer are fully seated.

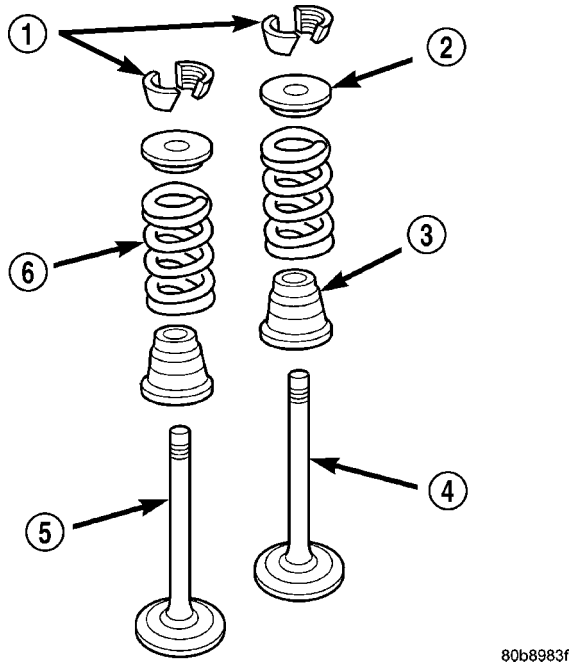

Fig. 42 Valve Assembly Configuration

1 - VALVE LOCKS (3–BEAD)
2 - RETAINER
3 - VALVE STEM OIL SEAL
4 - INTAKE VALVE
5 - EXHAUST VALVE
6 - VALVE SPRING

(6) lubricate the camshaft journal with clean engine oil then Position the camshaft (with the sprocket dowel on the left camshaft at 11 o'clock and the right camshaft at 12 o'clock), then position the camshaft bearing caps.

(7) Install the camshaft bearing cap retaining bolts. Tighten the bolts 9–13 N·m (100 in. lbs.) in ½ turn increments in the sequence shown (Fig. 43).

(8) Position the hydraulic lash adjusters and rocker arms.

ROCKER ARM

DESCRIPTION

The rocker arms are steel stampings with an integral roller bearing. The rocker arms incorporate a 0.5 mm oil hole in the lash adjuster socket for roller and camshaft lubrication.

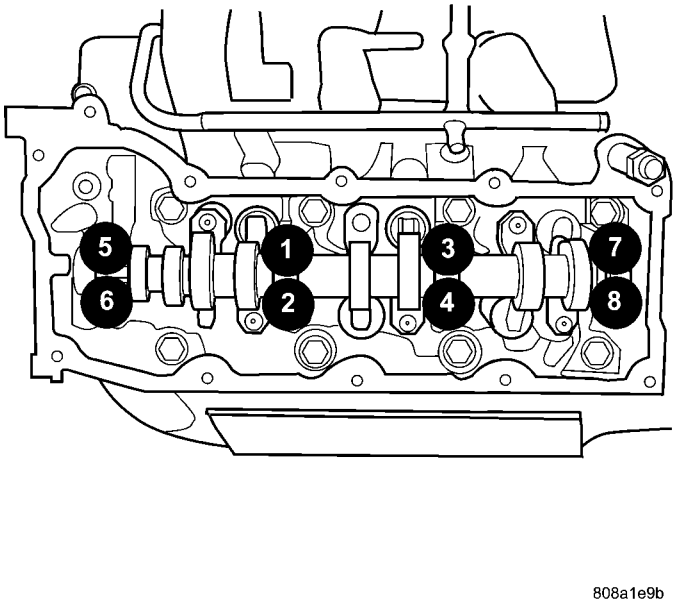

Fig. 43 Camshaft Bearing Caps Tightening Sequence

REMOVAL

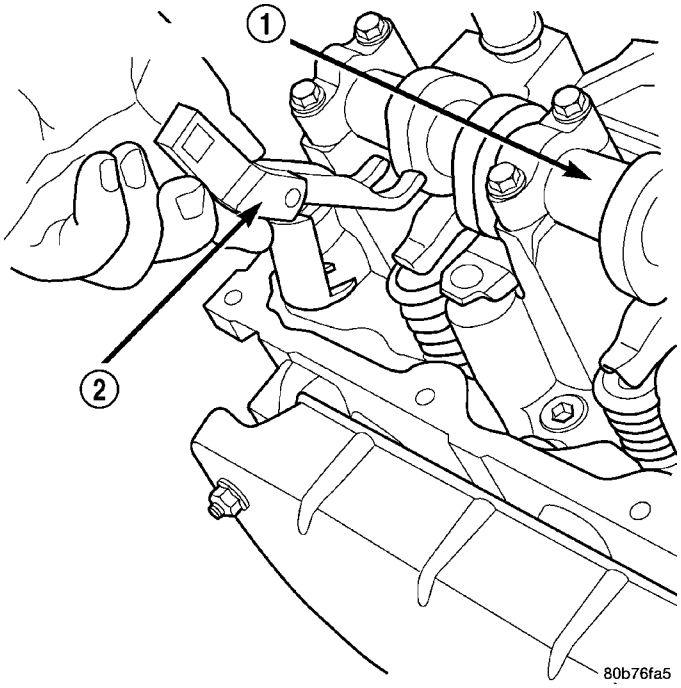

Fig. 44 Rocker Arm - Removal

1 - CAMSHAFT
2 - SPECIAL TOOL 8516

NOTE: Disconnect the battery negative cable to prevent accidental starter engagement.

ROCKER ARM (Continued)

(1) Remove the cylinder head cover (Refer to 9 - ENGINE/CYLINDER HEAD/CYLINDER HEAD COVER(S) - REMOVAL).

(2) For rocker arm removal on cylinder No. 4, Rotate the crankshaft until cylinder No. 1 is at BDC intake stroke.

(3) For rocker arm removal on cylinder No. 1, Rotate the crankshaft until cylinder No. 1 is at BDC combustion stroke.

(4) For rocker arm removal on cylinders No. 3 and No. 5, Rotate the crankshaft until cylinder No. 1 is at TDC exhaust stroke.

(5) For rocker arm removal on cylinders No. 2 and No. 6, Rotate the crankshaft until cylinder No. 1 is at TDC ignition stroke.

(6) Using special tool 8516 Rocker Arm Remover (Fig. 44)(2) , press downward on the valve spring, remove rocker arm.

INSTALLATION

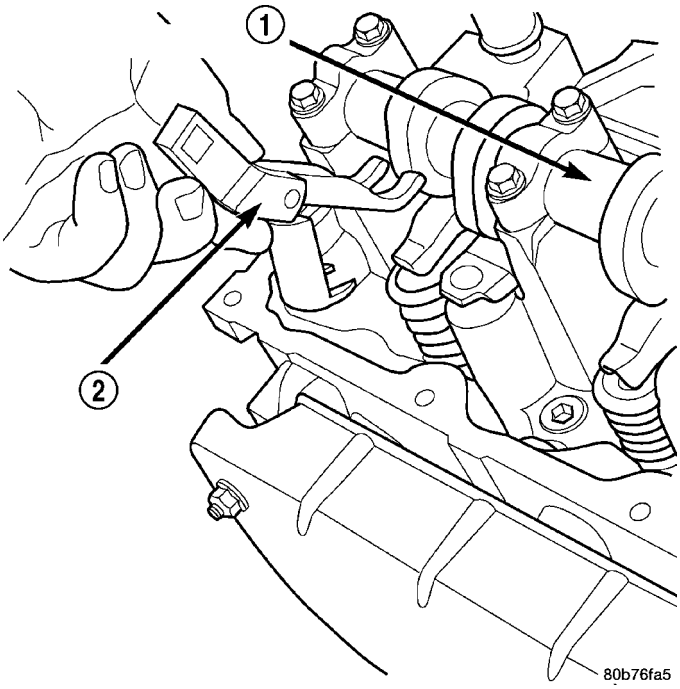

Fig. 45 Rocker Arm - Installation

1 - CAMSHAFT
2 - SPECIAL TOOL 8516

CAUTION: Make sure the rocker arms are installed with the concave pocket over the lash adjusters. Failure to do so may cause severe damage to the rocker arms and/or lash adjusters.

NOTE: Coat the rocker arms with clean engine oil prior to installation.

(1) For rocker arm installation on cylinders No. 4, Rotate the crankshaft until cylinder No. 1 is at BDC intake stroke.

(2) For rocker arm installation on cylinder No. 1, Rotate the crankshaft until cylinder No. 1 is at BDC combustion stroke.

(3) For rocker arm installation on cylinders No. 3 and No. 5, Rotate the crankshaft until cylinder No. 1 is at TDC exhaust stroke.

(4) For rocker arm installation on cylinders No. 2 and No. 6, Rotate the crankshaft until cylinder No. 1 is at TDC ignition stroke.

(5) Using special tool 8516 (2) press downward on the valve spring, install rocker arm (Fig. 45).

(6) Install the cylinder head cover (Refer to 9 - ENGINE/CYLINDER HEAD/CYLINDER HEAD COVER(S) - INSTALLATION).

SEALS - VALVE GUIDE

DESCRIPTION

The valve guide seals are made of rubber and incorporate an integral steel valve spring seat. The integral garter spring maintains consistent lubrication control to the valve stems.

SPRINGS - VALVE

DESCRIPTION

The valve springs are made from high strength chrome silicon steel. There are different springs for intake and exhaust applications. The exhaust spring has an external damper. The valve spring seat is integral with the valve stem seal, which is a positive type seal to control lubrication.

REMOVAL

(1) Remove the cylinder head cover (Refer to 9 - ENGINE/CYLINDER HEAD/CYLINDER HEAD COVER(S) - REMOVAL).

(2) Using Special Tool 8516 Valve Spring Compressor, remove the rocker arms and the hydraulic lash adjusters.

(3) Remove the spark plug for the cylinder the valve spring and seal are to be removed from.

(4) Apply shop air to the cylinder to hold the valves in place when the spring is removed.

NOTE: All six valve springs and seals are removed in the same manner; this procedure only covers one valve seal and valve spring.

(5) Using Special Tool 8387 Valve Spring Compressor, compress the valve spring.

SPRINGS - VALVE (Continued)

NOTE: It may be necessary to tap the top of the valve spring to loosen the spring retainers locks enough to be removed.

(6) Remove the two spring retainer lock halves.

NOTE: the valve spring is under tension use care when releasing the valve spring compressor.

(7) Remove the valve spring compressor.

NOTE: The valve springs are NOT common between intake and exhaust.

(8) Remove the spring retainer, and the spring.
(9) Remove the valve stem seal.

NOTE: The valve stem seals are common between intake and exhaust.

INSTALLATION

NOTE: All six valve springs and seals are removed in the same manner; this procedure only covers one valve seal and valve spring.

(1) Apply shop air to the cylinder to hold the valves in place while the spring is installed.

NOTE: The valve stem seals are common between intake and exhaust.

(2) Install the valve stem seal.

NOTE: The valve springs are NOT common between intake and exhaust.

(3) Install the spring retainer, and the spring.
(4) Using Special Tool 8387 Valve Spring Compressor, compress the valve spring.
(5) Install the two spring retainer lock halves.

NOTE: the valve spring is under tension use care when releasing the valve spring compressor.

(6) Remove the valve spring compressor.
(7) Disconnect the shop air to the cylinder.
(8) Install the spark plug for the cylinder the valve spring and seal was installed on.
(9) Using Special Tool 8516 Valve Spring Compressor, install the rocker arms and the hydraulic lash adjusters.
(10) Install the cylinder head cover (Refer to 9 - ENGINE/CYLINDER HEAD/CYLINDER HEAD COVER(S) - INSTALLATION).

ENGINE BLOCK

DESCRIPTION

The cylinder block is made of cast iron. The block is a closed deck design with the left bank forward. To provide high rigidity and improved NVH an enhanced compacted graphite bedplate (Fig. 46) is bolted to the block. The block design allows coolant flow between the cylinders bores, and an internal coolant bypass to a single poppet inlet thermostat is included in the cast aluminum front cover.

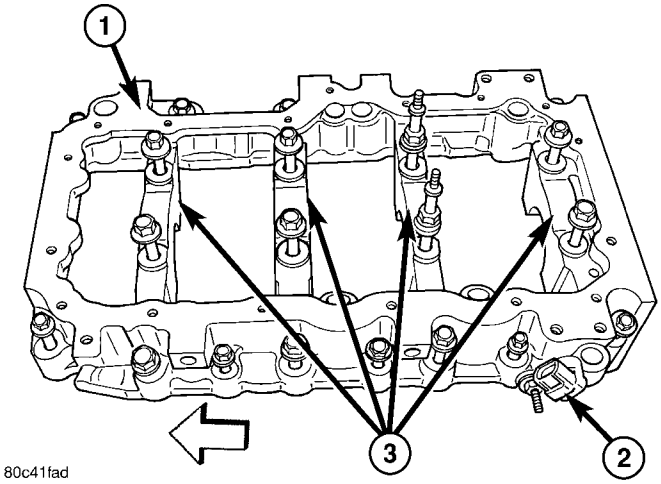

Fig. 46 Cylinder Block Bedplate

1 - CYLINDER BLOCK BEDPLATE
2 - CRANKSHAFT POSITION SENSOR
3 - CRANKSHAFT MAIN BEARING CAPS

STANDARD PROCEDURE - CYLINDER BORE HONING

Before honing, stuff plenty of clean shop towels under the bores and over the crankshaft to keep abrasive materials from entering the crankshaft area.

(1) Used carefully, the Cylinder Bore Sizing Hone C-823, equipped with 220 grit stones, is the best tool for this job. In addition to deglazing, it will reduce taper and out-of-round, as well as removing light scuffing, scoring and scratches. Usually, a few strokes will clean up a bore and maintain the required limits.

CAUTION: DO NOT use rigid type hones to remove cylinder wall glaze.

(2) Deglazing of the cylinder walls may be done if the cylinder bore is straight and round. Use a cylinder surfacing hone, Honing Tool C-3501, equipped with 280 grit stones (C-3501-3810). about 20-60 strokes, depending on the bore condition, will be sufficient to provide a satisfactory surface. Using honing

ENGINE BLOCK (Continued)

oil C-3501-3880, or a light honing oil, available from major oil distributors.

CAUTION: DO NOT use engine or transmission oil, mineral spirits, or kerosene.

(3) Honing should be done by moving the hone up and down fast enough to get a crosshatch pattern. The hone marks should INTERSECT at 50° to 60° for proper seating of rings (Fig. 47).

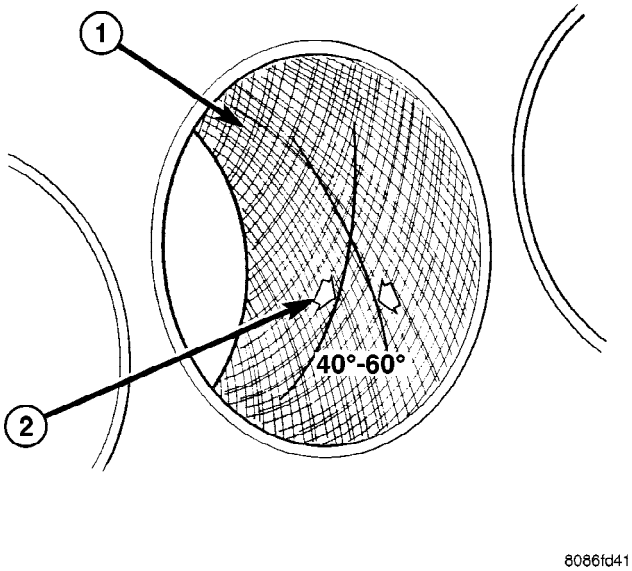

Fig. 47 Cylinder Bore Crosshatch Pattern

1 - CROSSHATCH PATTERN
2 - INTERSECT ANGLE

(4) A controlled hone motor speed between 200 and 300 RPM is necessary to obtain the proper crosshatch angle. The number of up and down strokes per minute can be regulated to get the desired 50° to 60° angle. Faster up and down strokes increase the crosshatch angle.

(5) After honing, it is necessary that the block be cleaned to remove all traces of abrasive. Use a brush to wash parts with a solution of hot water and detergent. Dry parts thoroughly. Use a clean, white, lint-free cloth to check that the bore is clean. Oil the bores after cleaning to prevent rusting.

CLEANING

Thoroughly clean the oil pan and engine block gasket surfaces.

Use compressed air to clean out:

- The galley at the oil filter adaptor hole.
- The front and rear oil galley holes.
- The feed holes for the crankshaft main bearings.

Once the block has been completely cleaned, apply Loctite PST pipe sealant with Teflon 592 to the threads of the front and rear oil galley plugs. Tighten the plugs to 34 N·m (25 ft. lbs.) torque.

INSPECTION

(1) It is mandatory to use a dial bore gauge to measure each cylinder bore diameter. To correctly select the proper size piston, a cylinder bore gauge, capable of reading in 0.003 mm (.0001 in.) INCREMENTS is required. If a bore gauge is not available, do not use an inside micrometer (Fig. 48).

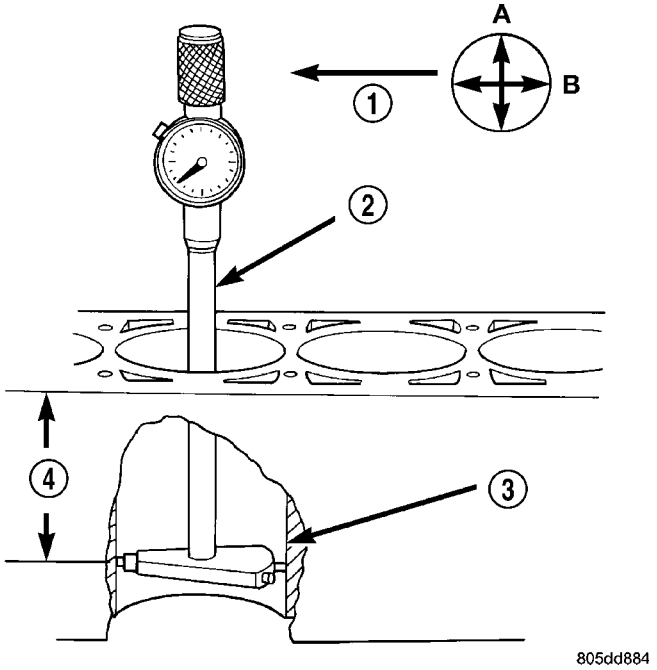

Fig. 48 Bore Gauge—Typical

1 - FRONT
2 - BORE GAUGE
3 - CYLINDER BORE
4 - 38 MM
(1.5 in)

(2) Measure the inside diameter of the cylinder bore at three levels below top of bore. Start perpendicular (across or at 90 degrees) to the axis of the crankshaft and then take two additional reading.

(3) Measure the cylinder bore diameter crosswise to the cylinder block near the top of the bore. Repeat the measurement near the middle of the bore, then repeat the measurement near the bottom of the bore.

(4) Determine taper by subtracting the smaller diameter from the larger diameter.

(5) Rotate measuring device 90° and repeat steps above.

(6) Determine out-of-roundness by comparing the difference between each measurement.

(7) If cylinder bore taper does not exceed 0.025 mm (0.001 inch) and out-of-roundness does not

ENGINE BLOCK (Continued)

exceed 0.025 mm (0.001 inch), the cylinder bore can be honed. If the cylinder bore taper or out- of-round condition exceeds these maximum limits, the cylinder block must be replaced. A slight amount of taper always exists in the cylinder bore after the engine has been in use for a period of time.

CRANKSHAFT

DESCRIPTION

The crankshaft (Fig. 49) is constructed of nodular cast iron. The crankshaft is a three throw split pin design with six counterweights for balancing purposes. The crankshaft is supported by four select fit main bearings with the number two serving as the thrust washer location. The main journals of the crankshaft are cross drilled to improve rod bearing lubrication. The number six counterweight has provisions for crankshaft position sensor target wheel mounting. The select fit main bearing markings are located on the rear side of the target wheel. The crankshaft oil seals are one piece design. The front oil seal is retained in the timing chain cover, and the rear seal is pressed in to a bore formed by the cylinder block and the bedplate assembly.

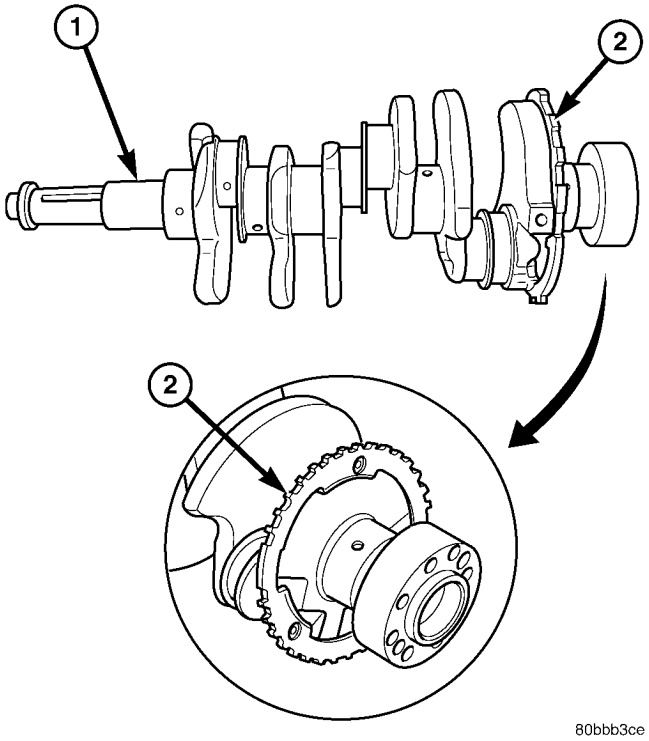

Fig. 49 Crankshaft and Target Ring

1 - CRANKSHAFT
2 - CRANKSHAFT POSITION SENSOR TARGET RING

REMOVAL

NOTE: To remove the crankshaft from the engine, the engine must be removed from the vehicle.

(1) Remove the engine (Refer to 9 - ENGINE - REMOVAL).
(2) Remove the engine oil pump (Refer to 9 - ENGINE/LUBRICATION/OIL PUMP - REMOVAL).

CAUTION: DO NOT pry on the oil pan gasket when removing the oil pan, The oil pan gasket is mounted to the cylinder block in three locations and will remain attached to block when removing oil pan. Gasket can not be removed with oil pan.

(3) Remove the bedplate mounting bolts. Note the location of the two stud bolts for installation.
(4) Remove the connecting rods from the crankshaft.

CAUTION: The bedplate to cylinder block mating surface is a critical sealing surface. Do not pry on or damage this surface in anyway.

NOTE: The bedplate contains the lower main bearing halves. Use care when handling bedplate as not to drop or damage bearing halves. Installing main bearing halves in the wrong position will cause severe damage to the crankshaft.

NOTE: The bedplate has pry points cast into it. Use these points only. The pry points are shown below.

(5) Carefully pry on the pry points to loosen the bedplate then remove the bedplate (Fig. 50).

CAUTION: When removing the crankshaft, use care not to damage bearing surfaces on the crankshaft.

(6) Remove the crankshaft.
(7) Remove the crankshaft tone wheel.

INSPECTION

NOTE: Thoroughly inspect the connecting rod bearing bores and main bearing bores for scoring, blueing or severe scratches. Further disassembly may be required.

If connecting rod bearing bores show damage, the cylinder heads must be removed to service the piston and rod assemblies. If the bedplate or the cylinder block main bearing bores show damage the engine must be replaced.

CRANKSHAFT (Continued)

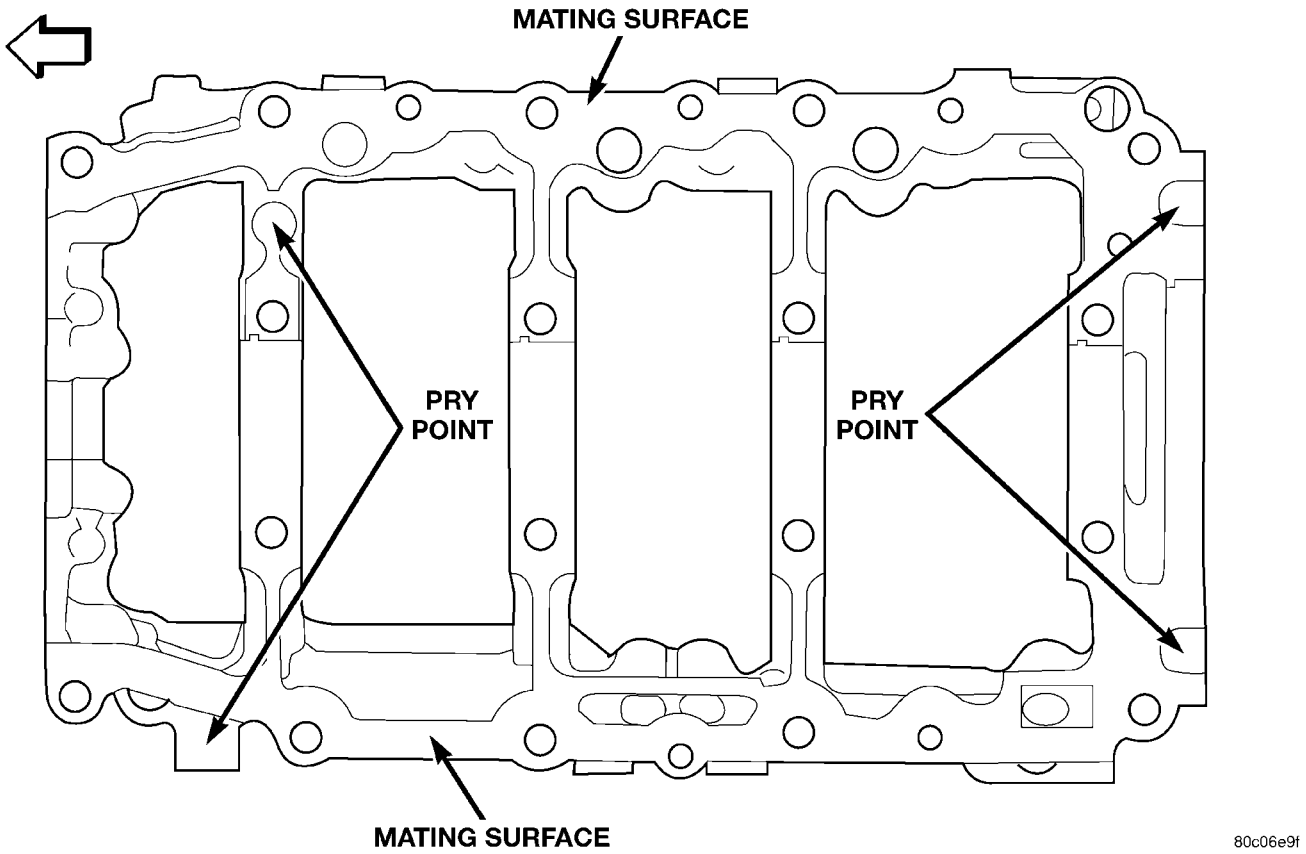

Fig. 50 BEDPLATE PRY POINT LOCATION

(1) If required, remove the main bearing halves from the cylinder block and bedplate.

(2) Thoroughly clean the bedplate to cylinder block sealing surfaces and main bearing bores. Remove all oil and sealant residue.

(3) Inspect the bedplate main bearing bores for cracks, scoring or severe blueing. If either condition exists the engine must be replaced.

(4) Inspect the crankshaft thrust washers for scoring, scratches, wear or blueing. If either condition exist replace the thrust washers.

(5) Inspect the oil pan gasket/windage tray for splits, tears or cracks in the gasket sealing surfaces. Replace gasket as necessary.

INSTALLATION

CAUTION: Main bearings are select fit. Refer to Crankshaft Main Bearings in this section for proper bearing selections.

CAUTION: When installing crankshaft, use care not to damage bearing surfaces on the crankshaft.

NOTE: Apply sealant to the tone wheel retaining screws prior to installation.

(1) Lubricate upper main bearing halves with clean engine oil.

(2) Install the crankshaft tone wheel. Torque the mounting screws to 15 N·m (11 ft. lbs.).

(3) Position crankshaft in cylinder block.

(4) Install the thrust washers (Fig. 51).

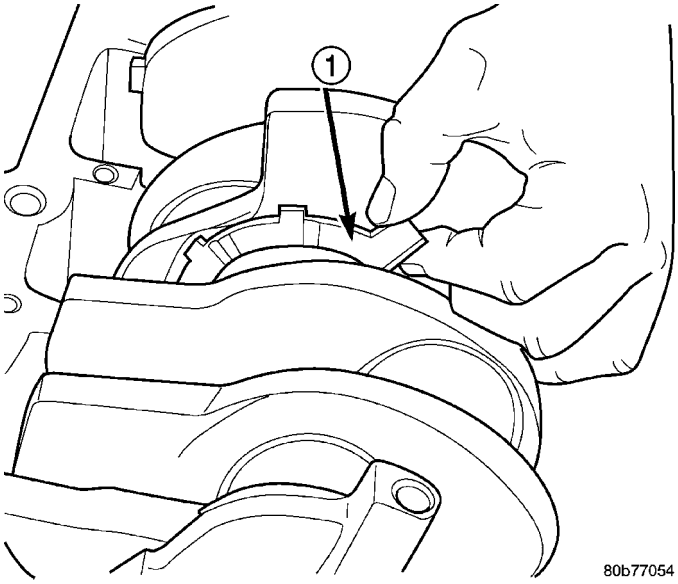

Fig. 51 Crankshaft Thrust Washer Installation

1 - CRANKSHAFT THRUST WASHER

CRANKSHAFT (Continued)

CAUTION: The bedplate to cylinder block mating surface must be coated with Mopar® Engine RTV sealant prior to installation. Failure to do so will cause severe oil leaks.

NOTE: Make sure that the bedplate and cylinder block sealing surfaces are clean and free of oil or other contaminants. Contaminants on the sealing surfaces may cause main bearing distortion and/or oil leaks.

(5) Apply a 2.5mm (0.100 inch) bead of Mopar® Engine RTV sealant to the cylinder block-to-bedplate mating surface as shown (Fig. 52).

(6) Coat the crankshaft main bearing journals with clean engine oil and position the bedplate onto the cylinder block.

NOTE: Lubricate the bedplate retaining bolts with clean engine oil prior to installation.

(7) Install the bedplate retaining bolts, making sure to place the stud bolts in the correct location, Torque the bolts in the sequence shown (Fig. 53).

- Hand tighten bolts **1D, 1G and 1F** until the bedplate contacts the block.
- Tighten bolts **1A–1J** to 54 N·m (40 ft. lbs.)
- Tighten bolts **1–8** to 7 N·m (5 ft. lbs.)

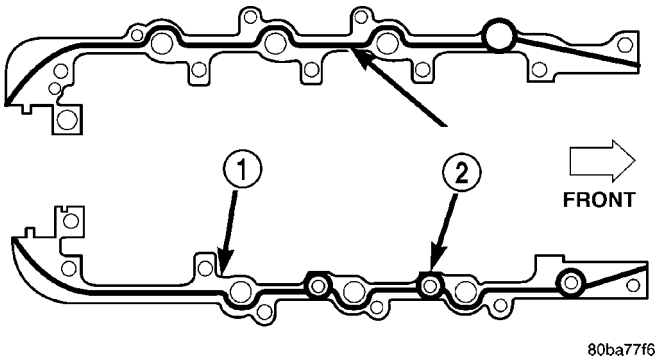

Fig. 52 Cylinder Block-to-Bedplate Sealant Bead Location

1 - CYLINDER BLOCK
2 - SEALANT BEAD LOCATION

- Turn bolts **1–8** an additional 90°.
- Tighten bolts **A–E** 27 N·m (20 ft. lbs.).

(8) Measure crankshaft end play. Refer to Crankshaft Main Bearings in this section for procedure.

(9) Install the connecting rods and measure side clearance. Refer to Connecting Rod Bearings in this section for procedure.

(10) Position the oil pan gasket/windage tray, using a new o-ring, install the oil pickup tube. Torque the bolt to 28N·n (20 ft. lbs.) torque the nuts to 28N·m (20 ft. lbs.).

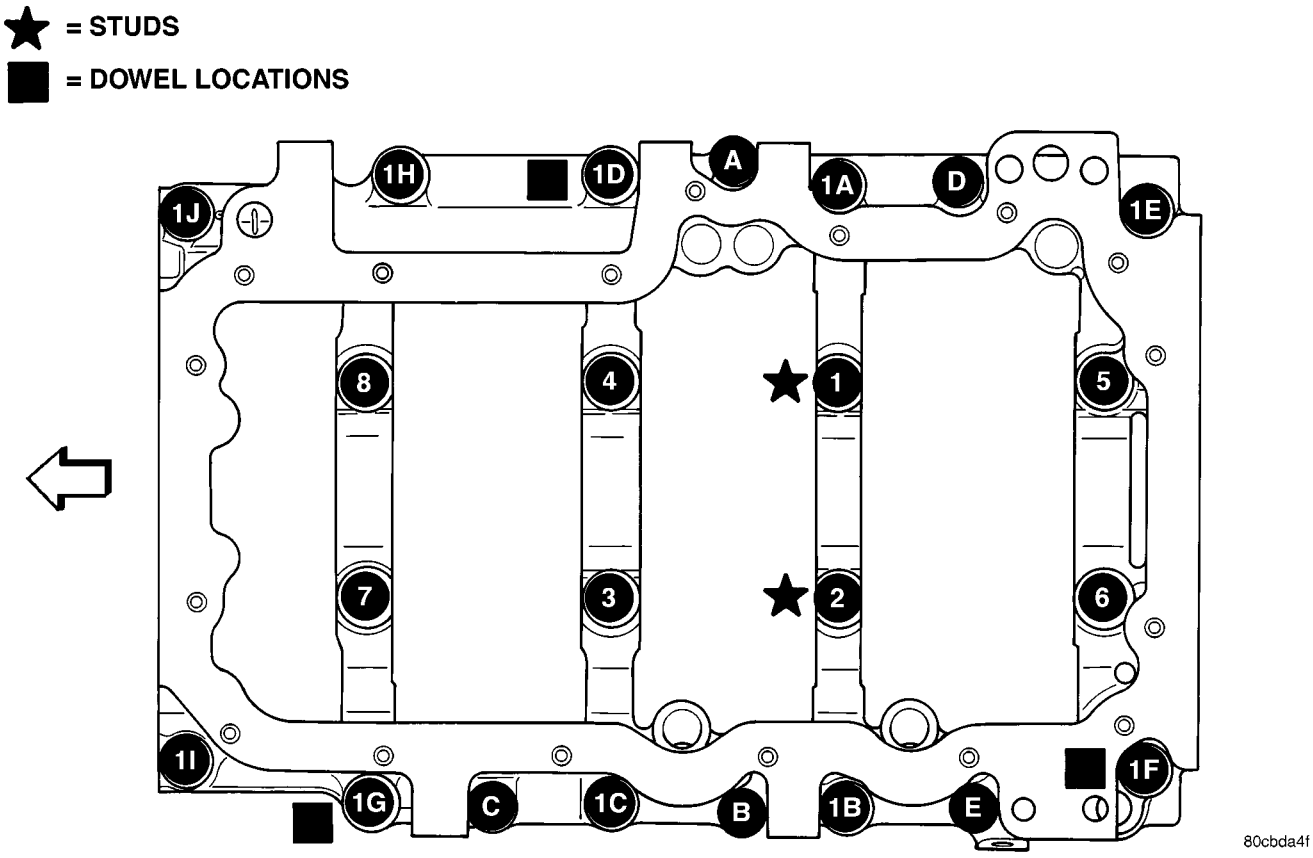

Fig. 53 BEDPLATE TIGHTENING SEQUENCE

CRANKSHAFT (Continued)

(11) Install the oil pan. Torque the retaining bolts to 15 N·m (11 ft. lbs.) in the sequence shown.

(12) Install the engine.

CRANKSHAFT MAIN BEARINGS

STANDARD PROCEDURE

MAIN BEARING - FITTING

SELECT FIT IDENTIFICATION

The main bearings are “select fit” to achieve proper oil clearances. For main bearing selection, the crankshaft position sensor target wheel has grade identification marks stamped into it (Fig. 54). These marks are read from left to right, corresponding with journal number 1, 2, 3, 4. The crankshaft position sensor target wheel is mounted to the number 6 counter weight on the crankshaft.

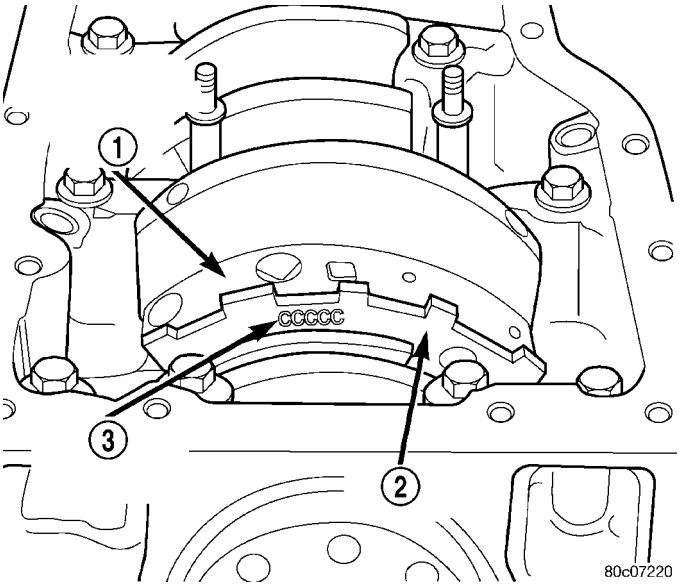

Fig. 54 Main Bearing Markings on Target Wheel -Typical

1 - REARMOST CRANKSHAFT COUNTER WEIGHT
2 - TARGET WHEEL
3 - MAIN BEARING SELECT FIT MARKINGS

INSPECTION

Wipe the inserts clean and inspect for abnormal wear patterns and for metal or other foreign material imbedded in the lining. Normal main bearing insert wear patterns are illustrated.

Inspect the back of the inserts for fractures, scrapings or irregular wear patterns.

Inspect the upper insert locking tabs for damage.

Replace all damaged or worn bearing inserts.

MAIN BEARING JOURNAL DIAMETER (CRANKSHAFT REMOVED)

Remove the crankshaft from the cylinder block. Refer to CRANKSHAFT.

Clean the oil off the main bearing journal.

Determine the maximum diameter of the journal with a micrometer. Measure at two locations 90° apart at each end of the journal.

The maximum allowable taper is 0.008mm (0.0004 inch.) and maximum out of round is 0.005mm (0.002 inch). Compare the measured diameter with the journal diameter specification (Main Bearing Fitting Chart). Select inserts required to obtain the specified bearing-to-journal clearance.

Install the crankshaft into the cylinder block. Refer to CRANKSHAFT.

Check crankshaft end play. Refer to CHECKING CRANKSHAFT END PLAY.

CRANKSHAFT MAIN BEARING SELECTION

(1) Service main bearings are available in four grades. The chart below identifies the four service grades available.

Crankshaft Marking	JOURNAL SIZE SIZE mm (in.)	
″R″ Size	63.488 - 63.496 mm (2.4995 - 2.4998 in.)	
″S″ Size	63.496 - 63.500 mm (2.4998 - 2.4999 in.)	
″T″ Size	63.500 - 63.504 mm (2.4999 - 2.501 in.)	
″U″ Size	63.504 - 63.512 mm (2.5001 - 2.5004 in.)	
Bearing size		
Bearing Code	Size	Application
Upper Bearing		
A	.2.443 - 2.447 mm (.0961 - .0963 in.)	Use with crankshaft size ″R″
B	2.439 - 2.443 mm (0.960 - .0961 in.)	Use with crankshaft ″S, T″
C	2.435 - 2.439 mm (.0958 - .0960 in.)	Use with crankshaft ″U″
Lower Bearing Main ″1″ and ″4″		

CRANKSHAFT MAIN BEARINGS (Continued)

Crankshaft Marking	JOURNAL SIZE SIZE mm (in.)	
″1″	2.441 - 2.447 mm (.0961 -.0963 in.)	Use with crankshaft ″R, S″
″2″	2.435 - 2.441 mm (.0958 - .0962 in.)	Use with crankshaft ″T, U″
Lower Main Bearing ″2″ and ″3″		
″3″	2.429 - 2.435 mm (.0956 - .0958 in.)	Use with crankshaft ″R, S″
″4″	2.423 - 2.429 mm (.0953 - .0956 in.)	Use with crankshaft ″T, U″
Bearing Clearances		
Main ″1, 4″		
Crankshaft ″R″	.004 - .034 mm (.00015 - .0013 in.)	
Crankshaft ″S″	.004 - .030 mm (.00015 - .0011 in.)	
Crankshaft ″T″	.006 - .032 mm (.0002 - .0012 in.)	
Crankshaft ″U″	.002 - .032 mm (.00007 -. 0012 in.)	
Main ″2, 3″		
Crankshaft ″R″	.016 - .046 mm (.0006 - .0018 in.)	
Crankshaft ″S″	.016 - .042 mm (.00062 - .016 in.)	
Crankshaft ″T″	.018 - .044 mm (.0007 - .0017 in.)	
Crankshaft ″U″	.014 - .044 mm (.0005 - .0017 in.)	

CRANKSHAFT OIL SEAL - FRONT

REMOVAL

(1) Disconnect negative cable from battery.

(2) Remove accessory drive belt (Refer to 7 - COOLING/ACCESSORY DRIVE/DRIVE BELTS - REMOVAL).

(3) Remove A/C compressor mouning fasteners and set aside.

(4) Drain cooling system (Refer to 7 - COOLING - STANDARD PROCEDURE).

(5) Remove upper radiator hose.

(6) Disconnect electrical connector for fan mounted inside radiator shroud.

(7) Remove radiator shroud attaching fasteners.

(8) Remove radiator cooling fan and shroud (Refer to 7 - COOLING/ENGINE/RADIATOR FAN - REMOVAL).

(9) Remove crankshaft damper bolt.

(10) Remove damper using Special Tools 8513 Insert and 1026 Three Jaw Puller (Fig. 55).

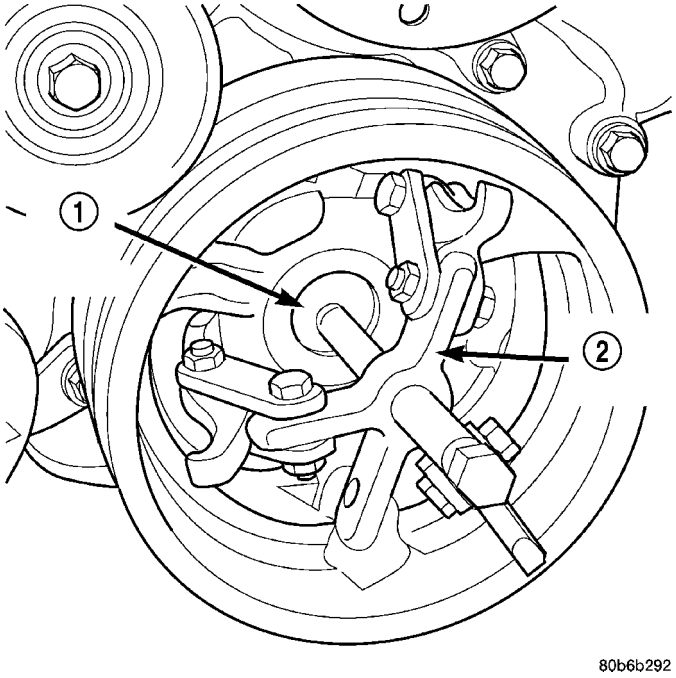

Fig. 55 Crankshaft Damper — Removal

1 - SPECIAL TOOL 8513 INSERT
2 - SPECIAL TOOL 1026

CRANKSHAFT OIL SEAL - FRONT (Continued)

(11) Using Special Tool 8511, remove crankshaft front seal (Fig. 56).

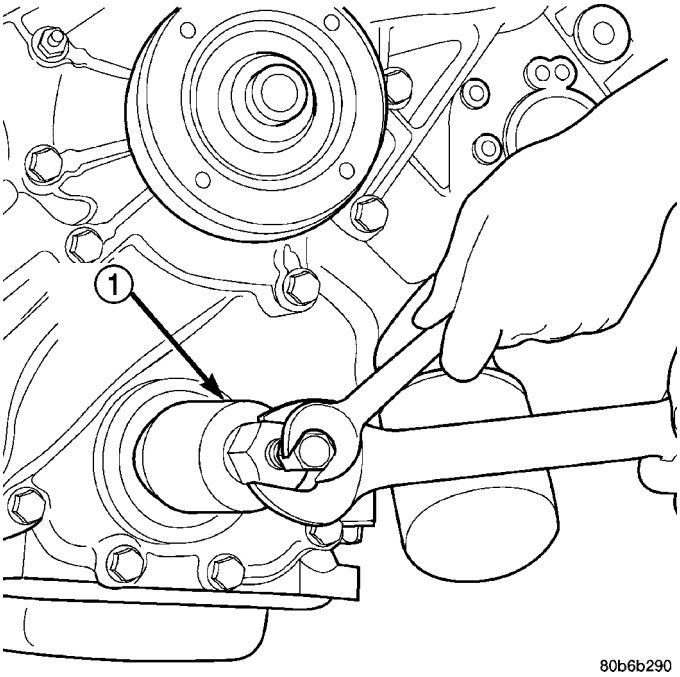

Fig. 56 Crankshaft Front Seal Removal

1 - SPECIAL TOOL 8511

INSTALLATION

CAUTION: To prevent severe damage to the Crankshaft, Damper or Special Tool 8512, thoroughly clean the damper bore and the crankshaft nose before installing Damper.

(1) Using Special Tool 8348 and 8512, install crankshaft front seal (Fig. 57).

(2) Install vibration damper (Refer to 9 - ENGINE/ENGINE BLOCK/VIBRATION DAMPER - INSTALLATION).

(3) Install radiator cooling fan and shroud (Refer to 7 - COOLING/ENGINE/RADIATOR FAN - INSTALLATION).

(4) Install upper radiator hose.

(5) Install A/C compressor and tighten fasteners to 54 N·m (40 ft. lbs.).

(6) Install accessory drive belt refer (Refer to 7 - COOLING/ACCESSORY DRIVE/DRIVE BELTS - INSTALLATION).

(7) Refill cooling system (Refer to 7 - COOLING - STANDARD PROCEDURE).

(8) Connect negative cable to battery.

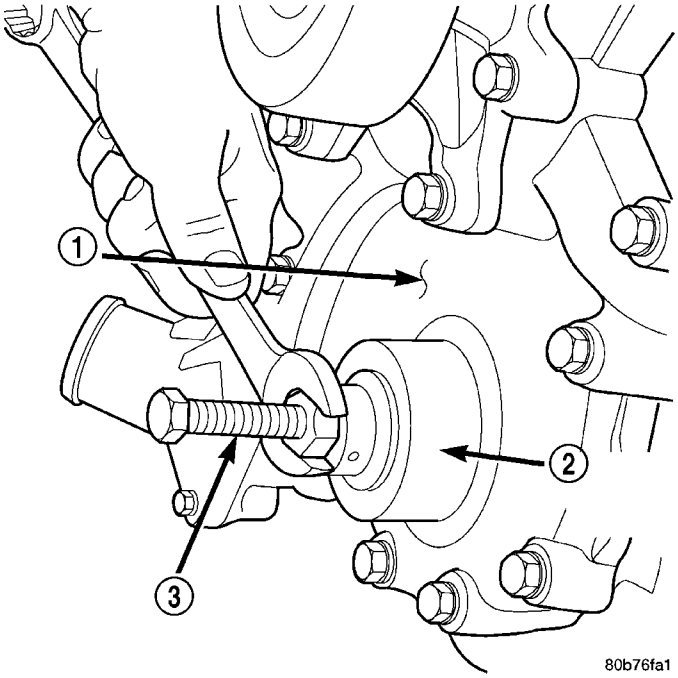

Fig. 57 Crankshaft Front Seal Installation

1 - TIMING CHAIN COVER
2 - SPECIAL TOOL 8348
3 - SPECIAL TOOL 8512

CRANKSHAFT OIL SEAL - REAR

DIAGNOSIS AND TESTING - REAR SEAL AREA LEAKS

Since it is sometimes difficult to determine the source of an oil leak in the rear seal area of the engine, a more involved inspection is necessary. The following steps should be followed to help pinpoint the source of the leak.

If the leakage occurs at the crankshaft rear oil seal area:

(1) Disconnect the battery.

(2) Raise the vehicle.

(3) Remove torque converter or clutch housing cover and inspect rear of block for evidence of oil. Use a black light to check for the oil leak:

(a) Circular spray pattern generally indicates seal leakage or crankshaft damage.

(b) Where leakage tends to run straight down, possible causes are a porous block, camshaft bore cup plugs, oil galley pipe plugs, oil filter runoff, and main bearing cap to cylinder block mating surfaces. See Engine, for proper repair procedures of these items.

(4) If no leaks are detected, pressurized the crankcase as outlined in the section, Inspection (Engine oil Leaks in general)

CRANKSHAFT OIL SEAL - REAR (Continued)

CAUTION: Do not exceed 20.6 kPa (3 psi).

(5) If the leak is not detected, very slowly turn the crankshaft and watch for leakage. If a leak is detected between the crankshaft and seal while slowly turning the crankshaft, it is possible the crankshaft seal surface is damaged. The seal area on the crankshaft could have minor nicks or scratches that can be polished out with emery cloth.

CAUTION: Use extreme caution when crankshaft polishing is necessary to remove minor nicks or scratches. The crankshaft seal flange is specially machined to complement the function of the rear oil seal.

(6) For bubbles that remain steady with shaft rotation, no further inspection can be done until disassembled. (Refer to 9 - ENGINE - DIAGNOSIS AND TESTING), under the Oil Leak row, for components inspections on possible causes and corrections.

(7) After the oil leak root cause and appropriate corrective action have been identified, (Refer to 9 - ENGINE/ENGINE BLOCK/CRANKSHAFT OIL SEAL - REAR - REMOVAL).

REMOVAL

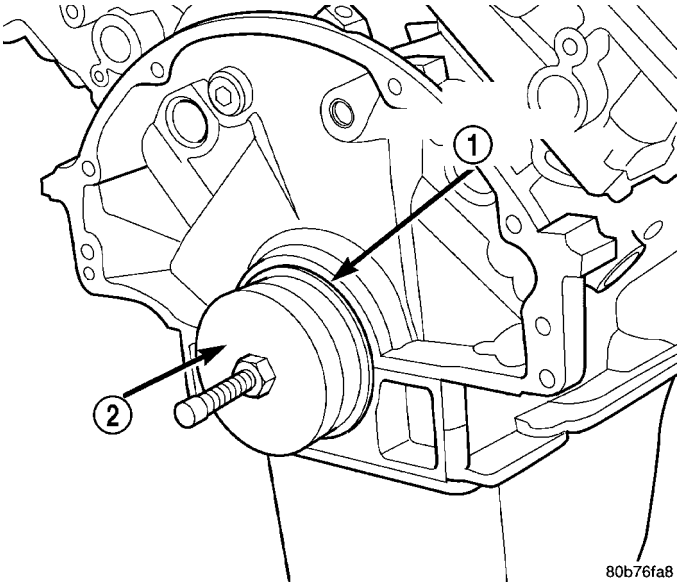

Fig. 58 Crankshaft Rear Oil Seal Removal

1 - REAR CRANKSHAFT SEAL
2 - SPECIAL TOOL 8506

NOTE: This procedure can be performed in vehicle.

(1) If being performed in vehicle, remove the transmission.

(2) Remove the flexplate (Refer to 9 - ENGINE/ENGINE BLOCK/FLEX PLATE - REMOVAL).

NOTE: The crankshaft oil seal CAN NOT be reused after removal.

NOTE: The crankshaft rear oil seal remover Special Tool 8506 must be installed deeply into the seal. Continue to tighten the removal tool into the seal until the tool can not be turned farther. Failure to install tool correctly the first time will cause tool to pull free of seal without removing seal from engine.

(3) Using Special Tool 8506 (2), remove the crankshaft rear oil seal (Fig. 58)(1)

INSTALLATION

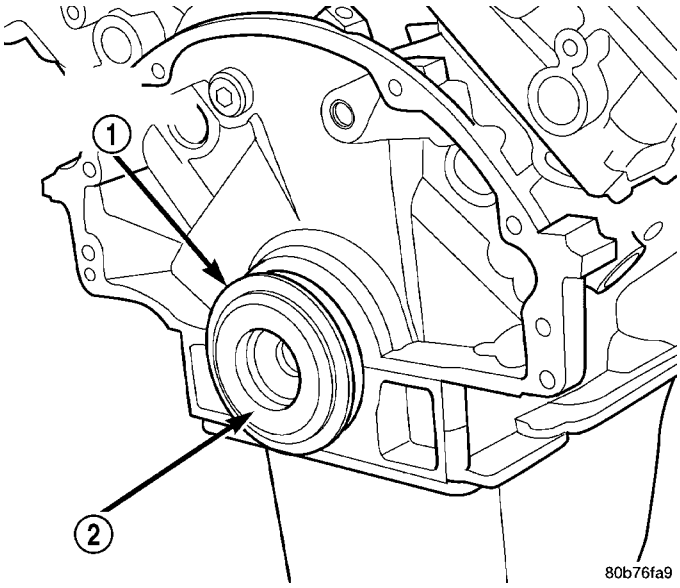

Fig. 59 Crankshaft Rear Oil Seal Guide Special Tool 8349-2 and Oil

1 - REAR CRANKSHAFT SEAL
2 - SPECIAL TOOL 8349-2 GUIDE

(1) Lubricate the crankshaft flange with engine oil.

(2) Position the magnetic seal guide Special Tool 8349-2 onto the crankshaft rear face (Fig. 59). Then position the crankshaft rear oil seal (1) onto the guide (2).

CRANKSHAFT OIL SEAL - REAR (Continued)

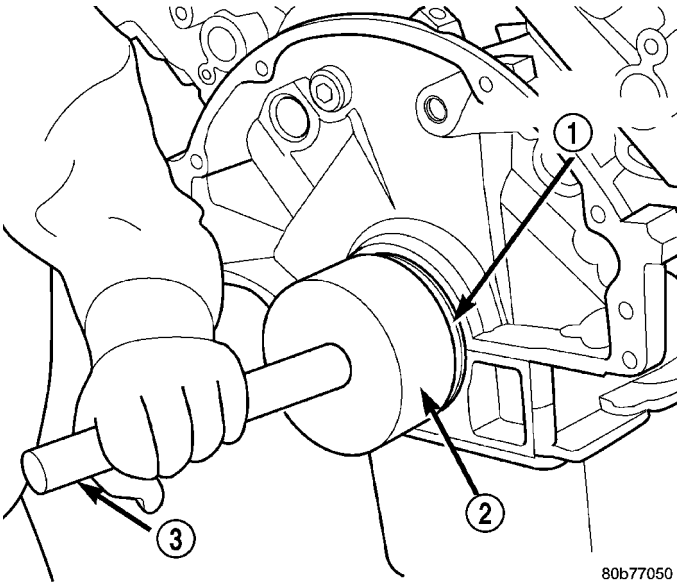

Fig. 60 Crankshaft Rear Oil Seal Installation

1 - REAR CRANKSHAFT SEAL
2 - SPECIAL TOOL 8349-1 INSTALLER
3 - SPECIAL TOOL C-4171 HANDLE

(3) Using Special Tools 8349 Crankshaft Rear Oil Seal Installer (2) and C-4171 Driver Handle (3), with a hammer, tap the seal (1) into place (Fig. 60). Continue to tap on the driver handle until the seal installer seats against the cylinder block crankshaft bore.

(4) Install the flexplate.

(5) Install the transmission.

FLEX PLATE

REMOVAL

(1) Remove the transmission.

(2) Remove the bolts and flexplate.

INSTALLATION

(1) Position the flexplate onto the crankshaft and install the bolts hand tight.

(2) Tighten the flexplate retaining bolts to 95 N·m (70 ft. lbs.) in the sequence shown (Fig. 61).

(3) Install the transmission.

PISTON & CONNECTING ROD

DESCRIPTION

CAUTION: Do not use a metal stamp to mark connecting rods as damage may result, instead use ink or a scratch awl.

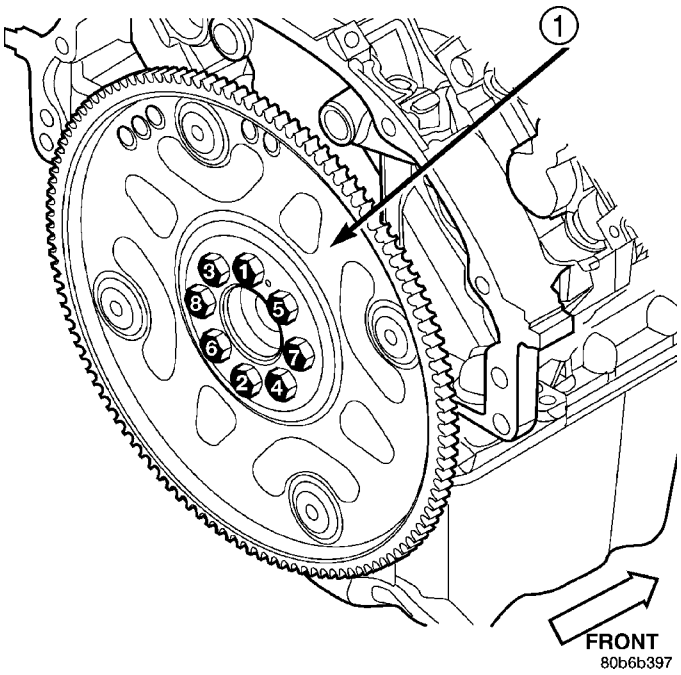

Fig. 61 Flexplate Tightening Sequence

1 - FLEXPLATE

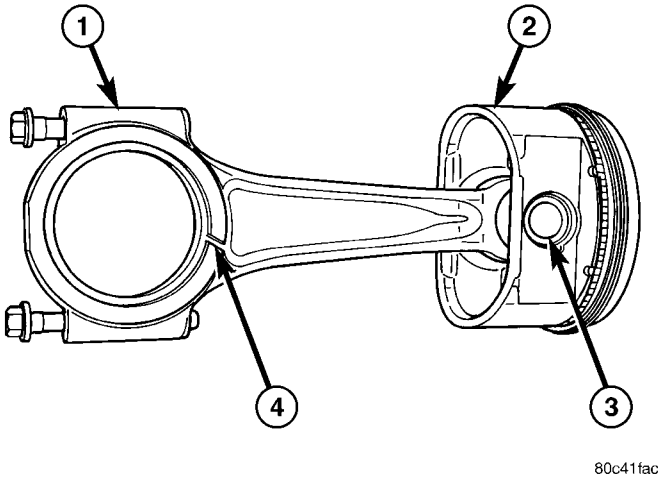

Fig. 62 PISTON AND ROD ASSEMBLY

1 - CONNECTING ROD
2 - PISTON
3 - PISTON PIN
4 - OIL SLINGER SLOT

The pistons (Fig. 62)(2) are made of a high strength aluminum alloy. The connecting rods (1) are made of forged powdered metal, with a “fractured cap” design. A full floating piston pin is used to attach the piston to the connecting rod.

PISTON & CONNECTING ROD (Continued)

STANDARD PROCEDURE

CONNECTING ROD BEARING FITTING

Inspect the connecting rod bearings for scoring. Check the bearings for normal wear patterns, scoring, grooving, fatigue and pitting (Fig. 63). Replace any bearing that shows abnormal wear.

Inspect the connecting rod journals for signs of scoring, nicks and burrs (Fig. 64).

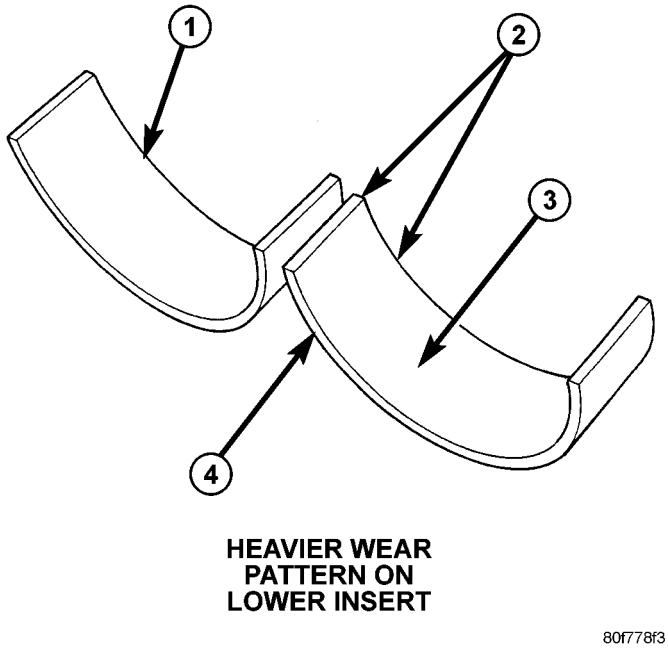

Fig. 63 Connecting Rod Bearing Inspection

1 - UPPER BEARING HALF
2 - MATING EDGES
3 - GROOVES CAUSED BY ROD BOLTS SCRATCHING JOURNAL DURING INSTALLATION
4 - WEAR PATTERN - ALWAYS GREATER ON UPPER BEARING

Misaligned or bent connecting rods can cause abnormal wear on pistons, piston rings, cylinder walls, connecting rod bearings and crankshaft connecting rod journals. If wear patterns or damage to any of these components indicate the probability of a misaligned connecting rod, inspect it for correct rod alignment. Replace misaligned, bent or twisted connecting rods.

(1) Wipe the oil from the connecting rod journal.

(2) Lubricate the upper bearing insert and position in connecting rod. Center bearing insert in connecting rod (Fig. 65)

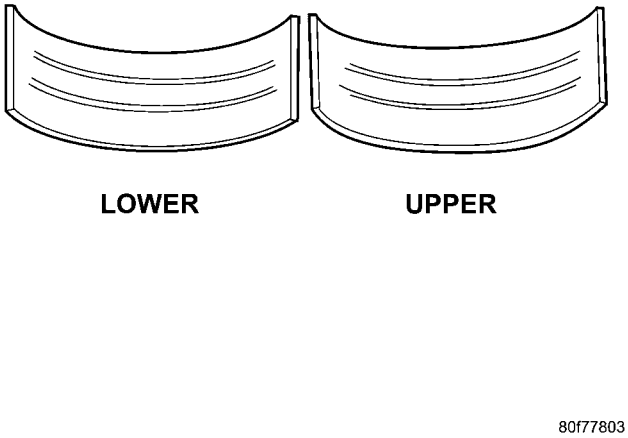

Fig. 64 Scoring Caused by Insufficient Lubrication or Damaged Crankshaft Journal

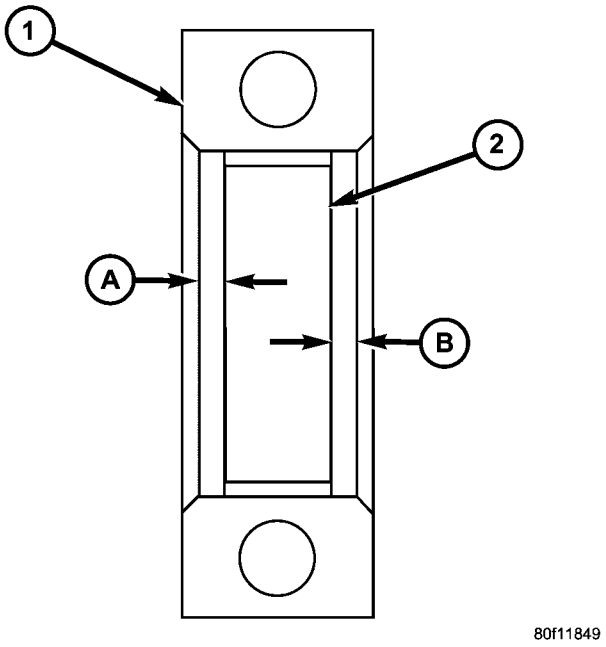

Fig. 65 Bearing Insert Location

1 - CONNECTING ROD
2 - BEARING INSERT
3 - A MINUS B, LESS THEN .50 mm (.0196 in.)

PISTON & CONNECTING ROD (Continued)

(3) Use piston ring compressor and Guide Pins Special Tool 8507 (Fig. 66) to install the rod and piston assemblies. The oil slinger slots in the rods must face front of the engine. The “F”’s near the piston wrist pin bore should point to the front of the engine.

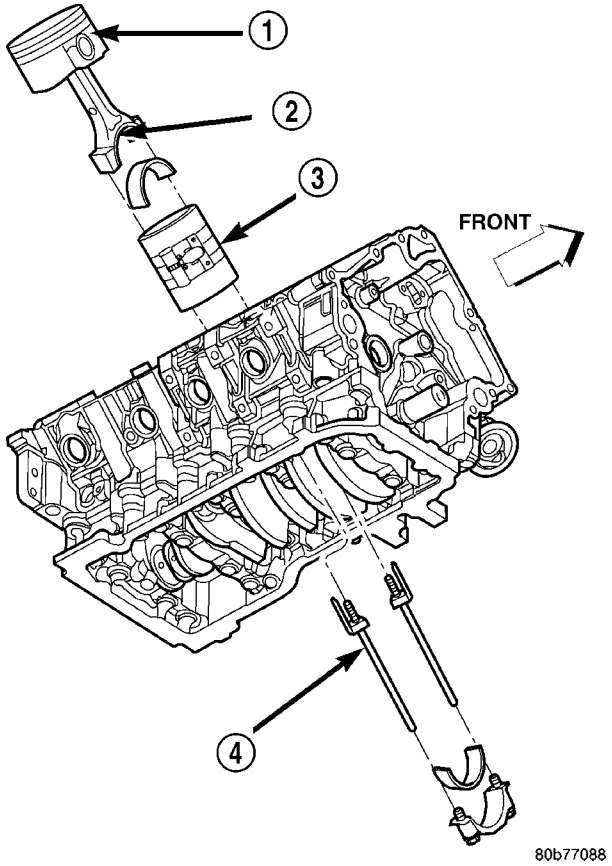

Fig. 66 Piston and Connecting Rod - Installation - Typical

1 - “F” TOWARD FRONT OF ENGINE
2 - OIL SLINGER SLOT
3 - RING COMPRESSOR
4 - SPECIAL TOOL 8507

(4) Install the lower bearing insert in the bearing cap. Center bearing insert in connecting rod (Fig. 65). The lower insert must be dry. Place strip of Plastigage across full width of the lower insert at the center of bearing cap. Plastigage must not crumble in use. If brittle, obtain fresh stock.

(5) Install bearing cap and connecting rod on the journal and tighten bolts to 27 N·m (20 ft. lbs.) plus a 90° turn. DO NOT rotate crankshaft. Plastigage will smear, resulting in inaccurate indication.

(6) Remove the bearing cap and determine amount of bearing-to-journal clearance by measuring the width of compressed Plastigage (Fig. 67). Refer to Engine Specifications for the proper clearance. **Plastigage should indicate the same clearance across the entire width of the insert. If the clearance varies, it may be caused by either a tapered journal, bent connecting rod or foreign material trapped between the insert and cap or rod.**

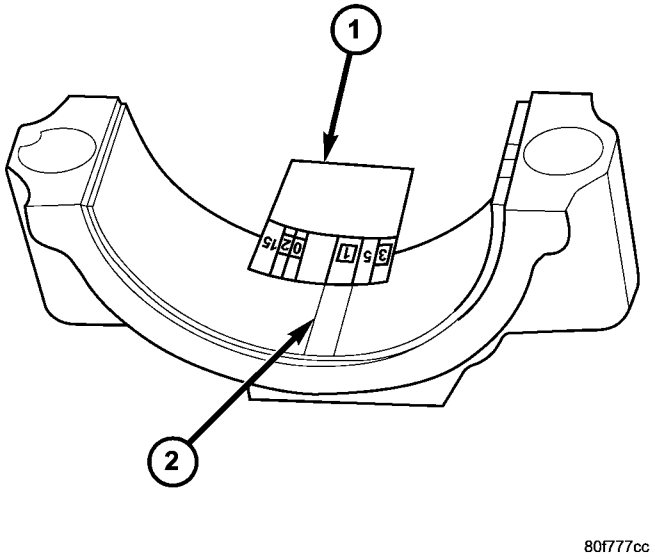

Fig. 67 Measuring Bearing Clearance with Plastigage

1 - PLASTIGAGE SCALE
2 - COMPRESSED PLASTIGAGE

(7) If the correct clearance is indicated, replacement of the bearing inserts is not necessary. Remove the Plastigage from crankshaft journal and bearing insert. Proceed with installation.

(8) If bearing-to-journal clearance exceeds the specification, determine which services bearing set to use the bearing sizes are as follows:

Bearing Mark	SIZE	USED WITH JOURNAL SIZE
.025 US	.025 mm (.001 in.)	57.883-57.871 mm (2.2788-2.2783 in.)
Std.	STANDARD	57.908-57.892 mm (2.2798-2.2792 in.)
.250 US	.250 mm (.010 in.)	57.658-57.646 mm (2.27-2.2695 in.)

PISTON & CONNECTING ROD (Continued)

(9) Repeat the Plastigage measurement to verify your bearing selection prior to final assembly.

(10) Once you have selected the proper insert, install the insert and cap. Tighten the connecting rod bolts to 27 N·m (20 ft. lbs.) plus a 90° turn.

Slide snug-fitting feeler gauge between the connecting rod and crankshaft journal flange (Fig. 68). Refer to Engine Specifications for the proper clearance. Replace the connecting rod if the side clearance is not within specification.

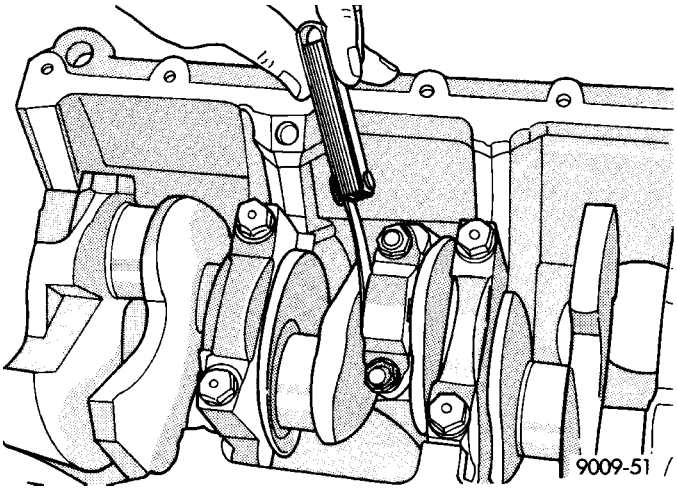

Fig. 68 Checking Connecting Rod Side Clearance - Typical

STANDARD PROCEDURE - PISTON FITTING

(1) To correctly select the proper size piston, a cylinder bore gauge, capable of reading in 0.003 mm (.0001 in.) INCREMENTS is required. If a bore gauge is not available, do not use an inside micrometer.

(2) Measure the inside diameter of the cylinder bore at a point 38.0 mm (1.5 inches) below top of bore. Start perpendicular (across or at 90 degrees) to the axis of the crankshaft at point A and then take an additional bore reading 90 degrees to that at point B (Fig. 70).

(3) The coated pistons will be serviced with the piston pin and connecting rod pre-assembled.

(4) The coating material is applied to the piston after the final piston machining process. Measuring the outside diameter of a coated piston will not provide accurate results (Fig. 69). Therefore measuring the inside diameter of the cylinder bore with a dial Bore Gauge is **MANDATORY**. To correctly select the proper size piston, a cylinder bore gauge capable of reading in 0.003 mm (.0001 in.) increments is required.

(5) Piston installation into the cylinder bore requires slightly more pressure than that required for non-coated pistons. The bonded coating on the piston will give the appearance of a line-to-line fit with the cylinder bore.

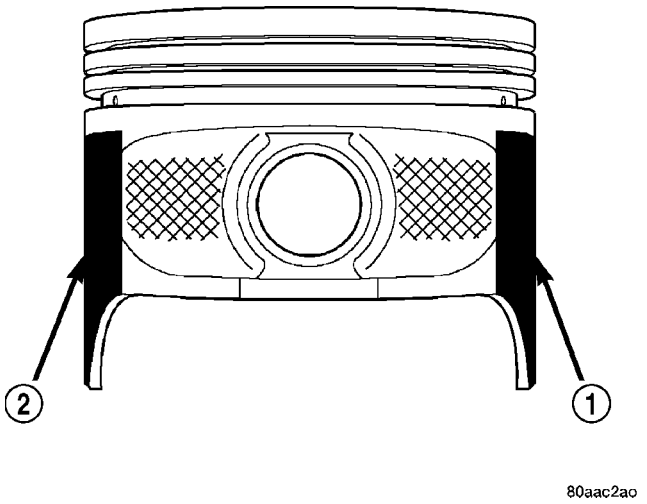

Fig. 69 DO NOT MEASURE MOLY COATED PISTON

1 - MOLY COATED
2 - MOLY COATED

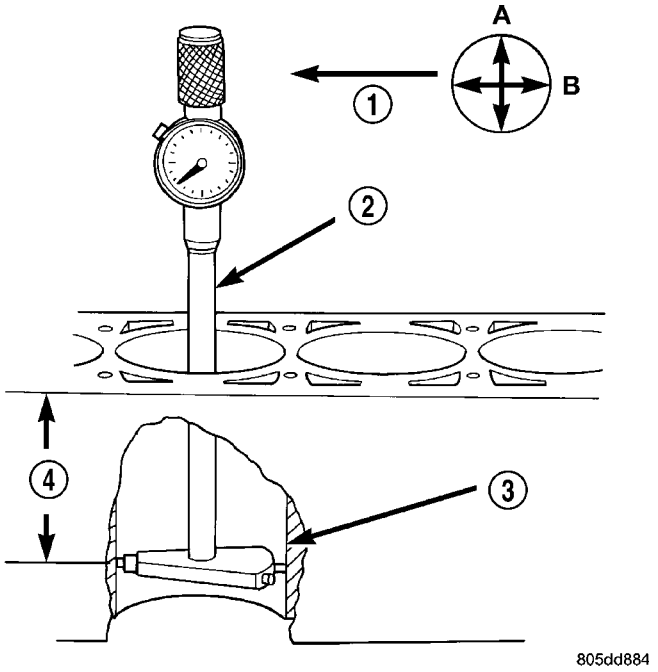

Fig. 70 Bore Gauge - Typical

1 - FRONT
2 - BORE GAUGE
3 - CYLINDER BORE
4 - 38 MM
(1.5 in)

REMOVAL

(1) Disconnect negative cable from battery.

(2) Remove the following components:

- Oil pan and gasket/windage tray (Refer to 9 - ENGINE/LUBRICATION/OIL PAN - REMOVAL).
- Cylinder head covers (Refer to 9 - ENGINE/ CYLINDER HEAD/CYLINDER HEAD COVER(S) -

PISTON & CONNECTING ROD (Continued)

REMOVAL) and (Refer to 9 - ENGINE/CYLINDER HEAD/CYLINDER HEAD COVER(S) - REMOVAL).

• Timing chain cover (Refer to 9 - ENGINE/VALVE TIMING/TIMING BELT / CHAIN COVER(S) - REMOVAL).

• Cylinder head(s) (Refer to 9 - ENGINE/CYLINDER HEAD - REMOVAL) and (Refer to 9 - ENGINE/CYLINDER HEAD - REMOVAL).

(3) If necessary, remove top ridge of cylinder bores with a reliable ridge reamer before removing pistons from cylinder block. **Be sure to keep tops of pistons covered during this operation.** Pistons and connecting rods must be removed from top of cylinder block. When removing piston and connecting rod assemblies from the engine, rotate crankshaft so the each connecting rod is centered in cylinder bore.

CAUTION: DO NOT use a number stamp or a punch to mark connecting rods or caps, as damage to connecting rods could occur

NOTE: Connecting rods and bearing caps are not interchangeable and should be marked before removing to ensure correct reassembly.

(4) Mark connecting rod and bearing cap positions using a permanent ink marker or scribe tool.

CAUTION: Care must be taken not to damage the fractured rod and cap joint face surfaces, as engine damage may occur.

(5) Remove connecting rod cap. Install Special Tool 8507 Connecting Rod Guides into the connecting rod being removed. Remove piston from cylinder bore. Repeat this procedure for each piston being removed.

CAUTION: Care must be taken not to nick crankshaft journals, as engine damage may occur

(6) Immediately after piston and connecting rod removal, install bearing cap on the mating connecting rod to prevent damage to the fractured cap and rod surfaces.

CLEANING

CAUTION: DO NOT use a wire wheel or other abrasive cleaning devise to clean the pistons or connecting rods. The pistons have a Moly coating, this coating must not be damaged.

(1) Using a suitable cleaning solvent clean the pistons in warm water and towel dry.

(2) Use a wood or plastic scraper to clean the ring land grooves.

CAUTION: DO NOT remove the piston pin from the piston and connecting rod assembly.

INSPECTION

Check the connecting rod journal for excessive wear, taper and scoring (Refer to 9 - ENGINE/ENGINE BLOCK/CONNECTING ROD BEARINGS - STANDARD PROCEDURE).

Check the connecting rod for signs of twist or bending.

Check the piston for taper and elliptical shape before it is fitted into the cylinder bore (Refer to 9 - ENGINE/ENGINE BLOCK/PISTON & CONNECTING ROD - STANDARD PROCEDURE).

Check the piston for scoring, or scraping marks in the piston skirts. Check the ring lands for cracks and/or deterioration.

INSTALLATION

(1) Before installing piston and connecting rod assemblies into the bore, install the piston rings.

(2) Immerse the piston head and rings in clean engine oil. Position a ring compressor over the piston and rings. Tighten ring compressor. **Ensure position of rings do not change during this operation.**

(3) Position bearing onto connecting rod. Ensure that tabs in bearing shell aligns with slots in connecting rod. Verify that parting line of bearing is aligned with parting line of connecting rod.

(4) Lubricate bearing surface with clean engine oil.

(5) Install Special Tool 8507 Connecting Rod Guides into connecting rod bolt threads (Fig. 71).

(6) The pistons are marked on the piston pin bore surface with an raised “F” indicating installation position. This mark must be pointing toward the front of engine on both cylinder banks. The connecting rod oil slinger slot faces the front of the engine (Fig. 72).

(7) Wipe cylinder bore clean and lubricate with engine oil.

(8) Rotate crankshaft until connecting rod journal is on the center of cylinder bore. Insert rod and piston into cylinder bore and carefully position connecting rod guides over crankshaft journal.

(9) Tap piston down in cylinder bore using a hammer handle. While at the same time, guide connecting rod into position on rod journal.

CAUTION: Connecting Rod Bolts are Torque to Yield Bolts and Must Not Be Reused. Always replace the Rod Bolts whenever they are loosened or removed.

PISTON & CONNECTING ROD (Continued)

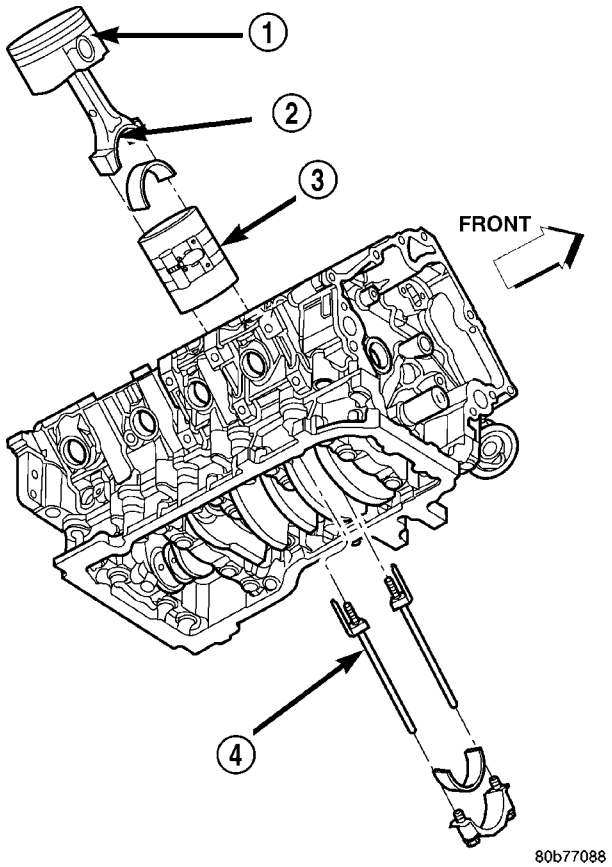

Fig. 71 Piston and Connecting Rod - Installation - Typical

1 - “F” TOWARD FRONT OF ENGINE
2 - OIL SLINGER SLOT
3 - RING COMPRESSOR
4 - SPECIAL TOOL 8507

(10) Lubricate rod bolts and bearing surfaces with engine oil. Install connecting rod cap and bearing. Tighten bolts to 27 N·m (20 ft. lbs.) plus 90°.

(11) Install the following components:

- Cylinder head(s). (Refer to 9 - ENGINE/CYLINDER HEAD - INSTALLATION).
- Timing chain and cover. (Refer to 9 - ENGINE/VALVE TIMING/TIMING BELT / CHAIN COVER(S) - INSTALLATION).
- Cylinder head covers (Refer to 9 - ENGINE/CYLINDER HEAD/CYLINDER HEAD COVER(S) - INSTALLATION).
- Oil pan and gasket/windage tray. (Refer to 9 - ENGINE/LUBRICATION/OIL PAN - INSTALLATION).

(12) Fill crankcase with proper engine oil to correct level.

(13) Connect negative cable to battery.

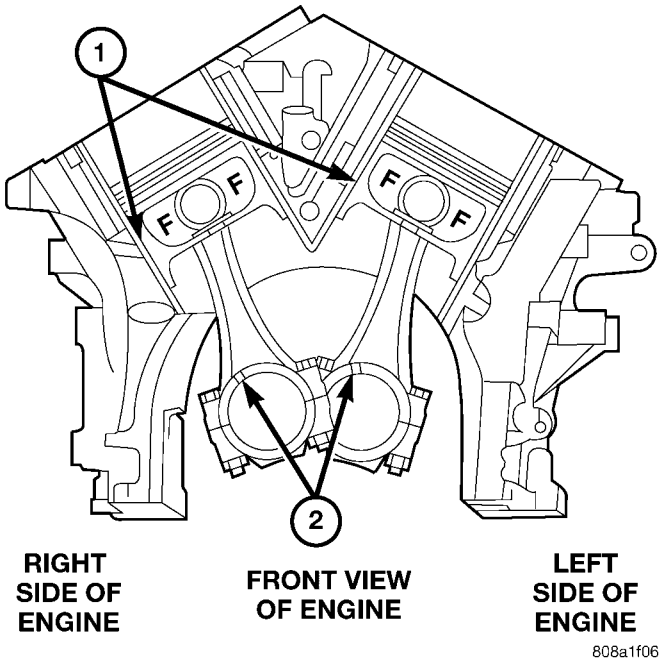

Fig. 72 Piston and Connecting Rod Orientation

1 - MAJOR THRUST SIDE OF PISTON
2 - OIL SLINGER SLOT

PISTON RINGS

STANDARD PROCEDURE - PISTON RING FITTING

Before reinstalling used rings or installing new rings, the ring clearances must be checked.

(1) Wipe the cylinder bore clean.

(2) Insert the ring in the cylinder bore.

NOTE: The ring gap measurement must be made with the ring positioned at least 12mm (0.50 inch.) from bottom of cylinder bore.

(3) Using a piston, to ensure that the ring is squared in the cylinder bore, slide the ring downward into the cylinder.

PISTON RINGS (Continued)

(4) Using a feeler gauge check the ring end gap (Fig. 73). Replace any rings not within specification.

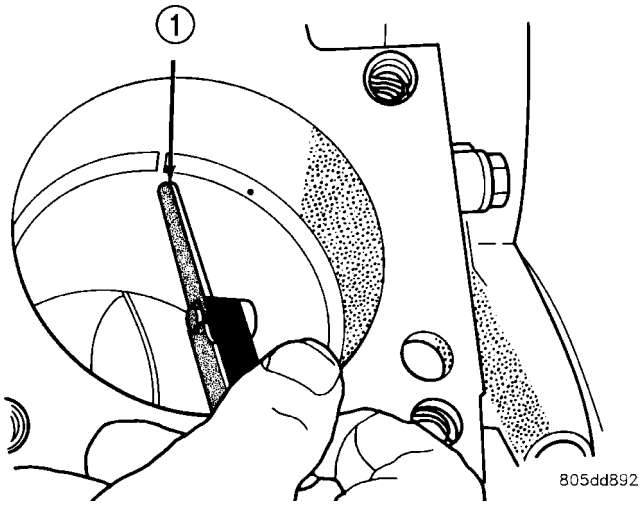

Fig. 73 Ring End Gap Measurement - Typical

1 - FEELER GAUGE

NOTE: Make sure the piston ring grooves are clean and free of nicks and burrs.

(5) Measure the ring side clearance as shown (Fig. 74)make sure the feeler gauge fits snugly between the ring land and the ring. Replace any ring not within specification.

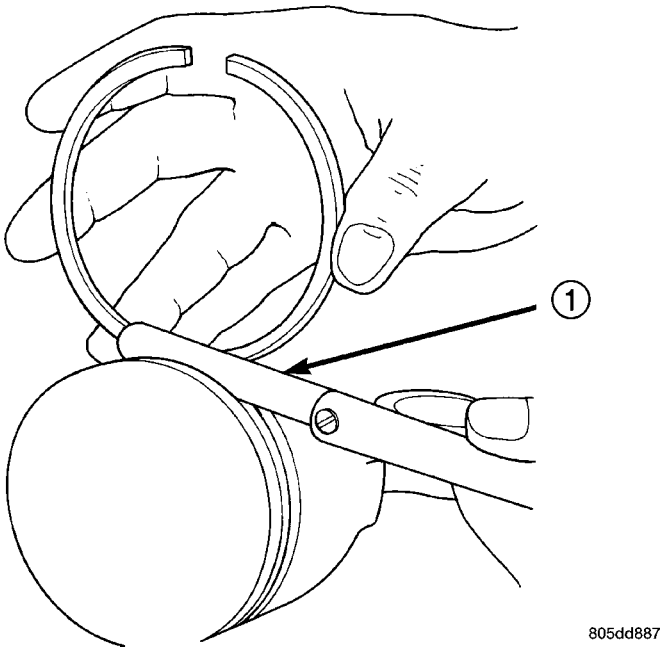

Fig. 74 Measuring Piston Ring Side Clearance

1 - FEELER GAUGE

(6) Rotate the ring around the piston, the ring must rotate in the groove with out binding.

PISTON RING SPECIFICATION CHART

Ring Position	Groove Clearance	Maximum Clearance
Upper Ring	.051-.094mm (0.0020- .0037 in.)	0.11mm (0.004 in.)
Intermediate Ring	0.04-0.08mm (0.0016-0.0031 in.)	0.10mm (0.004 in.)
Oil Control Ring (Steel Rails)	.019-.229mm (.0007-.0090 in.)	.25mm (0.010 in.)
Ring Position	**Ring Gap**	**Wear Limit**
Upper Ring	0.20-0.36mm (0.0079-0.0142 in.)	0.43mm (0.0142 in.)
Intermediate Ring	0.37-0.63mm (0.015-0.026 in.)	0.74mm (0.029 in.)
Oil Control Ring (Steel Rail)	0.025-0.76mm (0.0099- 0.030 in.)	1.55mm (0.061 in.)

(7) The No. 1 and No. 2 piston rings have a different cross section. Ensure No. 2 ring is installed with manufacturers I.D. mark (Dot) facing up, towards top of the piston.

NOTE: Piston rings are installed in the following order:

- **Oil ring expander.**
- **Upper oil ring side rail.**
- **Lower oil ring side rail.**
- **No. 2 Intermediate piston ring.**
- **No. 1 Upper piston ring.**

(8) Install the oil ring expander.

PISTON RINGS (Continued)

(9) Install upper side rail (Fig. 75) by placing one end between the piston ring groove and the expander ring. Hold end firmly and press down the portion to be installed until side rail is in position. Repeat this step for the lower side rail.

(10) Install No. 2 intermediate piston ring using a piston ring installer (Fig. 76).

(11) Install No. 1 upper piston ring using a piston ring installer (Fig. 76).

(12) Position piston ring end gaps as shown in (Fig. 77). It is important that expander ring gap is at least 45° from the side rail gaps, but not on the piston pin center or on the thrust direction.

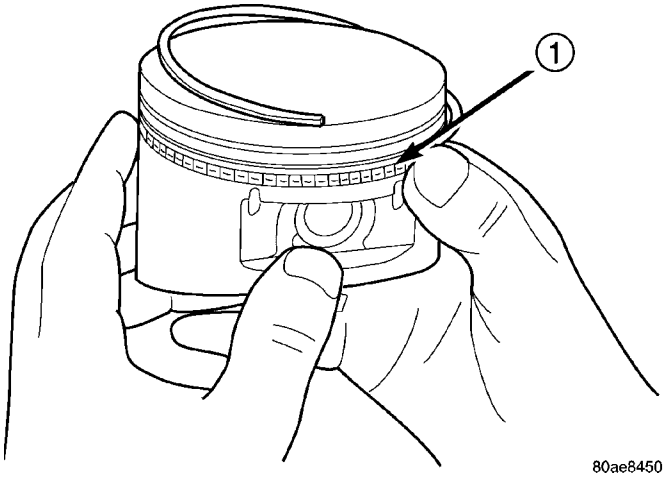

Fig. 75 Side Rail—Installation

1 - SIDE RAIL END

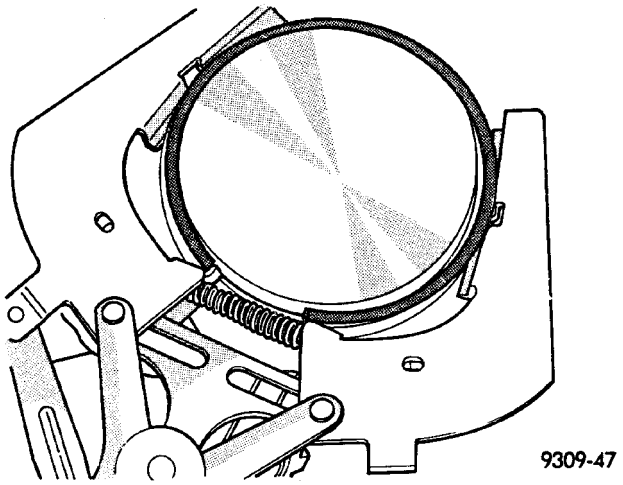

Fig. 76 Upper and Intermediate Rings—Installation

VIBRATION DAMPER

REMOVAL

(1) Disconnect negative cable from battery.

(2) Remove accessory drive belt (Refer to 7 - COOLING/ACCESSORY DRIVE/DRIVE BELTS - REMOVAL).

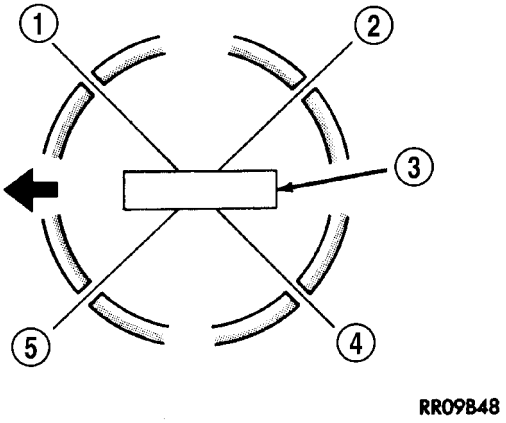

Fig. 77 Piston Ring End Gap Position

1 - SIDE RAIL UPPER
2 - NO. 1 RING GAP
3 - PISTON PIN
4 - SIDE RAIL LOWER
5 - NO. 2 RING GAP AND SPACER EXPANDER GAP

NOTE: Transmission cooler line snaps into shroud lower right hand corner.

(3) Remove crankshaft damper bolt.

(4) Remove damper using Special Tools 8513 Insert and 1026 Three Jaw Puller (Fig. 78).

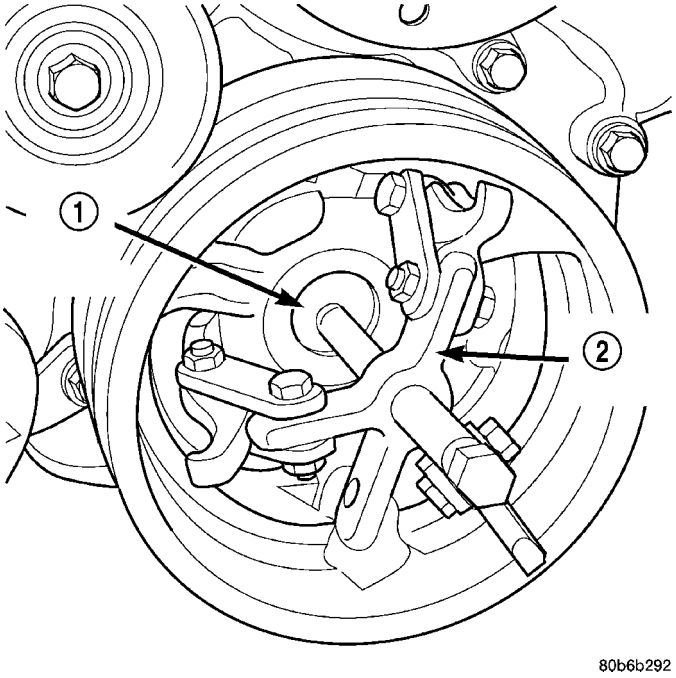

Fig. 78 Crankshaft Damper—Removal

1 - SPECIAL TOOL 8513 INSERT
2 - SPECIAL TOOL 1026

VIBRATION DAMPER (Continued)

INSTALLATION

CAUTION: To prevent severe damage to the Crankshaft, Damper or Special Tool 8512, thoroughly clean the damper bore and the crankshaft nose before installing Damper.

(1) Align crankshaft damper slot with key in crankshaft. Slide damper onto crankshaft slightly.

CAUTION: Special Tool 8512A, is assembled in a specific sequence. Failure to assemble this tool in this sequence can result in tool failure and severe damage to either the tool or the crankshaft.

(2) Assemble Special Tool 8512–A as follows, The nut is threaded onto the shaft first. Then the roller bearing is placed onto the threaded rod (The hardened bearing surface of the bearing **MUST**face the nut). Then the hardened washer slides onto the threaded rod (Fig. 79). Once assembled coat the threaded rod's threads with Mopar® Nickel Anti-Seize or (Loctite No. 771).

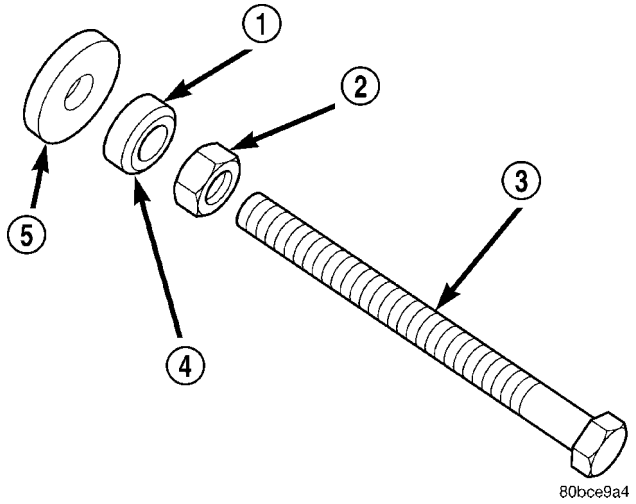

Fig. 79 Proper Assembly Method for Special Tool 8512–A

1 - BEARING
2 - NUT
3 - THREADED ROD
4 - BEARING HARDENED SURFACE (FACING NUT)
5 - HARDENED WASHER

(3) Using Special Tool 8512A, press damper onto crankshaft (Fig. 80).

(4) Install then tighten crankshaft damper bolt to 175 N·m (130 ft. lbs.).

(5) Install accessory drive belt (Refer to 7 - COOLING/ACCESSORY DRIVE/DRIVE BELTS - INSTALLATION).

(6) Connect negative cable to battery.

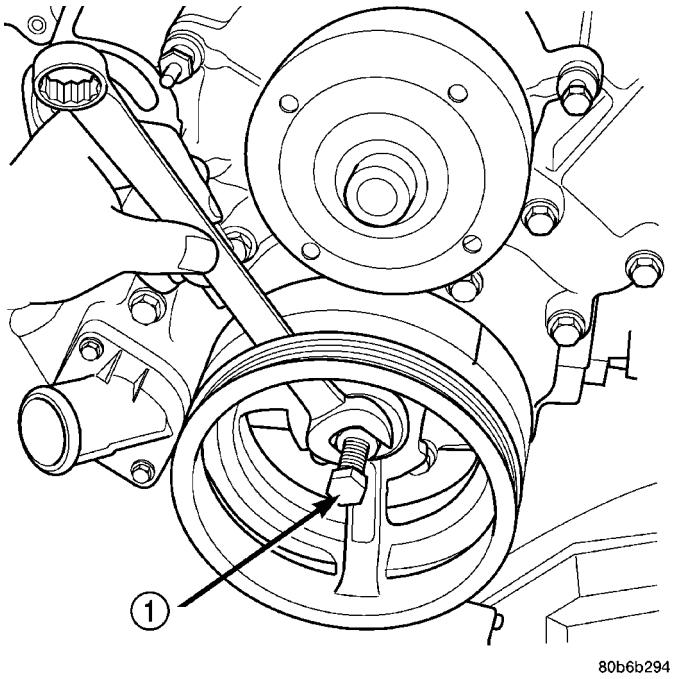

Fig. 80 Crankshaft Damper Installation

1 - SPECIAL TOOL 8512A

STRUCTURAL COVER

DESCRIPTION

The structural dust cover is made of die cast aluminum and joins the lower half of the transmission bell housing to the engine bedplate.

OPERATION

The structural cover provides additional powertrain stiffness and reduces noise and vibration.

REMOVAL

(1) Raise vehicle on hoist.

(2) Remove the bolts retaining structural cover (Fig. 81).

(3) Remove the structural cover.

INSTALLATION

CAUTION: The structural cover must be installed as described in the following steps. Failure to do so will cause severe damage to the cover.

(1) Position the structural cover in the vehicle.

(2) Install all bolts retaining the cover-to-engine. DO NOT tighten the bolts at this time.

(3) Install the cover-to-transmission bolts. Do NOT tighten at this time.

STRUCTURAL COVER (Continued)

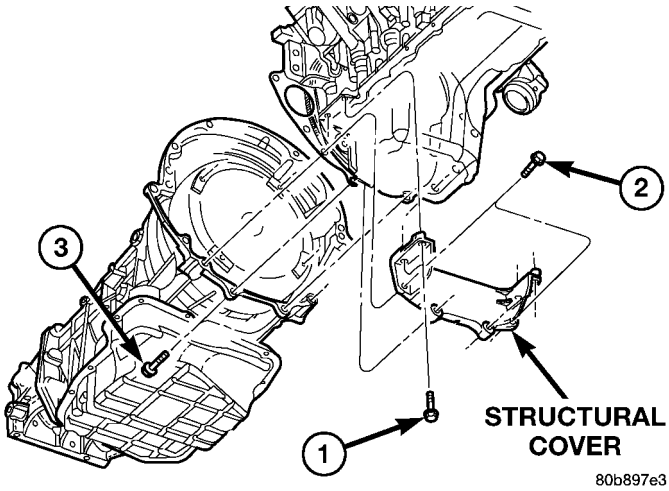

Fig. 81 Structural Cover

1 - BOLT
2 - BOLT
3 - BOLT

CAUTION: The structural cover must be held tightly against both the engine and the transmission bell housing during tightening sequence. Failure to do so may cause damage to the cover.

(4) Starting with the two rear cover-to-engine bolts, tighten bolts (1) (Fig. 82) to 54 N·m (40 ft. lbs.), then tighten bolts (2) (Fig. 82) and (3) to 54 N·m (40 ft. lbs.) in the sequence shown.

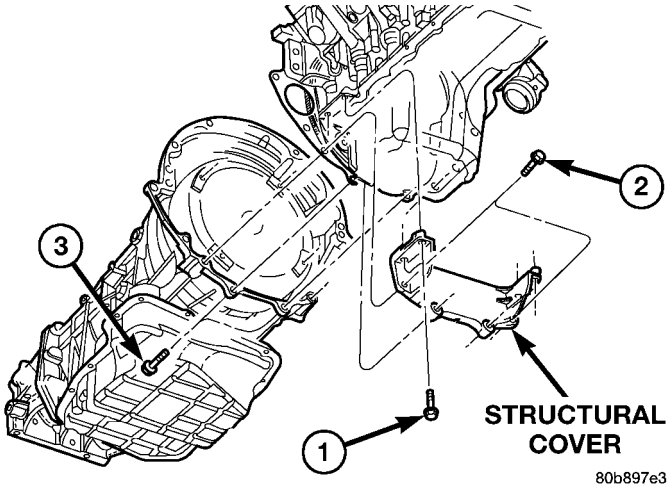

Fig. 82 Structural Cover

1 - BOLT
2 - BOLT
3 - BOLT

FRONT MOUNT

REMOVAL

(1) Disconnect the negative cable from the battery.

CAUTION: Remove the fan blade, fan clutch and fan shroud before raising engine. Failure to do so may cause damage to the fan blade, fan clutch and fan shroud.

(2) Remove the fan blade, fan clutch and fan shroud. Refer to COOLING SYSTEM for procedure.

(3) Remove the engine oil filter.

(4) Support the engine with a suitable jack and a block of wood across the full width of the engine oil pan.

(5) Remove the four (4) cylinder block-to-insulator mount bolts and the nut from the engine insulator mount through bolt.

(6) Using the jack, raise the engine high enough to remove the engine insulator mount through bolt and the insulator mount (Fig. 83) and (Fig. 84).

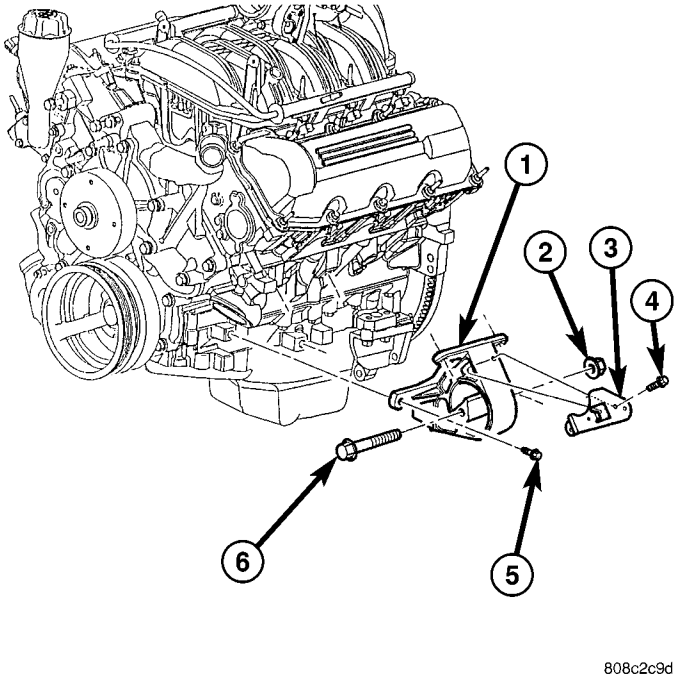

Fig. 83 Engine Insulator Mount 3.7 Left

1 -MOUNT
2 - NUT
3 - SHIELD
4 - FASTENER
5 - BOLT
6 - THRU BOLT

INSTALLATION

(1) Position the insulator mount and install the insulator mount through bolt.

(2) Lower the engine until the cylinder block-to-insulator mount bolts can be installed.

(3) Remove the jack and block of wood.

(4) Torque the cylinder block-to-insulator mount bolts to 61 N·m (45 ft. lbs.).

(5) Install and torque the through bolt retaining nut to 61 N·m (45 ft. lbs.).

FRONT MOUNT (Continued)

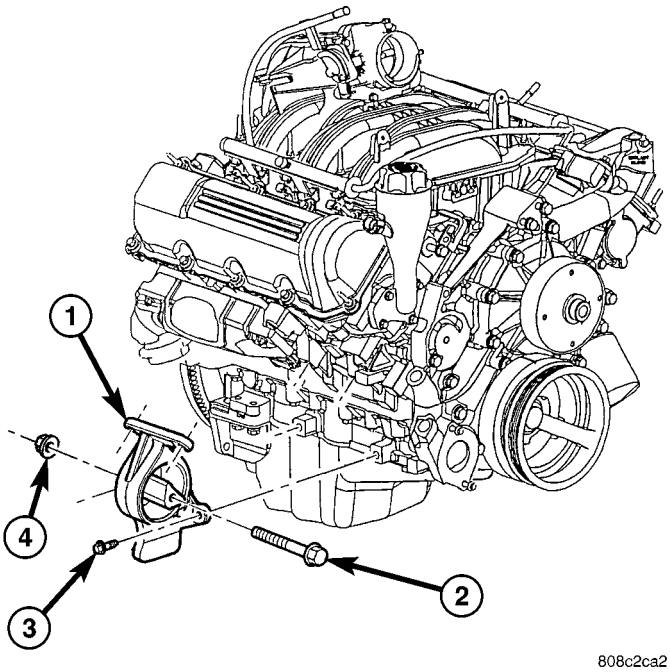

Fig. 84 Engine Insulator Mount 3.7 Right

1 - MOUNT
2 - THRU BOLT
3 - BOLT
4 - NUT

(6) Install the fan blade, fan clutch and fan shroud.

REAR MOUNT

REMOVAL

NOTE: A resilient rubber cushion supports the transmission at the rear between the transmission extension housing and the rear support crossmember or skid plate.

(1) Disconnect negative cable from battery.
(2) Raise the vehicle and support the transmission.
(3) Remove the nuts holding the support cushion to the crossmember. Remove the crossmember.

MANUAL TRANSMISSION

a. Remove the support cushion nuts and remove the cushion.

b. Remove the transmission support bracket bolts and remove the bracket from the transmission.

AUTOMATIC TRANSMISSION

a. Remove the support cushion bolts and remove the cushion and the support bracket from the transmission (4WD) or from the adaptor bracket (2WD).

b. On 2WD vehicles, remove the bolts holding the transmission support adaptor bracket to the transmission. Remove the adaptor bracket.

INSTALLATION

MANUAL TRANSMISSION:

(1) Install the support cushion to the transmission (Fig. 85)or (Fig. 86). Install the bolts and tighten.

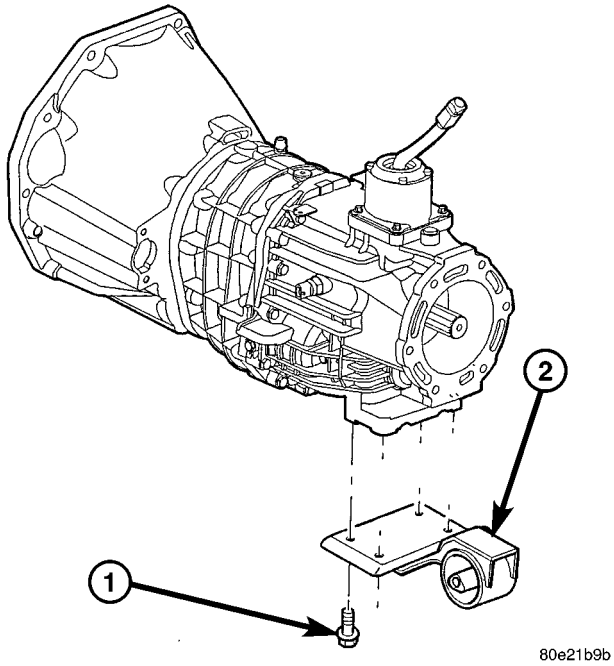

Fig. 85 TRANSMISSION MOUNT - 2.4L MANUAL TRANS

1 - TRANSMISSION MOUNT
2 - MOUNTING BOLT

(2) Position the crossmember in the vehicle. Install the crossmember to mount through bolt and nut.
(3) Install crossmember-to-sill bolts and tighten to 41 N·m (30 ft. lbs.) torque.
(4) Remove the transmission support.
(5) Lower the vehicle.
(6) Connect negative cable to battery.

REAR MOUNT (Continued)

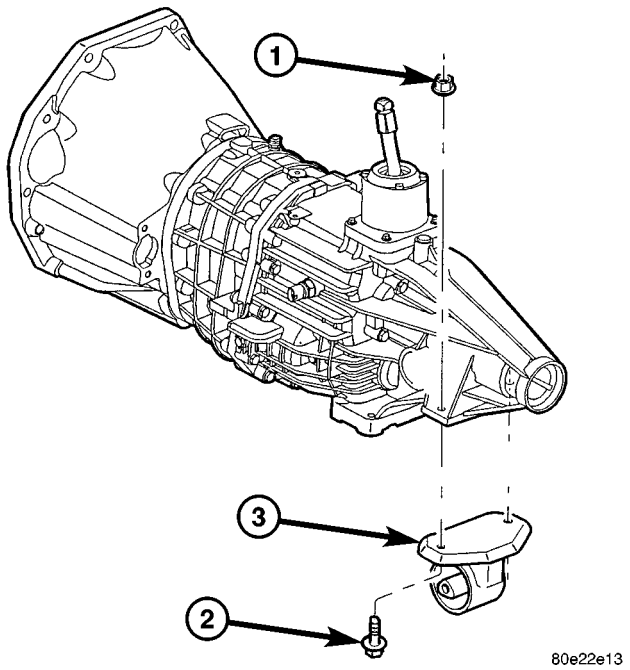

Fig. 86 TRANSMISSION MOUNT - 3.7L MANUAL TRANS 2WD

1 - NUT
2 - BOLT
3 - TRANS MOUNT

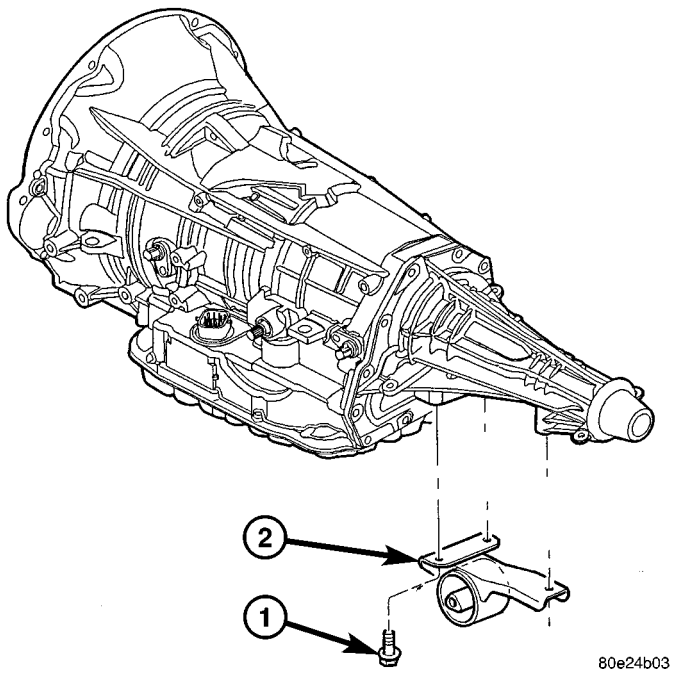

Fig. 87 TRANSMISSION MOUNT - 3.7L 2WD AUTO TRANS

1 - BOLT
2 - MOUNT

AUTOMATIC TRANSMISSION:

(1) Install the transmission mount to transmission (Fig. 87) and (Fig. 88). Install the bolts.

(2) Position the crossmember in the vehicle. Install the crossmember to mount through bolt and nut.

(3) Remove the transmission support.

(4) Lower the vehicle.

(5) Connect negative cable to battery.

LUBRICATION

DESCRIPTION

The lubrication system is a full flow filtration pressure feed type.

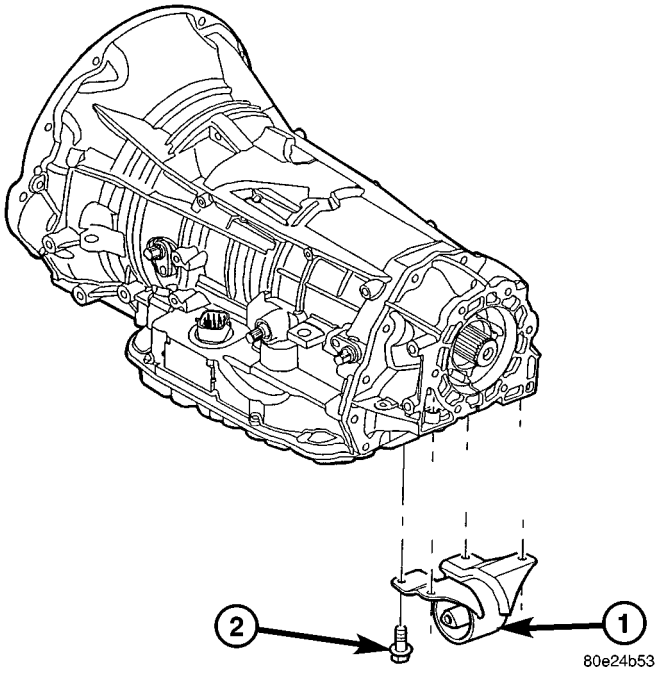

Fig. 88 TRANSMISSION MOUNT - 3.7L 4WD AUTO TRANS

1 - MOUNT
2 - BOLT

LUBRICATION (Continued)

OPERATION

ENGINE LUBRICATION FLOW CHART - BLOCK: TABLE 1

FROM	TO
Oil Pickup Tube	Oil Pump
Oil Pump	Oil Filter
Oil Filter	Block Main Oil Gallery
Block Main Oil Gallery	1. Crankshaft Main Journal 2. Left Cylinder Head* 3. Right Cylinder Head* 4. Counterbalance Shaft Rear Journal
Crankshaft Main Journals	Crankshaft Rod Journals
Crankshaft Number One Main Journal	1. Front Timing Chain Idler Shaft 2. Counterbalance Shaft - Front Journal 3. Both Secondary Chain Tensioners
Left Cylinder Head	Refer to Engine Lubrication Flow Chart - Cylinder Heads: Table 2
Right Cylinder Head	Refer to Engine Lubrication Flow Chart - Cylinder Heads: Table 2
* The cylinder head gaskets have an oil restricter to control oil flow to the cylinder heads	

ENGINE LUBRICATION FLOW CHART - CYLINDER HEADS: TABLE 2

FROM	TO
Cylinder Head Oil Port (in bolt hole)	Diagonal Cross Drilling to Main Oil Gallery
Main Oil Gallery (drilled through head from rear to front)	1. Base of Camshaft Towers 2. Lash Adjuster Towers
Base of Camshaft Towers	Vertical Drilling Through Tower to Camshaft Bearings**
Lash Adjuster Towers	Diagonal Drillings to Hydraulic Lash Adjuster Pockets
** The number three camshaft bearing journal feeds oil into the hollow camshaft tubes. Oil is routed to the intake lobes, which have oil passages drilled into them to lubricate the rocker arms.	

LUBRICATION (Continued)

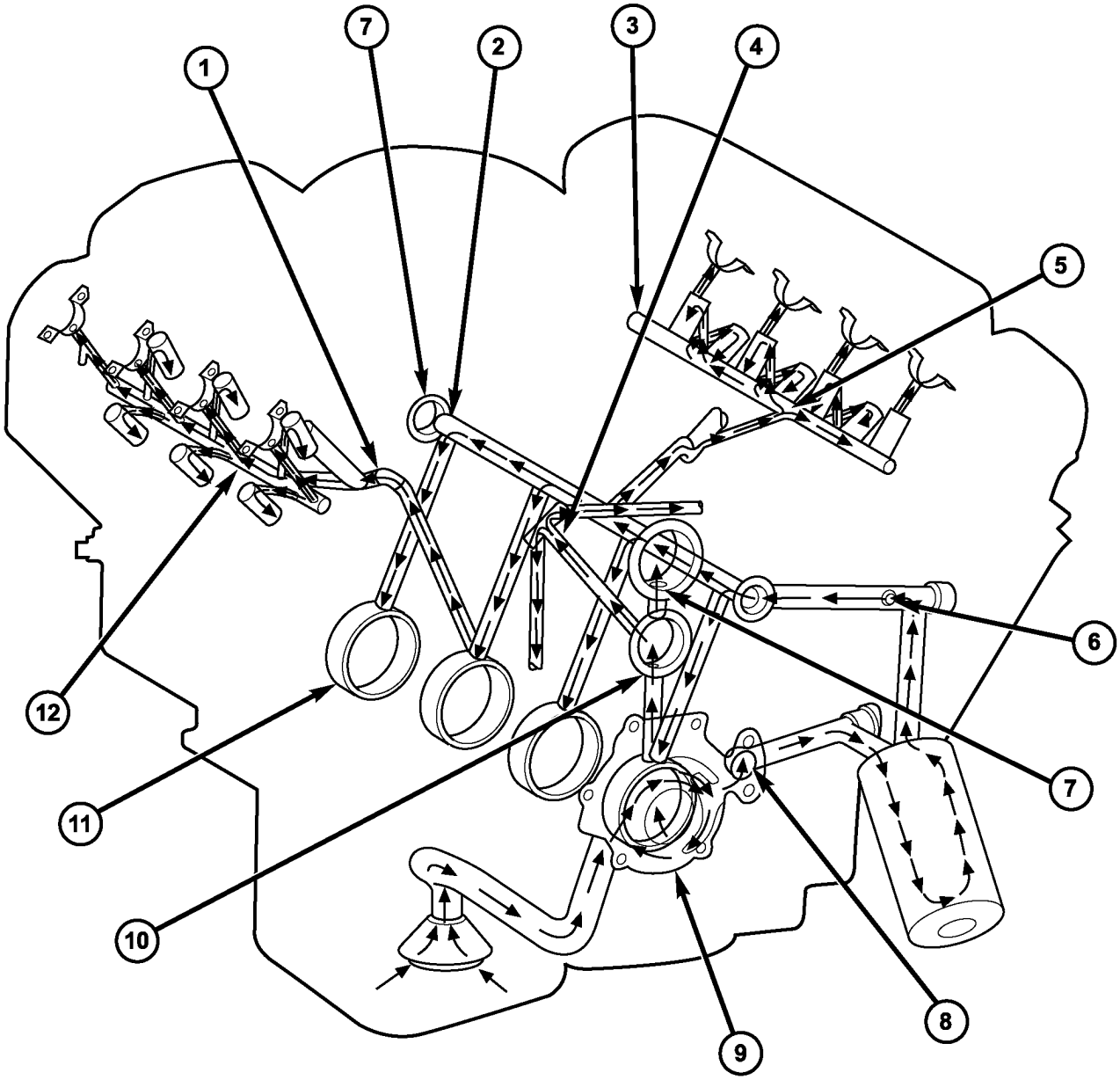

80bbb21e

Fig. 89 LUBRICATION OIL FLOW

1 - OIL FLOW TO RIGHT CYLINDER HEAD
2 - CYLINDER BLOCK MAIN OIL GALLERY
3 - LEFT CYLINDER HEAD OIL GALLERY
4 - OIL FLOW TO BOTH SECONDARY TENSIONERS
5 - OIL FLOW TO LEFT CYLINDER HEAD
6 - OIL PRESSURE SENSOR LOCATION
7 - OIL FLOW TO COUNTER BALANCE SHAFT
8 - OIL PUMP OUTLET TO CYLINDER BLOCK
9 - OIL PUMP
10 - OIL FLOW TO CRANKSHAFT MAIN JOURNALS
11 - CRANKSHAFT MAIN BEARING JOURNALS
12 - RIGHT CYLINDER HEAD OIL GALLERY

LUBRICATION (Continued)

Oil from the oil pan is pumped by a gerotor type oil pump (9) directly mounted to the crankshaft nose. Oil pressure is controlled by a relief valve mounted inside the oil pump housing.

The camshaft exhaust valve lobes and rocker arms are lubricated through a small hole in the rocker arm; oil flows through the lash adjuster then through the rocker arm and onto the camshaft lobe. Due to the orientation of the rocker arm, the camshaft intake lobes are not lubed in the same manner as the exhaust lobes. The intake lobes are lubed through internal passages in the camshaft. Oil flows through a bore in the No. 3 camshaft bearing bore, and as the camshaft turns, a hole in the camshaft aligns with the hole in the camshaft bore allowing engine oil to enter the camshaft tube (Fig. 89). The oil then exits through 1.6mm (0.063 in.) holes drilled into the intake lobes, lubricating the lobes and the rocker arms.

DIAGNOSIS AND TESTING

DIAGNOSIS AND TESTING - ENGINE OIL LEAK

Begin with a thorough visual inspection of the engine, particularly at the area of the suspected leak. If an oil leak source is not readily identifiable, the following steps should be followed:

(1) Do not clean or degrease the engine at this time because some solvents may cause rubber to swell, temporarily stopping the leak.

(2) Add an oil soluble dye (use as recommended by manufacturer). Start the engine and let idle for approximately 15 minutes. Check the oil dipstick to make sure the dye is thoroughly mixed as indicated with a bright yellow color under a black light.

(3) Using a black light, inspect the entire engine for fluorescent dye, particularly at the suspected area of oil leak. If the oil leak is found and identified, repair per service manual instructions.

(4) If dye is not observed, drive the vehicle at various speeds for approximately 24 km (15 miles), and repeat inspection. **If the oil leak source is not positively identified at this time**, proceed with the air leak detection test method.

Air Leak Detection Test Method

(1) Disconnect the breather cap to air cleaner hose at the breather cap end. Cap or plug breather cap nipple.

(2) Remove the PCV valve from the cylinder head cover. Cap or plug the PCV valve grommet.

(3) Attach an air hose with pressure gauge and regulator to the dipstick tube.

CAUTION: Do not subject the engine assembly to more than 20.6 kPa (3 PSI) of test pressure.

(4) Gradually apply air pressure from 1 psi to 2.5 psi maximum while applying soapy water at the suspected source. Adjust the regulator to the suitable test pressure that provide the best bubbles which will pinpoint the leak source. If the oil leak is detected and identified, repair per service manual procedures.

(5) If the leakage occurs at the rear oil seal area, refer to the section, Inspection for Rear Seal Area Leak.

(6) If no leaks are detected, turn off the air supply and remove the air hose and all plugs and caps. Install the PCV valve and breather cap hose.

(7) Clean the oil off the suspect oil leak area using a suitable solvent. Drive the vehicle at various speeds approximately 24 km (15 miles). Inspect the engine for signs of an oil leak by using a black light.

INSPECTION FOR REAR SEAL AREA LEAKS

Since it is sometimes difficult to determine the source of an oil leak in the rear seal area of the engine, a more involved inspection is necessary. The following steps should be followed to help pinpoint the source of the leak.

If the leakage occurs at the crankshaft rear oil seal area:

(1) Disconnect the battery.

(2) Raise the vehicle.

(3) Remove torque converter or clutch housing cover and inspect rear of block for evidence of oil. Use a black light to check for the oil leak:

(a) Circular spray pattern generally indicates seal leakage or crankshaft damage.

(b) Where leakage tends to run straight down, possible causes are a porous block, camshaft bore cup plugs oil galley pipe plugs, oil filter runoff, and main bearing cap to cylinder block mating surfaces.

(4) If no leaks are detected, pressurize the crankcase as outlined in the, Inspection (Engine oil Leaks in general)

CAUTION: Do not exceed 20.6 kPa (3 psi).

(5) If the leak is not detected, very slowly turn the crankshaft and watch for leakage. If a leak is detected between the crankshaft and seal while slowly turning the crankshaft, it is possible the crankshaft seal surface is damaged. The seal area on the crankshaft could have minor nicks or scratches that can be polished out with emery cloth.

CAUTION: Use extreme caution when crankshaft polishing is necessary to remove minor nicks and scratches. The crankshaft seal flange is especially machined to complement the function of the rear oil seal.

LUBRICATION (Continued)

(6) For bubbles that remain steady with shaft rotation, no further inspection can be done until disassembled.

DIAGNOSIS AND TESTING - CHECKING ENGINE OIL PRESSURE

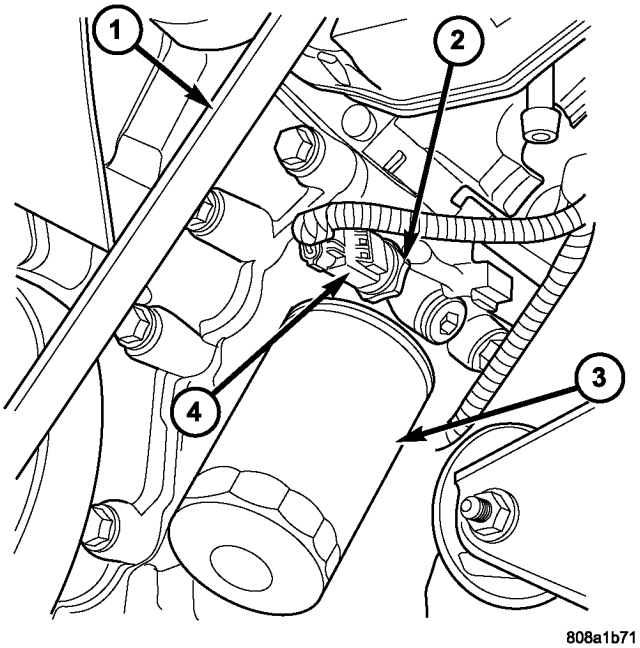

Fig. 90 OIL PRESSURE SENDING UNIT -TYPICAL

1 - BELT
2 - OIL PRESSURE SENSOR
3 - OIL FILTER
4 - ELEC. CONNECTOR

(1) Remove oil pressure sending unit (Fig. 90)(2) and install gauge assembly C-3292.

(2) Run engine until thermostat opens.

(3) Oil Pressure:

- Curb Idle - 25 kPa (4 psi) minimum
- 3000 rpm - 170 - 758 kPa (25 - 110 psi)

(4) If oil pressure is 0 at idle, shut off engine. Check for a clogged oil pick-up screen or a pressure relief valve stuck open.

DIAGNOSIS AND TESTING - REAR SEAL AREA LEAKS

Since it is sometimes difficult to determine the source of an oil leak in the rear seal area of the engine, a more involved inspection is necessary. The following steps should be followed to help pinpoint the source of the leak.

If the leakage occurs at the crankshaft rear oil seal area:

(1) Disconnect the battery.

(2) Raise the vehicle.

(3) Remove torque converter or clutch housing cover and inspect rear of block for evidence of oil. Use a black light to check for the oil leak:

(a) Circular spray pattern generally indicates seal leakage or crankshaft damage.

(b) Where leakage tends to run straight down, possible causes are a porous block, camshaft bore cup plugs, oil galley pipe plugs, oil filter runoff, and main bearing cap to cylinder block mating surfaces. See Engine, for proper repair procedures of these items.

(4) If no leaks are detected, pressurized the crankcase as outlined in the section, Inspection (Engine oil Leaks in general)

CAUTION: Do not exceed 20.6 kPa (3 psi).

(5) If the leak is not detected, very slowly turn the crankshaft and watch for leakage. If a leak is detected between the crankshaft and seal while slowly turning the crankshaft, it is possible the crankshaft seal surface is damaged. The seal area on the crankshaft could have minor nicks or scratches that can be polished out with emery cloth.

CAUTION: Use extreme caution when crankshaft polishing is necessary to remove minor nicks or scratches. The crankshaft seal flange is specially machined to complement the function of the rear oil seal.

(6) For bubbles that remain steady with shaft rotation, no further inspection can be done until disassembled. (Refer to 9 - ENGINE - DIAGNOSIS AND TESTING), under the Oil Leak row, for components inspections on possible causes and corrections.

(7) After the oil leak root cause and appropriate corrective action have been identified, (Refer to 9 - ENGINE/ENGINE BLOCK/CRANKSHAFT OIL SEAL - REAR - REMOVAL).

OIL

STANDARD PROCEDURE - ENGINE OIL SERVICE

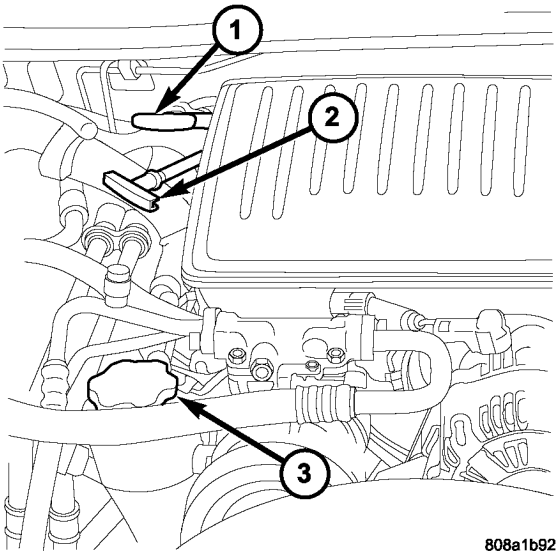

Fig. 91 ENGINE OIL DIPSTICK

1 - TRANSMISSION DIPSTICK
2 - ENGINE OIL DIPSTICK
3 - ENGINE OIL FILL CAP

The engine oil level indicator (Fig. 91)(1) is located at the right rear of the engine on the 3.7L/4.7L engines.

CRANKCASE OIL LEVEL INSPECTION

CAUTION: Do not overfill crankcase with engine oil, pressure loss or oil foaming can result.

Inspect engine oil level approximately every 800 kilometers (500 miles). Unless the engine has exhibited loss of oil pressure, run the engine for about five minutes before checking oil level. Checking engine oil level on a cold engine is not accurate.

To ensure proper lubrication of an engine, the engine oil must be maintained at an acceptable level. The acceptable levels are indicated between the ADD and SAFE marks on the engine oil dipstick.

(1) Position vehicle on level surface.

(2) With engine OFF, allow approximately ten minutes for oil to settle to bottom of crankcase, remove engine oil dipstick.

(3) Wipe dipstick clean.

(4) Install dipstick and verify it is seated in the tube.

(5) Remove dipstick, with handle held above the tip, take oil level reading.

(6) Add oil only if level is below the ADD mark on dipstick.

ENGINE OIL CHANGE

Change engine oil at mileage and time intervals described in Maintenance Schedules.

Run engine until achieving normal operating temperature.

(1) Position the vehicle on a level surface and turn engine off.

(2) Hoist and support vehicle on safety stands.

(3) Remove oil fill cap.

(4) Place a suitable drain pan under crankcase drain.

(5) Remove drain plug from crankcase and allow oil to drain into pan. Inspect drain plug threads for stretching or other damage. Replace drain plug if damaged.

(6) Install drain plug in crankcase.

(7) Lower vehicle and fill crankcase with specified type and amount of engine oil described in this section.

(8) Install oil fill cap.

(9) Start engine and inspect for leaks.

(10) Stop engine and inspect oil level.

NOTE:
Care should be exercised when disposing used engine oil after it has been drained from a vehicle engine. Refer to the WARNING at beginning of this section.

OIL FILTER

REMOVAL

All engines are equipped with a high quality full-flow, disposable type oil filter. DaimlerChrysler Corporation recommends a Mopar® or equivalent oil filter be used.

(1) Position a drain pan under the oil filter.

(2) Using a suitable oil filter wrench loosen filter.

(3) Rotate the oil filter counterclockwise (Fig. 92)to remove it from the cylinder block oil filter boss.

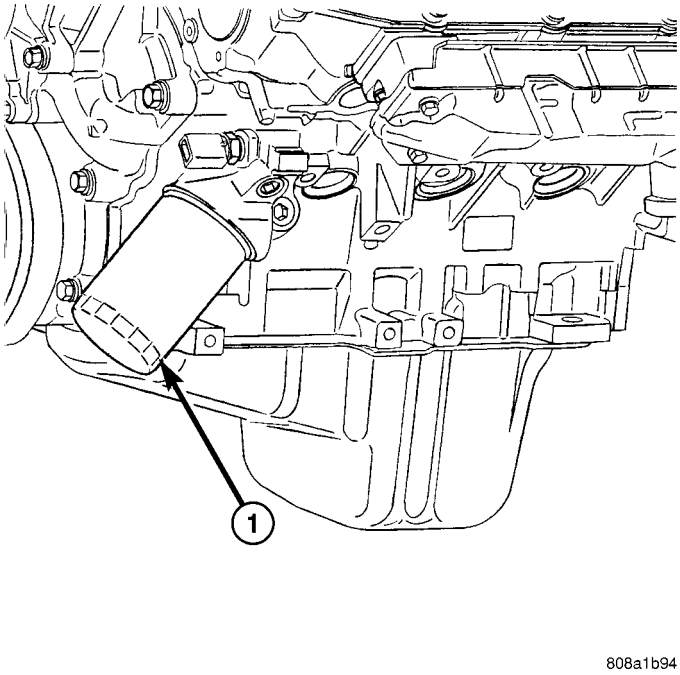

Fig. 92 Oil Filter - 3.7L Engine

1 - ENGINE OIL FILTER

(4) When filter separates from cylinder block oil filter boss, tip gasket end upward to minimize oil spill. Remove filter from vehicle.

NOTE: Make sure filter gasket was removed with filter.

(5) With a wiping cloth, clean the gasket sealing surface of oil and grime.

INSTALLATION

(1) Lightly lubricate oil filter gasket (Fig. 93)(2) with engine oil.

(2) Thread filter (3) onto adapter nipple. When gasket makes contact with sealing surface, hand tighten filter one full turn, do not over tighten.

(3) Add oil, verify crankcase oil level and start engine. Inspect for oil leaks.

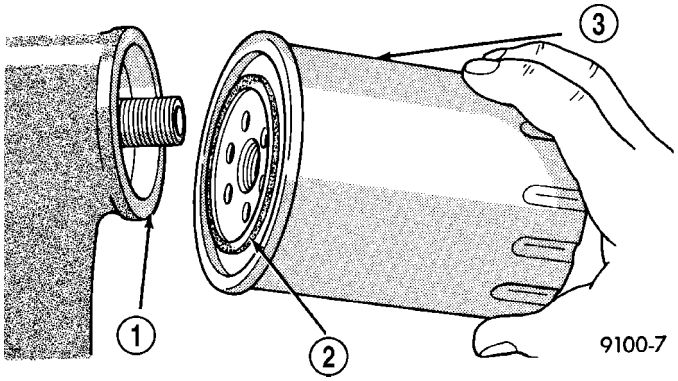

Fig. 93 Oil Filter Sealing Surface-Typical

1 - SEALING SURFACE
2 - RUBBER GASKET
3 - OIL FILTER

OIL PAN

DESCRIPTION

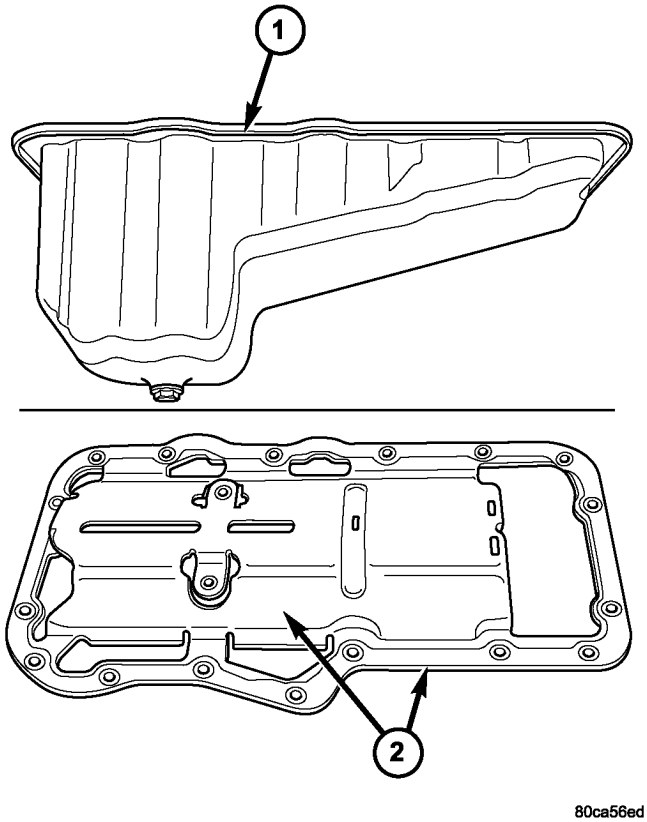

Fig. 94 Oil Pan And Gasket

1 - OIL PAN
2 - WINDAGE TRAY AND INTEGRATED OIL PAN GASKET

The engine oil pan (Fig. 94)(1)is made of laminated steel and has a single plane sealing surface. The sandwich style oil pan gasket has an integrated windage tray (2) and steel carrier. The sealing area

OIL PAN (Continued)

of the gasket is molded with rubber and is designed to be reused as long as the gasket is not cut, torn or ripped.

REMOVAL

REMOVAL

(1) Disconnect and isolate negative battery cable.
(2) Install engine support fixture.
(3) Raise and support vehicle.
(4) Remove front wheel assemblies.
(5) Remove skid plate (if equipped). (Refer to 13 - FRAME & BUMPERS/FRAME/FRONT SKID PLATE - REMOVAL)
(6) Drain engine oil.
(7) Mark adjustment cam position of front lower control arm bolts.
(8) Remove front lower control arm bolts. (Refer to 2 - SUSPENSION/FRONT/LOWER CONTROL ARM - REMOVAL)
(9) Disconnect LH tie rod. (Refer to 19 - STEERING/LINKAGE/TIE ROD END - REMOVAL)
(10) Disconnect LH lower ball joint (Refer to 2 - SUSPENSION/FRONT/LOWER BALL JOINT - REMOVAL)
(11) Disconnect LH strut clevis (Refer to 2 - SUSPENSION/FRONT/CLEVIS BRACKET - REMOVAL)
(12) Remove LH front axle (Refer to 3 - DIFFERENTIAL & DRIVELINE/HALF SHAFT - REMOVAL)
(13) Remove front axle brace bolts.
(14) Remove front prop shaft. (Refer to 3 - DIFFERENTIAL & DRIVELINE/PROPELLER SHAFT/ PROPELLER SHAFT - REMOVAL)
(15) Drain front axle.
(16) Using a transmission jack, support front axle.
(17) Remove axle bracket bolts. (Refer to 3 - DIFFERENTIAL & DRIVELINE/FRONT AXLE - REMOVAL)
(18) With RH axle still in place, remove front differential.
(19) Remove transmission oil cooler line bracket.
(20) Remove engine to transmission stiffening bracket.
(21) Position Special Tool 8534 on fender lip and align the slots in the brackets with the fender mounting holes.
(22) Secure brackets to the fender using four M6 X 1.0 X 25 MM flanged cap screws.
(23) Tighten the thumbscrews to secure the sleeves to the support tube.
(24) Secure the support tube in an upright position.
(25) Assemble the flat washer, thrust bearing, hook and T handle.
(26) Using the M10 X 1.75 mm flanged nut supplied with the support fixture, secure the chain to the front engine lifting stud.
(27) Loosen engine mounts.
(28) Remove oil pan bolts.
(29) Seperate oil pan from engine.
(30) Move oil pan to one side, remove oils sump bolt and windage tray bolts,

NOTE: Do not pry on oil pan or oil pan gasket. Gasket is integral to engine windage tray and does not come out with oil pan (Fig. 95).

(31) Move the oil pan and windage tray toward front of vehicle and remove from vehicle.

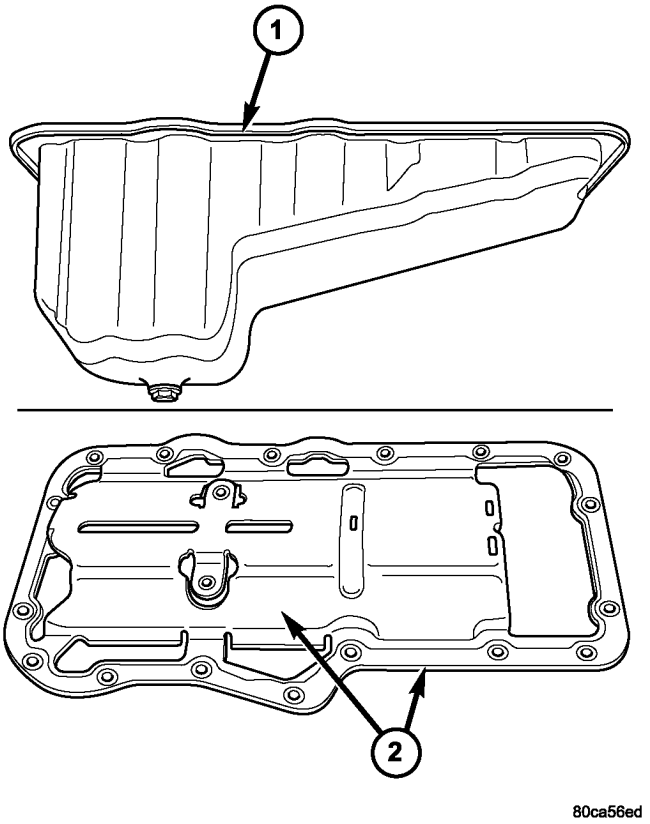

Fig. 95 Oil Pan And Gasket

1 - OIL PAN
2 - WINDAGE TRAY AND INTEGRATED OIL PAN GASKET

REMOVAL - 4x4

(1) Disconnect Battery.
(2) Install Engine Support Fixture, special Tool 8534.
(3) Raise and support vehicle.
(4) Remove front wheel and tire assemblies.
(5) Remove skid plate (if equipped).
(6) Drain engine oil.

OIL PAN (Continued)

(7) Remove engine to transmission structural cover, (if equipped).
(8) Remove transmission oil cooler line bracket.
(9) Remove the front axle assembly from the vehicle (Refer to 3 - DIFFERENTIAL & DRIVELINE/ FRONT AXLE - REMOVAL).
(10) Loosen both engine mount through bolts.
(11) Lower the vehicle.

NOTE: It is not necessary to remove the viscous fan , or fan shroud, for oil pan removal.

(12) Raise the engine using Engine Support Fixture, special Tool 8534, until the viscous fan almost touches the fan shroud.
(13) Raise the vehicle.
(14) Remove the oil pan bolts.
(15) Separate the oil pan from the engine.
(16) Remove the (2) nuts and (1) bolt holding the oil pump pick-up tube, and windage tray in place.

NOTE: It will be necessary to move the oil pan from side to side to gain access to these fasteners.

(17) Drop the oil pump pick-up tube into the oil pan, and remove the oil pan, pick-up tube, and the windage tray, as an assembly, from the front of the vehicle.

CLEANING

(1) Clean oil pan in solvent and wipe dry with a clean cloth.
(2) Clean the oil pan gasket surface. **DO NOT** use a grinder wheel or other abrasive tool to clean sealing surface.
(3) Clean oil screen and tube thoroughly in clean solvent.

INSPECTION

(1) Inspect oil drain plug and plug hole for stripped or damaged threads. Repair as necessary.
(2) Inspect the oil pan mounting flange for bends or distortion. Straighten flange, if necessary.

INSTALLATION

INSTALLATION

(1) Clean the oil pan gasket mating surface of the bedplate and oil pan.
(2) Clean the oil pan and block gasket mating surfaces.
(3) Inspect integrated oil pan gasket, and replace as necessary.
(4) Drop the oil pump pick-up tube into the oil pan, and install the oil pan, pick-up tube, and the windage tray, as an assembly, from the front of the vehicle.
(5) Install the windage tray, then the oil pump pick-up tube, and the (2) nuts and (1) bolt holding the oil pump pick-up tube, in place.

NOTE: It will be necessary to move the oil pan from side to side to gain access to these fasteners.

(6) Torque the pick-up tube fasteners.
(1) Install the oil pan.
(2) Install and torque the oil pan bolts. (Fig. 96).
(3) Install the engine to transmission structural cover, (if equipped).
(4) Lower engine, and remove Special Tool 8534.
(5) Lower the vehicle.
(6) Lower the engine using Engine Support Fixture, special Tool # 8534.
(7) Remove the Engine Support Fixture, special Tool # 8534.
(8) Raise the vehicle.
(9) Tighten both engine mount through bolts.
(10) Install the transmission oil cooler line bracket.
(11) Lower the vehicle.
(12) Refill engine oil.
(13) Reconnect battery.
(14) Start engine and check for leaks.

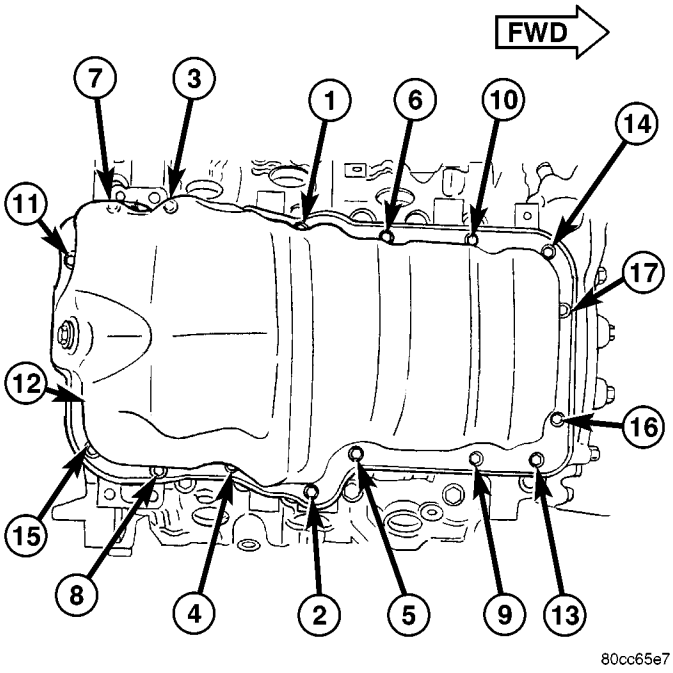

Fig. 96 Oil Pan Mounting Bolt Sequence

INSTALLATION - 4x4

(1) Inspect oil pan gasket for defects, and replace if necessary.
(2) Clean the oil pan and block gasket mating surfaces.

OIL PAN (Continued)

(3) Drop the oil pump pick-up tube into the oil pan, and install the oil pan, pick-up tube, and the windage tray, as an assembly, from the front of the vehicle.

(4) Install the windage tray, then the oil pump pick-up tube, and the (2) nuts and (1) bolt holding the oil pump pick-up tube, in place.

NOTE: It will be necessary to move the oil pan from side to side to gain access to these fasteners.

(5) Torque the pick-up tube fasteners.
(6) Install the oil pan.
(7) Install and torque the oil pan bolts.
(8) Install the engine to transmission structural cover, (if equipped).
(9) Lower the vehicle.
(10) Lower the engine using Engine Support Fixture, special Tool # 8534.
(11) Remove the Engine Support Fixture, special Tool # 8534.
(12) Raise the vehicle.
(13) Tighten both engine mount through bolts.
(14) Install the transmission oil cooler line bracket.
(15) Install the front axle assembly to the vehicle (Refer to 3 - DIFFERENTIAL & DRIVELINE/ FRONT AXLE - INSTALLATION).
(16) Install the skid plate (if equipped).
(17) Install the front wheel and tire assemblies.
(18) Lower the vehicle.
(19) Refill engine oil.
(20) Reconnect battery.
(21) Start engine, and check for leaks.

SWITCH - OIL PRESSURE

DESCRIPTION

The 1 wire, solid-state engine oil pressure sensor (sending unit) is located in an engine oil pressure gallery.

OPERATION

The oil pressure sensor uses three circuits. They are:

- A 5 volt power supply from the Powertrain Control Module (PCM)
- A sensor ground through the PCM's sensor return
- A signal to the PCM relating to engine oil pressure

The oil pressure sensor has a 3 wire electrical function very much like the Manifold Absolute Pressure (MAP) sensor. Meaning different pressures relate to different output voltages.

A 5 volt supply is sent to the sensor from the PCM to power up the sensor. The sensor returns a voltage signal back to the PCM relating to engine oil pressure. This signal is then transferred (bussed) to the instrument panel on either a CCD or PCI bus circuit (depending on vehicle line) to operate the oil pressure gauge and the check gauges lamp. Ground for the sensor is provided by the PCM through a low-noise sensor return.

REMOVAL

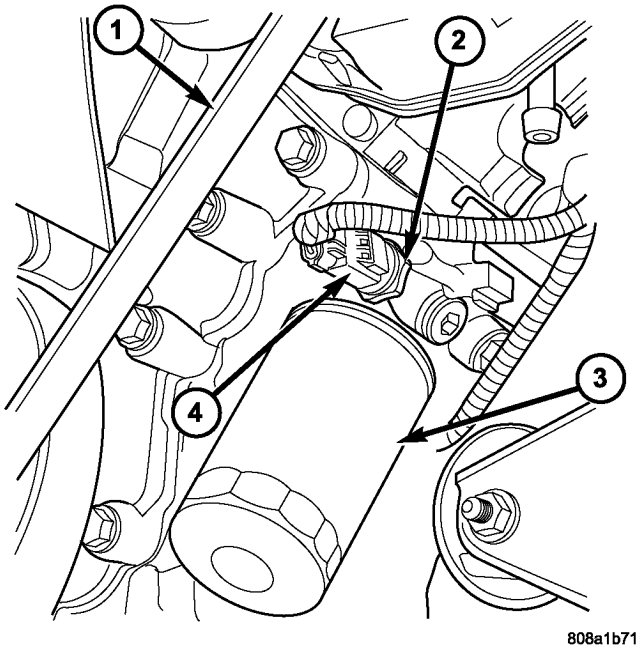

Fig. 97 OIL PRESSURE SENDING UNIT

1 - BELT
2 - OIL PRESSURE SENSOR
3 - OIL FILTER
4 - ELEC. CONNECTOR

(1) Disconnect the negative cable from the battery.
(2) Raise vehicle on hoist.
(3) Remove front splash shield.
(4) Disconnect oil pressure sender wire (4).
(5) Remove the pressure sender (Fig. 97)(2).

INSTALLATION

(1) Install oil pressure sender.
(2) Connect oil pressure sender wire.
(3) Install front splash shield.
(4) Lower vehicle.
(5) Connect the negative battery cable.

PUMP - ENGINE OIL

REMOVAL

(1) Remove the oil pan and pick-up tube (Refer to 9 - ENGINE/LUBRICATION/OIL PAN - REMOVAL).

(2) Remove the timing chain cover (Refer to 9 - ENGINE/VALVE TIMING/TIMING BELT / CHAIN COVER(S) - REMOVAL).

(3) Remove the timing chains and tensioners (Refer to 9 - ENGINE/VALVE TIMING/TIMING BELT/CHAIN AND SPROCKETS - REMOVAL).

(4) Remove the four bolts, primary timing chain tensioner and the oil pump.

DISASSEMBLY

(1) Remove oil pump cover screws and lift off cover plate.

(2) Remove pump inner and outer rotors.

NOTE: Once the oil pressure relief valve, cup plug, and pin are removed, the pump assembly must be replaced.

(3) If it is necessary to remove the pressure relief valve, drive the roll pin from pump housing and remove cup plug, spring and valve.

INSPECTION

CAUTION: Oil pump pressure relief valve and spring should not be removed from the oil pump. If these components are disassembled and or removed from the pump the entire oil pump assembly must be replaced.

(1) Clean all parts thoroughly. Mating surface of the oil pump housing should be smooth. If the pump cover is scratched or grooved the oil pump assembly should be replaced.

(2) Lay a straight edge across the pump cover surface (Fig. 98). If a 0.025 mm (0.001 in.) feeler gauge can be inserted between the cover and the straight edge the oil pump assembly should be replaced.

(3) Measure the thickness of the outer rotor (Fig. 99). If the outer rotor thickness measures at 12.005 mm (0.472 in.) or less the oil pump assembly must be replaced.

(4) Measure the diameter of the outer rotor. If the outer rotor diameter measures at 85.925 mm (3.382 in.) or less the oil pump assembly must be replaced.

(5) Measure the thickness of the inner rotor (Fig. 100). If the inner rotor thickness measures at 12.005 mm (0.472 in.) or less then the oil pump assembly must be replaced.

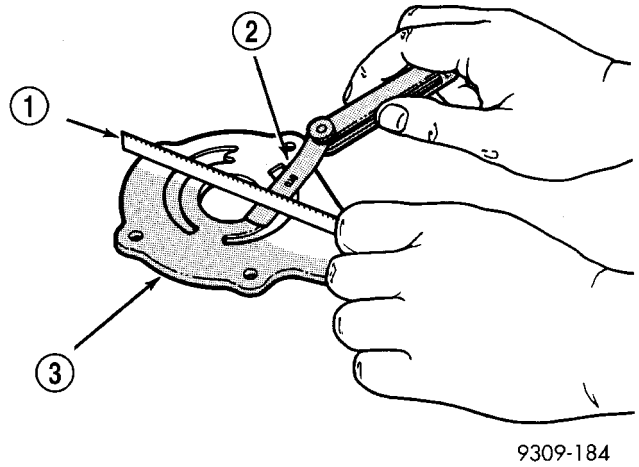

Fig. 98 Checking Oil Pump Cover Flatness

1 - STRAIGHT EDGE
2 - FEELER GAUGE
3 - OIL PUMP COVER

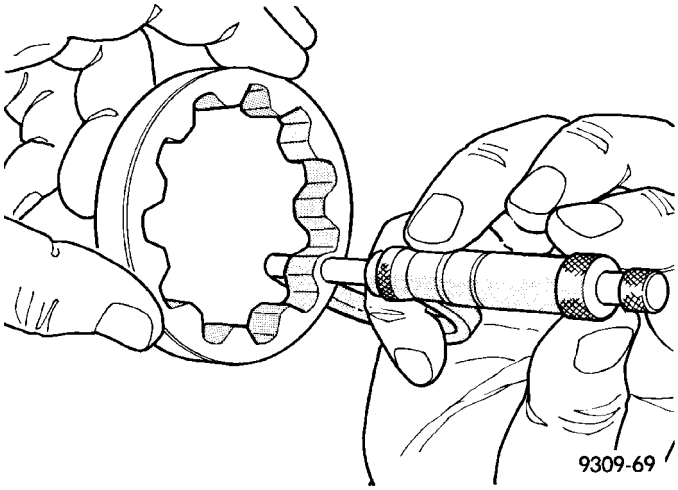

Fig. 99 Measuring Outer Rotor Thickness

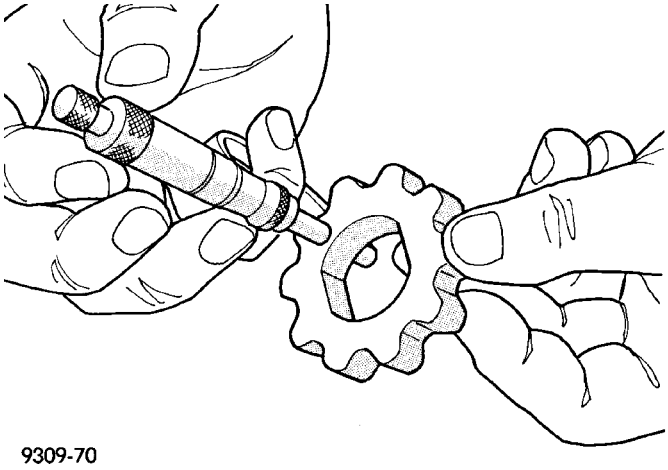

Fig. 100 Measuring Inner Rotor Thickness

PUMP - ENGINE OIL (Continued)

(6) Slide outer rotor into the body of the oil pump. Press the outer rotor to one side of the oil pump body and measure clearance between the outer rotor and the body (Fig. 101). If the measurement is 0.235mm (0.009 in.) or more the oil pump assembly must be replaced.

(7) Install the inner rotor in the into the oil pump body. Measure the clearance between the inner and outer rotors (Fig. 102). If the clearance between the rotors is .150 mm (0.006 in.) or more the oil pump assembly must be replaced.

(8) Place a straight edge across the body of the oil pump (between the bolt holes), if a feeler gauge of .095 mm (0.0038 in.) or greater can be inserted between the straightedge and the rotors, the pump must be replaced (Fig. 103).

NOTE: The 3.7L Oil pump is released as an assembly. There are no DaimlerChrysler part numbers for Sub-Assembly components. In the event the oil pump is not functioning or out of specification it must be replaced as an assembly.

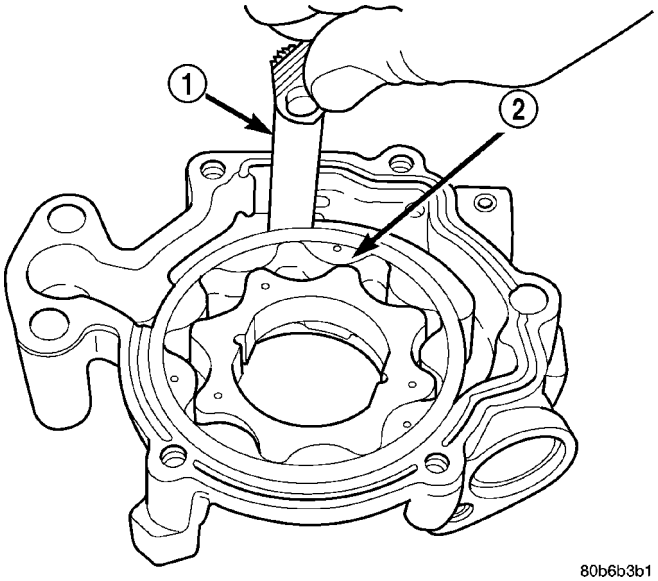

Fig. 101 Measuring Outer Rotor Clearance

1 - FEELER GAUGE
2 - OUTER ROTOR

ASSEMBLY

(1) Wash all parts in a suitable solvent and inspect carefully for damage or wear.

(2) Install inner and outer rotors

(3) Install oil pump cover plate and install cover bolts and tighten them to 12 N·m (105 in. lbs.).

(4) Prime oil pump before installation by filling rotor cavity with engine oil.

(5) If oil pressure is low and pump is within specifications, inspect for worn engine bearings or other causes for oil pressure loss.

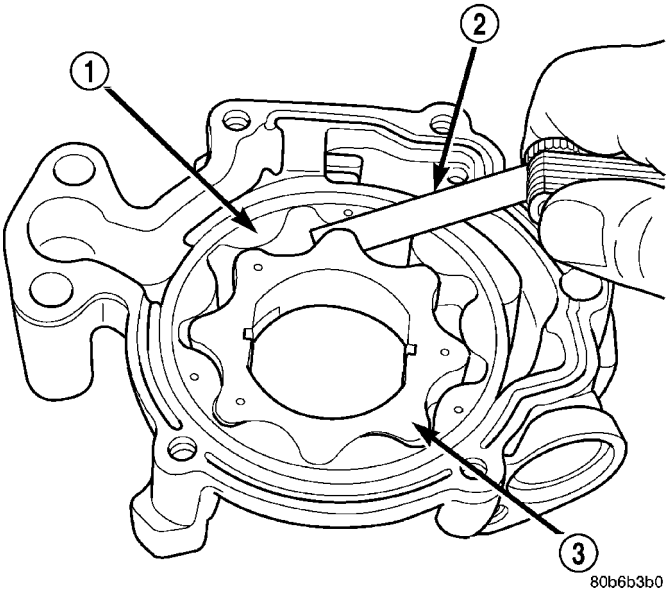

Fig. 102 Measuring Clearance Between Rotors

1 - OUTER ROTOR
2 - FEELER GAUGE
3 - INNER ROTOR

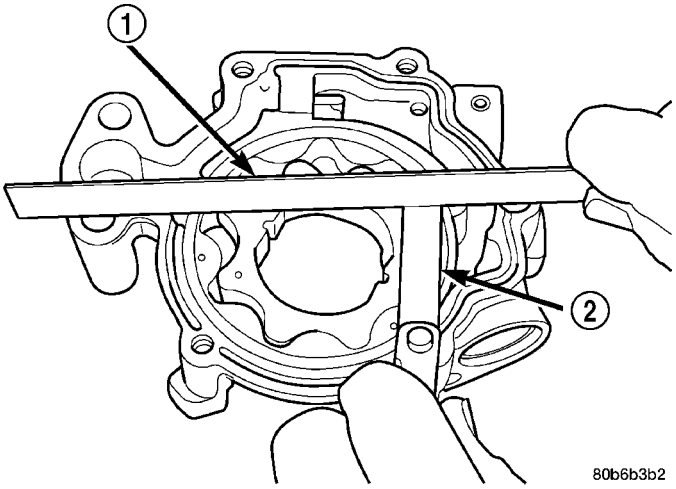

Fig. 103 Measuring Clearance Over Rotors

1 - STRAIGHT EDGE
2 - FEELER GAUGE

INSTALLATION

(1) Position the oil pump onto the crankshaft and install two oil pump retaining bolts.

(2) Position the primary timing chain tensioner and install the two retaining bolts.

(3) Tighten the oil pump and primary timing chain tensioner retaining bolts to 28 N·m (250 in. lbs.) in the sequence shown (Fig. 104).

(4) Install the secondary timing chain tensioners and timing chains (Refer to 9 - ENGINE/VALVE TIMING/TIMING BELT/CHAIN AND SPROCKETS - INSTALLATION).

PUMP - ENGINE OIL (Continued)

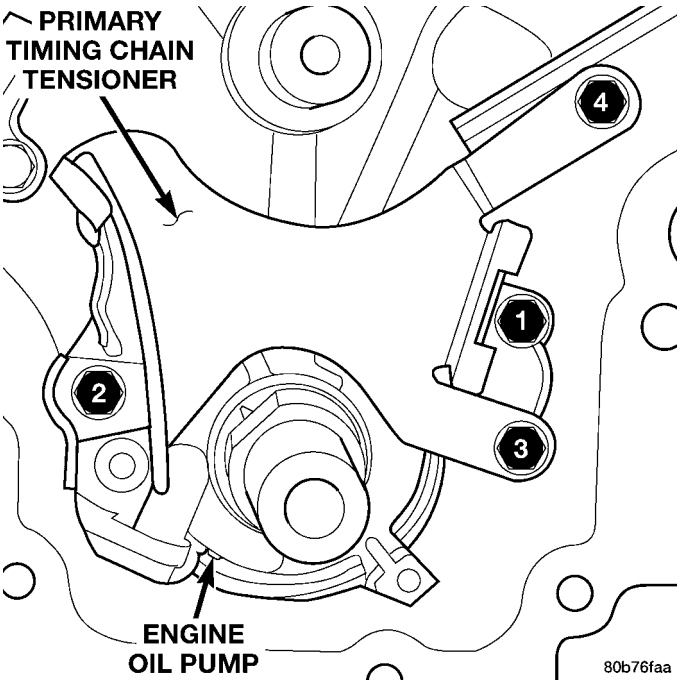

Fig. 104 Oil Pump And Primary Timing Chain Tensioner Tightening Sequence

(5) Install the timing chain cover (Refer to 9 - ENGINE/VALVE TIMING/TIMING BELT / CHAIN COVER(S) - INSTALLATION).

(6) Install the pick-up tube and oil pan (Refer to 9 - ENGINE/LUBRICATION/OIL PAN - INSTALLATION).

MANIFOLD - INTAKE

DESCRIPTION

The intake manifold (Fig. 105)(2) is made of a composite material and features 300 mm (11.811 in.) long runners which maximizes low end torque. The intake manifold uses single plane sealing which consist of six individual press in place port gaskets to prevent leaks. The throttle body attaches directly to the intake manifold. Eight studs and two bolts are used to fasten the intake to the head.

DIAGNOSIS AND TESTING - INTAKE MANIFOLD LEAKS

An intake manifold air leak is characterized by lower than normal manifold vacuum. Also, one or more cylinders may not be functioning.

WARNING: USE EXTREME CAUTION WHEN THE ENGINE IS OPERATING. DO NOT STAND IN A DIRECT LINE WITH THE FAN. DO NOT PUT YOUR HANDS NEAR THE PULLEYS, BELTS OR THE FAN. DO NOT WEAR LOOSE CLOTHING.

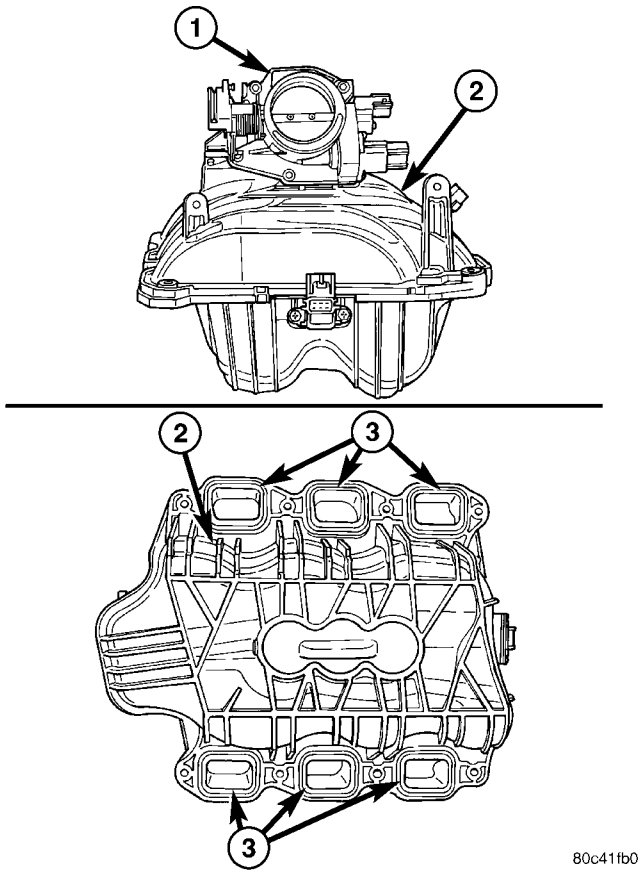

Fig. 105 Intake Manifold

1 - THROTTLE BODY
2 - INTAKE MANIFOLD
3 - INTAKE PORT GASKETS

(1) Start the engine.

(2) Spray a small stream of water (spray bottle) at the suspected leak area.

(3) If engine RPM'S change, the area of the suspected leak has been found.

(4) Repair as required.

REMOVAL

(1) Disconnect negative cable from battery.

(2) Remove resonator assembly and air inlet hose.

(3) Disconnect throttle and speed control cables.

(4) Disconnect electrical connectors for the following components: Refer to FUEL SYSTEM for component locations.

- Manifold Absolute Pressure (MAP) Sensor
- Intake Air Temperature (IAT) Sensor
- Throttle Position (TPS) Sensor
- Coolant Temperature (CTS) Sensor
- Idle Air Control (IAC) Motor

(5) Disconnect vapor purge hose, brake booster hose, speed control servo hose, positive crankcase ventilation (PCV) hose.

(6) Disconnect generator electrical connections.

MANIFOLD - INTAKE (Continued)

(7) Disconnect air conditioning compressor electrical connections.

(8) Disconnect left and right radio suppressor straps.

(9) Disconnect and remove ignition coil towers.

(10) Remove top oil dipstick tube retaining bolt and ground strap.

(11) Bleed fuel system (Refer to 14 - FUEL SYSTEM/FUEL DELIVERY - STANDARD PROCEDURE).

(12) Remove fuel rail.

(13) Remove throttle body assembly and mounting bracket.

(14) Drain cooling system below coolant temperature level (Refer to 7 - COOLING - STANDARD PROCEDURE).

(15) Remove the heater hoses from the engine front cover and the heater core.

(16) Unclip and remove heater hoses and tubes from intake manifold.

(17) Remove coolant temperature sensor (Refer to 7 - COOLING/ENGINE/ENGINE COOLANT TEMP SENSOR - REMOVAL).

(18) Remove intake manifold retaining fasteners in reverse order of tightening sequence.

(19) Remove intake manifold.

INSTALLATION

(1) Install intake manifold gaskets.

(2) Install intake manifold.

(3) Install intake manifold retaining bolts and tighten in sequence shown (Fig. 106)in to 12 N·m (105 in. lbs.).

(4) Install left and right radio suppressor straps.

(5) Install throttle body assembly.

(6) Connect throttle cable and speed control cable to throttle body.

(7) Install fuel rail.

(8) Install ignition coil towers.

(9) Position and install heater hoses and tubes onto intake manifold.

(10) Install the heater hoses to the heater core and engine front cover.

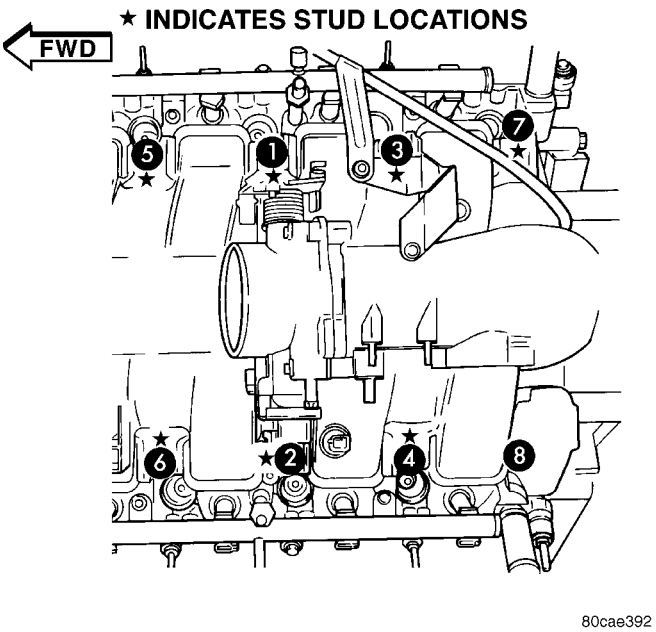

Fig. 106 Intake Manifold Tightening Sequence

(11) Connect electrical connectors for the following components:

- Manifold Absolute Pressure (MAP) Sensor
- Intake Air Temperature (IAT) Sensor
- Throttle Position (TPS) Sensor
- Coolant Temperature (CTS) Sensor
- Idle Air Control (IAC) Motor
- Ignition coil towers
- Fuel injectors

(12) Install top oil dipstick tube retaining bolt and ground strap.

(13) Connect generator electrical connections.

(14) Connect Vapor purge hose, Brake booster hose, Speed control servo hose, Positive crankcase ventilation (PCV) hose.

(15) Fill cooling system (Refer to 7 - COOLING - STANDARD PROCEDURE).

(16) Install resonator assembly and air inlet hose.

(17) Connect negative cable to battery.

MANIFOLD - EXHAUST

DESCRIPTION

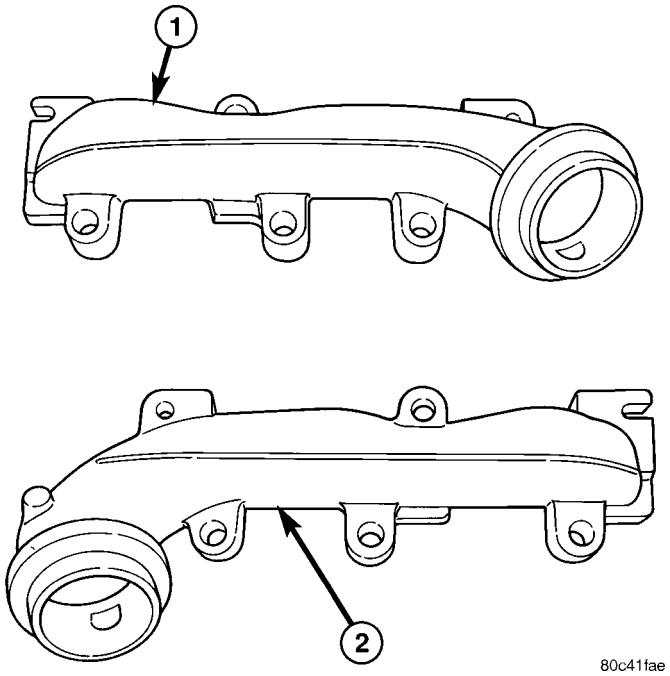

Fig. 107 EXHAUST MANIFOLDS

1 - LEFT SIDE EXHAUST MANIFOLD
2 - RIGHT SIDE EXHAUST MANIFOLD

The exhaust manifolds (Fig. 108)(1,2) are log style with a patented flow enhancing design to maximize performance. The exhaust manifolds are made of high silicon molybdenum cast iron. A perforated core graphite exhaust manifold gasket is used to improve sealing to the cylinder head. The exhaust manifolds are covered by a three layer laminated heat shield (3) for thermal protection and noise reduction. The heat shields are fastened with a torque prevailing nut that is backed off slightly to allow for the thermal expansion of the exhaust manifold.

REMOVAL

RIGHT EXHAUST MANIFOLD

(1) Disconnect the negative cable from the battery.
(2) Raise and support the vehicle.
(3) Remove the bolts and nuts attaching the exhaust pipe to the engine exhaust manifold.
(4) Lower the vehicle.
(5) Remove the exhaust heat shield (1).
(6) Remove bolts, nuts and washers attaching manifold to cylinder head.
(7) Remove manifold (Fig. 109)and gasket from the cylinder head.

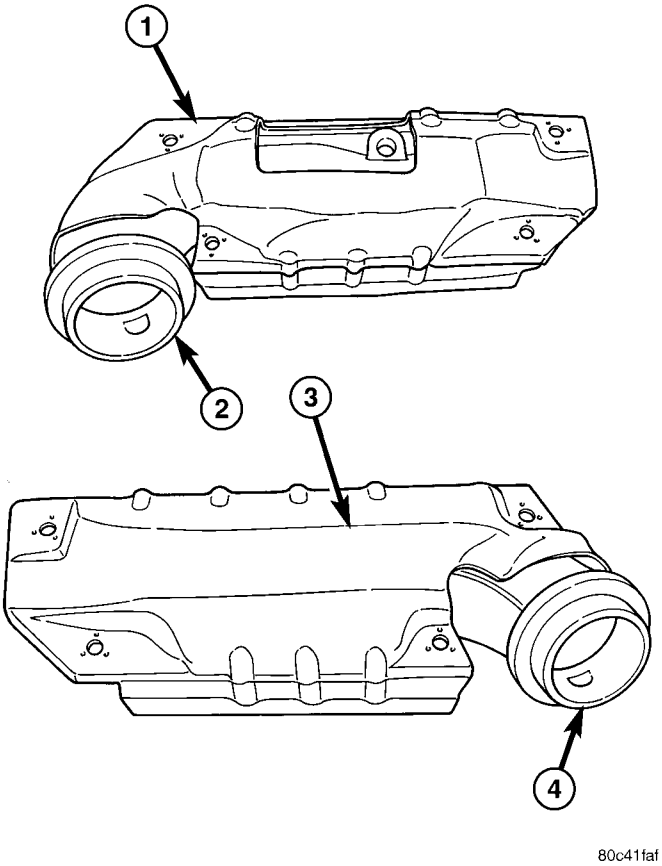

Fig. 108 Exhaust Manifold Heat Shields

1 - RIGHT SIDE EXHAUST MANIFOLD HEAT SHIELD
2 - RIGHT SIDE EXHAUST MANIFOLD FLANGE
3 - LEFT SIDE EXHAUST MANIFOLD HEAT SHIELD
4 - LEFT SIDE EXHAUST MANIFOLD FLANGE

LEFT EXHAUST MANIFOLD

(1) Disconnect the negative cable from the battery.
(2) Raise and support the vehicle.
(3) Remove the bolts and nuts attaching the exhaust pipe to the engine exhaust manifold.
(4) Lower the vehicle.
(5) Remove the exhaust heat shields (1).
(6) Remove bolts, nuts and washers attaching manifold to cylinder head.
(7) Remove manifold (Fig. 110)and gasket from the cylinder head.

INSTALLATION

RIGHT EXHAUST MANIFOLD

CAUTION: If the studs came out with the nuts when removing the engine exhaust manifold, install new studs. Apply sealer on the coarse thread ends. Water leaks may develop at the studs if this precaution is not taken.

MANIFOLD - EXHAUST (Continued)

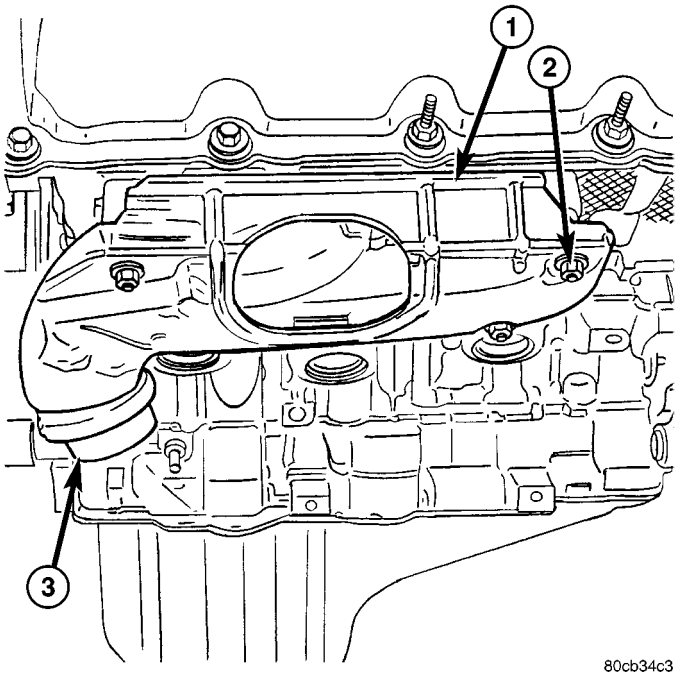

Fig. 109 Exhaust Manifold Right

1 - HEAT SHIELD
2 - NUTS
3 - MANIFOLD FLANGE

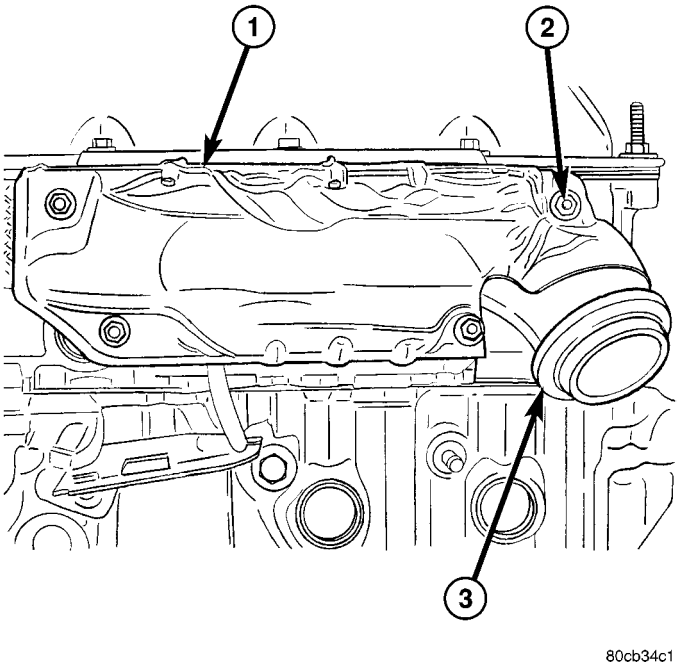

Fig. 110 Exhaust Manifold left

1 - HEAT SHIELD
2 - NUTS
3 - MANIFOLD FLANGE

(1) Position the engine exhaust manifold and gasket on the two studs located on the cylinder head. Install conical washers and nuts on these studs .

(2) Install remaining conical washers. Starting at the center arm and working outward, tighten the bolts and nuts to 25 N·m (18 ft. lbs.) torque.

(3) Install the exhaust heat shields.

(4) Raise and support the vehicle.

CAUTION: Over tightening heat shield fasteners, may cause shield to distort and/or crack.

(5) Assemble exhaust pipe to manifold and secure with bolts, nuts and retainers. Tighten the bolts and nuts to 34 N·m (25 ft. lbs.) torque.

LEFT EXHAUST MANIFOLD

CAUTION: If the studs came out with the nuts when removing the engine exhaust manifold, install new studs. Apply sealer on the coarse thread ends. Water leaks may develop at the studs if this precaution is not taken.

(1) Position the engine exhaust manifold and gasket on the two studs located on the cylinder head. Install conical washers and nuts on these studs .

(2) Install remaining conical washers. Starting at the center arm and working outward, tighten the bolts and nuts to 25 N·m (18 ft. lbs.) torque.

(3) Install the exhaust heat shields.

(4) Raise and support the vehicle.

CAUTION: Over tightening heat shield fasteners, may cause shield to distort and/or crack.

(5) Assemble exhaust pipe to manifold and secure with bolts, nuts and retainers. Tighten the bolts and nuts to 34 N·m (25 ft. lbs.) torque.

VALVE TIMING

DESCRIPTION

The timing drive system (Fig. 111)has been designed to provide quiet performance and reliability to support a **non-free wheeling** engine. Specifically the intake valves are non-free wheeling and can be easily damaged with forceful engine rotation if camshaft-to-crankshaft timing is incorrect. The timing drive system consists of a primary chain (6), two secondary timing chain drives (1,4) and a counterbalance shaft drive.

OPERATION

The primary timing chain is a single inverted tooth chain type. The primary chain drives the large 50 tooth idler sprocket directly from a 25 tooth crankshaft sprocket. Primary chain motion is controlled by a pivoting leaf spring tensioner arm and a fixed

VALVE TIMING (Continued)

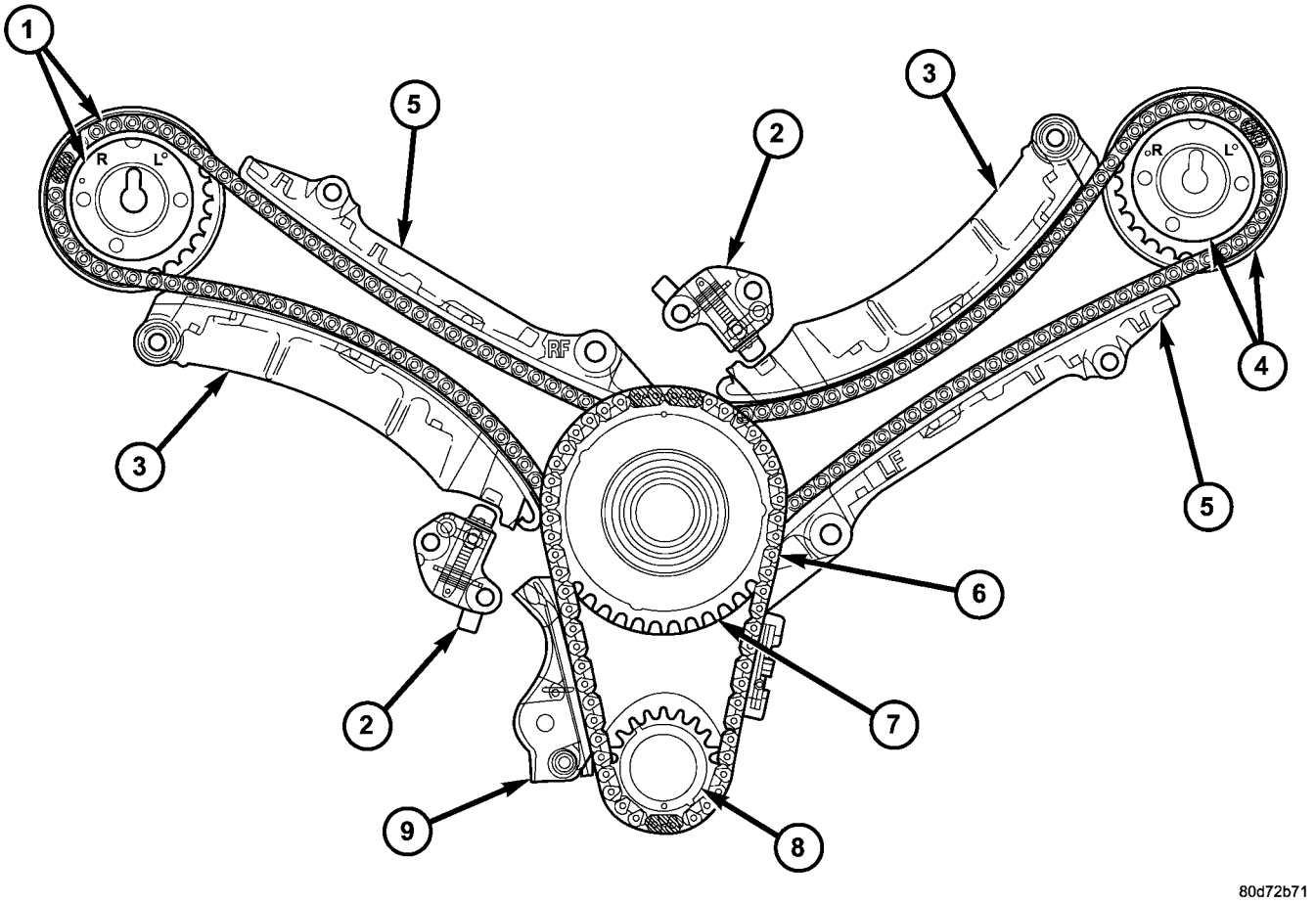

Fig. 111 Timing Drive System

1 - RIGHT CAMSHAFT SPROCKET AND SECONDARY CHAIN
2 - SECONDARY TIMING CHAIN TENSIONER (LEFT AND RIGHT SIDE NOT INTERCHANGEABLE)
3 - SECONDARY TENSIONER ARM
4 - LEFT CAMSHAFT SPROCKET AND SECONDARY CHAIN
5 - CHAIN GUIDE (LEFT AND RIGHT SIDE ARE NOT INTERCHANGEABLE)
6 - PRIMARY CHAIN
7 - IDLER SPROCKET
8 - CRANKSHAFT SPROCKET
9 - PRIMARY CHAIN TENSIONER

guide. The arm and the guide both use nylon plastic wear faces for low friction and long wear. The primary chain receives oil splash lubrication from the secondary chain drive and designed oil pump leakage. The idler sprocket assembly connects the primary chain drive, secondary chain drives, and the counterbalance shaft. The idler sprocket assembly consists of two integral 26 tooth sprockets a 50 tooth sprocket and a helical gear that is press-fit to the assembly. The spline joint for the 50 tooth sprocket is a non serviceable press fit anti rattle type. A spiral ring is installed on the outboard side of the 50 tooth sprocket to prevent spline disengagement. The idler sprocket assembly spins on a stationary idler shaft. The idler shaft is a light press-fit into the cylinder block. A large washer on the idler shaft bolt and the rear flange of the idler shaft are used to control sprocket thrust movement. Pressurized oil is routed through the center of the idler shaft to provide lubrication for the two bushings used in the idler sprocket assembly.

There are two secondary drive chains, both are roller type, one to drive the camshaft in each SOHC cylinder head. There are no shaft speed changes in the secondary chain drive system. Each secondary chain drives a 26 tooth cam sprocket directly from the 26 tooth sprocket on the idler sprocket assembly. A fixed chain guide and a hydraulic oil damped tensioner are used to maintain tension in each secondary chain system. The hydraulic tensioners for the secondary chain systems are fed pressurized oil from oil reservoir pockets in the block. Each tensioner incorporates a controlled leak path through a device known as a vent disc located in the nose of the piston

VALVE TIMING (Continued)

to manage chain loads. Each tensioner also has a mechanical ratchet system that limits chain slack if the tensioner piston bleeds down after engine shut down. The tensioner arms and guides also utilize nylon wear faces for low friction and long wear. The secondary timing chains receive lubrication from a small orifice in the tensioners. This orifice is protected from clogging by a fine mesh screen which is located on the back of the hydraulic tensioners.

STANDARD PROCEDURE

MEASURING TIMING CHAIN WEAR

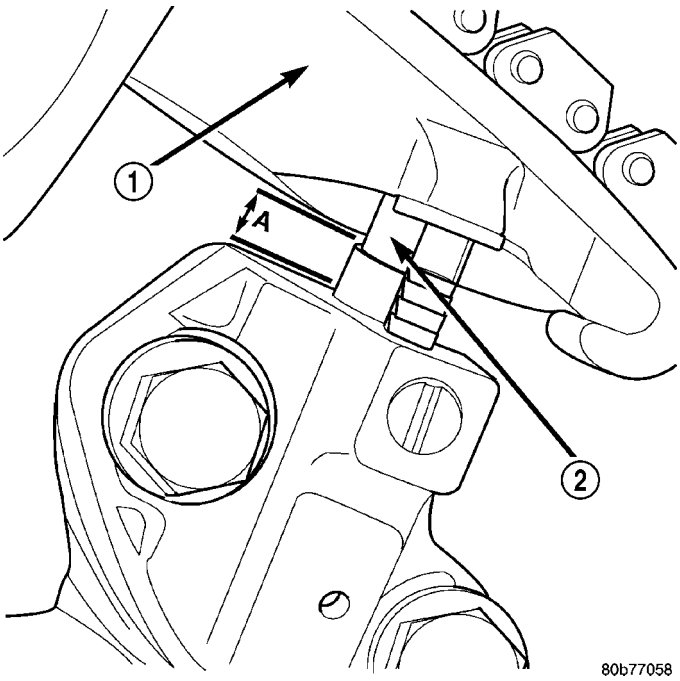

Fig. 112 Measuring Secondary Timing Chains For Wear

1 - SECONDARY TENSIONER ARM
2 - SECONDARY CHAIN TENSIONER PISTON

NOTE: This procedure must be performed with the timing chain cover removed.

(1) Remove the timing chain cover (Refer to 9 - ENGINE/VALVE TIMING/TIMING BELT/CHAIN AND SPROCKETS - REMOVAL).

(2) To determine if the secondary timing chains are worn, rotate the engine clockwise until maximum tensioner piston (2) extension is obtained. Measure the distance between the secondary timing chain tensioner housing (Fig. 112) and the step ledge on the piston. The measurement at point (A) must be less than 15mm (.5906 inches).

(3) If the measurement exceeds the specification the secondary timing chains are worn and require replacement (Refer to 9 - ENGINE/VALVE TIMING/TIMING BELT/CHAIN AND SPROCKETS - REMOVAL).

SERVICE PROCEDURE - TIMING VERIFICATION

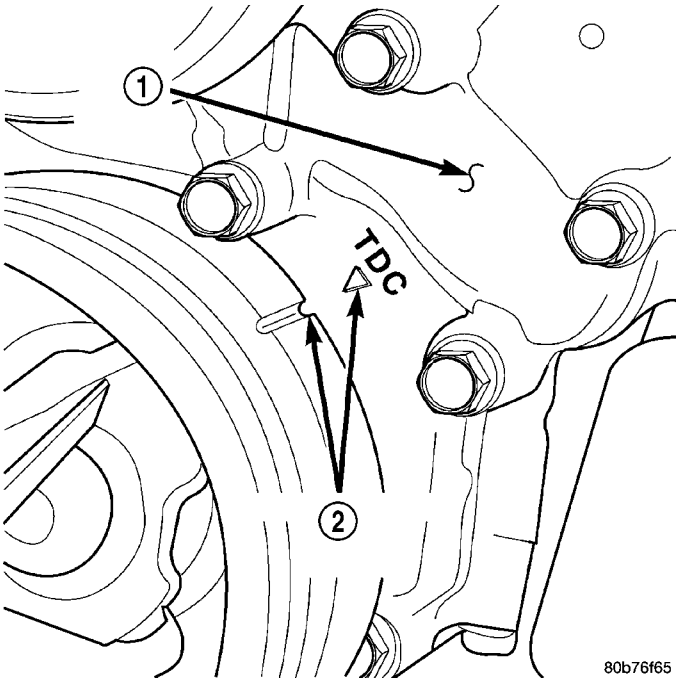

Fig. 113 Engine Top Dead Center (TDC) Indicator Mark

1 - TIMING CHAIN COVER
2 - CRANKSHAFT TIMING MARKS

CAUTION: The 3.7L is a non free-wheeling design engine. Therefore, correct engine timing is critical.

NOTE: Components referred to as left hand or right hand are as viewed from the drivers position inside the vehicle.

NOTE: The blue link plates on the chains and the dots on the camshaft drive sprockets may not line up during the timing verification procedure. The blue link plates are lined up with the sprocket dots only when re-timing the complete timing drive. Once the timing drive is rotated blue link-to-dot alignment is no longer valid.

Engine base timing can be verified by the following procedure:

(1) Remove the cylinder head covers. Refer to the procedure in this section.

VALVE TIMING (Continued)

(2) Using a mirror, locate the TDC arrow on the front cover. Rotate the crankshaft until the mark on the crankshaft damper (2) is aligned with the TDC arrow on the front cover (Fig. 113) (2). The engine is now at TDC.

(3) Note the location of the V6 mark stamped into the camshaft drive gears (Fig. 114) (1,2). If the V6 mark on each camshaft drive gear is at the twelve o'clock position, the engine is at TDC on the exhaust stroke. If the V6 mark on each gear is at the six o'clock position, the engine is at TDC on the compression stroke.

(4) If both of the camshaft drive gears are off in the same or opposite directions, the primary chain or both secondary chains are at fault. Refer to Timing Chain and Sprockets procedure in this section.

(5) If only one of the camshaft drive gears is off and the other is correct, the problem is confined to one secondary chain. Refer to Single camshaft timing, in this procedure.

(6) If both camshaft drive gear V6 marks are at the twelve o'clock or the six o'clock position the engine base timing is correct. Reinstall the cylinder head covers.

COUNTER BALANCE SHAFT TIMING

(1) Ensure that the engine is at TDC with both camshaft sprocket V6 marks in the 12 o'clock position.

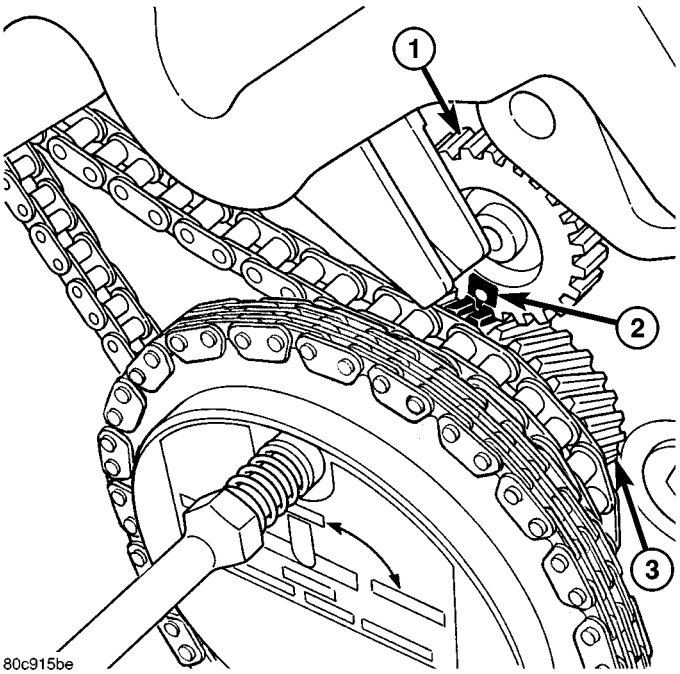

Fig. 115 COUNTERBALANCE SHAFT ALIGNMENT MARKS

1 - COUNTERBALANCE SHAFT GEAR
2 - TIMING MARK
3 - IDLER SPROCKET GEAR

(2) Look down the left cylinder head chain cavity. The timing dot (2) on the counter balance shaft drive gear should be in the 6 o'clock position (Fig. 115).

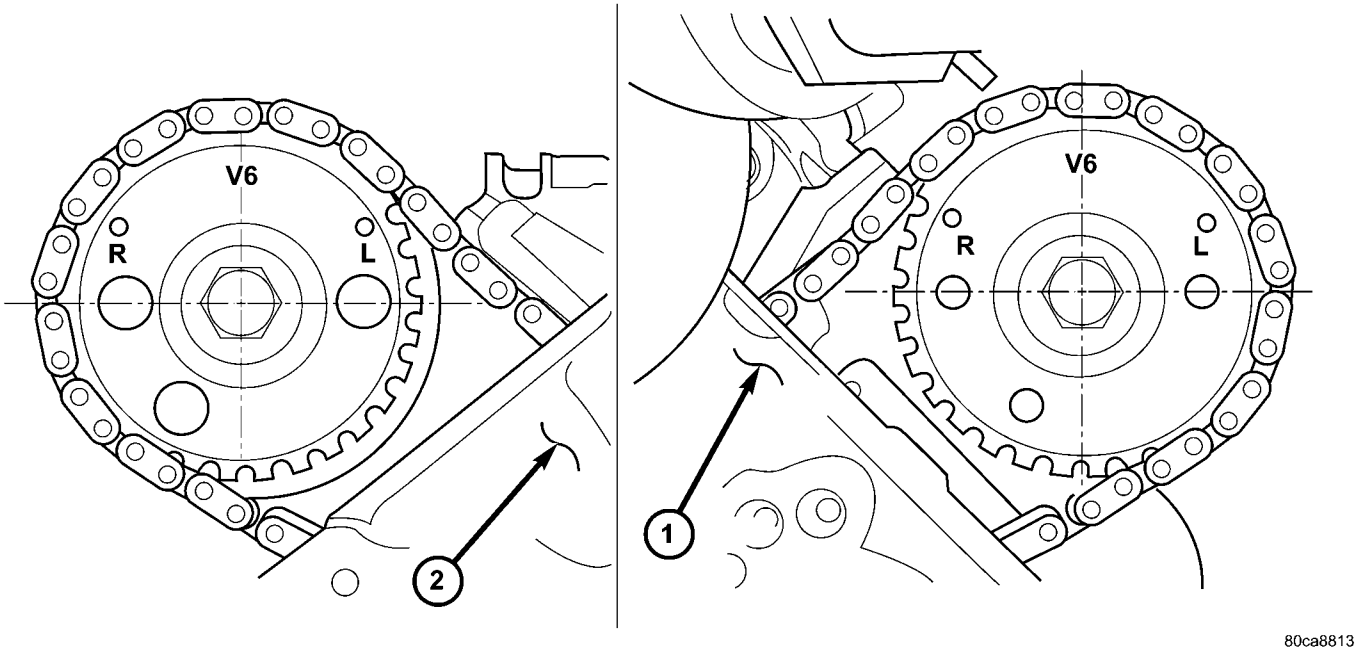

Fig. 114 CAMSHAFT SPROCKET V6 MARKS (#1 TDC, Exhaust stroke)

1 - LEFT CYLINDER HEAD
2 - RIGHT CYLINDER HEAD

VALVE TIMING (Continued)

TIMING - SINGLE CAMSHAFT

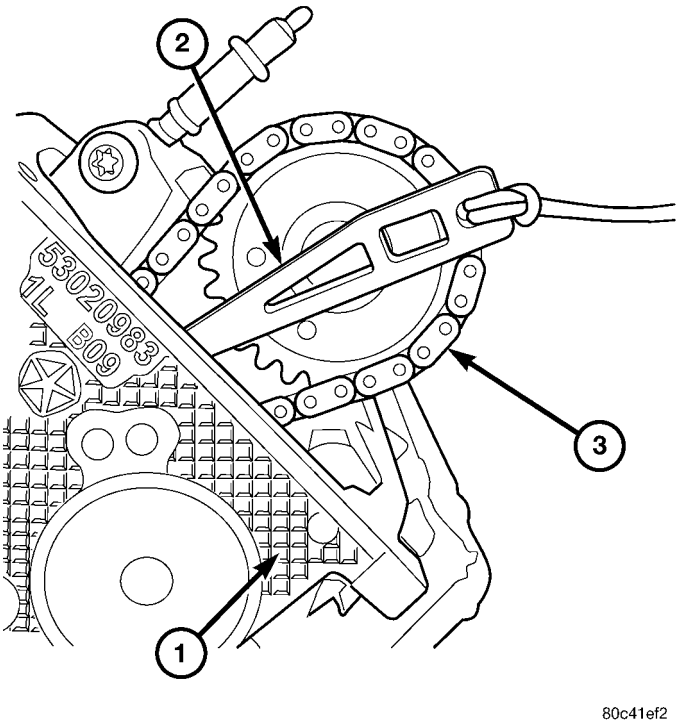

Fig. 116 SECURING TIMING CHAIN TENSIONER USING TIMING CHAIN WEDGE

1 - CYLINDER HEAD
2 -SPECIAL TOOL 8379
3 - TIMING CHAIN

NOTE: to adjust the timing on one camshaft, preform the following procedure.

(1) Using Chain Tensioner Wedge (Fig. 116), Special Tool 8379 (2), stabilize the secondary chain drive. For reference purposes, mark the chain-to-sprocket position.

(2) Remove the camshaft drive gear retaining bolt (Fig. 117)(3).

(3) Carefully remove the camshaft drive gear from the camshaft.

(4) Re-index the camshaft drive gear in the chain until the V6 mark is at the same position as the V6 mark on the opposite camshaft drive gear (Fig. 118) (1,2).

(5) Using Special Tool 8428 Camshaft Wrench, rotate the camshaft until the alignment dowel on the camshaft is aligned with the slot in the camshaft drive gear.

CAUTION: Remove excess oil from camshaft sprocket retaining bolt before reinstalling bolt. Failure to do so may cause over-torqueing of bolt resulting in bolt failure.

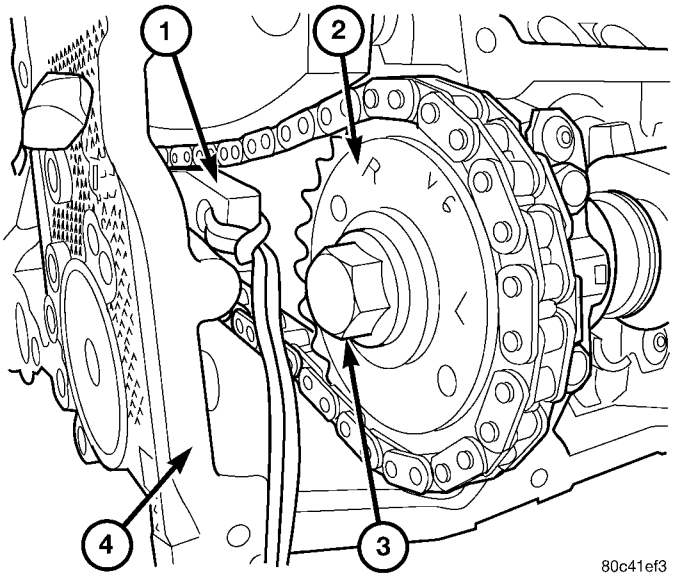

Fig. 117 CAMSHAFT DRIVE GEAR REMOVAL/ INSTALLATION

1 - SPECIAL TOOL 8379 TIMING CHAIN WEDGE
2 - CAMSHAFT DRIVE GEAR
3 - RETAINING BOLT
4 - CYLINDER HEAD

(6) Position the camshaft drive gear onto the camshaft, remove oil from bolt then install the retaining bolt. Using Special Tools, Spanner Wrench 6958 with Adapter Pins 8346 and a suitable torque wrench, Tighten retaining bolt to 122 N·m (90 ft. Lbs.).

(7) Remove Special Tool 8379.

(8) Rotate the crankshaft two full revolutions, then verify that the camshaft drive gear V6 marks are in fact aligned.

(9) Install the cylinder head covers. Refer to Cylinder Head Cover in this section.

BALANCE SHAFT

REMOVAL

(1) Remove the primary and secondary timing chains. Refer to TIMING CHAIN and SPROCKET.

NOTE: The balance shaft and gear are serviced as an assembly. Do not attempt to remove the gear from the balance shaft.Remove the retaining bolt (4) from the counterbalance shaft thrust plate (Fig. 119) (2).

(2) Using Special Tool 8641 Counterbalance shaft remover/installer tool (1), remove the counterbalance shaft from the engine (Fig. 120).

BALANCE SHAFT (Continued)

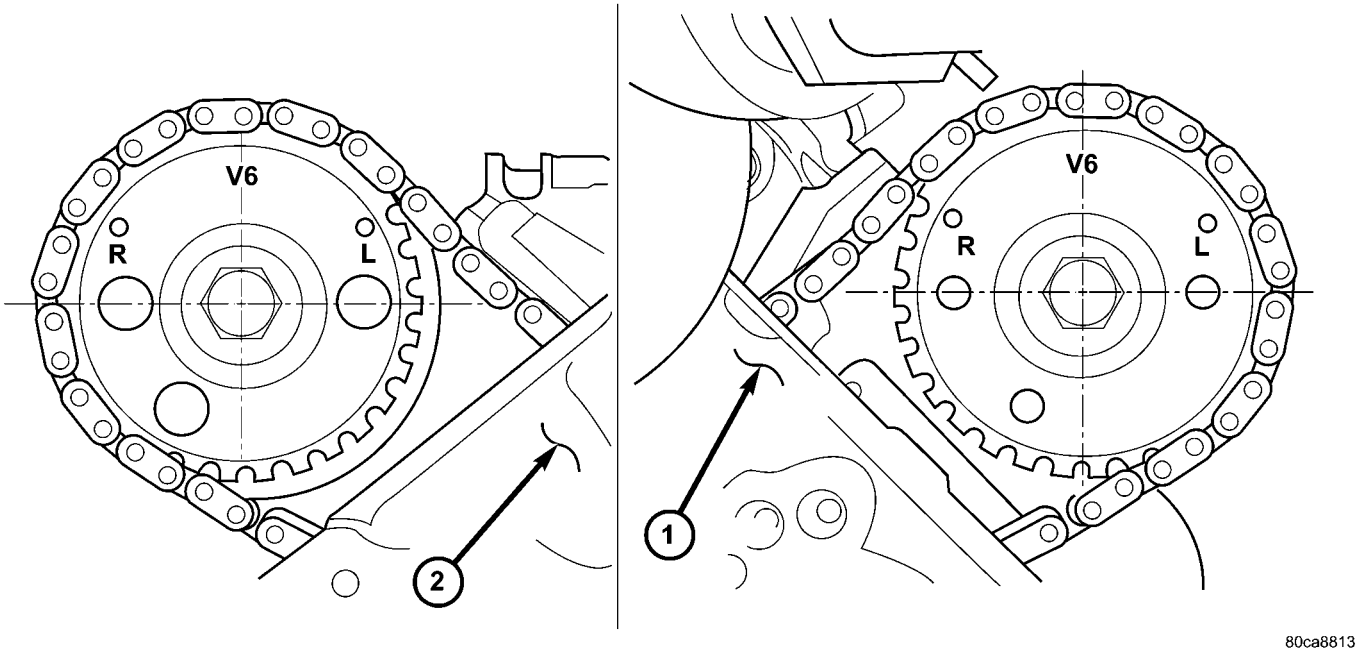

Fig. 118 CAMSHAFT SPROCKET V6 MARKS (#1 TDC, Exhaust stroke)

1 - LEFT CYLINDER HEAD
2 - RIGHT CYLINDER HEAD

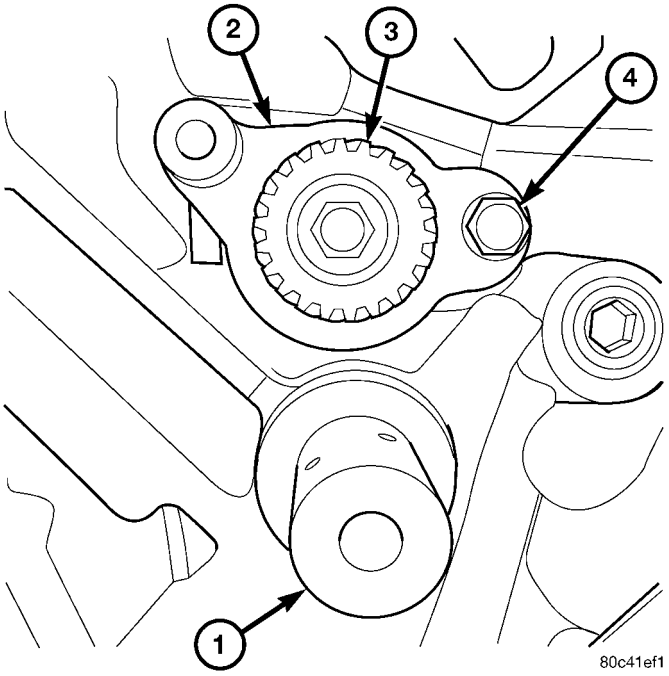

Fig. 119 Counterbalance Shaft Retaining Plate

1 - IDLER SHAFT
2 - COUNTERBALANCE SHAFT THRUST PLATE
3 - COUNTERBALANCE SHAFT DRIVE GEAR
4 - RETAINING BOLT

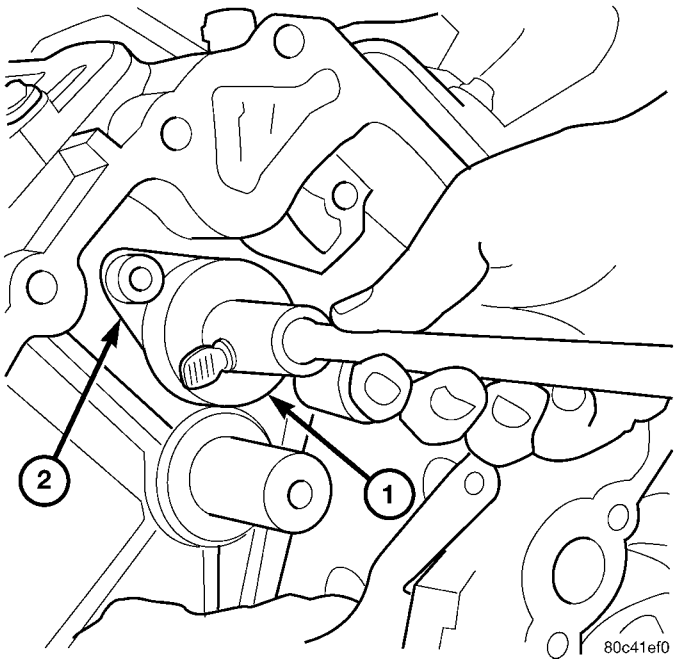

Fig. 120 Counterbalance Shaft Removal/Installation Tool

1 - COUNTERBALANCE SHAFT REMOVAL AND INSTALLATION TOOL
2 - COUNTERBALANCE SHAFT THRUST PLATE

BALANCE SHAFT (Continued)

INSTALLATION

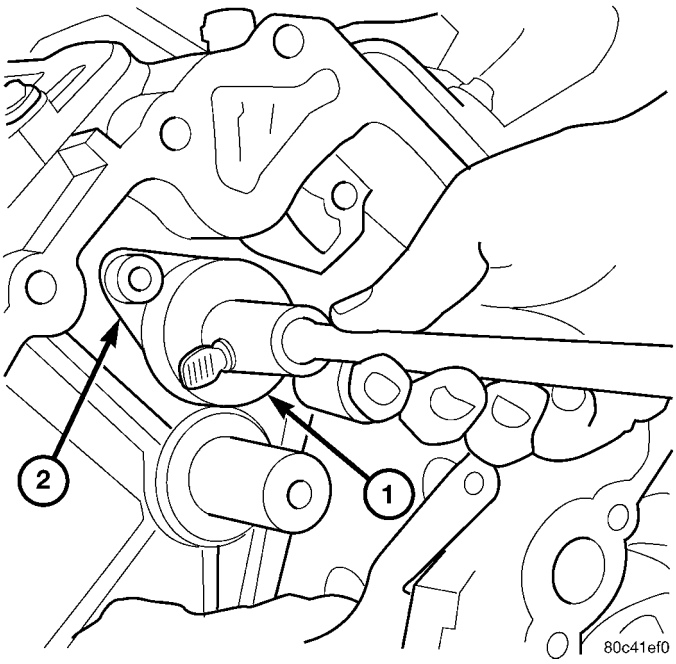

Fig. 121 Counterbalance Shaft Removal/Installation Tool

1 - COUNTERBALANCE SHAFT REMOVAL AND INSTALLATION TOOL
2 - COUNTERBALANCE SHAFT THRUST PLATE

NOTE: The balance shaft and gear are serviced as an assembly. Do not attempt to remove the gear from the balance shaft.

(1) Coat counterbalance shaft bearing journals with clean engine oil.

NOTE: The balance shaft is heavy, and care should be used when installing shaft, so bearings are not damaged.

(2) Using Special Tool 8641 Counterbalance shaft remover/installer tool (1), carefully install counterbalance shaft into engine (Fig. 121).

(3) Install Counterbalance shaft thrust plate retaining bolt (4) finger tight.Do not tighten bolt at this time.

(4) Position the right side of the thrust plate with the right chain guide bolt, install bolt finger tight.

(5) Torque the thrust plate retaining bolt (Fig. 122) (4) to 28 N·m (250 in. lbs.).

(6) Remove the chain guide bolt so that guide can be installed.

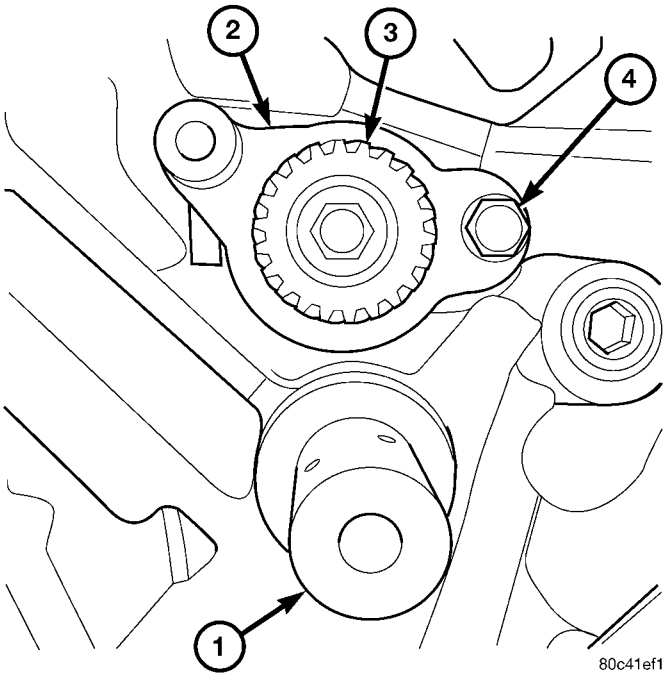

Fig. 122 Counterbalance Shaft Retaining Plate

1 - IDLER SHAFT
2 - COUNTERBALANCE SHAFT THRUST PLATE
3 - COUNTERBALANCE SHAFT DRIVE GEAR
4 - RETAINING BOLT

TIMING BELT / CHAIN COVER(S)

REMOVAL

(1) Disconnect the battery negative cable.

(2) Drain cooling system (Refer to 7 - COOLING - STANDARD PROCEDURE).

(3) Remove electric cooling fan and fan shroud assembly.

(4) Remove fan and fan drive assembly (Refer to 7 - COOLING/ENGINE/FAN DRIVE VISCOUS CLUTCH - REMOVAL).

(5) Disconnect both heater hoses at timing cover.

(6) Disconnect lower radiator hose at engine.

(7) Remove accessory drive belt tensioner assembly (Fig. 123).

(8) Remove crankshaft damper (Refer to 9 - ENGINE/ENGINE BLOCK/VIBRATION DAMPER - REMOVAL).

(9) Remove the generator (Refer to 8 - ELECTRICAL/CHARGING/GENERATOR - REMOVAL).

(10) Remove A/C compressor (Refer to 24 - HEATING & AIR CONDITIONING/PLUMBING/A/C COMPRESSOR - REMOVAL).

TIMING BELT / CHAIN COVER(S) (Continued)

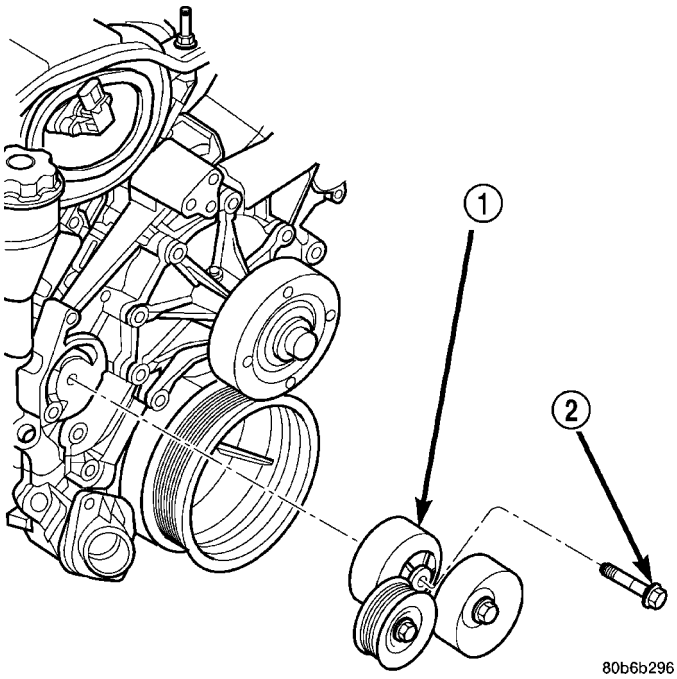

Fig. 123 Accessory Drive Belt Tensioner

1 - TENSIONER ASSEMBLY
2 - FASTENER TENSIONER TO FRONT COVER

CAUTION: The 3.7L engine uses an anerobic sealer instead of a gasket to seal the front cover to the engine block, from the factory. For service, Mopar® Grey Engine RTV sealant must be substituted.

NOTE: It is not necessary to remove the water pump for timing cover removal.

(11) Remove the bolts holding the timing cover to engine block. (Fig. 124).

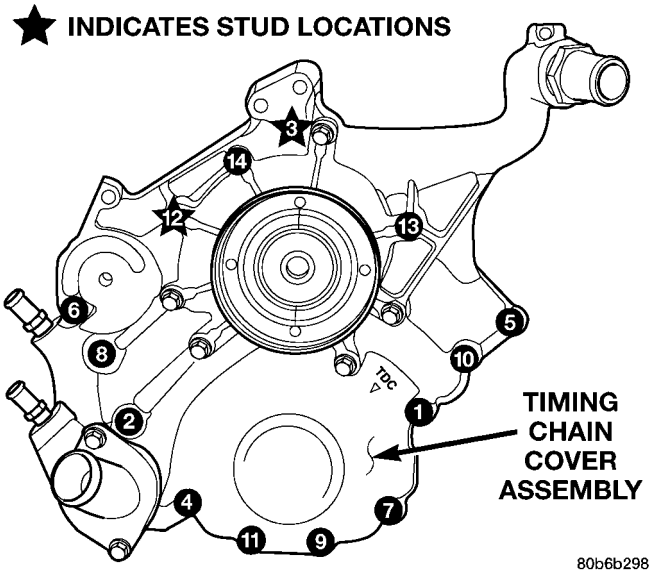

Fig. 124 Timing Chain Cover Fasteners - Typical

(12) Remove the timing cover.

INSTALLATION

CAUTION: Do not use oil based liquids to clean timing cover or block surfaces. Use only rubbing alcohol, along with plastic or wooden scrapers. Use no wire brushes or abrasive wheels or metal scrapers, or damage to surfaces could result.

(1) Clean timing chain cover and block surface using rubbing alcohol.

CAUTION: The 3.7L uses a special anerobic sealer instead of a gasket to seal the timing cover to the engine block, from the factory. For service repairs, Mopar® Grey Engine RTV must be used as a substitute.

(2) Inspect the water passage o-rings for any damage, and replace as necessary.

(3) Apply Mopar® Grey Engine RTV sealer to the front cover following the path below, using a 3 to 4mm thick bead (Fig. 125).

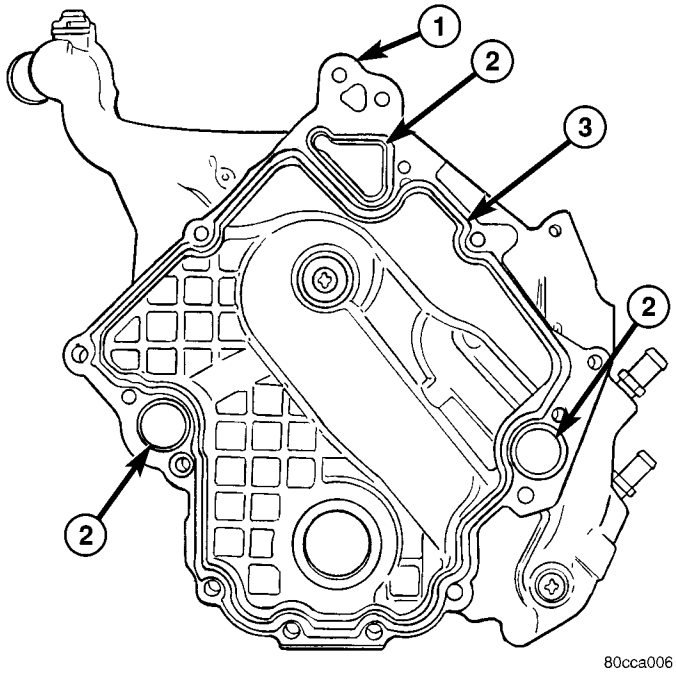

Fig. 125 Timing Cover Sealant

1 - TIMING CHAIN COVER
2 - WATER PASSAGE ORING
3 - MOPAR® ENGINE RTV SEALER

(4) Install cover. Tighten flange head fasteners in sequence as shown in (Fig. 126) to 58 N·m (43 ft. lbs.).

(5) Install crankshaft damper (Refer to 9 - ENGINE/ENGINE BLOCK/VIBRATION DAMPER - INSTALLATION).

TIMING BELT / CHAIN COVER(S) (Continued)

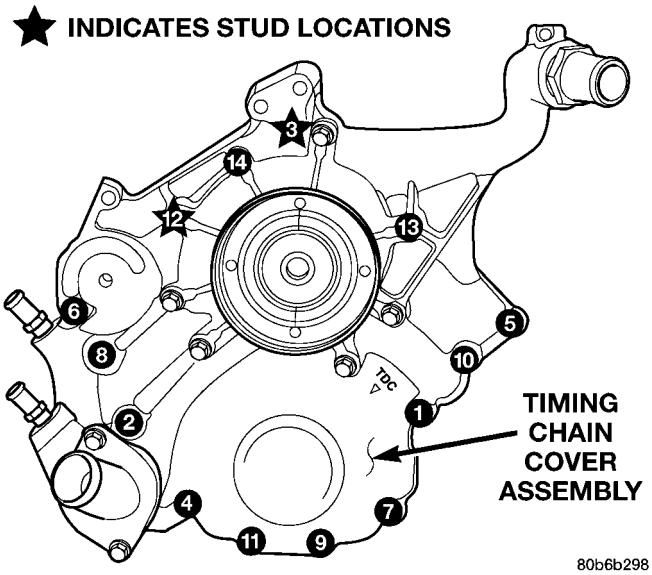

Fig. 126 Timing Chain Cover Fasteners - Typical

(6) Install the A/C compressor (Refer to 24 - HEATING & AIR CONDITIONING/PLUMBING/A/C COMPRESSOR - INSTALLATION).

(7) Install the generator (Refer to 8 - ELECTRICAL/CHARGING/GENERATOR - INSTALLATION).

(8) Install accessory drive belt tensioner assembly (Refer to 7 - COOLING/ACCESSORY DRIVE/BELT TENSIONERS - INSTALLATION).

(9) Install radiator upper and lower hoses.

(10) Install both heater hoses.

(11) Install electric fan shroud and viscous fan drive assembly (Refer to 7 - COOLING/ENGINE/FAN DRIVE VISCOUS CLUTCH - INSTALLATION).

(12) Fill cooling system (Refer to 7 - COOLING - STANDARD PROCEDURE).

(13) Connect the battery negative cable.

IDLER SHAFT

REMOVAL

(1) Remove the primary and secondary timing chains and sprockets. Refer to procedure in this section.

NOTE: To remove the idler shaft, it is necessary to tap threads into the shaft, to install the removal tool.

(2) Using a 12 mm X 1.75 tap, cut threads in the idler shaft center bore.

(3) Cover the radiator core with a suitable cover.

CAUTION: Use care when removing the idler shaft, Do not strike the radiator cooling fins with the slide hammer.

(4) Using Special Tool 8517 Slide Hammer, remove the idler shaft.

INSTALLATION

(1) Thoroughly clean the idler shaft bore.

(2) Position the idler shaft in the bore.

NOTE: The two lubrication holes in the idler shaft do not require any special alignment.

NOTE: Before using the retaining bolt to install the idler shaft, coat the threads and the pilot on the idler shaft, with clean engine oil.

(3) Using the primary idler sprocket retaining bolt and washer, carefully draw the idler shaft into the bore until fully seated.

(4) Coat the idler shaft with clean engine oil.

(5) Install the timing chains and sprockets. Refer to procedure in this section.

TIMING BELT/CHAIN AND SPROCKET(S)

REMOVAL

(1) Disconnect negative cable from battery.

(2) Drain cooling system (Refer to 7 - COOLING - STANDARD PROCEDURE).

(3) Remove right and left cylinder head covers (Refer to 9 - ENGINE/CYLINDER HEAD/CYLINDER HEAD COVER(S) - REMOVAL).

(4) Remove radiator fan shroud (Refer to 7 - COOLING/ENGINE/RADIATOR FAN - REMOVAL).

(5) Rotate engine until timing mark on crankshaft damper aligns with TDC mark on timing chain cover (Fig. 128) and the camshaft sprocket “V6” marks are at the 12 o’clock position (#1 TDC exhaust stroke) (Fig. 127).

(6) Remove power steering pump (Refer to 19 - STEERING/PUMP - REMOVAL).

(7) Remove access plug from left and right cylinder heads for access to chain guide fasteners (Fig. 129).

(8) Remove the oil fill housing to gain access to the right side tensioner arm fastener.

(9) Remove crankshaft damper (Refer to 9 - ENGINE/ENGINE BLOCK/VIBRATION DAMPER - REMOVAL) and timing chain cover (Refer to 9 - ENGINE/VALVE TIMING/TIMING BELT / CHAIN COVER(S) - REMOVAL).

(10) Collapse and pin primary chain tensioner.

CAUTION: Plate behind left secondary chain tensioner could fall into oil pan. Therefore, cover pan opening.

TIMING BELT/CHAIN AND SPROCKET(S) (Continued)

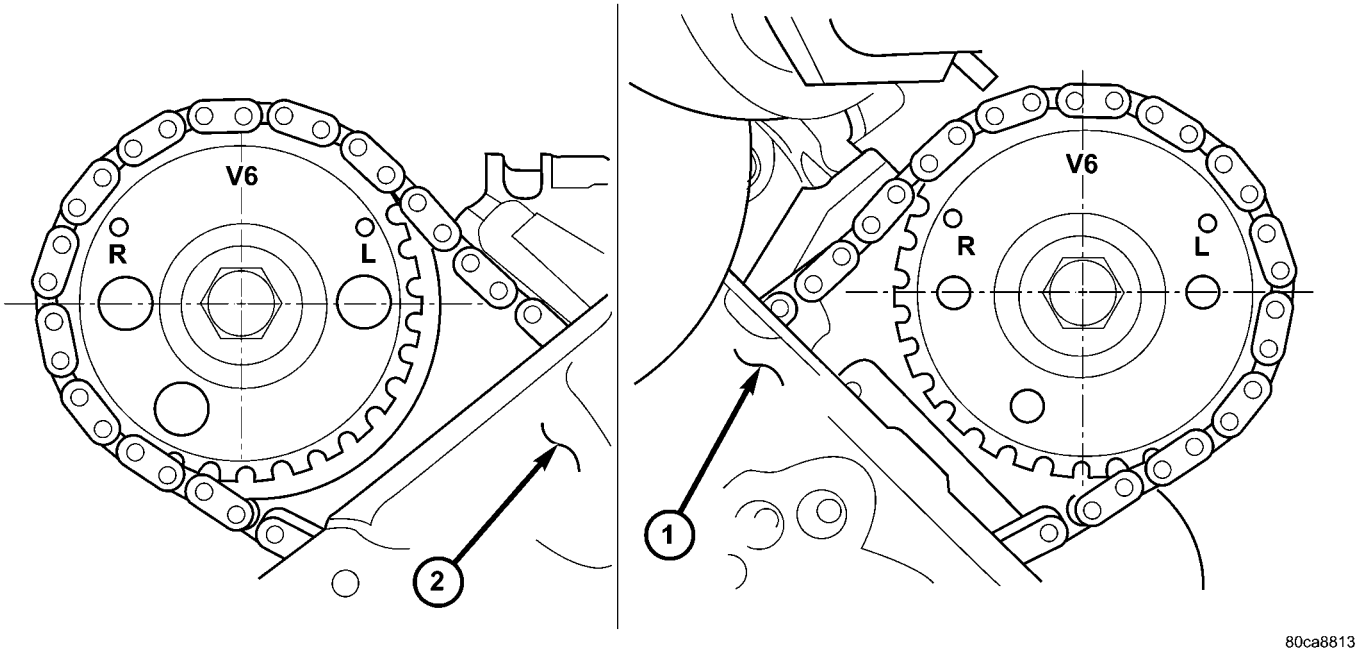

Fig. 127 Camshaft Sprocket V6 Marks (#1 TDC, Exhaust stroke)

1 - LEFT CYLINDER HEAD
2 - RIGHT CYLINDER HEAD

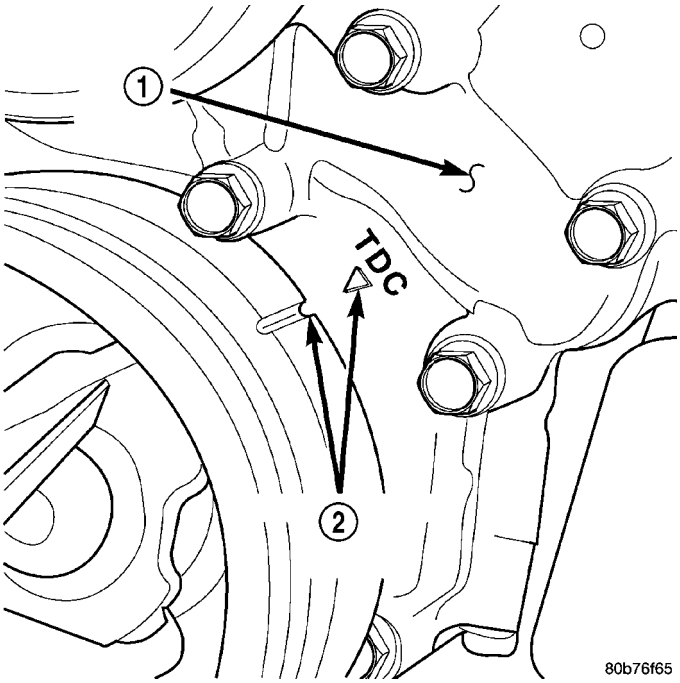

Fig. 128 Engine Top Dead Center

1 - TIMING CHAIN COVER
2 - CRANKSHAFT TIMING MARKS

(11) Remove secondary chain tensioners.
(12) Remove camshaft position sensor (Fig. 130).

CAUTION: Care should be taken not to damage camshaft target wheel. Do not hold target wheel while loosening or tightening camshaft sprocket. Do not place the target wheel near a magnetic source of any kind. A damaged or magnetized target wheel could cause a vehicle no start condition.

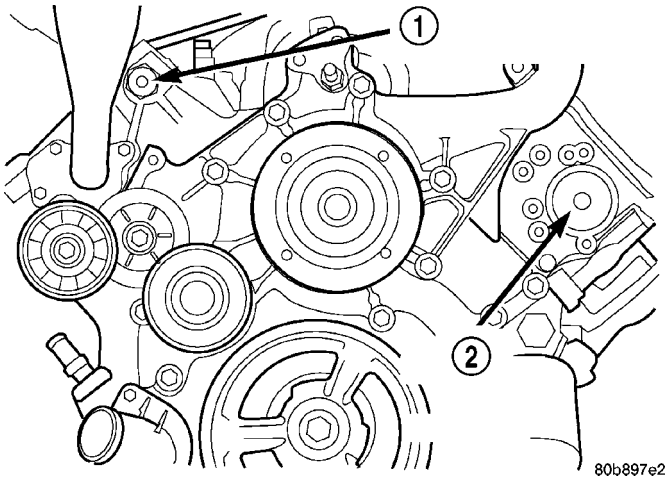

Fig. 129 Cylinder Head Access Plugs

1 - RIGHT CYLINDER HEAD ACCESS PLUG
2 - LEFT CYLINDER HEAD ACCESS PLUG

CAUTION: Do not forcefully rotate the camshafts or crankshaft independently of each other. Damaging intake valve to piston contact will occur. Ensure negative battery cable is disconnected to guard against accidental starter engagement.

TIMING BELT/CHAIN AND SPROCKET(S) (Continued)

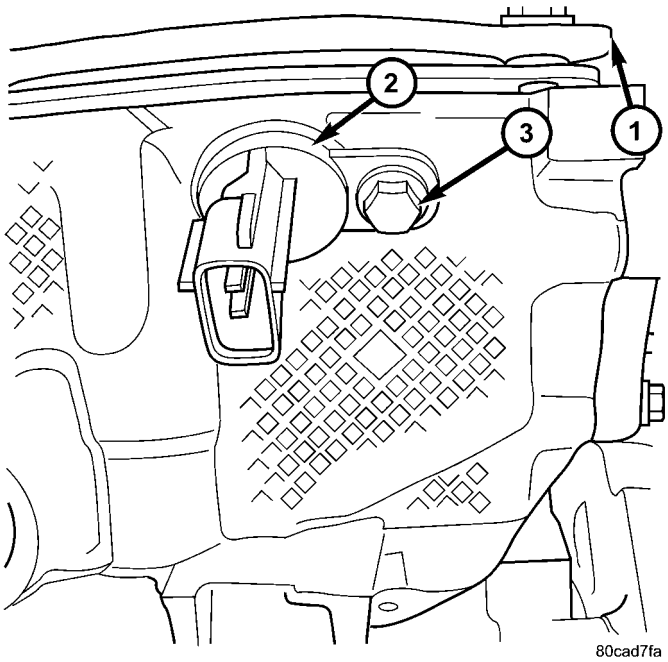

Fig. 130 Camshaft Position Sensor

1 - CYLINDER HEAD
2 - CAMSAHFT POSITION SENSOR
3 - SCREW

(13) Remove left and right camshaft sprocket bolts.

(14) While holding the left camshaft steel tube with Special Tool 8428 Camshaft Wrench, remove the left camshaft sprocket. Slowly rotate the camshaft approximately 5 degrees clockwise to a neutral position.

(15) While holding the right camshaft steel tube with Special Tool 8428 Camshaft Wrench, remove the right camshaft sprocket.

(16) Remove idler sprocket assembly bolt.

(17) Slide the idler sprocket assembly and crank sprocket forward simultaneously to remove the primary and secondary chains.

(18) Remove both pivoting tensioner arms and chain guides.

(19) Remove primary chain tensioner.

INSPECTION

Inspect the following components:

- Sprockets for excessive tooth wear. Some tooth markings are normal and not a cause for sprocket replacement.
- Idler sprocket assembly bushing and shaft for excessive wear.
- Idler sprocket assembly spline joint. The joint should be tight with no backlash or axial movement.
- Chain guides and tensioner arms. Replace these parts if grooving in plastic face is more than 1 mm (0.039 in.) deep. If plastic face is severely grooved or melted, the tensioner lube jet may be clogged. The tensioner should be replaced.
- Secondary chain tensioner piston and ratcheting device. Inspect for evidence of heavy contact between tensioner piston and tensioner arm. If this condition exist the tensioner tensioner arm and chain should be replaced.
- Primary chain tensioner plastic faces. Replace as required.

INSTALLATION

(1) Using a vise, lightly compress the secondary chain tensioner piston until the piston step is flush with the tensioner body. Using a pin or suitable tool, release ratchet pawl by pulling pawl back against spring force through access hole on side of tensioner. While continuing to hold pawl back, Push ratchet device to approximately 2 mm from the tensioner body. Install Special Tool 8514 lock pin into hole on front of tensioner (Fig. 131). Slowly open vise to transfer piston spring force to lock pin.

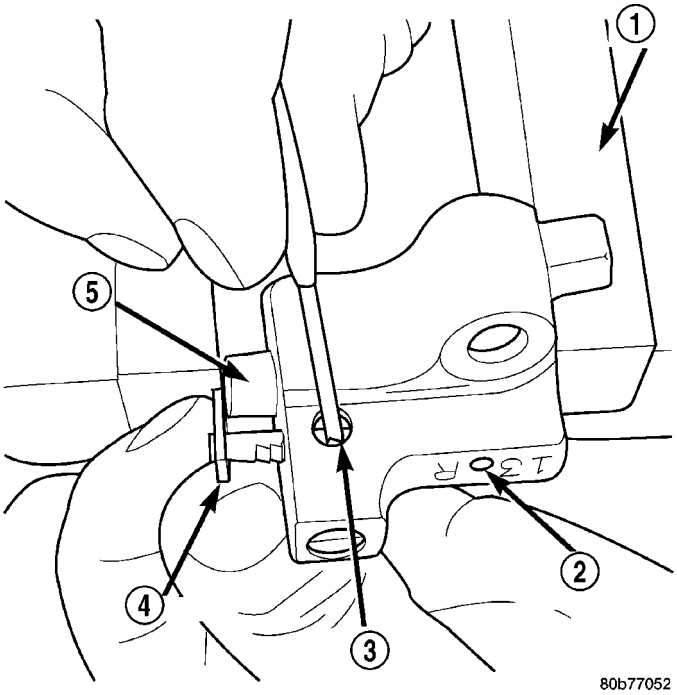

Fig. 131 Resetting Secondary Chain Tensioners

1 - VISE
2 - INSERT LOCK PIN
3 - RATCHET PAWL
4 - RATCHET
5 - PISTON

(2) Position primary chain tensioner over oil pump and insert bolts into lower two holes on tensioner bracket. Tighten bolts to 28 N·m (250 in. lbs.).

NOTE: Left and right chain guides are not interchangeable.

TIMING BELT/CHAIN AND SPROCKET(S) (Continued)

(3) Install right side chain tensioner arm. Install torx® bolt. Tighten torx® bolt to 28 N·m (250 in. lbs.).

CAUTION: The silver bolts retain the guides to the cylinder heads and the black bolts retain the guides to the engine block.

(4) Install the left side chain guide. Tighten the bolts to 28 N·m (250 in. lbs.).

(5) Install left side chain tensioner arm, and torx® bolt. Tighten torx® bolt to 28 N·m (250 in. lbs.).

(6) Install the right side chain guide. Tighten the bolts to 28 N·m (250 in. lbs.).

(7) Install both secondary chains onto the idler sprocket. Align two plated links on the secondary chains to be visible through the two lower openings on the idler sprocket (4 o'clock and 8 o'clock). Once the secondary timing chains are installed, position special tool 8429 to hold chains in place for installation.

(8) Align primary chain double plated links with the timing mark at 12 o'clock on the idler sprocket. Align the primary chain single plated link with the timing mark at 6 o'clock on the crankshaft sprocket.

(9) Lubricate idler shaft and bushings with clean engine oil.

NOTE: The idler sprocket must be timed to the counterbalance shaft drive gear before the idler sprocket is fully seated.

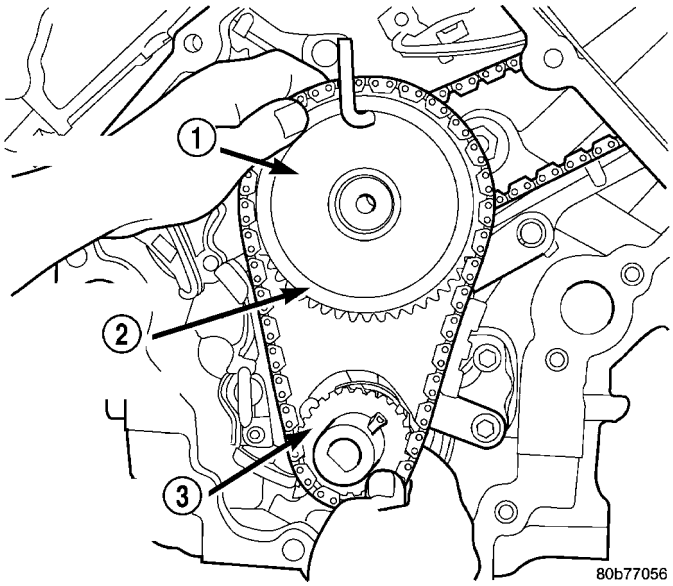

Fig. 132 Installing Idler Gear, Primary and Secondary Timing Chains

1 - SPECIAL TOOL 8429
2 - PRIMARY CHAIN IDLER SPROCKET
3 - CRANKSHAFT SPROCKET

(10) Install all chains, crankshaft sprocket, and idler sprocket as an assembly (Fig. 132). After guiding both secondary chains through the block and cylinder head openings, affix chains with a elastic strap or equivalent. This will maintain tension on chains to aid in installation. Align the timing mark on the idler sprocket gear to the timing mark on the counterbalance shaft drive gear, then seat idler sprocket fully (Fig. 133). Before installing idler sprocket bolt, lubricate washer with oil, and tighten idler sprocket assembly retaining bolt to 34 N·m (25 ft. lbs.).

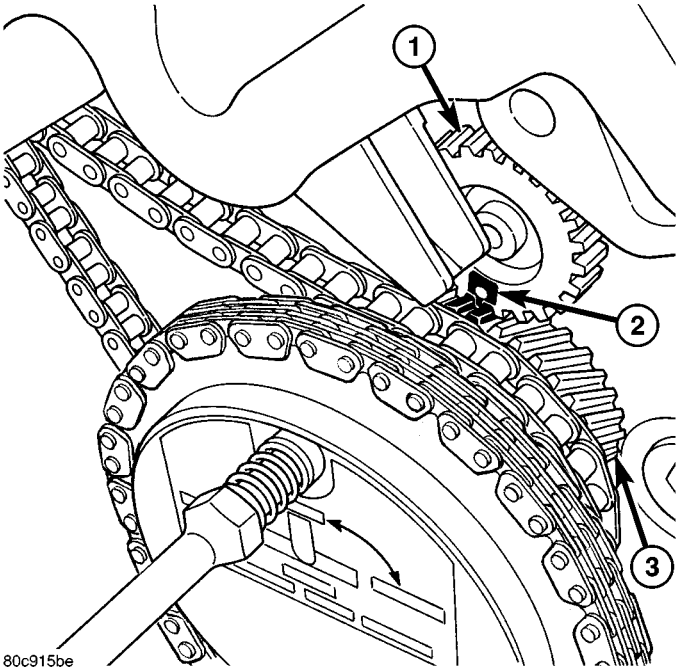

Fig. 133 Counterbalance Shaft Alignment Marks

1 - COUNTERBALANCE SHAFT GEAR
2 - TIMING MARK
3 - IDLER SPROCKET GEAR

NOTE: It will be necessary to slightly rotate camshafts for sprocket installation.

(11) Align left camshaft sprocket "L" dot to plated link on chain.

(12) Align right camshaft sprocket "R" dot to plated link on chain.

CAUTION: Remove excess oil from the camshaft sprocket bolt. Failure to do so can result in overtorque of bolt resulting in bolt failure.

(13) Remove Special Tool 8429, then attach both sprockets to camshafts. Remove excess oil from bolts, then Install sprocket bolts, but do not tighten at this time.

(14) Verify that all plated links are aligned with the marks on all sprockets and the "V6" marks on camshaft sprockets are at the 12 o'clock position.

TIMING BELT/CHAIN AND SPROCKET(S) (Continued)

CAUTION: Ensure the plate between the left secondary chain tensioner and block is correctly installed.

(15) Install both secondary chain tensioners. Tighten bolts to 28 N·m (250 in. lbs.).

NOTE: Left and right secondary chain tensioners are not common.

(16) Remove all locking pins (3) from tensioners.

CAUTION: After pulling locking pins out of each tensioner, DO NOT manually extend the tensioner(s) ratchet. Doing so will over tension the chains, resulting in noise and/or high timing chain loads.

(17) Using Special Tool 6958, Spanner with Adaptor Pins 8346, tighten left (Fig. 134) and right (Fig. 135). camshaft sprocket bolts to 122 N·m (90 ft. lbs.).

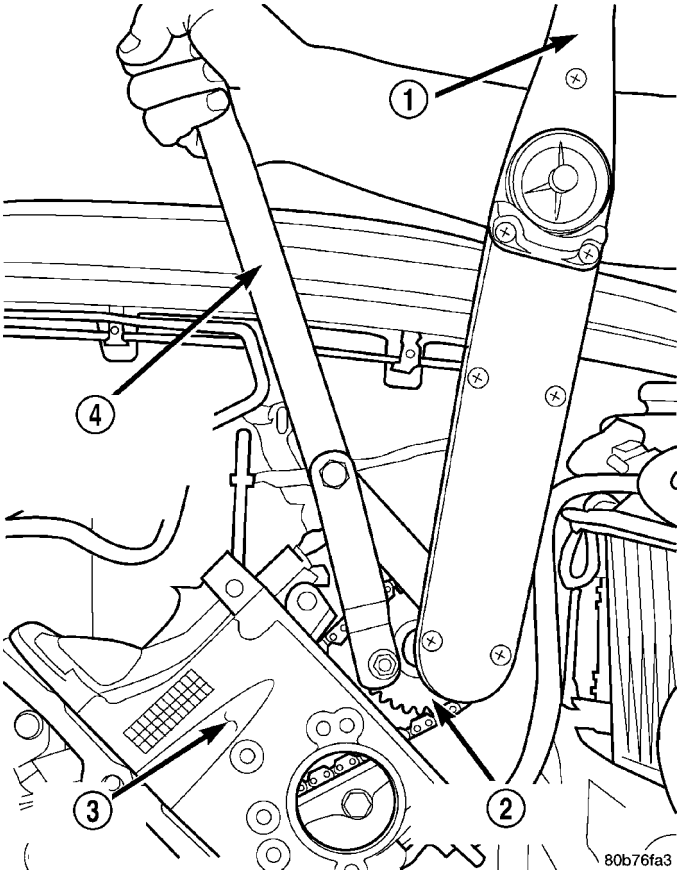

Fig. 134 Tightening Left Side Camshaft Sprocket Bolt

1 - TORQUE WRENCH
2 - CAMSHAFT SPROCKET
3 - LEFT CYLINDER HEAD
4 - SPECIAL TOOL 6958 SPANNER WITH ADAPTER PINS 8346

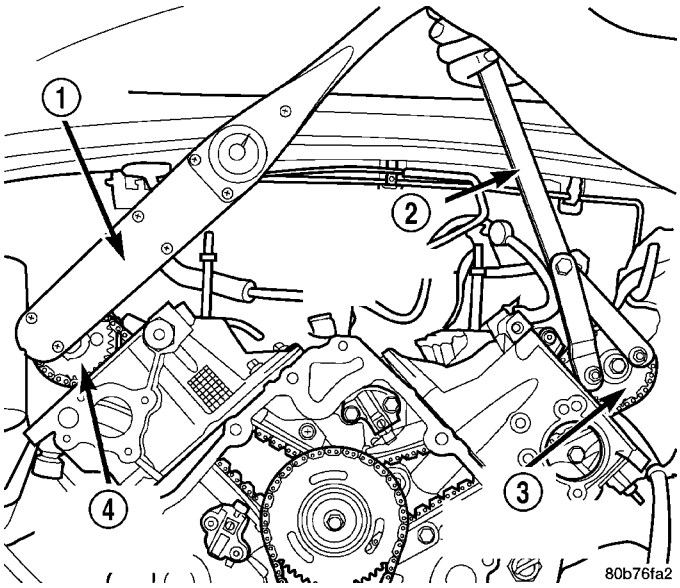

Fig. 135 Tightening Right Side Camshaft Sprocket Bolt

1 - TORQUE WRENCH
2 - SPECIAL TOOL 6958 WITH ADAPTER PINS 8346
3 - LEFT CAMSHAFT SPROCKET
4 - RIGHT CAMSHAFT SPROCKET

(18) Rotate engine two full revolutions. Verify timing marks are at the follow locations:

- primary chain idler sprocket dot is at 12 o'clock
- primary chain crankshaft sprocket dot is at 6 o'clock
- secondary chain camshaft sprockets "V6" marks are at 12 o'clock
- counterbalancer shaft drive gear dot is aligned to the idler sprocket gear dot

(19) Lubricate all three chains with engine oil.

(20) After installing all chains, it is recommended that the idler gear end play be checked (Fig. 136). The end play must be within 0.10–0.25 mm (0.004–0.010 in.). If not within specification, the idler gear must be replaced.

(21) Install timing chain cover and crankshaft damper. Refer to procedures.

(22) Install cylinder head covers. Refer to procedures.

TIMING BELT/CHAIN AND SPROCKET(S) (Continued)

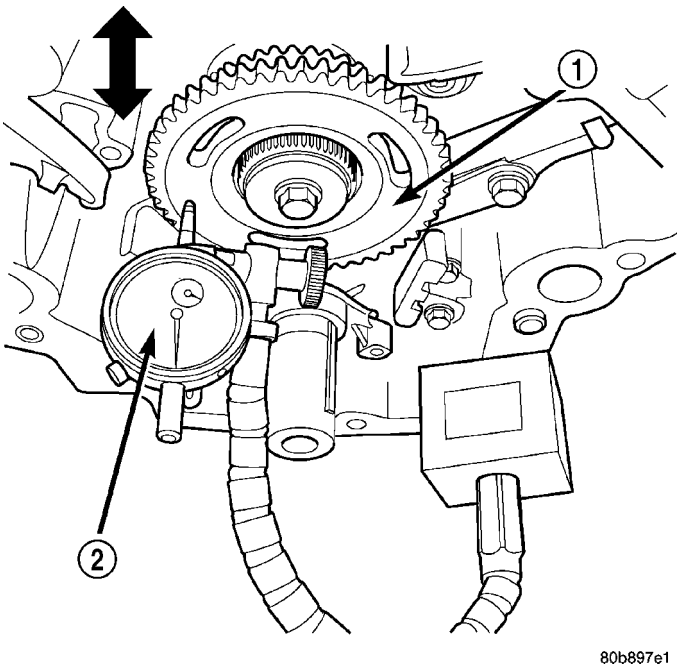

Fig. 136 Measuring Idler Gear End Play

1 - IDLER SPROCKET ASSEMBLY
2 - DIAL INDICATOR

NOTE: Before installing threaded plug in right cylinder head, the plug must be coated with sealant to prevent leaks.

(23) Coat the large threaded access plug with **Mopar® Thread Sealant with Teflon**, then install into the right cylinder head and tighten to 81 N·m (60 ft. lbs.).

(24) Install the oil fill housing.

(25) Install access plug in left cylinder head.

(26) Install power steering pump.

(27) Fill cooling system.

(28) Connect negative cable to battery.

2.8L COMMON RAIL DIESEL ENGINE

TABLE OF CONTENTS

page

2.8L COMMON RAIL DIESEL ENGINE
DESCRIPTION
2.8L COMMON RAIL DIESEL ENGINE 165
ENGINE COVER 166
DIAGNOSIS AND TESTING
ENGINE DIAGNOSIS - MECHANICAL 166
SMOKE DIAGNOSIS CHARTS 169
STANDARD PROCEDURE
FORM-IN-PLACE GASKETS AND SEALERS . 171
REPAIR DAMAGED OR WORN THREADS . . 172
HYDROSTATIC LOCK 172
REMOVAL
2.8L COMMON RAIL DIESEL ENGINE 172
ENGINE COVER 177
INSTALLATION
2.8L COMMON RAIL DIESEL ENGINE 177
ENGINE COVER 181
SPECIFICATIONS
ENGINE SPECIFICATIONS 182
TORQUE 185
SPECIAL TOOLS 187
AIR CLEANER ELEMENT
REMOVAL 191
INSTALLATION 191
AIR CLEANER HOUSING
REMOVAL 191
INSTALLATION 191
CYLINDER HEAD
DESCRIPTION 192
STANDARD PROCEDURE
VALVE SEALS - IN VEHICLE 192
VALVE SERVICE 193
STANDARD PROCEDURE - MEASURING PISTON PROTRUSION 194
REMOVAL - CYLINDER HEAD 195
CLEANING 196
INSPECTION 197
INSTALLATION - CYLINDER HEAD 197
CAMSHAFT OIL SEAL(S)
REMOVAL 199
INSTALLATION 200
CAMSHAFT(S)
DESCRIPTION 200
OPERATION 200
REMOVAL - CAMSHAFTS 200
INSTALLATION - CAMSHAFTS 201
CYLINDER HEAD COVER
DESCRIPTION 202
REMOVAL - CYLINDER HEAD COVER 202
INSTALLATION 204
ROCKER ARMS
DESCRIPTION 206
OPERATION 206
REMOVAL 206
INSTALLATION 206
HYDRAULIC LIFTERS
DESCRIPTION 207
REMOVAL 207
INSPECTION 208
INSTALLATION 208
ENGINE BLOCK
DESCRIPTION 208
CRANKSHAFT
DESCRIPTION 208
OPERATION 208
STANDARD PROCEDURE - CHECKING CRANKSHAFT END PLAY 208
REMOVAL - CRANKSHAFT 208
INSTALLATION - CRANKSHAFT 211
CRANKSHAFT MAIN BEARINGS
REMOVAL 213
INSTALLATION 214
CRANKSHAFT OIL SEAL - FRONT
REMOVAL 216
INSTALLATION 216
CRANKSHAFT OIL SEAL - REAR
DESCRIPTION 218
REMOVAL 218
INSTALLATION 219
FLEX PLATE
REMOVAL 219
INSTALLATION 219
CYLINDER LINERS
DESCRIPTION 220
REMOVAL 220
INSPECTION 220
INSTALLATION 221
PISTON & CONNECTING ROD
DESCRIPTION 222
STANDARD PROCEDURE - PISTON RING FITTING 223
REMOVAL 223
INSPECTION 224
INSTALLATION 225
VIBRATION DAMPER
REMOVAL 228
INSTALLATION 228

INTERNAL VACUUM PUMP
DESCRIPTION 228
REMOVAL 228
INSTALLATION 229
ENGINE COVER - FRONT
DESCRIPTION 230
REMOVAL 230
INSTALLATION 230
LEFT MOUNT
REMOVAL 231
INSTALLATION 231
RIGHT MOUNT
REMOVAL 232
INSTALLATION 232
OIL
DESCRIPTION 233
OIL PAN
REMOVAL 233
INSTALLATION 233
OIL PRESSURE RELIEF VALVE
DESCRIPTION 234
REMOVAL 234
INSTALLATION 234
OIL PRESSURE SENDING UNIT
DESCRIPTION 235
OPERATION 235
REMOVAL 235
INSTALLATION 236
OIL PUMP
REMOVAL
REMOVAL - OIL PUMP PICKUP TUBE 237
REMOVAL - OIL PUMP 237
INSTALLATION
INSTALLATION - OIL PUMP PICKUP TUBE . 238
INSTALLATION - OIL PUMP 238
OIL JET
DESCRIPTION 239
REMOVAL 239
INSTALLATION 240
OIL SEPARATOR
REMOVAL 240
INSTALLATION 241
OIL COOLER
DESCRIPTION 241
REMOVAL 241
INSTALLATION 242
INTAKE MANIFOLD
DESCRIPTION 242
REMOVAL 242
INSTALLATION 242
EXHAUST MANIFOLD
REMOVAL 242
INSTALLATION 242
VALVE TIMING
STANDARD PROCEDURE - LOCKING ENGINE 90 DEGREES AFTER TDC 242
BALANCE SHAFT
DESCRIPTION 245
OPERATION 245
REMOVAL 245
INSTALLATION 245
TIMING BELT / CHAIN COVER(S)
REMOVAL
REMOVAL - TIMING BELT INNER COVER . . 247
REMOVAL - TIMING BELT OUTER COVER . 248
INSTALLATION
INSTALLATION - TIMING BELT INNER COVER 248
INSTALLATION - TIMING BELT OUTER COVER 249
TIMING BELT IDLER PULLEY
REMOVAL 249
INSTALLATION 250
TIMING BELT/CHAIN AND SPROCKET(S)
REMOVAL 251
INSTALLATION 252
TIMING BELT/CHAIN TENSIONER & PULLEY
REMOVAL 253
INSTALLATION 254
ADJUSTMENTS
ADJUSTMENT - TIMING BELT TENSIONER 255

2.8L COMMON RAIL DIESEL ENGINE

DESCRIPTION

2.8L COMMON RAIL DIESEL ENGINE

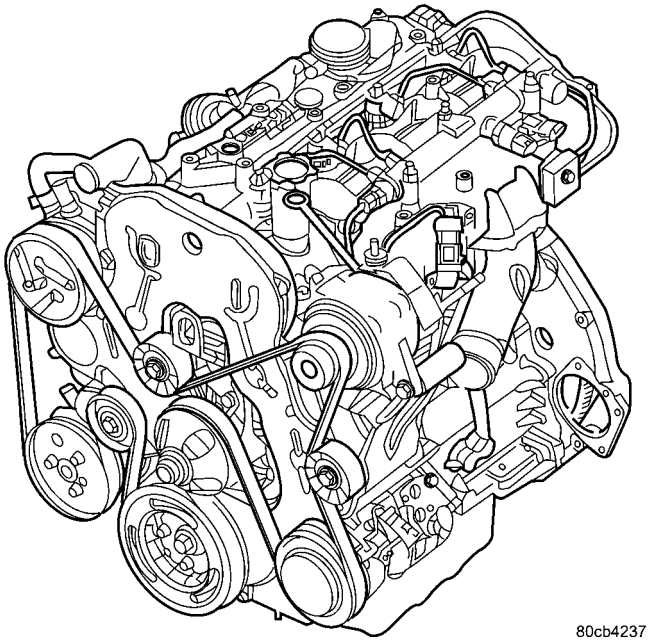

Fig. 1 2.8L COMMON RAIL DIESEL ENGINE

The 2.8L (2776cc) four-cylinder “common rail” direct injection engine is an in-line overhead valve design. The engine utilize a cast iron cylinder block with a closed lower structure and tunnel housing for the crankshaft. The engine has a one piece aluminum cylinder head with four valves per cylinder and dual overhead cam shafts. The 2.8L is turbocharged, intercooled and also equipped with a EGR cooler. (Fig. 1).

The identification stamp for the 2.8L is located on the left side of the engine block, above the starter. The engine code label is located on the front timing cover and is the same as the engine I.D. and serial number. There is also a fuel system label on the front timing cover used for fuel system identification during ECM programming.

DESCRIPTION	SPECIFICATION
Displacement 2.8L	2.8L (2776cc)
Bore	94.00 mm
Stroke	100.00 mm
Compression Ratio	17.5:1
Vacuum at Idle	700 mm/Hg (27.5 In/Hg)
Belt Tension	Automatic Belt Tensioner
Thermostat Opening	80°C ± 2°C
Generator Rating	Denso 12V-95A
Cooling System Capacity	13.8 Liters W/O Auxiliary Heater 16.6 Liters With Auxiliary Heater
Engine Oil Capacity	6.0L W/Filter Change
Timing System	Belt Driven DOHC Overhead Camshafts
Air Intake	Dry Filter With Turbocharger and Charge Air Cooler
Fuel Supply	Gear - Style Pump Incorporated In The High Pressure Pump
Fuel System	Direct Fuel Injection Common Rail System
Combustion Cycle	4 Stroke
Cylinder Compression Difference Between Cylinders	5 Bar (72.5 psi.)
Cooling System	Water Cooling
Injection Pump	CP3 2nd. Generation Common Rail System
Lubrication	Pressure Lubricated By Rotary Pump
Minimum Oil Pressure (Warm)	0.7 Bar (10 psi.) at Idle 2 Bar (29 psi) at 3800 rpm
Engine Rotation	Clockwise Viewed From Front Cover

2.8L COMMON RAIL DIESEL ENGINE (Continued)

ENGINE COVER

The insulated engine cover (2) (Fig. 2) is made of plastic and used cosmetically to cover the top of the engine and greatly reduce engine noise.

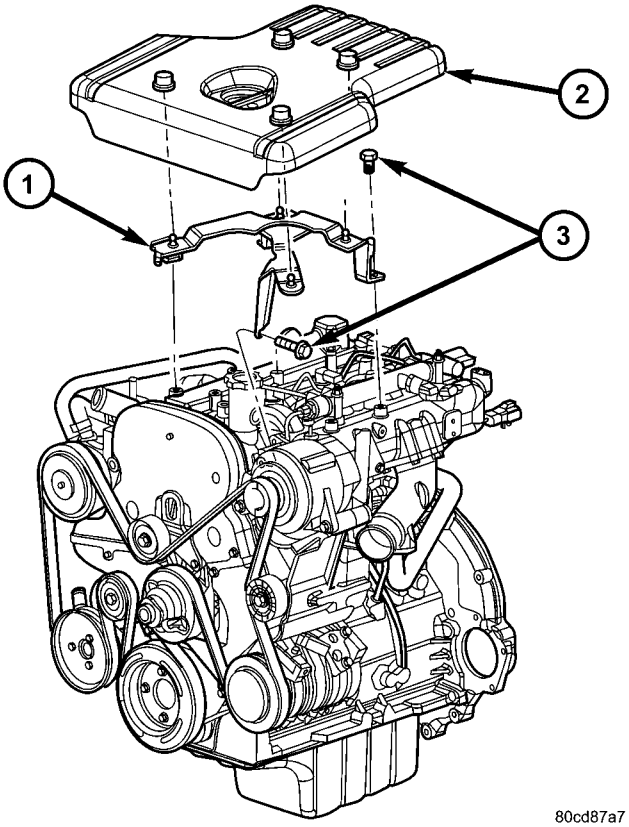

Fig. 2 ENGINE COVER REMOVAL/INSTALLATION

1 - ENGINE COVER BRACKET
2 - ENGINE COVER
3 - RETAINING BOLTS

DIAGNOSIS AND TESTING

ENGINE DIAGNOSIS - MECHANICAL

CONDITION	POSSIBLE CAUSES	CORRECTION
LUBRICATING OIL PRESSURE LOW	1. Low oil level.	1. (a) Check and fill with clean engine oil. (b) Check for a severe external oil leak that could reduce the pressure.
	2. Oil viscosity thin, diluted or wrong specification.	2. (a) Verify the correct engine oil is being used. (b) Look for reduced viscosity from fuel dilution.
	3. Improperly operating pressure switch/gauge.	3. Verify the pressure switch is functioning correctly. If not, replace switch/gauge.
	4. Relief valve stuck open.	4. Check/replace valve.
	5. If cooler was replaced, shipping plugs may have been left in cooler	5. Check/remove shipping plugs.
	6. Worn oil pump.	6. Check and replace oil pump.

2.8L COMMON RAIL DIESEL ENGINE (Continued)

CONDITION	POSSIBLE CAUSES	CORRECTION
	7. Suction tube loose or seal leaking.	7. Check and replace seal.
	8. Loose main bearing cap.	8. Check and install new bearing. Tighten cap to proper torque.
	9. Worn bearings or wrong bearings installed.	9. Inspect and replace connecting rod or main bearings. Check and replace directed piston cooling nozzles.
	10. Directed piston cooling nozzles under piston, bad fit into main carrier.	10. Check directed piston cooling nozzles position.
	11. Loose oil rifle plug with saddle-jet style nozzles	11.Tighten oil rifle plug.
	12. Loose directed piston cooling nozzle.	12. Tighten directed piston cooling nozzle.
LUBRICATING OIL PRESSURE TOO HIGH	1. Pressure switch/gauge not operating properly.	1. Verify pressure switch is functioning correctly. If not, replace switch/gauge.
ENGINE BREATHER RESTRICTED	2. Engine running too cold.	2. Coolant Temperature Below Normal
	3. Oil viscosity too thick.	3. Make sure the correct oil is being used.
	4. Oil pressure relief valve stuck closed or binding	4. Check and replace valve.
LUBRICATING OIL LOSS	1. External leaks.	1. Visually inspect for oil leaks. Repair as required.
	2. Crankcase being overfilled.	2. Verify that the correct dipstick is being used.
	3. Incorrect oil specification or viscosity.	3. (a) Make sure the correct oil is being used. (b) Look for reduced viscosity from dilution with fuel. (c) Review/reduce oil change intervals.
	4. Oil cooler leak	4. Check and replace the oil cooler.
	5. High blow-by forcing oil out the breather.	5. Check the breather tube area for signs of oil loss. Perform the required repairs.
	6. Turbocharger leaking oil to the air intake.	6. Inspect the air ducts for evidence of oil transfer. Repair as required (slight oil residue is normal).
COMPRESSION KNOCKS	1. Air in the fuel system.	1. Identify location of air leak and repair. Do not bleed high pressure fuel system.
	2. Poor quality fuel or water/gasoline contaminated fuel.	2. Verify by operating from a temporary tank with good fuel. Clean and flush the fuel tank. Replace fuel/water separator filter.
	3. Engine overloaded.	3. Verify the engine load rating is not being exceeded.
	4. Improperly operating injectors.	4. Check and replace misfiring/inoperative injectors.

2.8L COMMON RAIL DIESEL ENGINE (Continued)

CONDITION	POSSIBLE CAUSES	CORRECTION
EXCESSIVE VIBRATION	1. Loose or broken engine mounts.	1. Replace engine mounts.
	2. Damaged fan or improperly operating accessories.	2. Check and replace the vibrating components.
	3. Improperly operating vibration damper	3. Inspect/replace vibration damper.
	4. Improperly operating balance shaft	4. Inspect/replace balance shaft.
	5. Improperly operating electronically controlled viscous fan drive.	5. Inspect/replace fan drive.
	6. Worn or damaged generator bearing.	6. Check/replace generator.
	7. Flywheel housing misaligned.	7. Check/correct flywheel alignment.
	8. Loose or broken power component.	8. Inspect the crankshaft and rods for damage that causes an unbalance condition. Repair/replace as required.
	9. Worn or unbalanced driveline components.	9. Check/repair driveline components.
EXCESSIVE ENGINE NOISES	1. Drive belt squeal, insufficient tension or abnormally high loading.	1. Check the automatic tensioner and inspect the drive belt. Make sure water pump, tensioner pulley, fan hub, generator and power steering pump turn freely.
	2. Intake air or exhaust leaks.	2. Refer to Excessive Exhaust Smoke (Refer to 9 - ENGINE - DIAGNOSIS AND TESTING).
	3. Excessive valve lash.	3. Adjust valves. Make sure the rocker arms are not bent. Replace bent or severely worn components.
	4. Turbocharger noise.	4. Check turbocharger impeller and turbine wheel for housing contact. Repair/replace as required.
	5. Gear train noise.	5. Visually inspect and measure gear backlash. Replace gears as required.
	6. Power function knock.	6. Check/replace rod and main bearings.

2.8L COMMON RAIL DIESEL ENGINE (Continued)

SMOKE DIAGNOSIS CHARTS

The following charts include possible causes and corrections for **excess or abnormal** exhaust smoke. Small amounts of exhaust smoke (at certain times) are to be considered normal for a diesel powered engine.

EXCESSIVE BLACK SMOKE	
POSSIBLE CAUSE	**CORRECTION**
Air filter dirty or plugged.	Check and/or replace filter
Air intake system restricted.	Check entire air intake system including all hoses and tubes for restrictions, collapsed parts or damage. Repair/replace as necessary.
Air Leak in Intake System.	Check entire air intake system including all hoses and tubes for collapse, cracks, loose clamps and/or holes in rubber ducts. Also check intake manifold for loose mounting hardware.
Diagnostic Trouble Codes (DTC's) active or multiple, intermittent DTC's.	Refer to Powertrain Diagnostic Procedures Information.
Engine Control Module (ECM) not calibrated or ECM has incorrect calibration.	Refer to Powertrain Diagnostic Procedures Information.
Exhaust system restriction is above specifications.	Check exhaust pipes for damage/restrictions. Repair as necessary.
Fuel grade is not correct or fuel quality is poor.	Temporarily change fuel brands and note condition. Change brand if necessary.
Fuel injection pump malfunctioning.	A DTC may have been set. If so, refer to Powertrain Diagnostic Procedures Information.
Fuel injector malfunctioning.	A DTC may have been set. Perform "Injector Classification Programming" using scan tool. Also refer to Powertrain Diagnostic Procedures Information and, Return Fuel Quantity Test.
Fuel injector lower washer doubled or missing.	Remove and inspect injector washer.
Fuel return system restricted.	Check fuel return lines for restriction.
Intake manifold restricted.	Remove restriction.
Manifold Air Pressure (Boost) Sensor or sensor circuit malfunctioning.	A DTC should have been set. Refer to Powertrain Diagnostic Procedures Information.
Raw fuel in intake manifold.	Fuel injectors leaking on engine shutdown.
Turbocharger air intake restriction.	Remove restriction.
Turbocharger damaged.	Refer to Exhaust and Turbochanger Diagnostic Procedures
Turbocharger has excess build up on compressor wheel and/or diffuser vanes.	Refer to Exhaust and Turbochanger Diagnostic Procedures
Turbocharger wheel clearance out of specification.	Refer to Exhaust and Turbochanger Diagnostic Procedures

2.8L COMMON RAIL DIESEL ENGINE (Continued)

EXCESSIVE WHITE SMOKE	
POSSIBLE CAUSE	**CORRECTION**
Air in fuel supply: Possible leak in fuel supply side.	Inspect fuel system
Coolant leaking into combustion chamber.	Perform pressure test of cooling system.
Diagnostic Trouble Codes (DTC's) active or multiple, intermittent DTC's.	Refer to Powertrain Diagnostic Procedures Information.
In very cold ambient temperatures, engine block heater is malfunctioning (if equipped).	Refer to In-Block Heater
Engine coolant temperature sensor malfunctioning.	A DTC should have been set. Refer to Powertrain Diagnostic Procedures Information. Also check thermostat operation.
Engine Control Module (ECM) not calibrated or has incorrect calibration.	A DTC should have been set. Refer to Powertrain Diagnostic Procedures Information.
Fuel filter plugged.	Refer to Powertrain Diagnostic Manual for fuel system testing.
Fuel grade not correct or fuel quality is poor.	Temporarily change fuel brands and note condition. Change brand if necessary.
Fuel heater element or fuel heater temperature sensor malfunctioning. This will cause wax type build-up in fuel filter.	Refer to Fuel Heater Testing (Refer to 14 - FUEL SYSTEM/FUEL DELIVERY/FUEL HEATER - DIAGNOSIS AND TESTING).
Fuel injector malfunctioning.	A DTC should have been set. Perform "Injector Identification Programming" or "Cylinder Cutout Test" using scan tool to isolate individual cylinders. Also refer to Powertrain Diagnostic Procedures Information.
Fuel injector hold-down(s) loose.	Replace the copper washer(s)(shim) and torque to specifications.
Fuel injector protrusion not correct.	Check washer (shim) at bottom of fuel injector for correct thickness.
Fuel injection pump malfunctioning.	A DTC should have been set. Refer to Powertrain Diagnostic Procedures Information.
Fuel supply side restriction.	Refer to Powertrain Diagnostic Manual for fuel system testing.
Intake manifold air temperature sensor malfunctioning.	A DTC should have been set. Refer to Powertrain Diagnostic Procedures Information.
Intake manifold heater circuit not functioning correctly in cold weather.	A DTC should have been set. Refer to Powertrain Diagnostic Procedures Information. Also check heater elements for correct operation.
Intake manifold heater elements not functioning correctly in cold weather.	A DTC should have been set if heater elements are malfunctioning. Refer to Powertrain Diagnostic Procedures Information.
Internal engine damage (scuffed cylinder).	Analyze engine oil and inspect oil filter to locate area of probable damage.
Restriction in fuel supply side of fuel system.	Refer to Powertrain Diagnostic Manual for fuel system testing.

2.8L COMMON RAIL DIESEL ENGINE (Continued)

EXCESSIVE BLUE SMOKE	
POSSIBLE CAUSE	**CORRECTION**
Dirty air cleaner or restricted turbocharger intake duct.	Check Air Cleaner Housing for debris and replace filter as necessary
Air leak in boost system between turbocharger compressor outlet and intake manifold.	Service charge air system.
Obstruction in exhaust manifold.	Remove exhaust manifold and inspect for blockage.
Restricted turbocharger drain tube.	Remove turbocharger drain tube and remove obstruction.
Crankcase ventilation system plugged.	Inspect oil separator system for function and clear drain back hole in cylinder head cover/intake manifold
Valve seals are worn, brittle, or improperly installed.	Replace valve stem oil seals
Valve stems and/or guides are worn.	Remove valves and inspect valves and guides.
Broken or Improperly installed piston rings.	Tear down engine and inspect piston rings.
Excessive piston ring end gap.	Remove pistons and measure piston ring end gap.
Excessive cylinder liner wear and taper.	Remove pistons and measure cylinder liner wear and taper.
Cylinder damage.	Remove pistons and inspect cylinder liner for cracks or porosity. Repair with new cylinder liner if necessary.
Piston damage.	Remove pistons and inspect for cracks, holes. Measure piston for out-of-round and taper.
Turbocharger failure.	Refer to Exhaust and Turbocharger Procedures

STANDARD PROCEDURE

FORM-IN-PLACE GASKETS AND SEALERS

There are numerous places where form-in-place gaskets are used on the engine. Care must be taken when applying form-in-place gaskets to assure obtaining the desired results. **Do not use form-in-place gasket material unless specified.** Bead size, continuity, and location are of great importance. Too thin a bead can result in leakage while too much can result in spill-over which can break off and obstruct fluid feed lines. A continuous bead of the proper width is essential to obtain a leak-free gasket.

There are numerous types of form-in-place gasket materials that are used in the engine area. Mopar® Engine RTV GEN II, Mopar® ATF-RTV, and Mopar® Gasket Maker gasket materials, each have different properties and can not be used in place of the other.

MOPAR® ENGINE RTV GEN II

Mopar® Engine RTV GEN II is used to seal components exposed to engine oil. This material is a specially designed black silicone rubber RTV that retains adhesion and sealing properties when exposed to engine oil. Moisture in the air causes the material to cure. This material is available in three ounce tubes and has a shelf life of one year. After one year this material will not properly cure. Always inspect the package for the expiration date before use.

MOPAR® ATF RTV

Mopar® ATF RTV is a specifically designed black silicone rubber RTV that retains adhesion and sealing properties to seal components exposed to automatic transmission fluid, engine coolants, and moisture. This material is available in three ounce tubes and has a shelf life of one year. After one year this material will not properly cure. Always inspect the package for the expiration date before use.

MOPAR® GASKET MAKER

Mopar® Gasket Maker is an anaerobic type gasket material. The material cures in the absence of air when squeezed between two metallic surfaces. It will not cure if left in the uncovered tube. The anaerobic material is for use between two machined surfaces. Do not use on flexible metal flanges.

MOPAR® GASKET SEALANT

Mopar® Gasket Sealant is a slow drying, permanently soft sealer. This material is recommended for sealing threaded fittings and gaskets against leakage of oil and coolant. Can be used on threaded and machined parts under all temperatures. This material is used on engines with multi-layer steel (MLS) cylinder head gaskets. This material also will prevent corrosion. Mopar® Gasket Sealant is available in a 13 oz. aerosol can or 4oz./16 oz. can w/applicator.

FORM-IN-PLACE GASKET AND SEALER APPLICATION

Assembling parts using a form-in-place gasket requires care but it's easier than using precut gaskets.

Mopar® Gasket Maker material should be applied sparingly 1 mm (0.040 in.) diameter or less of sealant to one gasket surface. Be certain the material surrounds each mounting hole. Excess material can easily be wiped off. Components should be torqued in place within 15 minutes. The use of a locating dowel is recommended during assembly to prevent smearing material off the location.

Mopar® Engine RTV GEN II or ATF RTV gasket material should be applied in a continuous bead approximately 3 mm (0.120 in.) in diameter. All mounting holes must be circled. For corner sealing, a 3.17 or 6.35 mm (1/8 or 1/4 in.) drop is placed in the center of the gasket contact area. Uncured sealant may be removed with a shop towel. Components should be torqued in place while the sealant is still wet to the touch (within 10 minutes). The usage of a locating dowel is recommended during assembly to prevent smearing material off the location.

Mopar® Gasket Sealant in an aerosol can should be applied using a thin, even coat sprayed completely over both surfaces to be joined, and both sides of a gasket. Then proceed with assembly. Material in a can w/applicator can be brushed on evenly over the sealing surfaces. Material in an aerosol can should be used on engines with multi-layer steel gaskets.

REPAIR DAMAGED OR WORN THREADS

CAUTION: Be sure that the tapped holes maintain the original center line.

Damaged or worn threads can be repaired. Essentially, this repair consists of:

- Drilling out worn or damaged threads.
- Tapping the hole with a special Heli-Coil Tap, or equivalent.
- Installing an insert into the tapped hole to bring the hole back to its original thread size.

HYDROSTATIC LOCK

CAUTION: DO NOT use the starter motor to rotate the crankshaft. Severe damage could occur.

When an engine is suspected of hydrostatic lock (regardless of what caused the problem), follow the steps below.

(1) Disconnect the negative cable(s) from the battery.

(2) Inspect air cleaner, induction system, and intake manifold to ensure system is dry and clear of foreign material.

(3) Place a shop towel around the fuel injectors to catch any fluid that may possibly be under pressure in the cylinder head. Remove the fuel injectors (Refer to 14 - FUEL SYSTEM/FUEL INJECTION/FUEL INJECTOR - REMOVAL).

CAUTION: DO NOT use the starter motor to rotate the crankshaft. Severe damage could occur.

(4) With all injectors removed, rotate the crankshaft using the crankshaft.

(5) Identify the fluid in the cylinders (coolant, fuel, oil, etc.).

(6) Be sure all fluid has been removed from the cylinders.

(7) Repair engine or components as necessary to prevent this problem from occurring again.

(8) Squirt a small amount of engine oil into the cylinders to lubricate the walls. This will prevent damage on restart.

(9) Install fuel injectors (Refer to 14 - FUEL SYSTEM/FUEL INJECTION/FUEL INJECTOR - INSTALLATION).

(10) Drain engine oil. Remove and discard the oil filter.

(11) Install the drain plug. Tighten the plug to 50 N·m (37 ft. lbs.) torque.

(12) Install a new oil filter and tighten to 10 N·m 88 in. lbs.) torque.

(13) Fill engine crankcase with the specified amount and grade of oil (Refer to LUBRICATION & MAINTENANCE/FLUID TYPES - SPECIFICATIONS).

(14) Connect the negative cable(s) to the battery.

(15) Start the engine, allow to warm, turn engine off and check for any leaks. (Refer to 14 - FUEL SYSTEM - WARNING).

REMOVAL

2.8L COMMON RAIL DIESEL ENGINE

(1) Disconnect negative battery cable.

(2) Drain cooling system (Refer to 7 - COOLING/ENGINE/COOLANT - STANDARD PROCEDURE).

(3) Remove engine cover (Refer to 9 - ENGINE - REMOVAL).

(4) Remove engine cover mounting bracket retaining bolts and remove the bracket from the top of the engine.

(5) Remove air cleaner assembly from the engine bay.

2.8L COMMON RAIL DIESEL ENGINE (Continued)

(6) Recover refrigerant from A/C system (Refer to 24 - HEATING & AIR CONDITIONING/PLUMBING - STANDARD PROCEDURE).

(7) Disconnect high side refrigerant line from the upper radiator support bracket.

(8) Remove upper radiator support bracket retaining bolts and remove the support bracket.

(9) Remove front grille and head lamp panel (Refer to 23 - BODY/EXTERIOR/GRILLE OPENING REINFORCEMENT - REMOVAL).

(10) Remove high side refrigerant line retaining nut and remove the line from the condenser assembly. Position the line out of the way.

(11) Remove low side refrigerant line retaining nut and remove line from the condenser assembly. Position the line out of the way.

(12) Remove high side refrigerant line from A/C compressor and remove high side line.

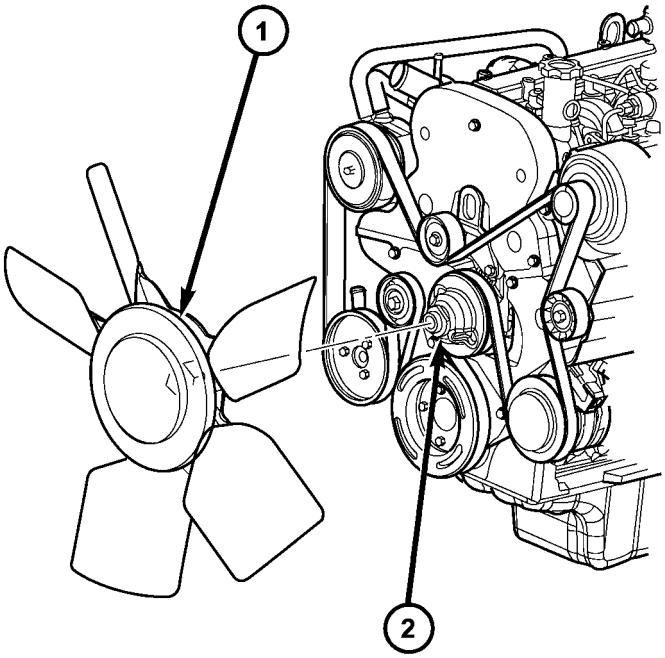

80cda6e4

Fig. 3 COOLING FAN AND VISCOUS CLUTCH

1 - COOLING FAN AND FAN DRIVE VISCOUS CLUTCH ASSEMBLY
2 - FAN SUPPORT

(13) Remove cooling fan and fan drive viscous clutch assembly (Fig. 3).

(14) Remove fan shroud retaining bolts and remove fan assembly and shroud together.

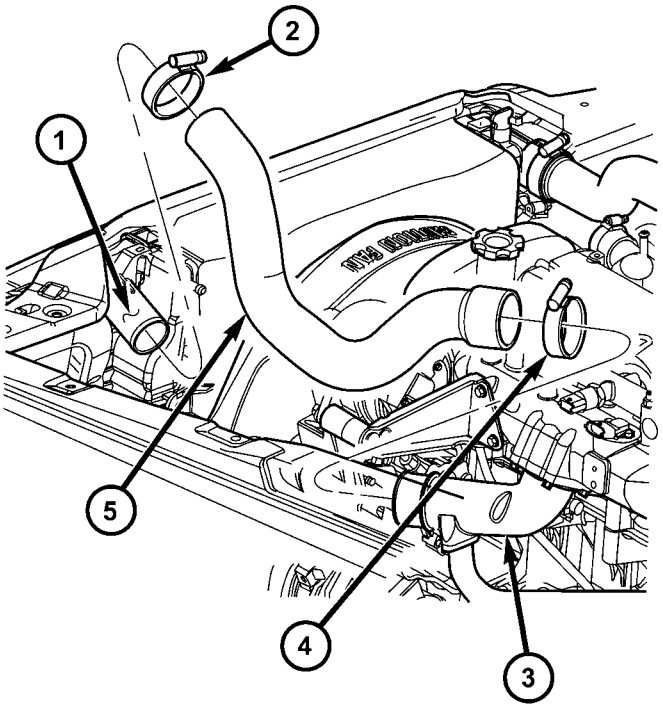

80cdb957

Fig. 4 CHARGE AIR COOLER OUTLET HOSE

1 - CHARGE AIR COOLER
2 - HOSE CLAMP
3 - INTAKE MANIFOLD INLET
4 - HOSE CLAMP
5 - CHARGE AIR COOLER OUTLET HOSE

(15) Disconnect charge air cooler outlet hose from charge air cooler (Fig. 4).

2.8L COMMON RAIL DIESEL ENGINE (Continued)

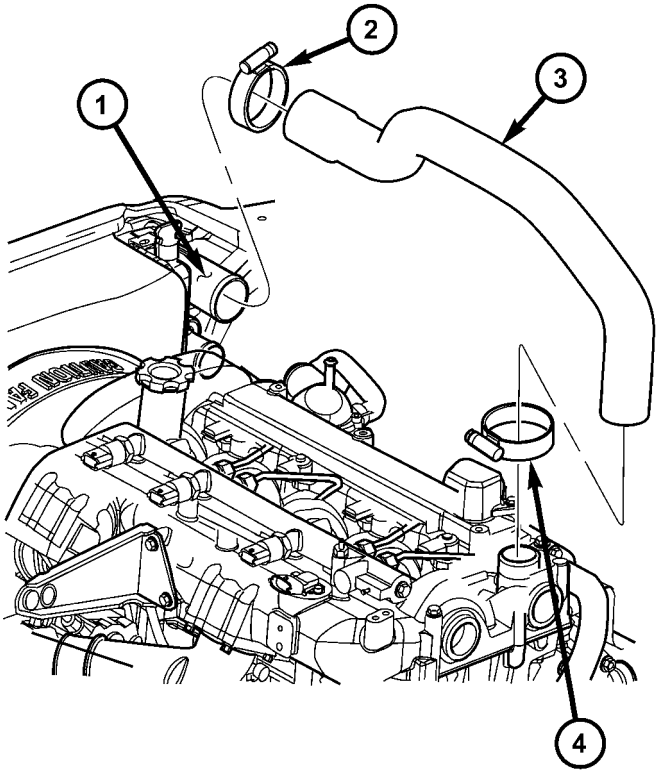

Fig. 5 CHARGE AIR COOLER INLET HOSE

1 - CHARGE AIR COOLER
2 - HOSE CLAMP
3 - CHARGE AIR COOLER INLET HOSE
4 - HOSE CLAMP

(16) Remove the charge air inlet hose from the charge air cooler (Fig. 5).

(17) Disconnect engine coolant hoses from engine assembly.

(18) Disconnect coolant reservoir hoses and remove reservior. (Fig. 6).

(19) Remove power steering cooler retaining bolts and unclip air deflectors from both sides of the radiator (cooling module) assembly.

(20) Remove cooling module assembly (Fig. 7).

(21) Remove accessory drive belt from the engine (Refer to 7 - COOLING/ACCESSORY DRIVE/DRIVE BELTS - REMOVAL).

(22) Accessing bolts through the pump pulley, remove power steering pump retaining bolts and position pump aside with lines still attached.

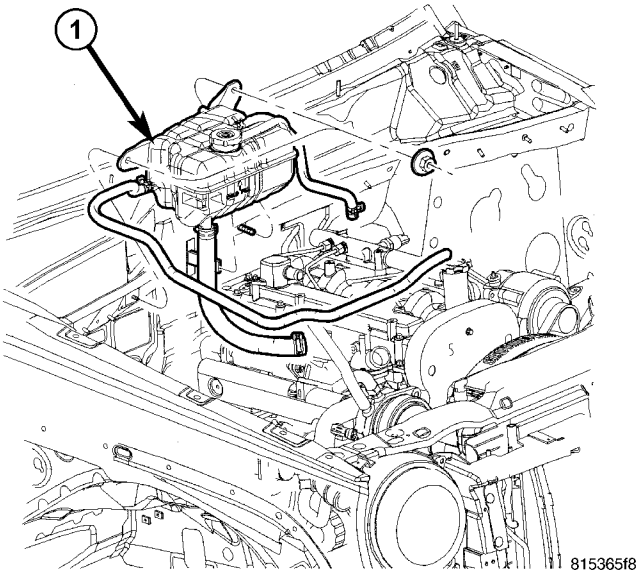

Fig. 6 COOLANT RESERVOIR

1 - COOLANT RESERVOIR

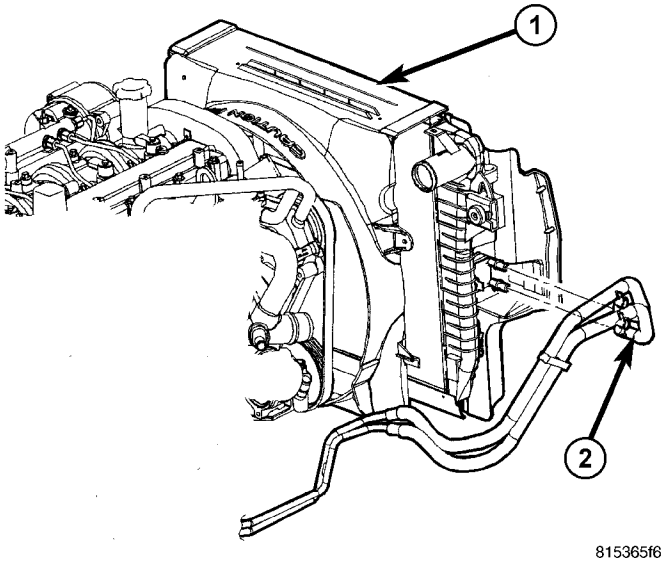

Fig. 7 COOLING MODULE

1 - COOLING MODULE
2 - TRANSMISSION LINES

2.8L COMMON RAIL DIESEL ENGINE (Continued)

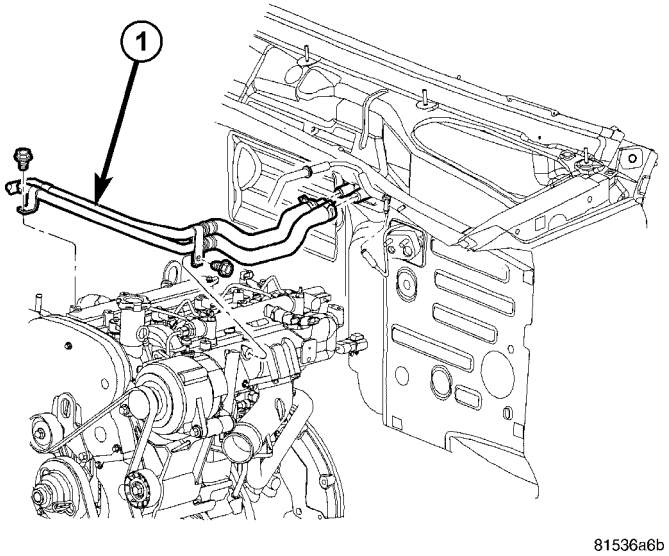

Fig. 8 HEATER HOSES

1- HEATER HOSES

(23) Disconnect heater core inlet and outlet hoses from the heater core (Fig. 8).

(24) Remove generator from engine (Refer to 8 - ELECTRICAL/CHARGING/GENERATOR - REMOVAL). This will provide access to the wires beneath it.

(25) Trace engine wiring and disconnect electrical connectors and tie straps one at a time until all wiring is disconnected from the engine assembly. When all the engine electrical harness is disconnected, separate the main engine wiring harness connectors at the right rear inner fender well then position the harness aside.

(26) Raise and support the vehicle.

(27) Remove the skid plate (Fig. 9).

(28) Disconnect the oil sending unit.

(29) Remove starter motor from engine (Refer to 8 - ELECTRICAL/STARTING/STARTER MOTOR - REMOVAL).

(30) Remove chassis ground wire above starter mounting location on the engine block.

NOTE: For vehicles with manual transmission, remove the transmission.

(31) Support the transmission with a jackstand.

(32) Remove the flex plate access cover.

(33) Remove the flex plate fasteners.

(34) Remove transmission cross member fasteners (Fig. 10).

(35) Lower the transmission.

(36) Remove the upper transmission to engine fasteners.

(37) Raise the transmission.

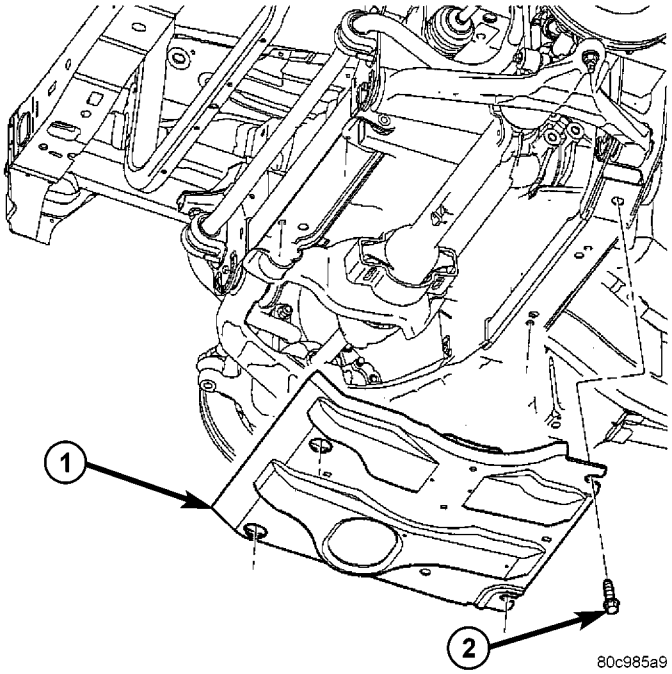

Fig. 9 SKID PLATE

1 - SKID PLATE
2 - BOLTS (4)

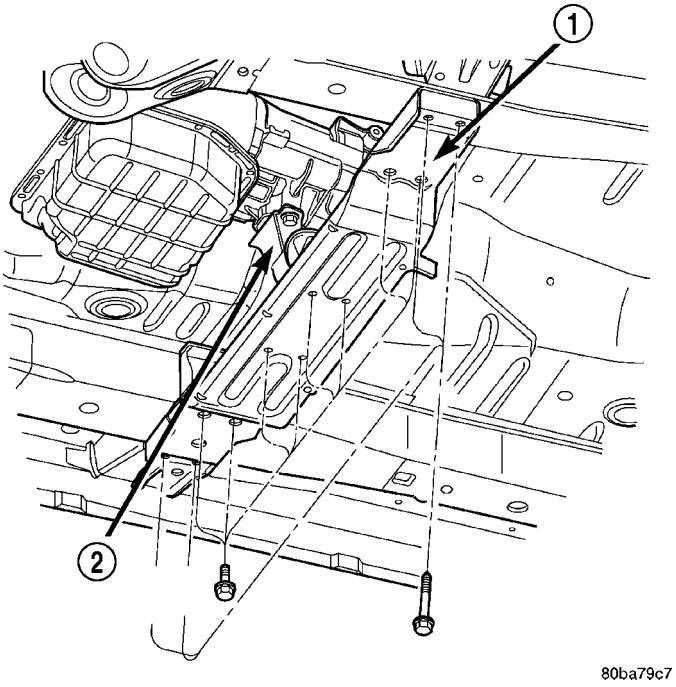

Fig. 10 Rear Transmission Crossmember

1 - CROSSMEMBER
2 - REAR TRANSMISSION MOUNT

(38) Install the transmission cross member fasteners (Fig. 10).

(39) Remove the transmission jack.

2.8L COMMON RAIL DIESEL ENGINE (Continued)

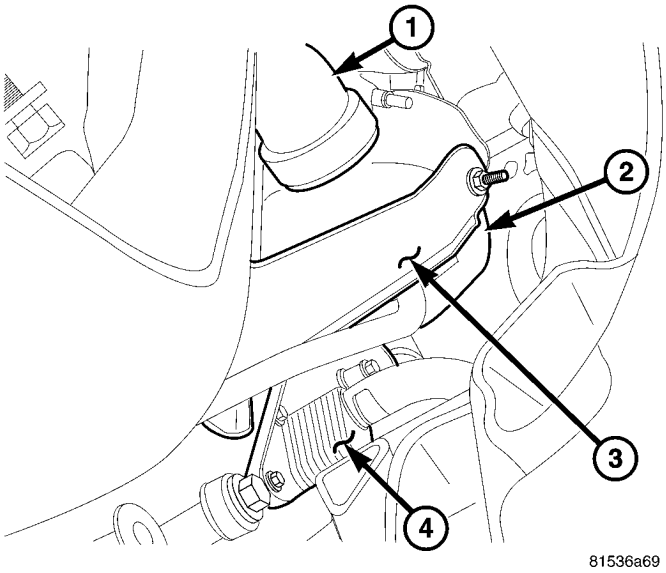

Fig. 11 EXHAUST AT TURBO

1 - EXHAUST PIPE
2 - TURBOCHARGER
3 - BRACKET
4 - ENGINE OIL COOLER

(40) Remove exhaust inlet pipe retaining bolts and disconnect exhaust pipe from turbocharger (Fig. 11).

(41) Remove transmission to engine retaining bolts.

(42) Separate transmission cooler line(s) from retainer.

(43) Remove both right and left side engine mount retaining nut.

(44) Lower vehicle.

(45) Remove left side engine mount retaining nut.

(46) Remove exhaust manifold rear heat shield.

(47) Disconnect the fuel supply and return lines.

(48) Remove crankshaft sensor heat shield.

(49) Disconnect crankshaft position sensor, located on the right rear of the engine (Fig. 12).

(50) Remove the oil separator from the cylinder head cover/intake manifold (Fig. 13).

(51) Connect a suitable lifting device to engine assembly.

(52) Place a floor jack under the transmission to support the transmission.

(53) With engine and transmission supported by a lifting device separate the engine from the transmission.

(54) Lift the engine assembly out of the engine bay (Fig. 14).

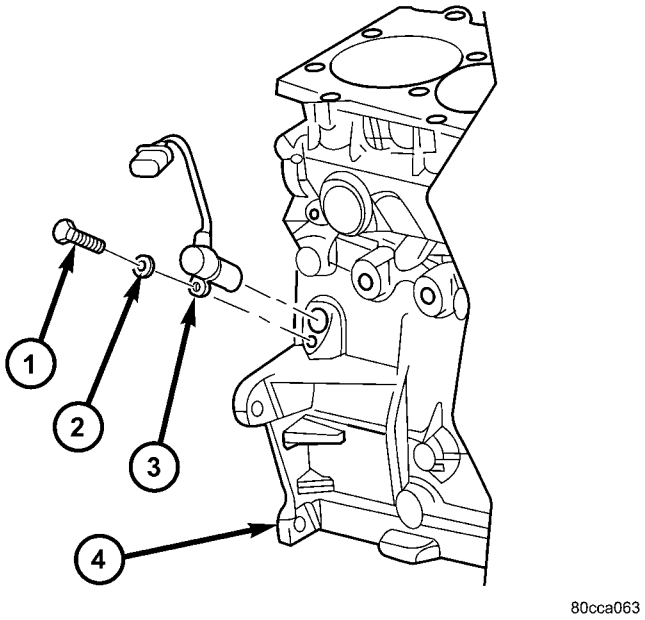

Fig. 12 CRANKSHAFT POSITION (CKP) SENSOR REMOVAL/INSTALL

1 - RETAINING BOLT
2 - WASHER
3 - CRANKSHAFT POSITION (CKP) SENSOR
4 - ENGINE BLOCK

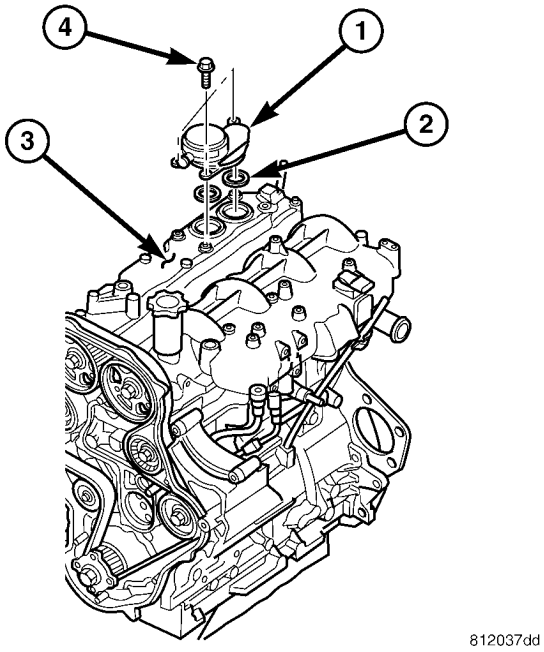

Fig. 13 OIL SEPARATOR

1 - OIL SEPARATOR
2 - O-RING(S)
3 - CYLINDER HEAD COVER
4 - BOLT (S)

2.8L COMMON RAIL DIESEL ENGINE (Continued)

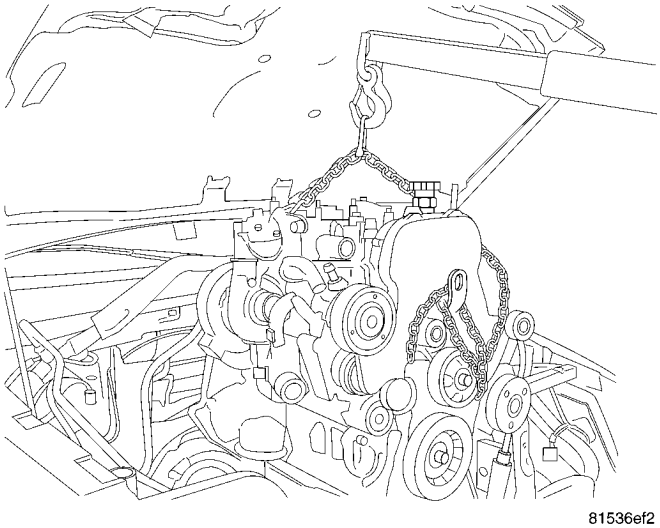

Fig. 14 ENGINE HOIST

ENGINE COVER

(1) Remove oil fill cap.

(2) Carefully lift engine engine cover from corners to remove from mounting bracket (Fig. 15).

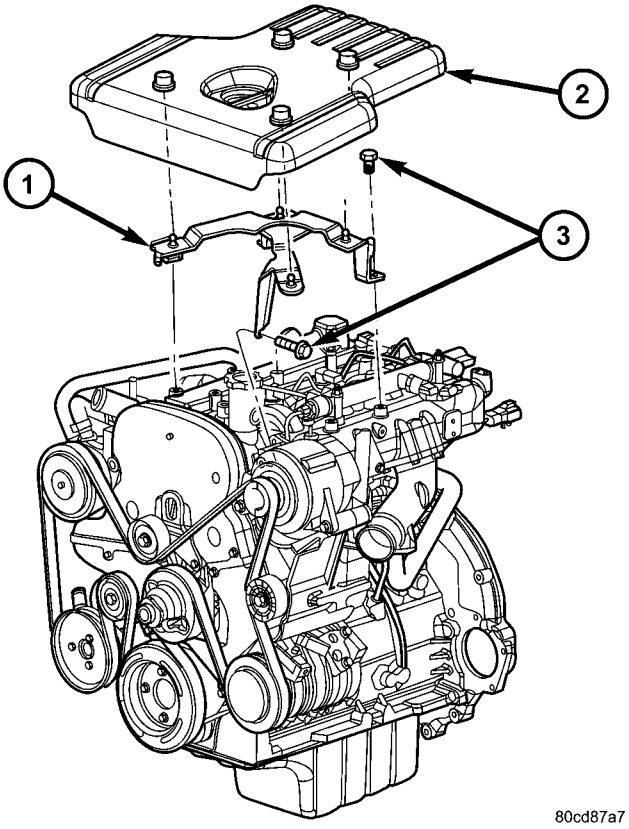

Fig. 15 ENGINE COVER REMOVAL/INSTALLATION

1 - ENGINE COVER BRACKET
2 - ENGINE COVER
3 - RETAINING BOLTS

INSTALLATION

2.8L COMMON RAIL DIESEL ENGINE

(1) Install engine assembly and align with the transmission (Fig. 16).

NOTE: For vehicle equipped with a manual transmission, Install the transmission.

(2) Remove engine lifting devise.

(3) Raise and support the vehicle.

(4) Install accessible engine to transmission housing bolts. Tighten bolts to 68 N·m (50 ft. lbs.).

(5) Install the engine mount fasteners (Refer to 9 - ENGINE/ENGINE MOUNTING/LEFT MOUNT - INSTALLATION), (Refer to 9 - ENGINE/ENGINE MOUNTING/RIGHT MOUNT - INSTALLATION).

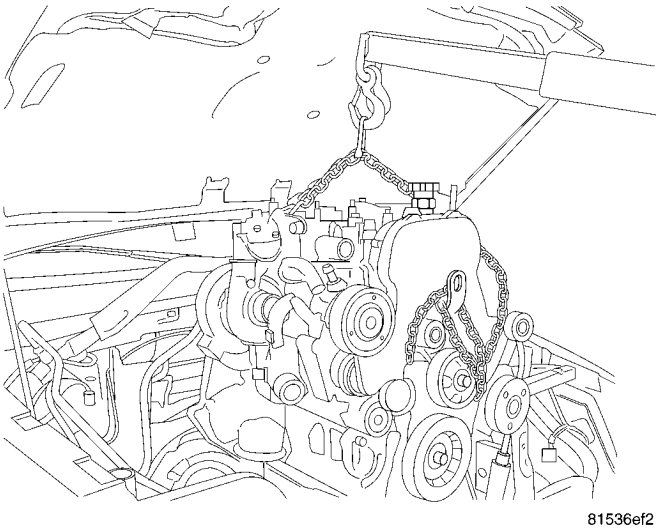

Fig. 16 ENGINE HOIST

2.8L COMMON RAIL DIESEL ENGINE (Continued)

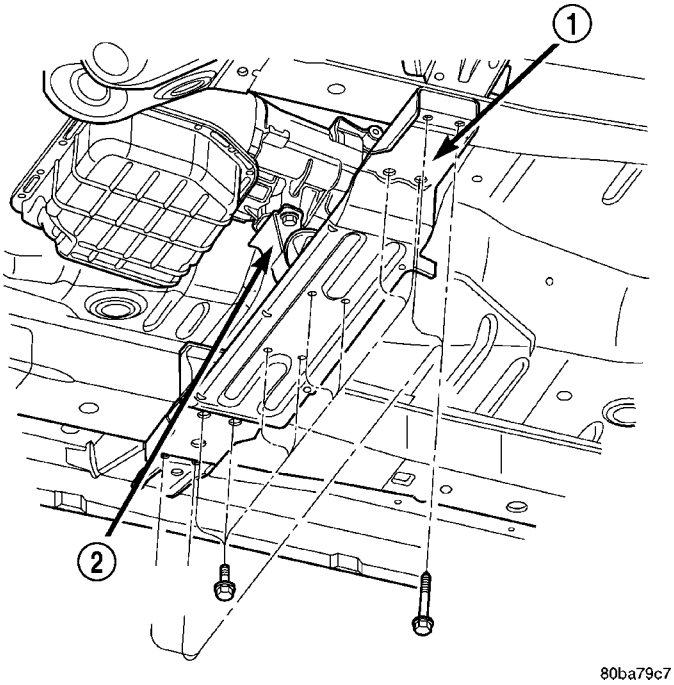

Fig. 17 Rear Transmission Crossmember

1 - CROSSMEMBER
2 - REAR TRANSMISSION MOUNT

(6) Support the transmission and remove the rear transmission crossmember (Fig. 17).

(7) Lower the transmission and install the upper transmission to engine fasteners. Tighten bolts to 68 N·m (50 ft. lbs.).

(8) Raise the transmission and install the transmission crossmember.

(9) Install the flex plate to torque converter fasteners and install the shield (Refer to 21 - TRANSMISSION/TRANSAXLE/AUTOMATIC - 45RFE/545RFE - INSTALLATION).

(10) Install the engine ground wire above the starter.

(11) Install the starter.

(12) Connect the transmission cooler lines to the oil pan retainers.

(13) Connect the exhaust (Fig. 18).

(14) Lower the vehicle.

(15) Install the oil separator (Fig. 19).

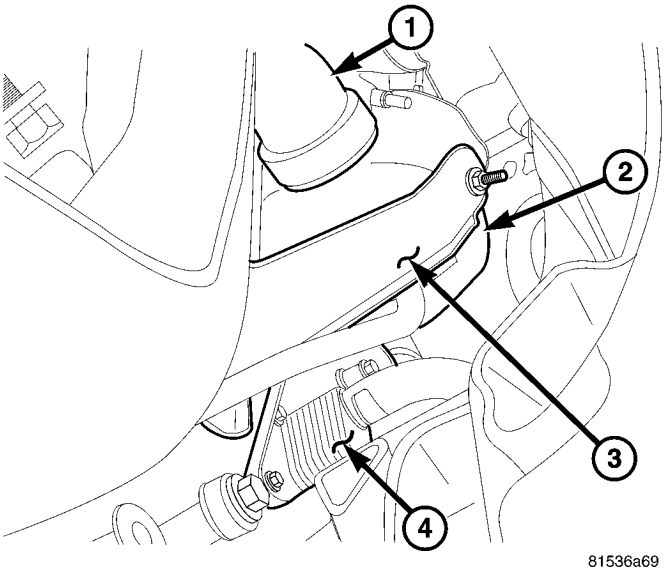

Fig. 18 EXHAUST AT TURBO

1 - EXHAUST PIPE
2 - TURBOCHARGER
3 - BRACKET
4 - ENGINE OIL COOLER

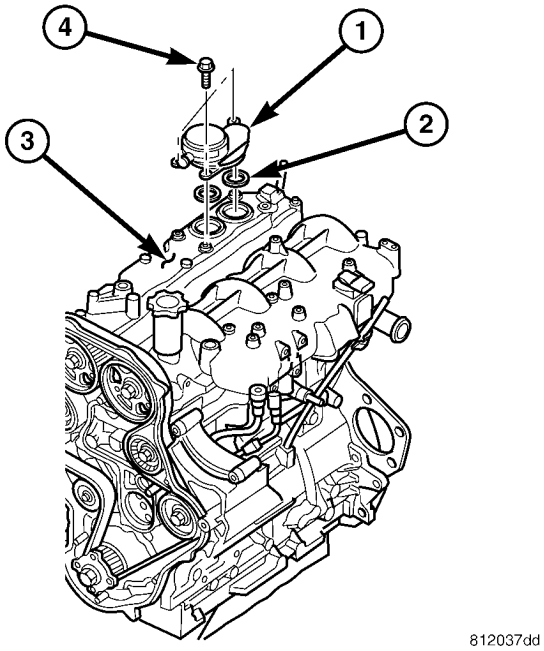

Fig. 19 OIL SEPARATOR

1 - OIL SEPARATOR
2 - O-RING(S)
3 - CYLINDER HEAD COVER
4 - BOLT (S)

2.8L COMMON RAIL DIESEL ENGINE (Continued)

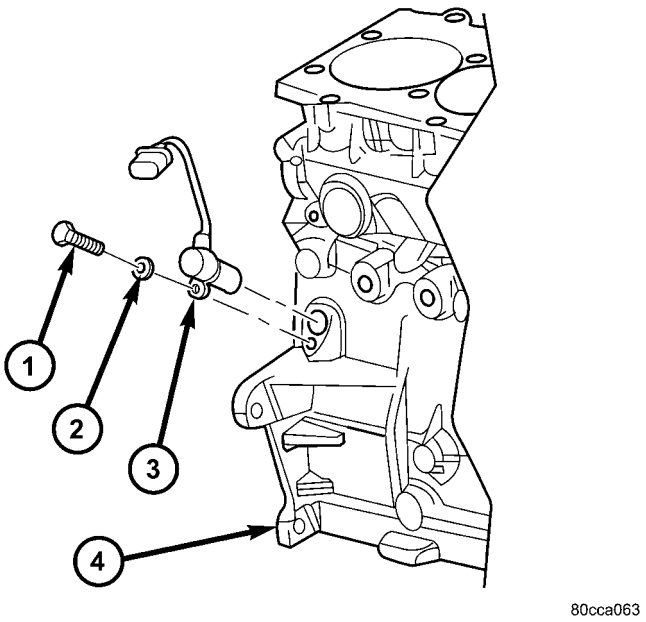

Fig. 20 CRANKSHAFT POSITION (CKP) SENSOR REMOVAL/INSTALL

1 - RETAINING BOLT
2 - WASHER
3 - CRANKSHAFT POSITION (CKP) SENSOR
4 - ENGINE BLOCK

(16) Connect the crankshaft sensor and install the heat shield (Fig. 20).

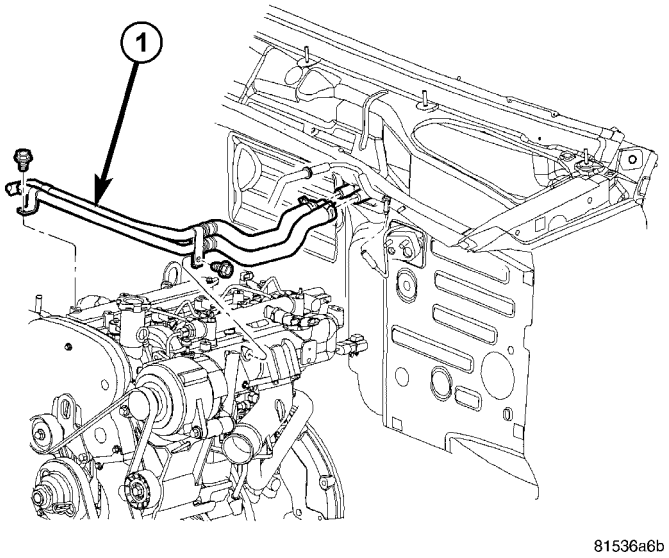

Fig. 21 HEATER HOSES

1- HEATER HOSES

(17) Connect the heater hose inlet and out let hoses (Fig. 21).

(18) Install the power steering pump.

(19) Install the generator (Refer to 8 - ELECTRICAL/CHARGING/GENERATOR - INSTALLATION).

(20) Connect the fuel lines.

(21) Position and connect the main engine wiring harness.

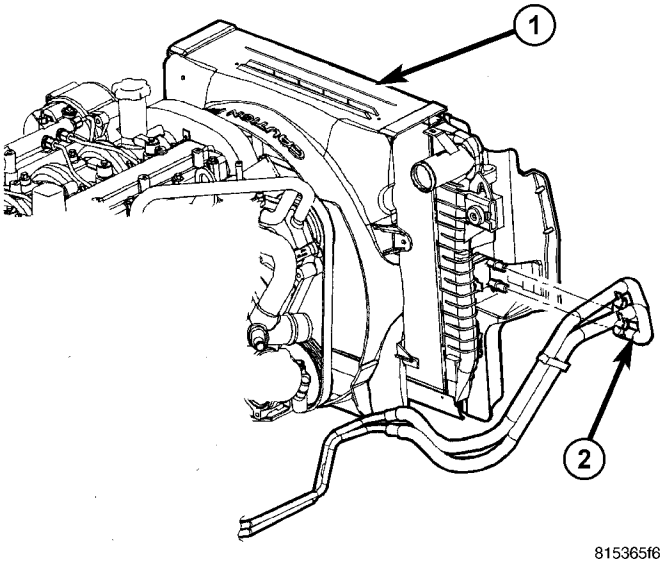

Fig. 22 COOLING MODULE

1 - COOLING MODULE
2 - TRANSMISSION LINES

(22) Install the accessory drive belt (Refer to 7 - COOLING/ACCESSORY DRIVE/DRIVE BELTS - INSTALLATION).

(23) Install the cooling module (Fig. 22).

(24) Connect the power steering cooler and fasten the air deflectors.

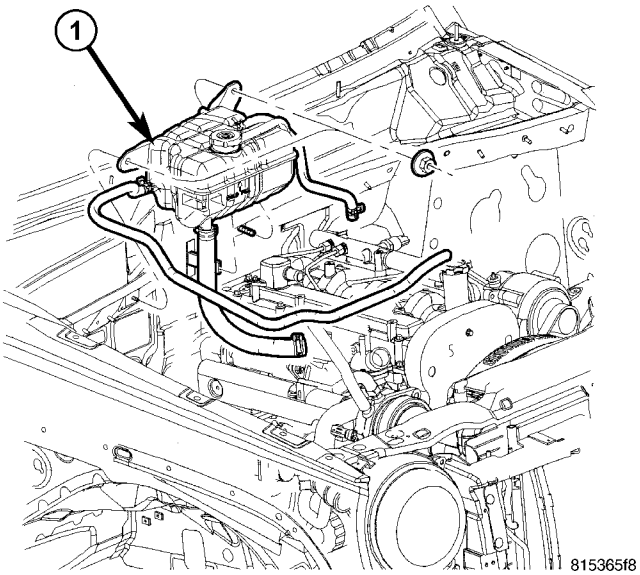

Fig. 23 COOLANT RESERVOIR

1 - COOLANT RESERVOIR

(25) Install the coolant reservoir (Fig. 23).

(26) Connect the engine coolant hoses.

2.8L COMMON RAIL DIESEL ENGINE (Continued)

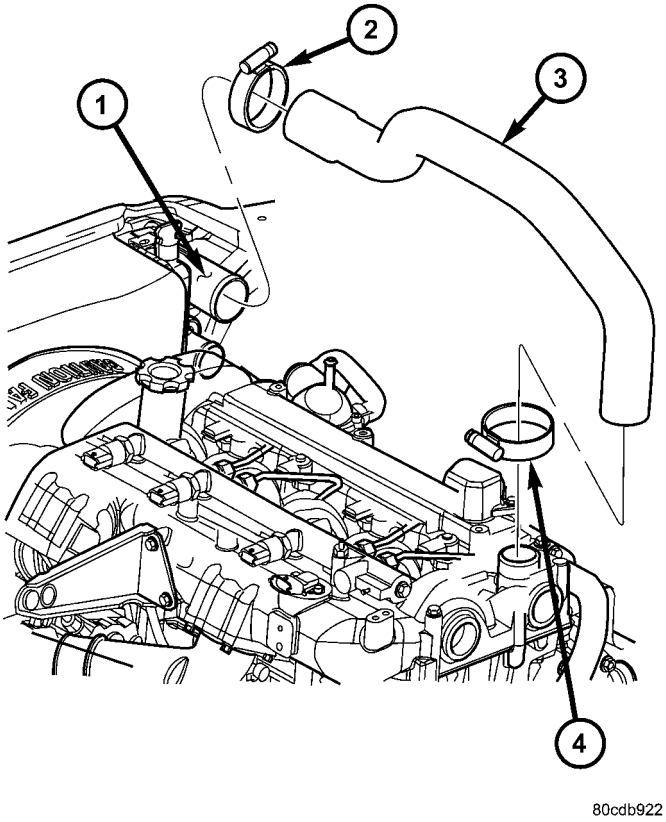

Fig. 24 CHARGE AIR COOLER INLET HOSE

1 - CHARGE AIR COOLER
2 - HOSE CLAMP
3 - CHARGE AIR COOLER INLET HOSE
4 - HOSE CLAMP

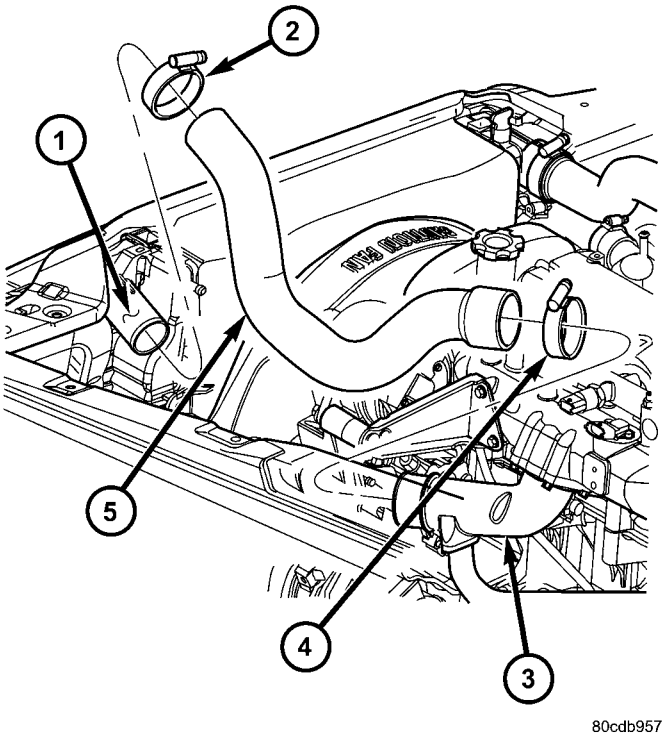

Fig. 25 CHARGE AIR COOLER OUTLET HOSE

1 - CHARGE AIR COOLER
2 - HOSE CLAMP
3 - INTAKE MANIFOLD INLET
4 - HOSE CLAMP
5 - CHARGE AIR COOLER OUTLET HOSE

(27) Connect the charge air inlet hose (Fig. 24).

(28) Connect the charge air outlet hose (Fig. 25).

(29) Install the cooling fan assembly and shroud (Fig. 26).

(30) Install high side refrigerant line.

(31) Install the low side refrigerant line.

(32) Install the front grille and head lamp panel.

(33) Install the upper radiator support bracket.

(34) Install the air cleaner assembly.

(35) Install the engine cover bracket and engine cover (Refer to 9 - ENGINE COVER - REMOVAL).

(36) Evacuate and recharge A/C (Refer to 24 - HEATING & AIR CONDITIONING/PLUMBING - STANDARD PROCEDURE).

(37) Fill cooling system (Refer to 7 - COOLING/ENGINE/COOLANT - STANDARD PROCEDURE).

(38) Fill crankcase with the correct viscosity oil, to the proper level (Refer to LUBRICATION & MAINTENANCE/FLUID TYPES - DESCRIPTION), (Refer to LUBRICATION & MAINTENANCE/FLUID TYPES - SPECIFICATIONS).

(39) Start engine, allow to warm, turn engine off and inspect for leaks (Refer to 14 - FUEL SYSTEM/FUEL DELIVERY - WARNING).

2.8L COMMON RAIL DIESEL ENGINE (Continued)

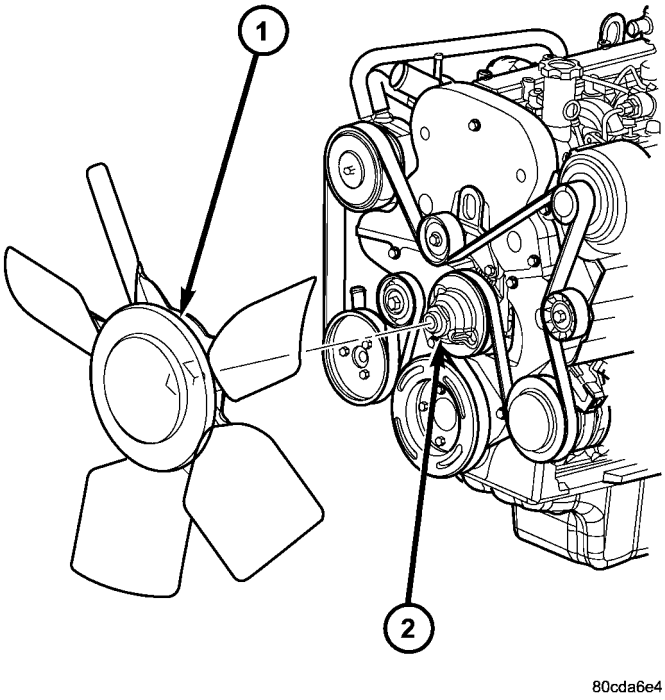

Fig. 26 COOLING FAN AND VISCOUS CLUTCH

1 - COOLING FAN AND FAN DRIVE VISCOUS CLUTCH ASSEMBLY
2 - FAN SUPPORT

ENGINE COVER

(1) Align engine cover (2) (Fig. 27) with mounting bracket (1). Push down firmly on all four corners of engine cover to snap in place.

(2) Install oil fill cap.

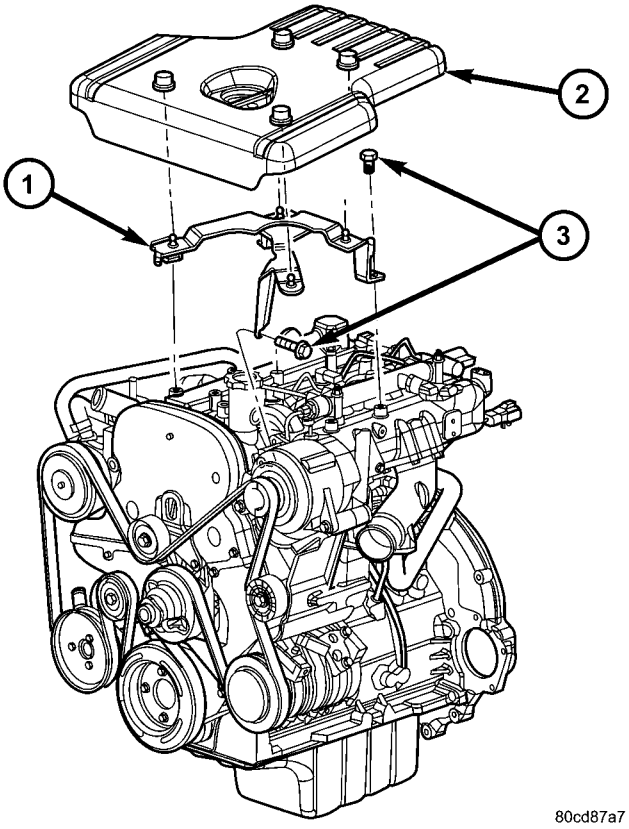

Fig. 27 ENGINE COVER REMOVAL/INSTALLATION

1 - ENGINE COVER BRACKET
2 - ENGINE COVER
3 - RETAINING BOLTS

2.8L COMMON RAIL DIESEL ENGINE (Continued)

SPECIFICATIONS

ENGINE SPECIFICATIONS

GENERAL DESCRIPTION

DESCRIPTION	SPECIFICATION
Engine Type	R2816K5A
Number of Cylinders	4
Bore	94 mm
Stroke	100 mm
Displacement	2776cc
Injection Order	1-3-4-2
Compression Ratio	17.5:1 (± 0.5)
Maximum Power	120 kW (163 H.P.) @ 3800 RPM
Peak Torque	400 N·m (295 ft.lb.) @ 1800 RPM
Cylinder Compression (Max. Difference Between Cylinders	5 Bar (72.5 psi)
Minimum Oil Pressure (Warm)	0.7 Bar (10 psi.) @ Idle 2 Bar (29 psi.) @ 3800 RPM

CRANKSHAFT

DESCRIPTION	SPECIFICATION	
	Metric	Standard
Front Journal Diameter-Nominal	62.985-63.005 mm	2.479-2.480 in
Front Journal Diameter- minus 0.25	62.735-62.755 mm	2.469-2.470 in.
Front Bearing Diameter-Nominal	63.005-63.034 mm	2.480-2.481 in.
Front Bearing Diameter-minus 0.25	62.755-62.784 mm	2.471-2.478 in
Clearance Between the Journal and Bear-ing	0.00-0.049 mm	0.000-0.001 in.
Center Journal Diameter-Nominal	63.005-63.020 mm	0.001-0.003 in.
Center Journal Diameter-minus 0.25	62.775-62.770 mm	2.470-2.471
Center Bearing Diameter-Nominal	63.005-63.020 mm	2.480-2.481 in.
Center Bearing Diameter-minus 0.25	62.775-62.770 mm	2.470-2.471 in.
Clearance Between Journal and Bearing	0.008-0.051 mm	0.0003-0.0002 in
Rear Journal Diameter-Nominal	89.980-90.000 mm	3.542-3.543 in
Rear Journal Diameter- minus 0.25	89.730-99.750 mm	3.532-3.927 in.
Rear Bearing Diameter-Nominal	90.045-90.065 mm	3.545-3.546 in.
Rear Bearing Diameter- minus 0.25	89.795-89.815 mm	3.535-3.536 in.
Clearance Between Journal and Bearing	0.045-0.080 mm	0.001-0.003 in.
Connecting Rod Journal-Nominal	53.940-53.955 mm	2.123-2.124 in.
Connecting Rod Journal- minus 0.25	53.690-53.705 mm	2.113-2.114 in.
Connecting Rod Bearing-Nominal	53.997-54.016 mm	2.125-2.126 in.
Connecting Rod Bearing- minus 0.25	53.727-53.766 mm	2.115-2.116 in.
Clearance Between Journal and Bearing	0.022-0.076 mm	0.0008-0.0029 in.
Crankshaft End Play	0.080-0.280 mm	0.003-0.011 in.
Adjustment	Thrust Washers	Thrust Washers
Thrust Washers Available	2.31-2.36 mm	0.090-0.092 in.
	2.41-2.46 mm	0.094-0.096 in.
	2.51-2.56 mm	0.098-0.100
Carrier with Thrush Washers Installed	27.670-27.820 mm	1.089-1.095 in.

2.8L COMMON RAIL DIESEL ENGINE (Continued)

MAIL BEARING CARRIERS

DESCRIPTION	SPECIFICATION	
	Metric	Standard
Internal Diameter-Front	67.025-67.050 mm	2.638-2.639 in.
Internal Diameter-Center	66.670-66.690 mm	2.624-2.624 in.
Internal Diameter-Rear	85.985-86.005 mm	3.385-3.386 in.

LINERS

DESCRIPTION	SPECIFICATION	
	Metric	Standard
Internal Diameter	091.997-92.015 mm.	3.621-3.622 in.
Protrusion	0.00-0.05 mm	0.00-0.001 in.
Available Adjustment Shims	0.15 mm	0.005 in.
	0.17 mm	0.006 in.
	0.20 mm	0.007 in.
	0.23 mm	0.009
	0.25 mm	0.0098

CYLINDER HEAD

DESCRIPTION	SPECIFICATION	
	Metric	Standard
Minimum Thickness	94.95-95.05 mm.	3.738-3.742 in.
Gasket Thickness	1.32 mm ± 0.08, 0 notches	0.0051 in. ± 0.003, 0 notches
	1.42 mm ± 0.08, 1 notch	0.051 in. ± 0.003, 1 notch
	1.52 mm ± 0.08, 2 notches	0.059 in. ± 0.003, 1 notches

CONNECTING RODS

DESCRIPTION	SPECIFICATION	
	Metric	Standard
Small end Bearing Internal Diameter	32.035-32.050 mm	1.2612-1.2618 in.
Large End Internal Diameter	53.997-54.016 mm	2.125-2.126 in.

PISTONS

DESCRIPTION	SPECIFICATION	
	Metric	Standard
Skirt Diameter (measured at approximately 10 mm above the bottom of the skirt)	93.912-93.928 mm.	3.6973-3.6979 in.
Piston Clearance	0.010-0.22 mm	0.0003-0.0008 in.
Top of Piston to Cylinder Head	0.69-0.83 mm	0.027-0.032 in.
Piston Protrusion	0.460-0.609 mm Fit Gasket, Number (1.32mm), 0 hole	0.018-0.023 in. Fit Gasket, Number (0.051 in.), 0 notches
	0.610-0.709 Fit Gasket, Number (1.42 mm) 1 hole	0.024-0.027 in. Fit Gasket, Number (0.055 in.) 1 notch or hole
	0.710-0.810 Fit Gasket, Number (1.52 mm), 2 holes	0.027-0.031 in. Number (0.059 in) 2 notches or holes

PISTON PINS

DESCRIPTION	SPECIFICATION	
	Metric	Standard
Type	Full Floating	
Pin Diameter	32.004-32.010 mm	1.259-1.260 in.
Clearance	0.010-0.020 mm	0.0003-0.0007 in.

2.8L COMMON RAIL DIESEL ENGINE (Continued)

PISTON RINGS

DESCRIPTION	SPECIFICATION	
	Metric	Standard
Clearance in Groove		
Top Compression Ring	0.078-0.137 mm	0.003-0.005 in.
Second Compression Ring	0.070-0.110 mm	0.002-0.004 in.
Oil Control (Steel Rails)	0.40-0.080 mm	0.001 - 0.003 in.
Fitted Gap		
Top Compression Ring	.030-0.45 mm	0.011-0.017 in.
Second Compression Ring	0.030 - 0.050 mm	0.0011 - 0.0019 in.
Oil Ring (Steel Ring)	.025 - 0.50 mm	.0009 - .0019 in.

CAMSHAFT

DESCRIPTION	SPECIFICATION	
	Metric	Standard
Journal Diameter-Front	29.960-29.980 mm	1.179-1.180 in.
Bearing Clearance	0.03-0.08 mm	0.001-0.003 in.
Journal Diameter-Center	39.250-39.270 mm	1.545-1.546 in.
Bearing Clearance	0.03-0.08 mm	0.001-0.003 in
Journal Diameter-Rear	39.250-39.270 mm	1.545-1.546 in.
Bearing Clearance	0.03-0.08 mm	0.001-0.003 in.
Camshaft End Play	0.10-0.55mm	0.004-0.021 in.

HYDRAULIC LIFTER

DESCRIPTION	SPECIFICATION	
	Metric	Standard
Outside Diameter	11.994 ± 0.006 mm	0.472 ± 0.0002 in.

VALVES

DESCRIPTION	SPECIFICATION	
	Metric	Standard
Face Angle-Intake	45° 25'-55° 35' mm	-
Face Angle-Exhaust	45° 25'-45° 35' mm	-
Intake Valve Opens	15.6° ± 2° A.T.D.C.	-
Intake Valve Closes	64.4° ± 2° A.B.D.C.	-
Exhaust Valve Opens	66° ± 2° B.B.D.C.	-
Exhaust Valve Closes	32° ± 2° A.T.D.C.	-
Head Diameter-Intake	32.30-32.50 mm	1.271-1.279 in.
Head Diameter-Exhaust	30.80-31.00 mm	1.212-1.220 in.
Stem Diameter-Intake	5.952-5.970 mm	0.234-0.235 in.
Stem Diameter-Exhaust	5.942-5.960 mm	0.233-0.234 in.
Clearance in Guide-Intake	0.030-0.060 mm	0.001-0.002 in.
Clearance in Guide-Exhaust	0.040-0.070 mm	0.001-0.002 in.

VALVE GUIDE

DESCRIPTION	SPECIFICATION	
	Metric	Standard
Inside Diameter	6.00-6.012 mm	0.2362-0.2366 in.
Fitted Height-Intake	14.5-15.0 mm	0.570-0.590 in.
Fitted Height-Exhaust	16.5-17.0 mm	0.649-0.669 in.

2.8L COMMON RAIL DIESEL ENGINE (Continued)

VALVE SPRING

DESCRIPTION	SPECIFICATION	
	Metric	Standard
Free Length	45.26 mm	1.781 in.
Fitted Length	38.0 mm	1.496 in.
Load at Fitted Length	182 ± 5-10% Kg	-
Load at Top of Lift	395 ± 5% Kg	-
Number of Coils	8	-

LUBRICATION

DESCRIPTION	SPECIFICATION	
	Metric	Standard
Pressure Relief Valve Opens	6.50 bar	94 psi
Pressure Relief Valve Spring-Free Length	51.5 mm	2.02 in.

OIL PUMP

DESCRIPTION	SPECIFICATION	
	Metric	Standard
Outer Rotor End Float	0.060-0.160 mm	0.002-0.006 in.
Inner Rotor End Float	0.060-0.160	0.002-0.006 in.
Outer Rotor to Body Diameter Clearance	0.130-0.240 mm	0.005-0.009 in.
Rotor Body to Drive Gear Clearance (pump not fitted)	0.90-1.50 mm	0.035-0.059 in.

TORQUE

2.8L DIESEL TORQUE SPECIFICATIONS

DESCRIPTION	N·m	Ft. Lbs.	In. Lbs.
Oil Pump Bolts	10.8	8	96
Vacuum Pump Bolts	10.8	8	96
Vacuum Pump Pipe to Block	56.9	42	—
Crankshaft Gear Bolts	10.8	8	96
Crankshaft Position Sensor Bolts	10.8	8	96
Flywheel Bolts - 2.8L, Refer to the Service Procedure			
Flex Plate Bolts - 2.8L, Refer to the Service Procedure			
Cylinder Head Bolts - Refer to the Service Procedure			
Reluctor Wheel Bolts	14.6	11	130
Rear Main Bearing Support Bolts	27.5	21	240
Oil Cooler to Engine Block Bolt	47.1	35	—
Oil Cooler Mounting Stud	50	37	—
Oil Level Indicator to Cylinder Head Cover	10.8	—	96
Oil Level Indicator Tube to Pan	10.8	—	96
Water Pump Housing Nuts	24.4	18	212
Connecting Rod Bolts - Refer to the Service Procedure			
Balance Shaft Bolts	32.4	24	—
Oil Jet Bolts	10.8	8	96
Oil Pump Pick-up Tube	32.4	24	—
Oil Pan Bolts	11.8	8	96

2.8L COMMON RAIL DIESEL ENGINE (Continued)

DESCRIPTION	N·m	Ft. Lbs.	In. Lbs.
Structural Support to Engine and Transmission Bolts	45.1	33	—
Crankshaft Hub Bolt	275	203	—
Crankshaft Pulley Bolts	32.4	24	—
Front Engine Cover Bolts	6	—	53
Transmission to Engine Bolts	83.4	62	—
Cylinder Head Cover / Intake Manifold Bolts	24.5	18	—
Camshaft Timing Access Bolts	24.5	18	—
Camshaft Access Plugs	80	59	—
Oil Separator Bolts	10.8	8	96
Camshaft Position Sensor Bolt	10.8	8	96
Boost Pressure / Intake Air Temp. Sensor Bolts	5.4	—	48
Glow Plug	12.5	—	110
Accessory Drive Bracket Bolts	45.1	33	—
Accessory Drive Belt Idler Pulley Bolt	53	39	—
Vacuum Line Fitting Bolt	56.9	42	—
Fuel Pump Nuts	27.5	21	—
Fuel Line Fittings at Pump	27.5	21	—
Fuel Rail Retaining Bolts	24.5	18	217
Inner Timing Belt Cover Bolts			
8mm	10.8	8	96
10mm	45.1	33	—
Outer Timing Belt Cover Bolts			
3mm	6	—	54
8mm	10.8	8	96
Engine Mount Bracket to Cylinder Head Bolts	45.1	33	—
Structural Support to Engine and Transmission Bolts	45.1	33	
Intake Inlet Tube Bolts	10.1	8	89
Camshaft Sprocket Bolts	108	80	—
Camshaft Timing Access Bolts	24.5	18	212
Timing Belt Idler Pulley Bolt	47.1	35	—
Timing Belt Tensioner Bolt	29.4	22	—
Fuel Injection Pump Gear Nut	88.3	65	—
Fuel Injection Pump Retaining Nuts	24.4	18	212
Engine Lift Hook Bolts	45.1	33	—
Thermostat Housing Bolts	24.5	18	—
Turbocharger Oil Supply Line Fitting	24.5	18	217
Turbocharger Oil Return Line Bolts	10.8	—	96
Exhaust Manifold Nuts	36	26.5	—
Exhaust Manifold Heat Shield	24.5	18	217
Exhaust Manifold Heatshield Bolts	27.5	21	—
EGR Valve Bolts	24.5	18	—
EGR Air Control Valve to Cylinder Head Cover	10.8	—	96

2.8L COMMON RAIL DIESEL ENGINE (Continued)

DESCRIPTION	N·m	Ft. Lbs.	In. Lbs.
Coolant Pipe to EGR Valve Bolts	24.5	18	—
Turbocharger Downpipe Nuts	32.4	24	—
Turbocharger Bracket Bolts	47.1	35	—
Vibration Damper to Crankshaft Hub Bolts	27.5	21	—
Crankshaft Support Bolts	44.1	33	—
Turbocharger to Exhaust Manifold Nuts	32.4	24	—

SPECIAL TOOLS

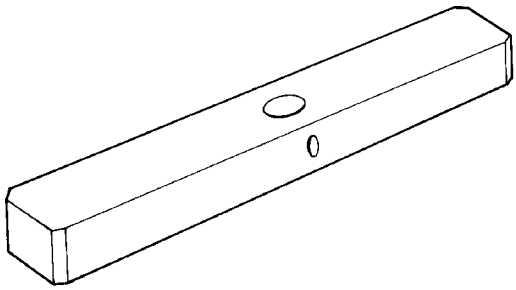

80a1aa43

Fig. 28 VM.1010 CYLINDER LINER PROTRUSION TOOL

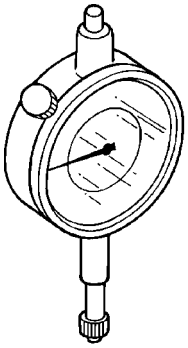

80a1aa46

Fig. 29 VM.1013 DIAL INDICATOR

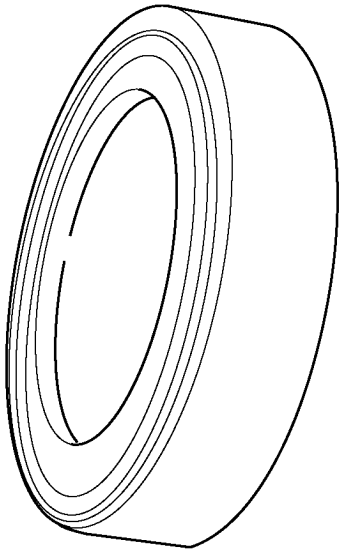

8120d646

VM.1050 CRANKSHAFT REAR SEAL INSTALLER

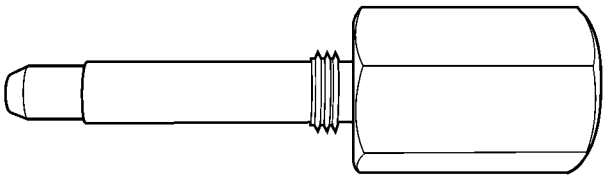

80c143ba

VM.1052 INTAKE CAMSHAFT ALIGNMENT PIN

2.8L COMMON RAIL DIESEL ENGINE (Continued)

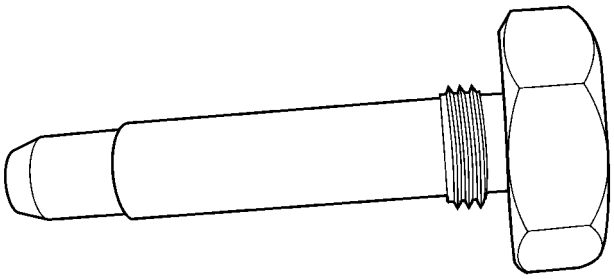

80c1449e

VM.1053 EXHAUST CAMSHAFT ALIGNMENT PIN

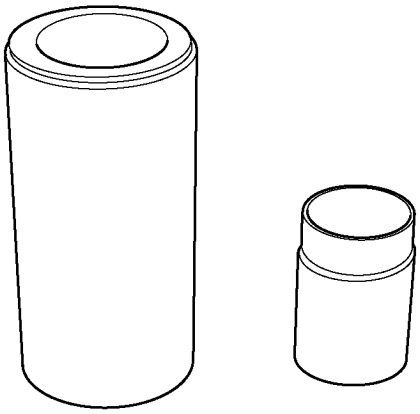

8121483c

VM.1057 CAMSHAFT OIL SEAL INSTALLER

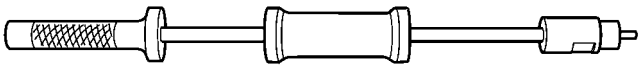

80c14546

VM.1054 RELIEF VALVE REMOVER/CENTRAL CARRIER PIN REMOVER/INSTALLER

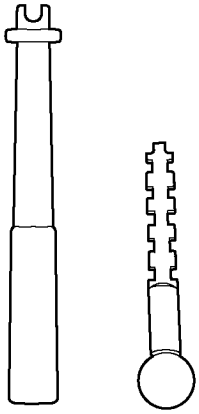

81214825

VM.1058 CAMSHAFT OIL SEAL REMOVER

80c13cec

VM.1055 HIGH PRESSURE INJECTION PUMP GEAR HOLDER

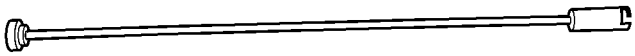

80c17f19

VM.1060 OIL JET REMOVER /INSTALLER

2.8L COMMON RAIL DIESEL ENGINE (Continued)

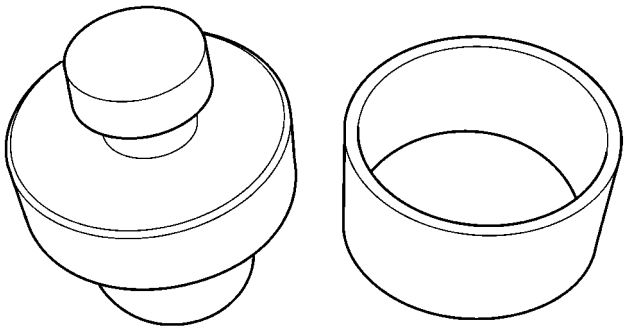

80c17810

VM.1061 FRONT COVER AND FRONT OIL SEAL INSTALLER

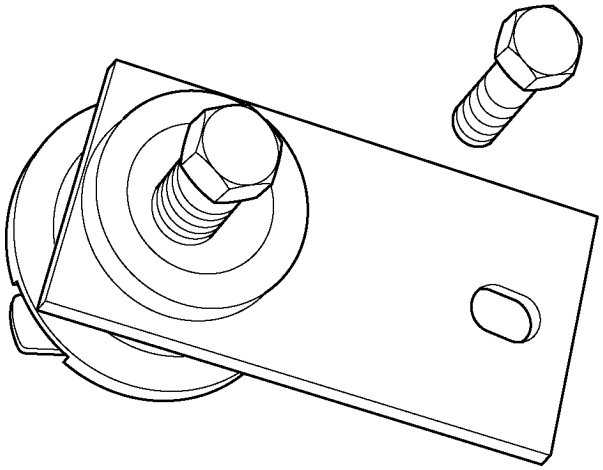

8120d627

VM.1067 HIGH PRESSURE PUMP REMOVER

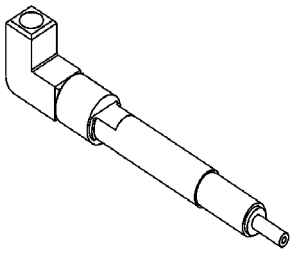

VM.1072A COMPRESSION TESTER ADAPTER

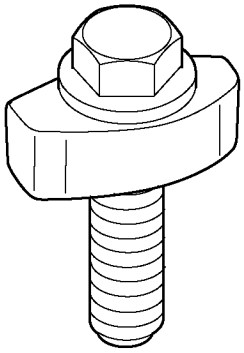

808bb90a

VM.1076 CYLINDER RETAINER

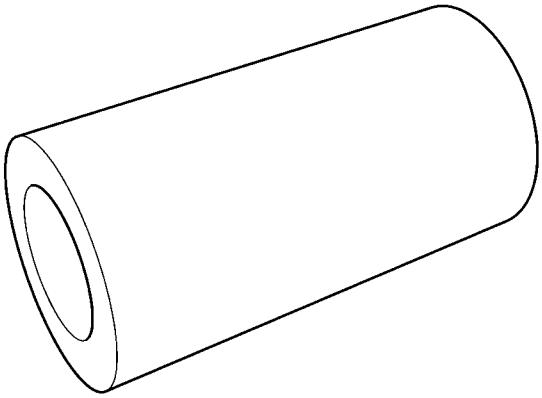

80c17f51

VM.1069 CRANKSHAFT REM/INSTALL SLEEVE

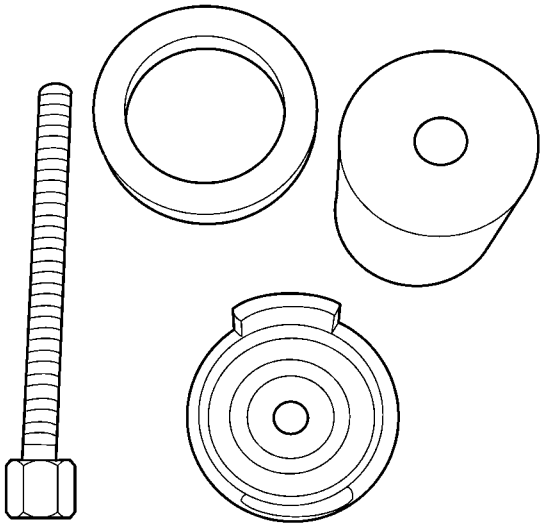

80c17883

VM.1073 CRANKSHAFT FRONT BEARING REMOVER/INSTALLER

2.8L COMMON RAIL DIESEL ENGINE (Continued)

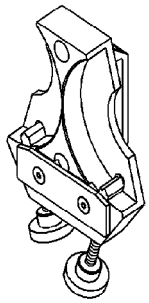

VM.1085 CAMSHAFT LOCKING TOOL

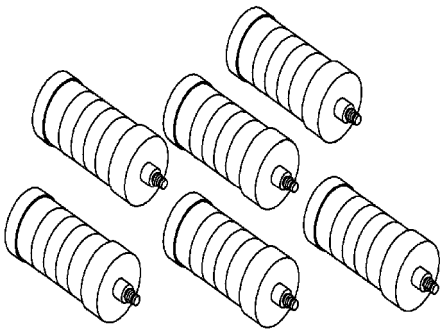

VM.9545 RETURN FUEL QUANTITY VIALS

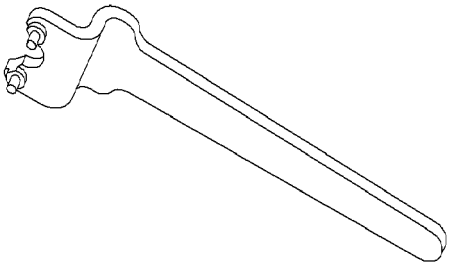

VM.9660 TIMING BELT TENSIONER WRENCH

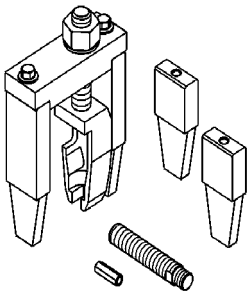

VM.9075 A FUEL INJECTOR EXTRACTOR

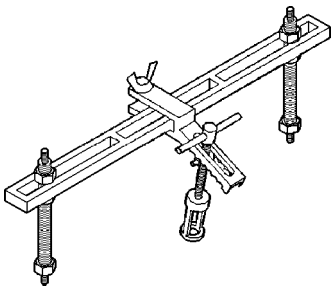

Valve Spring Compressor MD-998772-A

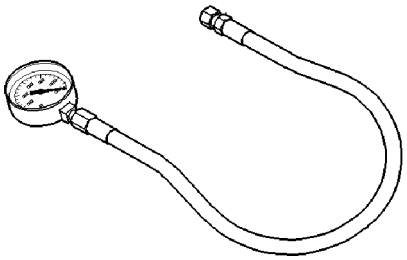

VACUUM AND PRESSURE GAUGE 6828

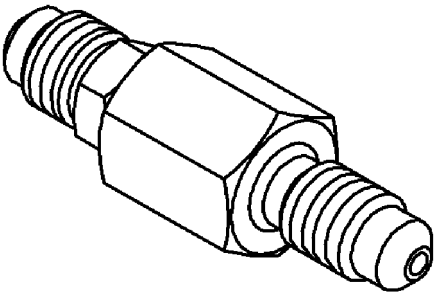

FITTING 9663

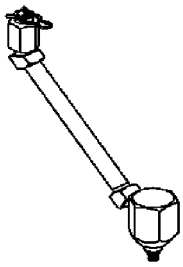

ADAPTOR 9686

AIR CLEANER ELEMENT

REMOVAL

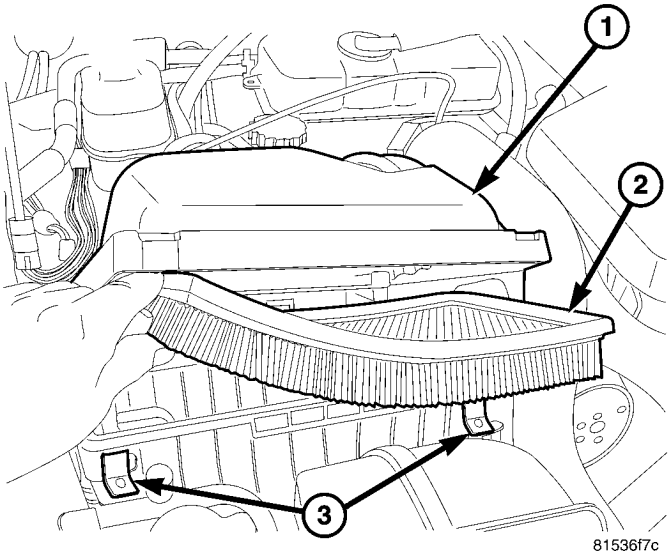

Fig. 30 AIR CLEANER ELEMENT

1 - AIR CLEANER COVER
2 - AIR CLEANER
3 - COVER RELEASE

Housing removal is not necessary for element (filter) replacement.

(1) Disconnect air intake duct at side of element cover.

(2) Pry up 2 spring clips from front of housing cover (spring clips retain cover to housing).

(3) Release housing cover from locating tabs located on rear of housing, and remove cover.

(4) Remove air cleaner element (filter) from housing (Fig. 30).

(5) Clean inside of housing before replacing element.

INSTALLATION

(1) Install element into housing (Fig. 30).

(2) Position housing cover into housing locating tabs.

(3) Pry up spring clips and lock cover to housing.

(4) Connect air intake duct.

If any air filter, air resonator, air intake tubes or air filter housing clamps had been loosened or removed, tighten them to 5 N·m (40 in. lbs.) torque.

AIR CLEANER HOUSING

REMOVAL

(1) Disconnect the mass airflow connector.

(2) Remove the air outlet hose from the air cleaner assembly.

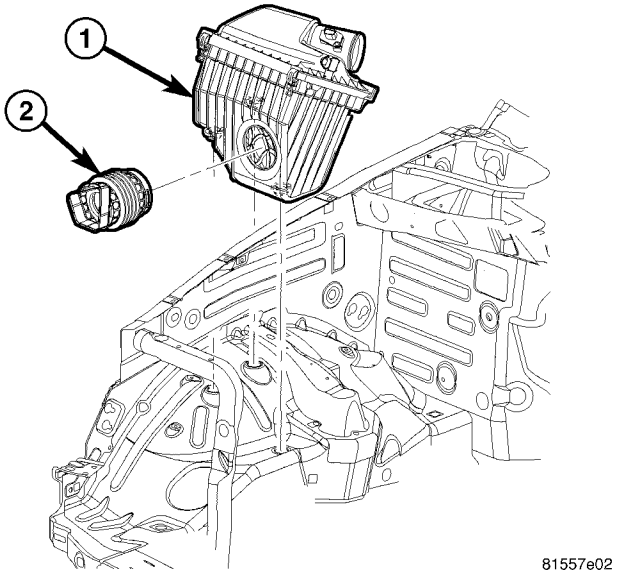

Fig. 31 AIR CLEANER HOUSING

1 - AIR CLEANER HOUSING
2 - INLET DUCT

(3) Pry up two spring clips from front of housing cover (spring clips retain cover to housing).

(4) Release housing cover from locating tabs located on rear of housing, and remove cover.

(5) Remove the air cleaner element.

(6) Remove the air inlet duct.

(7) Pulling upward, remove the air cleaner housing from the rubber mounts (Fig. 31).

INSTALLATION

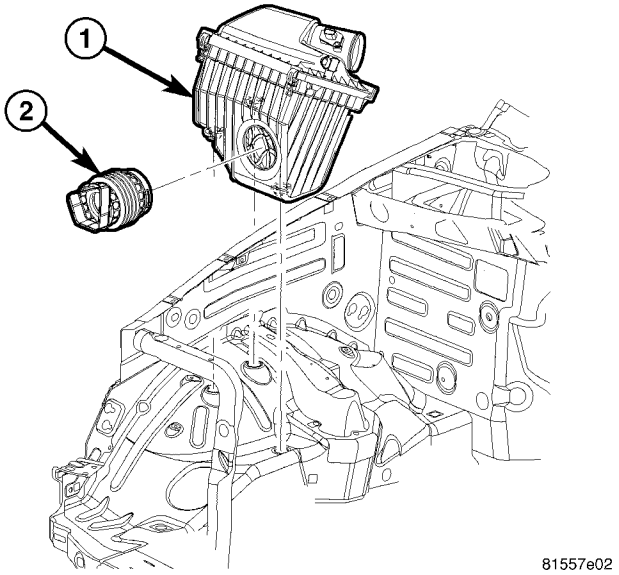

Fig. 32 AIR CLEANER HOUSING

1 - AIR CLEANER HOUSING
2 - INLET DUCT

(1) Push down on the housing to engage the locking grommets (Fig. 32).

AIR CLEANER HOUSING (Continued)

(2) Position the air cleaner housing in vehicle.
(3) Install the air cleaner element.
(4) Position housing cover into housing locating tabs.
(5) Pry up spring clips and lock cover to housing.
(6) Install the air outlet tube.
(7) Connect air intake duct.
(8) Connect the electrical sensor connectors.

CYLINDER HEAD

DESCRIPTION

The 2.8L aluminum, overhead valve cylinder head has different dimensions for the intake air and a bias relief port. The cylinder head itself is not resurfacable. The cylinder head uses a selectable Multi-layered Steel gasket that is available in three sizes. (Fig. 33).

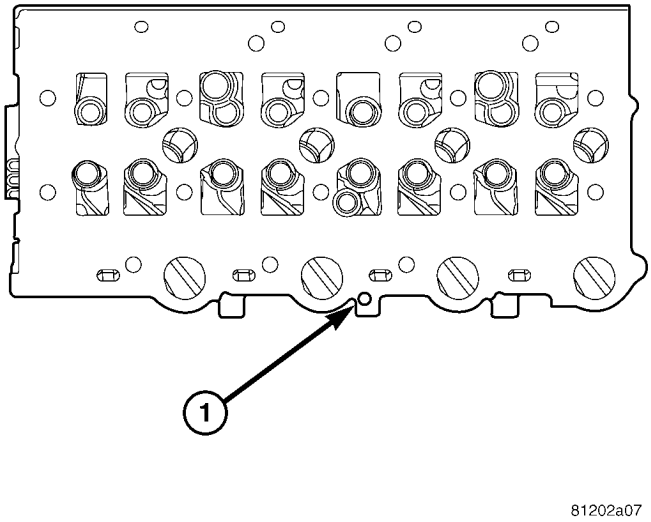

Fig. 33 CYLINDER HEAD IDENTIFICATION

1 - CYLINDER HEAD RELIEF

STANDARD PROCEDURE

VALVE SEALS - IN VEHICLE

(1) Disconnect the negative battery cable.

(2) Remove the intake manifold/cylinder head cover (Refer to 9 - ENGINE/CYLINDER HEAD/CYLINDER HEAD COVER(S) - REMOVAL).

NOTE: Rocker arms and lifters must be kept in order of removal and stored in the up right position.

(3) Position the rocker arms aside. (Refer to 9 - ENGINE/CYLINDER HEAD/ROCKER ARM / ADJUSTER ASSY - REMOVAL).

(4) Install special tool VM.1072A, compression tester adaptor, into the injector hole and retain with an injector hold down bolt (Fig. 34).

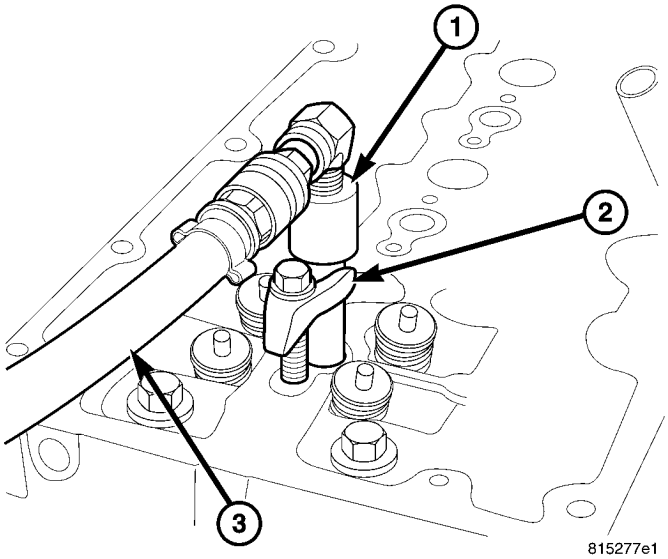

Fig. 34 VM.1072A COMPRESSION TESTER ADAPTOR

1 - VM.1072A
2 - FUEL INJECTOR HOLD DOWN
3 - COMPRESSED AIR SUPPLY

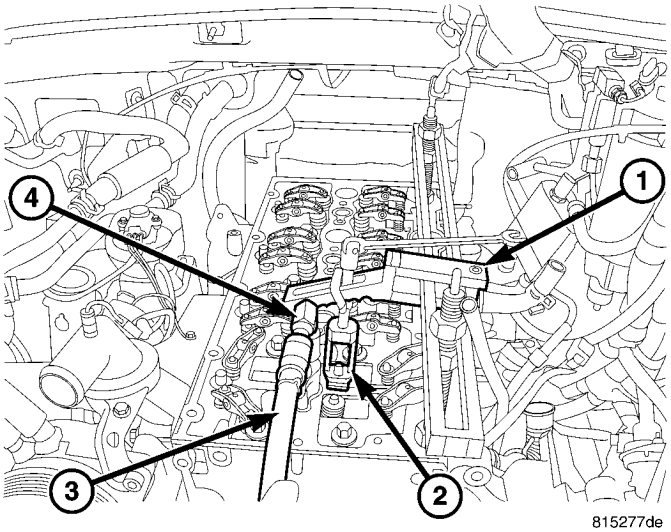

Fig. 35 MD998772A VALVE SPRING COMPRESSOR

1 - MD998772A VALVE SPRING COMPRESSOR
2 - MD998772A-15 ADAPTOR
3 - REGULATED AIR SUPPLY
4 - VM1072A COMPRESSION TESTER ADAPTOR

(5) Prepare special tool MD998772A for usage by inverting the tool to cylinder head holding screws so that the thread size matches the cylinder head.

(6) Install special tool MD998772A onto cylinder head and using adaptor MD998772A-15, place the adaptor over the valve spring (Fig. 35).

(7) Connect a regulated shop air supply to VM.1072A, and pressurize the cylinder.

CYLINDER HEAD (Continued)

(8) Place shop towels around the working area of the cylinder head to prevent valve collates from accidently entering the engine.

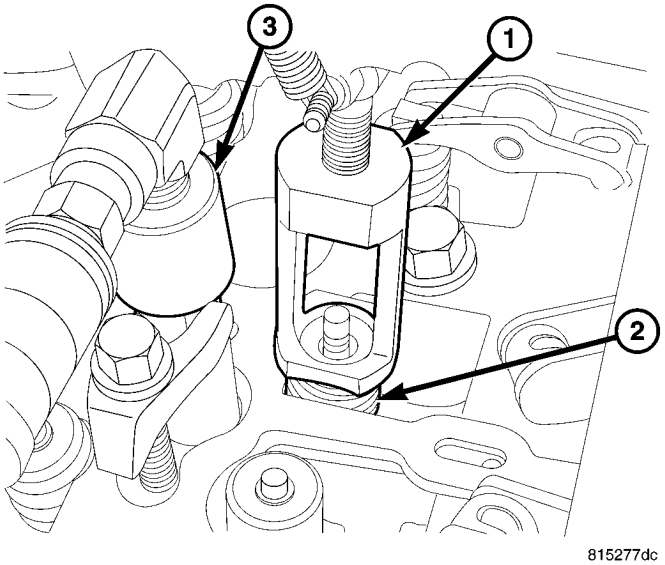

Fig. 36 MD998772A-15 ADAPTOR

1 - MD998772A-15 ADAPTOR
2 - VALVE SPRING
3 - VM.1072 COMPRESSION TESTER ADAPTOR

(9) Using adaptor MD998772A-15 adaptor, collapse the valve spring and remove the collates (Fig. 36).

(10) Remove the valve spring assembly.

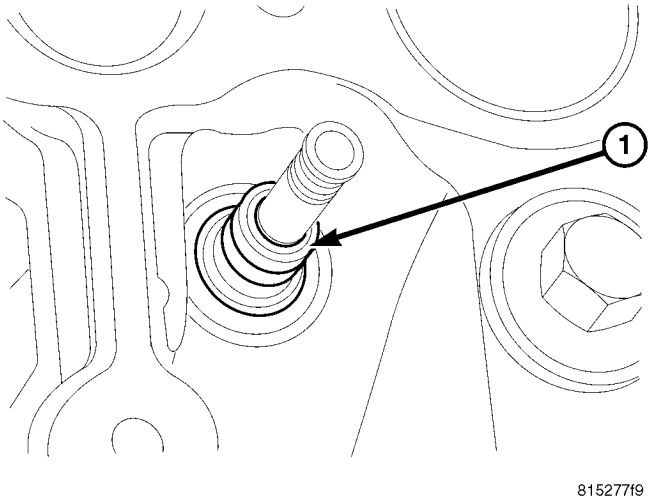

Fig. 37 VALVE SEAL

1 - VALVE SEAL

(11) Remove the valve seal (Fig. 37).

(12) Repeat this procedure for all cylinders.

VALVE SERVICE

This procedure is done with the engine cylinder head removed from the block.

DISASSEMBLY

(1) Remove the engine cylinder head from the cylinder block (Refer to 9 - ENGINE/CYLINDER HEAD - REMOVAL).

(2) Use Valve Spring Compressor Tool and compress each valve spring.

(3) Remove the valve locks, retainers, and springs.

(4) Use a smooth stone or a jewelers file to remove any burrs on the top of the valve stem, especially around the groove for the locks.

(5) Remove the valves, and place them in a rack in the same order as removed.

VALVE CLEANING

(1) Clean all carbon deposits from the combustion chambers, valve ports, valve stems, valve stem guides and head.

(2) Clean all residue and gasket material from the engine cylinder head machined gasket surface.

INSPECTION

(1) Inspect for cracks in the combustion chambers and valve ports.

(2) Inspect for cracks on the exhaust seat.

(3) Inspect for cracks in the gasket surface at each coolant passage.

(4) Inspect valves for burned, cracked or warped heads.

(5) Inspect for scuffed or bent valve stems.

(6) Replace valves displaying any damage.

(7) Check valve spring height (Fig. 38).

VALVE SEAT REFACING

(1) Install a pilot of the correct size in the valve guide bore. Reface the valve seat to the specified angle with a good dressing stone. Remove only enough metal to provide a smooth finish.

(2) Use tapered stones to obtain the specified seat width when required.

VALVE GUIDES

(1) Valve Guides height requirement.

(2) Measurement A (Fig. 39): 16.50 - 17.00 mm. Measurment B : 14.50 - 15.00 mm.

VALVE STEM-TO-GUIDE CLEARANCE MEASUREMENT

(1) Measure and record internal diameter of valve guides. Valve guide internal diameter is 6.0 to 6.012 mm (0.2362 to 0.2366 in.).

(2) Measure valve stems and record diameters. Intake valve stem diameter 5.952 to 5.97 mm (0.2343

CYLINDER HEAD (Continued)

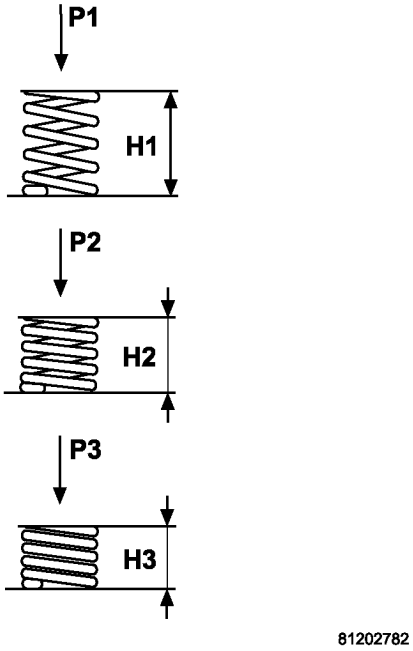

Fig. 38 VALVE SPRING CHART

	LOAD Kg		HEIGHT mm	STATE
P1	0.00	H1	45.26	FREE LENGTH
P2	182-5 +10%	H2	38.00	VALVE CLOSED
P3	395±5%	H3	28.20	VALVE OPEN

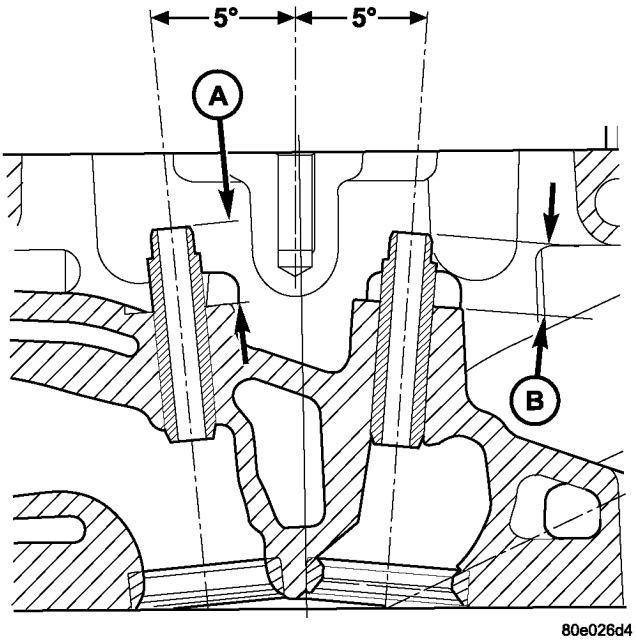

Fig. 39 VALVE GUIDE HEIGHT

to 0.2350 in). Exhaust valve stem diameter 5.942 to 5.96 mm (0.2339 to 0.2346 in).

(3) Subtract diameter of valve stem from internal diameter of its respective valve guide to obtain valve stem clearance in valve guide. Clearance of inlet valve stem in valve guide is 0.03 to 0.06 mm (.0011 to .0023 in). Clearance of exhaust valve stem in valve guide is 0.04 to 0.07 mm (.0015 to .0027 in).

(4) If valve stem clearance in valve guide exceeds tolerances, new valve guides must be installed.

STANDARD PROCEDURE - MEASURING PISTON PROTRUSION

CAUTION: DO NOT Rotate the engine with the cylinder head off without first installing the cylinder liner retainers VM.1076. Failure to do so may result in the cylinder liner moving and a false piston protrusion reading. A false piston protrusion reading may result in a wrong cylinder head gasket selection.

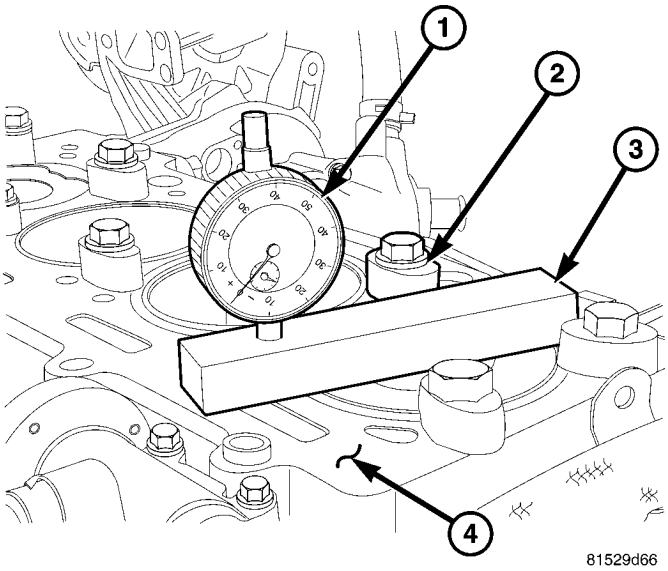

Fig. 40 PISTON PROTRUSION SET UP

1 - VM.1010 DIAL INDICATOR
2 - VM.1076 CYLINDER LINER RETAINERS
3 - VM.1013 STRAIGHT EDGE
4 - CYLINDER BLOCK SURFACE

(1) Use special tool VM.1010 with dial indicator special tool VM.1013 (Fig. 40).

(2) Bring the piston of cylinder number 1 exactly to top dead center.

(3) Lye the straight edge special tool VM.1010 across the cylinder sleeve and zero the dial indicator on the cylinder block mating surface (Fig. 40).

(4) Lye the straight edge special tool VM.1010 across the cylinder sleeve, setup the dial indicator on the piston crown (above the center of the piston pin) 5mm (1/8 in.) from the edge of the piston and note the measurement (Fig. 41).

CYLINDER HEAD (Continued)

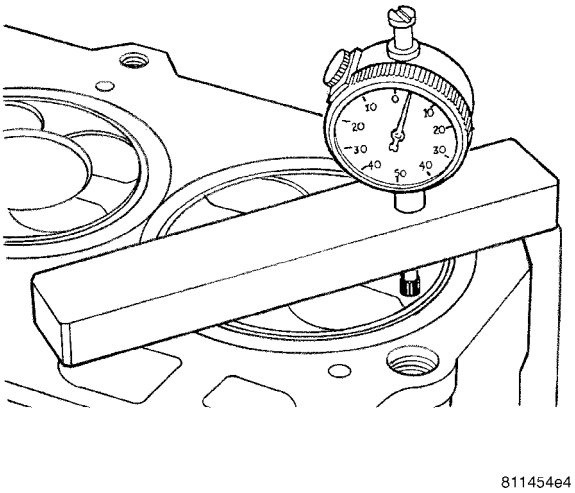

Fig. 41 PISTON PROTRUSION

NOTE: Install the cylinder liner retainers VM.1076 before rotating the engine.

(5) Repeat the procedure with the rest of the cylinders.

(6) Establish the thickness of the steel gasket by averaging the four piston protrusion readings.

Measure Dimension (mm)	0.460-0.609
Cylinder Head Gasket Thickness (mm)	1.32 No Holes or Notches
Piston Clearance (mm)	0.71-0.86
Measure Dimension (mm)	0.610-0.709
Cylinder Head Gasket Thickness (mm)	1.42 1 Hole or Notch
Piston Clearance (mm)	0.711-0.81
Measure Dimension (mm)	0.710-0.810
Cylinder Head Gasket Thickness (mm)	1.52 2 Holes or Notches
Piston Clearance (mm)	0.71-0.81

REMOVAL - CYLINDER HEAD

(1) Disconnect negative battery cable.

(2) Remove engine cover and bracket (Refer to 9 - ENGINE COVER - REMOVAL).

(3) Drain cooling system (Refer to 7 - COOLING/ENGINE/COOLANT - STANDARD PROCEDURE).

(4) Evacuate A/C.

(5) Remove radiator core support.

(6) Remove cooling fan and fan drive viscous clutch assembly (Refer to 7 - COOLING/ENGINE/FAN DRIVE VISCOUS CLUTCH - REMOVAL).

(7) Remove accessory drive belt (Refer to 7 - COOLING/ACCESSORY DRIVE/DRIVE BELTS - REMOVAL).

(8) Remove accessory drive belt tensioner and both idler pulleys, **Idler pulley bolts are L.H. thread.** (Refer to 7 - COOLING/ACCESSORY DRIVE/BELT TENSIONERS - REMOVAL).

(9) Remove power steering pump pulley.

(10) Remove front engine lift bracket.

(11) Remove cooling fan support (Refer to 7 - COOLING/ENGINE/RADIATOR FAN - REMOVAL).

(12) Remove generator and support bracketing (Refer to 8 - ELECTRICAL/CHARGING/GENERATOR - REMOVAL).

(13) Remove viscous heater.

(14) Rotate the engine to 90 degrees ATDC, or the 3 Oclock position at the crankshaft hub (Refer to 9 - ENGINE/VALVE TIMING - STANDARD PROCEDURE).

(15) Remove vibration damper.

(16) Disconnect main engine wiring harness connectors from right inner wheel housing.

(17) Disconnect main engine wiring harness ancillary components and set harness aside.

(18) Remove air cleaner housing.

(19) Remove exhaust manifold heat shield (Fig. 42).

(20) Remove turbocharger heat shield retaining bolt and position shield aside (Fig. 44).

(21) Remove turbocharger oil supply line from turbocharger (Fig. 44).

(22) Raise and support vehicle.

(23) Disconnect exhaust stabilizer bracket at lower exhaust manifold (Fig. 44).

(24) Disconnect exhaust system bracket at transmission crossmember.

(25) Lower the vehicle and remove the exhaust manifold retaining nuts.

(26) Slide the exhaust manifold and turbocharger off of exhaust manifold studs (Fig. 44).

(27) Remove coolant hoses at thermostat housing.

(28) Disconnect fuel return hose from fuel injectors and set aside (Refer to 14 - FUEL SYSTEM/FUEL INJECTION/FUEL INJECTOR - REMOVAL).

(29) Remove fuel injector pressure lines (Refer to 14 - FUEL SYSTEM/FUEL INJECTION/FUEL INJECTOR - REMOVAL).

(30) Disconnect fuel pump high pressure line at fuel rail (Refer to 14 - FUEL SYSTEM/FUEL INJECTION/FUEL INJECTOR - REMOVAL).

(31) Disconnect oil level indicator tube from intake manifold.

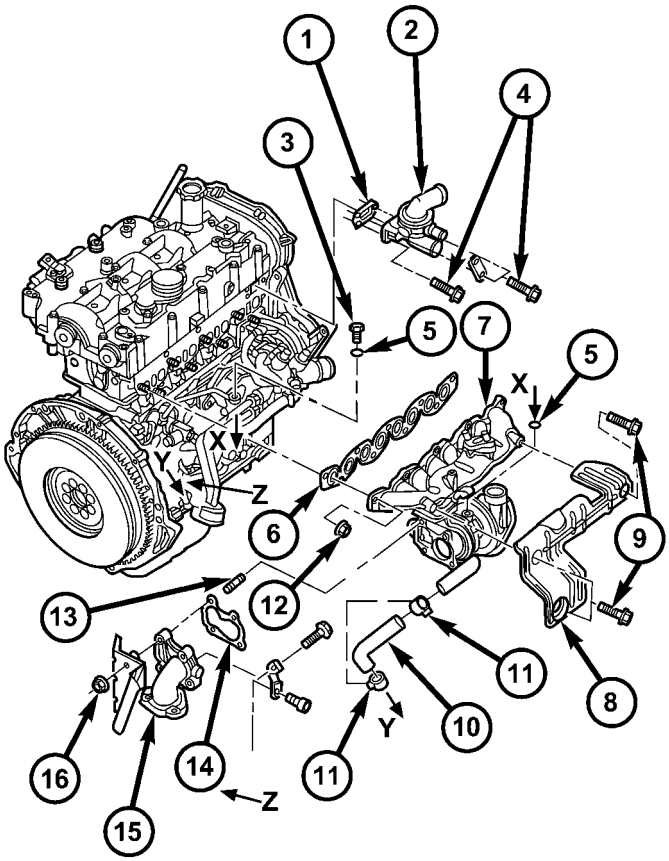

Fig. 42 THERMOSTAT HOUSING

1 - THERMOSTAT HOUSING GASKET
2 - THERMOSTAT HOUSING
3 - TURBOCHARGER OIL SUPPLY LINE BANJO BOLT
4 - THERMOSTAT HOUSING RETAINING BOLTS
5 - BRASS WASHER
6 - EXHAUST MANIFOLD GASKET
7 - EXHAUST MANIFOLD
8 - EXHAUST MANIFOLD HEATSHIELD
9 - EXHAUST MANIFOLD HEATSHIELD RETAINING BOLTS
10 - OIL RETURN HOSE
11 - HOSE CLAMPS
12 - EXHAUST MANIFOLD RETAINING NUTS
13 - TURBOCHARGER DOWNPIPE STUDS
14 - TURBOCHARGER DOWN PIPE GASKET
15 - TURBOCHARGER DOWNPIPE
16 - TURBOCHARGER DOWNPIPE RETAINING NUT

(32) Disconnect brake booster line bracket from intake manifold and position aside.

(33) Remove fuel injectors (Refer to 14 - FUEL SYSTEM/FUEL INJECTION/FUEL INJECTOR - REMOVAL).

CAUTION: Before removing the cylinder head cover/ intake manifold or timing belt the crankshaft hub must placed at 90° ATDC or the 3 O'clock position. Failure to do so could result in valve and/or piston damage during reassembly. (Refer to 9 - ENGINE/ VALVE TIMING - STANDARD PROCEDURE)

(34) Remove timing belt outer cover (Refer to 9 - ENGINE/VALVE TIMING/TIMING BELT / CHAIN COVER(S) - REMOVAL).

(35) Remove timing belt (Refer to 9 - ENGINE/ VALVE TIMING/TIMING BELT/CHAIN AND SPROCKETS - REMOVAL).

(36) Using VM.1085, remove both camshaft gears (Fig. 43).

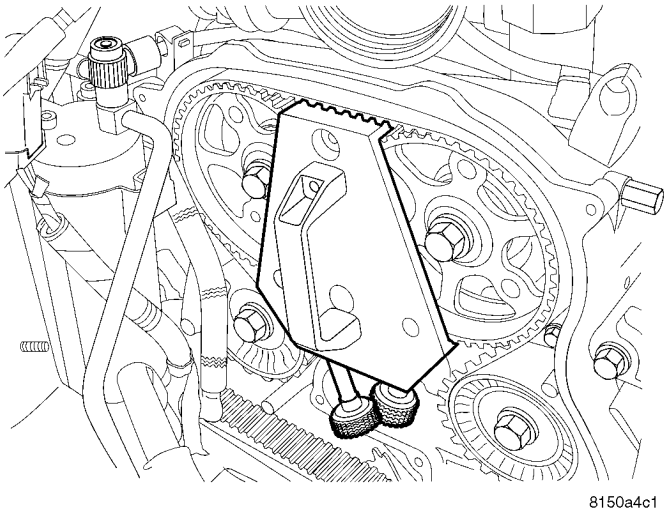

Fig. 43 VM.1085 CAMSHAFT LOCKING TOOL

(37) Remove timing belt inner cover (Refer to 9 - ENGINE/VALVE TIMING/TIMING BELT / CHAIN COVER(S) - REMOVAL).

(38) Remove cylinder head cover/intake manifold (Refer to 9 - ENGINE/CYLINDER HEAD/CYLINDER HEAD COVER(S) - REMOVAL).

(39) Remove rocker arm and lifter assemblies from cylinder head. **Be sure to keep in same order as removed.**

(40) Remove cylinder head cover/intake manifold gasket from cylinder head.

(41) Disconnect glow plug and engine coolant temperature electrical connectors.

(42) Remove turbocharger outlet to charge air cooler hose.

(43) Remove cylinder head bolts.

(44) Remove cylinder head assembly from engine block (Fig. 44).

CLEANING

Thoroughly clean the engine cylinder head and cylinder block mating surfaces. Clean the intake and exhaust manifold and engine cylinder head mating surfaces. Remove all gasket material and carbon.

Check to ensure that no coolant or foreign material has fallen into the tappet bore area.

CYLINDER HEAD (Continued)

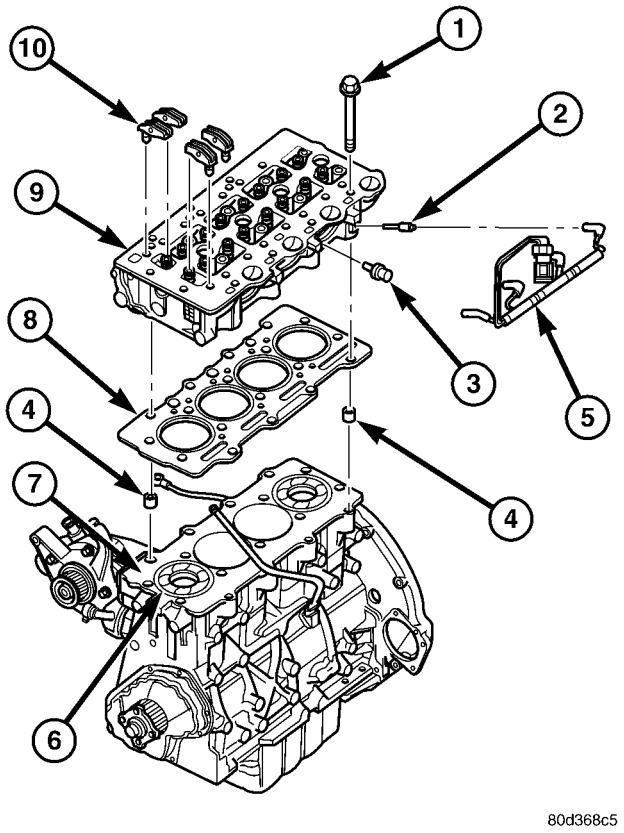

Fig. 44 CYLINDER HEAD ASSEMBLY

1 - CYLINDER HEAD BOLT
2 - GLOW PLUG
3 - COOLANT FITTING
4 - CYLINDER HEAD ALIGNMENT DOWEL
5 - GLOW PLUG HARNESS
6 - CYLINDER LINER
7 - CYLINDER BLOCK
8 - CYLINDER HEAD GASKET
9 - CYLINDER HEAD
10 - ROCKER ARM ASSEMBLIES

Remove the carbon deposits from the combustion chambers and top of the pistons.

INSPECTION

Use a straightedge and feeler gauge to check the flatness of the engine cylinder head and block mating surfaces.

The minimum cylinder head thickness is 89.95mm (3.541 in.).

INSTALLATION - CYLINDER HEAD

CAUTION: Piston protrusion must be measured to determine cylinder head gasket thickness if one or more cylinder liners have been replaced (Refer to 9 - ENGINE/CYLINDER HEAD - STANDARD PROCEDURE).

NOTE: If cylinder liner(s) have not been removed, the same thickness head gasket that was removed can be used.

(1) Clean and inspect gasket mating surfaces.
(2) Position correct head gasket on engine block.
(3) Place cylinder head on engine block.

CAUTION: New cylinder head bolts must be used. Do Not lubracate new cylinder head bolts. They already are coated with an anti scuff treatment.

(4) Tighten cylinder head bolts following procedure below.

Cylinder Head Bolt Torquing Procedure

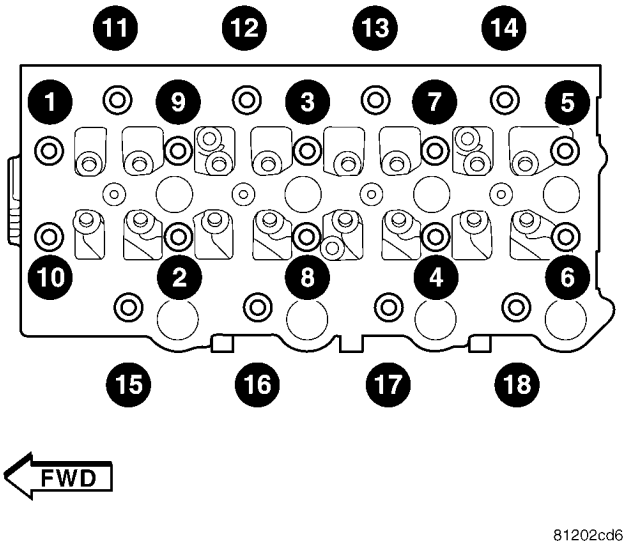

Fig. 45 CYLINDER HEAD TIGHTENING

a. Tighten all cylinder head bolts to 30 N.m (22 ft.lbs.) starting from the center bolts, following the cylinder head scheme and the following sequence: 3-2-1-10-9-8-7-6-5-4-11-12-13-14-15-16-17-18. (Fig. 45).

b. Without loosening any bolts, starting from the center bolts, tighten each bolt an additional 75° in the following sequence: 10-9-8-7-6-5-4-3-2-1. (Fig. 45).

c. Tighten the lateral cylinder head bolts an additional 50° in the following sequence: 11-12-13-14-15-16-17-18. (Fig. 45).

d. Finally tighten all bolts an additional 75° in the following sequence: 10-9-8-7-6-5-4-3-2-1-11-12-13-14-15-16-17-18. (Fig. 45).

CYLINDER HEAD (Continued)

(5) Slide exhaust manifold and turbocharger on exhaust manifold studs (Fig. 46).

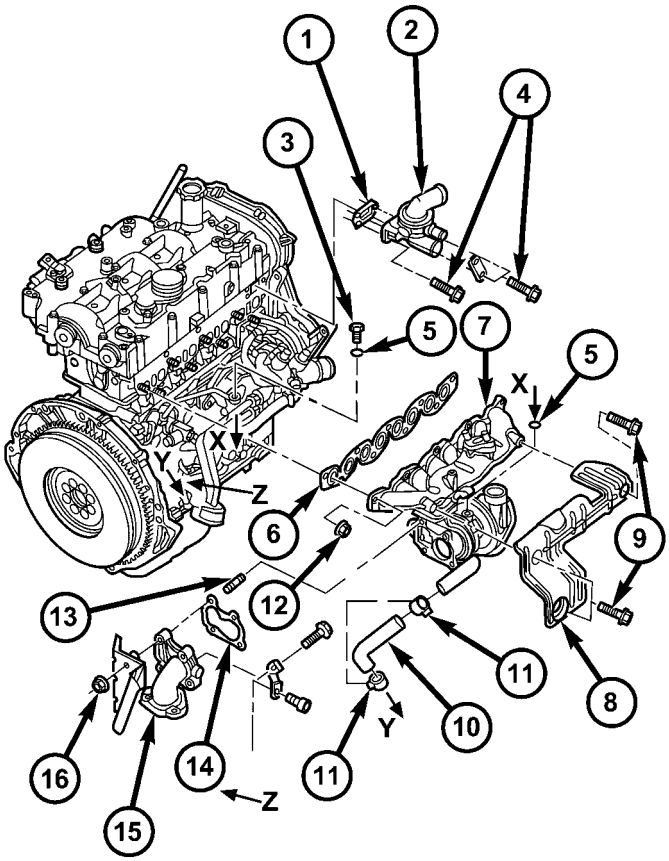

Fig. 46 THERMOSTAT HOUSING

1 - THERMOSTAT HOUSING GASKET
2 - THERMOSTAT HOUSING
3 - TURBOCHARGER OIL SUPPLY LINE BANJO BOLT
4 - THERMOSTAT HOUSING RETAINING BOLTS
5 - BRASS WASHER
6 - EXHAUST MANIFOLD GASKET
7 - EXHAUST MANIFOLD
8 - EXHAUST MANIFOLD HEATSHIELD
9 - EXHAUST MANIFOLD HEATSHIELD RETAINING BOLTS
10 - OIL RETURN HOSE
11 - HOSE CLAMPS
12 - EXHAUST MANIFOLD RETAINING NUTS
13 - TURBOCHARGER DOWNPIPE STUDS
14 - TURBOCHARGER DOWN PIPE GASKET
15 - TURBOCHARGER DOWNPIPE
16 - TURBOCHARGER DOWNPIPE RETAINING NUT

(6) Install exhaust manifold retaining nuts. Tighten the nuts to 36 N·m. (27 ft. lbs) in a cross sequence beginning in the middle and working outward, then perform the tightening sequence to the exhaust manifold nuts again.

(7) Install exhaust manifold heat shield. Torque bolts to 24.5N·m.(217 in. lbs).

(8) Install turbocharger outlet to charge air cooler pipe.

(9) Install upper radiator hose.

(10) Connect glow plug and coolant temperature sensor electrical connectors.

(11) Install new cylinder head cover/intake manifold gasket.

(12) Install rocker arm and lifter assemblies.**Be sure to put rocker arm and lifter assemblies in same location as removed.**

CAUTION: Care must be taken not to knock the rocker arms off of the valves when installing the cylinder head cover/intake manifold.

(13) Install cylinder head cover/intake manifold (Refer to 9 - ENGINE/CYLINDER HEAD/CYLINDER HEAD COVER(S) - INSTALLATION).

(14) Install timing belt inner cover (Refer to 9 - ENGINE/VALVE TIMING/TIMING BELT / CHAIN COVER(S) - INSTALLATION).

NOTE: Make sure the crankshaft is rotated to the 90 degree ATCD, or the 3 O'clock position (Refer to 9 - ENGINE/VALVE TIMING - STANDARD PROCEDURE).

(15) Install both camshaft gears and tighten bolts finger tight.

(16) Install timing belt (Refer to 9 - ENGINE/VALVE TIMING/TIMING BELT/CHAIN AND SPROCKETS - INSTALLATION) .

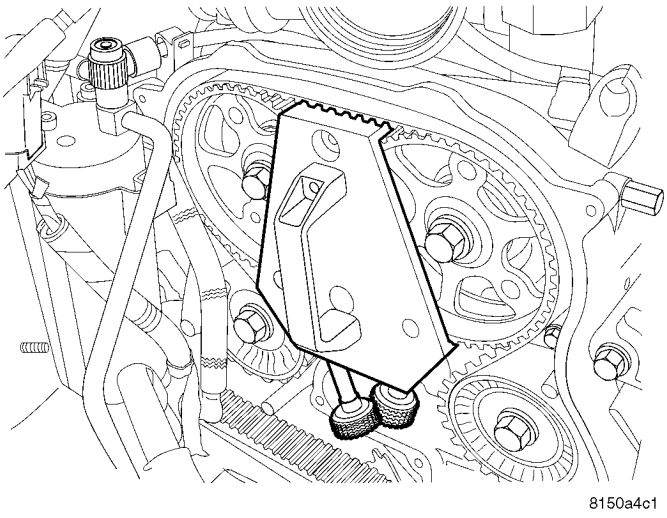

Fig. 47 VM.1085 CAMSHAFT LOCKING TOOL

(17) Using VM.1085, torque cam gear retaining bolts to 108 N·m. (Fig. 47).

(18) Install timing belt outer cover (Refer to 9 - ENGINE/VALVE TIMING/TIMING BELT / CHAIN COVER(S) - INSTALLATION).

(19) **Remove both camshaft locking pins at this time** (Refer to 9 - ENGINE/VALVE TIMING - STANDARD PROCEDURE).

CYLINDER HEAD (Continued)

(20) Install fuel injectors (Refer to 14 - FUEL SYSTEM/FUEL INJECTION/FUEL INJECTOR - INSTALLATION).

(21) Install brake booster line bracket to intake manifold.

(22) Install oil level indicator tube to intake manifold.

(23) Connect fuel pump high pressure line to fuel rail.

(24) Install fuel injector pressure lines.

(25) Connect fuel return hose to fuel injectors.

(26) Connect engine coolant hoses to thermostat housing.

(27) Raise vehicle.

(28) Reconnect exhaust system bracket at transmission crossmember.

(29) Connect exhaust stabilizer bracket to lower exhaust manifold (Fig. 46).

(30) Install turbocharger oil supply line to turbocharger.

(31) Lower vehicle.

(32) Install turbocharger heat shield.

(33) Install exhaust manifold heat shield.

(34) Install air cleaner housing.

(35) Install main engine wiring harness and connect all ancillary electrical components.

(36) Install viscous heater.

(37) Install vibration damper.

(38) Install generator (Refer to 8 - ELECTRICAL/CHARGING/GENERATOR - INSTALLATION).

(39) Install cooling fan support (Refer to 7 - COOLING/ENGINE/RADIATOR FAN - INSTALLATION).

(40) Install front engine lift bracket.

(41) Install power steering pump pulley.

(42) Install accessory drive belt tensioner and both idler pulleys. **Idler pulley retaining bolts are L. H. Thread.**

(43) Install accessory drive belt (Refer to 7 - COOLING/ACCESSORY DRIVE/DRIVE BELTS - INSTALLATION).

(44) Install cooling fan and fan drive viscous clutch assembly (Refer to 7 - COOLING/ENGINE/FAN DRIVE VISCOUS CLUTCH - INSTALLATION).

(45) Install upper radiator core support.

(46) Refill cooling system (Refer to 7 - COOLING/ENGINE/COOLANT - STANDARD PROCEDURE).

(47) Install engine cover and bracket (Refer to 9 - ENGINE COVER - INSTALLATION).

(48) Connect negative battery cable.

(49) Start engine and allow to warm. Turn engine off and inspect for leaks (Refer to 14 - FUEL SYSTEM - WARNING).

CAMSHAFT OIL SEAL(S)

REMOVAL

(1) Disconnect negative battery cable.

(2) Remove cooling fan and fan drive viscous clutch assembly (Refer to 7 - COOLING/ENGINE/FAN DRIVE VISCOUS CLUTCH - REMOVAL).

(3) Remove accessory drive belt (Refer to 7 - COOLING/ACCESSORY DRIVE/DRIVE BELTS - REMOVAL).

(4) Remove fan support (Refer to 7 - COOLING/ENGINE/RADIATOR FAN - REMOVAL).

(5) Remove vibration damper.

(6) Remove outer timing belt cover (Refer to 9 - ENGINE/VALVE TIMING/TIMING BELT / CHAIN COVER(S) - REMOVAL).

CAUTION: Before removing the timing belt the engine must rotated to 90° ATDC, or the 3 O'clock position. Failure to do so could result in valve and/or piston damage during reassembly. (Refer to 9 - ENGINE/VALVE TIMING - STANDARD PROCEDURE)

(7) Remove timing belt (Refer to 9 - ENGINE/VALVE TIMING/TIMING BELT/CHAIN AND SPROCKETS - REMOVAL).

(8) Using VM.1085, remove both camshaft gears (Fig. 48).

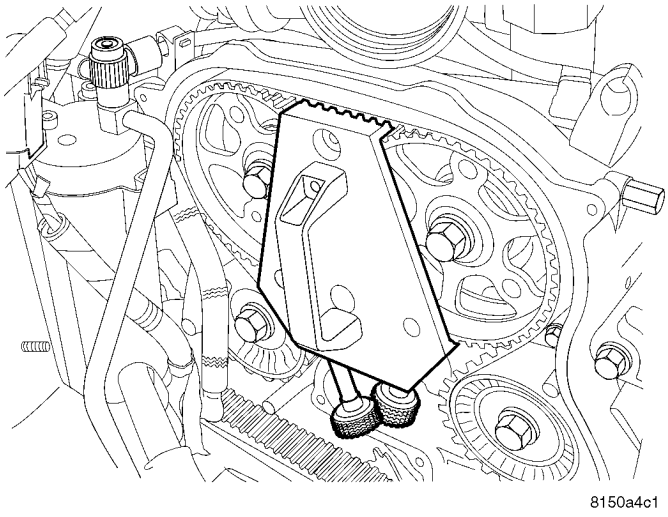

Fig. 48 VM.1085 CAMSHAFT LOCKING TOOL

(9) Remove both camshaft oil seals using special tool VM.1058.

CAMSHAFT OIL SEAL(S) (Continued)

INSTALLATION

(1) Install new camshaft oil seal using VM.1057.

(2) Install camshaft sprockets and tighten retaining bolts finger tight.

(3) Install timing belt (Refer to 9 - ENGINE/VALVE TIMING/TIMING BELT/CHAIN AND SPROCKETS - INSTALLATION) .

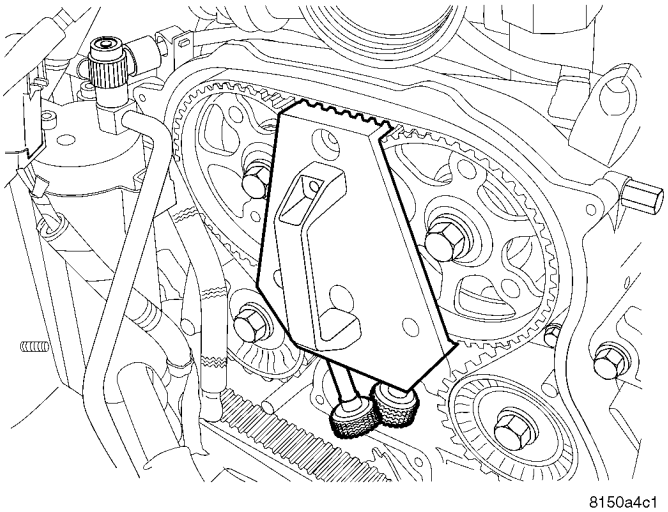

Fig. 49 VM.1085 CAMSHAFT LOCKING TOOL

(4) Torque camshaft sprockets to 108 N·m using VM.1085 to hold sprockets (Fig. 49).

(5) Install outer timing belt cover (Refer to 9 - ENGINE/VALVE TIMING/TIMING BELT / CHAIN COVER(S) - INSTALLATION).

(6) Install vibration damper.

(7) Install cooling fan support (Refer to 7 - COOLING/ENGINE/RADIATOR FAN - INSTALLATION).

(8) Install accessory drive belt (Refer to 7 - COOLING/ACCESSORY DRIVE/DRIVE BELTS - INSTALLATION).

(9) Install cooling fan and fan drive viscous clutch assembly (Refer to 7 - COOLING/ENGINE/FAN DRIVE VISCOUS CLUTCH - INSTALLATION).

(10) Connect negative battery cable.

CAMSHAFT(S)

DESCRIPTION

The camshafts are made of gray cast iron with eight machined lobes and four bearing journals (Fig. 50).

OPERATION

When the camshaft rotates the lobes actuate the hydraulic lifters and rocker arms, forcing downward on the rocker arms which opens the valves.

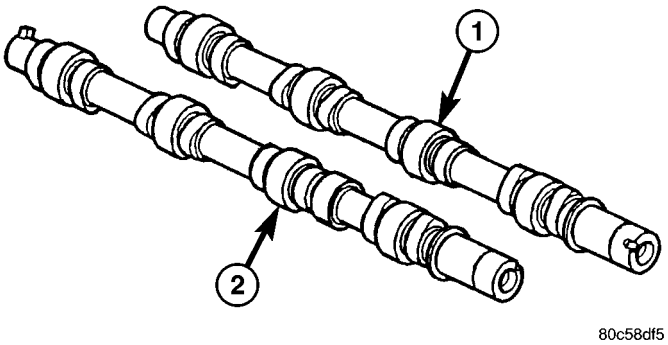

Fig. 50 CAMSHAFTS

1 - INTAKE CAMSHAFT
2 - EXHAUST CAMSHAFT

REMOVAL - CAMSHAFTS

(1) Disconnect negative battery cable.

(2) Remove engine cover and bracket (Refer to 9 - ENGINE - REMOVAL).

(3) Drain cooling system (Refer to 7 - COOLING/ENGINE/COOLANT - STANDARD PROCEDURE).

(4) Remove cooling fan and fan drive viscous clutch assembly (Refer to 7 - COOLING/ENGINE/FAN DRIVE VISCOUS CLUTCH - REMOVAL).

(5) Remove accessory drive belt (Refer to 7 - COOLING/ACCESSORY DRIVE/DRIVE BELTS - REMOVAL).

(6) Remove cooling fan support (Refer to 7 - COOLING/ENGINE/RADIATOR FAN - REMOVAL).

(7) Rotate the engine to 90 degrees ATDC (Refer to 9 - ENGINE/VALVE TIMING - STANDARD PROCEDURE).

(8) Remove vibration damper.

(9) Remove generator (Refer to 8 - ELECTRICAL/CHARGING/GENERATOR - REMOVAL).

CAUTION: Before removing the cylinder head cover/intake manifold or timing belt the engine must rotated to the 90° ATDC, or the 3 O'clock position. Failure to do so could result in valve and/or piston damage during reassembly. (Refer to 9 - ENGINE/VALVE TIMING - STANDARD PROCEDURE)

(10) Remove timing belt outer cover (Refer to 9 - ENGINE/VALVE TIMING/TIMING BELT / CHAIN COVER(S) - REMOVAL).

(11) Remove timing belt (Refer to 9 - ENGINE/VALVE TIMING/TIMING BELT/CHAIN AND SPROCKETS - REMOVAL).

(12) Remove timing belt inner cover (Refer to 9 - ENGINE/VALVE TIMING/TIMING BELT / CHAIN COVER(S) - REMOVAL).

(13) Remove cylinder head cover/intake manifold (Refer to 9 - ENGINE/CYLINDER HEAD/CYLINDER HEAD COVER(S) - REMOVAL).

CAMSHAFT(S) (Continued)

(14) With cylinder head cover/intake manifold on work bench, remove plugs at rear of cylinder head cover/intake manifold.

(15) Remove camshaft oil seals (Fig. 51).

(16) Remove snap ring and thrust washer from camshaft (Fig. 51).

(17) Slide camshaft through access hole at rear of cylinder head cover/intake manifold.

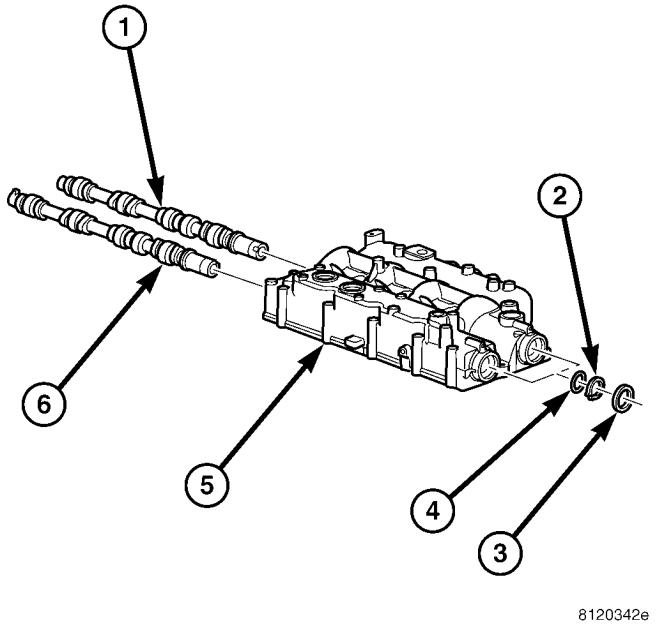

Fig. 51 CAMSHAFT ASSEMBLY

1 - INTAKE CAMSHAFT
2 - SNAPRING
3 - CAMSHAFT OIL SEAL
4 - THRUST WASHER
5 - CYLINDER HEAD COVER/INTAKE MANIFOLD
6 - EXHAUST MANIFOLD

INSTALLATION - CAMSHAFTS

(1) Lubricate camshafts with Mopar® Engine Oil Supplement, or equivalent.

(2) Carefully install camshafts into access holes in rear of cylinder head cover/intake manifold.

(3) Install thrust washer, snap ring, and camshaft oil seal (Fig. 51).

CHECKING CAMSHAFT ENDPLAY

(1) After camshafts are properly installed in cylinder head cover check end play of camshafts with a dial indicator. The end play should be between 0.10 mm - 0.55 mm.

NOTE: If the camshaft endplay is not within specification, measure thickness of the camshaft spacer. Camshaft spacer thickness should be 2.8 ± .02mm.

(4) Measure the camshaft end play with a dial indicator. The end play should be between 0.10 mm-0.55 mm.

(5) Install access hole plugs and gaskets at rear of cylinder head cover/intake manifold. Torque plugs to 80N·m.(59 ft. lbs.).

(6) Install cylinder head cover/intake manifold on engine block (Refer to 9 - ENGINE/CYLINDER HEAD/CYLINDER HEAD COVER(S) - INSTALLATION).

(7) Align the camshafts and install camshaft alignment pins, VM1052 and VM1053 into the camshaft cover.

(8) Install timing belt inner cover (Refer to 9 - ENGINE/VALVE TIMING/TIMING BELT / CHAIN COVER(S) - INSTALLATION).

NOTE: Crankshaft must be rotated to the 90 degree ATDC, or the 3 O'clock position (Refer to 9 - ENGINE/VALVE TIMING - STANDARD PROCEDURE).

(9) Install timing belt (Refer to 9 - ENGINE/VALVE TIMING/TIMING BELT/CHAIN AND SPROCKETS - INSTALLATION) .

(10) Install timing belt outer cover (Refer to 9 - ENGINE/VALVE TIMING/TIMING BELT / CHAIN COVER(S) - INSTALLATION).

(11) Install generator (Refer to 8 - ELECTRICAL/CHARGING/GENERATOR - INSTALLATION).

(12) Install vibration damper.

(13) Install cooling fan support (Refer to 7 - COOLING/ENGINE/RADIATOR FAN - INSTALLATION).

(14) Install accessory drive belt (Refer to 7 - COOLING/ACCESSORY DRIVE/DRIVE BELTS - INSTALLATION).

(15) Install cooling fan and fan drive viscous clutch assembly (Refer to 7 - COOLING/ENGINE/FAN DRIVE VISCOUS CLUTCH - INSTALLATION).

(16) Refill cooling system (Refer to 7 - COOLING/ENGINE/COOLANT - STANDARD PROCEDURE).

(17) Connect negative battery cable.

CYLINDER HEAD COVER

DESCRIPTION

The cylinder head cover and the intake manifold on this engine are made of cast aluminum. The cylinder head cover also incorporates a oil drain back hole for the crankcase ventilation (CCV) system. (Fig. 52).

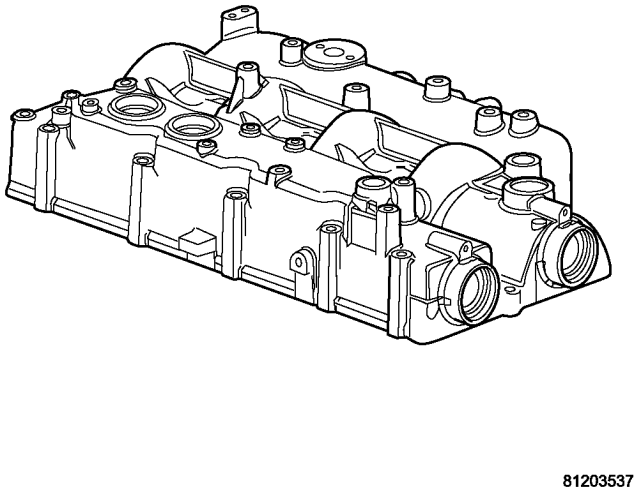

Fig. 52 CYLINDER HEAD COVER/INTAKE MANIFOLD

REMOVAL - CYLINDER HEAD COVER

CAUTION: Before removing the cylinder head cover/ intake manifold the witness mark on the crankshaft hub must rotated to the 3 O'clock position or, 90° ATDC to assure proper alignment of the camshafts and the crankshaft. Failure to do so could result in valve and/or piston damage during reassembly (Refer to 9 - ENGINE/VALVE TIMING - STANDARD PROCEDURE).

(1) Disconnect negative battery cable.

(2) Remove engine cover and bracket (Refer to 9 - ENGINE - REMOVAL).

(3) Remove the air cleaner housing (Refer to 9 - ENGINE/AIR INTAKE SYSTEM/AIR CLEANER HOUSING - REMOVAL).

(4) Drain cooling system (Refer to 7 - COOLING/ ENGINE/COOLANT - STANDARD PROCEDURE).

(5) Evacuate the air conditioning.

(6) Disconnect the coolant recovery hose at the radiator.

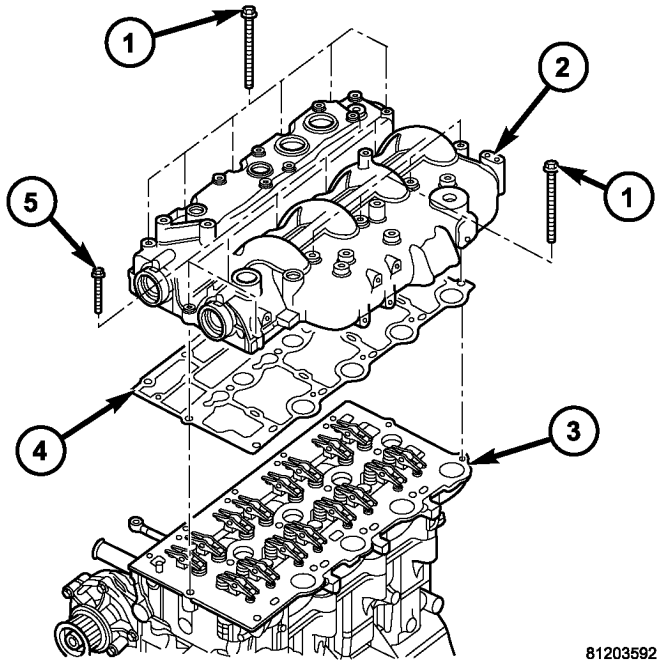

Fig. 53 CYLINDER HEAD COVER/INTAKE MANIFOLD ASSEMBLY

1 - CYLINDER HEAD COVER/INTAKE MANIFOLD BOLTS (LONG)
2 - CYLINDER HEAD COVER/INTAKE MANIFOLD
3 - CYLINDER HEAD
4 - CYLINDER HEAD COVER/INTAKE MANIFOLD GASKET
5 - CYLINDER HEAD COVER/INTAKE MANIFOLD BOLTS (SHORT)

(7) Remove the charge air inlet hose at the coolant module.

(8) Remove the upper radiator hose at the radiator.

(9) Separate the A/C hoses from the cooling fan shroud.

(10) Remove cooling fan and fan drive viscous drive assembly, along with the fan shroud (Refer to 7 - COOLING/ENGINE/FAN DRIVE VISCOUS CLUTCH - REMOVAL).

(11) Remove accessory drive belt (Refer to 7 - COOLING/ACCESSORY DRIVE/DRIVE BELTS - REMOVAL).

(12) Remove cooling fan support (Refer to 7 - COOLING/ENGINE/RADIATOR FAN - REMOVAL).

(13) Disconnect the EGR cooler pipe behind the inner timing cover.

(14) Remove generator (Refer to 8 - ELECTRICAL/ CHARGING/GENERATOR - REMOVAL), and generator rear support bracket.

(15) Remove the accessory drive belt Idler pulleys **L.H.Thread.**

(16) Remove the drive belt tensioner.

(17) Remove the power steering pump pulley.

(18) Remove the vibration damper.

CYLINDER HEAD COVER (Continued)

CAUTION: Before removing the cylinder head cover/ intake manifold the witness mark on the crankshaft hub must rotated to the 3 O'clock position or, 90° after TDC to assure proper alignment of the camshafts and the crankshaft. Failure to do so could result in valve and/or piston damage during reassembly.

(19) Rotate the crankshaft hub to 90° after TDC (3 O'clock position).

(20) Remove heater hose pipe fasteners.

NOTE: It may be necessary to rotate the camshaft gear bolt slightly to gain proper camshaft alignment pin seating against the intake manifold. Alignment pins must seat flush against the intake manifold.

(21) Install the intake camshaft locking pin VM.1052 and exhaust camshaft locking pin VM.1053 (Refer to 9 - ENGINE/VALVE TIMING - STANDARD PROCEDURE)

(22) Remove outer timing belt cover (Refer to 9 - ENGINE/VALVE TIMING/TIMING BELT / CHAIN COVER(S) - REMOVAL).

(23) Remove timing belt (Refer to 9 - ENGINE/ VALVE TIMING/TIMING BELT/CHAIN AND SPROCKETS - REMOVAL).

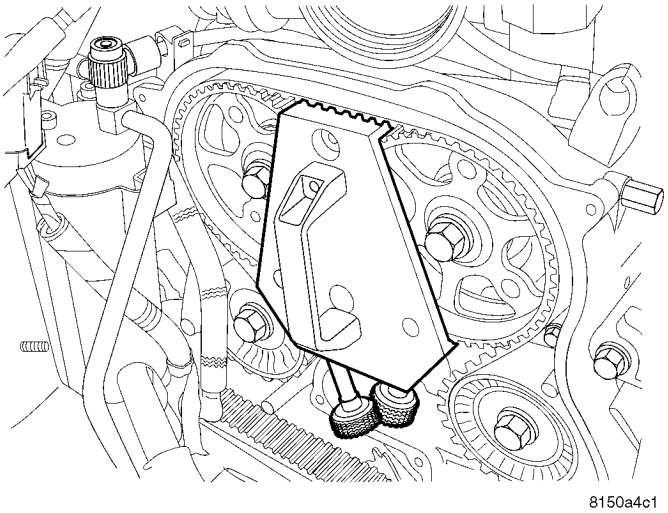

Fig. 54 VM.1085 CAMSHAFT LOCKING TOOL

(24) Install special tool VM.1085 and remove camshaft gears (Fig. 54).

(25) Remove timing belt idler pulleys **L.H.Thread.**

(26) Remove inner timing belt cover (Refer to 9 - ENGINE/VALVE TIMING/TIMING BELT / CHAIN COVER(S) - REMOVAL).

(27) Disconnect coolant temperature sensor, camshaft position sensor, boost pressure/intake air temperature sensor, fuel injectors, fuel temperature sensor, fuel rail solenoid, and EGR air flow electrical connectors.

(28) Disconnect the main engine harness connectors at the right inner fender well and position the harness over the left side of the engine and aside.

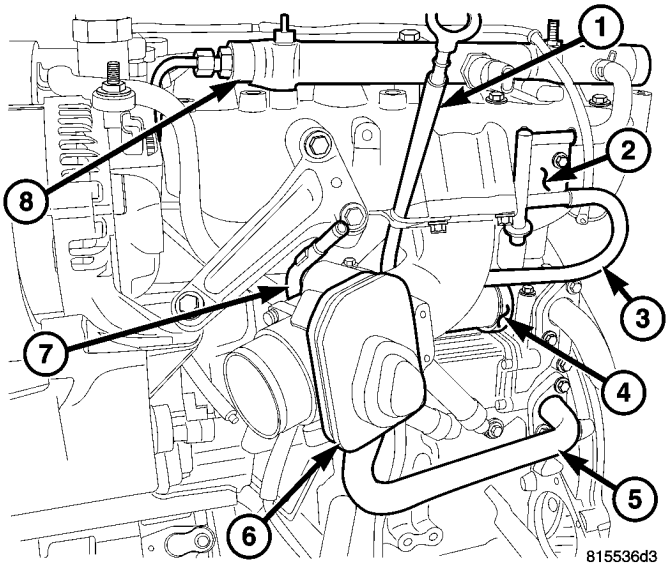

Fig. 55 EGR AIR CONTROL VALVE

1 - OIL LEVEL INDICATOR
2 - RETURN FUEL JUNCTION BLOCK
3 - RETURN FUEL FROM HIGH PRESSURE PUMP
4 - EGR VALVE
5 - EGR TUBE FROM EGR COOLER
6 - EGR AIR CONTROL VALVE
7 - BRAKE BOOSTER VACUUM TUBE
8 - FUEL RAIL

(29) Disconnect the brake booster vacuum pipe from the EGR air control valve (Fig. 55).

(30) Separate the main engine harness from the bracket on the EGR air control valve.

(31) Remove the EGR tube from the underside of the EGR air control valve (Fig. 55).

(32) Separate the block heater wiring harness from the oil level indicator tube.

(33) Remove the oil level indicator tube from the EGR air control valve (Fig. 55).

(34) Remove fuel injectors (Refer to 14 - FUEL SYSTEM/FUEL INJECTION/FUEL INJECTOR - REMOVAL).

(35) Remove fuel rail (Refer to 14 - FUEL SYSTEM/FUEL DELIVERY/FUEL RAIL - REMOVAL).

(36) Disconnect oil separator outlet hose at separator.

(37) Remove the oil separator from the intake manifold/cylinder head cover.

(38) Disconnect the return fuel junction block from the intake manifold/cylinder head cover.

(39) Remove cylinder head cover/intake manifold retaining bolts (Fig. 53).

CYLINDER HEAD COVER (Continued)

(40) Lift cylinder head cover/intake manifold from cylinder head (Fig. 53).

NOTE: When removing rocker arm and lifter assemblies, Always keep lifters in an upright position and in the order that they were removed from the cylinder head.

(41) Remove rocker arm and lifter assemblies from cylinder head.

(42) Remove cylinder head cover/intake manifold gasket from cylinder head.

INSTALLATION

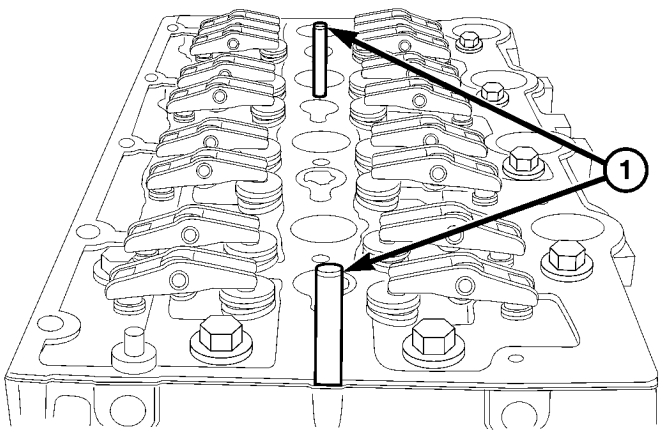

Fig. 56 #9673 ALIGNMENT STUDS

1 - #9673 ALIGNMENT STUDS

(1) Clean and inspect sealing surfaces.

(2) Install new gasket on cylinder head.

NOTE: Add a small amount of grease to the top of each valve to assist with rocker arm position retention.

(3) Install rocker arm and lifter assemblies in cylinder head. **Be sure to put rocker arm and lifter assemblies in same location as removed.**

(4) Install special tool #9673 intake manifold/cylinder head cover alignment studs (Fig. 56).

CAUTION: Care must be taken when installing the cylinder head cover/intake manifold. Do not dislodge the rocker arm(s) off of the valve stem(s) when installing the cover.

(5) Install cylinder head cover/intake manifold.

NOTE: Be sure to lubricate cylinder head cover/intake manifold retaining bolts with engine oil before assembly. If new bolts are being installed, DO NOT lubricate before assembly.

(6) Install two cylinder head cover/intake manifold retaining bolts and tighten finger tight.

(7) Remove the #9673 alignment studs (Fig. 56) and install remaining retaining bolts. Tighten retaining bolts finger tight.

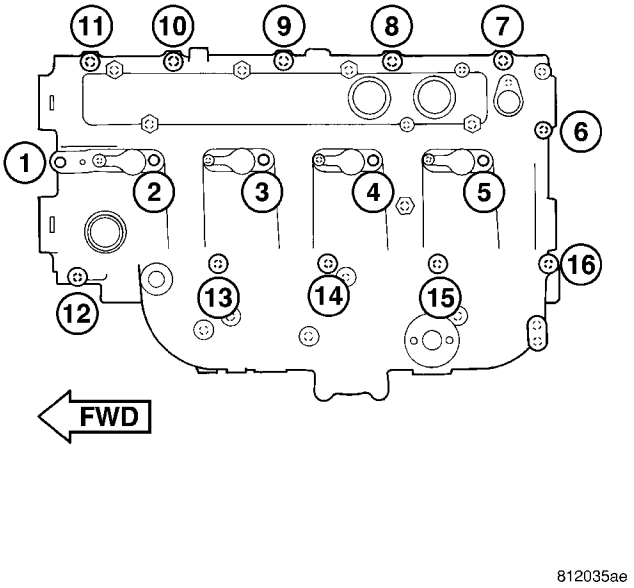

Fig. 57 CYLINDER HEAD COVER/INTAKE MANIFOLD TIGHTENING SEQUENCE

(8) Torque cylinder head cover/intake manifold retaining bolts following procedure below.

CYLINDER HEAD COVER/INTAKE MANIFOLD TIGHTENING PROCEDURE

- Alternate between bolts #11 and #16 to seat cylinder head cover/intake manifold on cylinder head (Fig. 57). Torque bolts to 7 N·m.
- Torque all cylinder head cover/intake manifold retaining bolts to 25 N·m in numerical order starting with #1 and ending with #16 (Fig. 57).

(9) Connect the fuel return junction block to the intake manifold/cylinder head cover (Fig. 58).

(10) Install the oil separator and outlet hose (Refer to 9 - ENGINE/LUBRICATION/OIL - INSTALLATION).

(11) Install the fuel rail (Refer to 14 - FUEL SYSTEM/FUEL DELIVERY/FUEL RAIL - INSTALLATION).

(12) Install fuel injectors and fuel injector supply lines (Refer to 14 - FUEL SYSTEM/FUEL INJECTION/FUEL INJECTOR - INSTALLATION).

CYLINDER HEAD COVER (Continued)

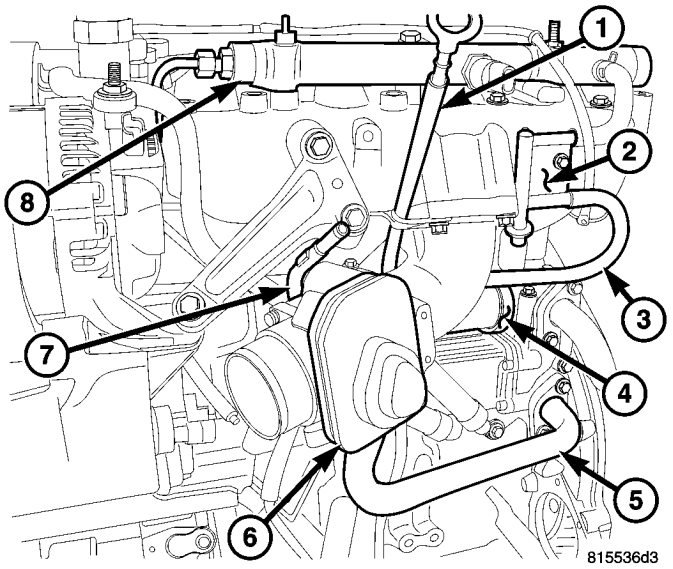

Fig. 58 EGR AIR CONTROL VALVE

1 - OIL LEVEL INDICATOR
2 - RETURN FUEL JUNCTION BLOCK
3 - RETURN FUEL FROM HIGH PRESSURE PUMP
4 - EGR VALVE
5 - EGR TUBE FROM EGR COOLER
6 - EGR AIR CONTROL VALVE
7 - BRAKE BOOSTER VACUUM TUBE
8 - FUEL RAIL

(13) Connect EGR tube at EGR air control valve. Torque clamp to 10.8 N·m. (Fig. 58)

(14) Install oil level indicator tube retaining bolt at intake manifold inlet. Torque bolt to 10 N·m.(88 in. lbs.) (Fig. 58).

(15) Install brake booster vacuum tube retaining bolt at intake manifold inlet. Torque bolt to 10 N·m.(88 in. lbs.) (Fig. 58).

(16) Install inner timing belt cover (Refer to 9 - ENGINE/VALVE TIMING/TIMING BELT / CHAIN COVER(S) - INSTALLATION).

(17) Install timing belt (Refer to 9 - ENGINE/ VALVE TIMING/TIMING BELT/CHAIN AND SPROCKETS - INSTALLATION) .

(18) Install outer timing belt cover (Refer to 9 - ENGINE/VALVE TIMING/TIMING BELT / CHAIN COVER(S) - INSTALLATION).

(19) Remove both camshaft locking pins (VM.1052,VM1053) and install plugs. (Refer to 9 - ENGINE/VALVE TIMING - STANDARD PROCEDURE).

(20) Install vibration damper (Refer to 9 - ENGINE/ENGINE BLOCK/VIBRATION DAMPER - INSTALLATION).

(21) Install the power steering pump pulley.

(22) Install the accessory drive belt tensioner

(23) Install the accessory drive belt pulleys **L.H.Thread.**

(24) Install generator (Refer to 8 - ELECTRICAL/ CHARGING/GENERATOR - INSTALLATION).

(25) Install cooling fan support (Refer to 7 - COOLING/ENGINE/RADIATOR FAN - INSTALLATION).

(26) Install accessory drive belt (Refer to 7 - COOLING/ACCESSORY DRIVE/DRIVE BELTS - INSTALLATION).

(27) Position heater hose pipe to intake manifold/ cylinder head cover and install fasteners.

(28) Position main engine wiring harness over the engine and connect the harness connectors at the right inner fender well.

(29) Connect camshaft position sensor, boost pressure/intake air temperature sensor, EGR solenoid, and fuel rail and pressure sensor electrical connectors.

(30) Install cooling fan, fan drive viscous clutch assembly and fan shroud (Refer to 7 - COOLING/ENGINE/FAN DRIVE VISCOUS CLUTCH - INSTALLATION).

(31) Route and connect the A/C hoses to fan shroud.

(32) Connect the radiator and charge air hoses.

(33) Connect the coolant recovery container hose to radiator.

(34) Refill cooling system (Refer to 7 - COOLING/ ENGINE/COOLANT - STANDARD PROCEDURE).

(35) Install the air cleaner housing.

(36) Install engine cover and bracket (Refer to 9 - ENGINE - INSTALLATION).

(37) Recharge A/C.

(38) Connect negative battery cable.

ROCKER ARMS

DESCRIPTION

The rocker arms are made of stamped steel and serviced as an assembly along with the lifter. The rocker arm also has a fracture point. This fracture point is designed to prevent engine failure if the engine is not timed properly or the timing belt breaks suddenly. (Fig. 59).

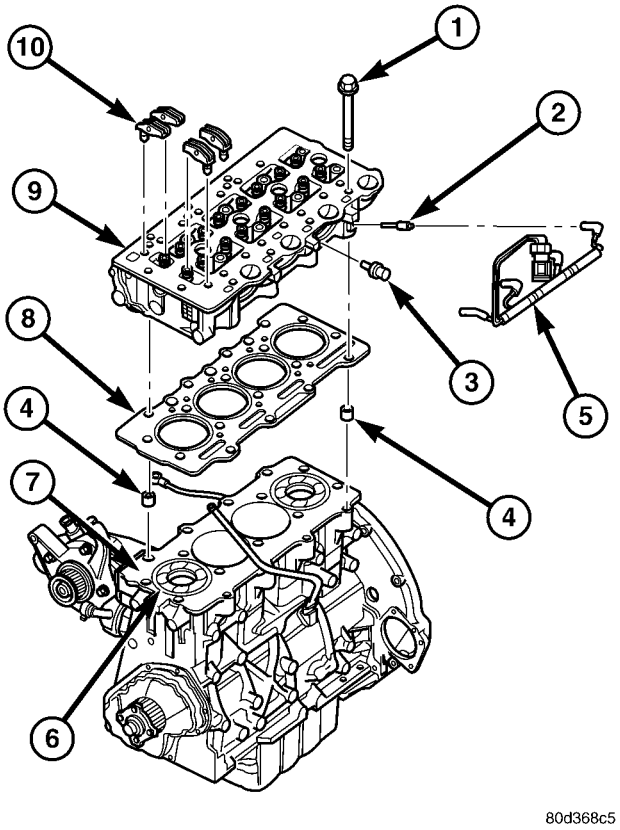

Fig. 59 CYLINDER HEAD ASSEMBLY

1 - CYLINDER HEAD BOLT
2 - GLOW PLUG
3 - COOLANT FITTING
4 - CYLINDER HEAD ALIGNMENT DOWEL
5 - GLOW PLUG HARNESS
6 - CYLINDER LINER
7 - CYLINDER BLOCK
8 - CYLINDER HEAD GASKET
9 - CYLINDER HEAD
10 - ROCKER ARM ASSEMBLIES

OPERATION

The rocker arms are used as a link between the camshaft and valves. As the camshaft rotates, the lobes of the camshafts apply downward pressure on the rocker arms. This pressure is then transmitted to the valves which causes the valves to open.

REMOVAL

CAUTION: Before removing the cylinder head cover/ intake manifold the engine must rotated to 90° after TDC to assure proper alignment of the engine timing components. Failure to do so could result in valve and/or piston damage during reassembly. (Refer to 9 - ENGINE/VALVE TIMING - STANDARD PROCEDURE)

(1) Disconnect negative battery cable.
(2) Drain cooling system (Refer to 7 - COOLING/ ENGINE/COOLANT - STANDARD PROCEDURE).
(3) Remove cooling fan and fan drive viscous clutch assembly (Refer to 7 - COOLING/ENGINE/ FAN DRIVE VISCOUS CLUTCH - REMOVAL).
(4) Remove accessory drive belt (Refer to 7 - COOLING/ACCESSORY DRIVE/DRIVE BELTS - REMOVAL).
(5) Remove the vibration damper.
(6) Remove cooling fan support (Refer to 7 - COOLING/ENGINE/RADIATOR FAN - REMOVAL).
(7) Remove the power steering pump pulley.
(8) Rotate the crankshaft to 90 degrees ATDC (Refer to 9 - ENGINE/VALVE TIMING - STANDARD PROCEDURE).
(9) Remove outer timing belt cover (Refer to 9 - ENGINE/VALVE TIMING/TIMING BELT / CHAIN COVER(S) - REMOVAL).
(10) Remove timing belt (Refer to 9 - ENGINE/ VALVE TIMING/TIMING BELT/CHAIN AND SPROCKETS - REMOVAL).
(11) Remove inner timing belt cover (Refer to 9 - ENGINE/VALVE TIMING/TIMING BELT / CHAIN COVER(S) - REMOVAL).
(12) Remove cylinder head cover/intake manifold (Refer to 9 - ENGINE/CYLINDER HEAD/CYLINDER HEAD COVER(S) - REMOVAL).

NOTE: Lifters must be kept in order of removal and stored in the up right position.

(13) Remove rocker arms and lifters (Fig. 60).

INSTALLATION

(1) Clean and inspect gasket sealing surfaces.
(2) Install new gasket on cylinder head.
(3) Lubricate lifter ball end of lifter(s), valve(s), and rocker arm roller(s) with Mopar® Engine Oil Supplement or equivlalent.

NOTE: Add a small amount of grease to the tip of each valve to assist with rocker arm positioning.

(4) Connect rocker arm(s) to lifter and position on valve(s).

ROCKER ARMS (Continued)

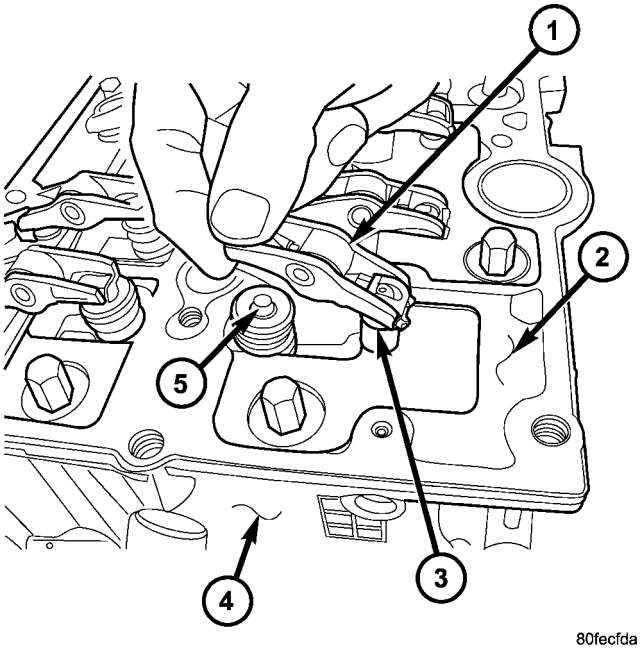

Fig. 60 ROCKER ARM ASSEMBLY

1 - ROCKER ARM ASSEMBLY
2 - CYLINDER HEAD COVER/INTAKE MANIFOLD
3 - HYDRAULIC LIFTER
4 - CYLINDER HEAD
5 - VALVE

NOTE: Care must be taken when installing the cylinder head cover/intake manifold. Failure to align the cover correctly may dislodge the rocker arm(s) from the valve stem.

(5) Install cylinder head cover/intake manifold (Refer to 9 - ENGINE/CYLINDER HEAD/CYLINDER HEAD COVER(S) - INSTALLATION).

(6) Install inner timing belt cover (Refer to 9 - ENGINE/VALVE TIMING/TIMING BELT / CHAIN COVER(S) - INSTALLATION).

NOTE: Rotate the crankshaft to the 90 degree ATDC position (Refer to 9 - ENGINE/VALVE TIMING - STANDARD PROCEDURE).

(7) Install timing belt (Refer to 9 - ENGINE/VALVE TIMING/TIMING BELT/CHAIN AND SPROCKETS - INSTALLATION) .

(8) Install outer timing belt cover (Refer to 9 - ENGINE/VALVE TIMING/TIMING BELT / CHAIN COVER(S) - INSTALLATION).

(9) Install the power steering pump pulley.

(10) Install vibration damper.

(11) Install cooling fan support (Refer to 7 - COOLING/ENGINE/RADIATOR FAN - INSTALLATION).

(12) Install accessory drive belt (Refer to 7 - COOLING/ACCESSORY DRIVE/DRIVE BELTS - INSTALLATION).

(13) Install cooling fan and fan drive viscous clutch assembly (Refer to 7 - COOLING/ENGINE/FAN DRIVE VISCOUS CLUTCH - INSTALLATION).

(14) Refill cooling system (Refer to 7 - COOLING/ENGINE/COOLANT - STANDARD PROCEDURE).

(15) Connect negative battery cable.

HYDRAULIC LIFTERS

DESCRIPTION

Valve lash is controlled by hydraulic tappets located inside the cylinder head, in tappet bores below the camshafts (Fig. 61).

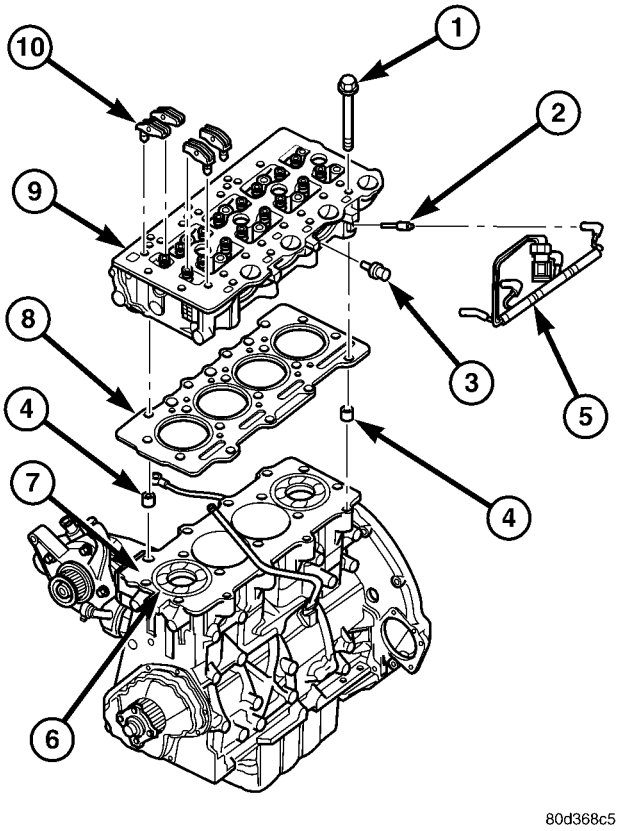

Fig. 61 CYLINDER HEAD ASSEMBLY

1 - CYLINDER HEAD BOLT
2 - GLOW PLUG
3 - COOLANT TEMPERATURE SENSOR
4 - CYLINDER HEAD ALIGNMENT DOWEL
5 - GLOW PLUG HARNESS
6 - CYLINDER LINER
7 - CYLINDER BLOCK
8 - CYLINDER HEAD GASKET
9 - CYLINDER HEAD
10 - ROCKER ARM ASSEMBLIES

REMOVAL

(1) (Refer to 9 - ENGINE/CYLINDER HEAD/ROCKER ARM / ADJUSTER ASSY - REMOVAL)

HYDRAULIC LIFTERS (Continued)

INSPECTION

Clean each lifter assembly in cleaning solvent to remove all varnish and sludge deposits. Inspect for indications of scuffing on the side and base of each lifter body.

INSTALLATION

(1) (Refer to 9 - ENGINE/CYLINDER HEAD/ ROCKER ARM / ADJUSTER ASSY - INSTALLATION)

ENGINE BLOCK

DESCRIPTION

The 2.8L CRD Diesel engine uses a cast iron engine block with wet cast iron cylinder liners (Fig. 62). The cylinder block has increased stiffness that reduces structural flexing and a fractured connecting rod cap design that can not distort connecting rod cap fit.

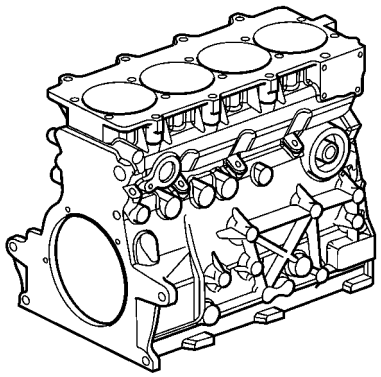

Fig. 62 ENGINE BLOCK 2.8L

CRANKSHAFT

DESCRIPTION

The crankshaft for the 2.8L is a forged steel type design with five main bearing journals. The crankshaft is located at the bottom of the engine block and is held in place with three main bearing supports (Fig. 63)

OPERATION

The crankshaft transfers force generated by combustion within the cylinder bores to the flexplate.

STANDARD PROCEDURE - CHECKING CRANKSHAFT END PLAY

(1) Mount a dial indicator to a stationary point at rear of engine. Locate the probe perpendicular against the flywheel (Fig. 64).

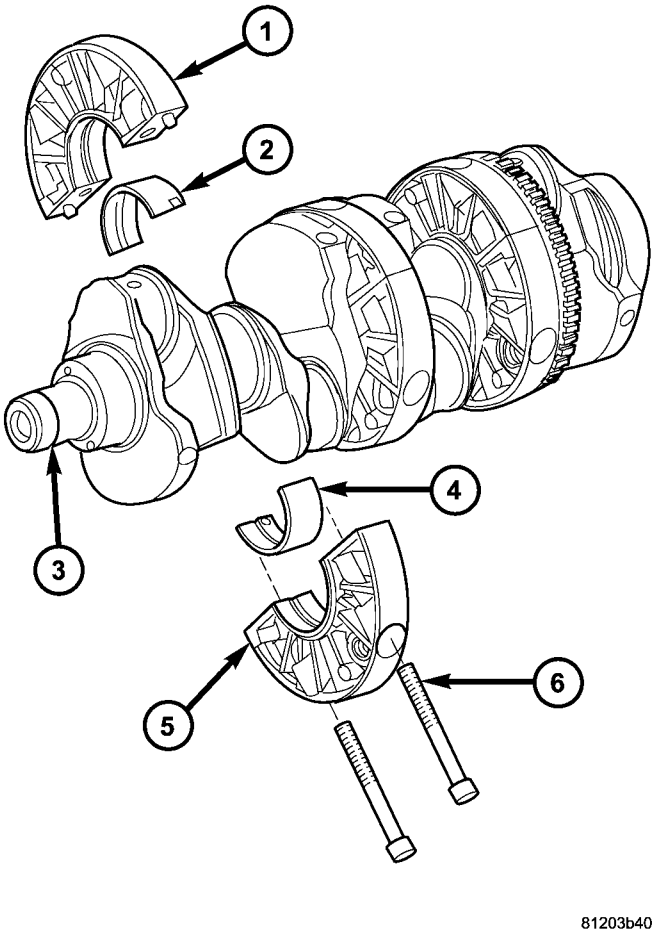

Fig. 63 2.8L CRANKSHAFT

1 - CRANKSHAFT SUPPORT HALVE
2 - MAIN BEARING HALVE
3 - GROOVE
4 - MAIN BEARING HALVE
5 - CRANKSHAFT SUPPORT HALVE
6 - MAIN BEARING SUPPORT BOLTS

(2) Move the crankshaft all the way to the front of its travel.

(3) Zero the dial indicator.

(4) Move the crankshaft all the way to the rear and read dial indicator. For crankshaft end play clearances (Refer to 9 - ENGINE - SPECIFICATIONS).

REMOVAL - CRANKSHAFT

NOTE: The crankshaft is removed from the rear of the engine. Make sure to use an appropriate engine stand.

(1) Remove engine from vehicle (Refer to 9 - ENGINE - REMOVAL).

(2) Mount engine on an engine stand.

(3) Drain engine oil and remove oil filter.

CRANKSHAFT (Continued)

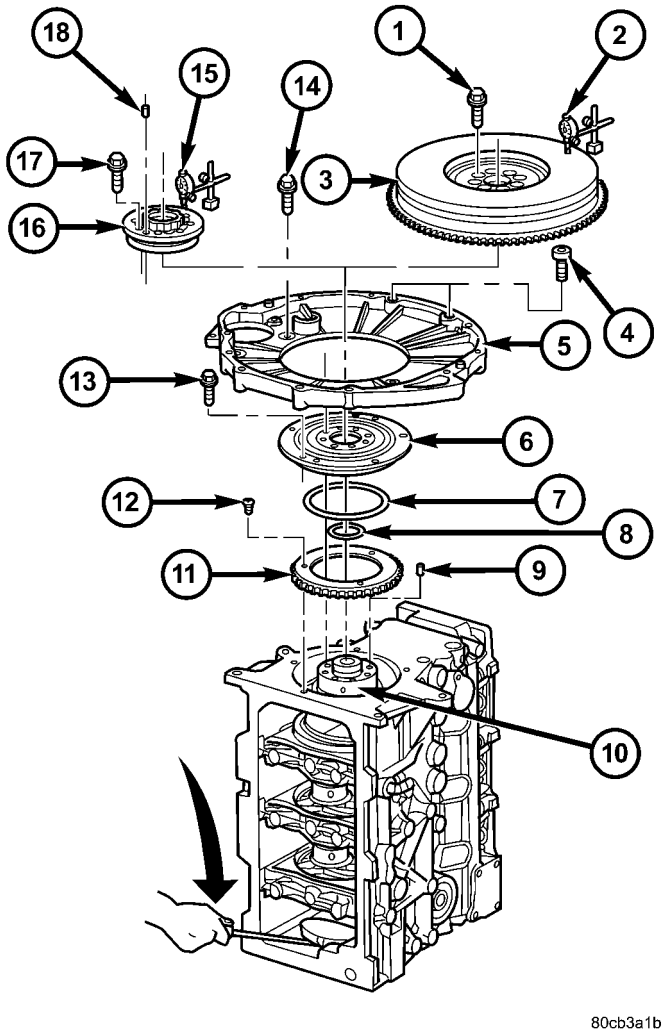

Fig. 64 CHECKING CRANKSHAFT ENDPLAY

1 - FLYWHEEL RETAINING BOLTS
2 - DIAL INDICATOR
3 - FLYWHEEL
4 - TRANSMISSION ADAPTER PLATE BOLT
5 - TRANSMISSION ADAPTER PLATE
6 - REAR MAIN BEARING SUPPORT
7 - O-RING
8 - O-RING
9 - ALIGNMENT DOWEL
10 - CRANKSHAFT
11 - RELUCTOR WHEEL
12 - RELUCTOR WHEEL RETAINING BOLTS
13 - REAR MAIN BEARING SUPPORT RETAINING BOLTS
14 - TRANSMISSION ADAPTER PLATE BOLT
15 - DIAL INDICATOR
16 - FLEXPLATE ADAPTER
17 - FLEXPLATE ADAPTER RETAINING BOLTS
18 - ALIGNMENT DOWEL

(4) Remove timing belt outer cover (Refer to 9 - ENGINE/VALVE TIMING/TIMING BELT / CHAIN COVER(S) - REMOVAL).

(5) Remove timing belt (Refer to 9 - ENGINE/VALVE TIMING/TIMING BELT/CHAIN AND SPROCKETS - REMOVAL).

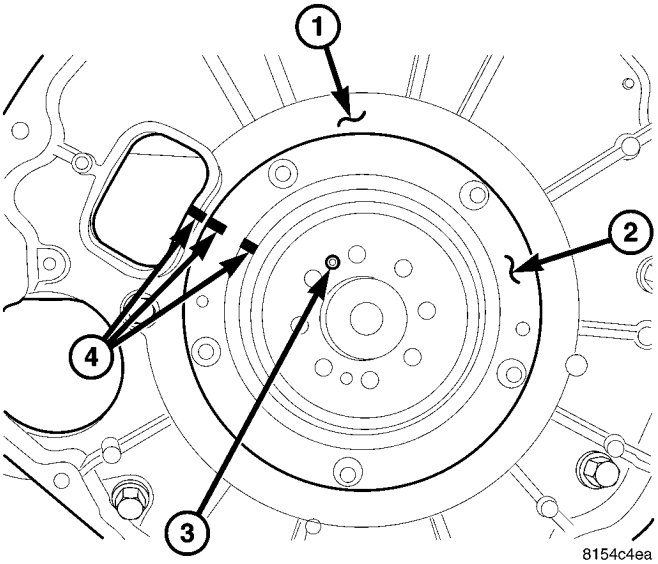

Fig. 65 ADAPTOR PLATE

1 - ADAPTOR PLATE
2 - REAR CRANKSHAFT SUPPORT
3 - DOWEL PIN
4 - PAINT OR SCRIBE MARK

(6) Remove timing belt inner cover (Refer to 9 - ENGINE/VALVE TIMING/TIMING BELT / CHAIN COVER(S) - REMOVAL).

(7) Remove cylinder head cover/intake manifold (Refer to 9 - ENGINE/CYLINDER HEAD/CYLINDER HEAD COVER(S) - REMOVAL).

(8) Remove cylinder head (Refer to 9 - ENGINE/CYLINDER HEAD - REMOVAL).

(9) Remove flex plate.

NOTE: Paint marking or scribing will assist in properly assembling and aligning oil passage ports in the crankshaft supports and engine block.

(10) Paint mark or scribe the relation of the rear main bearing support and adaptor plate (Fig. 65).

NOTE: One of the crankshaft position sensor heat shield fasteners will have to be removed to free the adaptor plate for removal.

(11) Remove rear main bearing support/adapter plate retaining bolts and remove adapter plate (Fig. 66).

(12) Paint mark or scribe the rear main bearing support to engine block relation once the adaptor plate is removed.

CRANKSHAFT (Continued)

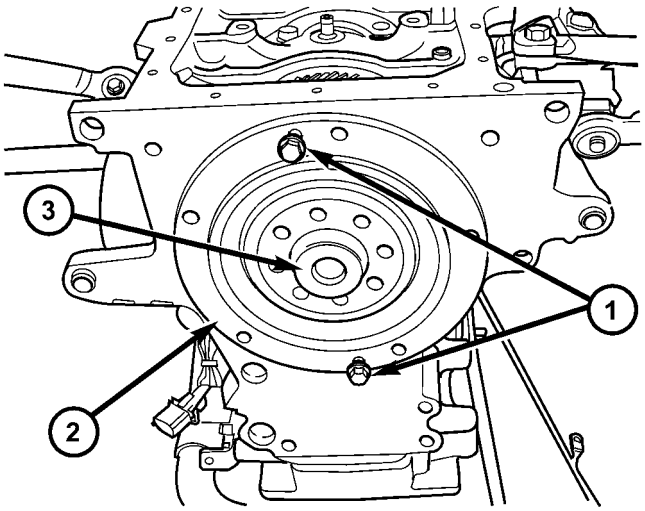

Fig. 66 REAR MAIN BEARING SUPPORT REMOVAL

1 - BOLTS
2 - REAR MAIN BEARING SUPPORT
3 - CRANKSHAFT

(13) Remove rear main bearing support by threading two retaining bolts in holes provided. Tighten bolts equally to push main bearing support out of block (Fig. 66).

(14) Remove front engine cover (Refer to 9 - ENGINE/ENGINE BLOCK/ENGINE COVER - REMOVAL).

(15) Paint mark or scribe the crankshaft gear to vacuum pump and oil pump drive gears (Fig. 67).

(16) Remove crankshaft sprocket (Fig. 67).

(17) Remove oil pan (Refer to 9 - ENGINE/LUBRICATION/OIL PAN - REMOVAL).

(18) Remove oil pump pickup tube (Refer to 9 - ENGINE/LUBRICATION/OIL PUMP - REMOVAL).

(19) Remove balance shaft assembly (Refer to 9 - ENGINE/VALVE TIMING/BALANCE SHAFT - REMOVAL).

(20) Remove oil jets (Refer to 9 - ENGINE/LUBRICATION/OIL JET - REMOVAL).

(21) Remove piston and connecting rod assemblies (Refer to 9 - ENGINE/ENGINE BLOCK/PISTON & CONNECTING ROD - REMOVAL).

(22) Slide special tool VM.1069 on the front of the crankshaft (Fig. 68).

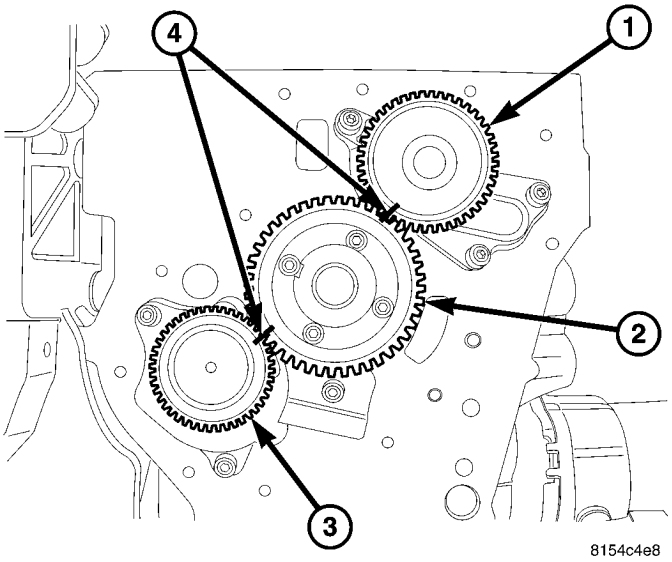

Fig. 67 CRANKSHAFT GEAR

1 - OIL PUMP GEAR
2 - CRANKSHAFT GEAR
3 - VACUUM PUMP GEAR

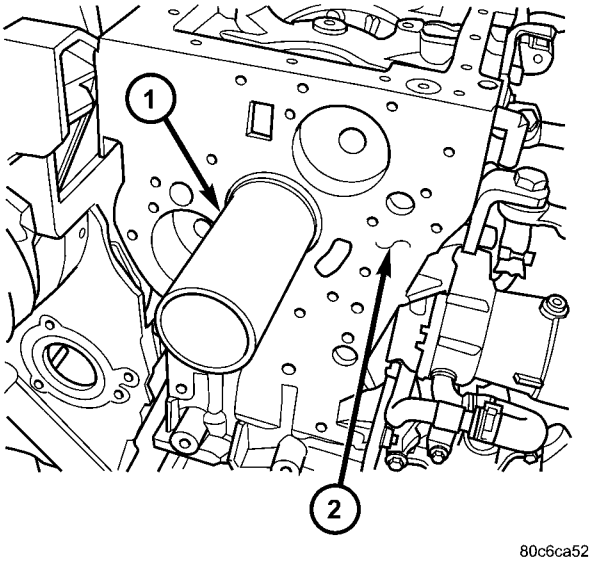

Fig. 68 CRANKSHAFT SLEEVE VM.1069

1 - CRANKSHAFT SLEEVE VM.1069
2 - ENGINE BLOCK

CAUTION: Failure to properly identify and align each crankshaft support will result in improperly aligned engine oil passages which will lead to engine failure.

CRANKSHAFT (Continued)

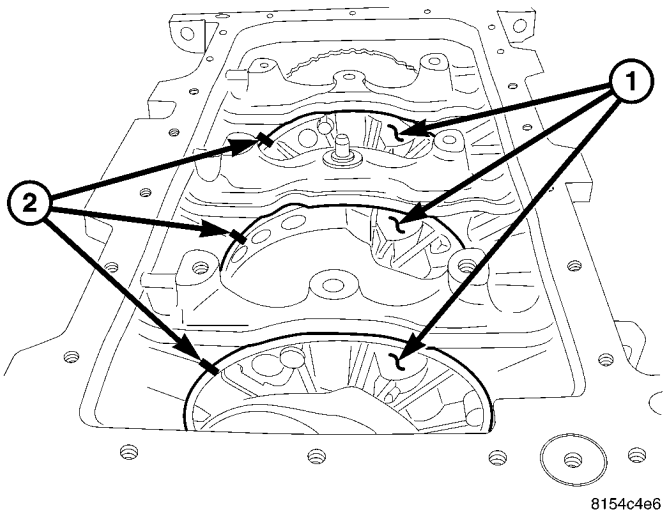

Fig. 69 PAINT MARK CRANKSHAFT SUPPORTS

1 - CRANKSHAFT SUPPORTS
2 - PAINT OR SCRIBE WITNESS MARKS

(23) Paint mark or scribe each crankshaft support to engine block relation (Fig. 69).

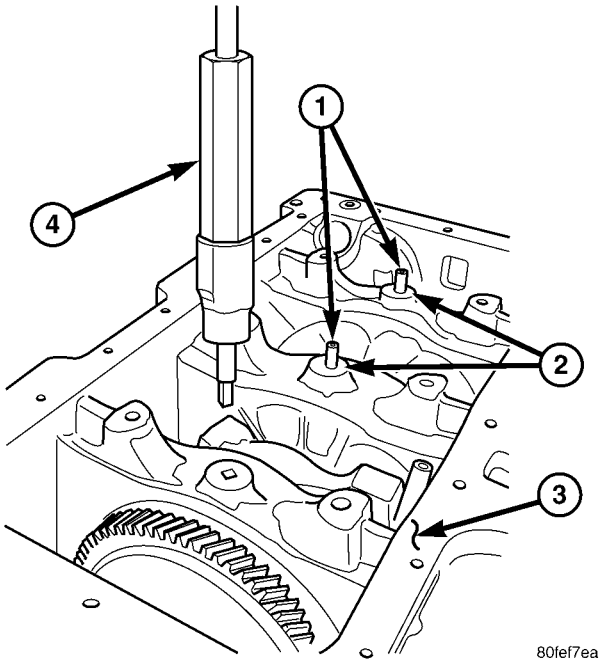

Fig. 70 CRANKSHAFT SUPPORT RETAINERS/ BALANCE SHAFT OIL FEED

1 - CRANKSHAFT SUPPORT RETAINERS/BALANCE SHAFT OIL FEED
2 - O-RINGS (3)
3 - ENGINE BLOCK
4 - CRANKSHAFT SUPPORT RETAINER/BALANCE SHAFT OIL FEED REMOVER - INSTALLER VM.1054

(24) Using special tool VM.1054, remove crankshaft support retainers and o-rings, discard o-rings. (Fig. 70).

(25) Paint mark or scribe the relation between the crankshaft sensor tone ring and the crankshaft and remove the tone ring.

(26) While holding crankshaft guide VM 1069, carefully guide crankshaft out of the rear of engine block.

INSTALLATION - CRANKSHAFT

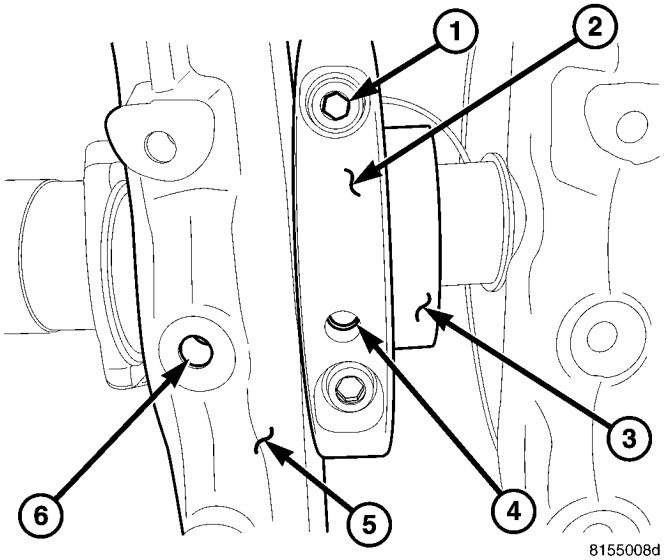

Fig. 71 CRANKSHAFT SUPPORT OIL PASSAGE ALIGNMENT

1 - CRANKSHAFT SUPPORT BOLT HEAD
2 - CRANKSHAFT SUPPORT
3 - CRANKSHAFT
4 - OIL PASSAGE SHOULDER INSIDE SUPPORT
5 - ENGINE BLOCK STRUCTURAL SUPPORT
6 - CRANKSHAFT SUPPORT ALIGNMENT ACCESS/BALANCE SHAFT OIL PASSAGE

CAUTION: IT IS CRITICAL THAT BOTH HALVES OF THE CRANKSHAFT SUPPORT ARE ALIGNED PROPERLY WITH THE ENGINE TO SUPPORT ENGINE OIL MANAGEMENT.

(1) Assure that all crankshaft support witness marks are pointing toward the front of the engine and install special tool VM.1069 onto the front of the crankshaft (Refer to 9 - ENGINE/ENGINE BLOCK/ CRANKSHAFT MAIN BEARINGS - INSTALLATION).

CAUTION: If installing a new crankshaft support retainer, there are two oil passages in the crankshaft carrier. One of the passages has an internal shoulder, that once aligned properly, is used for installing the crankshaft support retainer/balance shaft oil supply.

CRANKSHAFT (Continued)

(2) Identify the correct positioning of the crankshaft support oil passage. The bolt heads for the crankshaft support retainers should be facing toward the balance shaft (Fig. 71).

(3) Carefully guide the crankshaft into the engine block, aligning the crankshaft support(s) to engine block witness marks. This will align the crankshaft support oil passages with the crankshaft support retainer access hole(s) (Fig. 71).

(4) Insert and seat the crankshaft support retainers with new o-rings.

(5) Remove special tool VM.1069 from crankshaft (Fig. 68).

(6) Align the crankshaft sensor tone ring witness marks with the crankshaft and install the crankshaft sensor tone ring. Tighten fasteners to 14.6N·m (124 in. lbs.).

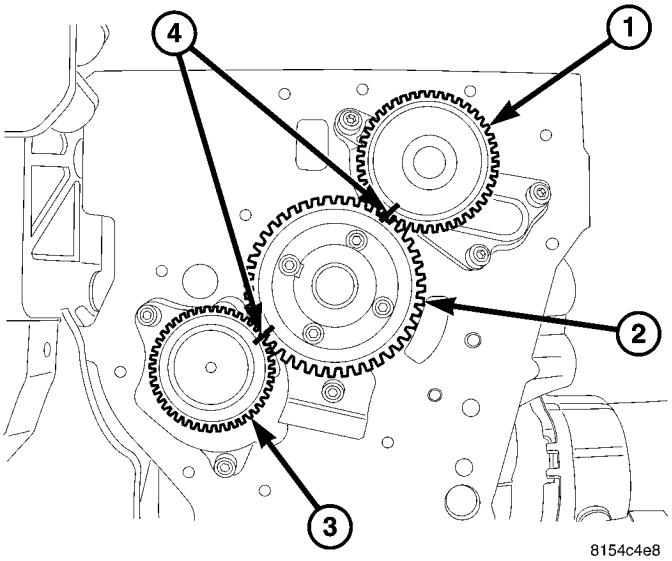

Fig. 72 CRANKSHAFT GEAR

1 - OIL PUMP GEAR
2 - CRANKSHAFT GEAR
3 - VACUUM PUMP GEAR

(7) Install crankshaft gear (Fig. 72).

(8) Install front engine cover (Refer to 9 - ENGINE/ENGINE BLOCK/ENGINE COVER - INSTALLATION).

(9) Install rear main bearing support in engine block aligning witness marks with the engine block **Be sure to align oil hole in rear main bearing support with the lubrication port in the engine block.**

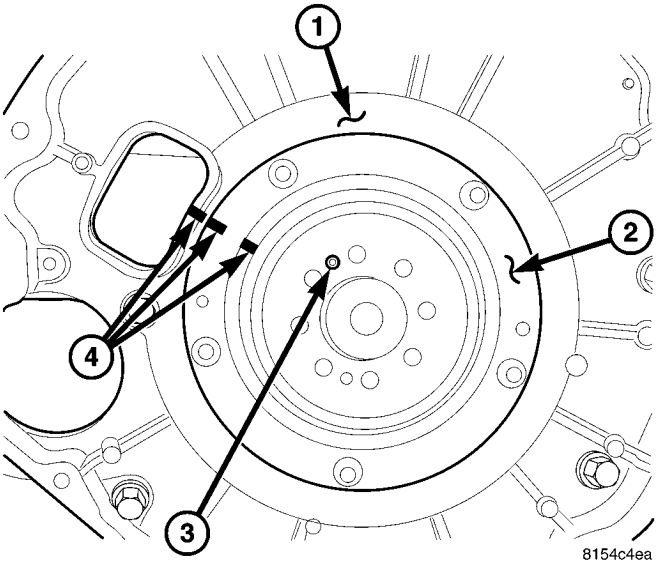

Fig. 73 ADAPTOR PLATE

1 - ADAPTOR PLATE
2 - REAR CRANKSHAFT SUPPORT
3 - DOWEL PIN
4 - PAINT OR SCRIBE MARK

(10) Install adapter plate and retaining bolts. Torque bolts to 45.1 N·m (33 ft. lbs.) and screws to 78.5 N·m (58 ft. lbs.). (Fig. 73).

(11) Install flex plate (Refer to 9 - ENGINE/ENGINE BLOCK/FLEX PLATE - INSTALLATION).

(12) Install piston and connecting rod assemblies (Refer to 9 - ENGINE/ENGINE BLOCK/PISTON & CONNECTING ROD - INSTALLATION).

(13) Install oil jets (Refer to 9 - ENGINE/LUBRICATION/OIL JET - INSTALLATION).

(14) Install balance shaft assembly (Refer to 9 - ENGINE/VALVE TIMING/BALANCE SHAFT - INSTALLATION).

(15) Install oil pump pickup tube (Refer to 9 - ENGINE/LUBRICATION/OIL PUMP - INSTALLATION).

(16) Install oil pan (Refer to 9 - ENGINE/LUBRICATION/OIL PAN - INSTALLATION).

(17) Install cylinder head (Refer to 9 - ENGINE/CYLINDER HEAD - INSTALLATION).

(18) Install cylinder head cover/intake manifold (Refer to 9 - ENGINE/CYLINDER HEAD/CYLINDER HEAD COVER(S) - INSTALLATION).

CRANKSHAFT (Continued)

(19) Install timing belt inner cover (Refer to 9 - ENGINE/VALVE TIMING/TIMING BELT / CHAIN COVER(S) - INSTALLATION).

(20) Install timing belt (Refer to 9 - ENGINE/ VALVE TIMING/TIMING BELT/CHAIN AND SPROCKETS - INSTALLATION) .

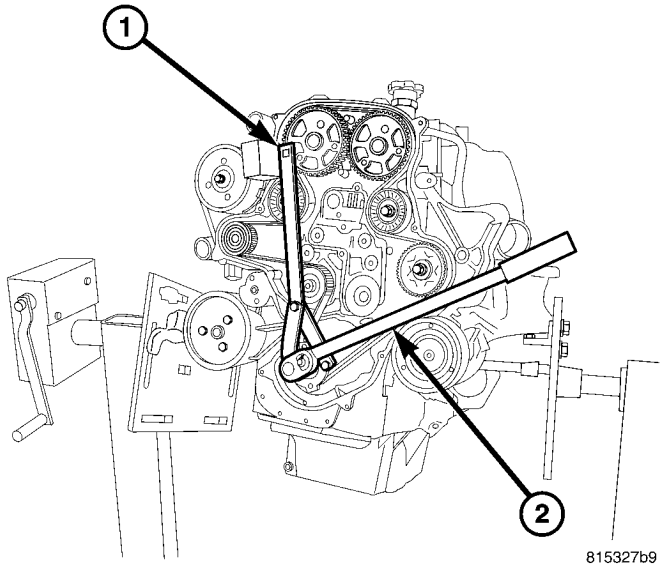

Fig. 74 SPECIAL TOOL #6958

1 - SPECIAL TOOL # 6958
2 - WRENCH

(21) Connect special tool 6958 to the crankshaft hub. Tighten fastener to 304 N·m (203 ft. lbs.) (Fig. 74).

(22) Install timing belt outer cover (Refer to 9 - ENGINE/VALVE TIMING/TIMING BELT / CHAIN COVER(S) - INSTALLATION).

(23) Install engine in vehicle.

(24) Fill engine oil with proper oil to correct level (Refer to LUBRICATION & MAINTENANCE/FLUID TYPES - SPECIFICATIONS).

CRANKSHAFT MAIN BEARINGS

REMOVAL

NOTE: The crankshaft support halves can be identified by aligning the witness marks scribed on the face, located between the halves. These witness marks must face towards the front of the engine when installing the crankshaft and support assembly.

The engine must be removed from vehicle and completely disassembled to replace the front main bearing.

CRANKSHAFT MAIN BEARINGS

(1) With crankshaft assembly removed from engine.

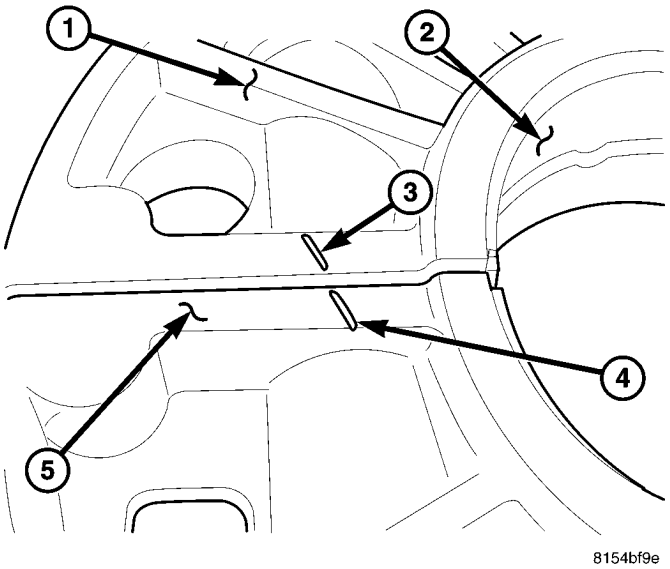

Fig. 75 CRANKSHAFT SUPPORT WITNESS MARKS

1 - UPPER CRANKSHAFT SUPPORT HALF
2 - CRANKSHAFT MAIN BEARING
3 - WITNESS MARK
4 - WITNESS MARK
5 - LOWER CRANKSHAFT SUPPORT HALF

(2) Identify the crankshaft support witness marks (Fig. 75).

(3) Remove crankshaft supports from crankshaft and remove bearing halves from supports (Fig. 76).

CRANKSHAFT FRONT MAIN BEARING

(1) Using special tool VM.1073 push front main bearing out of front of engine block (Fig. 77).

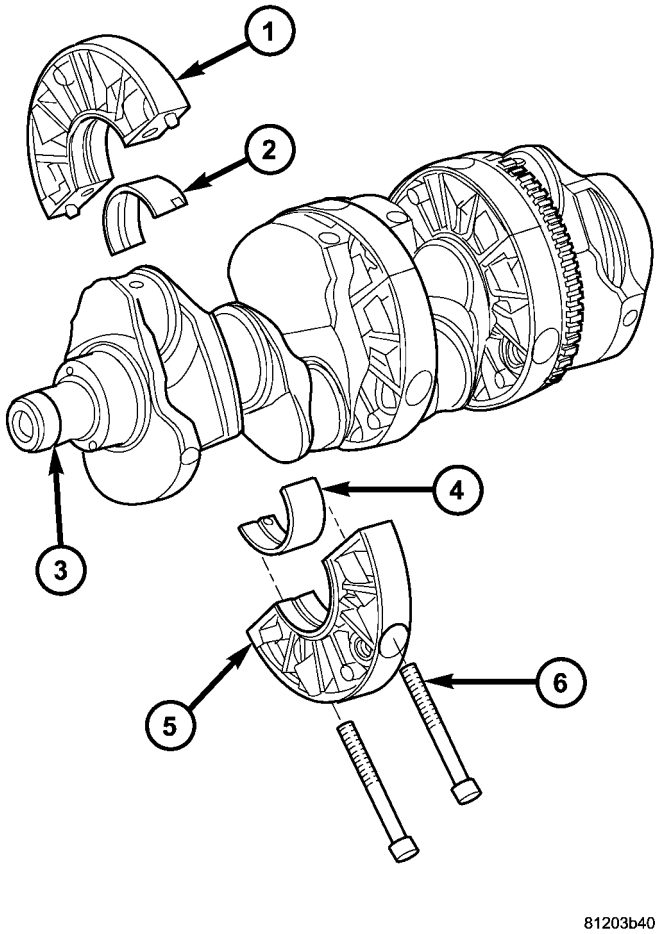

Fig. 76 2.8L CRANKSHAFT

1 - CRANKSHAFT SUPPORT HALVE
2 - MAIN BEARING HALVE
3 - GROOVE
4 - MAIN BEARING HALVE
5 - CRANKSHAFT SUPPORT HALVE
6 - MAIN BEARING SUPPORT BOLTS

INSTALLATION

CRANKSHAFT MAIN BEARINGS

NOTE: Identify the correct crankshaft by noting the groove on the front of the 2.8L crankshaft.

(1) Identify the crankshaft support witness marks and install bearing halves in crankshaft supports (Fig. 78).

(2) Lubricate crankshaft and main bearings with clean engine oil.

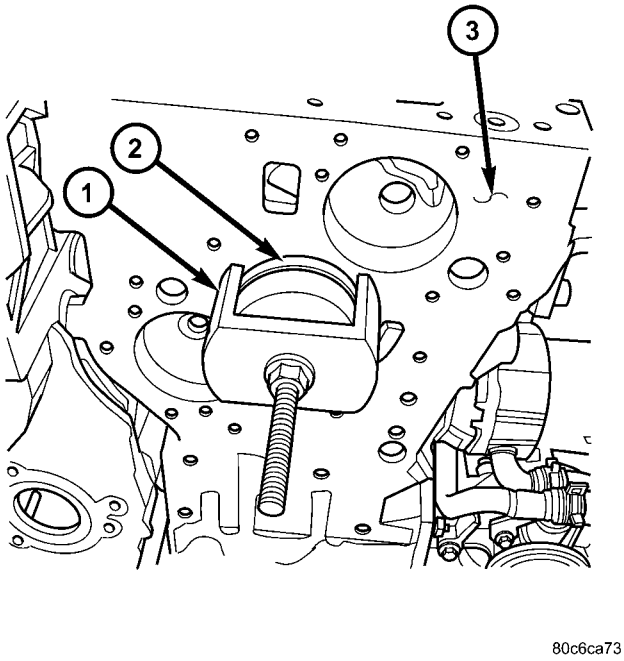

Fig. 77 FRONT MAIN BEARING REMOVAL

1 - VM.1073
2 - FRONT CRANKSHAFT MAIN BEARING
3 - ENGINE BLOCK

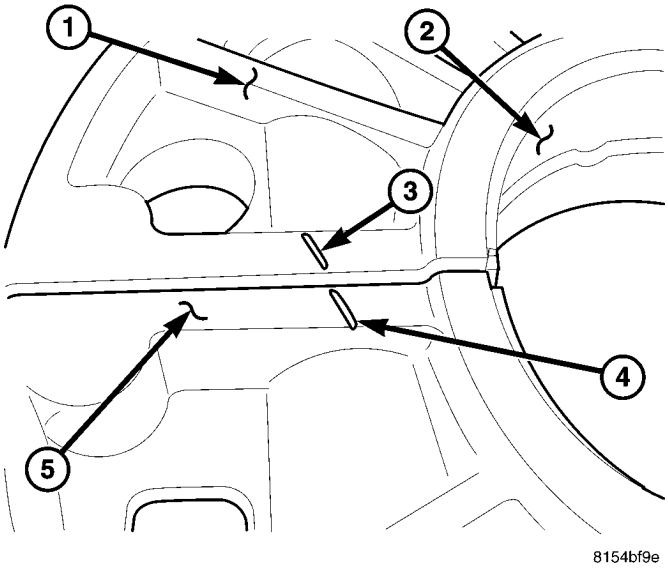

Fig. 78 CRANKSHAFT SUPPORT WITNESS MARKS

1 - UPPER CRANKSHAFT SUPPORT HALF
2 - CRANKSHAFT MAIN BEARING
3 - WITNESS MARK
4 - WITNESS MARK
5 - LOWER CRANKSHAFT SUPPORT HALF

CRANKSHAFT MAIN BEARINGS (Continued)

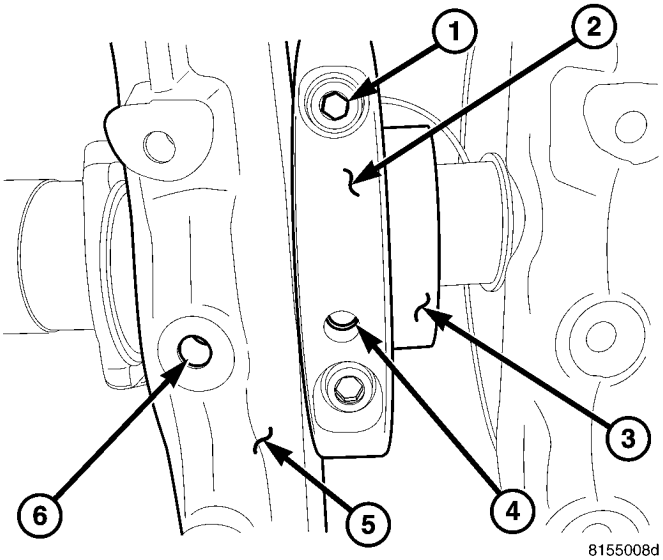

Fig. 79 CRANKSHAFT SUPPORT OIL PASSAGE ALIGNMENT

1 - CRANKSHAFT SUPPORT BOLT HEAD
2 - CRANKSHAFT SUPPORT
3 - CRANKSHAFT
4 - OIL PASSAGE SHOULDER INSIDE SUPPORT
5 - ENGINE BLOCK STRUCTURAL SUPPORT
6 - CRANKSHAFT SUPPORT ALIGNMENT ACCESS/BALANCE SHAFT OIL PASSAGE

NOTE: Crankshaft support witness marks must be facing toward the front of the engine before installing the crankshaft. The crankshaft supports have oil passages that must be aligned properly. The crankshaft support bolt heads should be facing the balance shaft (Fig. 79).

(3) Install crankshaft supports on crankshaft (Fig. 80). Torque bolts to 44.1N·m.

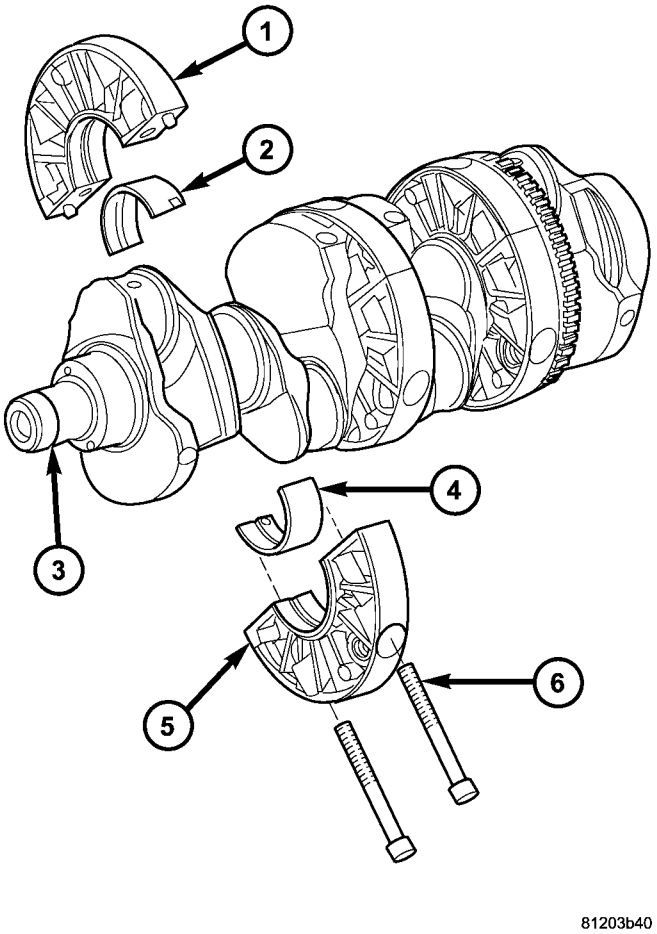

Fig. 80 2.8L CRANKSHAFT

1 - CRANKSHAFT SUPPORT HALVE
2 - MAIN BEARING HALVE
3 - GROOVE
4 - MAIN BEARING HALVE
5 - CRANKSHAFT SUPPORT HALVE
6 - MAIN BEARING SUPPORT BOLTS

CRANKSHAFT MAIN BEARINGS (Continued)

FRONT CRANKSHAFT MAIN BEARING

(1) Using special tool VM.1073, push front crankshaft main bearing in engine block (Fig. 81).

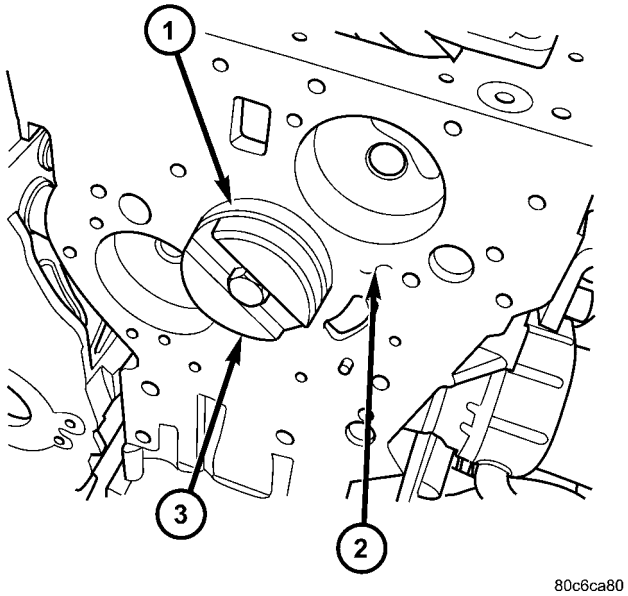

Fig. 81 FRONT MAIN BEARING INSTALLATION

1 - FRONT CRANKSHAFT MAIN BEARING
2 - ENGINE BLOCK
3 - SPECIAL TOOL VM.1073

(2) Be sure oil hole in bearing lines up with oil gally in engine block (Fig. 82).

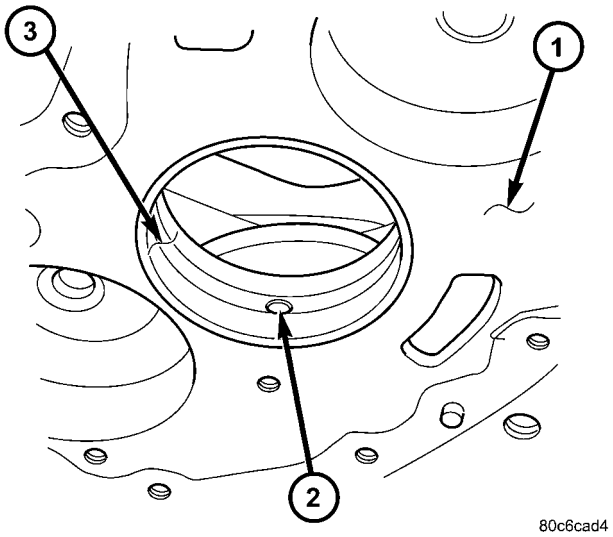

Fig. 82 FRONT MAIN BEARING ALIGNMENT

1 - ENGINE BLOCK
2 - OIL HOLE IN BEARING
3 - FRONT CRANKSHAFT MAIN BEARING

(3) Reassemble engine and install in vehicle.

CRANKSHAFT OIL SEAL - FRONT

REMOVAL

(1) Disconnect negative battery cable.

(2) Remove cooling fan and fan drive viscous clutch assembly (Refer to 7 - COOLING/ENGINE/FAN DRIVE VISCOUS CLUTCH - REMOVAL).

(3) Remove accessory drive belt (Refer to 7 - COOLING/ACCESSORY DRIVE/DRIVE BELTS - REMOVAL).

(4) Remove cooling fan support (Refer to 7 - COOLING/ENGINE/RADIATOR FAN - REMOVAL).

(5) Remove vibration damper/crankshaft pulley (Refer to 9 - ENGINE/ENGINE BLOCK/VIBRATION DAMPER - REMOVAL).

(6) Remove outer timing belt cover (Refer to 9 - ENGINE/VALVE TIMING/TIMING BELT / CHAIN COVER(S) - REMOVAL).

(7) Remove timing belt (Refer to 9 - ENGINE/VALVE TIMING/TIMING BELT/CHAIN AND SPROCKETS - REMOVAL).

(8) Remove timing belt inner cover (Refer to 9 - ENGINE/VALVE TIMING/TIMING BELT / CHAIN COVER(S) - REMOVAL).

NOTE: Crankshaft hub retaining bolt has left hand thread.

(9) Remove crankshaft hub.

(10) Remove front engine cover (Fig. 83) (Refer to 9 - ENGINE/ENGINE BLOCK/ENGINE COVER - REMOVAL).

(11) With cover on work bench, pry out old seal.

INSTALLATION

CAUTION: Do Not use a hammer to install the crankshaft oil seal.

NOTE: To prevent potential oil leaks, DO NOT touch the front crankshaft inner seal. Always handle the seal from the outer diameter.

(1) Clean engine block and front engine cover sealing surfaces.

(2) Install crankshaft oil seal on VM.1061 (Fig. 84).

(3) Place sleeve for VM.1061 on pressbench as shown (Fig. 84).

(4) Position VM.1061 and press in new seal into front engine cover (Fig. 84).

(5) Install front engine cover on engine using VM 101 as a guide, care must be take not to damage the seal (Fig. 85).

CRANKSHAFT OIL SEAL - FRONT (Continued)

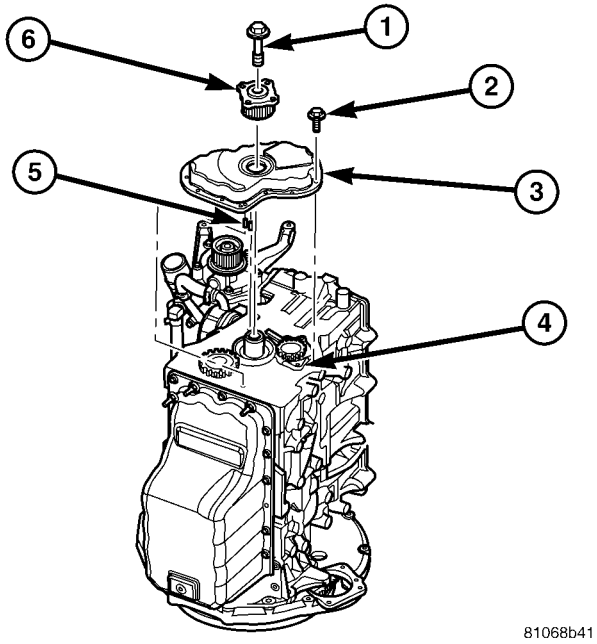

Fig. 83 FRONT ENGINE COVER

1 - CRANKSHAFT HUB RETAINING BOLT
2 - FRONT COVER RETAINING BOLTS
3 - FRONT COVER
4 - ENGINE BLOCK
5 - FRONT ENGINE COVER ALIGNMENT DOWEL
6 - CRANKSHAFT HUB

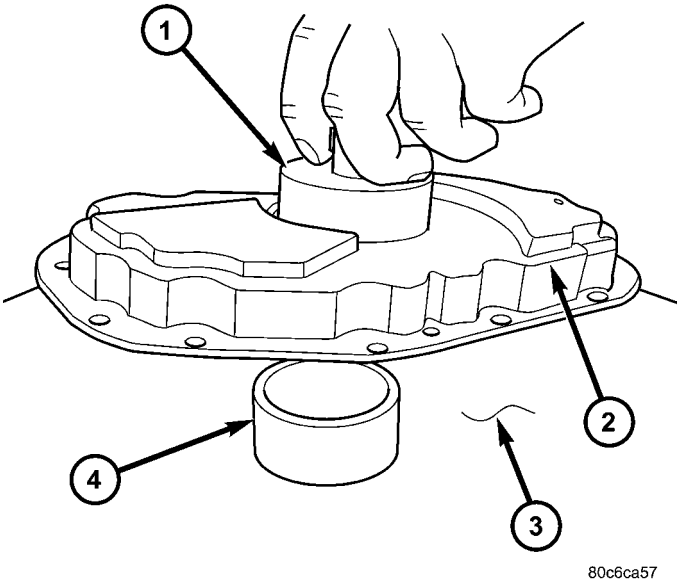

Fig. 84 VM.1061 PLACEMENT

1 - VM.1061
2 - FRONT ENGINE COVER
3 - PRESS BENCH
4 - SLEEVE FROM VM.1061

(6) Install crankshaft hub and retaining bolt. Torque bolt to 304N·m. (Fig. 86).

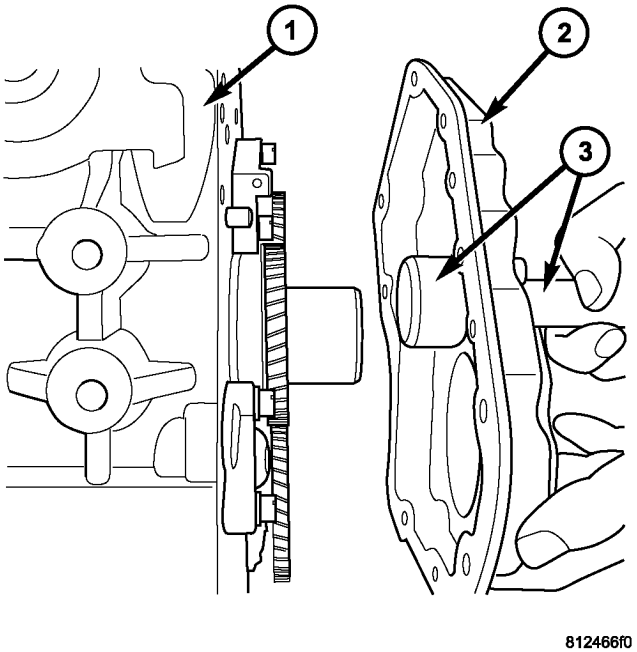

Fig. 85 ENGINE FRONT COVER

1 - ENGINE BLOCK
2 - FRONT ENGINE COVER
3 - VM.1061

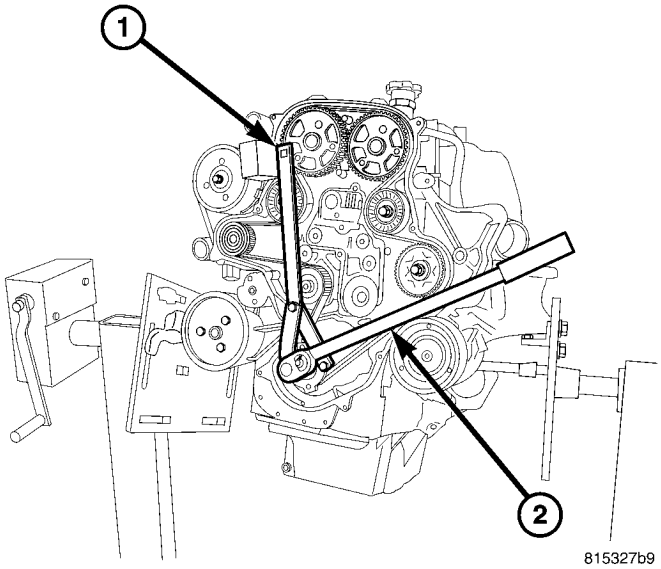

Fig. 86 SPECIAL TOOL #6958

1 - SPECIAL TOOL # 6958
2 - WRENCH

(7) Install timing belt inner cover (Refer to 9 - ENGINE/VALVE TIMING/TIMING BELT / CHAIN COVER(S) - INSTALLATION).

NOTE: Crankshaft must be rotated to 90 degrees ATDC (Refer to 9 - ENGINE/VALVE TIMING - STANDARD PROCEDURE).

CRANKSHAFT OIL SEAL - FRONT (Continued)

(8) Install timing belt (Refer to 9 - ENGINE/VALVE TIMING/TIMING BELT/CHAIN AND SPROCKETS - INSTALLATION) .

(9) Install timing belt outer cover (Refer to 9 - ENGINE/VALVE TIMING/TIMING BELT / CHAIN COVER(S) - INSTALLATION).

(10) Install vibration damper (Refer to 9 - ENGINE/ENGINE BLOCK/VIBRATION DAMPER - INSTALLATION).

(11) Install cooling fan support (Refer to 7 - COOLING/ENGINE/RADIATOR FAN - REMOVAL).

(12) Install accessory drive belt (Refer to 7 - COOLING/ACCESSORY DRIVE/DRIVE BELTS - INSTALLATION).

(13) Install cooling fan and fan drive viscous clutch assembly (Refer to 7 - COOLING/ENGINE/FAN DRIVE VISCOUS CLUTCH - INSTALLATION).

(14) Connect negative battery cable.

CRANKSHAFT OIL SEAL - REAR

DESCRIPTION

The rear crankshaft seal consists of two parts that reside in a third part, the rear support assembly. The rear seal is inserted into the rear cup (Fig. 87). These pieces should be assembled WITH OUT removing one from the other. The rear support assembly, once assembled, should not be separated as well, to reduced possibility of damage to the internal rear seal lip (Fig. 88).

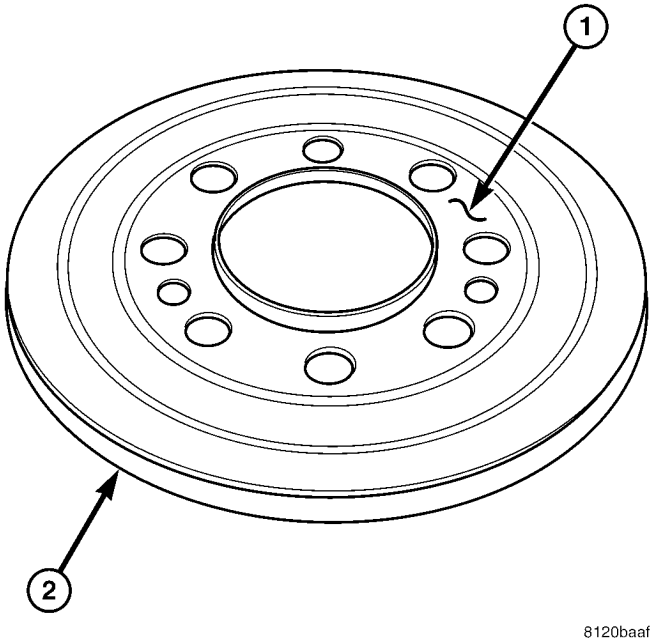

Fig. 87 REAR CRANKSHAFT SEAL ASSEMBLY

1 - REAR SEAL
2 - REAR CUP

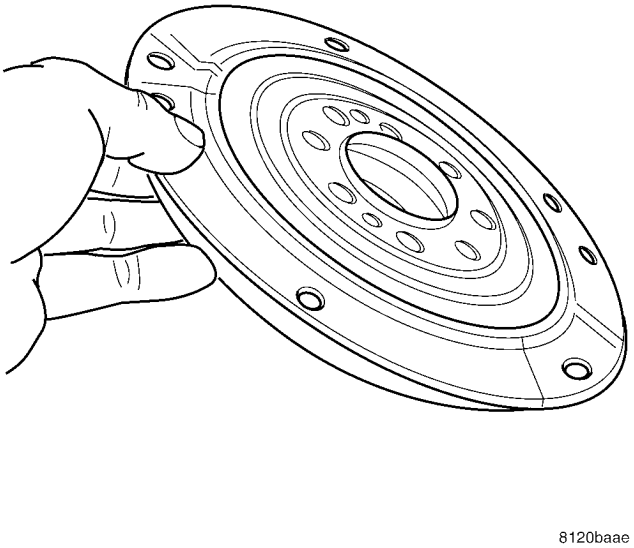

Fig. 88 REAR SUPPORT ASSEMBLY

REMOVAL

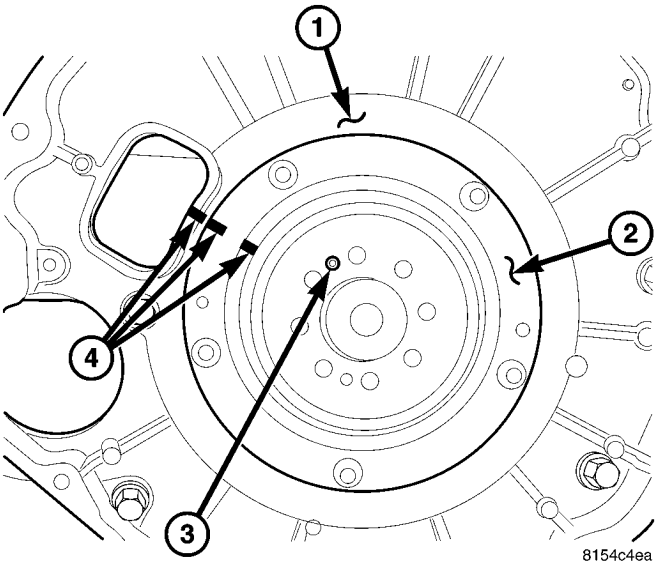

Fig. 89 ADAPTOR PLATE

1 - ADAPTOR PLATE
2 - REAR CRANKSHAFT SUPPORT
3 - DOWEL PIN
4 - PAINT OR SCRIBE MARK

This must be done with either the engine or transmission removed from vehicle.

(1) Remove flex plate/flywheel assembly (Refer to 9 - ENGINE/ENGINE BLOCK/FLEX PLATE - REMOVAL), (Refer to 9 - ENGINE/ENGINE BLOCK/FLEX PLATE - REMOVAL).

(2) Paint mark or scribe a witness mark on the engine block to be used for alignment purposes during assembly (Fig. 89).

(3) Pry out old crankshaft oil seal.

CRANKSHAFT OIL SEAL - REAR (Continued)

INSTALLATION

CAUTION: To prevent potential oil leaks, DO NOT touch or separate the rear crankshaft inner seal from the seal cup. When replacing the rear crankshaft carrier, DO NOT touch or separate the seal cup from the rear oil seal. Always handle the components as an assembly and from their outer diameter.

(1) Using special tool VM.1050, install rear crankshaft oil seal in rear main bearing support (Fig. 90).

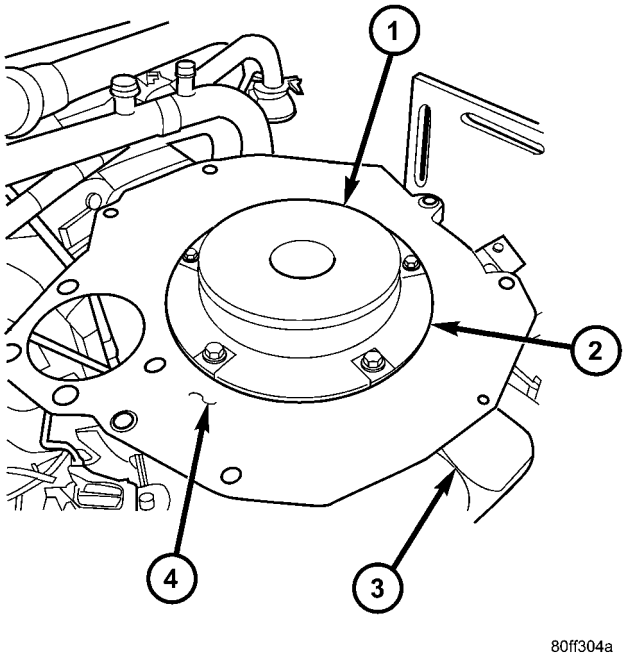

Fig. 90 2.8L REAR CRANKSHAFT OIL SEAL INSTALLATION USING VM.1050

1 - SPECIAL TOOL VM.1050
2 - REAR MAIN BEARING SUPPORT
3 - OIL PAN
4 - ENGINE TO TRANSMISSION ADAPTER PLATE

(2) Install engine or transmission in vehicle.

FLEX PLATE

REMOVAL

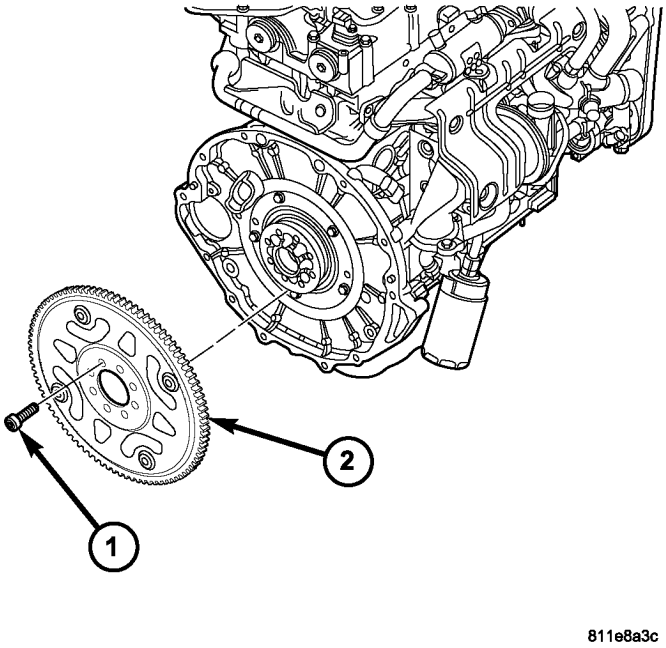

Fig. 91 FLEX PLATE

1 - FLEX PLATE BOLT
2 - FLEX PLATE

(1) Remove the transmission (Refer to 21 - TRANSMISSION/TRANSAXLE/AUTOMATIC - 42RLE - REMOVAL), (Refer to 21 - TRANSMISSION/TRANSAXLE/AUTOMATIC - 45RFE/545RFE - REMOVAL).

(2) Paint mark the flex plate hub to flex plate relation.

(3) Remove the 40 mm flex plate bolts and flex plate (Fig. 91).

(4) Inspect flex plate for damage.

INSTALLATION

NOTE: Do Not lubracate new bolts as they are already coated with an anti-scuff treatment.Align the flex plate to hub paint marks, where applicable.

(1) Install the flex plate hub and hand tighten the fasteners (Fig. 92).

(2) Tighten each flex plate hub fastener to 50 N·m (37 lbs. ft.) in a clockwise cross sequence.

(3) At this point, loosen one flex plate adaptor fastener, and with a torque wrench and angle gauge, tighten the fastener to 25 N·m (19 lbs. ft.), plus 60 degrees.

(4) Perform the above procedure for the remaining flex plate adaptor bolts in a clockwise cross sequence.

FLEX PLATE (Continued)

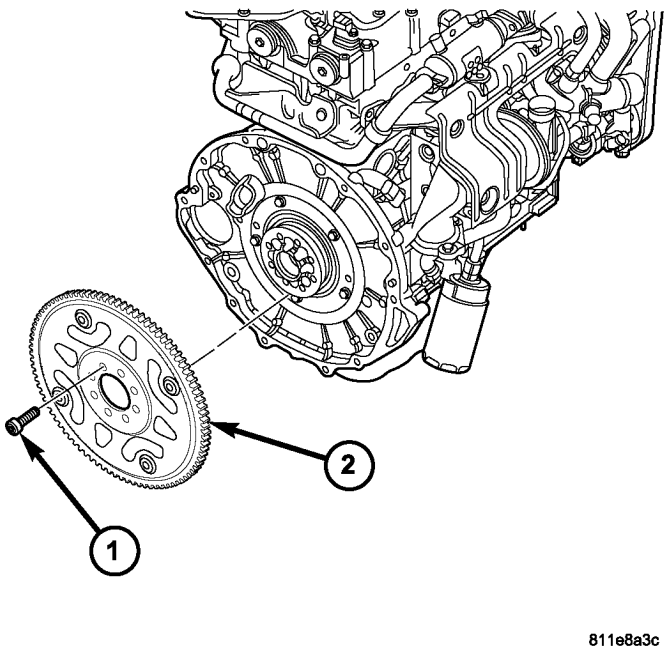

Fig. 92 FLEX PLATE

1 - FLEX PLATE BOLT
2 - FLEX PLATE

(5) Install the flex plate locating pin.

(6) Install the flex plate to the hub and install the fasteners. Tighten the flex plate fasteners in a cross sequence to 44 N·m (32.5 ft. lbs.) (Fig. 92).

(7) Install the transmission (Refer to 21 - TRANSMISSION/TRANSAXLE/AUTOMATIC - 42RLE - INSTALLATION), (Refer to 21 - TRANSMISSION/TRANSAXLE/AUTOMATIC - 45RFE/545RFE - INSTALLATION).

CYLINDER LINERS

DESCRIPTION

Each cylinder wall liner used on this engine is of the wet design. Coolant is in direct contact with the liner. Three O-rings are used to seal the liner to the engine block. The top O-rings (black) are water seals and the lower (brown) seal is an oil seal. The applicable metal shim is used for cylinder liner protrusion. If the liner is to be reused, match mark the liner and block. Anytime that the liners are removed, replace the O-rings and the shim. If one or more liners have been replaced the liner protrusion must be measured to determine the proper head gasket selection. If the liners are not removed, used the same thickness head gasket that was removed.

REMOVAL

CAUTION: To prevent damage to the oil jets, remove the oil jets before removing the pistons or liners.

(1) Remove engine from vehicle.

(2) With engine completely disassembled, use special tool VM.1001 to remove liner assembly (Fig. 93).

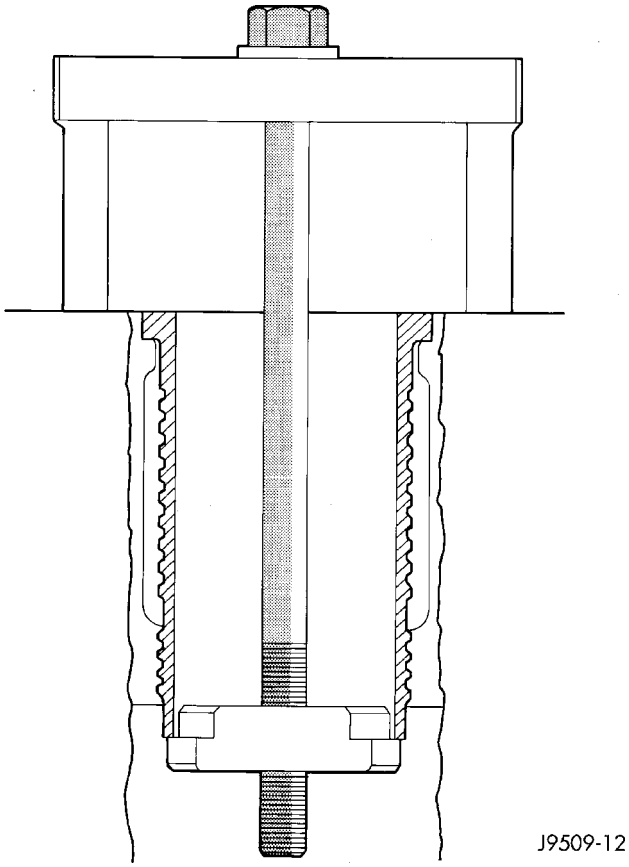

Fig. 93 CYLINDER LINER REMOVER

(3) Tighten bolt on VM.1001 to remove liner from block (Fig. 94).

(4) Remove shim(s) from cylinder liner or cylinder block recess. Keep shim(s) with each cylinder liner until cylinder liner protrusion measurement.

INSPECTION

The cylinder walls should be checked for out-of-round and taper with a dial bore gauge. The cylinder bore out-of-round is 0.100 mm (.0039 in.) maximum and cylinder bore taper is 0.100 mm (.0039 in.) maximum. If the cylinder walls are badly scuffed or scored, new liners should be installed and honed, and new pistons and rings fitted.

CYLINDER LINERS (Continued)

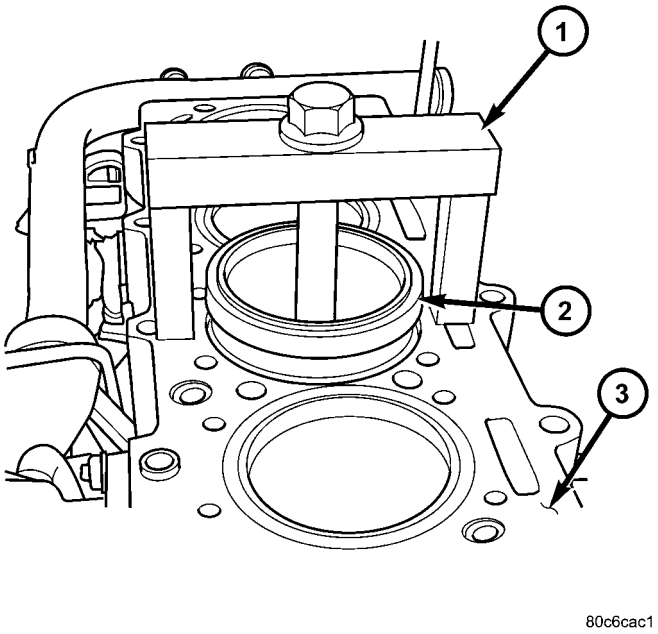

Fig. 94 CYLINDER LINER REMOVAL

1 - SPECIAL TOOL VM.1001
2 - CYLINDER LINER
3 - ENGINE BLOCK

Measure the cylinder bore at three levels in directions A and B (Fig. 95). Top measurement should be 10 mm (3/8 in.) down and bottom measurement should be 10 mm (3/8 in.) up from the bottom bore.

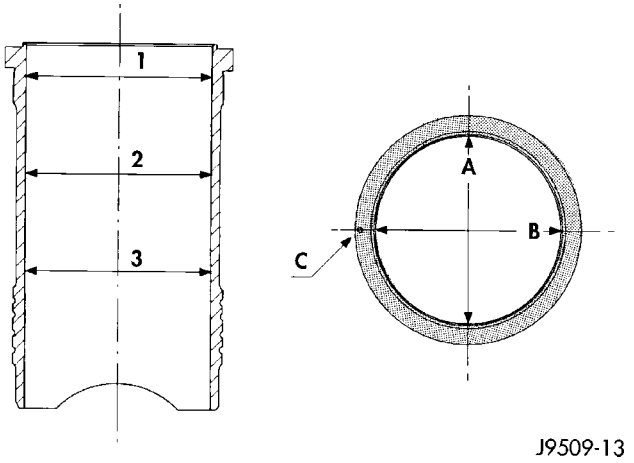

Fig. 95 LINER INSPECTION

INSTALLATION

CAUTION: Cleanliness can not be over emphasized enough when cleaning the cylinder liner to engine block mating surfaces. Failure to do so will result in the wrong protrusion reading. Only one shim per sleeve fitting. DO NOT stack or re-use shims.

NOTE: When installing liners for protrusion measurement, remove all O-rings and discard original shim.

(1) Carefully clean liner and engine block, and degrease the engine block deck where it comes into contact with the liners. Install the liners in the engine block as shown, rotating them back and forth by 45° in order to guarantee correct positioning (Fig. 96).

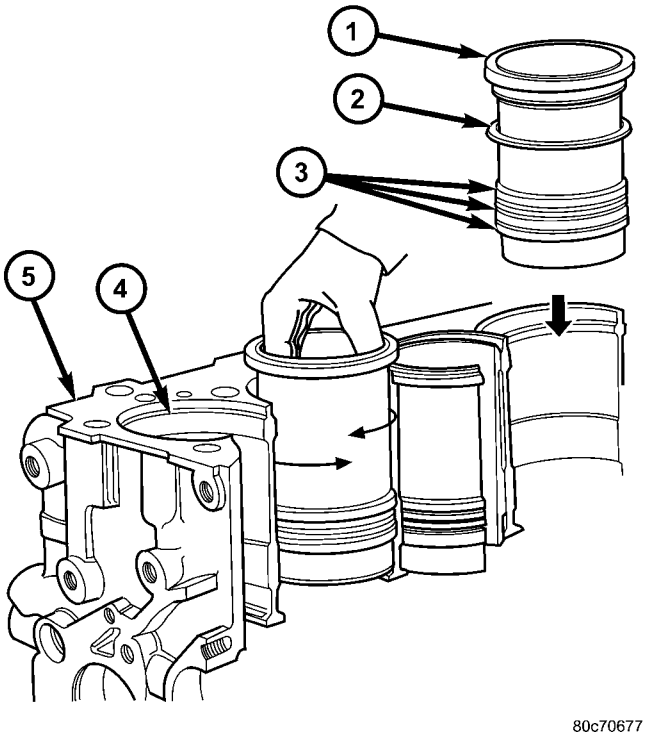

Fig. 96 LINER INSTALLATION

1 - CYLINDER LINER
2 - SHIMS
3 - O-RINGS
4 - BLOCK LEDGE
5 - ENGINE BLOCK

NOTE: All Measurements Must Be Taken On the High Pressure Pump Side.

(2) Measure the liner recess relative to block deck with dial indicator VM.1013 mounted on a special tool VM.1010 A.. Zero dial gauge on block deck.

NOTE: The cylinder liner reading will actually be a negative number.

(3) Move dial gauge to cylinder liner edge record reading on dial gauge. The reading should be negative.

(4) Remove liner and special tools.

(5) Then select the correct shim thickness to give proper protrusion (0.00 - 0.05 mm).

CYLINDER LINERS (Continued)

NOTE: The O-rings are used toward the bottom of the liner. Each liner has three O-rings that prevent coolant and engine oil from mixing. The brown (bottom) O-ring is an oil seal and the two black (top) O-rings are water seals.

(6) Fit the proper shim, and the O-rings, onto the liner.

(7) Lubricate the lower liner location in the block.

CAUTION: When installing special tool VM.1075, make sure the tool does not rotate when tightening and damage the cylinder liner. DO NOT rotate the engine with out special tool VM.1075 in position.

(8) Fit the liners in the crankcase making sure that the shim is positioned correctly in the seat. Lock the liners in position using special tool (VM.1076) and bolts tightened to 50 N·m (37 ft.lbs.) (Fig. 97).

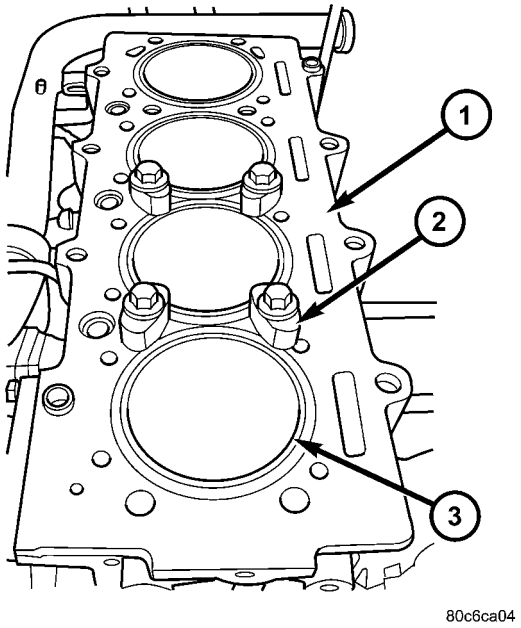

Fig. 97 LINER CLAMP LOCATION

1 - ENGINE BLOCK
2 - LINER RETAINER VM.1076
3 - CYLINDER LINER

(9) Recheck the liner protrusion. It should be 0.00 - 0.05 mm.

(10) Reassemble engine.

(11) Install engine in vehicle.

PISTON & CONNECTING ROD

DESCRIPTION

The pistons are of a free floating design. Oil jets in the engine block lubricate and cool the piston and pin assembly. The connecting rods have a pressed in place wrist pin bushing which is lubricated by the oil jets. Piston rod and bearing caps have cracked mating surfaces and are not interchangeable. (Fig. 98).

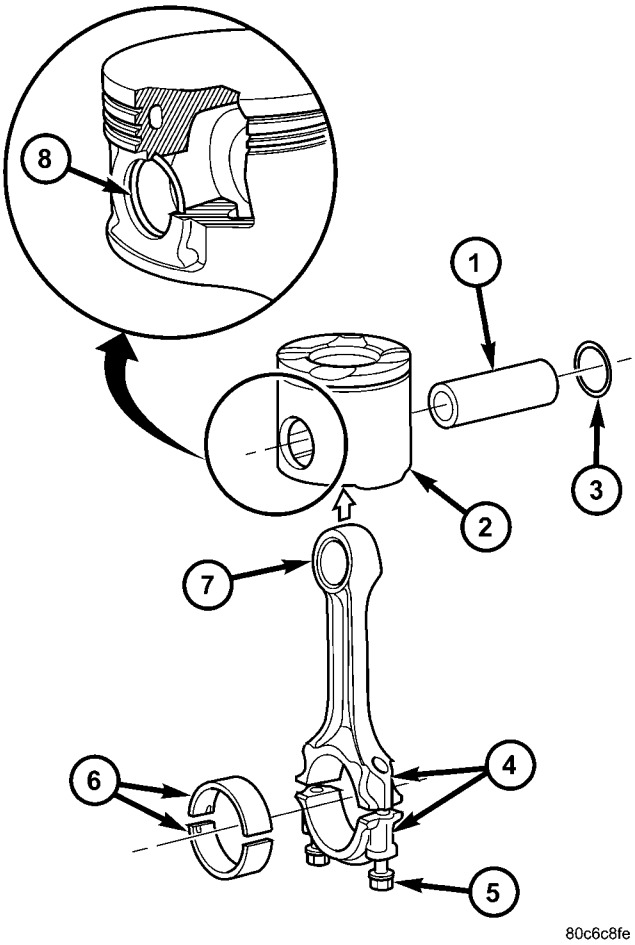

Fig. 98 PISTON AND CONNECTING ROD ASSEMBLY

1 - PISTON PIN
2 - PISTON
3 - SNAP RING
4 - PAINTED CONNECTING ROD ALIGNMENT NUMBERS
5 - CONNECTING ROD BOLT
6 - CONNECTING ROD BEARING
7 - CONNECTING ROD
8 - SNAP RING

PISTON & CONNECTING ROD (Continued)

STANDARD PROCEDURE - PISTON RING FITTING

(1) Wipe cylinder bore clean. Insert ring and push down with piston to ensure it is square in bore. The ring gap measurement must be made with the ring positioning at least 12 mm (0.50 in.) from bottom of cylinder bore (Fig. 99). Check gap with feeler gauge. Top compression ring gap .30 to .45mm (.0118 to .0177 in.). Second compression ring gap .30 to .45mm (.0118 to .0177 in.). Oil control ring gap .25 to .50mm (.0098 to .0196 in.).

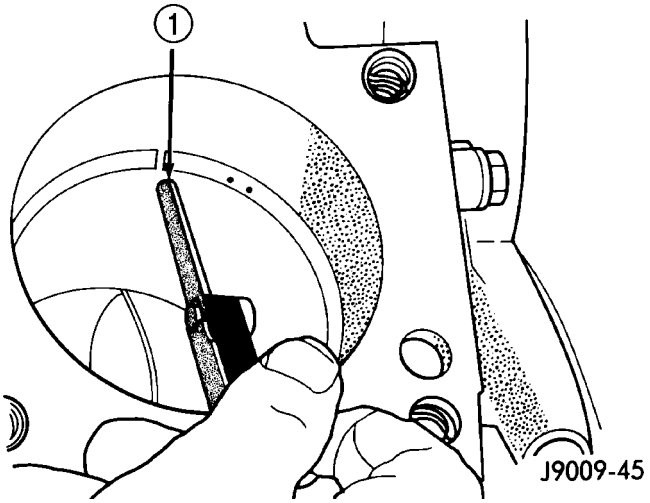

Fig. 99 RING END GAP MEASUREMENT

1 - FEELER GAUGE

(2) If ring gaps exceed dimension given, new rings or cylinder liners must be fitted. Keep piston rings in piston sets.

(3) Check piston ring to groove clearance (Fig. 100). Top compression ring gap .080 to .130mm (.0031 to .0051 in.). Second compression ring gap .070 to .110mm (.0027 to .0043 in.). Oil control ring gap .040 to .080mm (.0015 to .0031 in.).

REMOVAL

NOTE: Both the connecting rod and the connecting rod cap are paint marked to aid during assembly. Paint marks disappear after time. If the rod and the cap are not marked with paint, paint mark or scribe them before disassembly.

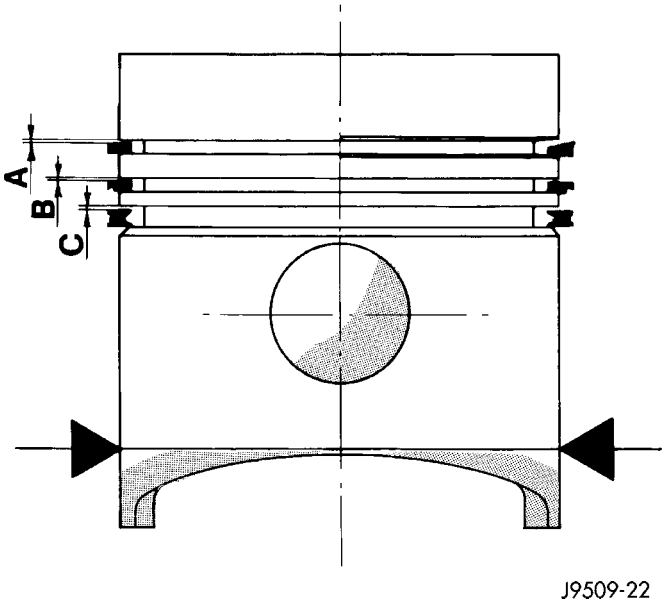

Fig. 100 PISTON RING TO GROOVE CLEARANCE

(1) Disconnect negative battery cable.

(2) Remove cylinder head (Refer to 9 - ENGINE/CYLINDER HEAD - REMOVAL).

(3) Raise vehicle on hoist.

(4) Remove oil pan (Refer to 9 - ENGINE/LUBRICATION/OIL PAN - REMOVAL).

(5) Remove oil pump pickup tube. (Refer to 9 - ENGINE/LUBRICATION/OIL PUMP - REMOVAL)

(6) Remove balance shaft assembly (Refer to 9 - ENGINE/VALVE TIMING/BALANCE SHAFT - REMOVAL).

(7) Remove top ridge of cylinder bores with a ridge reamer before removing pistons from cylinder block. **Be sure to keep top of pistons covered during this operation.**

(8) Piston and connecting rods must be removed from top of cylinder block. Rotate crankshaft so that each connecting rod is centered in cylinder bore.

NOTE: Be careful not to nick or scratch crankshaft journals

(9) After removal, install bearing cap on the mating rod and mark pistons with matching cylinder number when removed from engine block.

PISTON & CONNECTING ROD (Continued)

PISTON PIN - REMOVAL

(1) Secure connecting rods in a soft jawed vice.

(2) Remove 2 snap rings securing piston pin (Fig. 101).

(3) Push piston pin out of piston and connecting rod (Fig. 101).

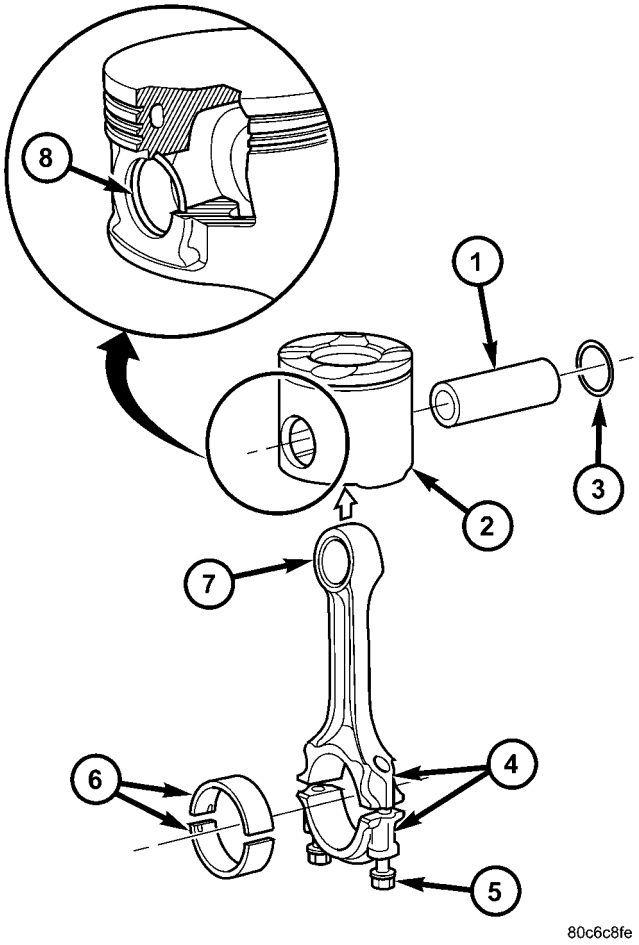

Fig. 101 PISTON AND CONNECTING ROD ASSEMBLY

1 - PISTON PIN
2 - PISTON
3 - SNAP RING
4 - CONNECTING ROD ALIGNMENT NUMBERS
5 - CONNECTING ROD BOLT
6 - CONNECTING ROD BEARING
7 - CONNECTING ROD
8 - SNAP RING

PISTON RING - REMOVAL

(1) ID mark on face of top and second piston rings must point toward piston crown.

(2) Using a suitable ring expander, remove top and second piston rings (Fig. 102).

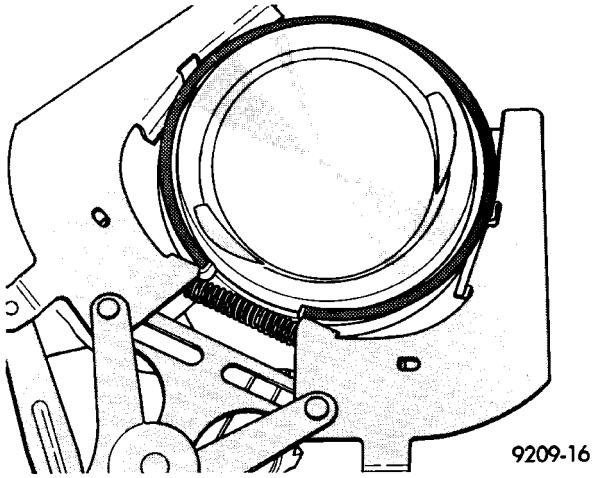

Fig. 102 PISTON RINGS - REMOVAL/INSTALLATION

(3) Remove upper oil ring side rail, lower oil ring side rail and then the oil expander from piston.

(4) Carefully clean carbon from piston crowns, skirts and ring grooves ensuring the 4 oil holes in the oil control ring groove are clear.

INSPECTION

PISTONS

(1) Piston Diameter: Size: 91.912-91.928mm (3.6185-3.6192 in.) Maximum wear limit .05mm (.0019 in.).

(2) Check piston pin bores in piston for roundness. Make 3 checks at 120° intervals. Maximum out of roundness .05mm (.0019in.).

(3) The piston diameter should be measured approximately 15 mm (.590 in.) up from the base.

(4) Skirt wear should not exceed 0.1 mm (.00039 in.).

(5) The clearance between the cylinder liner and piston should not exceed 0.065-0.083 mm (.0025-.0032 in.).

PISTON & CONNECTING ROD (Continued)

CONNECTING RODS

CAUTION: Connecting rod bolts must be replaced when disassembled. When assembling the connecting rod, be sure that the pawl on each of the connecting rod caps is facing the rear (fly wheel) side of the engine (Fig. 103).

NOTE: Do Not lubricate the new connecting rod bolts. They are already coated with a anti scuff treatment.

(1) Assemble bearing shells and bearing caps to their respective connecting rods ensuring that the serrations on the cap and reference marks are aligned (Fig. 103).
(2) Tighten connecting cap bolts to 10 N·m (88 in. lbs.).
(3) Without loosening connecting rod bolts, tighten all bolts to 30N·m (22 ft.lbs.).
(4) Using a torque angle gauge, tighten each bolt an additional 40°.
(5) Recheck all bolt tightening with a torque wrench set to 88N·m (65 ft.lbs.).
(6) Check and record internal diameter of crank end of connecting rod.

CAUTION: When changing connecting rods, DO NOT use a stamp to mark the cylinder location. Identify the connecting rods and caps location using a paint marker. All four must have the same weight and the same number. Replacement connecting rods will only be supplied in sets of four (Fig. 103).

Connecting rods are supplied in sets of four since they all must be of the same weight category. Max allowable weight difference is 5 gr.

PISTON PINS

(1) Measure the diameter of piston pin in the center and both ends.For specification, (Refer to 9 - ENGINE - SPECIFICATIONS), (Refer to 9 - ENGINE - SPECIFICATIONS)

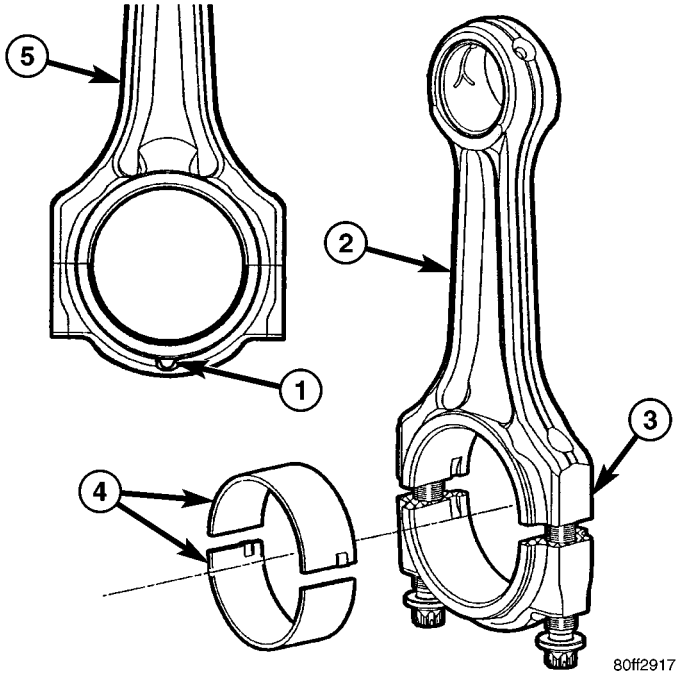

Fig. 103 CONNECTING ROD IDENTIFICATION

1 - CONNECTING ROD PAWL
2 - CONNECTING ROD
3 - PAINTED CYLINDER IDENTIFIER
4 - CONNECTING ROD BEARINGS
5 - CONNECTING ROD

INSTALLATION

PISTON PIN INSTALLATION

(1) Secure connecting rod in soft jawed vice.
(2) Lubricate piston pin and piston with clean engine oil.
(3) Position piston on connecting rod (Fig. 104).

CAUTION: Ensure arrow on piston crown and the bearing cap numbers on the connecting rod are on the opposite side.

(4) Install piston pin (Fig. 104).
(5) Install clips in piston to retain piston pin (Fig. 104).
(6) Remove connecting rod from vice.

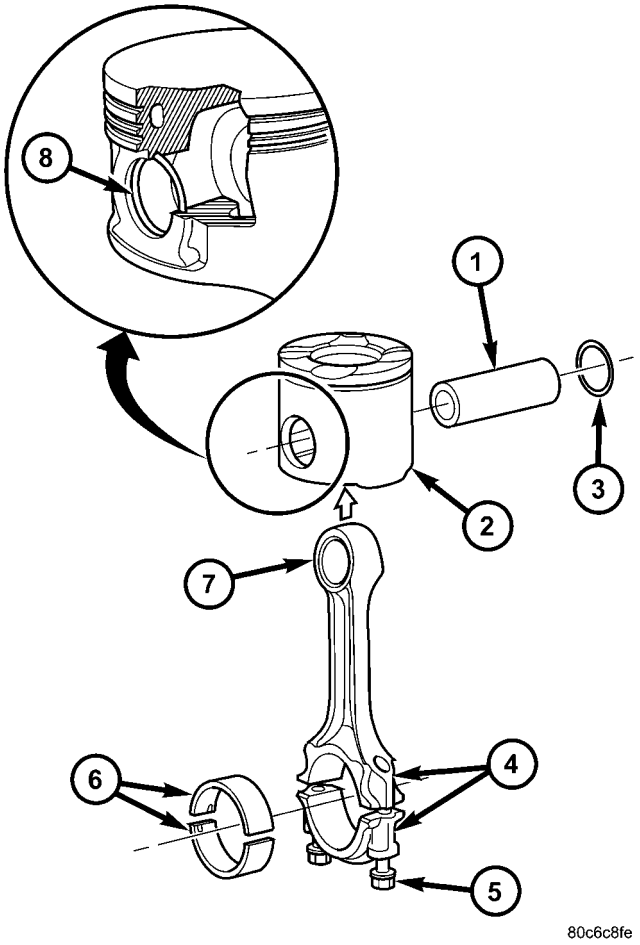

Fig. 104 PISTON AND CONNECTING ROD ASSEMBLY

1 - PISTON PIN
2 - PISTON
3 - SNAP RING
4 - CONNECTING ROD ALIGNMENT NUMBERS
5 - CONNECTING ROD BOLT
6 - CONNECTING ROD BEARING
7 - CONNECTING ROD
8 - SNAP RING

PISTON RINGS - INSTALLATION

(1) Install rings on the pistons using a suitable ring expander (Fig. 105).

(2) Top compression ring is tapered and chromium plated. The second ring is of the scraper type and must be installed with scraping edge facing bottom of the piston. The third is an oil control ring. Ring gaps must be positioned, before inserting piston into the liners, as follows.

(3) Top ring gap must be positioned at the #3 position (looking at the piston crown from above) (Fig. 106).

(4) Second piston ring gap should be positioned at the #1 position (Fig. 106).

(5) Oil control ring gap should be positioned at the #2 position (Fig. 106).

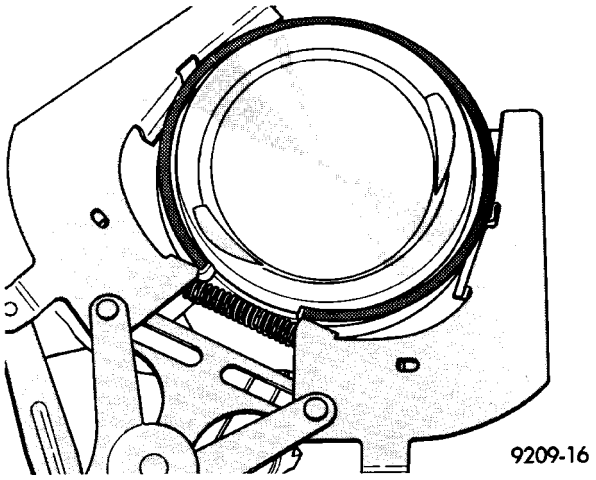

Fig. 105 PISTON RINGS-INSTALLATION

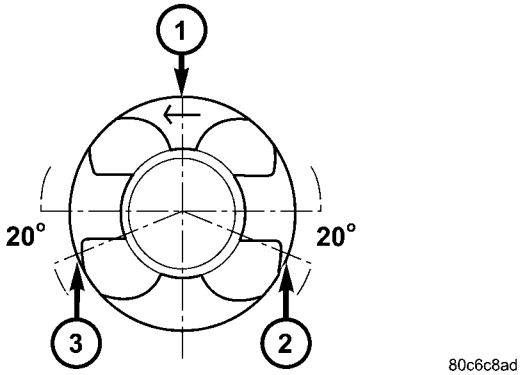

Fig. 106 PISTON RING GAP LOCATION

1 - SECOND COMPRESSION RING GAP POSITION
2 - OIL CONTROL RING GAP POSITION
3 - TOP COMPRESSION RING GAP POSITION

(6) When assembling pistons check that components are installed in the same position as before disassembly, determined by the numbers stamped on the crown of individual pistons. Engine cylinders are numbered starting from gear train end of the engine. **Face arrow on top of piston toward front of engine**. Therefore, the numbers stamped on connecting rod big end should face toward the injection pump side of engine. To insert piston into cylinder use a ring compressor as shown in (Fig. 107).

INSTALLATION

(1) Before installing pistons, and connecting rod assemblies into the bore, be sure that compression ring gaps are staggered so that neither is in line with oil ring rail gap (Fig. 106).

PISTON & CONNECTING ROD (Continued)

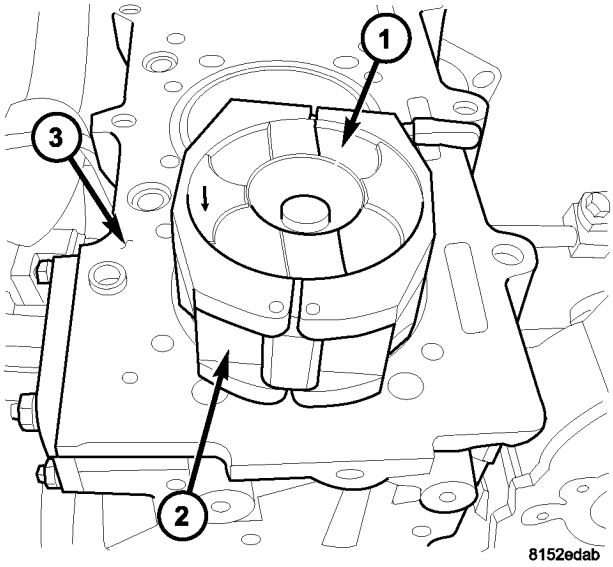

Fig. 107 PISTON INSTALLATION

1 - PISTON
2 - PISTON RING COMPRESSOR
3 - ENGINE BLOCK

(2) Before installing the ring compressor, make sure the oil ring expander ends are butted together (Fig. 107).

(3) Immerse the piston head and rings in clean engine oil, slide the piston ring compressor, over the piston and tighten (Fig. 107). **Ensure position of rings does not change during this operation**.

(4) Face arrow on piston towards front of engine.

CAUTION: Care must be taken not to nick crankshaft journal when installing pistons.

(5) Rotate crankshaft so that the connecting rod journal is on the center of the cylinder bore. Insert rod and piston into cylinder bore and guide rod over the crankshaft journal (Fig. 107).

(6) Guide the piston down in cylinder bore, using a hammer handle. At the same time, guide connecting rod into position on connecting rod journal.

(7) Install connecting rod caps (Fig. 108). Install rod bolts and torque to 10N·m (88 lbs. in.). Torque bolts the next stage to 30N·m (22 ft.lb.) plus 60°. Then with a torque wrench set at torque to 88N·m (65 ft.lb), make a tightening check.

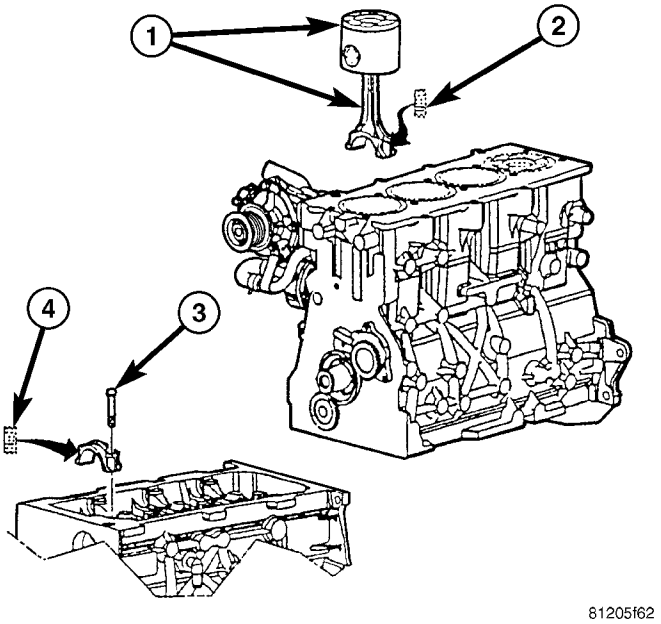

Fig. 108 PISTON AND CONNECTING ROD INSTALLATION

1 - PISTON AND CONNECTING ROD ASSEMBLY
2 - FOUR DIGIT NUMBER
3 - CONNECTING ROD BOLT
4 - FOUR DIGIT NUMBER

(8) Install cylinder head (Refer to 9 - ENGINE/CYLINDER HEAD - INSTALLATION).

(9) Install balance shaft assembly (Refer to 9 - ENGINE/VALVE TIMING/BALANCE SHAFT - INSTALLATION).

(10) Install oil pump pickup tube (Refer to 9 - ENGINE/LUBRICATION/OIL PUMP - INSTALLATION).

(11) Install oil pan (Refer to 9 - ENGINE/LUBRICATION/OIL PAN - INSTALLATION).

(12) Connect negative battery cable.

VIBRATION DAMPER

REMOVAL

(1) Disconnect negative battery cable.

(2) Remove viscous cooling fan and shrowd (Refer to 7 - COOLING/ENGINE/FAN DRIVE VISCOUS CLUTCH - REMOVAL).

(3) Remove accessory drive belt (Refer to 7 - COOLING/ACCESSORY DRIVE/DRIVE BELTS - REMOVAL).

(4) Remove vibration damper retaining bolts and damper (Fig. 109).

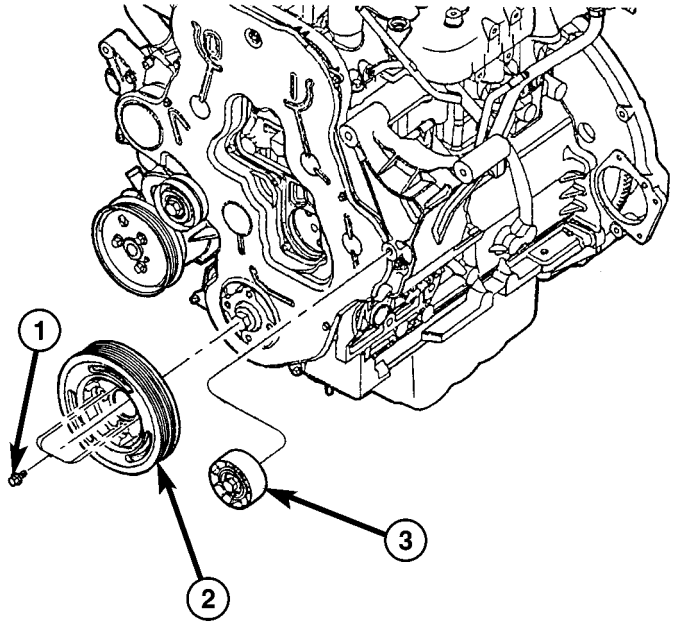

Fig. 109 VIBRATION DAMPER

1 - VIBRATION DAMPER/CRANKSHAFT PULLEY RETAINING BOLTS
2 - VIBRATION DAMPER/CRANKSHAFT PULLEY
3 - IDLER PULLEY

INSTALLATION

(1) Install vibration damper and retaining bolts. Torque bolts to 32.4N·m. (24 ft.lbs.).

(2) Install accessory drive belt (Refer to 7 - COOLING/ACCESSORY DRIVE/DRIVE BELTS - INSTALLATION).

(3) Install viscous fan and fan shrowd (Refer to 7 - COOLING/ENGINE/FAN DRIVE VISCOUS CLUTCH - INSTALLATION).

(4) Connect negative battery cable.

INTERNAL VACUUM PUMP

DESCRIPTION

The diesel engine uses a internal vacuum pump. This vacuum pump is mounted in the front of the engine block under the engine front cover (Fig. 110). The vacuum pump is driven by a sprocket on the crankshaft.

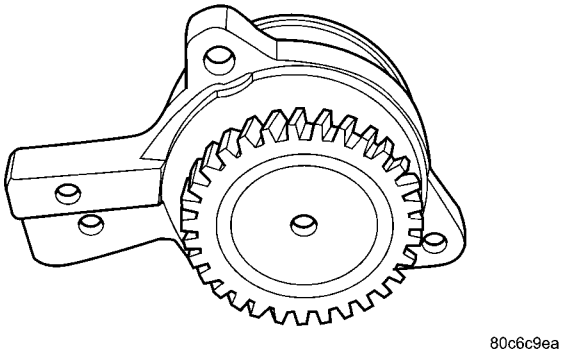

Fig. 110 VACUUM PUMP

REMOVAL

(1) Disconnect negative battery cable.

(2) Remove cooling fan and fan drive viscous clutch assembly (Refer to 7 - COOLING/ENGINE/FAN DRIVE VISCOUS CLUTCH - REMOVAL).

(3) Remove accessory drive belt (Refer to 7 - COOLING/ACCESSORY DRIVE/DRIVE BELTS - REMOVAL).

(4) Remove cooling fan support (Refer to 7 - COOLING/ENGINE/RADIATOR FAN - REMOVAL).

(5) Remove vibration damper/crankshaft pulley (Refer to 9 - ENGINE/ENGINE BLOCK/VIBRATION DAMPER - REMOVAL).

(6) Rotate the engine to 90 degrees ATDC (Refer to 9 - ENGINE/VALVE TIMING - STANDARD PROCEDURE).

(7) Remove outer timing belt cover (Refer to 9 - ENGINE/VALVE TIMING/TIMING BELT / CHAIN COVER(S) - REMOVAL).

CAUTION: Before removing the cylinder head cover/ intake manifold or timing belt the engine must rotated to the 90° ATDC. Failure to do so could result in valve and/or piston damage during reassembly. (Refer to 9 - ENGINE/VALVE TIMING - STANDARD PROCEDURE)

(8) Remove timing belt (Refer to 9 - ENGINE/VALVE TIMING/TIMING BELT/CHAIN AND SPROCKETS - REMOVAL).

(9) Remove timing belt inner cover (Refer to 9 - ENGINE/VALVE TIMING/TIMING BELT / CHAIN COVER(S) - REMOVAL).

INTERNAL VACUUM PUMP (Continued)

NOTE: Crankshaft hub has LHD thread.

(10) Remove crankshaft hub.
(11) Remove front engine cover (Refer to 9 - ENGINE/ENGINE BLOCK/ENGINE COVER - REMOVAL).
(12) Remove crankshaft sprocket (Fig. 111).
(13) Remove vacuum pump (Fig. 111).

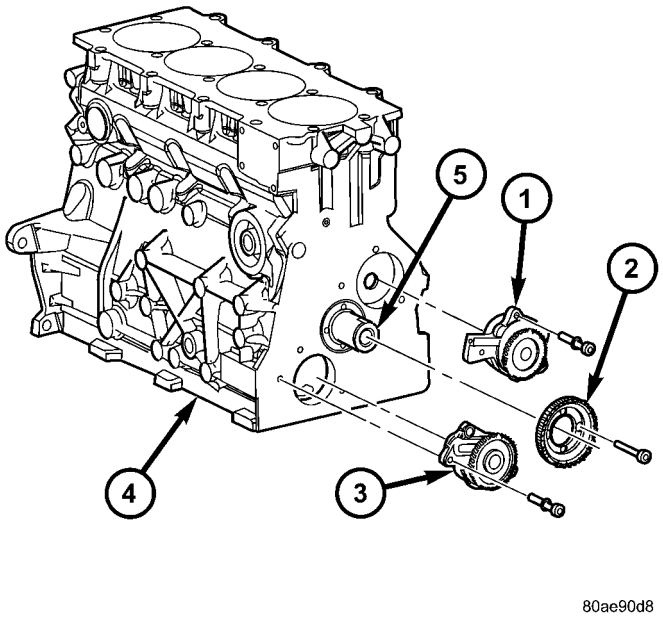

Fig. 111 OIL PUMP AND VACUUM PUMP

1 - VACUUM PUMP
2 - CRANKSHAFT SPROCKET
3 - OIL PUMP
4 - ENGINE BLOCK
5 - CRANKSHAFT

INSTALLATION

NOTE: Verify the 3 blades on the vacuum pump are in place and correctly assembled. The tapered edge should be on the outer side. Make sure the pump rotates before installation.

(1) Lubricate vacuum pump components and install in engine block (Fig. 112). Torque bolts to 10.8N·m.(96 in. lbs.).
(2) Install crankshaft sprocket. Torque bolts to 10.8N·m.(96 in. lbs.).
(3) Install front engine cover (Refer to 9 - ENGINE/ENGINE BLOCK/ENGINE COVER - INSTALLATION).
(4) Install front crankshaft hub. Torque bolt to 304N·m. (203 ft. lbs.) (Fig. 113).
(5) Install timing belt inner cover (Refer to 9 - ENGINE/VALVE TIMING/TIMING BELT / CHAIN COVER(S) - INSTALLATION).

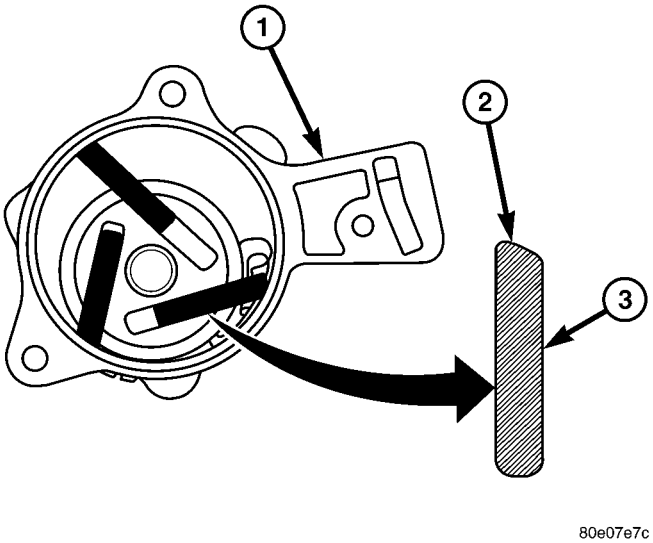

Fig. 112 VACUUM PUMP COMPONENTS

1 - VACUUM PUMP BODY
2 - VACUUM PUMP BLADE TAPERED EDGE
3 - VACUUM PUMP BLADE

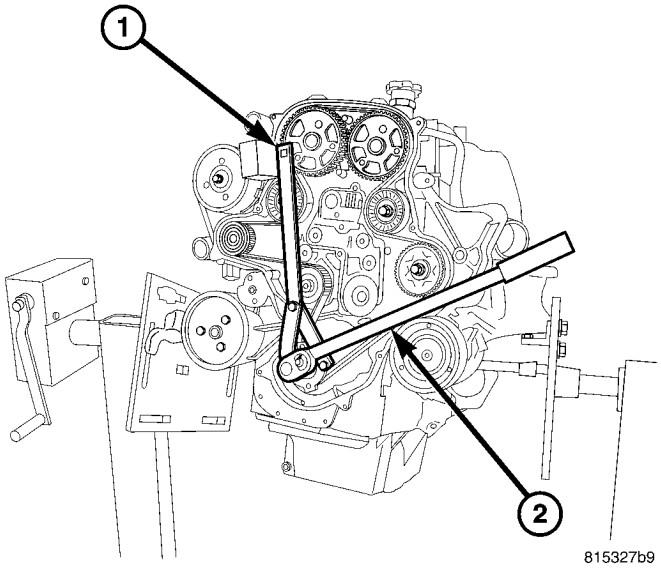

Fig. 113 SPECIAL TOOL #6958

1 - SPECIAL TOOL # 6958
2 - WRENCH

(6) Install timing belt (Refer to 9 - ENGINE/VALVE TIMING/TIMING BELT/CHAIN AND SPROCKETS - INSTALLATION) .
(7) Install timing belt outer cover (Refer to 9 - ENGINE/VALVE TIMING/TIMING BELT / CHAIN COVER(S) - INSTALLATION).
(8) Install vibration damper (Refer to 9 - ENGINE/ENGINE BLOCK/VIBRATION DAMPER - INSTALLATION).
(9) Install cooling fan support (Refer to 7 - COOLING/ENGINE/RADIATOR FAN - INSTALLATION).

INTERNAL VACUUM PUMP (Continued)

(10) Install accessory drive belt (Refer to 7 - COOLING/ACCESSORY DRIVE/DRIVE BELTS - INSTALLATION).

(11) Install cooling fan and fan drive viscous clutch assembly (Refer to 7 - COOLING/ENGINE/FAN DRIVE VISCOUS CLUTCH - INSTALLATION).

(12) Connect negative battery cable.

ENGINE COVER - FRONT

DESCRIPTION

The front engine cover on this engine is a stamped steel cover which covers the oil pump and vacuum pump.

REMOVAL

(1) Disconnect negative battery cable.

(2) Remove cooling fan and fan drive viscous clutch assembly (Refer to 7 - COOLING/ENGINE/FAN DRIVE VISCOUS CLUTCH - REMOVAL).

(3) Remove accessory drive belt (Refer to 7 - COOLING/ACCESSORY DRIVE/DRIVE BELTS - REMOVAL).

(4) Remove cooling fan support (Refer to 7 - COOLING/ENGINE/RADIATOR FAN - REMOVAL).

(5) Remove vibration damper (Refer to 9 - ENGINE/ENGINE BLOCK/VIBRATION DAMPER - REMOVAL).

(6) Remove timing belt outer cover (Refer to 9 - ENGINE/VALVE TIMING/TIMING BELT / CHAIN COVER(S) - REMOVAL).

CAUTION: Before removing the cylinder head cover/ intake manifold or timing belt the engine must aligned at 90° ATDC. Failure to do so could result in valve and/or piston damage during reassembly. (Refer to 9 - ENGINE/VALVE TIMING - STANDARD PROCEDURE)

(7) Remove timing belt (Refer to 9 - ENGINE/VALVE TIMING/TIMING BELT/CHAIN AND SPROCKETS - REMOVAL).

(8) Remove timing belt inner cover (Refer to 9 - ENGINE/VALVE TIMING/TIMING BELT / CHAIN COVER(S) - REMOVAL).

NOTE: Crankshaft hub has left hand thread.

(9) Remove crankshaft hub.

(10) Remove front engine cover (Fig. 114).

INSTALLATION

(1) Clean engine block and front engine cover sealing surfaces.

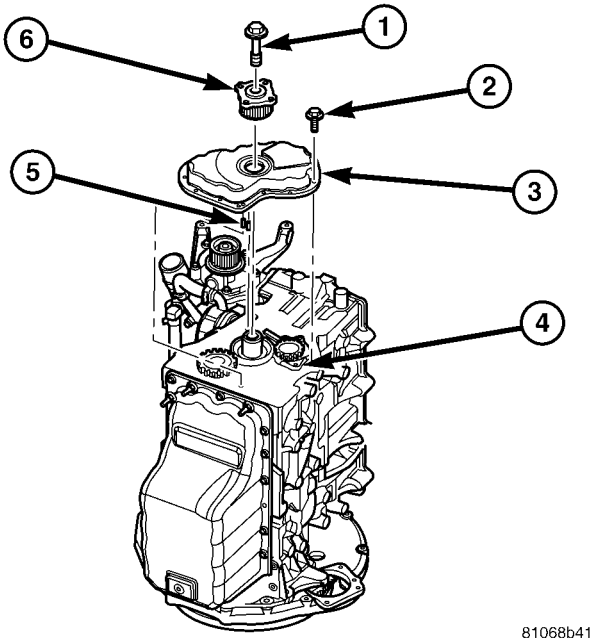

Fig. 114 FRONT ENGINE COVER

1 - CRANKSHAFT HUB RETAINING BOLT
2 - FRONT COVER RETAINING BOLTS
3 - FRONT COVER
4 - ENGINE BLOCK
5 - FRONT ENGINE COVER ALIGNMENT DOWEL
6 - CRANKSHAFT HUB

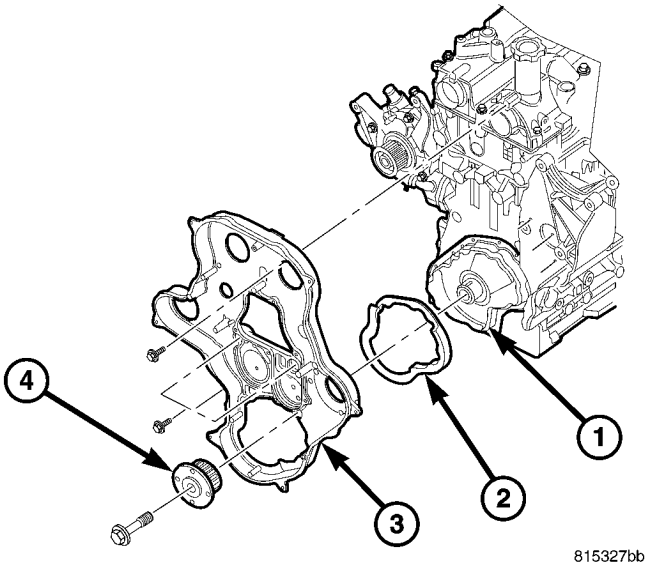

Fig. 115 FRONT ENGINE COVER

1 - FRONT ENGINE COVER
2 - SEAL
3 - TIMING BELT INNER COVER
4 - LOWER TIMING BELT GEAR

(2) Apply a continous 3mm bead of Silicone Sealer to cover, install within 10 minutes. Torque bolts to 11.8N·m.(104 in.lbs.). (Fig. 115).

ENGINE COVER - FRONT (Continued)

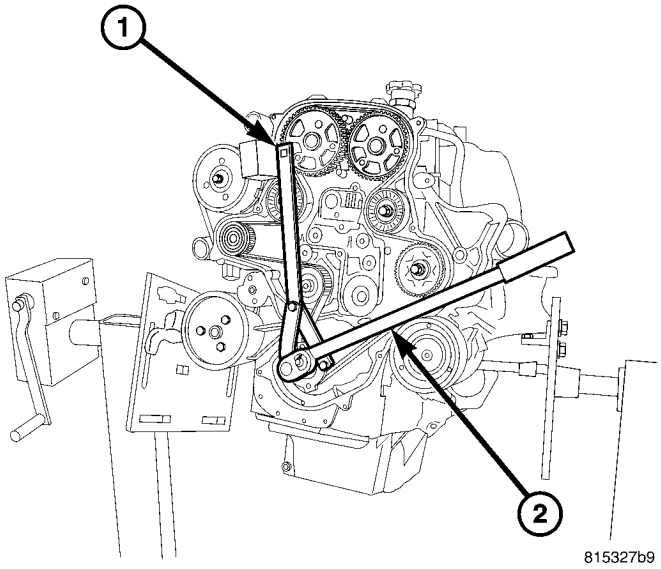

Fig. 116 SPECIAL TOOL #6958

1 - SPECIAL TOOL # 6958
2 - WRENCH

(3) Install crankshaft hub. Using special tool # 6958, torque bolt to 304N·m. (203 ft. lbs.) (Fig. 116).

(4) Install timing belt inner cover (Refer to 9 - ENGINE/VALVE TIMING/TIMING BELT / CHAIN COVER(S) - INSTALLATION).

(5) Install timing belt (Refer to 9 - ENGINE/ VALVE TIMING/TIMING BELT/CHAIN AND SPROCKETS - INSTALLATION) .

(6) Install timing belt outer cover (Refer to 9 - ENGINE/VALVE TIMING/TIMING BELT / CHAIN COVER(S) - INSTALLATION)

(7) Install vibration damper (Refer to 9 - ENGINE/ ENGINE BLOCK/VIBRATION DAMPER - INSTALLATION).

(8) Install cooling fan support (Refer to 7 - COOLING/ENGINE/RADIATOR FAN - INSTALLATION).

(9) Install accessory drive belt (Refer to 7 - COOLING/ACCESSORY DRIVE/DRIVE BELTS - INSTALLATION).

(10) Install cooling fan and fan drive viscous clutch assembly (Refer to 7 - COOLING/ENGINE/FAN DRIVE VISCOUS CLUTCH - INSTALLATION).

(11) Connect negative battery cable.

LEFT MOUNT

REMOVAL

(1) Disconnect the negative battery cable.

(2) Remove the cooling fan and fan shroud (Refer to 7 - COOLING/ENGINE/RADIATOR FAN - REMOVAL).

(3) Raise and support the vehicle.

(4) Loosen both engine mount through bolts.

NOTE: Care must be taken not to damage any wiring above the transmission when raising the engine.

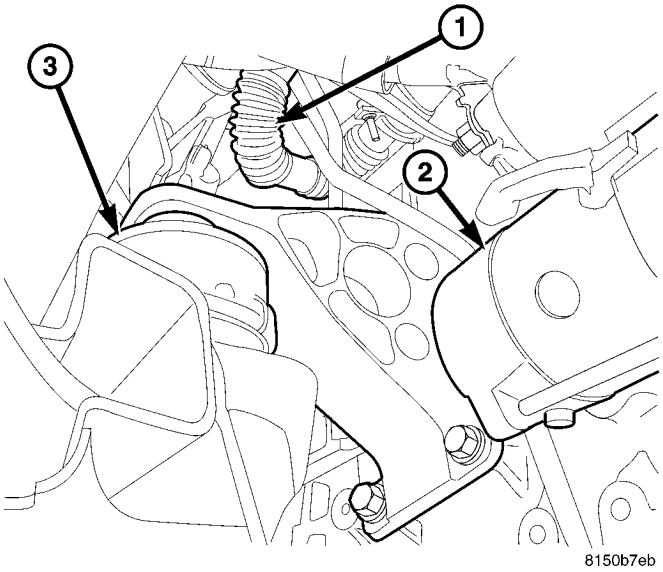

Fig. 117 LEFT ENGINE MOUNT

1 - EGR TUBE
2 - STARTER
3 - LEFT ENGINE MOUNT

(5) Using a suitable jack, raise and support the engine.

(6) Remove the engine mount retaining bolts and remove the mount (Fig. 117).

INSTALLATION

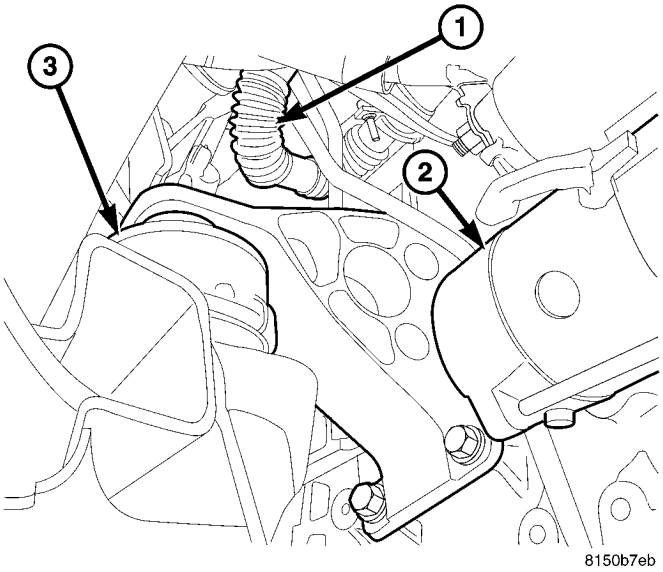

Fig. 118 LEFT ENGINE MOUNT

1 - EGR TUBE
2 - STARTER
3 - LEFT ENGINE MOUNT

(1) Position the engine mount and hand tighten the retaining bolts (Fig. 118).

LEFT MOUNT (Continued)

(2) Lower the engine mount and through bolts into the engine mount support.
(3) Lower the vehicle.
(4) Install the left upper engine mount bolt-.Tighten bolt to 110 N·m (82 lbs. ft.) (Fig. 118).
(5) Raise and support the vehicle.
(6) Tighten remaining mount to engine bolts to 60 N·m (44 lbs. ft.) starting with the left upper bolt and continuing clockwise (Fig. 118).
(7) Tighten engine mount through bolts to 110 N·m (82 lbs. ft.) (Fig. 118).
(8) Lower the vehicle.
(9) Install the cooling fan and shroud (Refer to 7 - COOLING/ENGINE/RADIATOR FAN - INSTALLATION).
(10) Connect the negative battery cable.

RIGHT MOUNT

REMOVAL

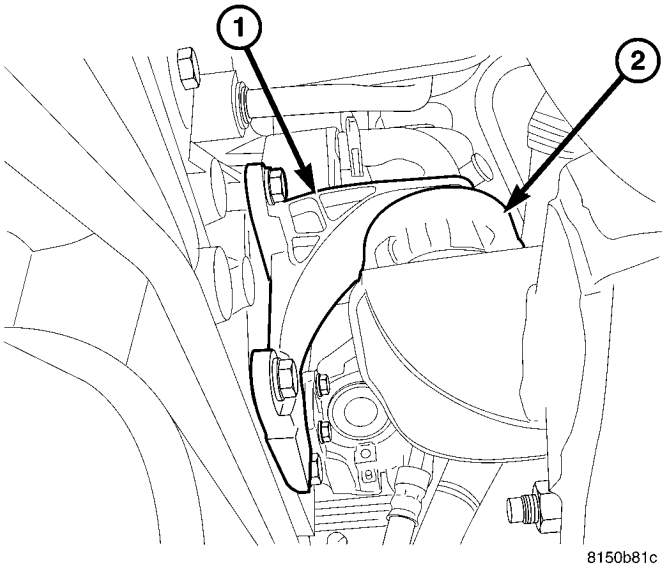

Fig. 119 RIGHT ENGINE MOUNT

1 - RIGHT ENGINE MOUNT BRACKET
2 - RIGHT ENGINE MOUNT

(1) Disconnect the negative battery cable.
(2) Remove the cooling fan and shroud.
(3) Loosen the upper engine mount fastener at the engine mount bracket (Fig. 119).
(4) Raise and support the vehicle.
(5) Loosen the lower engine mount fastener.

NOTE: Care must be taken not to damage the wiring harnesses above the transmission when lifting the engine.

(6) Using a suitable jack, raise and support the engine

(7) Remove the engine mount bolts and engine mount (Fig. 119)

INSTALLATION

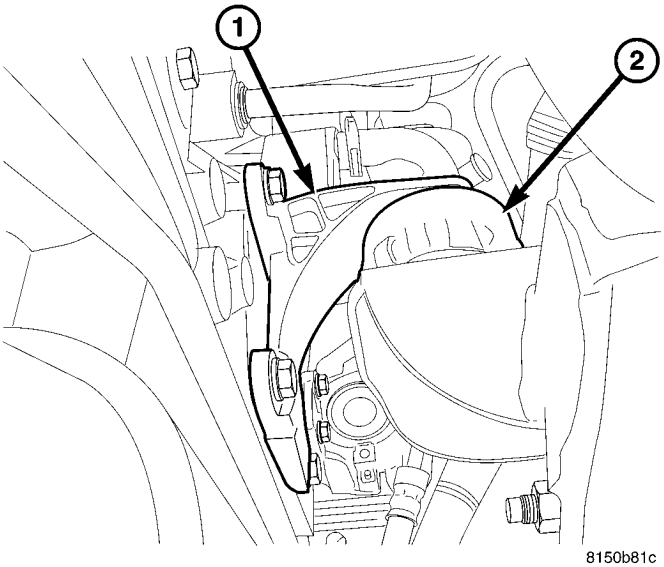

Fig. 120 RIGHT ENGINE MOUNT

1 - RIGHT ENGINE MOUNT BRACKET
2 - RIGHT ENGINE MOUNT

(1) Position the engine mount and hand tighten the engine mount bracket bolts. Tighten bolts to 60 N·m (44 lbs. ft.) (Fig. 120).
(2) Lower the vehicle and tighten the upper engine mount fastener to 110 N.m (82 ft. lbs.).
(3) Raise the engine.
(4) Tighten the engine mount bracket bolts to 60 N·m (44 lbs. ft.), starting with the right uppe,r then left upper bolt, continuing to the right lower and finishing with the left lower bolt. (Fig. 120).
(5) Tighten the engine mount lower fastener to 110 N.m (82 ft. lbs.).
(6) Lower the vehicle.
(7) Install the cooling fan and shroud (Refer to 7 - COOLING/ENGINE/RADIATOR FAN - INSTALLATION).
(8) Connect the negative battery cable.

OIL

DESCRIPTION

Refer to the appropriate owner manual for oil specifications.

OIL PAN

REMOVAL

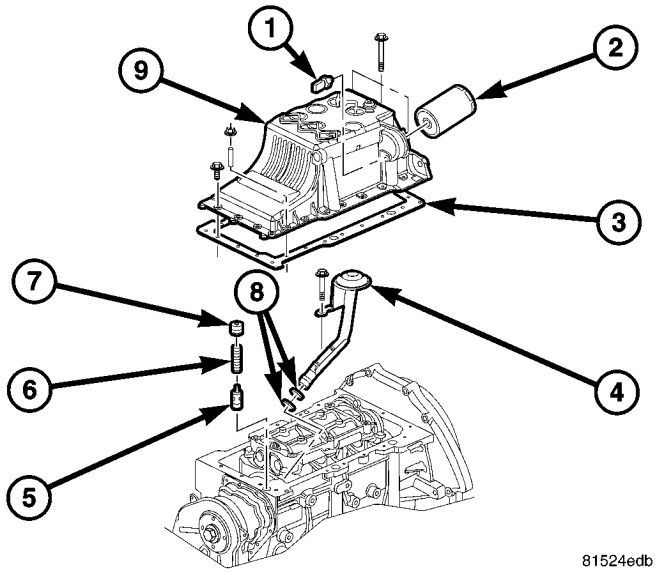

Fig. 121 OIL PAN

1 - OIL SENDING UNIT
2 - OIL FILTER
3 - GASKET
4 - OIL PUMP PICK UP TUBE
5 - OIL PRESSURE RELIEF VALVE PLUNGER
6 - OIL PRESSURE RELIEF VALVE SPRING
7 - OIL PRESSURE RELIEF VALVE CAP
8 - O RINGS
9 - OIL PAN

(1) Disconnect negative battery cable.

(2) Remove engine cover (Refer to 9 - ENGINE - REMOVAL).

NOTE: When installing engine support fixture, care must be taken not to damage the hood ajar switch mounted to the right inner fender.

(3) Install engine support fixture, special tool #8534.

(4) Raise vehicle on hoist.

(5) Remove both front wheel and tire assemblies.

(6) Remove front skid plate (if equipped).

(7) Drain engine oil.

(8) Disconnect the front drive shaft from the front drive axle,

(9) Loosen both engine mount through bolts.

(10) Lower vehicle.

(11) Raise engine using support fixture, special tool #8534, until the viscous fan almost touches the fan shroud.

(12) Raise vehicle on hoist.

(13) Support the front cradle assembly with a suitable lifting devise.

(14) Mark the front cradle to under body position to assure proper alignment during assembly.

(15) Remove both inner rail cradle alignment bolts in the front wheel housing.

(16) Loosen both power steering gear retaining bolts, leave the retaining nuts on the bolts.

(17) Loosen power steering lines from cradle.

(18) Remove both lower front strut bolts.

(19) Loosen both front cradle mounting bolts.

(20) Loosen both rear cradle mounting bolts.

(21) Disconnect the oil sending unit harness connector.

(22) Remove all oil pan retaining bolts, separate the oil level indicator tube from the pan and lower oil pan (Fig. 121).

(23) Lower front cradle using the suitable lifting devise until enough clearance is obtained to remove the oil pan.

INSTALLATION

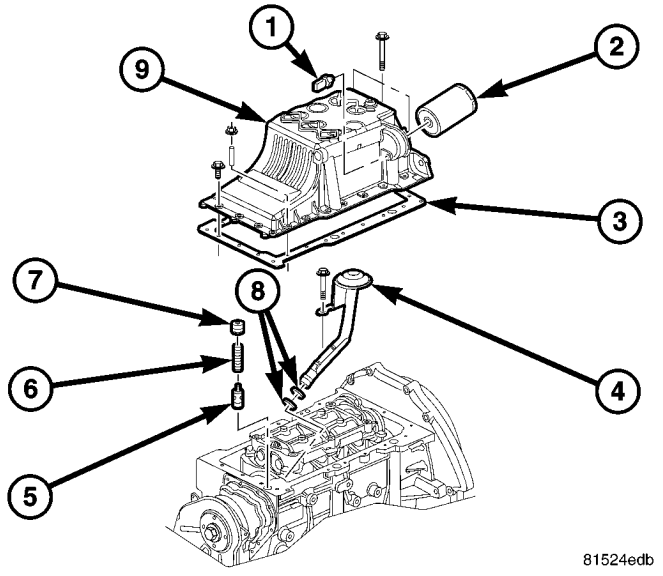

Fig. 122 OIL PAN

1 - OIL SENDING UNIT
2 - OIL FILTER
3 - GASKET
4 - OIL PUMP PICK UP TUBE
5 - OIL PRESSURE RELIEF VALVE PLUNGER
6 - OIL PRESSURE RELIEF VALVE SPRING
7 - OIL PRESSURE RELIEF VALVE CAP
8 - O RINGS
9 - OIL PAN

(1) Clean oil pan and sealing surfaces. Inspect oil pan and engine block.

OIL PAN (Continued)

(2) Install a new oil filter on the oil pan.

NOTE: If installing a new oil pan, exchange the oil sending unit and install a new oil filter.

(3) Install oil pan, gasket, oil pan retaining bolts, hand tight. (Fig. 122).

(4) Push the oil pan against adaptor plate and tighten transmission to oil pan bolts first.

(5) Tighten oil pan bolts to 14.7N·m (130 lbs.in.), tighten oil pan nuts to 24.5 N·m (217 in.lbs.), beginning with the center bolts and then tighten the remaining fasteners in a clockwise rotation. Retighten the center two bolts again after all bolts are tighten to specification.

(6) Raise the front cradle using a suitable lifting devise and align the cradle with the underbody marks made during the removal procedure.

(7) Torque the cradle mounting bolts to 122 N·m (90 lbs. ft.).

(8) Torque the cleves bolts to 136N·m (100 ft. lbs.).

(9) Torque the inner rail mounting bolts to 47 N·m (35 lbs. ft.).

(10) Torque the steering gear mounting bolts to 162N·m (120 lbs. ft.).

(11) Remove the cradle support devise and lower the vehicle.

(12) Lower the engine using support fixture, special tool #8534, until the engine mount through bolts are seated in the cradle.

(13) Raise the vehicle.

(14) Torque engine mount through bolts to 88N·m (65 lbs. ft.).

(15) Connect the oil sending unit harness connector.

(16) Install front axle skid plate (if equipped) (Refer to 13 - FRAME & BUMPERS/FRAME/FRONT SKID PLATE - INSTALLATION).

(17) Install both front wheel and tire assemblies (Refer to 22 - TIRES/WHEELS/WHEELS - STANDARD PROCEDURE) tighten to 115–155 N·m (85–115 lbs. ft.).

NOTE: When removing engine support fixture, care must be taken not to damage the hood ajar switch mounted to the right inner fender well (if equipped).

(18) Lower the vehicle and remove the engine support fixture.

(19) Refill engine to proper level with the correct viscosity engine oil.

(20) Connect negative battery cable.

(21) Start engine and inspect for leaks.

(22) Install engine cover (Refer to 9 - ENGINE - INSTALLATION).

(23) Perform complete front wheel alignment (Refer to 2 - SUSPENSION/WHEEL ALIGNMENT - STANDARD PROCEDURE).

OIL PRESSURE RELIEF VALVE

DESCRIPTION

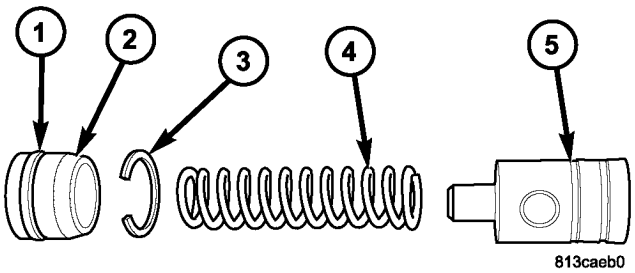

Fig. 123 OIL PRESSURE RELIEF VALVE

1 - O-RING
2 - OIL PRESSURE RELIEF VALVE CAP
3 - CLIP
4 - OIL PRESSURE RELIEF VALVE SPRING
5 - OIL PRESSURE RELIEF VALVE PLUNGER

The oil pressure relief valve mounts in the front of the engine block and is used to control oil flow through the engines lubrication system (Fig. 123).

REMOVAL

(1) Remove engine oil pan (Refer to 9 - ENGINE/LUBRICATION/OIL PAN - REMOVAL).

(2) Using special tool VM.1054, remove oil pressure relief valve from engine block (Fig. 124).

INSTALLATION

(1) Thoroughly clean all components and relief valve pocket in cylinder block.

(2) Lubricate all oil pressure relief valve components with engine oil.

(3) Install oil pressure relief valve plunger, spring, and cap.

WARNING: DO NOT strike the oil pressure valve cap with a hammer

OIL PRESSURE RELIEF VALVE (Continued)

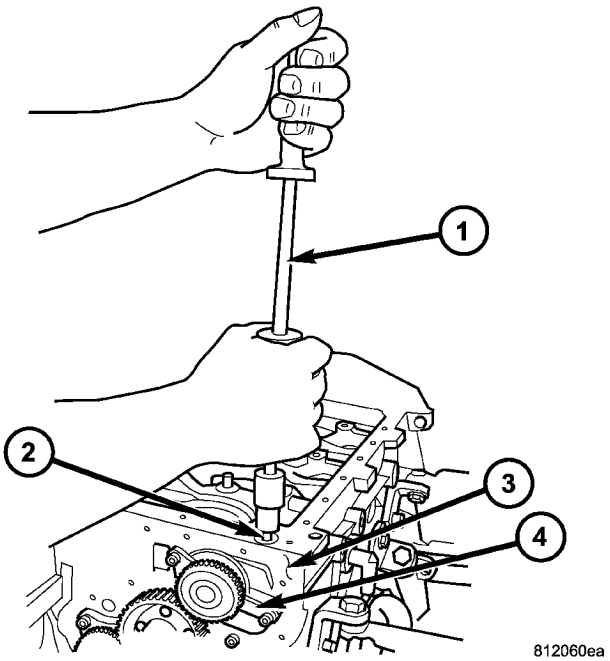

Fig. 124 OIL PRESSURE RELIEF VALVE REMOVAL

1 - VM.1054
2 - OIL PRESSURE RELIEF VALVE
3 - ENGINE BLOCK
4 - OIL PUMP

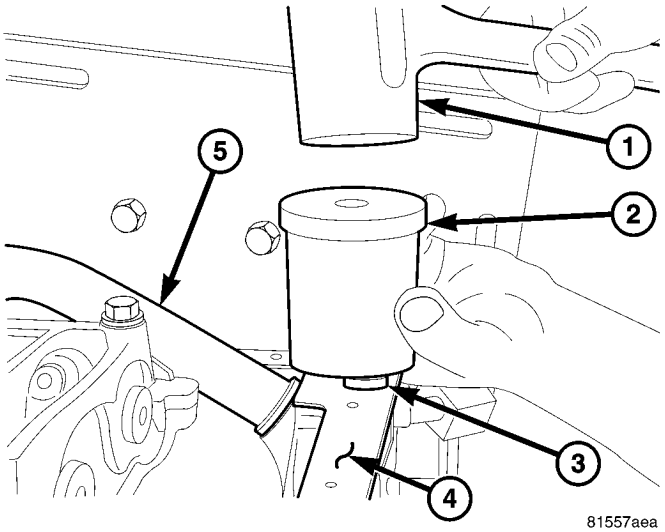

Fig. 125 OIL PRESSURE RELIEF VALVE SEATING

1 - HAMMER
2 - DRIVER
3 - OIL PRESSURE RELIEF VALVE CAP
4 - ENGINE BLOCK SURFACE
5 - OIL PICK UP TUBE

CAUTION: Care must be taken not to interfere with the engine front cover or the oil pick up tube when seating the oil relief valve cap. Failure to install the valve cap flush with the engine block surface correctly will result in low oil pressure and possible engine damage.

(4) Using a driver with a flat surface, carefully tap the oil pressure relief valve cap into place until the cap seats flush with engine block (Fig. 125).

(5) Install oil pan (Refer to 9 - ENGINE/LUBRICATION/OIL PAN - INSTALLATION).

OIL PRESSURE SENDING UNIT

DESCRIPTION

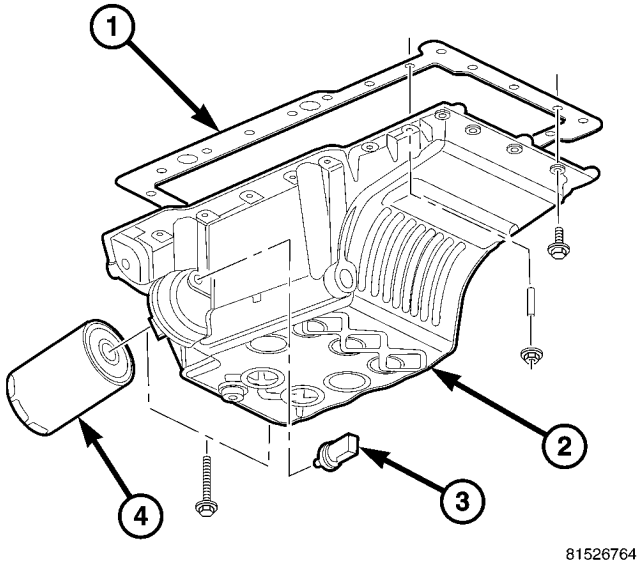

Fig. 126 OIL PRESSURE SENDING UNIT

1 - OIL PAN GASKET
2 - OIL PAN
3 - OIL SENDING UNIT
4 - OIL FILTER

The oil pressure sending unit is located on the right side of the oil pan. The sending unit screws into one of the engines main oil galleys (Fig. 126).

OPERATION

The oil pressure sending unit uses three circuits. They are:

- A signal circuit to the ECM.
- A sensor ground circuit through the ECM.
- A 5 volt reference circuit from the ECM.

The oil pressure sending unit returns a voltage signal back to the ECM relating oil pressure. Ground for the sensor is supplied by the ECM.

REMOVAL

(1) Disconnect the negative battery cable.

(2) Raise and support the vehicle.

(3) Remove the front skid plate (Fig. 127).

(4) Disconnect the sending unit electrical connector.

OIL PRESSURE SENDING UNIT (Continued)

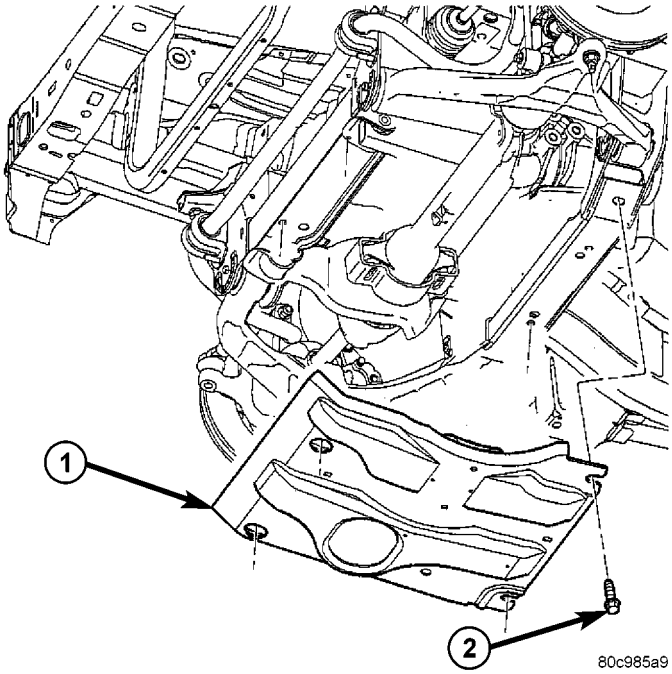

Fig. 127 SKID PLATE

1 - SKID PLATE
2 - BOLTS (4)

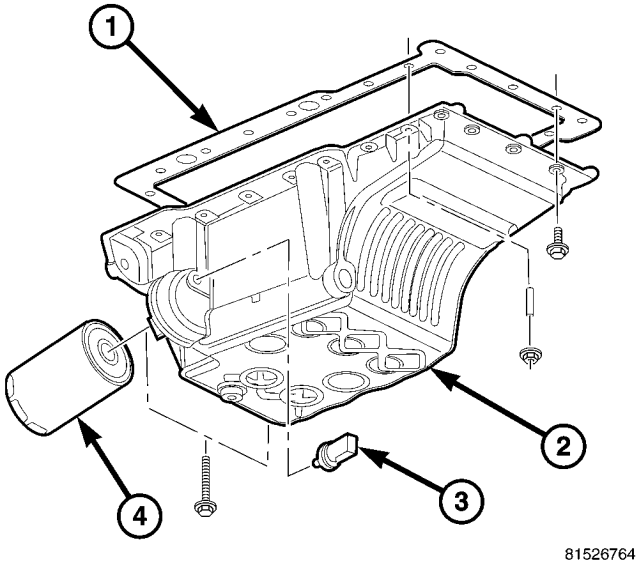

Fig. 128 OIL SENDING UNIT

1 - OIL PAN GASKET
2 - OIL PAN
3 - OIL SENDING UNIT
4 - OIL FILTER

(5) Place an oil drain under the sending unit and unscrew (Fig. 128).

INSTALLATION

(1) Screw oil pressure sending unit into oil pan and tighten to 14.2 N·m (126 in. lbs.) (Fig. 129).

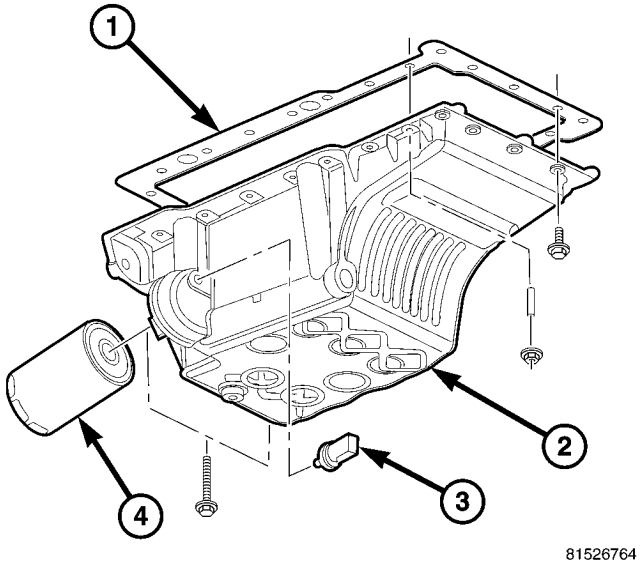

Fig. 129 OIL SENDING UNIT

1 - OIL PAN GASKET
2 - OIL PAN
3 - OIL SENDING UNIT
4 - OIL FILTER

(2) Connect the electrical connector.

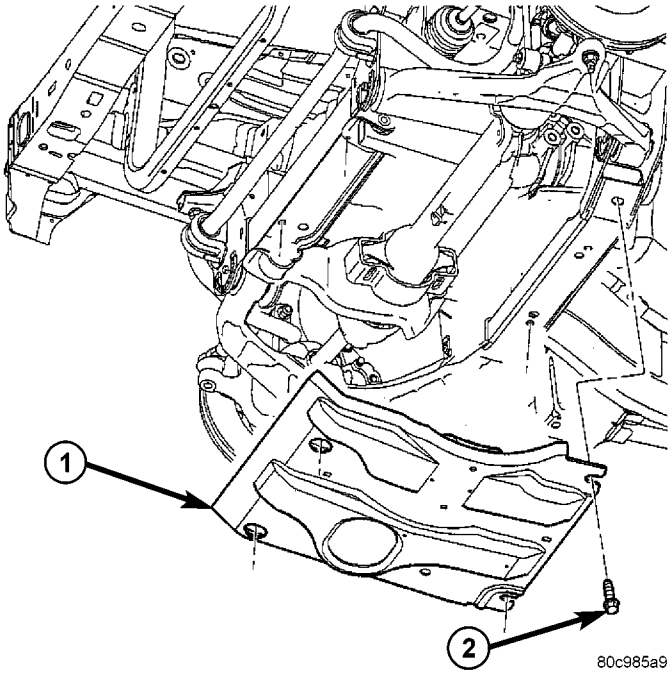

Fig. 130 SKID PLATE

1 - SKID PLATE
2 - BOLTS (4)

(3) Install the front skid plate and tighten fasteners to 61 N·m (45 ft. lbs.) (Fig. 130).

(4) Check and fill engine oil as necessary.

(5) Connect the negative battery cable.

(6) Start engine and inspect for leaks.

OIL PUMP

REMOVAL

REMOVAL - OIL PUMP PICKUP TUBE

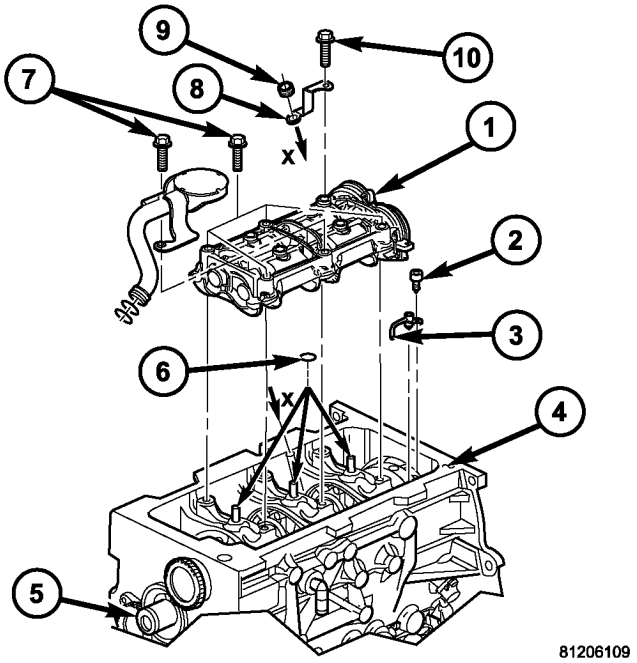

Fig. 131 OIL PUMP PICKUP TUBE ASSEMBLY

1 - BALANCE SHAFT
2 - OIL JET RETAINING BOLT
3 - OIL JET
4 - ENGINE BLOCK
5 - CRANKSHAFT
6 - O- RING(S)
7 - BALANCE SHAFT RETAINING BOLTS
8 - OIL LEVEL INDICATOR TUBE RETAINER
9 - RUBBER BUSHING
10 - RETAINING BOLT

(1) Disconnect negative battery cable.
(2) Raise vehicle on hoist.
(3) Remove oil pan (Refer to 9 - ENGINE/LUBRICATION/OIL PAN - REMOVAL).
(4) Remove oil pump pickup tube retaining bolt and pull pickup tube from engine block. Discard O-rings. (Fig. 131)

REMOVAL - OIL PUMP

(1) Disconnect negative battery cable.
(2) Remove cooling fan and fan drive viscous clutch assembly (Refer to 7 - COOLING/ENGINE/FAN DRIVE VISCOUS CLUTCH - REMOVAL).
(3) Remove accessory drive belt (Refer to 7 - COOLING/ACCESSORY DRIVE/DRIVE BELTS - REMOVAL).
(4) Remove cooling fan support (Refer to 7 - COOLING/ENGINE/RADIATOR FAN - REMOVAL).
(5) Remove vibration damper (Refer to 9 - ENGINE/ENGINE BLOCK/VIBRATION DAMPER - REMOVAL).
(6) Remove the power steering pump pulley.
(7) Remove timing belt outer cover (Refer to 9 - ENGINE/VALVE TIMING/TIMING BELT / CHAIN COVER(S) - REMOVAL).

NOTE: The crankshaft must be rotated to 90 degrees ATDC (Refer to 9 - ENGINE/VALVE TIMING - STANDARD PROCEDURE).

(8) Remove timing belt (Refer to 9 - ENGINE/VALVE TIMING/TIMING BELT/CHAIN AND SPROCKETS - REMOVAL).
(9) Remove timing belt inner cover (Refer to 9 - ENGINE/VALVE TIMING/TIMING BELT / CHAIN COVER(S) - REMOVAL).
(10) Remove front engine cover (Refer to 9 - ENGINE/ENGINE BLOCK/ENGINE COVER - REMOVAL).

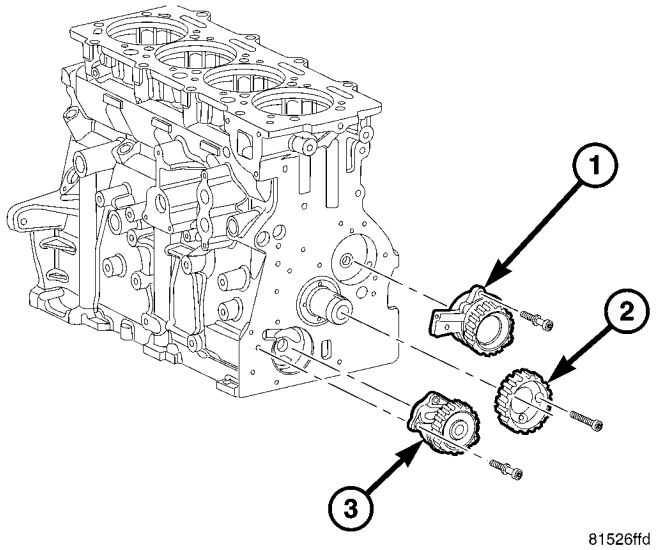

Fig. 132 ENGINE OIL PUMP

1 - VACUUM PUMP
2 - CRANKSHAFT SPROCKET
3 - OIL PUMP

(11) Remove crankshaft sprocket (Fig. 132).
(12) Remove oil pump retaining bolts and remove pump from engine block (Fig. 132).

OIL PUMP (Continued)

INSTALLATION

INSTALLATION - OIL PUMP PICKUP TUBE

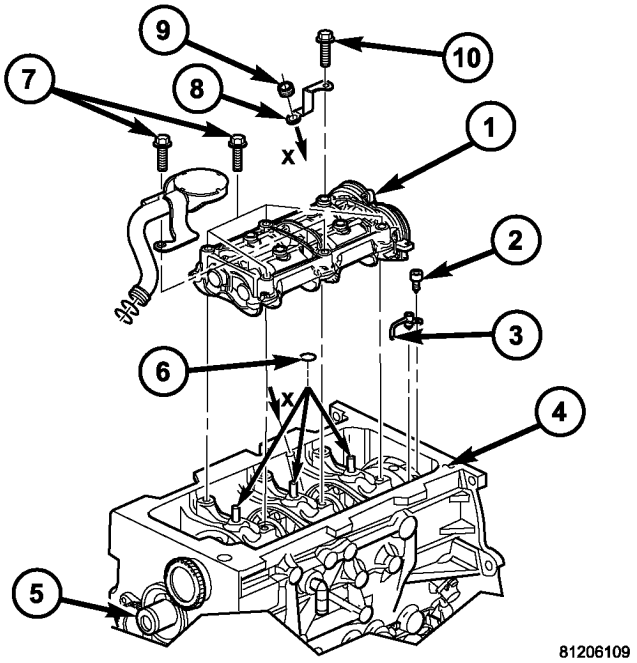

Fig. 133 OIL PUMP PICKUP TUBE ASSEMBLY

1 - BALANCE SHAFT
2 - OIL JET RETAINING BOLT
3 - OIL JET
4 - ENGINE BLOCK
5 - CRANKSHAFT
6 - O- RING(S)
7 - BALANCE SHAFT RETAINING BOLTS
8 - OIL LEVEL INDICATOR TUBE RETAINER
9 - RUBBER BUSHING
10 - RETAINING BOLT

(1) Lubricate o-rings on oil pump pickup tube with engine oil.

(2) Install pickup tube in engine block and install retaining bolt. Torque bolt to 32.4N·m. (24 ft.lbs.). (Fig. 133).

(3) Install oil pan (Refer to 9 - ENGINE/LUBRICATION/OIL PAN - INSTALLATION).

(4) Refill engine oil to proper level.

(5) Connect negative battery cable.

INSTALLATION - OIL PUMP

(1) Lubricate oil pump rotor with engine oil.

(2) Install oil pump in bore in engine block (Fig. 134).

(3) Install oil pump retaining bolts. Torque bolts to 10.8N·m. (96 in. lbs.) (Fig. 134).

(4) Install crankshaft sprocket. Torque bolts to 10.8N·m. (96 in. lbs.) (Fig. 134).

(5) Install front engine cover and seal (Refer to 9 - ENGINE/ENGINE BLOCK/ENGINE COVER - INSTALLATION).

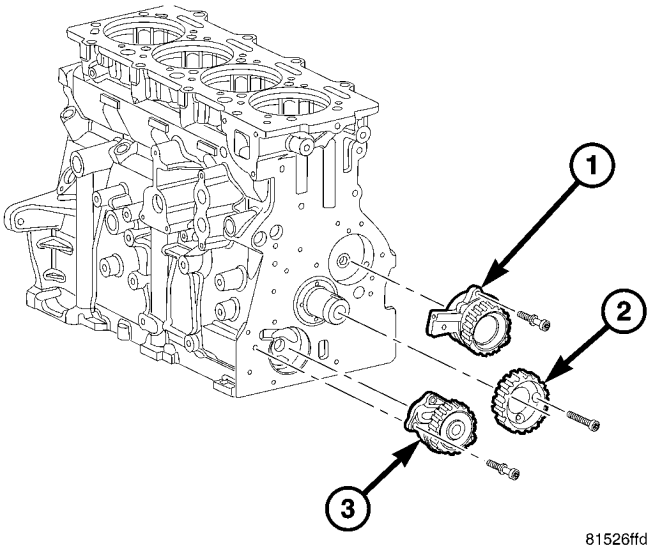

Fig. 134 ENGINE OIL PUMP

1 - VACUUM PUMP
2 - CRANKSHAFT SPROCKET
3 - OIL PUMP

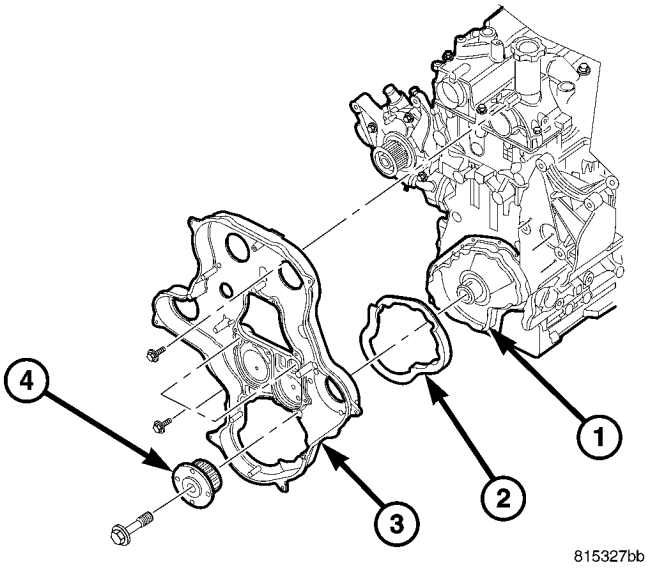

Fig. 135 FRONT ENGINE COVER

1 - FRONT ENGINE COVER
2 - SEAL
3 - TIMING BELT INNER COVER
4 - LOWER TIMING BELT GEAR

(6) Install timing belt inner cover (Refer to 9 - ENGINE/VALVE TIMING/TIMING BELT / CHAIN COVER(S) - INSTALLATION).

(7) Install the lower timing belt gear and hand tighten fastener (Fig. 135).

OIL PUMP (Continued)

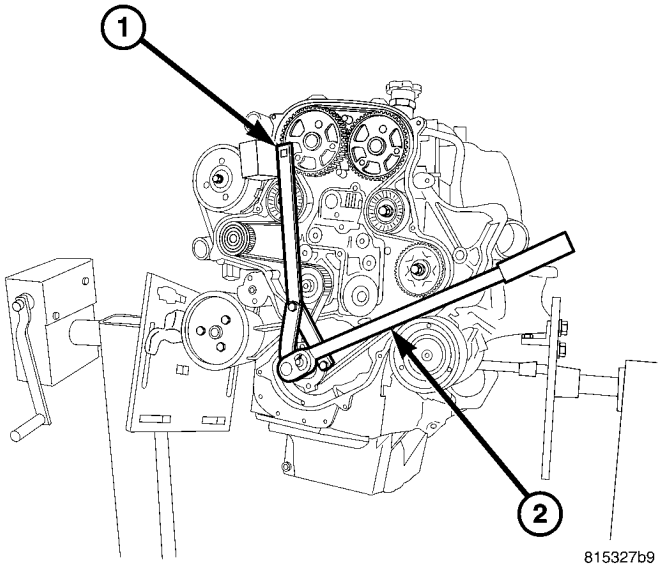

Fig. 136 SPECIAL TOOL #6958

1 - SPECIAL TOOL # 6958
2 - WRENCH

(8) Connect special tool #6958 to the lower timing gear using the vibration damper bolts and tighten the timing gear fastener to 275N·m (203 ft. lbs) (Fig. 136).

(9) Remove special tool #6958.

(10) Install timing belt (Refer to 9 - ENGINE/VALVE TIMING/TIMING BELT/CHAIN AND SPROCKETS - INSTALLATION) .

(11) Install timing belt outer cover (Refer to 9 - ENGINE/VALVE TIMING/TIMING BELT / CHAIN COVER(S) - INSTALLATION).

(12) Install vibration damper (Refer to 9 - ENGINE/ENGINE BLOCK/VIBRATION DAMPER - INSTALLATION).

(13) Install power steering pump pulley.

(14) Install cooling fan support (Refer to 7 - COOLING/ENGINE/RADIATOR FAN - INSTALLATION).

(15) Install accessory drive belt (Refer to 7 - COOLING/ACCESSORY DRIVE/DRIVE BELTS - INSTALLATION).

(16) Install cooling fan and fan drive viscous clutch assembly (Refer to 7 - COOLING/ENGINE/FAN DRIVE VISCOUS CLUTCH - INSTALLATION).

(17) Connect negative battery cable.

OIL JET

DESCRIPTION

There are four oil jets installed in the engine block. These oil jets are used to cool and lubricate the piston assemblies (Fig. 137).

REMOVAL

CAUTION: Use caution when removing and installing oil jets. Damage to oil jet nozzle could cause severe engine damage. Care must be taken not to damage the crankshaft tone ring when removing cylinder number four oil jet.

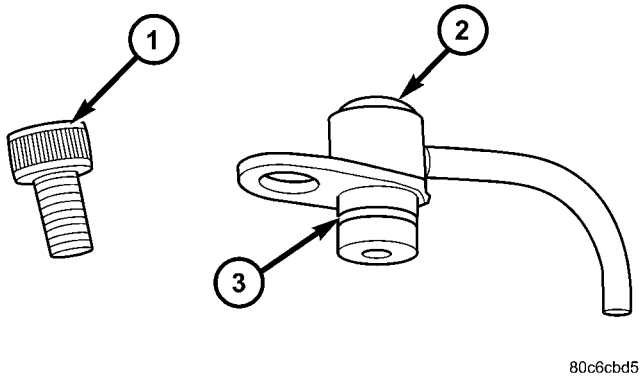

Fig. 137 OIL JET ASSEMBLY

1 - RETAINING BOLT
2 - OIL JET
3 - O-RING

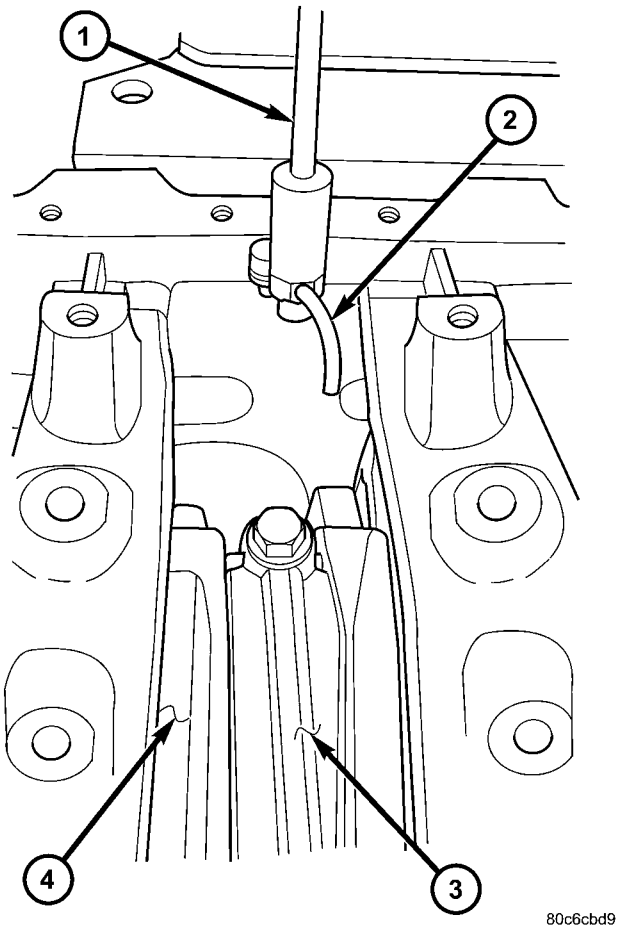

Fig. 138 OIL JET REMOVAL/INSTALLATION

1 - SPECIAL TOOL VM.1060
2 - OIL JET
3 - CONNECTING ROD
4 - CRANKSHAFT

OIL JET (Continued)

NOTE: Remove oil jets before removing piston, crankshaft liners.

(1) Disconnect negative battery cable.
(2) Raise vehicle on hoist.
(3) Remove oil pan (Refer to 9 - ENGINE/LUBRICATION/OIL PAN - REMOVAL).

NOTE: When removing oil jet from cylinder number four, care must be taken not to damage the crankshaft tone ring.

(4) Using special tool VM.1060 to hold oil jet. Remove oil jet retaining bolt and remove oil jet from engine block (Fig. 138).

INSTALLATION

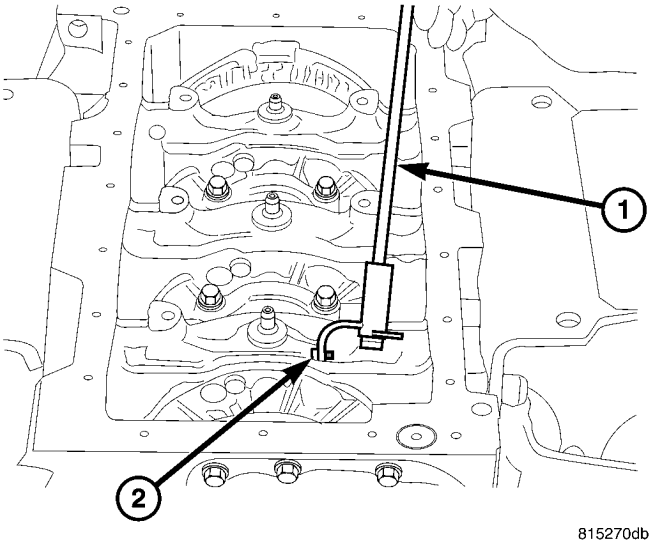

Fig. 139 OIL JET WITH VM1060

1 - SPECIAL TOOL VM1060
2 - OIL JET

CAUTION: Use caution when removing and installaing oil jets. Damage to oil jet nozzle could cause severe engine damage. care must be taken not to damage the crankshaft tone ring when installing cylinder number four oil jet.

NOTE: Carefully install the oil jets After assembling the engine liners, crankshaft and pistons.

(1) Lubricate o-ring on oil jet.
(2) Using special tool VM.1060, install oil jet in engine block (Fig. 139)
(3) Install oil jet retaining bolt. Torque bolt to 10.8N·m.(96 in.lbs.).
(4) Install oil pan (Refer to 9 - ENGINE/LUBRICATION/OIL PAN - INSTALLATION).
(5) Refill engine oil to proper level.
(6) Connect negative battery cable.

OIL SEPARATOR

REMOVAL

(1) Remove the engine cover.
(2) Remove the oil separator fasteners and oil separator (Fig. 140).

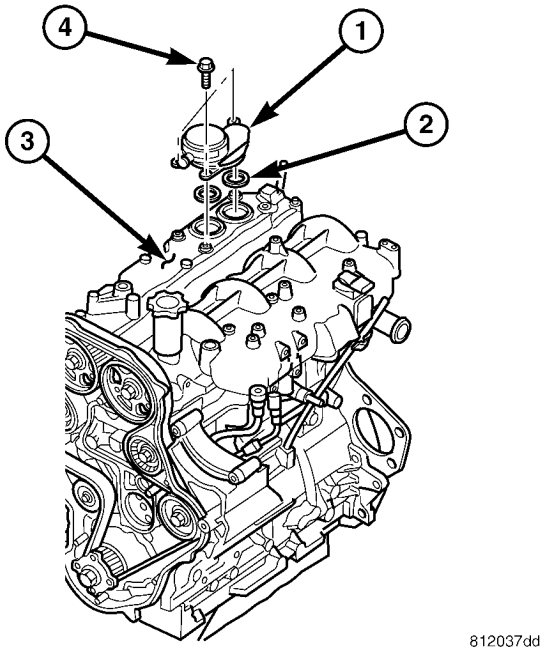

Fig. 140 OIL SEPARATOR

1 - OIL SEPARATOR
2 - O-RING(S)
3 - CYLINDER HEAD COVER
4 - BOLT (S)

OIL SEPARATOR (Continued)

INSTALLATION

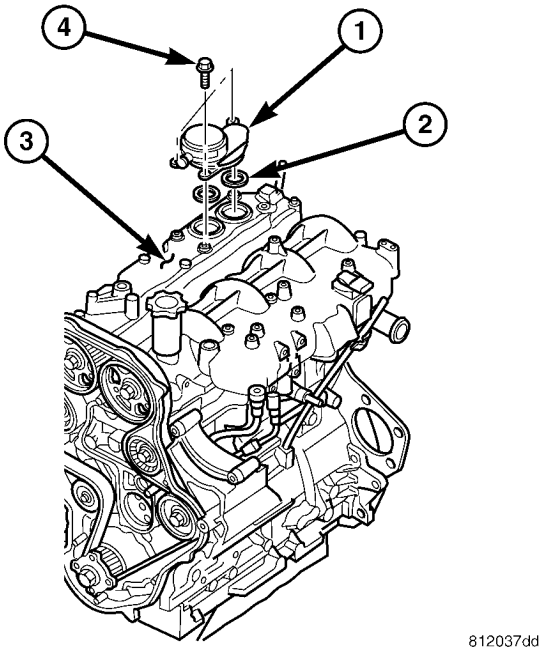

Fig. 141 OIL SEPARATOR

1 - OIL SEPARATOR
2 - O-RING(S)
3 - CYLINDER HEAD COVER
4 - BOLT (S)

NOTE: Inspect the oil drain back access hole in the intake manifold/cylinder head cover to assure that it is free of obstruction.

(1) Lubricate the oil separator o-rings with clean engine oil (Fig. 141).

(2) Carefully position and push down on the oil separator to seat (Fig. 141).

(3) Install the oil separator retaining fasteners. Tighten fasteners to 10.8 N·m (96 lbs. in.) (Fig. 141).

OIL COOLER

DESCRIPTION

A plate style external oil cooler is mounted to the side of the engine block, below the turbocharger. Engine coolant is used to cool the oil. The gasket should be replaced anytime you are servicing the oil cooler. When replacing the engine block, inspect the oil coller for damage or restrictions. If the oil cooler is not damaged or restricted, it can be reused (Fig. 142).

REMOVAL

(1) Disconnect the negative battery cable.

(2) Drain the cooling system.

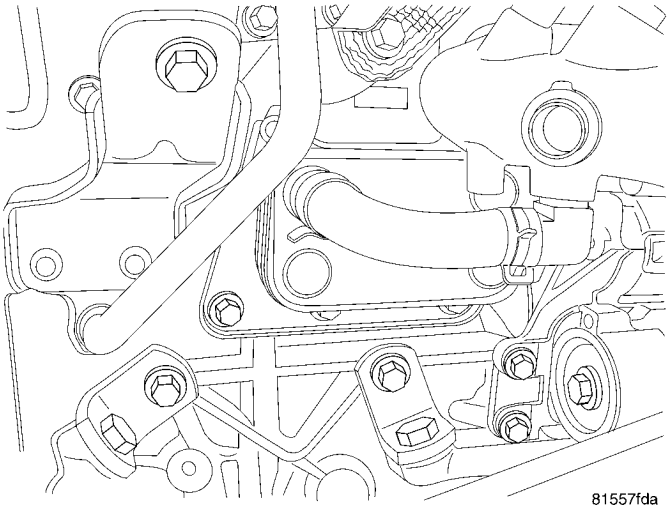

Fig. 142 ENGINE OIL COOLER

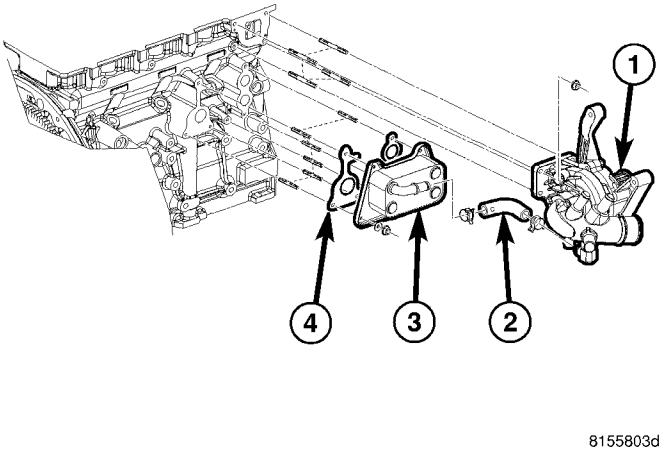

Fig. 143 ENGINE OIL COOLER

1 - WATER PUMP AND HOUSING ASSEMBLY
2 - COOLANT HOSE
3 - ENGINE OIL COOLER
4 - GASKET

(3) Remove the air cleaner assembly (Refer to 9 - ENGINE/AIR INTAKE SYSTEM/AIR CLEANER HOUSING - REMOVAL).

(4) Remove the coolant reservoir and hoses.

(5) Remove the charge air cooler hose between turbocharger and cooler.

(6) Remove the lower radiator hose at the water pump housing assembly.

(7) Remove the water pump housing assembly (Fig. 143).

(8) Remove the engine oil cooler (Fig. 143).

OIL COOLER (Continued)

INSTALLATION

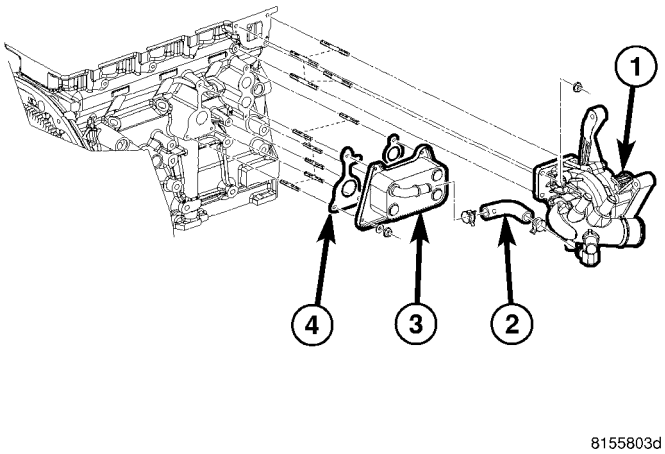

Fig. 144 ENGINE OIL COOLER

1 - WATER PUMP AND HOUSING ASSEMBLY
2 - COOLANT HOSE
3 - ENGINE OIL COOLER
4 - GASKET

(1) Clean all engine mating surfaces.
(2) Position the oil cooler and gasket. Install the fasteners and tighten to 10.8 N·m (96 in. lbs.) (Fig. 144).
(3) Install the water pump housing assembly with new gasket. Tighten fasteners to 24.5 N·m (18 ft. lbs.) (Fig. 144).
(4) Install the oil cooler coolant hose.
(5) Install the power steering reservoir.
(6) Install heater hoses at housing.
(7) Install lower radiator hose at housing.
(8) Install the charge air hose.
(9) Install coolant reservoir and hoses.
(10) Install air cleaner assembly (Refer to 9 - ENGINE/AIR INTAKE SYSTEM/AIR CLEANER HOUSING - INSTALLATION).
(11) Fill the coolant system
(12) Connect the negative battery cable
(13) Start engine, run until warm, turn the engine off, and inspect for leaks.

INTAKE MANIFOLD

DESCRIPTION

(Refer to 9 - ENGINE/CYLINDER HEAD/CYLINDER HEAD COVER(S) - DESCRIPTION)

REMOVAL

(1) (Refer to 9 - ENGINE/CYLINDER HEAD/CYLINDER HEAD COVER(S) - REMOVAL)

INSTALLATION

(1) (Refer to 9 - ENGINE/CYLINDER HEAD/CYLINDER HEAD COVER(S) - INSTALLATION)

EXHAUST MANIFOLD

REMOVAL

(1) (Refer to 11 - EXHAUST SYSTEM/TURBOCHARGER SYSTEM/TURBOCHARGER - REMOVAL)

INSTALLATION

(1) (Refer to 11 - EXHAUST SYSTEM/TURBOCHARGER SYSTEM/TURBOCHARGER - INSTALLATION)

VALVE TIMING

STANDARD PROCEDURE - LOCKING ENGINE 90 DEGREES AFTER TDC

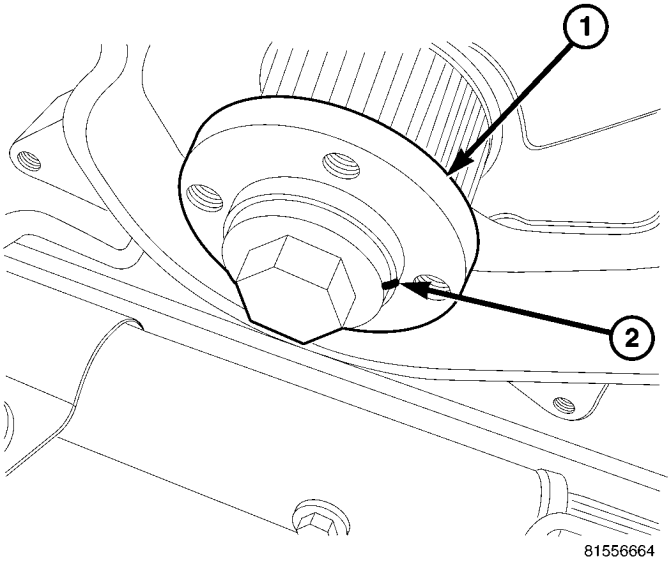

Fig. 145 FRONT CRANKSHAFT HUB

1 - FRONT CRANKSHAFT HUB
2 - WITNESS MARK

(1) Disconnect negative battery cable.
(2) Remove the vibration damper (Refer to 9 - ENGINE/ENGINE BLOCK/VIBRATION DAMPER - REMOVAL).

VALVE TIMING (Continued)

NOTE: Rotate the engine by the front crankshaft bolt until the witness mark next to the bolt in the front crankshaft hub reaches the 12 o'clock position, or TDC. Rotate the engine another 1/4 turn to the right, rotating the witness mark to the three o'clock position, or 90 degrees ATDC.

(3) Rotate engine by hand until the witness mark in the front crankshaft hub reaches the 3 O'clock position (Fig. 145).

(4) Raise and support the vehicle.

(5) Remove the splash shield.

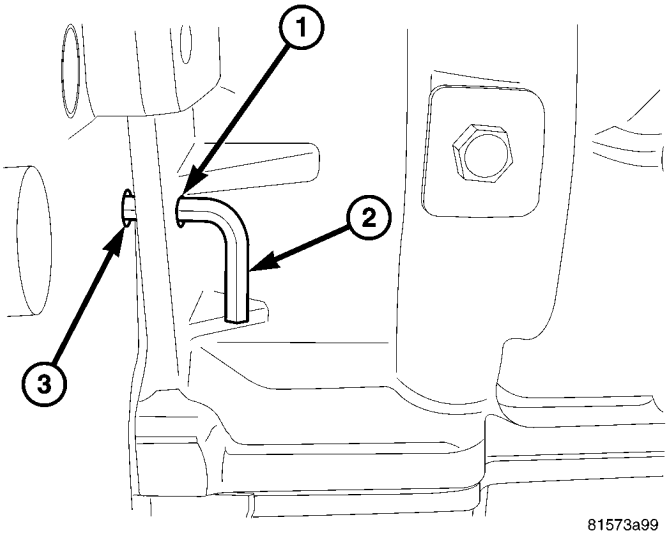

Fig. 146 ALLEN WRENCH CORRECTLY ALIGNED

1 - 90 DEGREES A.T.D.C. ACCESS HOLE
2 - ALLEN WRENCH
3 - 90 DEGREES A.T.D.C. HOLE IN DRIVE PLATE

CAUTION: The engine block, flywheel, and/or flex plate, has an alignment hole to assist in properly aligning the crankshaft before service. Failure to properly align the crankshaft may result in improper valve timing and engine damage.

(6) Insert the long end of a 6mm Allen wrench into the 90 degree ATDC access hole on the right lower side of the engine block. The engine is aligned properly when the short end of the Allen wrench is parallel to the rear of the engine block. (Fig. 146) .

(7) If the small end of the Allen wrench protrudes away from the engine block (alignment hole in the flywheel, flex plate too low) rotate the crankshaft hub bolt clockwise in small increments until proper alignment is obtained (Fig. 147).

CAUTION: DO NOT rotate the engine counterclockwise.

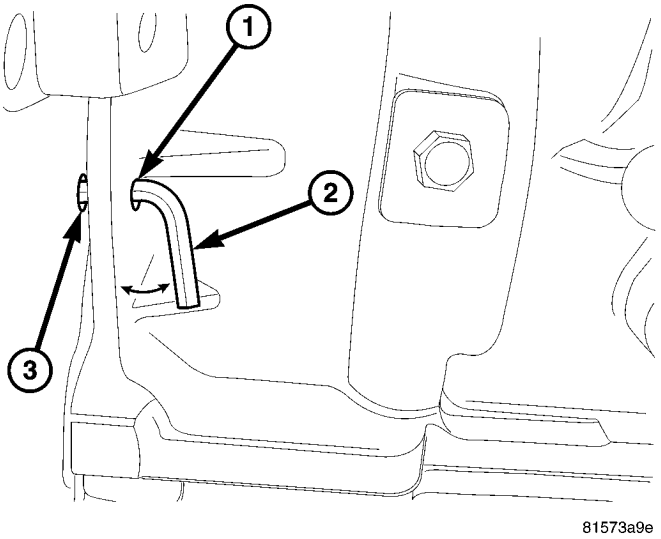

Fig. 147 FLYWHEEL ALIGNMENT HOLE LOW

1 - 90 DEGREES A.T.D.C. ACCESS HOLE
2 - ALLEN WRENCH
3 - 90 DEGREES A.T.D.C. HOLE IN DRIVE PLATE

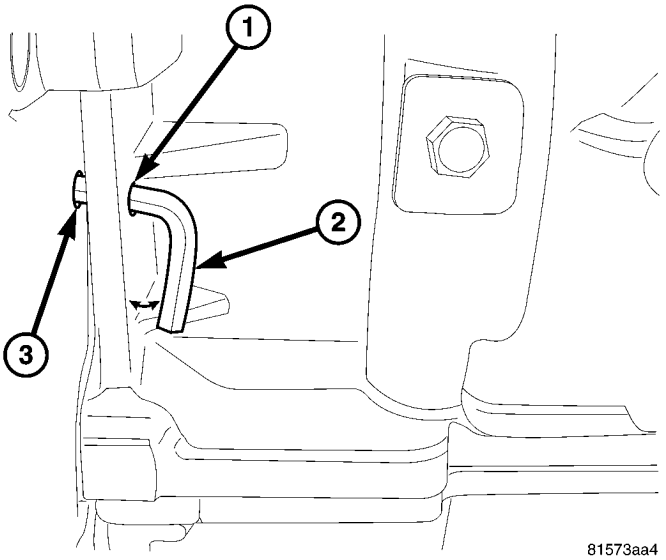

Fig. 148 FLYWHEEL ALIGNMENT HOLE HIGH

1 - 90 DEGREES A.T.D.C. ACCESS HOLE
2 - ALLEN WRENCH
3 - 90 DEGREES A.T.D.C. HOLE IN DRIVE PLATE

(8) If the small end of the Allen wrench is too close to the engine block (alignment hole in the flywheel, flex plate too high), remove the Allen wrench and rotate the crankshaft around again to the three O'clock position, or 90 degree ATDC, and begin the alignment sequence again (Fig. 148).

(9) Lower the vehicle.

(10) Remove engine cover (Refer to 9 - ENGINE COVER - REMOVAL).

VALVE TIMING (Continued)

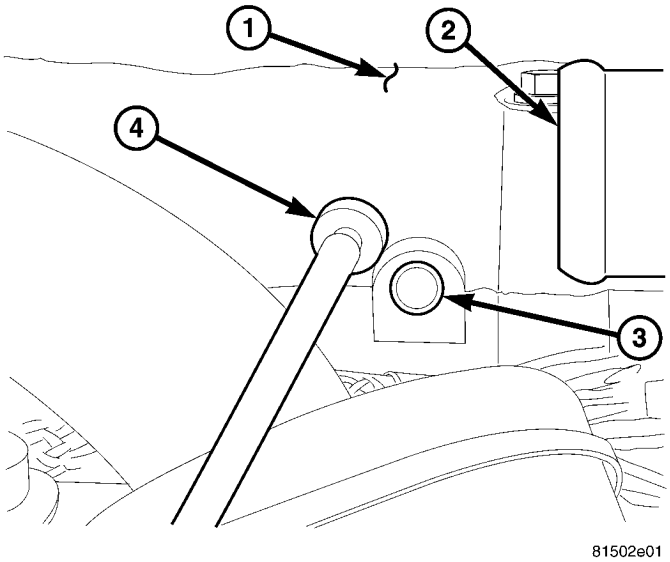

Fig. 149 EXHAUST CAMSHAFT ALIGNMENT ACCESS

1 - CYLINDER HEAD COVER
2 - THERMOSTAT HOUSING
3 - EXHAUST CAMSHAFT ALIGNMENT ACCESS HOLE
4 - SCREW

(11) Remove the exhaust camshaft access plug in cylinder head cover/intake manifold (Fig. 149).

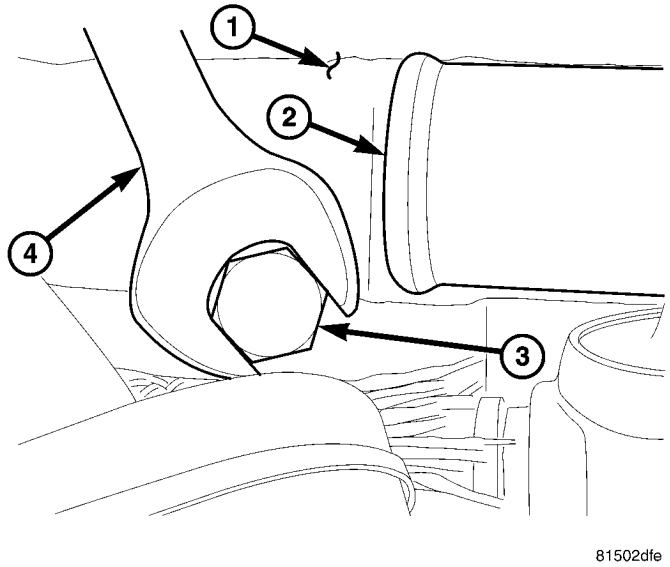

Fig. 150 EXHAUST CAMSHAFT ALIGNMENT PIN

1 - CYLINDER HEAD COVER
2 - THERMOSTAT HOUSING
3 - VM.1053
4 - WRENCH

CAUTION: DO NOT force the pin into the access hole. VM.1053 should screw in by hand and mount flush with the intake manifold/cylinder head cover. If the tool can not be inserted, remove the tool and rotate the engine another 180 degrees to the 3 O'clock position and try again.

(12) Insert VM.1053 to lock exhaust camshaft in position (Fig. 150).

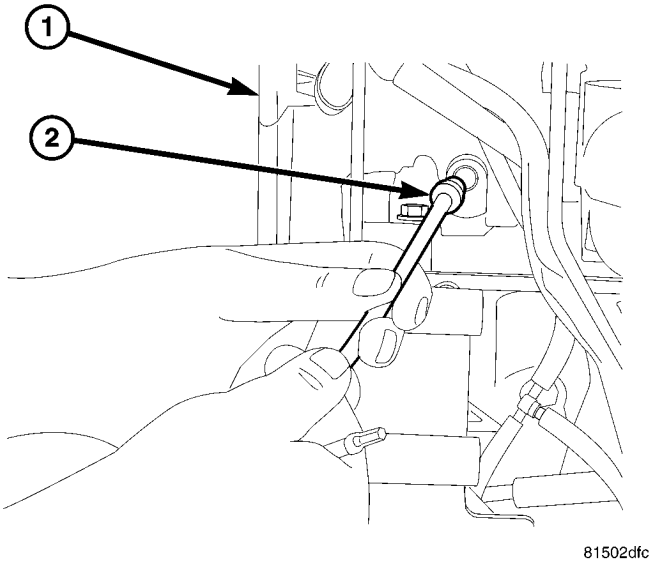

Fig. 151 INTAKE CAMSHAFT ALIGNMENT ACCESS

1 - INNER TIMING BELT COVER
2 - SCREW

(13) Remove the left plug in cylinder head cover/intake manifold (Fig. 151).

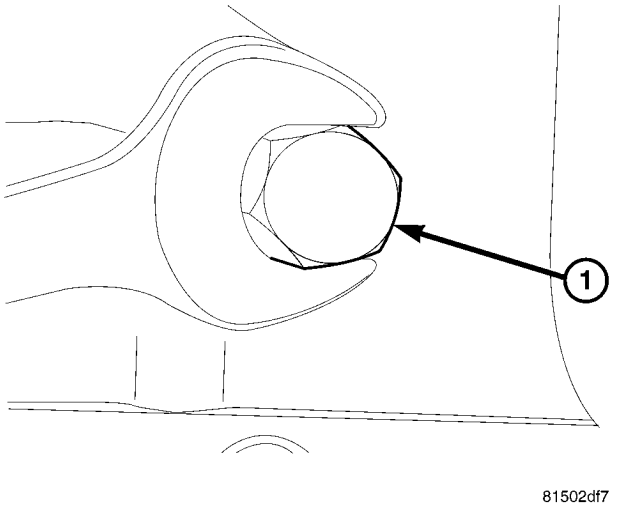

Fig. 152 INTAKE CAMSHAFT ALIGNMENT PIN

1 - VM.1052

(14) Insert VM.1052 to lock intake camshaft in position (Fig. 152).

(15) At this point the timing belt can be removed for service.

VALVE TIMING (Continued)

(16) After engine service is completed and timing belt reinstalled, remove both camshaft locking pins from cylinder head cover/intake manifold.

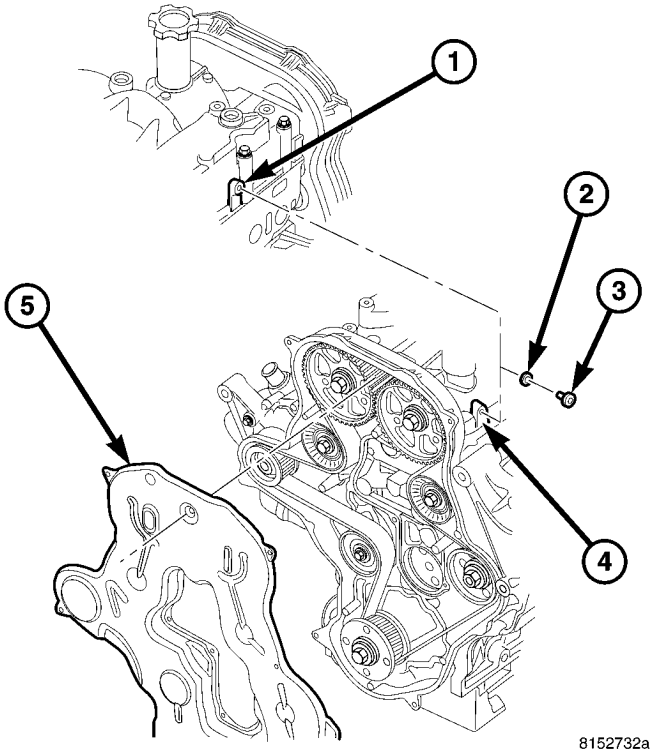

Fig. 153 CAMSHAFT ACCESS PLUGS

1 - EXHAUST CAMSHAFT ACCESS
2 - SEAL
3 - PLUG
4 - INTAKE CAMSHAFT ACCESS
5 - FRONT TIMING BELT COVER

(17) Install both camshaft access plugs. Tighten the access plugs to 10.8 N.m (95 in.lbs.) (Fig. 153).

(18) Install engine cover (Refer to 9 - ENGINE COVER - INSTALLATION).

(19) Connect negative battery cable.

BALANCE SHAFT

DESCRIPTION

The 2.8L Common Rail Diesel engine is equipped with two gear driven nodular cast iron balance shafts in a cast aluminum carrier. The balance shaft assembly is gear driven by the crankshaft and used to counteract engine vibration. (Fig. 154).

OPERATION

The balance shaft assembly includes four balancers on two shafts. The balance shafts are connected by helical gears, and the assembly is timed with the engine. The dual-counter rotating shafts rotate at twice the engine speed and decrease second order vertical shaking forces caused by component movement. Balance shaft oiling is provided through oil passages in the crankshaft carriers.

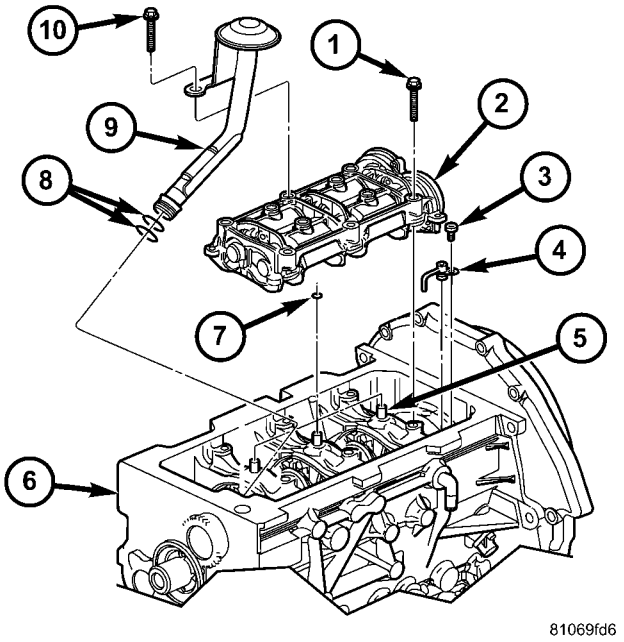

Fig. 154 OIL PICK-UP TUBE AND BALANCE SHAFT ASSEMBLY

1 - BALANCE SHAFT RETAINING BOLTS
2 - BALANCE SHAFT ASSEMBLY
3 - OIL JET RETAINING BOLT
4 - OIL JET
5 - CENTRAL CARRIER PINS
6 - ENGINE BLOCK
7 - CENTRAL CARRIER PIN O-RINGS
8 - OIL PUMP PICK UP TUBE O-RINGS
9 - OIL PUMP PICK-UP TUBE
10 - OIL PICK UP TUBE RETAINING BOLT

REMOVAL

(1) Disconnect negative battery cable.

(2) Raise vehicle on hoist.

(3) Remove oil pan (Refer to 9 - ENGINE/LUBRICATION/OIL PAN - REMOVAL).

(4) Remove oil pump pickup tube (Refer to 9 - ENGINE/LUBRICATION/OIL PUMP - REMOVAL).

(5) Remove balance shaft assembly and discard O-rings on the central carrier pins (Fig. 155).

INSTALLATION

CAUTION: Install new O-rings on the carrier pins and oil pick up tube before assembly.

BALANCE SHAFT (Continued)

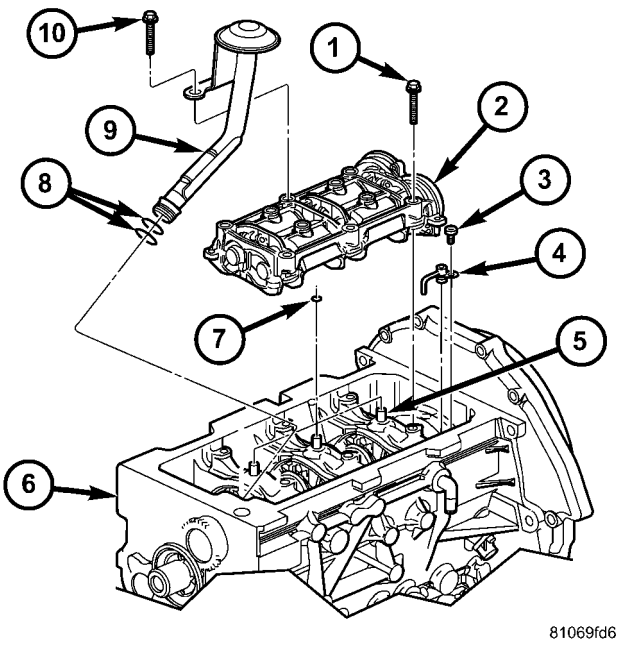

Fig. 155 OIL PICK-UP TUBE AND BALANCE SHAFT ASSEMBLY

1 - BALANCE SHAFT RETAINING BOLTS
2 - BALANCE SHAFT ASSEMBLY
3 - OIL JET RETAINING BOLT
4 - OIL JET
5 - CENTRAL CARRIER PINS
6 - ENGINE BLOCK
7 - CENTRAL CARRIER PIN O-RINGS
8 - OIL PUMP PICK UP TUBE O-RINGS
9 - OIL PUMP PICK-UP TUBE
10 - OIL PICK UP TUBE RETAINING BOLT

NOTE: Before installation of the balance shaft assembly, the # 1 cylinder must be brought to TDC, or the 12 O'clock position. There is a line on the front of the crankshaft hub, next to the front crankshaft bolt, that may assist the alignment.

(1) Remove the vibration damper and roll engine over by hand until the witness line on the front of the crankshaft hub is at the 12 O'clock, or TDC position. Once the # 1 cylinder is brought to TDC, the balance shaft assembly can be installed.

CAUTION: CARE MUST BE TAKEN DURING THE INSTALLATION OF THE DRIFT OR PUNCH. THE BACK SIDE OF THE COUNTER WEIGHTS ON THE BALANCE SHAFTS MUST BE IN THE UP POSITION BEFORE INSERTING THE TOOL INTO THE HOUSING.

(2) With balance shaft assembly on work bench. Insert a drift of a punch into balance shaft assembly alignment hole. This will ensure proper balance shaft to crankshaft timing after assembly (Fig. 156).

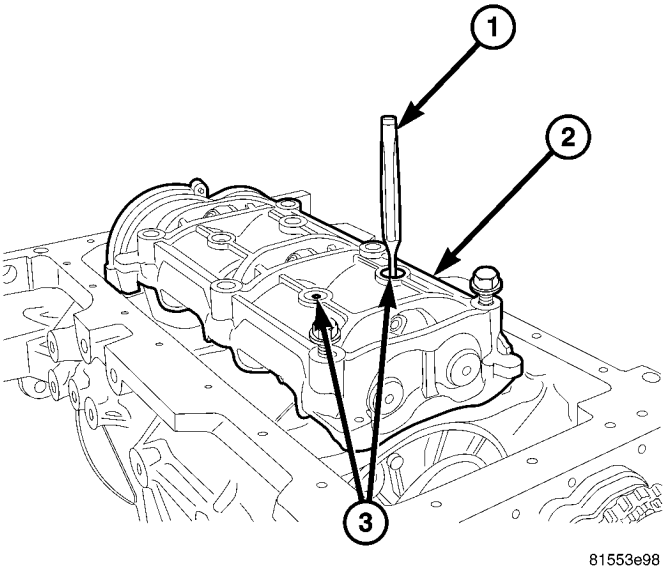

Fig. 156 BALANCE SHAFT ALIGNMENT

1 - PUNCH
2 - BALANCE SHAFT
3 - ALIGNMENT ACCESS HOLE(S)

(3) Install the new crankshaft carrier pin O-rings, balance shaft assembly and retaining bolts. Torque bolts to 32.4N·m (24 ft. lbs.), and remove the punch from the alignment hole.

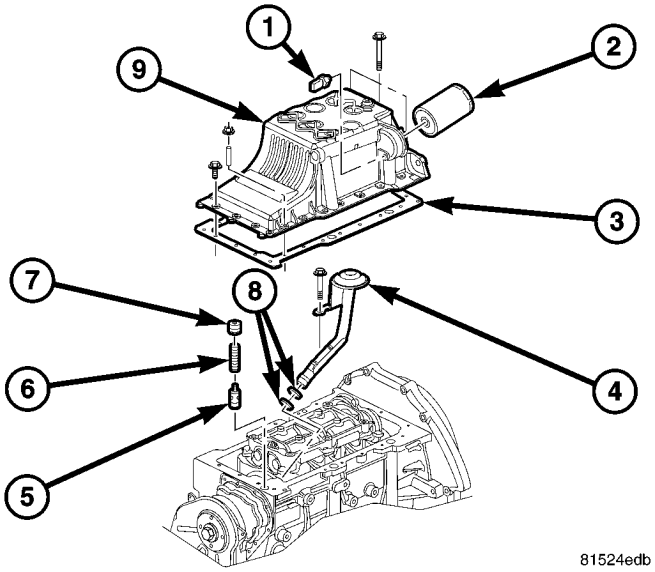

Fig. 157 OIL PAN

1 - OIL SENDING UNIT
2 - OIL FILTER
3 - GASKET
4 - OIL PUMP PICK UP TUBE
5 - OIL PRESSURE RELIEF VALVE PLUNGER
6 - OIL PRESSURE RELIEF VALVE SPRING
7 - OIL PRESSURE RELIEF VALVE CAP
8 - O RINGS
9 - OIL PAN

BALANCE SHAFT (Continued)

(4) Install oil pump pickup tube with new seals (Refer to 9 - ENGINE/LUBRICATION/OIL PUMP - INSTALLATION) (Fig. 157).

(5) Install oil pan (Refer to 9 - ENGINE/LUBRICATION/OIL PAN - INSTALLATION).

(6) Refill engine oil to proper level.

(7) Connect negative battery cable.

TIMING BELT / CHAIN COVER(S)

REMOVAL

REMOVAL - TIMING BELT INNER COVER

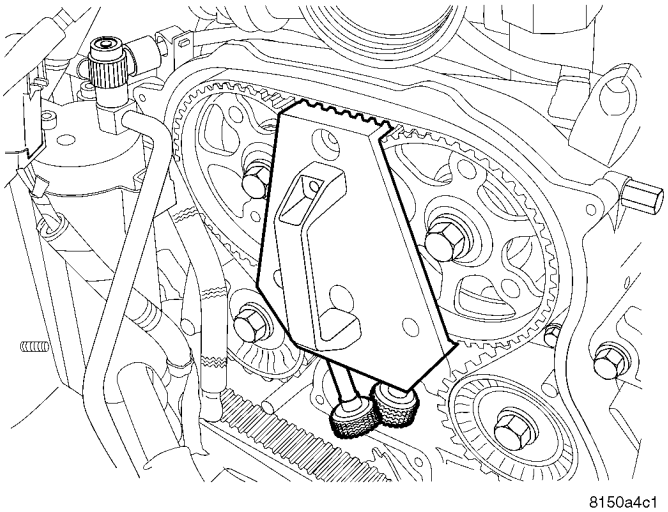

Fig. 158 VM.1085 CAMSHAFT LOCKING TOOL

(1) Disconnect negative battery cable.

(2) Remove engine cover (Refer to 9 - ENGINE COVER - REMOVAL).

(3) Remove cooling fan and fan drive viscous clutch assembly (Refer to 7 - COOLING/ENGINE/FAN DRIVE VISCOUS CLUTCH - REMOVAL).

(4) Remove accessory drive belt (Refer to 7 - COOLING/ACCESSORY DRIVE/DRIVE BELTS - REMOVAL).

(5) Remove cooling fan support (Refer to 7 - COOLING/ENGINE/RADIATOR FAN - REMOVAL).

(6) Remove vibration damper (Refer to 9 - ENGINE/ENGINE BLOCK/VIBRATION DAMPER - REMOVAL).

(7) Rotate the engine to 90 degrees ATDC (Refer to 9 - ENGINE/VALVE TIMING - STANDARD PROCEDURE).

(8) Remove timing belt outer cover (Refer to 9 - ENGINE/VALVE TIMING/TIMING BELT / CHAIN COVER(S) - REMOVAL).

(9) Remove timing belt (Refer to 9 - ENGINE/VALVE TIMING/TIMING BELT/CHAIN AND SPROCKETS - REMOVAL).

(10) Remove timing belt idler pulleys (Refer to 9 - ENGINE/VALVE TIMING/TIMING BELT IDLER PULLEY - REMOVAL).

(11) Using special tool VM.1085, remove camshaft sprockets (Fig. 158).

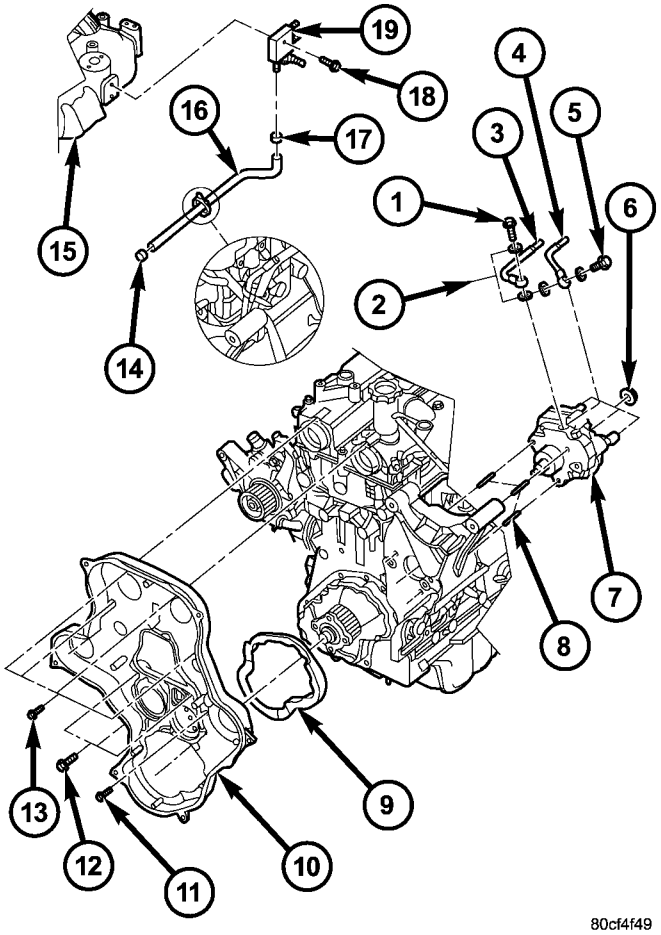

Fig. 159 TIMING BELT COVER - INNER

1 - BANJO FITTING
2 - BRASS WASHERS
3 - FUEL INLET LINE
4 - FUEL OUTLET LINE
5 - BANJO FITTING
6 - INJECTION PUMP RETAINING NUT
7 - INJECTION PUMP
8 - MOUNTING STUDS
9 - INNER TIMING COVER SEAL
10 - INNER TIMING COVER
11 - RETAINING BOLT
12 - RETAINING BOLT
13 - RETAINING BOLT
14 - HOSE CLAMP
15 - CYLINDER HEAD COVER/INTAKE MANIFOLD
16 - FUEL RETURN LINE TO INJECTION PUMP
17 - HOSE CLAMP
18 - FUEL RETURN JUNCTION BLOCK RETAINING BOLT
19 - FUEL RETURN JUNCTION BLOCK

TIMING BELT / CHAIN COVER(S) (Continued)

(12) Remove timing belt tensioner (Refer to 9 - ENGINE/VALVE TIMING/TMNG BELT/CHAIN TENSIONER&PULLEY - REMOVAL) .

(13) Remove timing belt inner cover retaining bolts and remove cover (Fig. 159).

REMOVAL - TIMING BELT OUTER COVER

(1) Disconnect negative battery cable.

(2) Remove engine cover (Refer to 9 - ENGINE COVER - REMOVAL).

(3) Remove cooling fan and fan drive viscous clutch assembly (Refer to 7 - COOLING/ENGINE/ FAN DRIVE VISCOUS CLUTCH - REMOVAL).

(4) Remove accessory drive belt (Refer to 7 - COOLING/ACCESSORY DRIVE/DRIVE BELTS - REMOVAL).

(5) Remove cooling fan support (Refer to 7 - COOLING/ENGINE/RADIATOR FAN - REMOVAL).

(6) Remove the power steering pump pulley.

(7) Remove vibration damper (Refer to 9 - ENGINE/ENGINE BLOCK/VIBRATION DAMPER - REMOVAL).

(8) Remove timing belt outer cover retaining bolts and remove cover (Fig. 160).

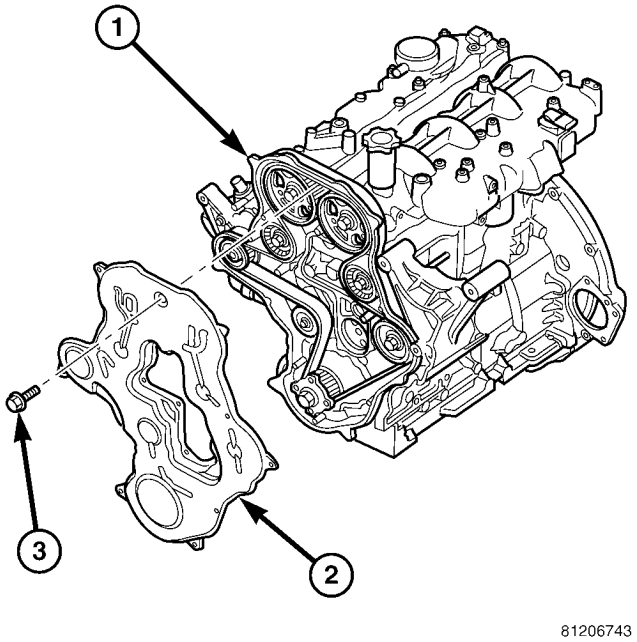

Fig. 160 TIMING BELT OUTER COVER

1 - TIMING BELT
2 - TIMING BELT OUTER COVER
3 - TIMING BELT OUTER COVER RETAINING BOLTS

INSTALLATION

INSTALLATION - TIMING BELT INNER COVER

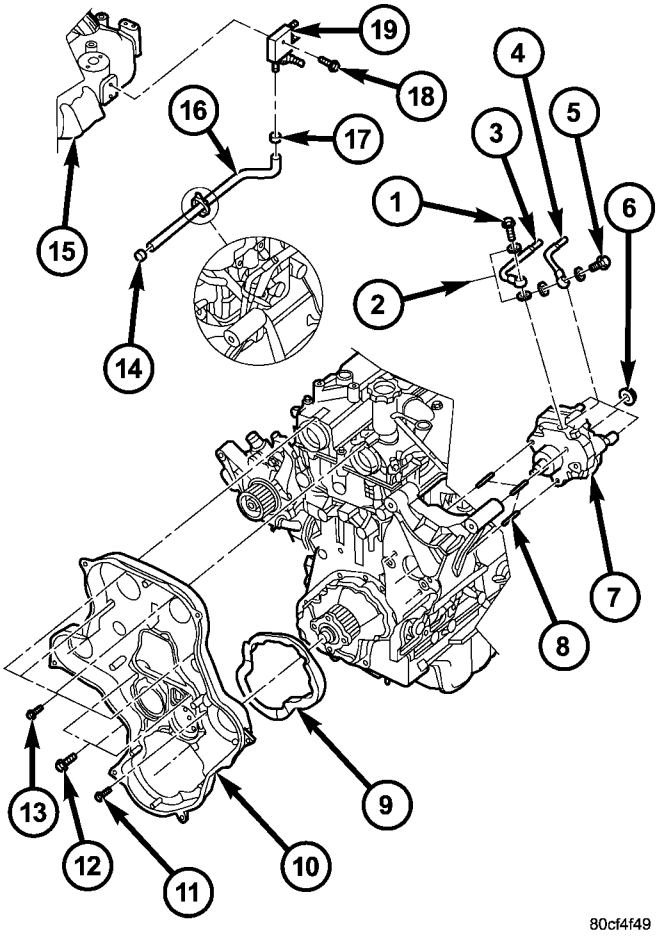

Fig. 161 TIMING BELT COVER - INNER

1 - BANJO FITTING
2 - BRASS WASHERS
3 - FUEL INLET LINE
4 - FUEL OUTLET LINE
5 - BANJO FITTING
6 - INJECTION PUMP RETAINING NUT
7 - INJECTION PUMP
8 - MOUNTING STUDS
9 - INNER TIMING COVER SEAL
10 - INNER TIMING COVER
11 - RETAINING BOLT
12 - RETAINING BOLT
13 - RETAINING BOLT
14 - HOSE CLAMP
15 - CYLINDER HEAD COVER/INTAKE MANIFOLD
16 - FUEL RETURN LINE TO INJECTION PUMP
17 - HOSE CLAMP
18 - FUEL RETURN JUNCTION BLOCK RETAINING BOLT
19 - FUEL RETURN JUNCTION BLOCK

NOTE: Rotate crankshaft hub to 90 degrees ATDC, or the three O'clock position (Refer to 9 - ENGINE/ VALVE TIMING - STANDARD PROCEDURE).

TIMING BELT / CHAIN COVER(S) (Continued)

(1) Install timing belt inner cover to engine front cover seal (Fig. 161).

(2) Install timing belt inner cover to cylinder head cover gaskets (Fig. 161).

(3) Install timing belt inner cover and retaining bolts. Torque 10mm bolts to 47.1N·m 935 ft. lbs.). and 8mm bolts to 10.8N·m. (96 in.lbs.). (Fig. 161)

(4) Install timing belt idler pulleys (Refer to 9 - ENGINE/VALVE TIMING/TIMING BELT IDLER PULLEY - INSTALLATION).

(5) Install camshaft sprockets. Hand tighten bolts.

(6) Install timing belt and tensioner (Refer to 9 - ENGINE/VALVE TIMING/TIMING BELT/CHAIN AND SPROCKETS - INSTALLATION) .

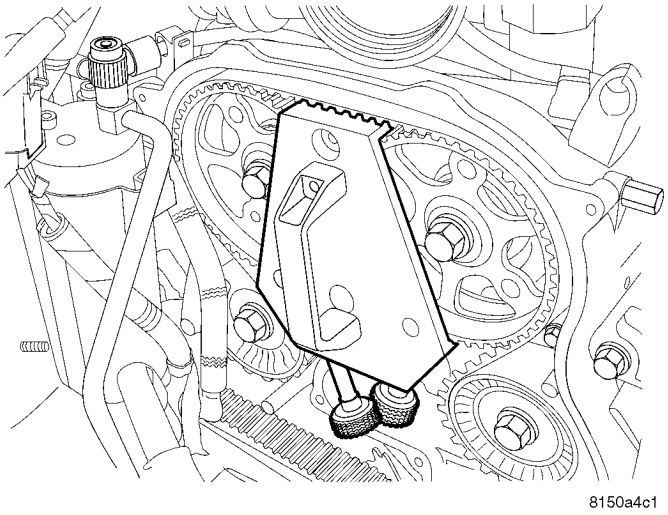

Fig. 162 VM.1085 CAMSHAFT LOCKING TOOL

(7) Install special tool VM.1085 between camshaft gears and tighten thumb screws to engage and retain the camshaft gears (Fig. 162).

(8) Tighten the camshaft gear bolts to 108 N·m (80 ft.lbs.) while holding the gears with special tool VM 1085 (Fig. 162).

(9) Install timing belt outer cover (Refer to 9 - ENGINE/VALVE TIMING/TIMING BELT / CHAIN COVER(S) - INSTALLATION).

(10) Install vibration damper (Refer to 9 - ENGINE/ENGINE BLOCK/VIBRATION DAMPER - INSTALLATION).

(11) Install cooling fan support (Refer to 7 - COOLING/ENGINE/RADIATOR FAN - INSTALLATION).

(12) Install accessory drive belt (Refer to 7 - COOLING/ACCESSORY DRIVE/DRIVE BELTS - INSTALLATION).

(13) Install cooling fan and fan drive viscous clutch assembly (Refer to 7 - COOLING/ENGINE/FAN DRIVE VISCOUS CLUTCH - INSTALLATION).

(14) Install engine cover (Refer to 9 - ENGINE COVER - INSTALLATION).

(15) Connect negative battery cable.

INSTALLATION - TIMING BELT OUTER COVER

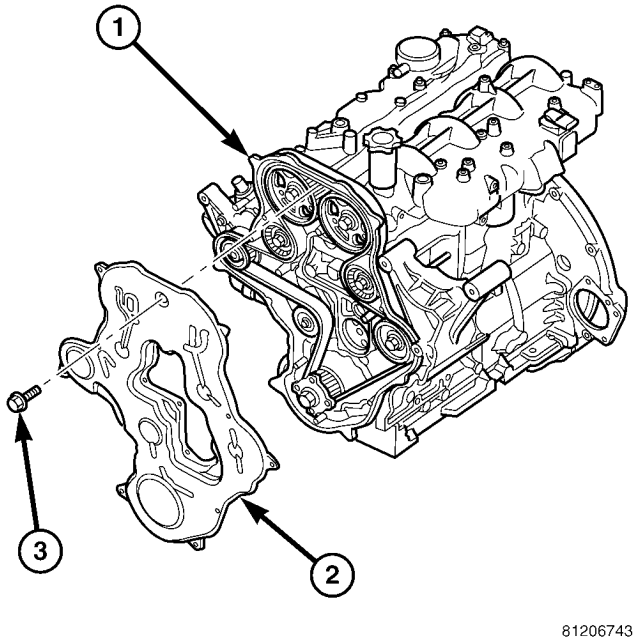

Fig. 163 TIMING BELT OUTER COVER

1 - TIMING BELT
2 - TIMING BELT OUTER COVER
3 - TIMING BELT OUTER COVER RETAINING BOLTS

(1) Install timing belt outer cover seal and cover. Torque 3mm bolts to 6 N·m (53 in. lbs.). (Fig. 163).

(2) Install vibration damper (Refer to 9 - ENGINE/ENGINE BLOCK/VIBRATION DAMPER - INSTALLATION).

(3) Install the power steering pump pulley.

(4) Install cooling fan support (Refer to 7 - COOLING/ENGINE/RADIATOR FAN - INSTALLATION).

(5) Install accessory drive belt (Refer to 7 - COOLING/ACCESSORY DRIVE/DRIVE BELTS - INSTALLATION).

(6) Install cooling fan and fan drive viscous clutch assembly (Refer to 7 - COOLING/ENGINE/FAN DRIVE VISCOUS CLUTCH - INSTALLATION).

(7) Install engine cover (Refer to 9 - ENGINE COVER - INSTALLATION).

(8) Connect negative battery cable.

TIMING BELT IDLER PULLEY

REMOVAL

CAUTION: Idler pulley retaining bolts are left hand thread.

(1) Disconnect negative battery cable.

TIMING BELT IDLER PULLEY (Continued)

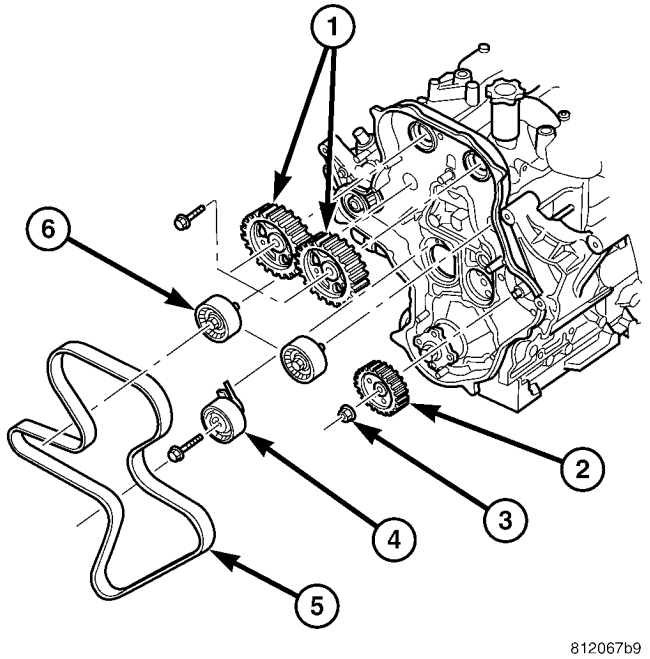

Fig. 164 TIMING BELT AND SPROCKETS

1 - CAMSHAFT SPROCKETS
2 - INJECTION PUMP SPROCKET
3 - INJECTION PUMP SPROCKET RETAINING NUT
4 - TIMING BELT TENSIONER
5 - TIMING BELT
6 - IDLER PULLEY

(2) Remove engine cover (Refer to 9 - ENGINE COVER - REMOVAL).

(3) Remove cooling fan and fan drive viscous clutch assembly (Refer to 7 - COOLING/ENGINE/FAN DRIVE VISCOUS CLUTCH - REMOVAL).

(4) Remove accessory drive belt (Refer to 7 - COOLING/ACCESSORY DRIVE/DRIVE BELTS - REMOVAL).

(5) Remove cooling fan support (Refer to 7 - COOLING/ENGINE/RADIATOR FAN - REMOVAL).

(6) Remove vibration damper (Refer to 9 - ENGINE/ENGINE BLOCK/VIBRATION DAMPER - REMOVAL).

(7) Rotate the engine to 90 degrees ATDC (Refer to 9 - ENGINE/VALVE TIMING - STANDARD PROCEDURE).

(8) Remove timing belt outer cover (Refer to 9 - ENGINE/VALVE TIMING/TIMING BELT / CHAIN COVER(S) - REMOVAL).

(9) Remove timing belt (Refer to 9 - ENGINE/VALVE TIMING/TIMING BELT/CHAIN AND SPROCKETS - REMOVAL).

NOTE: Idler pulley retaining bolts are left hand thread.

(10) Remove timing belt idler pulleys (Fig. 164).

INSTALLATION

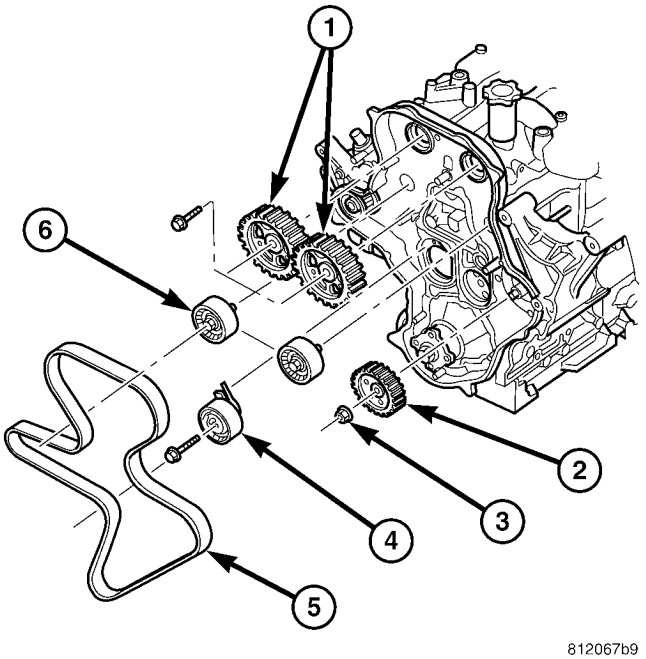

Fig. 165 TIMING BELT AND SPROCKETS

1 - CAMSHAFT SPROCKETS
2 - INJECTION PUMP SPROCKET
3 - INJECTION PUMP SPROCKET RETAINING NUT
4 - TIMING BELT TENSIONER
5 - TIMING BELT
6 - IDLER PULLEY

NOTE: Rotate the engine to 90 degrees ATDC (Refer to 9 - ENGINE/VALVE TIMING - STANDARD PROCEDURE). The idler pulley bolts are left hand thread.

(1) Install timing belt idler pulleys. Torque bolts to 47.1N·m. (Fig. 165).

(2) Install timing belt (Refer to 9 - ENGINE/VALVE TIMING/TIMING BELT/CHAIN AND SPROCKETS - INSTALLATION) .

(3) Install timing belt outer cover (Refer to 9 - ENGINE/VALVE TIMING/TIMING BELT / CHAIN COVER(S) - INSTALLATION).

(4) Install vibration damper (Refer to 9 - ENGINE/ENGINE BLOCK/VIBRATION DAMPER - INSTALLATION).

(5) Install cooling fan support (Refer to 7 - COOLING/ENGINE/RADIATOR FAN - INSTALLATION).

(6) Install accessory drive belt (Refer to 7 - COOLING/ACCESSORY DRIVE/DRIVE BELTS - INSTALLATION).

(7) Install cooling fan and fan drive viscous clutch assembly (Refer to 7 - COOLING/ENGINE/FAN DRIVE VISCOUS CLUTCH - INSTALLATION).

(8) Install engine cover (Refer to 9 - ENGINE COVER - INSTALLATION).

(9) Connect negative battery cable.

TIMING BELT/CHAIN AND SPROCKET(S)

REMOVAL

CAUTION: BEFORE REMOVING THE TIMING BELT, THE ENGINE MUST BE PLACED AT 90° AFTER TDC. FAILURE TO DO SO MAY RESULT IN VALVE AND/OR PISTON DAMAGE DURING ASSEMBLY. (Refer to 9 - ENGINE/VALVE TIMING - STANDARD PROCEDURE)

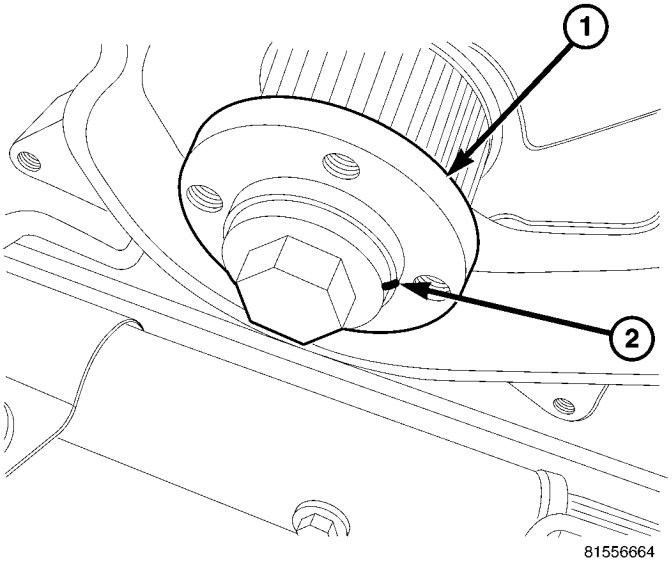

Fig. 166 FRONT CRANKSHAFT HUB

1 - FRONT CRANKSHAFT HUB
2 - WITNESS MARK

(1) Disconnect negative battery cable.

(2) Remove engine cover (Refer to 9 - ENGINE COVER - REMOVAL).

(3) Remove cooling fan and fan drive viscous clutch assembly (Refer to 7 - COOLING/ENGINE/ FAN DRIVE VISCOUS CLUTCH - REMOVAL).

(4) Remove accessory drive belt (Refer to 7 - COOLING/ACCESSORY DRIVE/DRIVE BELTS - REMOVAL).

(5) Remove cooling fan support (Refer to 7 - COOLING/ENGINE/RADIATOR FAN - REMOVAL).

(6) Remove vibration damper (Refer to 9 - ENGINE/ENGINE BLOCK/VIBRATION DAMPER - REMOVAL).

(7) Bring piston #1 to TDC, turn crankshaft until the witness line on the crankshaft hub is at the 12 o'clock position.

(8) Looking at the engine from the belt side, rotate the crankshaft 90° clockwise so the witness mark is now at the 3 O'clock position (Fig. 166).

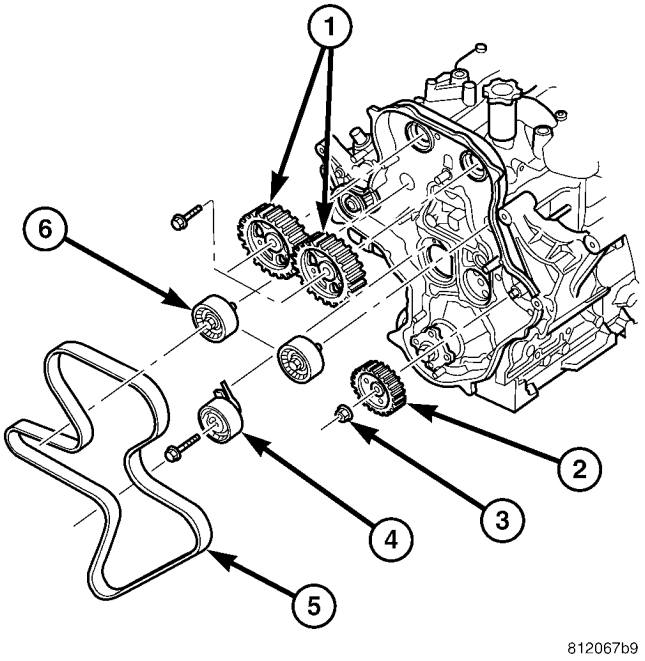

Fig. 167 TIMING BELT AND SPROCKETS

1 - CAMSHAFT SPROCKETS
2 - INJECTION PUMP SPROCKET
3 - INJECTION PUMP SPROCKET RETAINING NUT
4 - TIMING BELT TENSIONER
5 - TIMING BELT
6 - IDLER PULLEY

(9) Remove the alternator.

(10) Remove the intake and exhaust camshaft plugs from the camshaft cover, to introduce the camshaft timing pins VM.1052 Intake, and VM.1053 Exhaust (if the engine is timed correctly, the pins can be installed flush with the intake manifold/cylinder head cover). (Refer to 9 - ENGINE/VALVE TIMING - STANDARD PROCEDURE).

(11) Remove timing belt outer cover (Refer to 9 - ENGINE/VALVE TIMING/TIMING BELT / CHAIN COVER(S) - REMOVAL).

(12) Loosen timing belt tensioner and remove timing belt (Fig. 167).

(13) Remove the intake and exhaust camshaft alignment pins, VM.1052 Intake, and VM.1053 Exhaust.

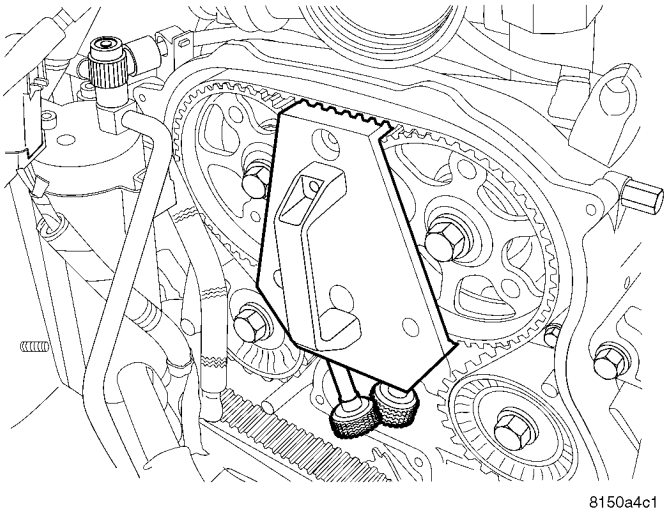

Fig. 168 VM.1085 CAMSHAFT LOCKING TOOL

(14) Loosen camshaft gears using special tool VM 1085 to retain the gears when loosening the bolts (Fig. 168).

(15) Remove special tool VM 1085.

INSTALLATION

NOTE: There are marks on both camshaft gears. These ARE NOT alignment marks and should be disregarded.

(1) With both camshaft alignment pins still installed and the engine rotated at 90° after TDC (Refer to 9 - ENGINE/VALVE TIMING - STANDARD PROCEDURE), verify that the camshaft gears are loose.

(2) Align the timing mark on the high pressure injection pump gear with the timing mark on the inner cover (Fig. 169)

NOTE: DO NOT remove the timing belt from the package until it's ready to be installed. DO NOT expose timing belt to oil, grease or water contamination. DO NOT crimp belt at a sharp angle. DO NOT clean belt, pulleys or tensioner with solvent. Check that pulleys and bearings are not seized or damage before installing belt.

(3) Install timing belt on crankshaft hub.

(4) Route the belt around high pressure injection pump, idler pulley, intake camshaft gear, exhaust camshaft gear, idler pulley, and water pump gear (Fig. 170).

(5) Adjust the timing belt tensioner (turn it clockwise) using special tool VM.9660, lining up the center notch with the aluminum cover dowel pin. Tighten the retaining bolt to 28N·m.(20 ft. lbs.). (Refer to 9 - ENGINE/VALVE TIMING/TMNG BELT/CHAIN TENSIONER&PULLEY - ADJUSTMENTS).

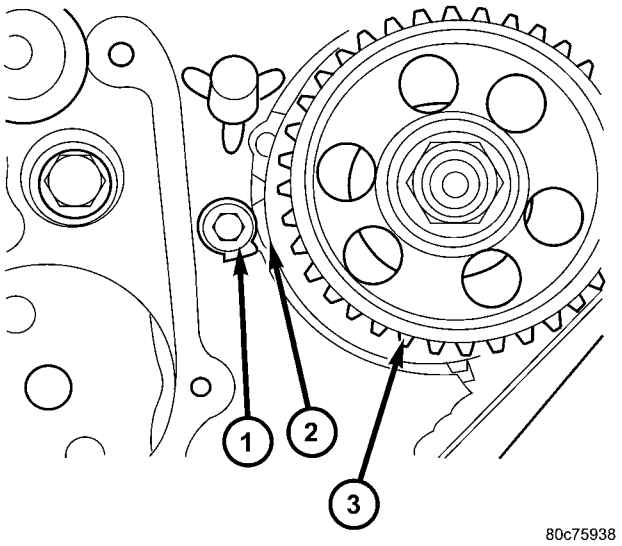

Fig. 169 INJECTION PUMP GEAR TIMING MARKS

1 - TIMING MARK ON COVER
2 - TIMING MARK ON INJECTION PUMP SPROCKET
3 - INJECTION PUMP SPROCKET

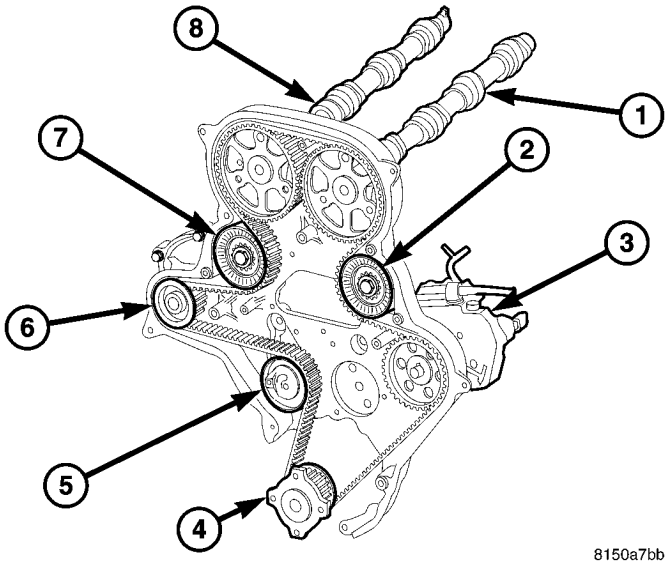

Fig. 170 TIMING BELT ROUTING

1 - INTAKE CAMSHAFT
2 - IDLER PULLEY
3 - HIGH PRESSURE PUMP
4 - CRANKSHAFT GEAR
5 - TIMING BELT TENSIONER
6 - WATER PUMP
7 - IDLER PULLEY
8 - EXHAUST CAMSHAFT

TIMING BELT/CHAIN AND SPROCKET(S) (Continued)

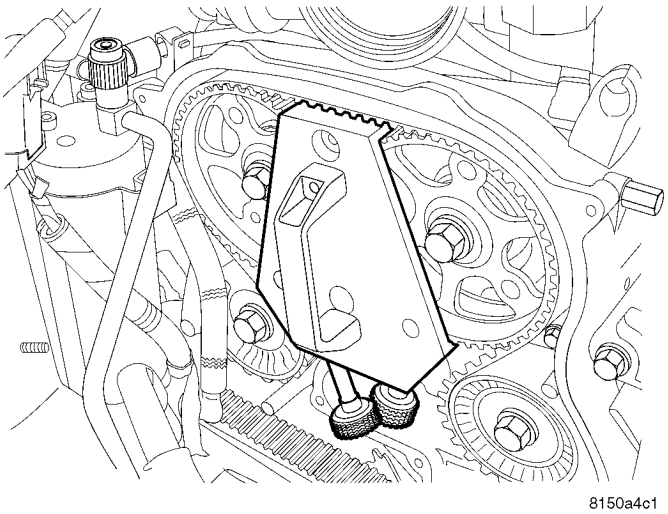

Fig. 171 VM.1085 CAMSHAFT LOCKING TOOL

(6) Install special tool VM.1085 between camshaft gears and tighten thumb screws to engage and retain the camshaft gears (Fig. 171).

(7) Tighten the camshaft gear bolts to 108 N·m (80 ft.lbs.) while holding the gears with special tool VM 1085.

(8) Remove camshaft gear locking tool.

(9) Remove intake and exhaust alignment pins.

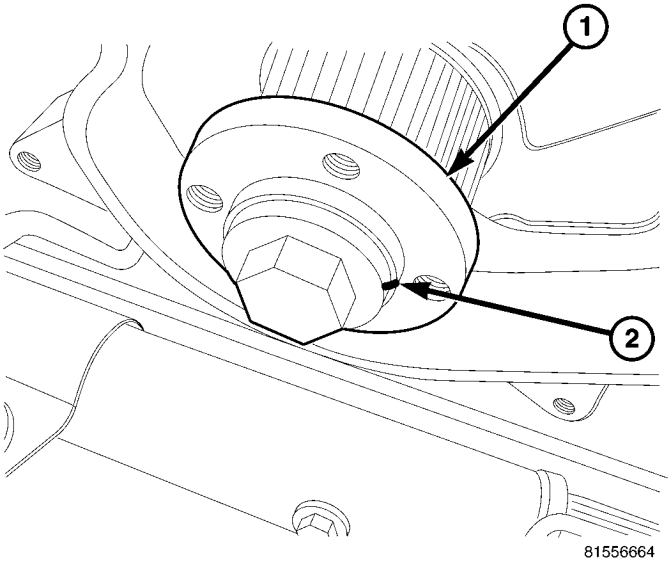

Fig. 172 FRONT CRANKSHAFT HUB

1 - FRONT CRANKSHAFT HUB
2 - WITNESS MARK

WARNING: IF INTAKE MANIFOLD/CYLINDER HEAD COVER WAS REMOVED WAIT 30 MINUTES BEFORE ROTATING CRANKSHAFT.

(10) Rotate the engine clockwise 2 revolutions (looking at engine from the belt side).

(11) With the crankshaft hub witness mark aligned to 90 degrees ATDC, or the three O'clock position (Fig. 172), check that the intake and exhaust camshaft alignment pins (VM 1052 and VM 1053) can be installed into the camshaft alignment access holes.

(12) Install timing belt outer cover (Refer to 9 - ENGINE/VALVE TIMING/TIMING BELT / CHAIN COVER(S) - INSTALLATION).

WARNING: IF THE CAMSHAFT ALIGNMENT PINS CAN NOT BE INSTALLED AT THIS TIME, REPEAT THE PROCEDURE FROM THE BEGINNING.

(13) Install the camshaft access plugs.

(14) Install vibration damper (Refer to 9 - ENGINE/ENGINE BLOCK/VIBRATION DAMPER - INSTALLATION).

(15) Install the alternator.

(16) Install cooling fan support (Refer to 7 - COOLING/ENGINE/RADIATOR FAN - INSTALLATION).

(17) Install accessory drive belt (Refer to 7 - COOLING/ACCESSORY DRIVE/DRIVE BELTS - INSTALLATION).

(18) Install cooling fan and fan drive viscous clutch assembly (Refer to 7 - COOLING/ENGINE/FAN DRIVE VISCOUS CLUTCH - INSTALLATION).

(19) Install engine cover (Refer to 9 - ENGINE COVER - INSTALLATION).

(20) Connect negative battery cable.

TIMING BELT/CHAIN TENSIONER & PULLEY

REMOVAL

NOTE: Before servicing the timing belt, the engine must be rotate to 90 degrees ATDC (Refer to 9 - ENGINE/VALVE TIMING - STANDARD PROCEDURE).

(1) Disconnect negative battery cable.

(2) Remove engine cover (Refer to 9 - ENGINE COVER - REMOVAL).

(3) Remove cooling fan and fan drive viscous clutch assembly (Refer to 7 - COOLING/ENGINE/FAN DRIVE VISCOUS CLUTCH - REMOVAL).

(4) Remove accessory drive belt (Refer to 7 - COOLING/ACCESSORY DRIVE/DRIVE BELTS - REMOVAL).

(5) Remove cooling fan support (Refer to 7 - COOLING/ENGINE/RADIATOR FAN - REMOVAL).

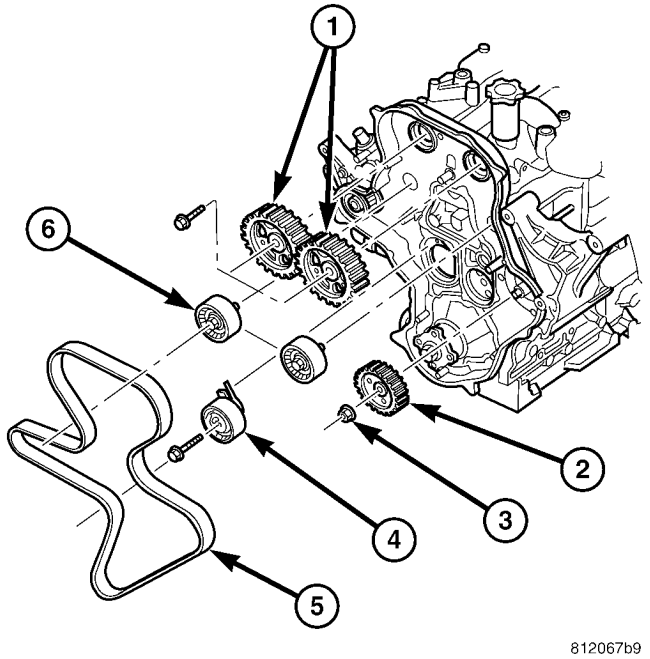

Fig. 173 TIMING BELT AND SPROCKETS

1 - CAMSHAFT SPROCKETS
2 - INJECTION PUMP SPROCKET
3 - INJECTION PUMP SPROCKET RETAINING NUT
4 - TIMING BELT TENSIONER
5 - TIMING BELT
6 - IDLER PULLEY

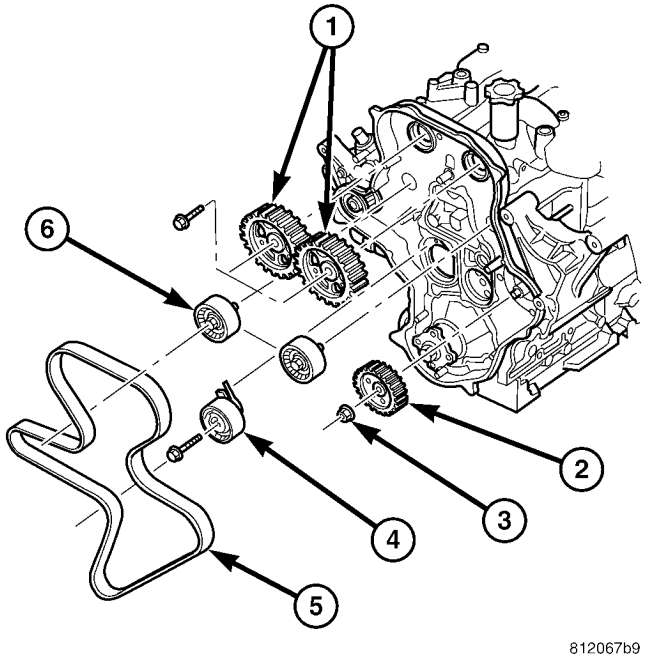

Fig. 174 TIMING BELT AND SPROCKETS

1 - CAMSHAFT SPROCKETS
2 - INJECTION PUMP SPROCKET
3 - INJECTION PUMP SPROCKET RETAINING NUT
4 - TIMING BELT TENSIONER
5 - TIMING BELT
6 - IDLER PULLEY

(6) Remove vibration damper (Refer to 9 - ENGINE/ENGINE BLOCK/VIBRATION DAMPER - REMOVAL).

(7) Remove the power steering pump pulley.

(8) Remove timing belt outer cover (Refer to 9 - ENGINE/VALVE TIMING/TIMING BELT / CHAIN COVER(S) - REMOVAL).

(9) Loosen and remove timing belt tensioner (Fig. 173).

INSTALLATION

NOTE: DO NOT remove the timing belt from the package until it's ready to be installed. DO NOT expose timing belt to oil, grease or water contamination. DO NOT crimp belt at a sharp angle. DO NOT clean belt, pulleys or tensioner with solvent. Check that pulleys and bearings are not seized or damage before installing belt.

(1) Install timing belt tensioner and retaining bolt (Fig. 174).

(2) Adjust timing belt tensioner (Refer to 9 - ENGINE/VALVE TIMING/TMNG BELT/CHAIN TENSIONER&PULLEY - ADJUSTMENTS) .

(3) Install timing belt outer cover (Refer to 9 - ENGINE/VALVE TIMING/TIMING BELT / CHAIN COVER(S) - INSTALLATION).

(4) Install vibration damper (Refer to 9 - ENGINE/ ENGINE BLOCK/VIBRATION DAMPER - INSTALLATION).

(5) Install the power steering pump pulley.

(6) Install cooling fan support (Refer to 7 - COOLING/ENGINE/RADIATOR FAN - INSTALLATION).

(7) Install accessory drive belt (Refer to 7 - COOLING/ACCESSORY DRIVE/DRIVE BELTS - INSTALLATION).

(8) Install cooling fan and fan drive viscous clutch assembly (Refer to 7 - COOLING/ENGINE/FAN DRIVE VISCOUS CLUTCH - INSTALLATION).

(9) Install engine cover (Refer to 9 - ENGINE COVER - INSTALLATION).

(10) Connect negative battery cable.

TIMING BELT/CHAIN TENSIONER & PULLEY (Continued)

ADJUSTMENTS

ADJUSTMENT - TIMING BELT TENSIONER

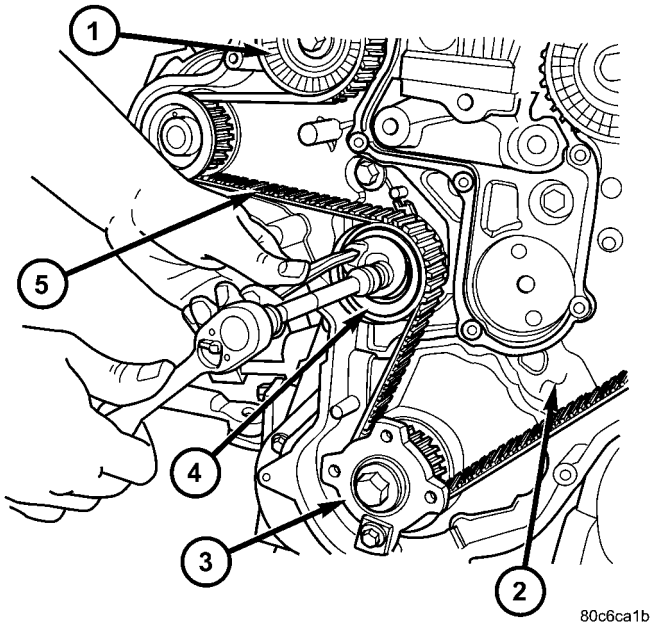

Fig. 175 TIMING BELT TENSIONER ADJUSTMENT

1 - TIMING BELT IDLER PULLEY
2 - ENGINE FRONT COVER
3 - CRANKSHAFT HUB
4 - TIMING BELT TENSIONER
5 - TIMING BELT

(1) With timing belt outer cover removed and timing belt installed.

(2) Loosen timing belt tensioner (Fig. 175).

(3) Align timing belt tensioner using special tool 9660, with the alignment pointer as shown and torque timing belt tensioner retaining bolt to 34.7N·m.(26 ft. lbs.). (Fig. 176).

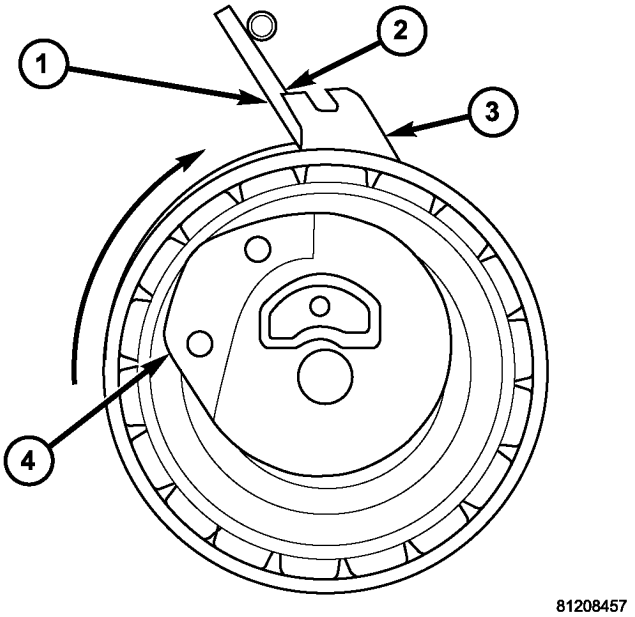

Fig. 176 TIMING BELT TENSIONER ALIGNMENT

1 - TENSIONER SPRING
2 - 1MM ALIGNMENT POINTER OVERLAP
3 - TENSIONER ALIGNMENT POINTER
4 - TENSIONER ASSEMBLY

(4) Rotate engine 2 complete revolution and then recheck tensioner alignment. Readjust tensioner alignment as necessary.

EXHAUST SYSTEM

TABLE OF CONTENTS

	page
EXHAUST SYSTEM AND TURBOCHARGER	
DESCRIPTION	
GAS ENGINES	1
2.8L DIESEL	2
DIAGNOSIS AND TESTING	
DIAGNOSIS AND TESTING - EXHAUST SYSTEM	3
DIESEL ENGINE	4
SPECIFICATIONS	
TORQUE	4
CATALYTIC CONVERTER	
DESCRIPTION - CATALYTIC CONVERTER	5
REMOVAL	
2.4L ENGINE	5
3.7L ENGINE	5
2.8L DIESEL ENGINE	6
INSPECTION	6
INSTALLATION	
2.4L ENGINE	6
3.7L ENGINE	7
2.8L DIESEL	7
MUFFLER	
REMOVAL	8
INSTALLATION	8
HEAT SHIELDS	
DESCRIPTION	9
TURBOCHARGER SYSTEM	
DIAGNOSIS AND TESTING	
TURBOCHARGER BOOST PRESSURE	9
CHARGE AIR COOLER AND PLUMBING	
DIAGNOSIS AND TESTING	
CHARGE AIR COOLER SYSTEM - LEAKS	9
REMOVAL	
REMOVAL - CAC INLET HOSE	10
REMOVAL - CAC OUTLET HOSE	10
INSTALLATION	
INSTALLATION - CAC INLET HOSE	10
INSTALLATION - CAC OUTLET HOSE	10
TURBOCHARGER	
DESCRIPTION	11
OPERATION	11
REMOVAL	13
CLEANING	14
INSTALLATION	14

EXHAUST SYSTEM AND TURBOCHARGER

DESCRIPTION

GAS ENGINES

The basic exhaust system consists of a exhaust pipe assembly with catalytic converters, muffler and tailpipe assembly and heat shields. (Fig. 1)

The exhaust system must be properly aligned to prevent stress, leakage and body contact. Minimum clearance between any exhaust component and the body or frame is 25.4 mm (1.0 in.). If the system contacts any body panel, it may amplify objectionable noises from the engine or body.

When inspecting an exhaust system, critically inspect for cracked or loose joints, stripped screw or bolt threads, corrosion damage and worn, cracked or broken hangers. Replace all components that are badly corroded or damaged. DO NOT attempt to repair.

When replacement is required, use original equipment parts (or equivalent). This will assure proper alignment and provide acceptable exhaust noise levels.

CAUTION: Avoid application of rust prevention compounds or undercoating materials to exhaust system floor pan exhaust heat shields. Light overspray near the edges is permitted. Application of coating will result in excessive floor pan temperatures and objectionable fumes.

EXHAUST SYSTEM AND TURBOCHARGER (Continued)

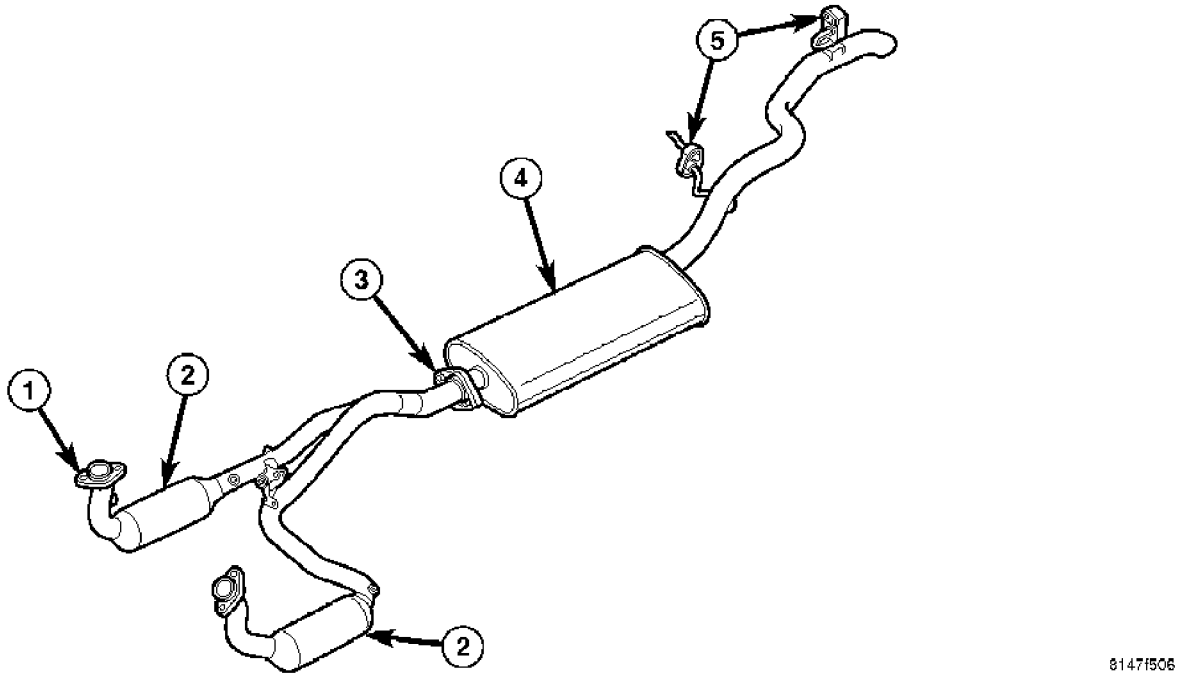

Fig. 1 EXHAUST SYSTEM - TYPICAL - GAS ENGINES

1 - EXHAUST FLANGE
2 - CATALYTIC CONVERTER
3 - FRONT EXHAUST PIPE ASSY-TO-MUFFLER FLANGE
4 - MUFFLER
5 - INSOLATOR

2.8L DIESEL

CAUTION: Avoid application of rust prevention compounds or undercoating materials to exhaust system floor pan exhaust heat shields. Light overspray near the edges is permitted. Application of coating will result in excessive floor pan temperatures and objectionable fumes.

The diesel engine exhaust system consists of an engine exhaust manifold, turbocharger, front exhaust pipe with catalytic converter, muffler and tailpipe assembly.

The exhaust system must be properly aligned to prevent stress, leakage and body contact. The exhaust components should be kept a minimum of 25.4 mm (1.0 in.) away from the body and frame. If the system contacts any body panel, it may amplify objectionable noises from the engine or body.

EXHAUST SYSTEM AND TURBOCHARGER (Continued)

DIAGNOSIS AND TESTING

DIAGNOSIS AND TESTING - EXHAUST SYSTEM

EXHAUST SYSTEM DIAGNOSIS CHART

CONDITION	POSSIBLE CAUSE	CORRECTION
EXCESSIVE EXHAUST NOISE OR LEAKING EXHAUST GASES	1. Leaks at pipe joints.	1. Tighten clamps/bolts to specified torque at leaking joints.
	2. Rusted or blown out muffler.	2. Replace muffler. Inspect exhaust system.
	3. Broken or rusted out exhaust pipe.	3. Replace exhaust pipe.
	4. Exhaust pipe leaking at manifold flange.	4. Tighten/replace flange attaching nuts/bolts.
	5. Exhaust manifold cracked or broken.	5. Replace exhaust manifold.
	6. Leak between exhaust manifold and cylinder head.	6. Tighten exhaust manifold to cylinder head bolts.
	7. Catalytic converter rusted or blown out.	7. Replace catalytic converter assy.
	8. Restriction in exhaust system.	8. Remove restriction, if possible. Replace restricted part if necessary.
CAUTION: When servicing and replacing exhaust system components, disconnect the oxygen sensor connector(s). Allowing the exhaust to hang by the oxygen sensor wires will damage the harness and/or sensor.		

EXHAUST SYSTEM AND TURBOCHARGER (Continued)

DIESEL ENGINE

EXHAUST SYSTEM DIAGNOSIS CHART

CONDITION	POSSIBLE CAUSE	CORRECTION
EXCESSIVE EXHAUST NOISE OR LEAKING EXHAUST GASES	1. Leaks at pipe joints.	1. Tighten clamps/bolts at leaking joints.
	2. Rusted or blown out muffler.	2. Replace muffler. Inspect exhaust system.
	3. Broken or rusted out exhaust pipe.	3. Replace exhaust pipe.
	4. Exhaust pipe leaking at manifold flange.	4. Tighten/replace flange attaching nuts/bolts.
	5. Exhaust manifold cracked or broken.	5. Replace exhaust manifold.
	6. Leak between exhaust manifold and cylinder head.	6. Tighten exhaust manifold to cylinder head bolts. Replace gasket if necessary.
	7. Turbocharger mounting flange cracked.	7. Remove turbocharger and inspect. (Refer to 11 - EXHAUST SYSTEM/TURBOCHARGER SYSTEM/TURBOCHARGER - REMOVAL).
	8. Restriction in exhaust system.	8. Remove restriction, if possible. Replace restricted part if necessary.

SPECIFICATIONS

TORQUE

DESCRIPTION	N·m	Ft. Lbs.	In. Lbs.
Front Exhaust Pipe Flange-to-Exhaust Manifold Bolts	36	28	-
Front Exhaust pipe-to-Muffler Flange Nuts	36	28	-
Turbocharger Bracket Bolts	47.1	35	-
Turbocharger Downpipe Nuts	32.4	24	-
Turbocharger Oil Supply Line Fitting	24.5	18	215
Turbocharger Oil Return Line bolts	10.8	-	96
Turbocharger to Exhaust Manifold Nuts	32.4	24	-

CATALYTIC CONVERTER

DESCRIPTION - CATALYTIC CONVERTER

WARNING: THE NORMAL OPERATING TEMPERATURE OF THE EXHAUST SYSTEM IS VERY HIGH. THEREFORE, NEVER WORK AROUND OR ATTEMPT TO SERVICE ANY PART OF THE EXHAUST SYSTEM UNTIL IT IS COOLED. SPECIAL CARE SHOULD BE TAKEN WHEN WORKING NEAR THE CATALYTIC CONVERTER. THE TEMPERATURE OF THE CONVERTER RISES TO A HIGH LEVEL AFTER A SHORT PERIOD OF ENGINE OPERATION TIME.

CAUTION: DO NOT remove spark plug wires from plugs or by any other means short out cylinders. Failure of the catalytic converter can occur due to a temperature increase caused by unburned fuel passing through the converter.

The stainless steel catalytic converter body is designed to last the life of the vehicle. Excessive heat can result in bulging or other distortion, but excessive heat will not be the fault of the converter. If unburned fuel enters the converter, overheating may occur. If a converter is heat-damaged, correct the cause of the damage at the same time the converter is replaced. Also, inspect all other components of the exhaust system for heat damage.

Unleaded gasoline must be used to avoid contaminating the catalyst core.

50 State emission vehicles incorporate two catalytic converters located after the exhaust manifolds and before the muffler.

REMOVAL

2.4L ENGINE

WARNING: IF TORCHES ARE USED WHEN WORKING ON THE EXHAUST SYSTEM, DO NOT ALLOW THE FLAME NEAR THE FUEL LINES.

(1) Raise and support the vehicle.

(2) Saturate the bolts and nuts with heat valve lubricant. Allow 5 minutes for penetration.

(3) Disconnect oxygen sensor electrical connector.

(4) Remove the bolts from the front exhaust pipe/catalytic converter assembly to muffler flange. (Fig. 2)

(5) Remove bolts and flanged nuts at the manifold.

(6) Lower the catalyst assembly and slide out of the mount at the transmission (if equipped).

(7) Remove the front exhaust pipe/catalytic converter assembly from the vehicle.

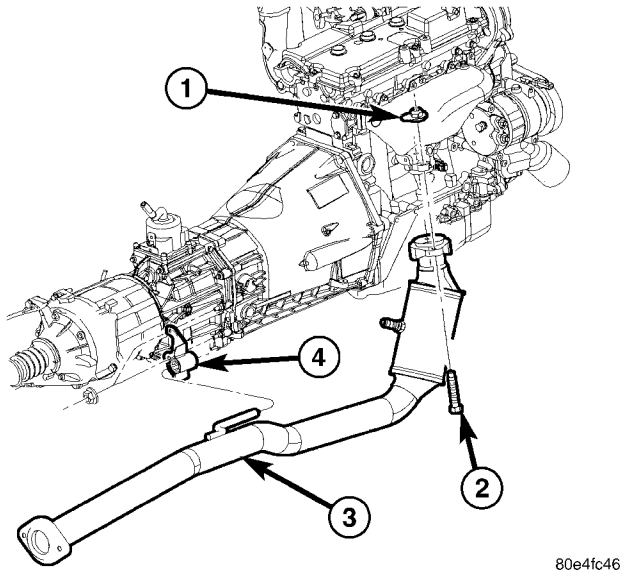

Fig. 2 2.4L CATALYST ASSEMBLY - 4x4

1- FLANGED NUT
2- CATALYST ASSEMBLY
3- BOLT
4- HANGER

3.7L ENGINE

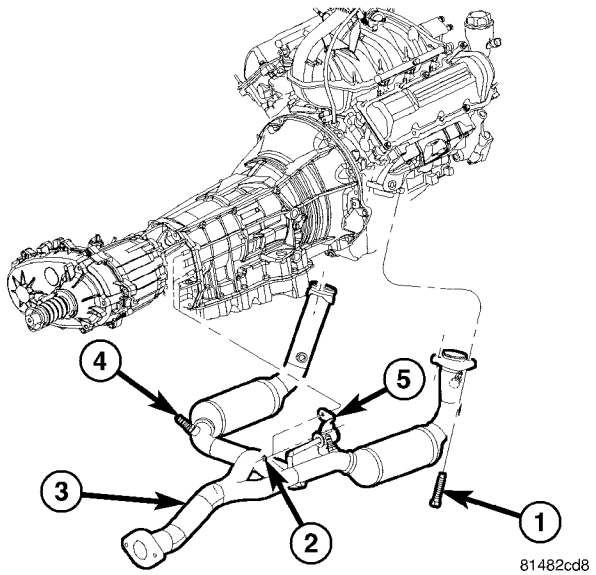

Fig. 3 3.7L CATALYTIC CONVERTER - TYPICAL

1 - BOLT
2 - NUT
3 - FRONT EXHAUST PIPE AND CATALYTIC CONVERTER ASSEMBLY
4 - OXYGEN SENSOR
5 - INSOLATOR BRACKET

WARNING: IF TORCHES ARE USED WHEN WORKING ON THE EXHAUST SYSTEM, DO NOT ALLOW THE FLAME NEAR THE FUEL LINES.

(1) Raise and support the vehicle.

CATALYTIC CONVERTER (Continued)

(2) Saturate the bolts and nuts with heat valve lubricant. Allow 5 minutes for penetration.

(3) Disconnect oxygen sensor electrical connectors. (Fig. 3)

(4) Remove the nuts from the front exhaust pipe and catalytic converter assembly to muffler flange.

(5) Remove bolts and flanged nuts at the manifold.

(6) Lower the front exhaust pipe/catalytic converter assembly and slide out of the mount at the transmission (if equipped).

(7) Remove the front exhaust pipe/catalytic converter assembly from the vehicle.

2.8L DIESEL ENGINE

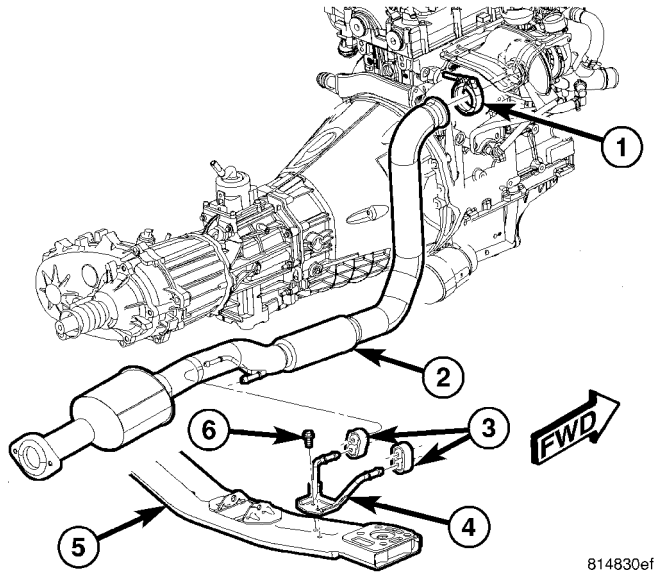

Fig. 4 2.8L DIESEL CATALYTIC CONVERTER - TYPICAL

1 - BAND CLAMP
2 - FRONT EXHAUST PIPE AND CATALYTIC CONVERTER ASSEMBLY
3 - INSOLATOR
4 - INSOLATOR BRACKET
5 - CROSMEMBER
6 - BOLT

WARNING: IF TORCHES ARE USED WHEN WORKING ON THE EXHAUST SYSTEM, DO NOT ALLOW THE FLAME NEAR THE FUEL LINES.

(1) Raise and support the vehicle.

(2) Saturate the bolts and nuts with heat valve lubricant. Allow 5 minutes for penetration.

(3) Disconnect oxygen sensor wiring.

(4) Remove the nuts from the front exhaust pipe and catalytic converter to muffler flange. (Fig. 4)

NOTE: The front exhaust pipe and catalytic converter to turbocharger clamp is not reusable. Always use a new clamp when reinstalling the catalytic converter.

(5) Remove the nut from the front exhaust pipe and catalytic converter to turbocharger clamp. Spread the clamp.

(6) Lower the catalyst assembly and slide out of the mount at the transmission (if equipped).

(7) Remove the front exhaust pipe/catalytic converter assembly from the vehicle.

(8) Discard the front exhaust pipe and catalytic converter to turbocharger clamp. Discard clamp.

INSPECTION

Look at the stainless steel body of the converter, inspect for bulging or other distortion that could be a result of overheating. If the converter has a heat shield attached make sure it is not bent or loose.

If you suspect internal damage to the catalyst, tapping the bottom of the catalyst with a rubber mallet may indicate a damaged core.

INSTALLATION

2.4L ENGINE

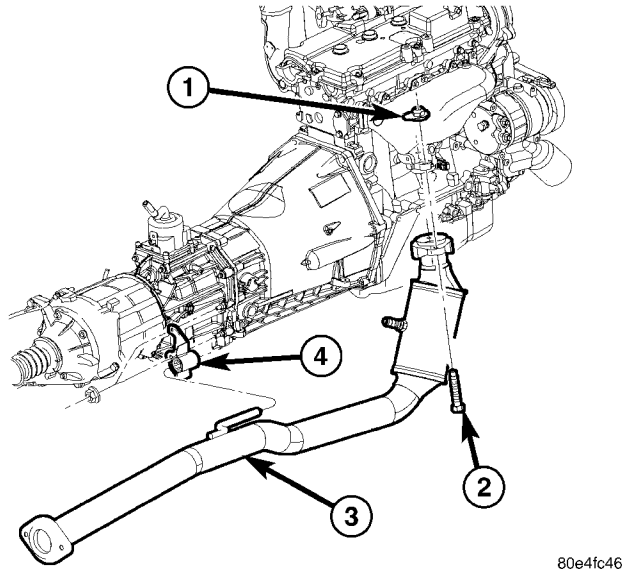

Fig. 5 2.4L CATALYST ASSEMBLY - 4x4

1- FLANGED NUT
2- CATALYST ASSEMBLY
3- BOLT
4- HANGER

(1) Position the front exhaust pipe and catalytic converter assembly into the the mount at the transmission (if equipped) and onto the exhaust manifold flange connection.

(2) Install the bolts at the muffler and front pipe connection. Do not tighten.

(3) Position the exhaust pipe for proper clearance with the frame and underbody parts. A minimum clearance of 25.4 mm (1.0 in.) is required.

CATALYTIC CONVERTER (Continued)

(4) Tighten the bolt at exhaust manifold to 27 N·m (19 in. lbs.) torque. (Fig. 5)

(5) Tighten the front exhaust pipe and catalytic converter assembly to muffler flange nuts to 27 N·m (19 ft. lbs.) torque.

(6) Connect oxygen sensor electrical connector.

(7) Lower the vehicle.

(8) Start the vehicle and inspect for exhaust leaks. Repair exhaust leaks as necessary.

(9) Check the exhaust system for contact with the body panels. Make necessary adjustments, if necessary.

3.7L ENGINE

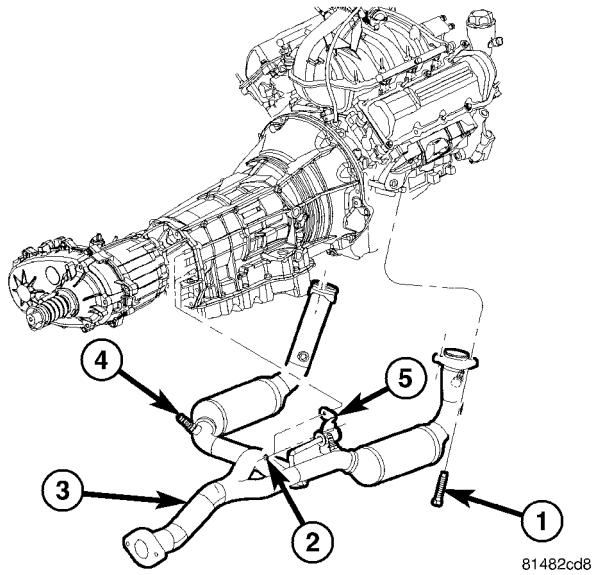

Fig. 6 3.7L CATALYTIC CONVERTER - TYPICAL

1 - BOLT
2 - NUT
3 - FRONT EXHAUST PIPE AND CATALYTIC CONVERTER ASSEMBLY
4 - OXYGEN SENSOR
5 - INSOLATOR BRACKET

(1) Position the front exhaust pipe and catalytic converter assembly into the mount at the transmission (if equipped) and onto the exhaust manifold flange connection.

(2) Install the nuts at the front exhaust pipe and catalytic converter assembly to muffler flange. Do not tighten.

(3) Position the exhaust pipe for proper clearance with the frame and underbody parts. A minimum clearance of 25.4 mm (1.0 in.) is required.

(4) Tighten the bolt at exhaust manifold to 27 N·m (19 in. lbs.) torque. (Fig. 6)

(5) Tighten the front exhaust pipe and catalytic converter assembly to muffler flange nuts to 27 N·m (19 ft. lbs.) torque.

(6) Position the front pipe onto the exhaust manifold flange connection. Tighten the clamp to 10 N·m (95 in. lbs.) torque.

(7) Connect oxygen sensor electrical connectors.

(8) Lower the vehicle.

(9) Start the vehicle and inspect for exhaust leaks. Repair exhaust leaks as necessary.

(10) Check the exhaust system for contact with the body panels. Make necessary adjustments, if necessary.

2.8L DIESEL

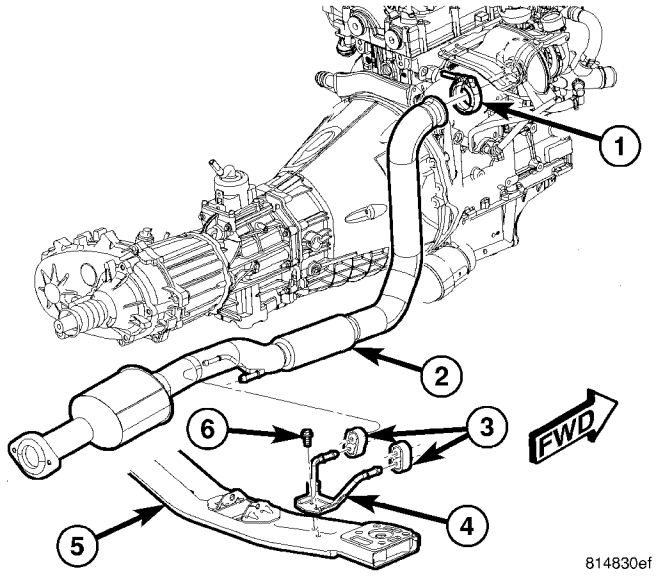

Fig. 7 2.8L DIESEL CATALYTIC CONVERTER - TYPICAL

1 - BAND CLAMP
2 - FRONT EXHAUST PIPE AND CATALYTIC CONVERTER ASSEMBLY
3 - INSOLATOR
4 - INSOLATOR BRACKET
5 - CROSMEMBER
6 - BOLT

(1) Position new turbocharger to front exhaust pipe and catalytic converter clamp on turbocharger.

(2) Position the front exhaust pipe and catalytic converter assembly into the mount at the transmission (if equipped) and onto the turbocharger. (Fig. 7)

(3) Install the nuts at the front exhaust pipe and catalytic converter assembly to muffler flange. Do not tighten.

(4) Position the exhaust pipe for proper clearance with the frame and underbody parts. A minimum clearance of 25.4 mm (1.0 in.) is required.

(5) Tighten turbocharger to front exhaust pipe and catalytic converter assembly clamp nut to 27 N·m (19 ft. lbs.) torque.

(6) Install the bolts at the front exhaust pipe and catalytic converter assembly to muffler flange.. Tighten the nuts to 27 N·m (19 ft. lbs.) torque.

CATALYTIC CONVERTER (Continued)

(7) Connect oxygen sensor electrical connectors.
(8) Lower the vehicle.
(9) Start the vehicle and inspect for exhaust leaks. Repair exhaust leaks as necessary.
(10) Check the exhaust system for contact with the body panels. Make necessary adjustments, if necessary.

MUFFLER

REMOVAL

(1) Raise vehicle on hoist.
(2) Remove exhaust pipe to muffler and tailpipe assembly retaining nuts (Fig. 8).
(3) Using a suitable pry bar, pry muffler and tailpipe assembly out of exhaust hanger (Fig. 8).
(4) Remove muffler and tailpipe assembly from vehicle.

INSTALLATION

(1) Install muffler and tailpipe assembly in vehicle and attach to exhaust hangers (Fig. 8).
(2) Install muffler and tailpipe assembly to exhaust pipe retaining nuts. Torque nuts to 32.4N·m.
(3) Lower vehicle from hoist.

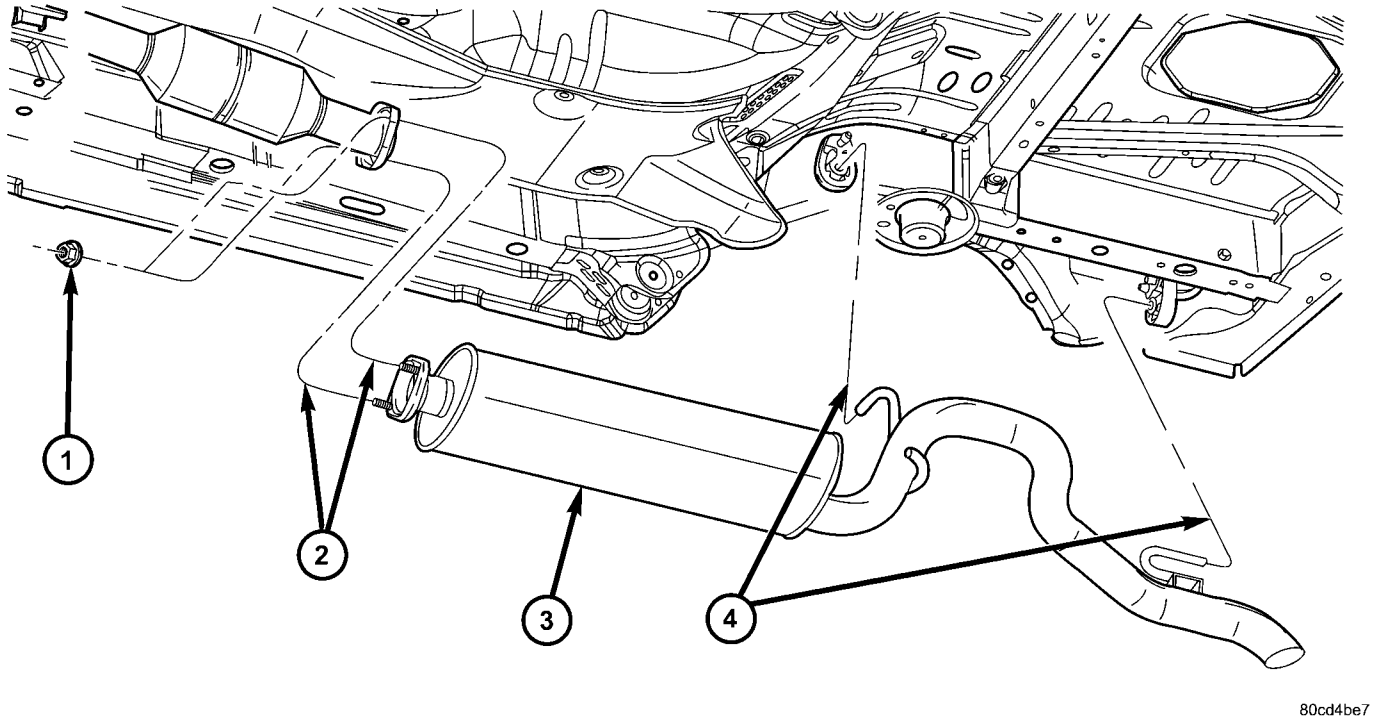

Fig. 8 MUFFLER AND TAILPIPE ASSEMBLY

1 - RETAINING NUT
2 - ATTACHING STUD LOCATION
3 - MUFFLER AND TAILPIPE ASSEMBLY
4 - MUFFLER AND TAILPIPE HANGER LOCATIONS

HEAT SHIELDS

DESCRIPTION

Heat shields are needed to protect both the vehicle and the environment from the high temperatures developed by the catalytic converter. The catalytic converter releases additional heat into the exhaust system. Under severe operating conditions, the temperature increases in the area of the converter. Such conditions can exist when the engine misfires or otherwise does not operate at peak efficiency (Fig. 9).

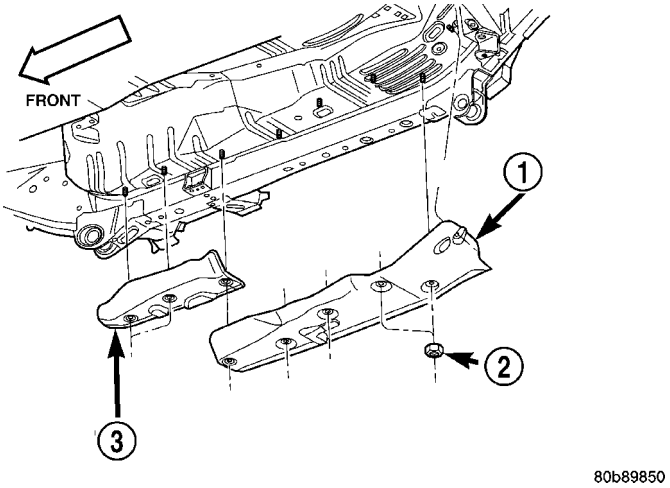

Fig. 9 Front and Rear Floor Pan Heat Shields Typical

1 - REAR FLOOR PAN HEAT SHIELD
2 - HEAT SHIELD RETAINING NUTS
3 - FRONT FLOOR PAN HEAT SHIELD

TURBOCHARGER SYSTEM

DIAGNOSIS AND TESTING

TURBOCHARGER BOOST PRESSURE

Low turbocharger boost pressure can cause poor engine performance and driveability concerns. The following procedure will test the turbocharger boost pressure.

Causes of low boost pressure include the following:

- Restricted air inlet system
- Leak in charge air cooler system
- Restricted/high pressure drop across charge air cooler
- Damaged turbocharger compressor wheel housing
- Turbocharger wastegate stuck open
- Excessive exhaust restriction

Causes of excessively high boost pressure include:

- Turbocharger wastegate stuck closed
- Turbocharger wastegate signal line leaking or damaged
- Damaged wastegate command valve O-rings
- Wastegate command valve mechanically stuck in actuated position

Several Diagnostic Trouble Codes (DTCs) can be set that will indicate high or low system boost levels. There is a DTC for circuit faults relating to the electronically controlled wastegate command valve.

(Refer to 11 - EXHAUST SYSTEM/TURBOCHARGER SYSTEM/CHARGE AIR COOLER AND PLUMBING - DIAGNOSIS AND TESTING) for diagnosing of low or high boost pressure due to leaks.

CHARGE AIR COOLER AND PLUMBING

DIAGNOSIS AND TESTING

CHARGE AIR COOLER SYSTEM - LEAKS

Low turbocharger boost pressure and low engine performance can be caused by leaks in the charge air cooler or plumbing. Fuel staining on the exhaust manifold can also be an indication that there are leaks in the air system. The following procedure outlines how to check for leaks in the charge air cooler system.

This procedure can also be used to check for leaks in the wastegate signal line or the wastegate canister.

(1) Loosen clamp and remove air inlet hose from turbocharger.

(2) Insert Special Tool 9022 Adapter into the turbocharger inlet. Tighten tool clamp to 8 N·m (72 in. lbs.).

CAUTION: Do not apply more than 138 kPa (20 psi) air pressure to the charge air cooler system, severe damage to the charge air cooler system may occur.

(3) Connect a regulated air supply to air fitting on Tool 9022 Adapter. Set air pressure to a Maximum of 138 kPa (20 psi).

(4) Using soapy water check the rubber sleeves, charge air cooler and intake manifold for leaks.

(5) Using soapy water check for leaks at the wastegate signal line, wastegate canister and wastegate command valve.

CHARGE AIR COOLER AND PLUMBING (Continued)

REMOVAL

REMOVAL - CAC INLET HOSE

(1) Open and support hood of vehicle.

(2) Loosen hose clamps at both ends of charge air cooler (CAC) inlet hose (Fig. 10).

(3) Remove CAC inlet hose from turbocharger and CAC.

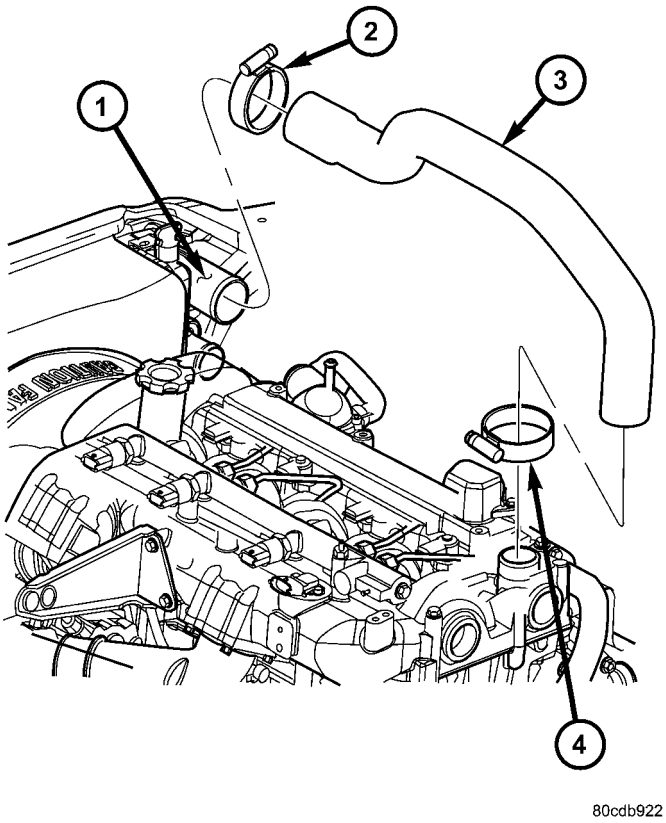

Fig. 10 CHARGE AIR COOLER INLET HOSE

1 - CHARGE AIR COOLER
2 - HOSE CLAMP
3 - CHARGE AIR COOLER INLET HOSE
4 - HOSE CLAMP

REMOVAL - CAC OUTLET HOSE

(1) Raise and support hood on vehicle.

(2) Loosen hose clamps at both ends of charge air cooler (CAC) outlet hose (Fig. 11).

(3) Remove hose from CAC and intake manifold inlet (Fig. 11).

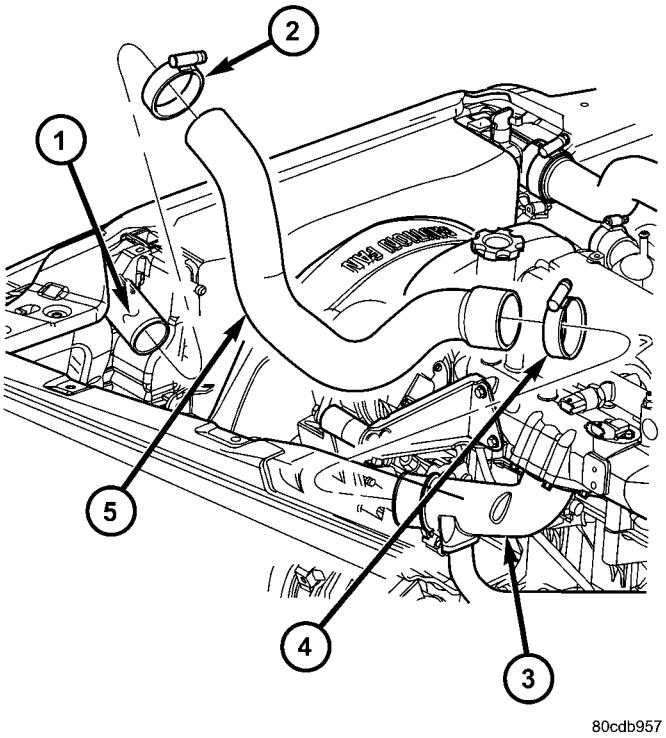

Fig. 11 CHARGE AIR COOLER OUTLET HOSE

1 - CHARGE AIR COOLER
2 - HOSE CLAMP
3 - INTAKE MANIFOLD INLET
4 - HOSE CLAMP
5 - CHARGE AIR COOLER OUTLET HOSE

INSTALLATION

INSTALLATION - CAC INLET HOSE

(1) Install charge air cooler (CAC) inlet hose on turbocharger and CAC (Fig. 10).

(2) Tighten hose clamps (Fig. 10).

(3) Close hood.

INSTALLATION - CAC OUTLET HOSE

(1) Install charge air cooler (CAC) outlet hose on CAC and intake manifold inlet.

(2) Tighten both hose clamp on CAC outlet hose (Fig. 11).

(3) Close hood.

TURBOCHARGER

DESCRIPTION

CAUTION: The turbocharger is a performance part and must not be tampered with. The wastegate bracket is an integral part of the turbocharger. Tampering with the wastegate components can reduce durability by increasing cylinder pressure and thermal loading due to incorrect inlet and exhaust manifold pressure. Poor fuel economy and failure to meet regulatory emissions laws may result. Increasing the turbocharger boost WILL NOT increase engine power.

The turbocharger is an exhaust-driven supercharger which increases the pressure and density of the air entering the engine. With the increase of air entering the engine, more fuel can be injected into the cylinders, which creates more power during combustion.

The turbocharger assembly consists of four (4) major component systems (Fig. 12) (Fig. 13):

- Turbine section
- Compressor section
- Bearing housing
- Wastegate

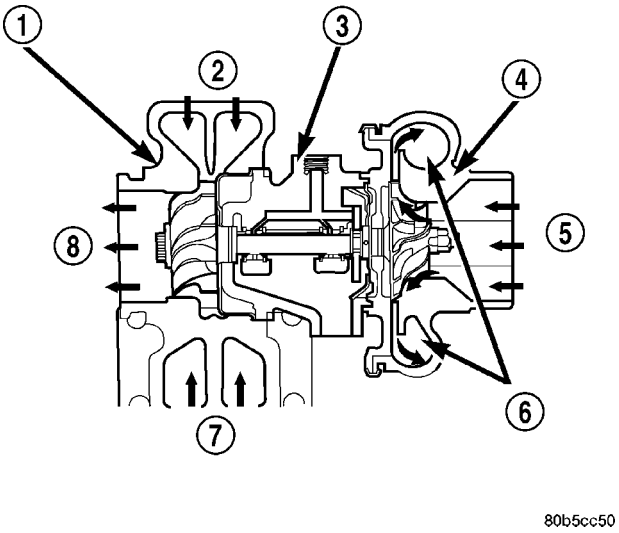

Fig. 12 Turbocharger Operation

1 - TURBINE SECTION
2 - EXHAUST GAS
3 - BEARING HOUSING
4 - COMPRESSOR SECTION
5 - INLET AIR
6 - COMPRESSED AIR TO ENGINE
7 - EXHAUST GAS
8 - EXHAUST GAS TO EXHAUST PIPE

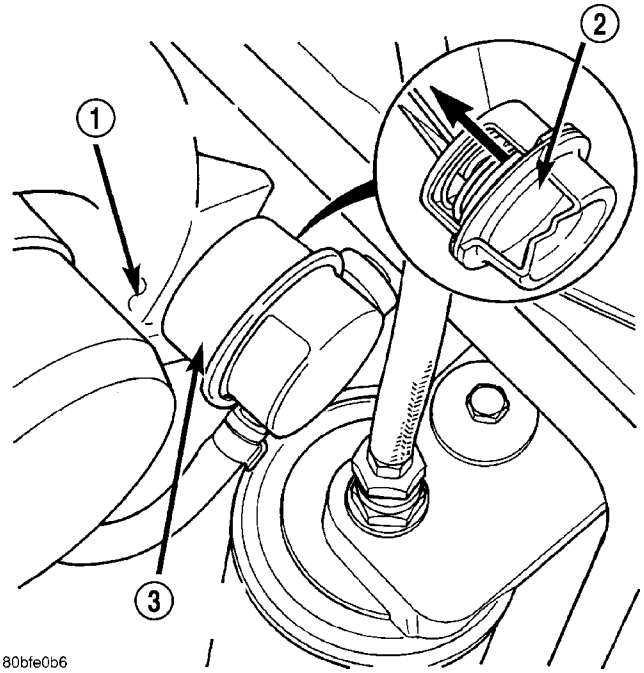

Fig. 13 Turbocharger Wastegate Actuator

1 - TURBOCHARGER
2 - DIAPHRAGM
3 - WASTE GATE ACTUATOR

OPERATION

Exhaust gas pressure and energy drive the turbine, which in turn drives a centrifugal compressor that compresses the inlet air, and forces the air into the engine through the charge air cooler and plumbing. Since heat is a by-product of this compression, the air must pass through a charge air cooler to cool the incoming air and maintain power and efficiency.

Increasing air flow to the engine provides:

- Improved engine performance
- Lower exhaust smoke density
- Improved operating economy
- Altitude compensation
- Noise reduction.

TURBOCHARGER (Continued)

The turbocharger also uses a wastegate (Fig. 14), which regulates intake manifold air pressure and prevents over boosting at high engine speeds. When the wastegate valve is closed, all of the exhaust gases flow through the turbine wheel. As the intake manifold pressure increases, the wastegate actuator opens the valve, diverting some of the exhaust gases away from the turbine wheel. This limits turbine shaft speed and air output from the impeller.

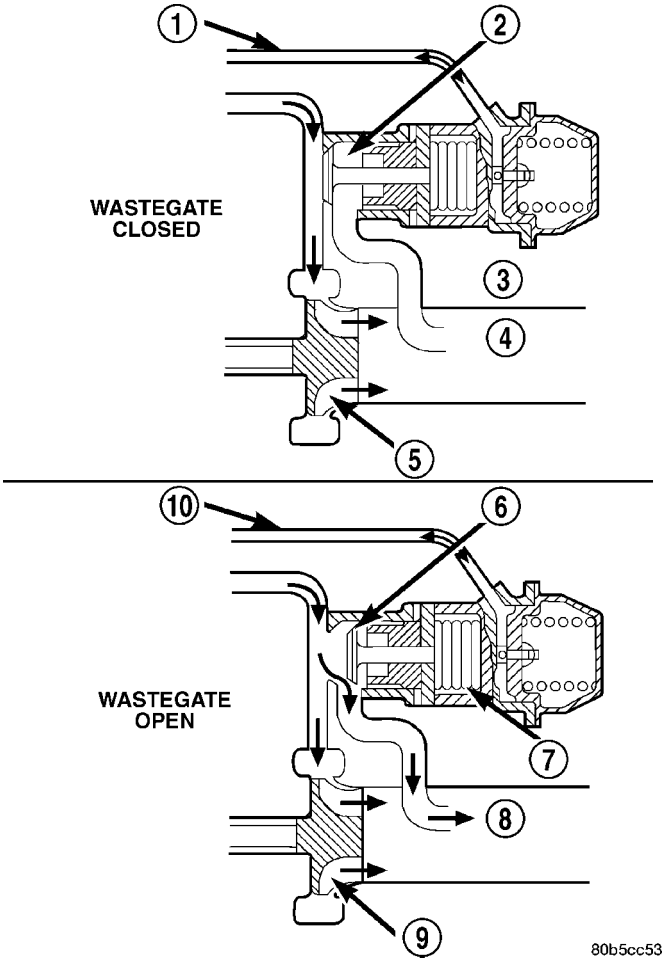

Fig. 14 Wastegate Operation

1 - SIGNAL LINE
2 - EXHAUST BYPASS VALVE
3 - WASTEGATE
4 - EXHAUST
5 - TURBINE
6 - EXHAUST BYPASS VALVE
7 - WASTEGATE
8 - EXHAUST
9 - TURBINE
10 - SIGNAL LINE

The turbocharger is lubricated by engine oil that is pressurized, cooled, and filtered. The oil is delivered to the turbocharger by a supply line that is tapped into the block. The oil travels into the bearing housing, where it lubricates the shaft and bearings (Fig. 15). A return pipe at the bottom of the bearing housing, routes the engine oil back to the crankcase.

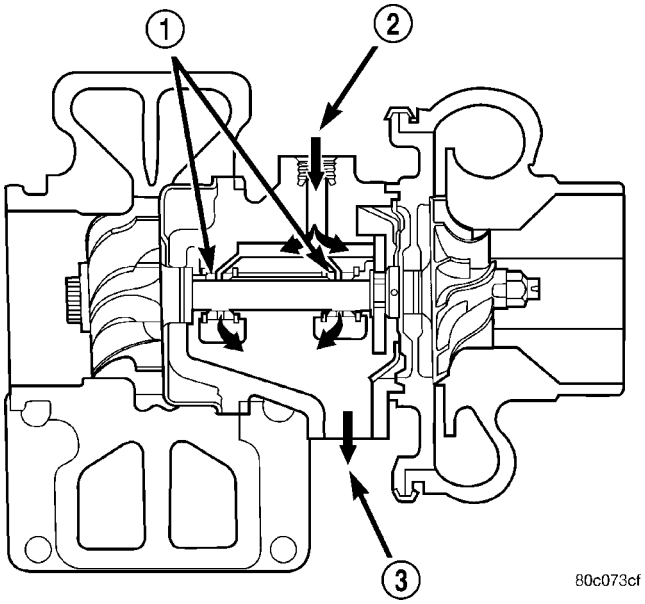

Fig. 15 Turbocharger Oil Supply and Drain

1 - BEARINGS
2 - OIL SUPPLY (FROM ENGINE BLOCK)
3 - OIL RETURN (TO OIL PAN)

The most common turbocharger failure is bearing failure related to repeated hot shutdowns with inadequate “cool-down” periods. A sudden engine shut down after prolonged operation will result in the transfer of heat from the turbine section of the turbocharger to the bearing housing. This causes the oil to overheat and break down, which causes bearing and shaft damage the next time the vehicle is started.

TURBOCHARGER (Continued)

Letting the engine idle after extended operation allows the turbine housing to cool to normal operating temperature. The following chart should be used as a guide in determining the amount of engine idle time required to sufficiently cool down the turbocharger before shut down, depending upon the type of driving and the amount of cargo.

TURBOCHARGER "COOL DOWN" CHART			
Driving Condition	**Load**	**Turbo-charger Tempera-ture**	**Idle Time (in minutes) Before Shut Down**
Stop & Go	Empty	Cool	Less than 1
Stop & Go	Medium	Warm	1
Highway Speeds	Medium	Warm	2
City Traffic	Max. GCWR	Warm	3
Highway Speeds	Max. GCWR	Warm	4
Uphill Grade	Max. GCWR	Hot	5

REMOVAL

(1) Disconnect negative battery cable.

(2) Remove engine cover (Refer to 9 - ENGINE - REMOVAL).

(3) Remove air cleaner assembly

(4) Remove air inlet hose from turbocharger

(5) Remove charge air cooler inlet hose from tubocharger and reposition out of way.

(6) Drain cooling system.

(7) Remove coolant recovery pressure container (Refer to 7 - COOLING/ENGINE/COOLANT RECOVERY PRESS CONTAINER - REMOVAL).

(8) Disconnect both EGR cooler coolant hoses at cooler (Fig. 16).

(9) Remove EGR valve to exhaust manifold retaining nuts (Fig. 16).

(10) Remove EGR cooler to exhaust manifold retaining bolt (Fig. 16).

(11) Reposition EGR cooler out of way.

(12) Remove exhaust manifold heat shield retaining bolts and remove heat shield (Fig. 17).

(13) Disconnect turbocharger oil supply line at turbocharger (Fig. 17).

(14) Raise vehicle on hoist.

(15) Disconnect exhaust pipe at turbocharger down pipe.

(16) Disconnect turbocharger oil return line at turbocharger (Fig. 17).

(17) Lower vehicle.

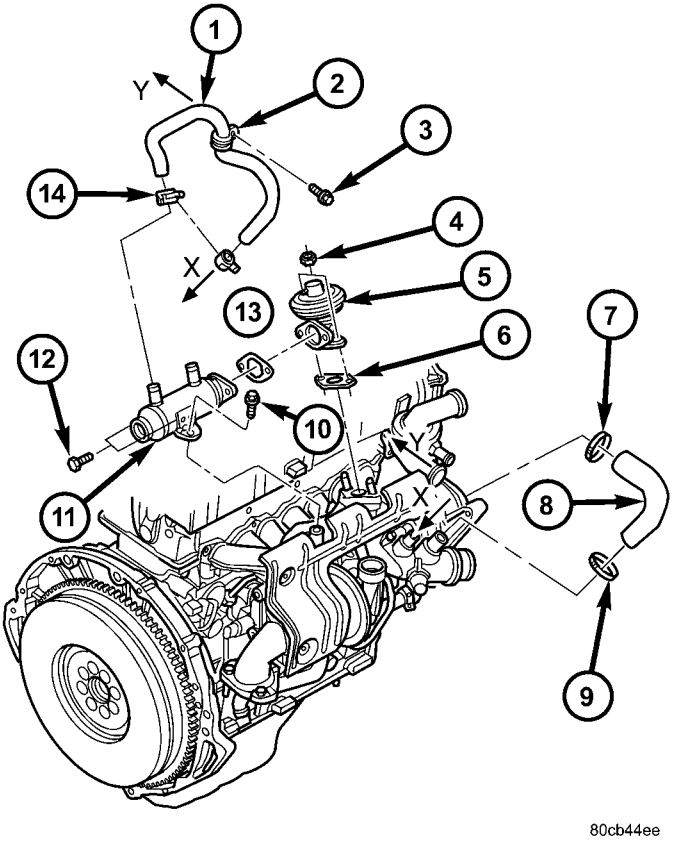

Fig. 16 EGR VALVE, COOLER, AND COMPONENTS

1 - COOLANT HOSE
2 - HOSE RETAINER
3 - RETAINING BOLT
4 - EGR VALVE RETAINING NUTS
5 - EGR VALVE
6 - EGR VALVE GASKET
7 - HOSE CLAMP
8 - COOLANT HOSE
9 - HOSE CLAMP
10 - EGR COOLER TO EXHAUST MANIFOLD RETAINING BOLT (2.8L)
11 - EGR COOLER (2.8L)
12 - EGR COOLER TO EGR VALVE RETAINING BOLTS (2.8L)
13 - EGR COOLER TO EGR VALVE GASKET (2.8L)
14 - HOSE CLAMP

(18) Remove accessory drive belt (Refer to 7 - COOLING/ACCESSORY DRIVE/DRIVE BELTS - REMOVAL).

(19) Remove viscous heater (Refer to 24 - HEATING & AIR CONDITIONING/PLUMBING/ELECTRIC COOLANT PUMP - REMOVAL).

(20) Remove the thermostat housing (Refer to 7 - COOLING/ENGINE/ENGINE COOLANT THERMOSTAT - REMOVAL).

TURBOCHARGER (Continued)

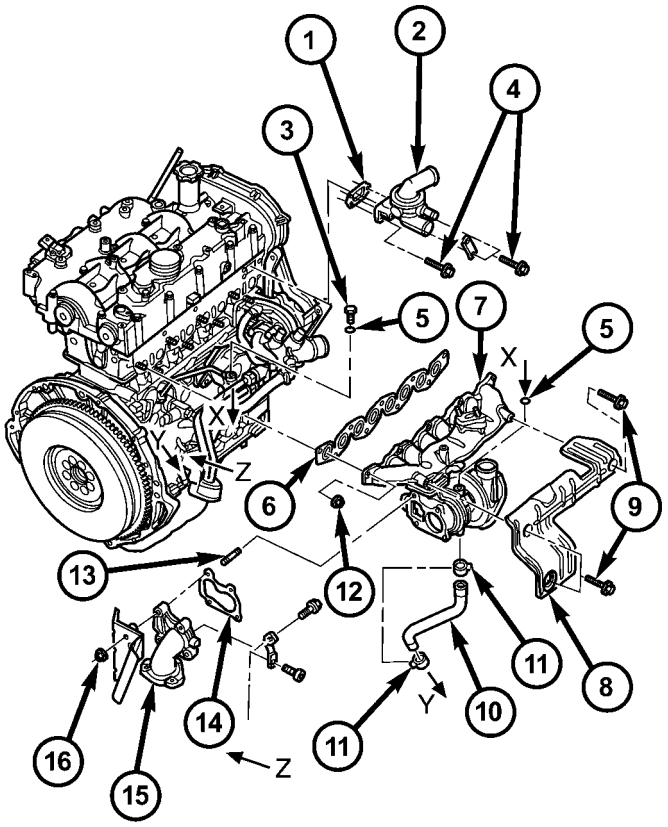

Fig. 17 EXHAUST MANIFOLD AND COMPONENTS

1 - THERMOSTAT HOUSING GASKET
2 - THERMOSTAT HOUSING
3 - TURBOCHARGER OIL SUPPLY LINE BANJO BOLT
4 - THERMOSTAT HOUSING RETAINING BOLTS
5 - BRASS WASHER
6 - EXHAUST MANIFOLD GASKET
7 - EXHAUST MANIFOLD
8 - EXHAUST MANIFOLD HEAT SHIELD
9 - EXHAUST MANIFOLD HEAT SHIELD RETAINING BOLTS
10 - OIL RETURN HOSE
11 - HOSE CLAMPS
12 - EXHAUST MANIFOLD RETAINING NUTS
13 - TURBOCHARGER DOWN PIPE STUDS
14 - TURBOCHARGER DOWN PIPE GASKET
15 - TURBOCHARGER DOWN PIPE
16 - TURBOCHARGER DOWN PIPE RETAINING NUT

(21) Remove exhaust manifold retaining nuts and remove exhaust manifold and turbocharger assembly from vehicle (Fig. 17).

(22) Remove turbocharger to exhaust manifold retaining nuts and separate turbocharger from exhaust manifold (Fig. 18).

CLEANING

All old gaskets should be inspected for any tears or signs of prior leakage. If any gaskets show such indications, they should be replaced with new gaskets.

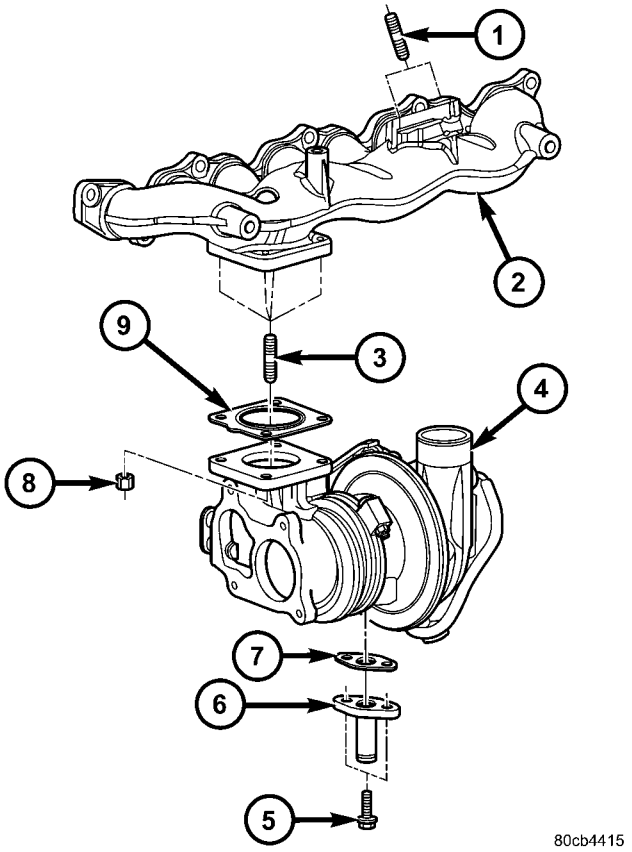

Fig. 18 EXHAUST MANIFOLD AND TURBOCHARGER ASSEMBLY

1 - EGR VALVE MOUNTING STUDS
2 - EXHAUST MANIFOLD
3 - TURBOCHARGER TO EXHAUST MANFOLD MOUNTING STUDS
4 - TURBOCHARGER ASSEMBLY
5 - TURBOCHARGER OIL RETURN FITTING ATTACHING BOLT
6 - TURBOCHARGER OIL RETURN FITTING
7 - OIL RETURN FITTING GASKET
8 - RETAINING NUT
9 - TURBOCHARGER TO EXHAUST MANIFOLD GASKET

All gasket mating surfaces must be cleaned of old gasket material to produce a smooth and dirt free sealing surface for the new gasket.

INSTALLATION

(1) Connect turbocharger to exhaust manifold with new gasket (Fig. 18). Torque retaining nuts to 32.4N·m.

NOTE: After Tightening The Exhaust Manifold To Specification Using a Diagonal-Cross Pattern, Retrace The Pattern Checking The Correct Torque Value Again.

(2) Install exhaust manifold and turbocharger assembly with new gasket in position on studs in cylinder head (Fig. 17). Install retaining nuts and torque to 36N·m.

TURBOCHARGER (Continued)

(3) Install thermostat housing (Refer to 7 - COOLING/ENGINE/ENGINE COOLANT THERMOSTAT - INSTALLATION).

(4) Install viscous heater (Refer to 24 - HEATING & AIR CONDITIONING/PLUMBING/ELECTRIC COOLANT PUMP - INSTALLATION).

(5) Install accessory drive belt (Refer to 7 - COOLING/ACCESSORY DRIVE/DRIVE BELTS - INSTALLATION).

(6) Raise vehicle on hoist.

(7) Connect turbocharger oil return line at turbocharger (Fig. 17).

(8) Connect exhaust pipe at turbocharger downpipe.

(9) Lower vehicle from hoist.

(10) Connect oil supply line at turbocharger (Fig. 17). Torque banjo fitting to 24.5N·m.

(11) Install exhaust manifold heat shield (Fig. 17). Torque retaining bolts to 24.5N·m (18 lbs.ft.).

(12) Reposition EGR cooler and or EGR valve assembly on exhaust manifold (Fig. 16). Torque retaining nuts and bolt to 32.4N·m.

(13) Connect EGR pipe to EGR valve. Tighten bolts to 32.4N·m.

(14) Connect EGR cooler coolant hoses at cooler (2.8L) (Fig. 16).

(15) Install coolant recovery pressure container (Refer to 7 - COOLING/ENGINE/COOLANT RECOVERY PRESS CONTAINER - INSTALLATION).

(16) Refill cooling system (Refer to 7 - COOLING/ENGINE - STANDARD PROCEDURE).

(17) Connect charge air cooler inlet hose at turbocharger.

(18) Install air cleaner assembly.

(19) Connect air inlet hose to turbocharger.

(20) Install engine cover (Refer to 9 - ENGINE - INSTALLATION).

(21) Connect negative battery cable.

FRAME & BUMPERS

TABLE OF CONTENTS

	page
FRONT FASCIA	
REMOVAL	1
INSTALLATION	1
REAR FASCIA	
REMOVAL	2
INSTALLATION	2
REAR FASCIA SUPPORT	
REMOVAL	2
INSTALLATION	3
REAR FASCIA - STEP PAD	
REMOVAL	3
INSTALLATION	3
REAR FASCIA - RAIN DIVERTER	
REMOVAL	3
INSTALLATION	3
FRAME	
SPECIFICATIONS	
SPECIFICATIONS - FRAME DIMENSIONS	3
SPECIFICATIONS - TORQUE	5
FRONT SKID PLATE	
REMOVAL	6
INSTALLATION	6
ENGINE CRADLE CROSSMEMBER	
REMOVAL	6
INSTALLATION	6
TRANSFER CASE SKID PLATE	
REMOVAL	7
INSTALLATION	7
REAR CROSSMEMBER	
REMOVAL	7
INSTALLATION	7
FRONT TOW HOOK	
REMOVAL	8
INSTALLATION	8
REAR TOW HOOK	
REMOVAL	8
INSTALLATION	8
TRAILER HITCH	
REMOVAL	8
INSTALLATION	8
FUEL TANK SKID PLATE	
REMOVAL	8
INSTALLATION	9

FRONT FASCIA

REMOVAL

(1) Remove the grille. (Refer to 23 - BODY/EXTERIOR/GRILLE - REMOVAL)

(2) Remove the turn signal lamps. (Refer to 8 - ELECTRICAL/LAMPS/LIGHTING - EXTERIOR/PARK/TURN SIGNAL LAMP - REMOVAL)

(3) Remove the fascia screws next to the turn signal lamps. (Fig. 1)

(4) Remove the two screws at the bottom of the fascia.

(5) Remove the three plastic rivets securing the fascia to each wheelhouse splash shield.

(6) Release the three tabs securing the fascia to the grille opening reinforcement.

(7) Remove the fascia.

INSTALLATION

(1) Position the fascia onto the vehicle and align the center pin into the hole located near the center of the grille opening reinforcement. (Fig. 1)

(2) Secure the three tabs onto the grille reinforcement fully.

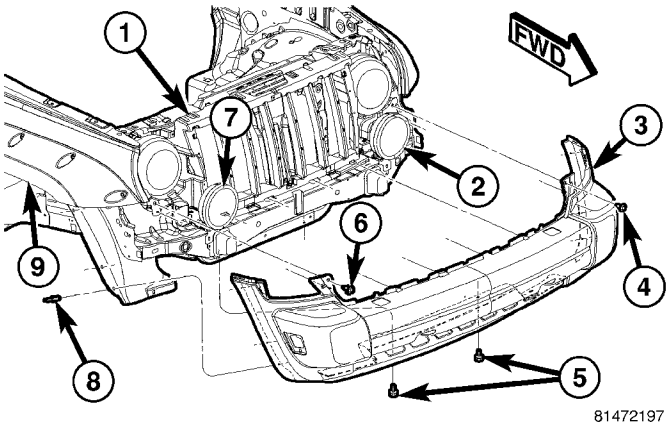

Fig. 1 FRONT FASCIA – RENEGADE SHOWN, OTHERS SIMILAR

1 - GRILLE OPENING REINFORCEMENT
2 - FOG LAMP
3 - FASCIA
4 - LEFT SCREW (1)
5 - LOWER BOLTS (2)
6 - RIGHT SCREW
7 - FOG LAMP
8 - WHEELHOUSE SPLASH SHIELD RIVETS (3 PER SIDE)
9 - WHEEL OPENING FLARE MOLDING

FRONT FASCIA (Continued)

(3) Install the two screws next to the turn signal lamps.

(4) Install the two lower screws.

(5) Install new rivets attaching the wheelhouse splash shield to the fascia.

(6) Install the turn signal lamps. (Refer to 8 - ELECTRICAL/LAMPS/LIGHTING - EXTERIOR/ PARK/TURN SIGNAL LAMP - INSTALLATION)

(7) Install the grille. (Refer to 23 - BODY/EXTERIOR/GRILLE - INSTALLATION)

REAR FASCIA

REMOVAL

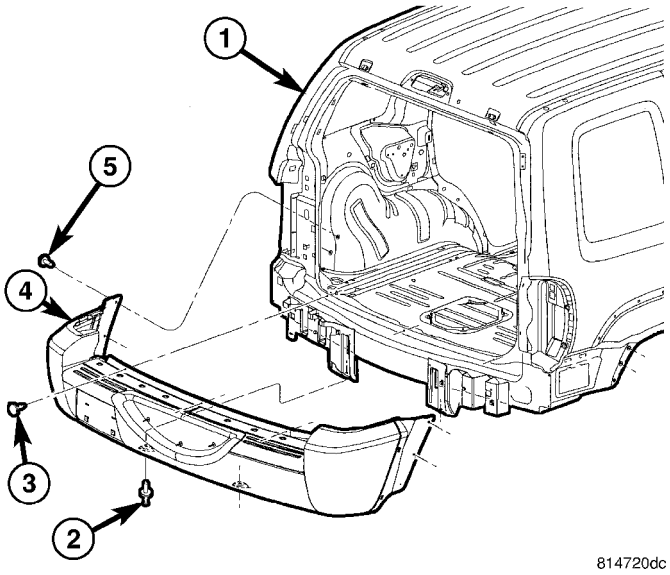

Fig. 2 REAR FASCIA

1 - SWING GATE OPENING
2 - RIVITS (2)
3 - PUSH PIN FASTENERS
4 - REAR FASCIA
5 - SCREWS (4)

(1) Remove the wheel flares (rear). (Refer to 23 - BODY/EXTERIOR/REAR WHEEL OPENING FLARE MOLDINGS - REMOVAL)

(2) Remove the rear lamp units. (Refer to 8 - ELECTRICAL/LAMPS/LIGHTING - EXTERIOR/ REAR LAMP UNIT - REMOVAL)

(3) Remove the four side bolts. (Fig. 2)

(4) Remove the two bottom rivets.

(5) Remove the 3 screws along the upper edge.

(6) Separate the side plastic retainers and remove the fascia from the vehicle.

INSTALLATION

NOTE: Fascia must be pushed completely forward to allow the plastic retainers full engagement in their respective slots.

(1) Install the fascia and insert the plastic retainers. (Fig. 2)

(2) Install the three upper screws.

(3) Install the four side bolts.

(4) Install two bottom rivets.

(5) Install the rear lamp units. (Refer to 8 - ELECTRICAL/LAMPS/LIGHTING - EXTERIOR/REAR LAMP UNIT - INSTALLATION)

(6) Install the rear half wheel opening flares. (Refer to 23 - BODY/EXTERIOR/WHEEL OPENING FLARE MOLDING - INSTALLATION)

REAR FASCIA SUPPORT

REMOVAL

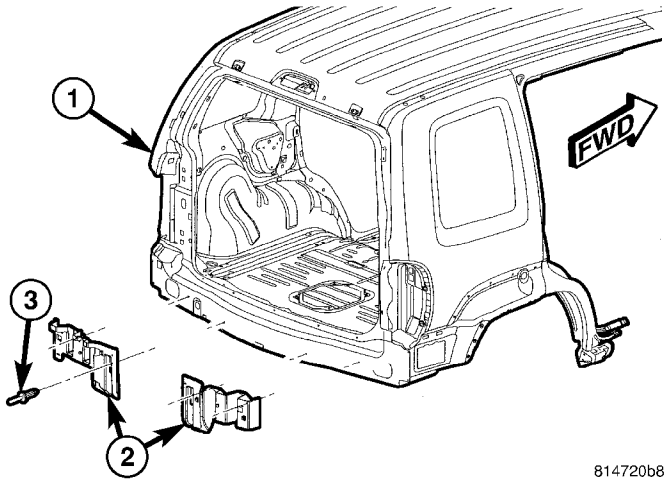

Fig. 3 REAR FASCIA SUPPORT BRACKETS

1 - SWING GATE OPENING
2 - FASCIA SUPPORTS
RIVETS (4)

(1) Remove the rear fascia assembly. (Refer to 13 - FRAME & BUMPERS/BUMPERS/REAR FASCIA - REMOVAL)

(2) Remove the four rivets and remove the two fascia supports (Fig. 3).

(3) For export models, remove the seven bolts and remove the fascia support. (Fig. 4)

REAR FASCIA SUPPORT (Continued)

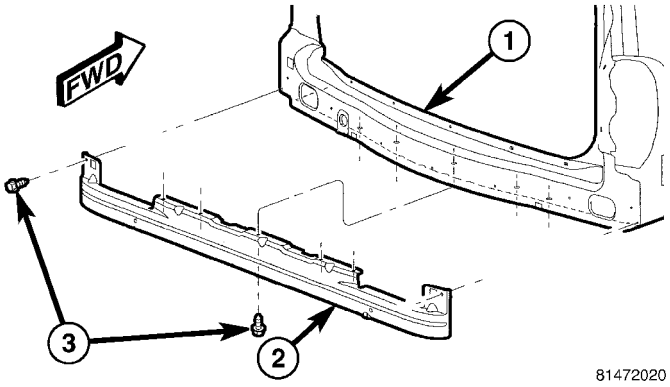

Fig. 4 REAR FASCIA SUPPORT CROSSMEMBER

1 - SWING GATE OPENING
2 - FASCIA SUPPORT
3 - BOLTS (7)

INSTALLATION

(1) For export models, install the fascia support and install the seven bolts. (Fig. 4)

(2) Install the fascia supports onto the vehicle and install four new rivets. (Fig. 3)

(3) Install the rear fascia assembly. (Refer to 13 - FRAME & BUMPERS/BUMPERS/REAR FASCIA - INSTALLATION)

REAR FASCIA - STEP PAD

REMOVAL

(1) Remove the rear fascia. (Refer to 13 - FRAME & BUMPERS/BUMPERS/REAR FASCIA - REMOVAL)

(2) Remove the rain diverter. (Refer to 13 - FRAME & BUMPERS/BUMPERS/REAR FASCIA - RAIN DIVERTER - REMOVAL)

(3) Remove the retaining clips and remove the step pads.

INSTALLATION

(1) Install the step pads and new retainer clips.

(2) Install the rain diverter. (Refer to 13 - FRAME & BUMPERS/BUMPERS/REAR FASCIA - RAIN DIVERTER - INSTALLATION)

(3) Install the rear fascia. (Refer to 13 - FRAME & BUMPERS/BUMPERS/REAR FASCIA - INSTALLATION)

REAR FASCIA - RAIN DIVERTER

REMOVAL

(1) Open the swing gate.

(2) Remove the three rivets from the diverter and remove the diverter. (Fig. 5)

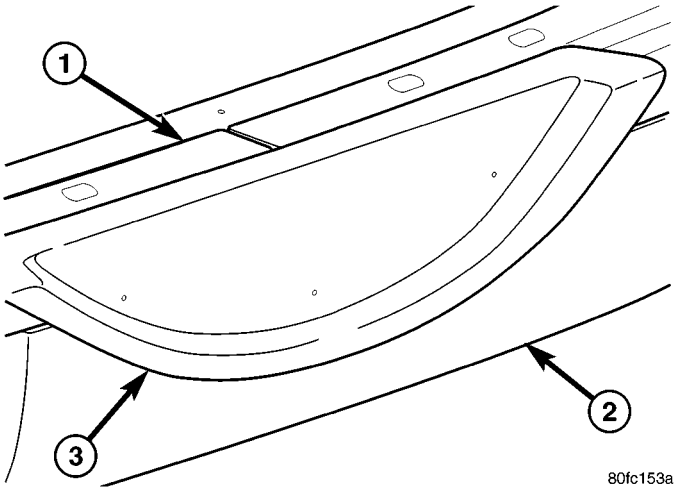

Fig. 5 RAIN DIVERTER

1 - STEP PAD
2 - REAR FASCIA
3 - RAIN DIVERTER

INSTALLATION

(1) Install the diverter and install new rivets.

FRAME

SPECIFICATIONS

SPECIFICATIONS - FRAME DIMENSIONS

Frame dimensions are listed in metric scale. All dimensions are from center to center of Principal Locating Point (PLP), or from center to center of PLP and fastener location.

VEHICLE PREPARATION

Position the vehicle on a level work surface. Using screw or bottle jacks, adjust the vehicle PLP heights to the specified dimension above a level work surface. Vertical dimensions can be taken from the work surface to the locations indicated were applicable.

NOTE: All measurements are in MM.

DIMENSION ILLUSTRATIONS

DESCRIPTION	FIGURE
TOP VIEW	(6)
SIDE VIEW	(7)

FRAME (Continued)

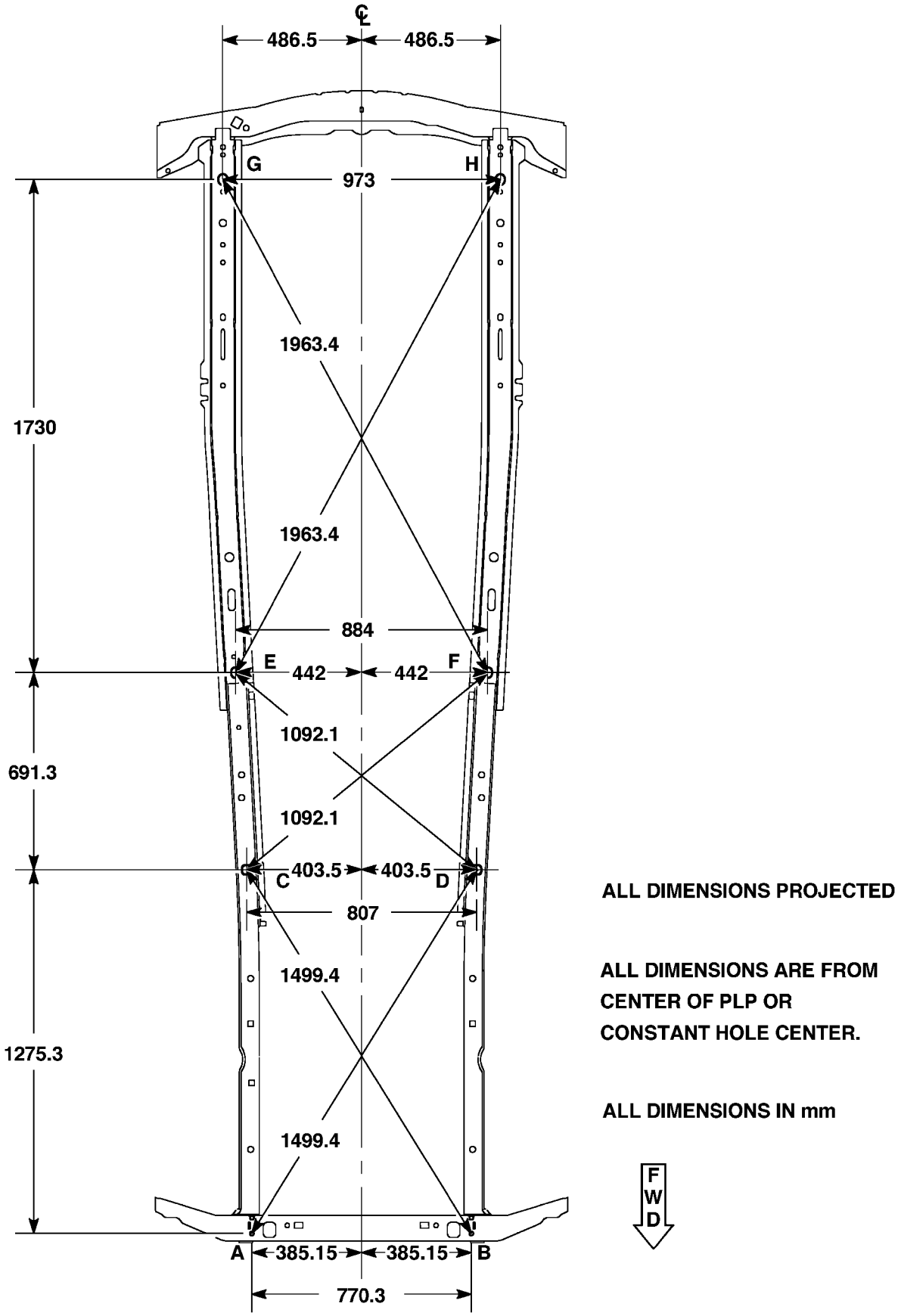

80caec05

Fig. 6 BOTTOM VIEW

FRAME (Continued)

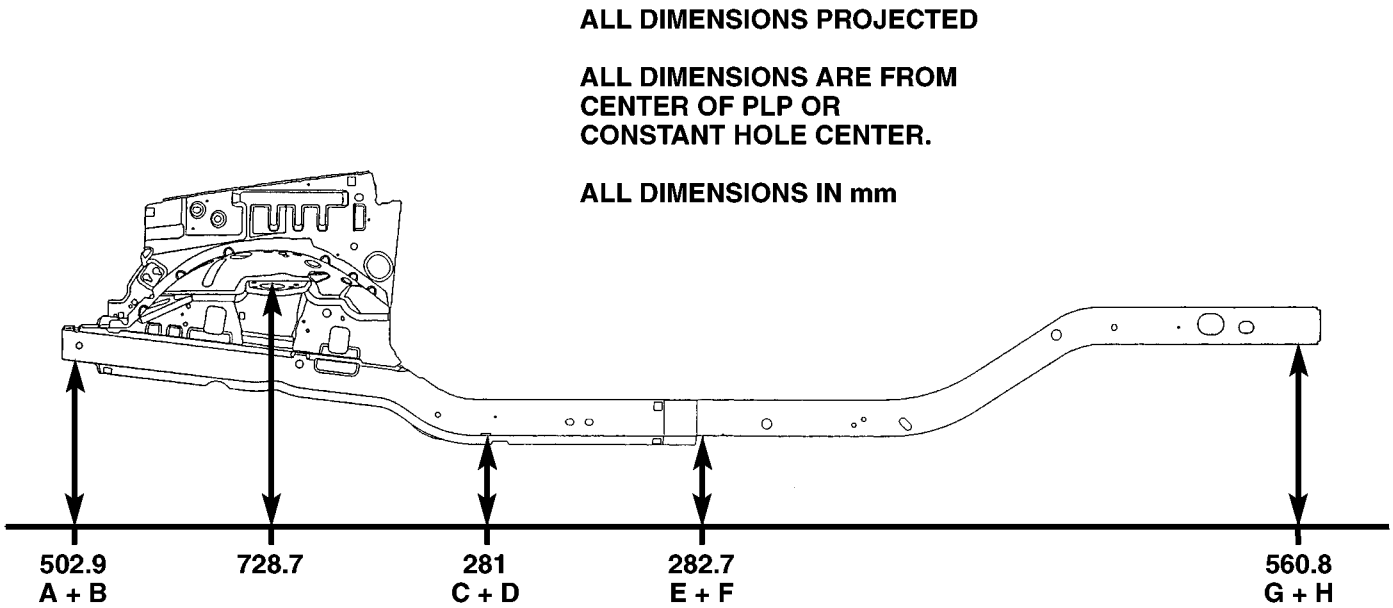

80fa8784

Fig. 7 SIDE VIEW

SPECIFICATIONS - TORQUE

DESCRIPTION	N·m	Ft. Lbs.	In. Lbs.
ENGINE CRADLE CROSSMEMBER MOUNTING BOLTS	122	90	—
ENGINE MOUNT THROUGH BOLTS/NUTS	88	65	—
FRONT SKID PLATE BOLTS	61	45	—
FRONT TOW HOOK NUTS/BOLT	61	45	—
FUEL TANK SKID PLATE	88	65	—
REAR CROSSMEMBER BOLTS	47	35	—
REAR TOW HOOK BOLTS	88	65	—
TRAILER HITCH BOLTS	88	65	—
TRANSFER CASE SKID PLATE BOLTS	34	25	—
TRANSMISSION MOUNT THROUGH BOLT/NUT	88	65	—

FRONT SKID PLATE

REMOVAL

(1) Raise and support the vehicle.

(2) Remove the skid plate bolts and remove the skid plate. (Fig. 8)

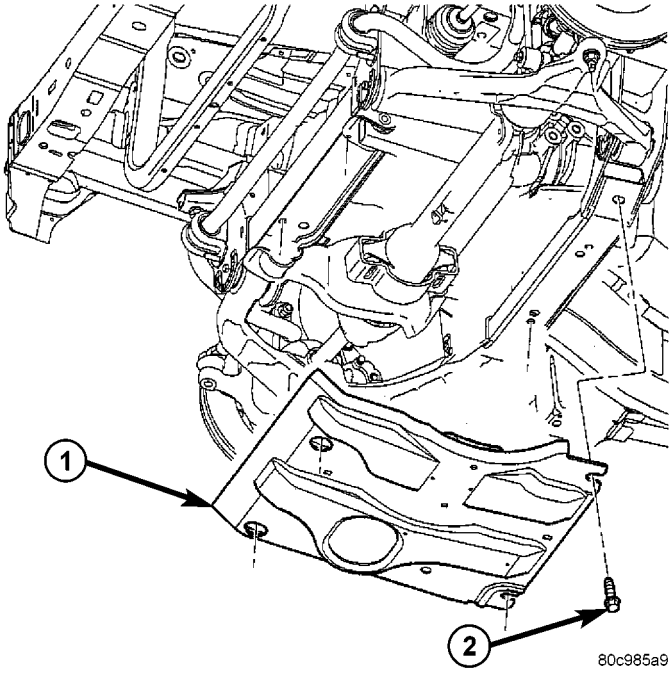

Fig. 8 SKID PLATE

1 - SKID PLATE
2 - BOLTS (4)

INSTALLATION

(1) Install the skid plate.

(2) Install the bolts and tighten to 61 N·m (45 ft. lbs.).

ENGINE CRADLE CROSSMEMBER

REMOVAL

(1) Install engine support tool 8534 or equivalent.

(2) Raise and support the vehicle.

(3) Remove the lower control arms. (Refer to 2 - SUSPENSION/FRONT/LOWER CONTROL ARM - REMOVAL)

(4) Remove the sway bar. (Refer to 2 - SUSPENSION/FRONT/STABILIZER BAR - REMOVAL)

(5) Remove the front axle, if equipped. (Refer to 3 - DIFFERENTIAL & DRIVELINE/FRONT AXLE - REMOVAL)

(6) Remove the power steering rack. (Refer to 19 - STEERING/GEAR - REMOVAL)

(7) Loosen the engine mount through bolts. (Fig. 9)

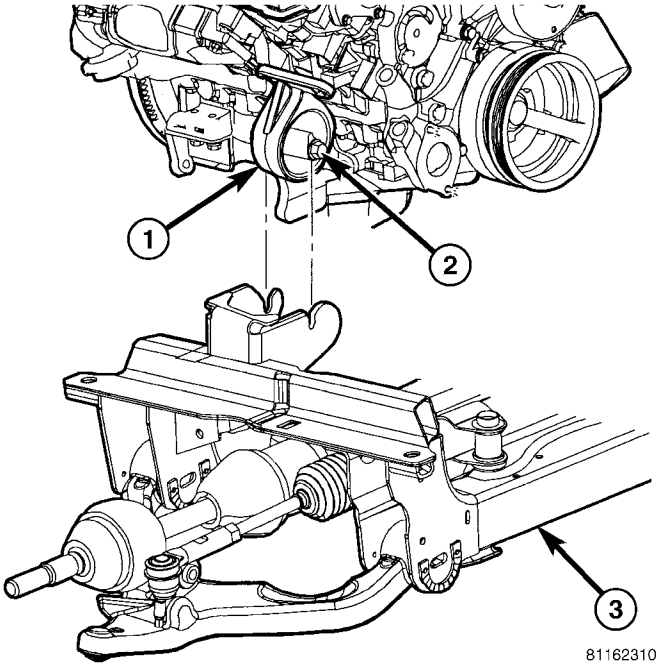

Fig. 9 ENGINE MOUNT

1 - ENGINE MOUNT
2 - THROUGH BOLT
3 - ENGINE CRADLE CROSSMEMBER

(8) Support the engine cradle with a suitable lifting device.

(9) Using a grease pencil or equivalent, mark the location of the engine support cradle.

(10) Remove the engine cradle support bolts and remove the engine cradle. (Fig. 10)

INSTALLATION

(1) Raise and support the vehicle.

(2) Using a suitable lifting device raise the engine cradle into the vehicle while lining up the engine mount through bolts.

(3) Align the engine cradle to the marks made during removal and install the mounting and inner rail bolts.

(4) Tighten the mounting front bolts to 122 N·m (90 ft. lbs.) and tighten the rear bolts to 115 N·m (85 ft. lbs.).

(5) Tighten the engine mount through bolts to 88 N·m (65 ft. lbs.).

(6) Install the power steering rack. (Refer to 19 - STEERING/GEAR - INSTALLATION)

(7) Install the front axle, if equipped. (Refer to 3 - DIFFERENTIAL & DRIVELINE/FRONT AXLE - INSTALLATION)

(8) Install the stabilizer bar. (Refer to 2 - SUSPENSION/FRONT/STABILIZER BAR - INSTALLATION)

ENGINE CRADLE CROSSMEMBER (Continued)

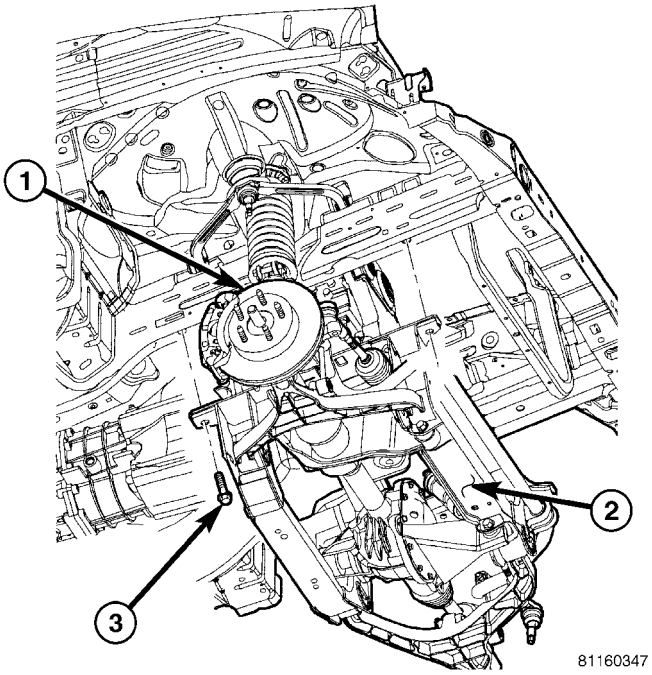

Fig. 10 ENGINE CRADLE

2 - ENGINE CRADLE CROSSMEMBER
3 - ENGINE CRADLE SUPPORT BOLTS (4)

(9) Install the lower control arms. (Refer to 2 - SUSPENSION/FRONT/LOWER CONTROL ARM - INSTALLATION)

(10) Lower the vehicle and remove the engine support tool.

TRANSFER CASE SKID PLATE

REMOVAL

(1) Remove the bolts and remove the skid plate. (Fig. 11)

INSTALLATION

(1) Install the skid plate.

(2) Install the bolts and tighten to 34 N·m (25 ft. lbs.).

REAR CROSSMEMBER

REMOVAL

(1) Raise and support the vehicle.

(2) Support the transmission with a suitable lifting device.

(3) Remove the transmission mount through bolt.

(4) Remove the six crossmember bolts and remove the crossmember. (Fig. 12)

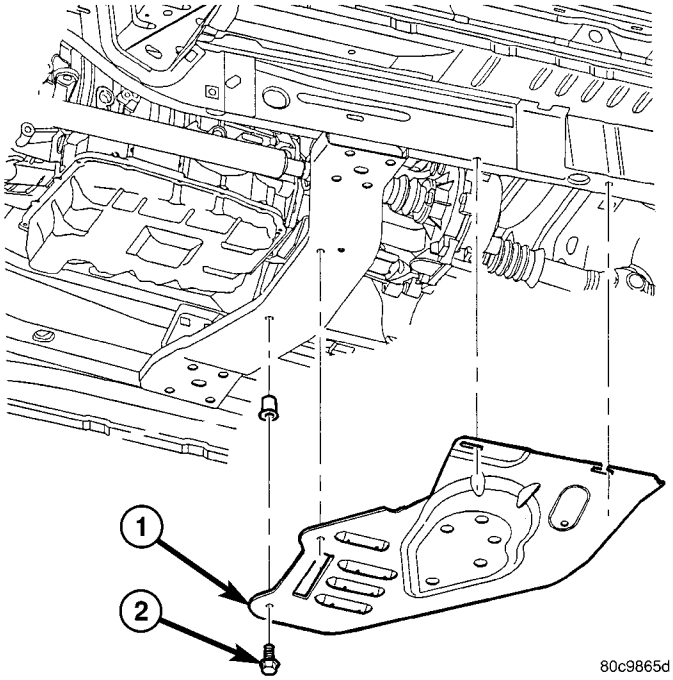

Fig. 11 SKID PLATE

1 - SKID PLATE
2 - BOLTS

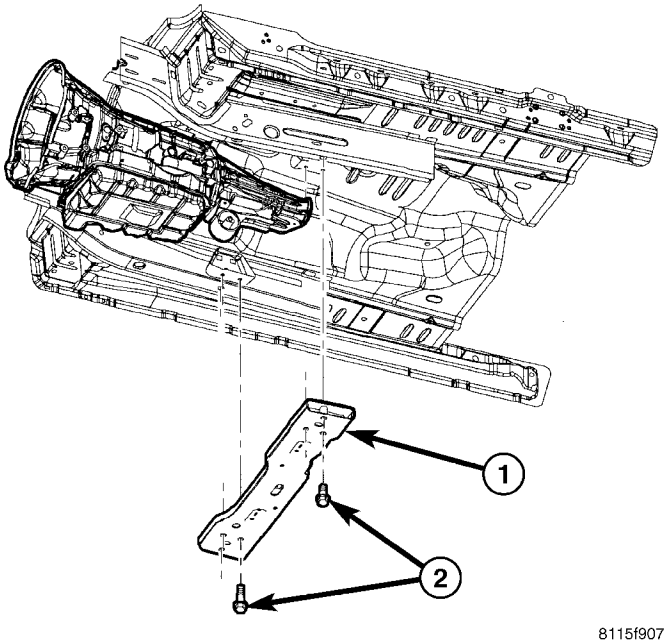

Fig. 12 REAR CROSSMEMBER

1 - CROSSMEMBER
2 - BOLTS (6)

INSTALLATION

(1) Install the crossmember and install the bolts.

(2) Tighten the bolts to 47 N·m (35 ft. lbs.)

(3) Install transmission mount through bolt and tighten to 88 N·m (65 ft. lbs.).

FRONT TOW HOOK

REMOVAL

NOTE: Front fascia must be removed to replace the stud plate. (Refer to 13 - FRAME & BUMPERS/ BUMPERS/FRONT FASCIA - REMOVAL)

(1) Remove the nuts and bolt and remove the tow eye/hook. (Fig. 13)

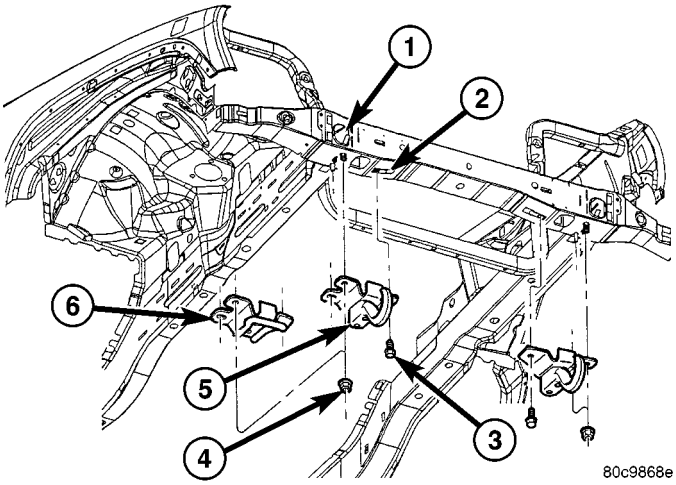

Fig. 13 TOW HOOKS/EYE

1 - STUD PLATE
2 - U-NUT
3 - BOLTS
4 - NUTS
5 - TOW HOOK
6 - TOW EYE

INSTALLATION

(1) Install the stud plate if previously removed.
(2) Install the tow eye/hook.
(3) Install the nuts and bolt and tighten to 61 N·m (45 ft. lbs.).
(4) Install the front fascia if the stud plate was replaced. (Refer to 13 - FRAME & BUMPERS/ BUMPERS/FRONT FASCIA - INSTALLATION)

REAR TOW HOOK

REMOVAL

(1) Remove the bolts and remove the tow hook/eye. (Fig. 14)

INSTALLATION

(1) Install the tow hook/eye.
(2) Install the bolts and tighten to 88 N·m (65 ft. lbs.).

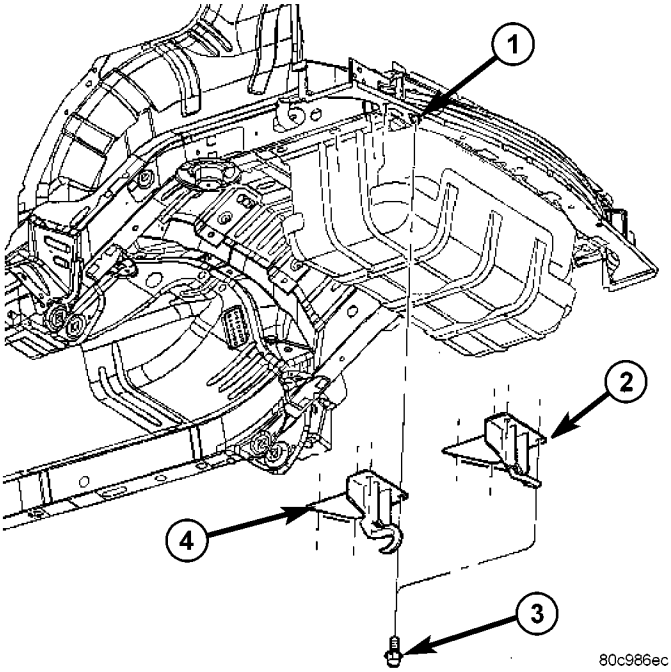

Fig. 14 TOW HOOK/EYE

1 - U-NUT
2 - TOW EYE
3 - BOLTS
4 - TOW HOOK

TRAILER HITCH

REMOVAL

(1) Remove the tow hooks, if equipped. (Refer to 13 - FRAME & BUMPERS/FRAME/REAR TOW HOOK - REMOVAL)
(2) Disconnect trailer electrical connector.
(3) Support the hitch with a suitable lifting device.
(4) Remove the bolts and remove the trailer hitch. (Fig. 15)

INSTALLATION

(1) Support the hitch with a suitable lifting device and install the hitch.
(2) Install the bolts and tighten to 88 N·m (65 ft. lbs.)
(3) Connect the electrical connector.

FUEL TANK SKID PLATE

REMOVAL

(1) Raise and support the vehicle.
(2) Support the skid plate with a suitable lifting device.
(3) Remove the trailer hitch, if equipped. (Refer to 13 - FRAME & BUMPERS/FRAME/TRAILER HITCH - REMOVAL)

FUEL TANK SKID PLATE (Continued)

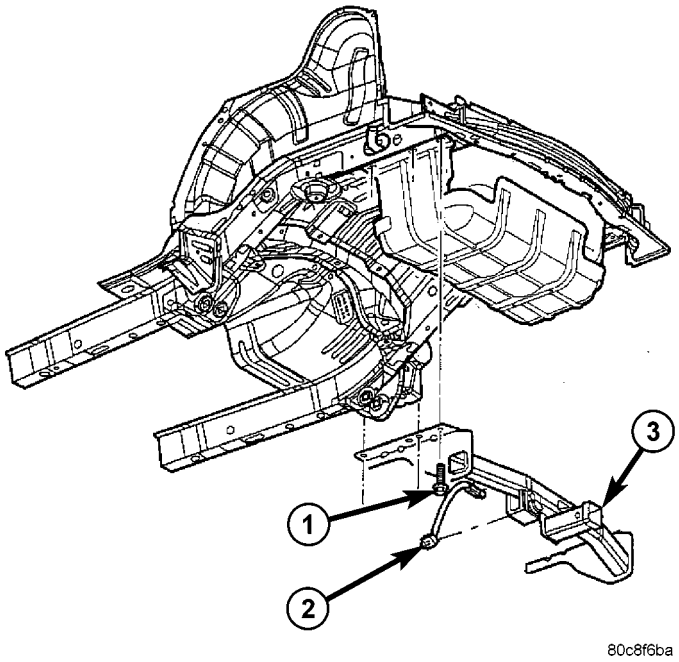

Fig. 15 TRAILER HITCH

1 - BOLTS
2 - TRAILER LIGHTS ELECTRICAL CONNECTOR
3 - TRAILER HITCH

(4) Remove the tow hooks, if not previously removed. (Refer to 13 - FRAME & BUMPERS/FRAME/REAR TOW HOOK - REMOVAL)

(5) Remove the bolts and remove the fuel tank skid plate.

INSTALLATION

(1) Install the skid plate and support with a suitable lifting device.

(2) Install the trailer hitch, if equipped. (Refer to 13 - FRAME & BUMPERS/FRAME/TRAILER HITCH - INSTALLATION)

(3) Install the tow hooks, if equipped. (Refer to 13 - FRAME & BUMPERS/FRAME/REAR TOW HOOK - INSTALLATION)

(4) Install the bolts and tighten to 88 N·m (65 ft. lbs.).

FUEL SYSTEM

TABLE OF CONTENTS

page

FUEL DELIVERY - 2.4L/3.7L GAS 1
FUEL INJECTION - 2.4L/3.7L GAS 24
FUEL DELIVERY - 2.8L DIESEL 44
FUEL INJECTION - 2.8L DIESEL 77

FUEL DELIVERY - 2.4L/3.7L GAS

TABLE OF CONTENTS

page

FUEL DELIVERY - 2.4L/3.7L GAS
DESCRIPTION 2
OPERATION 2
STANDARD PROCEDURE - FUEL SYSTEM PRESSURE RELEASE 2
SPECIFICATIONS
FUEL SYSTEM PRESSURE 4
TORQUE 4
SPECIAL TOOLS
FUEL SYSTEM 5
FLOW MANAGEMENT VALVE
DESCRIPTION 6
OPERATION 6
FUEL FILTER
DESCRIPTION 6
FUEL LEVEL SENDING UNIT / SENSOR
DESCRIPTION 6
OPERATION 6
FUEL LINES
DESCRIPTION 6
QUICK CONNECT FITTING
DESCRIPTION 7
STANDARD PROCEDURE - QUICK-CONNECT FITTINGS 7
FUEL PRESSURE REGULATOR
DESCRIPTION 11
OPERATION 11
FUEL PUMP
DESCRIPTION 12
OPERATION 12
FUEL PUMP MODULE
DESCRIPTION 12
OPERATION 12
REMOVAL 13
INSTALLATION 13
FUEL RAIL
DESCRIPTION 14
OPERATION 14
REMOVAL 15
INSTALLATION 17
FUEL TANK
DESCRIPTION 18
OPERATION 18
REMOVAL 18
INSTALLATION 20

FUEL DELIVERY - 2.4L/3.7L GAS

DESCRIPTION

The fuel delivery system consists of:

- the fuel pump module containing the electric fuel pump, fuel pressure regulator, fuel gauge sending unit (fuel level sensor) and a fuel filter
- fuel tubes/lines/hoses
- quick-connect fittings
- fuel injector rail
- fuel tank
- fuel tank filler/vent tube assembly
- fuel tank filler tube cap
- accelerator pedal
- throttle cable

OPERATION

Fuel is picked up in the fuel tank by the fuel pump module. This module is located on the bottom of the fuel tank.

A fuel return system is provided within the fuel pump module using check valves. A separate fuel return line from the engine to the tank is not used.

The fuel pressure regulator and the main fuel filter are combined within the fuel pump module.

The fuel tank assembly consists of: the fuel tank, fuel pump module assembly, fuel pump module lock ring/gasket, ORVR components. Refer to 25, Emission Control System for ORVR information.

A fuel filler/vent tube assembly using a pressure/vacuum, 1/4 turn fuel filler cap is used. A one-way check valve is installed into the tanks fuel fill fitting.

Also to be considered part of the fuel system is the evaporation control system and ORVR system. This is designed to reduce the emission of fuel vapors into the atmosphere. The description and function of the Evaporative Control System is found in 25, Emission Control Systems.

Both fuel filters are designed for extended service. They do not require normal scheduled maintenance.

STANDARD PROCEDURE - FUEL SYSTEM PRESSURE RELEASE

Use following procedure if the fuel injector rail is, or is not equipped with a fuel pressure test port.

(1) Remove fuel fill cap.

(2) Remove fuel pump relay from Power Distribution Center (PDC). For location of relay, refer to label on underside of PDC cover.

(3) Start and run engine until it stalls.

(4) Attempt restarting engine until it will no longer run.

(5) Turn ignition key to OFF position.

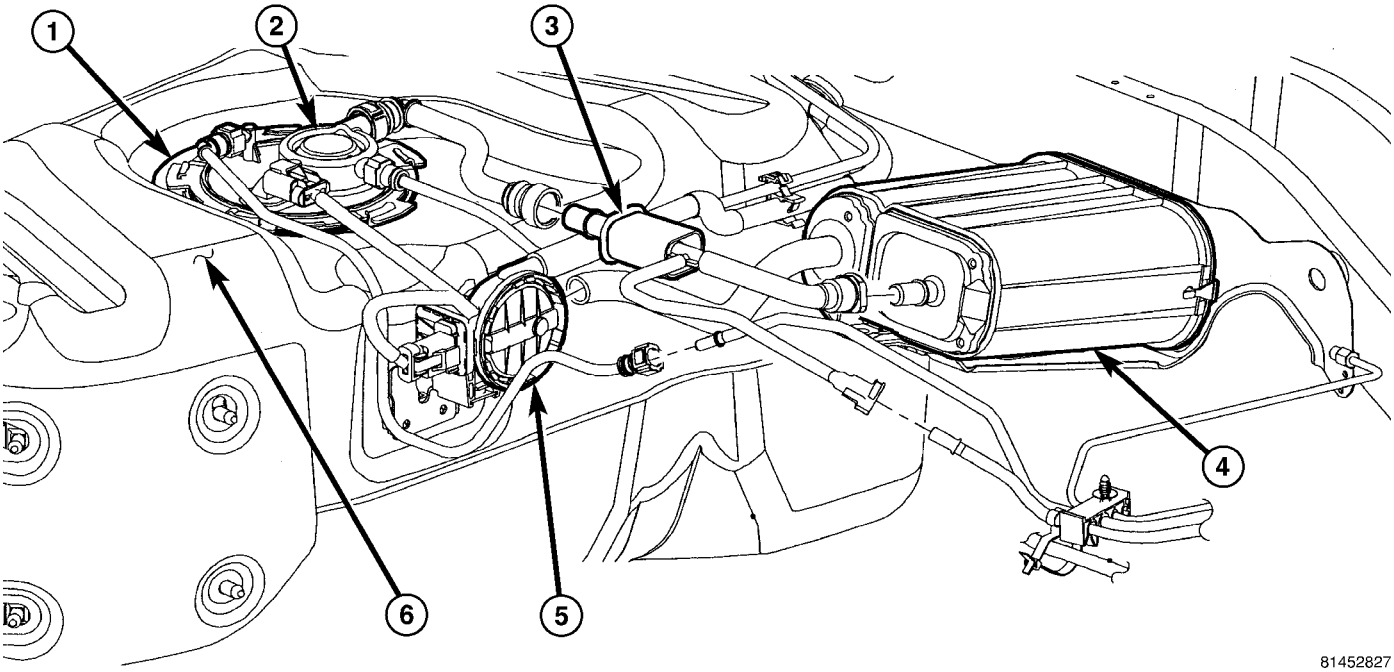

FUEL DELIVERY COMPONENTS

1 - FUEL PUMP MODULE LOCK RING
2 - FUEL PUMP MODULE
3 - ISOLATOR SLEEVE
4 - EVAP CANISTER
5 - NVLD PUMP
6 - FUEL TANK

FUEL DELIVERY - 2.4L/3.7L GAS (Continued)

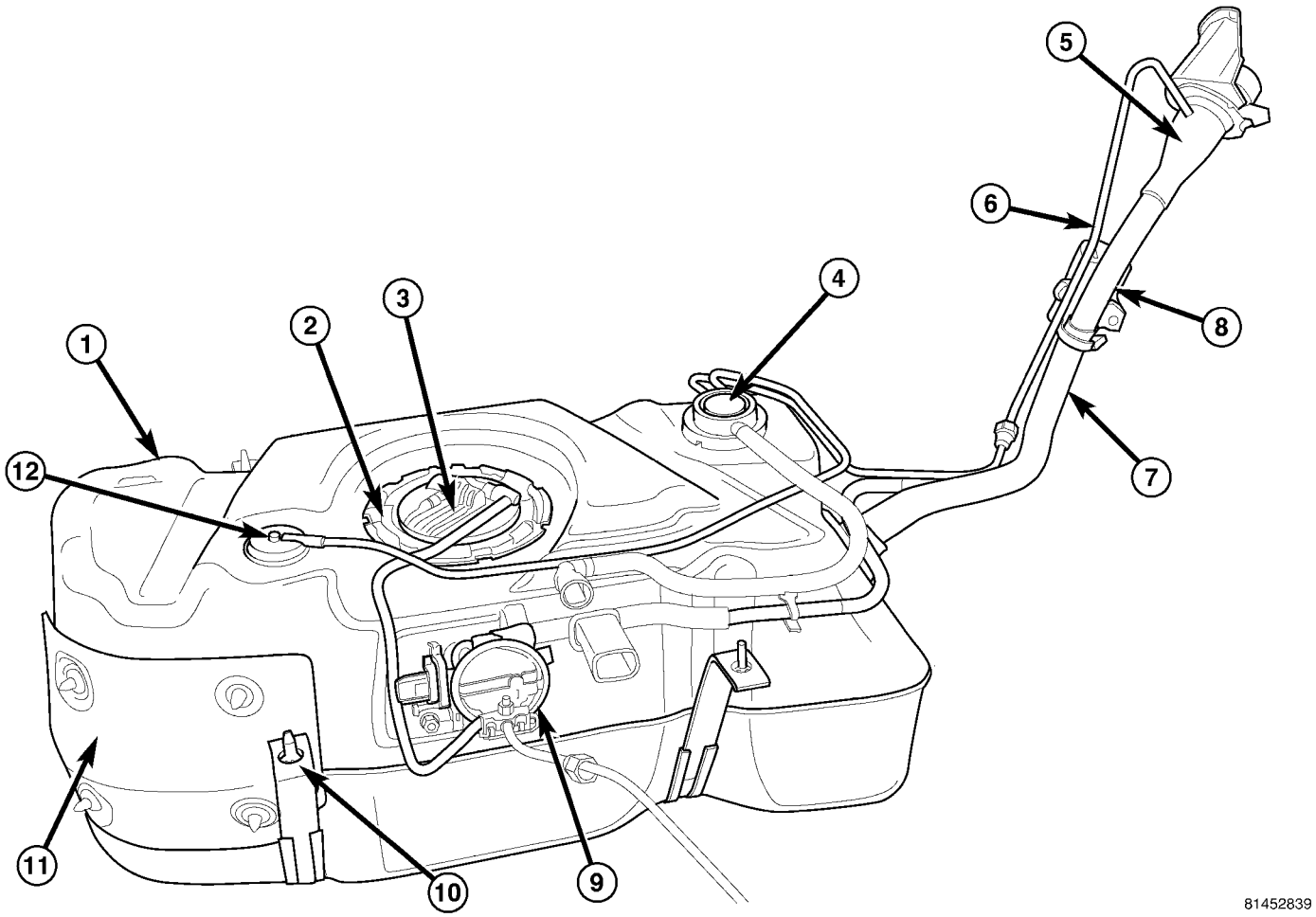

FUEL TANK VALVES

1 - FUEL TANK
2 - FUEL PUMP MODULE LOCK RING
3 - FUEL PUMP MODULE ASSEMBLY
4 - FLOW MANAGEMENT VALVE
5 - FUEL FILL TUBE
6 - FRESH AIR TUBE
7 - FUEL FILL HOSE
8 - FRESH AIR FILTER
9 - NVLD PUMP
10 - FUEL TANK STRAPS
11 - HEAT SHIELD
12 - CHECK (CONTROL) VALVE

CAUTION: Steps 1, 2, 3 and 4 must be performed to relieve high pressure fuel from within fuel rail. Do not attempt to use following steps to relieve this pressure as excessive fuel will be forced into a cylinder chamber.

(6) Unplug connector from any fuel injector.

(7) Attach one end of a jumper wire with alligator clips (18 gauge or smaller) to either injector terminal.

(8) Connect other end of jumper wire to positive side of battery.

(9) Connect one end of a second jumper wire to remaining injector terminal.

CAUTION: Powering an injector for more than a few seconds will permanently damage the injector.

(10) Momentarily touch other end of jumper wire to negative terminal of battery for no more than a few seconds.

(11) Place a rag or towel below fuel line quick-connect fitting at fuel rail.

(12) Disconnect quick-connect fitting at fuel rail. Refer to Quick-Connect Fittings.

(13) Return fuel pump relay to PDC.

(14) One or more Diagnostic Trouble Codes (DTC's) may have been stored in PCM memory due to fuel pump relay removal. The DRB® scan tool must be used to erase a DTC.

FUEL DELIVERY - 2.4L/3.7L GAS (Continued)

SPECIFICATIONS

FUEL SYSTEM PRESSURE

If equipped with JTEC Powertrain Control Module using 3 electrical connectors: 339 kPa +/- 34 kPa (49.2 psi +/- 5 psi).

If equipped with NGC Powertrain Control Module using 4 electrical connectors: 400 kPa +/- 34 kPa (58 psi +/- 5 psi).

TORQUE

DESCRIPTION	N-m	Ft. Lbs.	In. Lbs.
Accelerator Pedal Bracket Mounting Nuts	12	-	105
Crankshaft Position Sensor - 2.4L	28	21	-
Crankshaft Position Sensor - 3.7L	28	21	-
Camshaft Position Sensor - 2.4L	12	-	106
Camshaft Position Sensor - 3.7L	12	-	106
Engine Coolant Temperature Sensor	11	-	96
EVAP Canister-to-Body Bolts	48	35	-
EVAP Canister-to-Canis. Bracket Bolt/Nut	11	-	100
Fuel Filler Hose Clamp at Tank	3	-	30
Fuel Filler Housing-to-Body Screws	2	-	17
Fuel Pump Module Access Plate Nuts	3	-	26
Fuel Rail Mounting Bolts - 3.7L	11	-	100
Fuel Rail Mounting Bolts - 2.4L	28	-	250
Fuel Tank Heat Sheild Nuts	5.5	-	49
Fuel Tank Mounting Strap Bolts	61	45	-
Fuel Tank Skid Plate and Trailer Hitch	88	65	-
IAC Motor Mounting Screws	7	-	60
Leak Detection Pump Mounting Bracket-to-Fuel Tank Nuts	5.5	-	49
Leak Detection Pump-to-Bracket Nuts	1.2	-	11
Map Sensor Mounting Screws	3	-	25
PCM-to-Mounting Bracket Mounting Screws	4	-	35
Power Steering Pressure Switch	14-22	-	124-195
TPS Mounting Screws	7	-	60
Throttle Body Mounting Bolts	11	-	100
Oxygen Sensors	30	22	-

FUEL DELIVERY - 2.4L/3.7L GAS (Continued)

SPECIAL TOOLS

FUEL SYSTEM

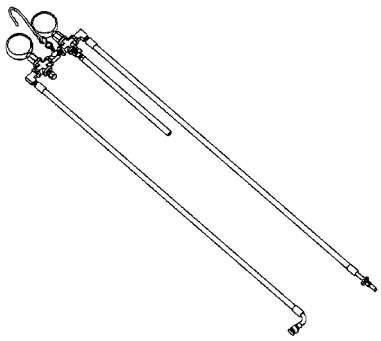

FUEL PRESSURE TESTER #8978

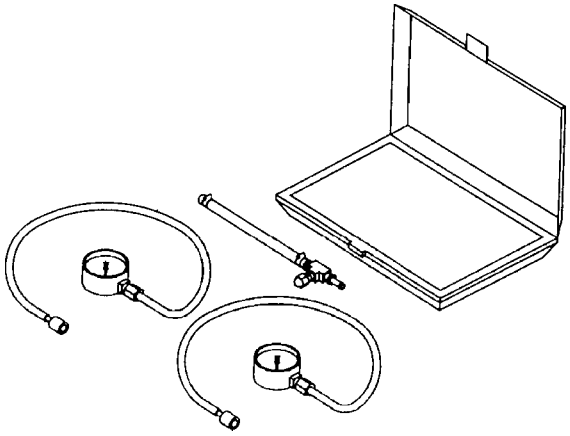

TEST KIT, FUEL PRESSURE—sh;50

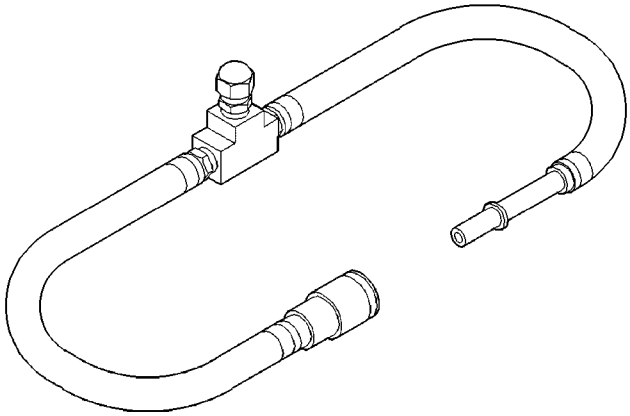

ADAPTERS, FUEL PRESSURE TEST

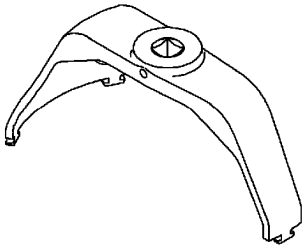

LOCKRING REMOVER/INSTALLER 9340

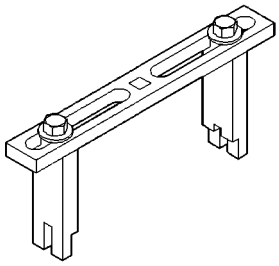

SPANNER WRENCH—6856

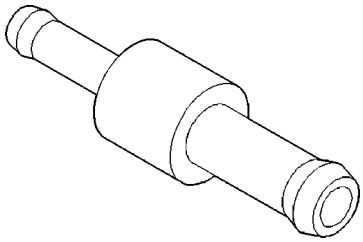

FITTING, AIR METERING - 6714

O2S (OXYGEN SENSOR) REMOVER/INSTALLER

FLOW MANAGEMENT VALVE

DESCRIPTION

The flow management valve is a part of the ORVR system. This plastic valve is placed inline between the fuel tank vent fitting and the EVAP canister. It is located on top of the fuel tank.

OPERATION

The flow management valve is one of the components used in the ORVR system. The valve meters the flow of fuel vapors to the EVAP canister during vehicle run and refueling. Pressure from the tank during refueling opens the main port valve and allows vapors to enter the EVAP canister. During vehicle run, the vapors are metered through an orifice to the EVAP canister. It is also used as a liquid separator to keep liquid fuel out of the EVAP canister.

FUEL FILTER

DESCRIPTION

The fuel filter and fuel pressure regulator are combined within the fuel pump module assembly. They are not serviceable.

FUEL LEVEL SENDING UNIT / SENSOR

DESCRIPTION

The fuel gauge sending unit (fuel level sensor) is attached to the fuel pump module. The sending unit consists of a float, an arm, and a variable resistor track (card).

OPERATION

The fuel pump module has 4 different circuits (wires). Two of these circuits are used for the fuel gauge sending unit for fuel gauge operation, and for certain OBD II emission requirements. The other 2 wires are used for electric fuel pump operation.

For Fuel Gauge Operation: A constant current source of approximately 32 milliamps is supplied to the resistor track on the fuel gauge sending unit. This is fed directly from the Powertrain Control Module (PCM). **NOTE: For diagnostic purposes, this 12V power source can only be verified with the circuit opened (fuel pump module electrical connector unplugged). With the connectors plugged, output voltages will vary from about 0.6 volts at FULL, to about 8.6 volts at EMPTY (about 8.6 volts at EMPTY for Jeep models, and about 7.0 volts at EMPTY for Dodge Truck models).** The resistor track is used to vary the voltage (resistance) depending on fuel tank float level. As fuel level increases, the float and arm move up, which decreases voltage. As fuel level decreases, the float and arm move down, which increases voltage. The varied voltage signal is returned back to the PCM through the sensor return circuit.

Both of the electrical circuits between the fuel gauge sending unit and the PCM are hard-wired (not multi-plexed). After the voltage signal is sent from the resistor track, and back to the PCM, the PCM will interpret the resistance (voltage) data and send a message across the multi-plex bus circuits to the instrument panel cluster. Here it is translated into the appropriate fuel gauge level reading. Refer to Instrument Panel for additional information.

For OBD II Emission Monitor Requirements: The PCM will monitor the voltage output sent from the resistor track on the sending unit to indicate fuel level. The purpose of this feature is to prevent the OBD II system from recording/setting false misfire and fuel system monitor diagnostic trouble codes. The feature is activated if the fuel level in the tank is less than approximately 15 percent of its rated capacity. If equipped with a Leak Detection Pump (EVAP system monitor), this feature will also be activated if the fuel level in the tank is more than approximately 85 percent of its rated capacity.

FUEL LINES

DESCRIPTION

Also refer to Quick-Connect Fittings.

WARNING: THE FUEL SYSTEM MAY BE UNDER A CONSTANT PRESSURE (EVEN WITH THE ENGINE OFF). BEFORE SERVICING ANY FUEL SYSTEM HOSES, FITTINGS, LINES, OR MOST COMPONENTS, FUEL SYSTEM PRESSURE MUST BE RELEASED. REFER TO THE FUEL SYSTEM PRESSURE RELEASE PROCEDURE.

The lines/tubes/hoses used on fuel injected vehicles are of a special construction. This is due to the higher fuel pressures and the possibility of contaminated fuel in this system. If it is necessary to replace these lines/tubes/hoses, only those marked EFM/EFI may be used.

If equipped: The hose clamps used to secure rubber hoses on fuel injected vehicles are of a special rolled edge construction. This construction is used to prevent the edge of the clamp from cutting into the hose. Only these rolled edge type clamps may be used in this system. All other types of clamps may cut into the hoses and cause high-pressure fuel leaks.

Use new original equipment type hose clamps.

QUICK CONNECT FITTING

DESCRIPTION

Different types of quick-connect fittings are used to attach the various fuel system components, lines and tubes. These are: a single-button type, a two-button type, a pinch type, a single-tab type, a two-tab type or a plastic retainer ring type. Some are equipped with safety latch clips. Some may require the use of a special tool for disconnection and removal. Refer to Quick-Connect Fittings Removal/Installation for more information.

CAUTION: Before separating a quick-connect fitting, pay attention to what type of fitting is being used by referring to Quick-Connect Fitting Removal. This will prevent unnecessary fitting or fitting latch breakage.

CAUTION: The interior components (o-rings, clips) of quick-connect fittings are not serviced separately, but new plastic spacers and latches are available for some types. If service parts are not available, do not attempt to repair the damaged fitting or fuel line (tube). If repair is necessary, replace the complete fuel line (tube) assembly.

STANDARD PROCEDURE - QUICK-CONNECT FITTINGS

Different types of quick-connect fittings are used to attach the various fuel system components, lines and tubes. These are: a single-button type, a two-button type, a pinch type, a single-tab type, a two-tab type or a plastic retainer ring type. Some are equipped with safety latch clips. Some may require the use of a special tool for disconnection and removal.

DISCONNECTING

WARNING: THE FUEL SYSTEM IS UNDER A CONSTANT PRESSURE (EVEN WITH ENGINE OFF). BEFORE SERVICING ANY FUEL SYSTEM HOSE, FITTING OR LINE, FUEL SYSTEM PRESSURE MUST BE RELEASED. REFER TO FUEL SYSTEM PRESSURE RELEASE PROCEDURE.

CAUTION: Before separating a quick-connect fitting, pay attention to what type of fitting is being used by referring to Quick-Connect Fitting Removal. This will prevent unnecessary fitting or fitting latch breakage.

CAUTION: The interior components (o-rings, clips) of quick-connect fittings are not serviced separately, but new plastic spacers and latches are available for some types. If service parts are not available, do not attempt to repair the damaged fitting or fuel line (tube). If repair is necessary, replace the complete fuel line (tube) assembly.

(1) Perform fuel pressure release procedure. Refer to Fuel Pressure Release Procedure.

(2) Disconnect negative battery cable from battery.

(3) Clean fitting of any foreign material before disassembly.

(4) **Single–Button Type Fitting:** This type of fitting is equipped with a single push-button located on the quick-connect fitting (Fig. 1). The push-button is attached to two internal latches (Fig. 2). To disconnect, press on button with your thumb and unlatch fitting from fuel line. Special tools are not required for disconnection. **DO NOT ATTEMPT TO PRY OR PULL UP ON PUSH-BUTTON. LATCHES WILL BE BROKEN.**

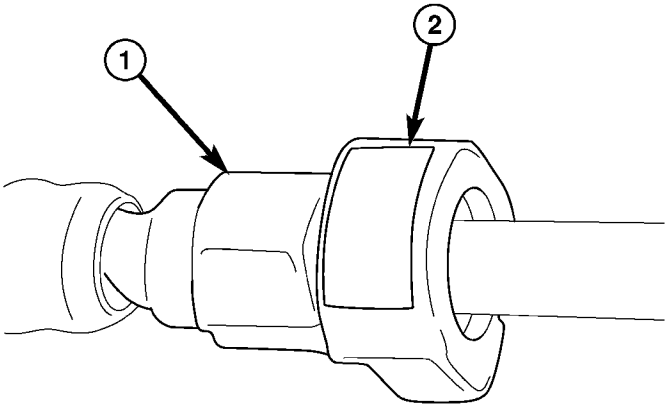

812bc64f

Fig. 1 SINGLE BUTTON FITTING

1 - QUICK-CONNECT FITTING
2 - SINGLE PUSH-BUTTON

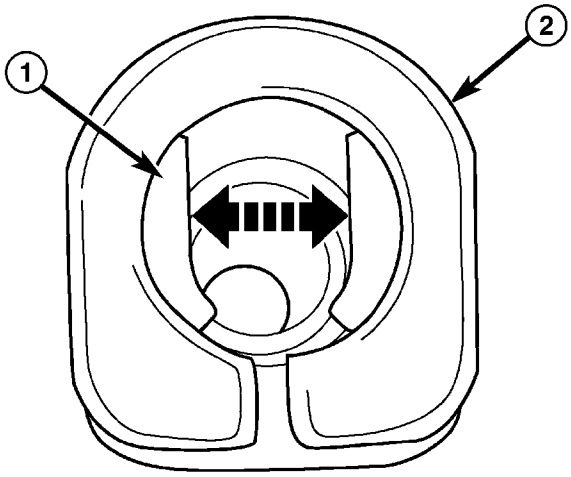

812bc655

Fig. 2 FITTING LATCHES

1 - LATCHES
2 - QUICK-CONNECT FITTING

QUICK CONNECT FITTING (Continued)

(5) **2–Button Type Fitting:** This type of fitting is equipped with a push-button located on each side of quick-connect fitting (Fig. 3). Press on both buttons simultaneously for removal. Special tools are not required for disconnection.

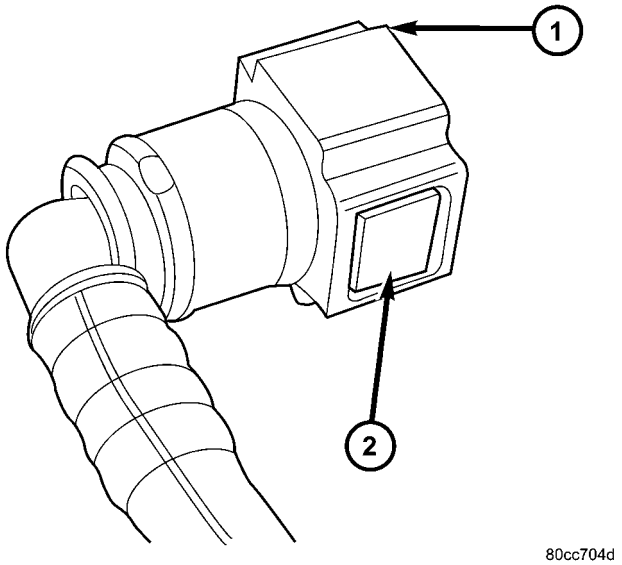

Fig. 3 2-BUTTON TYPE FITTING

1 - QUICK-CONNECT FITTING
2 - PUSH-BUTTONS (2)

(6) **Pinch-Type Fitting:** This fitting is equipped with two finger tabs. Pinch both tabs together while removing fitting (Fig. 4). Special tools are not required for disconnection.

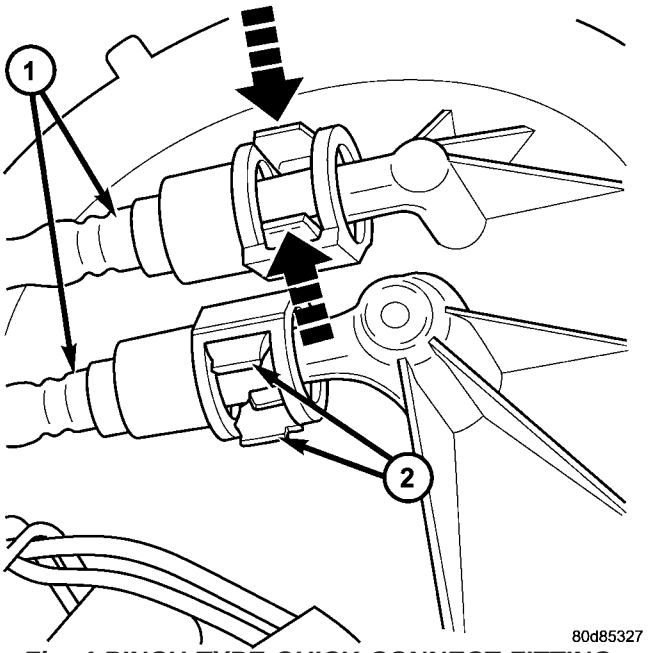

Fig. 4 PINCH TYPE QUICK-CONNECT FITTING

1 - QUICK-CONNECT FITTINGS
2 - PINCH TABS

(7) **Single-Tab Type Fitting:** This type of fitting is equipped with a single pull tab (Fig. 5). The tab is removable. After tab is removed, quick-connect fitting can be separated from fuel system component. Special tools are not required for disconnection.

(a) Press release tab on side of fitting to release pull tab (Fig. 6). **If release tab is not pressed prior to releasing pull tab, pull tab will be damaged.**

(b) While pressing release tab on side of fitting, use screwdriver to pry up pull tab (Fig. 6).

(c) Raise pull tab until it separates from quick-connect fitting (Fig. 7).

(8) **Two-Tab Type Fitting:** This type of fitting is equipped with tabs located on both sides of fitting (Fig. 8). The tabs are supplied for disconnecting quick-connect fitting from component being serviced.

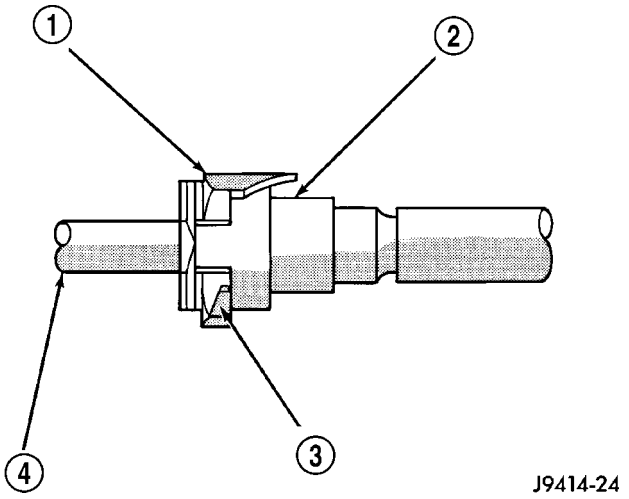

Fig. 5 SINGLE-TAB TYPE FITTING

1 - PULL TAB
2 - QUICK-CONNECT FITTING
3 - PRESS HERE TO REMOVE PULL TAB
4 - INSERTED TUBE END

(a) To disconnect quick-connect fitting, squeeze plastic retainer tabs (Fig. 8) against sides of quick-connect fitting with your fingers. Tool use is not required for removal and may damage plastic retainer.

(b) Pull fitting from fuel system component being serviced.

(c) The plastic retainer will remain on component being serviced after fitting is disconnected. The o-rings and spacer will remain in quick-connect fitting connector body.

QUICK CONNECT FITTING (Continued)

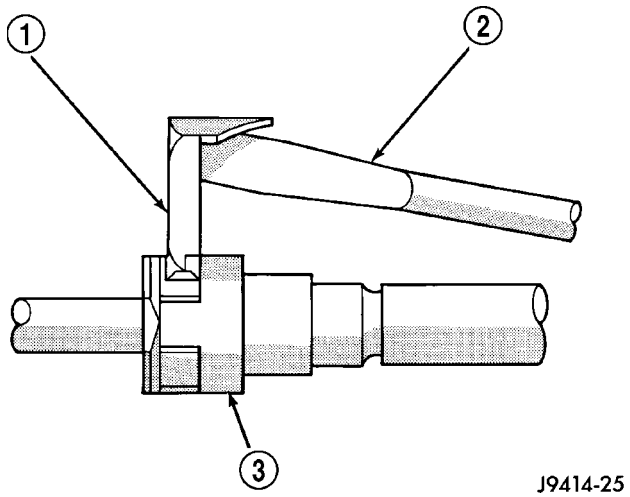

Fig. 6 DISCONNECTING SINGLE-TAB TYPE FITTING

1 - PULL TAB
2 - SCREWDRIVER
3 - QUICK-CONNECT FITTING

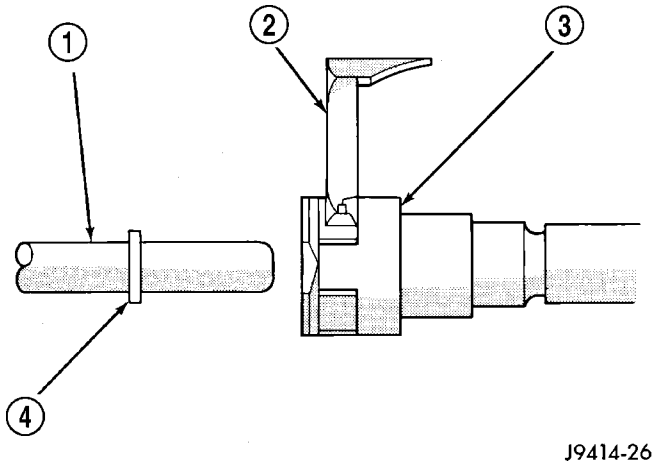

Fig. 7 REMOVING PULL TAB

1 - FUEL TUBE OR FUEL SYSTEM COMPONENT
2 - PULL TAB
3 - QUICK-CONNECT FITTING
4 - FUEL TUBE STOP

(9) **Plastic Retainer Ring Type Fitting:** This type of fitting can be identified by the use of a full-round plastic retainer ring (Fig. 9) usually black in color.

(a) To release fuel system component from quick-connect fitting, firmly push fitting towards component being serviced while firmly pushing plastic retainer ring into fitting (Fig. 9). With plastic ring depressed, pull fitting from component. **The plastic retainer ring must be pressed squarely into fitting body. If this retainer is cocked during removal, it may be difficult to disconnect fitting. Use an open-end wrench on shoulder of plastic retainer ring to aid in disconnection.**

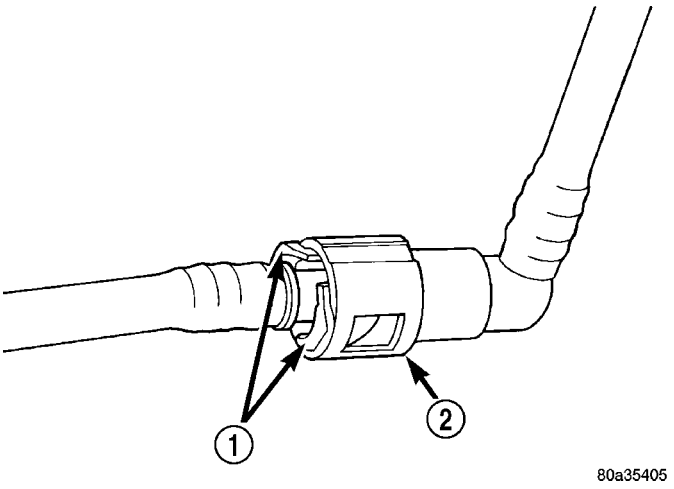

Fig. 8 TYPICAL 2–TAB TYPE FITTING

1 - TAB(S)
2 - QUICK-CONNECT FITTING

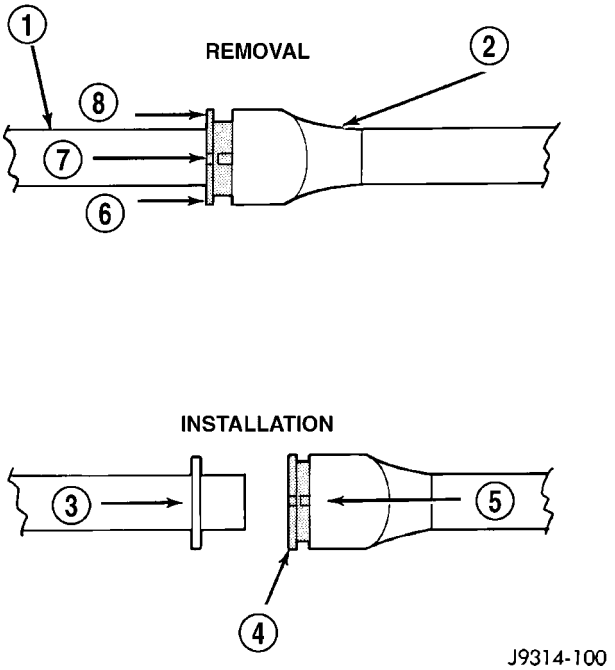

Fig. 9 PLASTIC RETAINER RING TYPE FITTING

1 - FUEL TUBE
2 - QUICK CONNECT FITTING
3 - PUSH
4 - PLASTIC RETAINER
5 - PUSH
6 - PUSH
7 - PUSH
8 - PUSH

QUICK CONNECT FITTING (Continued)

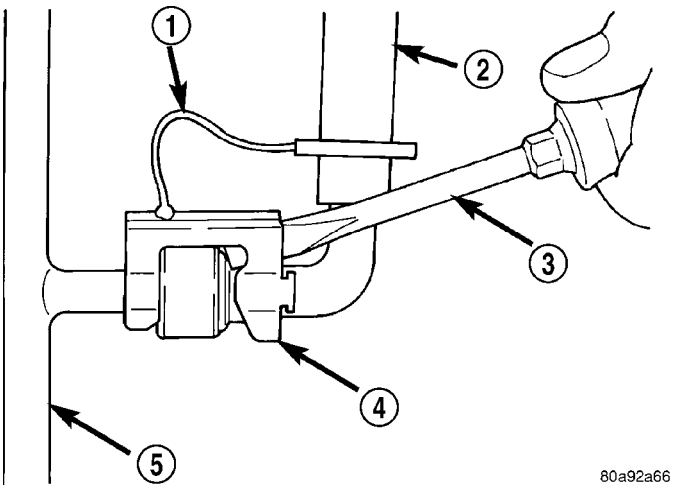

Fig. 10 LATCH CLIP-TYPE 1

1 - TETHER STRAP
2 - FUEL LINE
3 - SCREWDRIVER
4 - LATCH CLIP
5 - FUEL RAIL

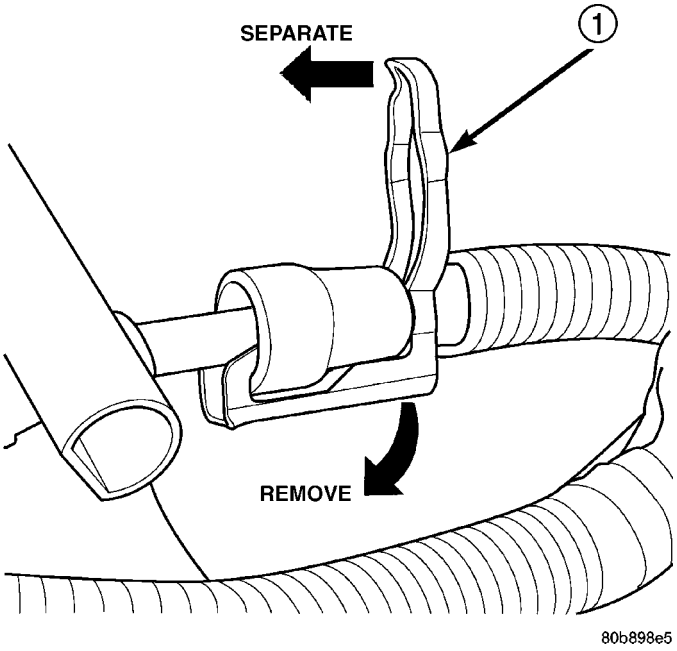

Fig. 11 LATCH CLIP-TYPE 2

1 - LATCH CLIP

(b) After disconnection, plastic retainer ring will remain with quick-connect fitting connector body.

(c) Inspect fitting connector body, plastic retainer ring and fuel system component for damage. Replace as necessary.

(10) **Latch Clips:** Depending on vehicle model and engine, 2 different types of safety latch clips are used (Fig. 10) or (Fig. 11). Type-1 is tethered to fuel line and type-2 is not. A special tool will be necessary to disconnect fuel line after latch clip is removed. The latch clip may be used on certain fuel line/fuel rail connection, or to join fuel lines together.

(a) Type 1: Pry up on latch clip with a screwdriver (Fig. 10).

(b) Type 2: Separate and unlatch 2 small arms on end of clip (Fig. 11) and swing away from fuel line.

(c) Slide latch clip toward fuel rail while lifting with screwdriver.

(d) Insert special fuel line removal tool (Snap-On number FIH 9055-1 or equivalent) into fuel line (Fig. 12). Use tool to release locking fingers in end of line.

(e) With special tool still inserted, pull fuel line from fuel rail.

(f) After disconnection, locking fingers will remain within quick-connect fitting at end of fuel line.

(11) Disconnect quick-connect fitting from fuel system component being serviced.

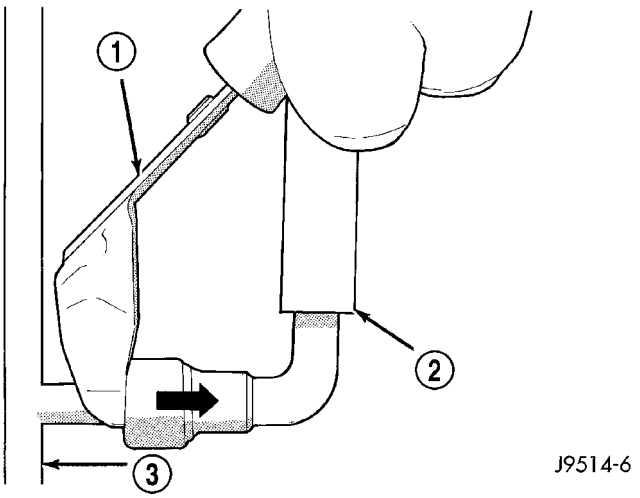

Fig. 12 FUEL LINE DISCONNECTION USING SPECIAL TOOL

1 - SPECIAL FUEL LINE TOOL
2 - FUEL LINE
3 - FUEL RAIL

CONNECTING

(1) Inspect quick-connect fitting body and fuel system component for damage. Replace as necessary.

(2) Prior to connecting quick-connect fitting to component being serviced, check condition of fitting and component. Clean parts with a lint-free cloth. Lubricate with clean engine oil.

(3) Insert quick-connect fitting into fuel tube or fuel system component until built-on stop on fuel tube or component rests against back of fitting.

(4) Continue pushing until a click is felt.

(5) Single-tab type fitting: Push new tab down until it locks into place in quick-connect fitting.

QUICK CONNECT FITTING (Continued)

(6) Verify a locked condition by firmly pulling on fuel tube and fitting (15-30 lbs.).

(7) Latch Clip Equipped: Install latch clip (snaps into position). **If safety latch clip will not fit, this indicates fuel line is not properly installed to fuel rail (or other fuel line). Recheck fuel line connection.**

(8) Connect negative cable to battery.

(9) Start engine and check for leaks.

FUEL PRESSURE REGULATOR

DESCRIPTION

The fuel pressure regulator is located on the top of the fuel pump module assembly (2) (Fig. 13), and is non-serviceable.

OPERATION

The fuel pressure regulator is a mechanical device that is not controlled by engine vacuum or the Powertrain Control Module (PCM).

JTEC Powertrain Control Module: The regulator is calibrated to maintain fuel system operating pressure of approximately 339 kPa +/- 34 kPa (49.2 psi +/- 5 psi) at the fuel injectors if equipped with a JTEC powertrain control module. **NGC powertrain control module:** The regulator is calibrated to maintain fuel system operating pressure of approximately 400 kPa +/- 34 kPa (58 psi +/- 2 psi) at the fuel injectors if equipped with an NGC powertrain control module. The regulator contains a diaphragm, calibrated springs and a fuel return valve.

Fuel Flow: Fuel migrates into the fuel pump module reservoir through a one-way check valve located on the bottom of the module. This check valve prevents the reservoir from running empty such as when going up or down hills with a low amount of fuel in the tank. If fuel pressure at the pressure regulator exceeds approximately 49 psi (JTEC module) or 58psi (NGC module), an internal diaphragm within the regulator closes, and excess fuel is routed through a second fitting on the main fuel filter, and back into the fuel tank (the fuel pressure regulator is installed into the return side of the system). Pressure regulated fuel is then delivered from the third fitting on the fuel filter, up to and through the fuel rail, and on to the fuel injectors.

The fuel pressure regulator also acts as a check valve to maintain some fuel pressure when the engine is not operating. This will help to start the engine. A second check valve is located at the outlet of the fuel pump module housing.

A separate fuel return line from the engine is not used with this system.

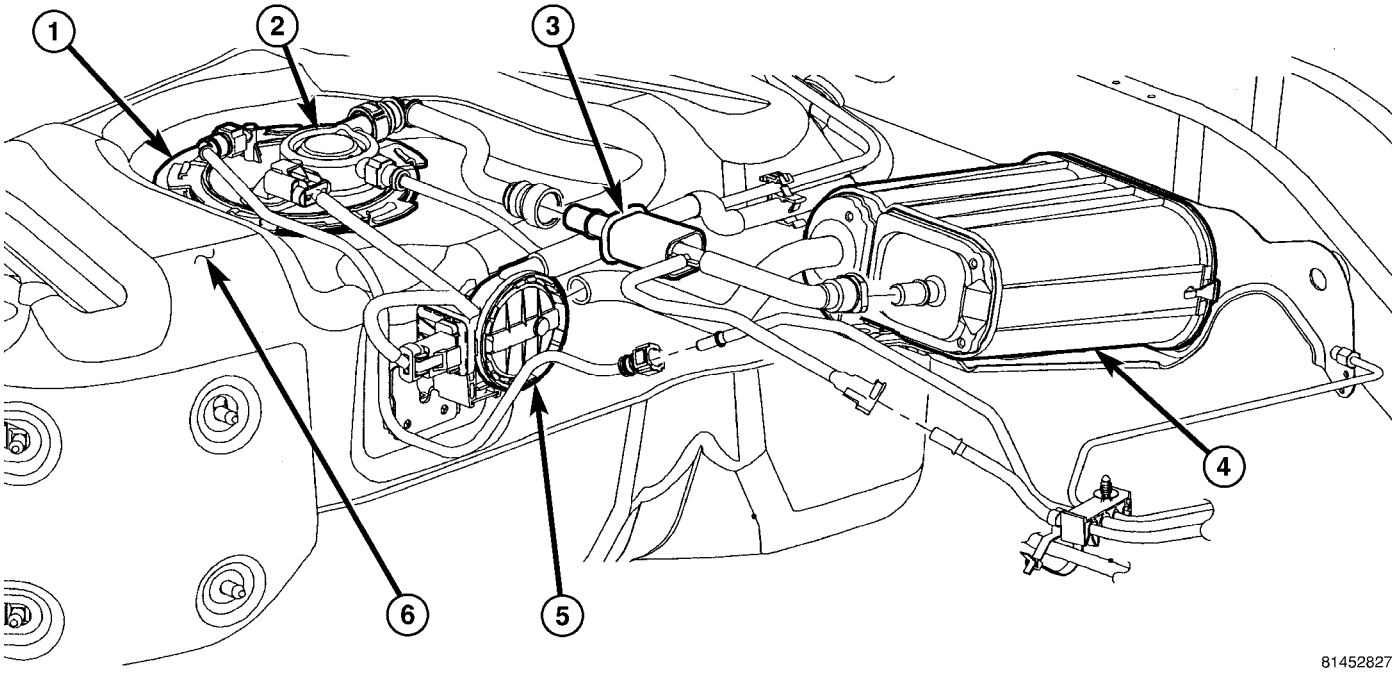

Fig. 13 FUEL DELIVERY COMPONENTS

1 - FUEL PUMP MODULE LOCK RING
2 - FUEL PUMP MODULE
3 - ISOLATOR SLEEVE
4 - EVAP CANISTER
5 - NVLD PUMP
6 - FUEL TANK

FUEL PUMP

DESCRIPTION

The electric fuel pump is located inside of the fuel pump module. A 12 volt, permanent magnet, electric motor powers the fuel pump. The electric fuel pump is not a separate, serviceable component.

OPERATION

Voltage to operate the electric pump is supplied through the fuel pump relay.

Fuel is drawn in through a filter at the bottom of the module and pushed through the electric motor gearset to the pump outlet.

Check Valve Operation: The fuel pump module contains a one-way check valve to prevent fuel flow back into the tank and to maintain fuel supply line pressure (engine warm) when pump is not operational. It is also used to keep the fuel supply line full of gasoline when pump is not operational. After the vehicle has cooled down, fuel pressure may drop to 0 psi (cold fluid contracts), but liquid gasoline will remain in fuel supply line between the check valve and fuel injectors. **Fuel pressure that has dropped to 0 psi on a cooled down vehicle (engine off) is a normal condition.**

The electric fuel pump is not a separate, serviceable component.

FUEL PUMP MODULE

DESCRIPTION

The fuel pump module assembly (2) is located on top of the fuel tank (Fig. 14). The complete assembly contains the following components:

- A fuel pressure regulator
- A built-in primary fuel filter
- A separate fuel pick-up, or inlet filter
- An electric fuel pump
- A lockring to retain pump module to tank
- A soft gasket between tank flange and module
- A fuel gauge sending unit (fuel level sensor)
- A fuel line connection

If the electrical fuel pump, primary inlet filter or fuel pressure regulator require service, the fuel pump module must be replaced.

OPERATION

Refer to Fuel Pump, Inlet Filter, Fuel Pressure Regulator and Fuel Gauge Sending Unit.

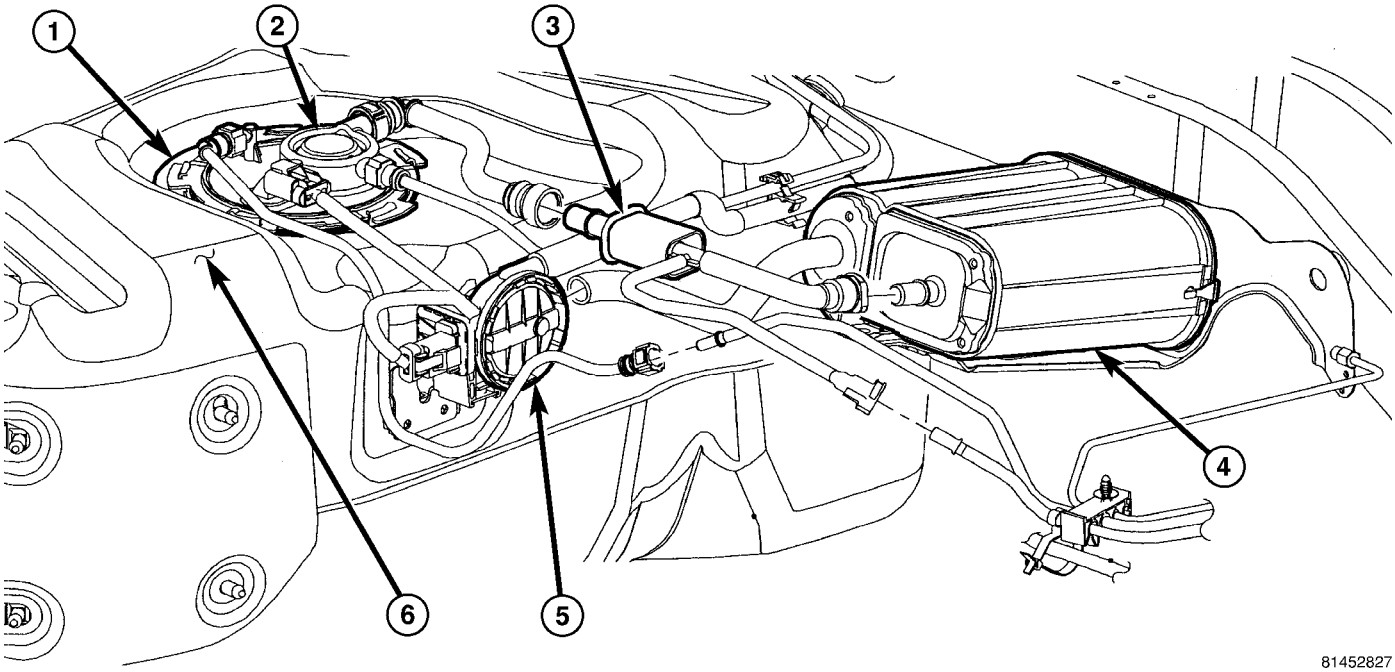

Fig. 14 FUEL DELIVERY COMPONENTS

1 - FUEL PUMP MODULE LOCK RING
2 - FUEL PUMP MODULE
3 - ISOLATOR SLEEVE
4 - EVAP CANISTER
5 - NVLD PUMP
6 - FUEL TANK

FUEL PUMP MODULE (Continued)

REMOVAL

WARNING: THE FUEL SYSTEM MAY BE UNDER A CONSTANT PRESSURE (EVEN WITH THE ENGINE OFF). BEFORE SERVICING THE FUEL PUMP MODULE, THE FUEL SYSTEM PRESSURE MUST BE RELEASED.

The fuel pump module (2) and pump module lock ring (1) (Fig. 15) are located on the top of the fuel tank.

A typical fuel pump module is displayed in the graphic.

(1) Drain and remove fuel tank. Refer to Fuel Tank Removal/Installation.

(2) Note rotational position of module before attempting removal. An indexing arrow is located on top of module for this purpose.

(3) Position Special Tool 9340 (3) (Fig. 16) into notches on outside edge of lockring (5).

(4) Install 1/2 inch drive breaker bar (1) to tool 9340 (3).

(5) Rotate breaker bar counter-clockwise to remove lockring (5).

(6) Remove lockring. The module will spring up slightly when lockring is removed.

(7) Remove module from fuel tank. Be careful not to bend float arm while removing.

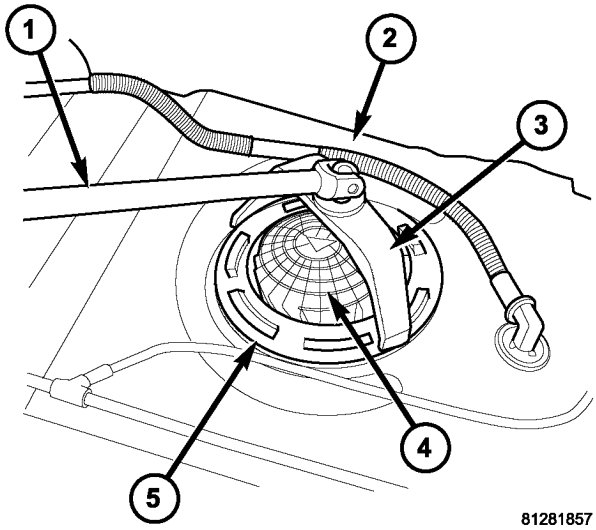

Fig. 16 FUEL PUMP MODULE LOCATION

1 - 1/2 Inch Breaker Bar
2 - Top of Fuel Tank (Typical)
3 - Special Tool #9340
4 - Fuel Pump Module
5 - Lockring

INSTALLATION

A typical fuel pump module is displayed in the graphic.

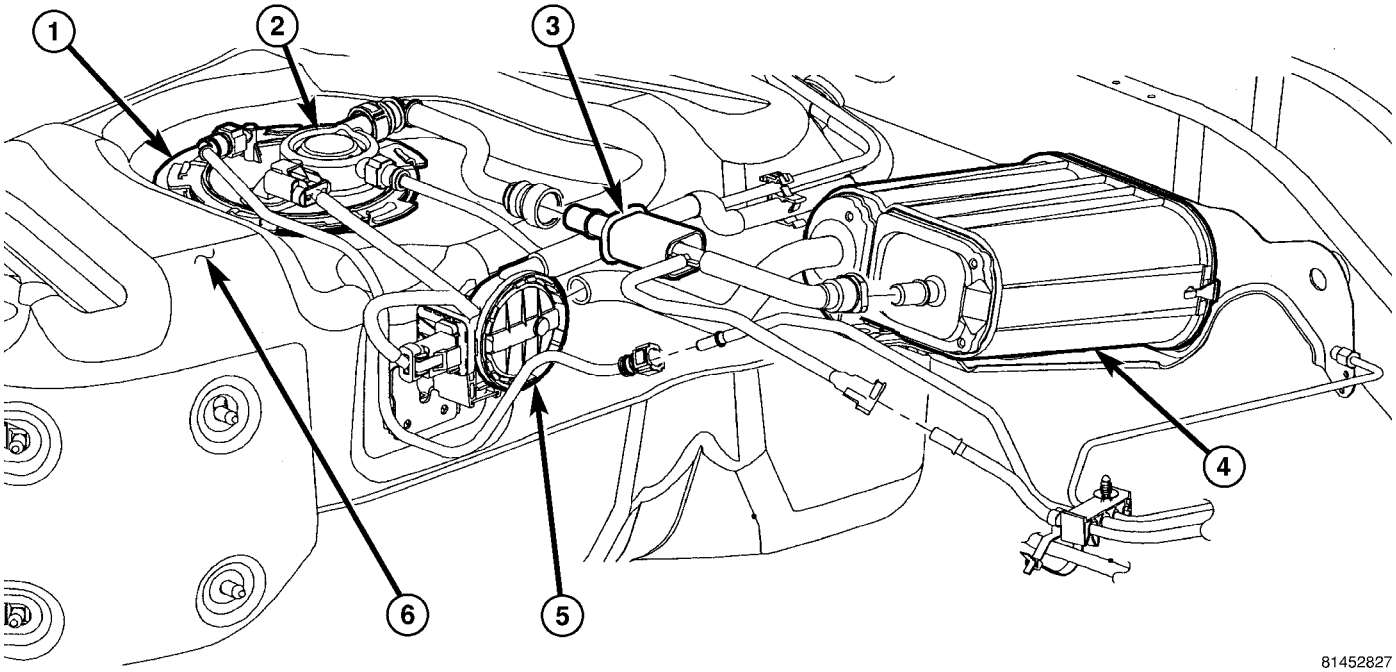

Fig. 15 FUEL DELIVERY COMPONENTS

1 - FUEL PUMP MODULE LOCK RING
2 - FUEL PUMP MODULE
3 - ISOLATOR SLEEVE
4 - EVAP CANISTER
5 - NVLD PUMP
6 - FUEL TANK

FUEL PUMP MODULE (Continued)

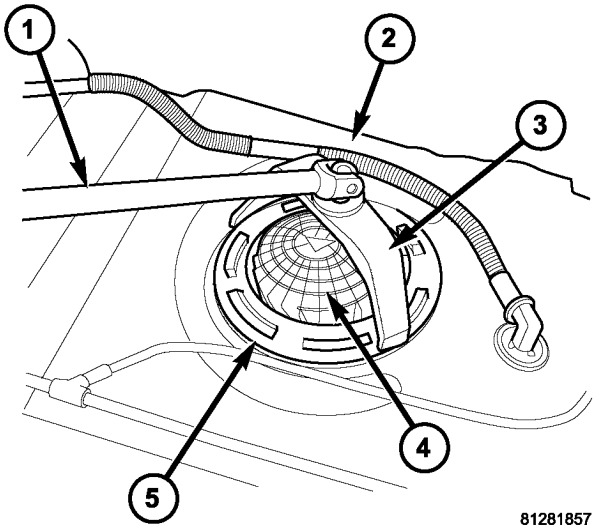

Fig. 17 FUEL PUMP MODULE LOCATION

1 - 1/2 Inch Breaker Bar
2 - Top of Fuel Tank (Typical)
3 - Special Tool #9340
4 - Fuel Pump Module
5 - Lockring

(1) Using a new seal (gasket), position fuel pump module into opening in fuel tank.

(2) Position lockring (5) (Fig. 17) over top of fuel pump module.

(3) Rotate module until embossed alignment arrow points to center alignment mark. This step must be performed to prevent float from contacting side of fuel tank.

(4) Install Special Tool 9340 (3) (Fig. 17) to lockring.

(5) Install 1/2 inch drive breaker (1) into Special Tool 9340 (3).

(6) Tighten lockring (clockwise) until all seven notches have engaged.

(7) Install fuel tank. Refer to Fuel Tank Removal/ Installation.

FUEL RAIL

DESCRIPTION

2.4L

The fuel injector rail is used to mount the fuel injectors to the engine (Fig. 18). On the 2.4L 4-cylinder engine, a **fuel damper** is located near the front of the fuel rail (Fig. 18).

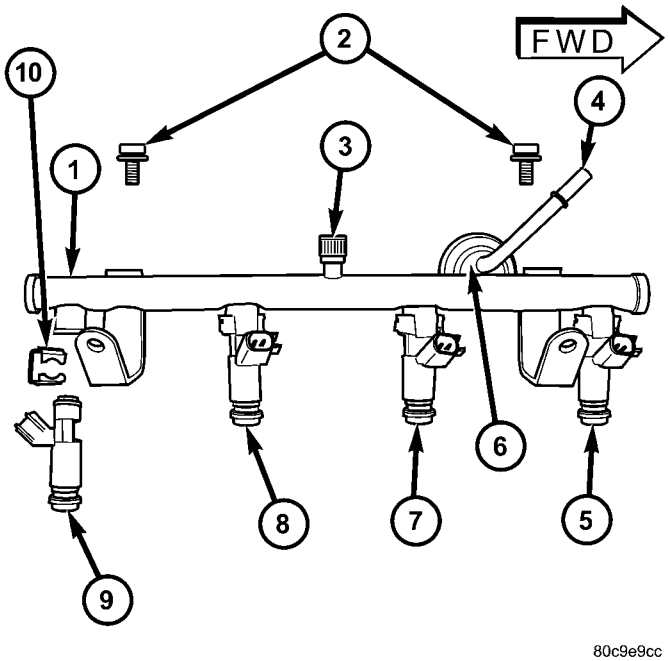

Fig. 18 FUEL RAIL - 2.4L

1 - FUEL RAIL
2 - MOUNTING BOLTS
3 - TEST PORT
4 - QUICK-CONNECT FITTING
5 - INJ. #1
6 - DAMPER
7 - INJ #2
8 - INJ #3
9 - INJ #4
10- INJECTOR RETAINING CLIP

3.7L

The fuel injector rail is mounted to the intake manifold (Fig. 19). It is used to mount the fuel injectors to the engine. The rail is equipped with a test port (Fig. 20) to check/test fuel system pressure.

A fuel rail mounted, fuel damper is not used with this engine.

OPERATION

2.4L

The fuel injector rail supplies the necessary fuel to each individual fuel injector.

The fuel damper is used only to help control fuel pressure pulsations. These pulsations are the result of the firing of the fuel injectors. It is **not used** as a fuel pressure regulator. The fuel pressure regulator is **not mounted** to the fuel rail on any engine. It is located on the fuel tank mounted fuel pump module. Refer to Fuel Pressure Regulator for additional information.

The fuel rail is not repairable.

A quick-connect fitting with a safety latch is used to attach the fuel line to the fuel rail.

FUEL RAIL (Continued)

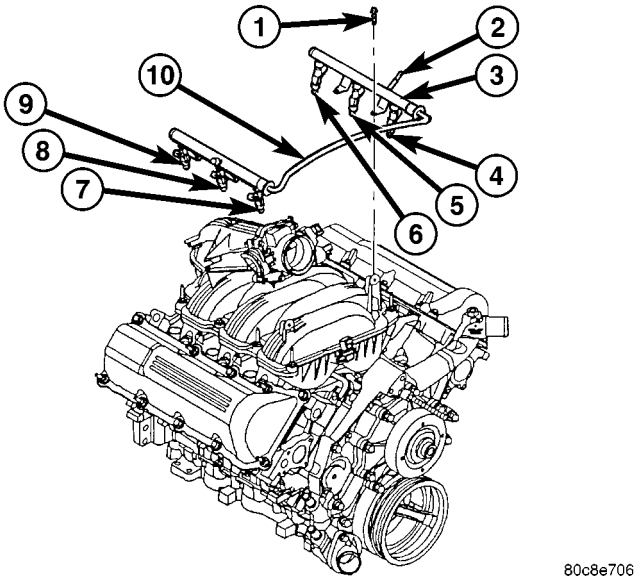

Fig. 19 FUEL RAIL - 3.7L

1 - MOUNTING BOLTS (4)
2 - QUICK-CONNECT FITTING
3 - FUEL RAIL
4 - INJ. #1
5 - INJ. #3
6 - INJ. #5
7 - INJ. #2
8 - INJ. #4
9 - INJ. #6
10 - CONNECTOR TUBE

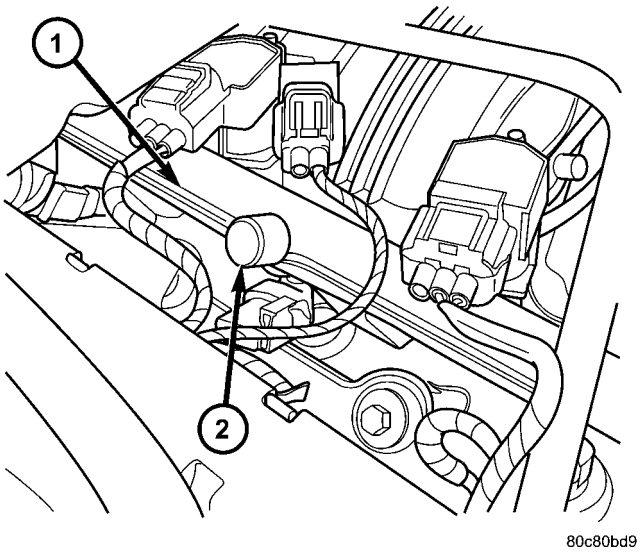

Fig. 20 FUEL RAIL TEST PORT - 3.7L

1 - FUEL RAIL
2 - TEST PORT

3.7L

High pressure fuel from the fuel pump is routed to the fuel rail. The fuel rail then supplies the necessary fuel to each individual fuel injector.

A quick-connect fitting with a safety latch is used to attach the fuel line to the fuel rail.

The fuel rail is not repairable.

REMOVAL

2.4L

WARNING: THE FUEL SYSTEM IS UNDER CONSTANT PRESSURE EVEN WITH ENGINE OFF. BEFORE SERVICING FUEL RAIL, FUEL SYSTEM PRESSURE MUST BE RELEASED.

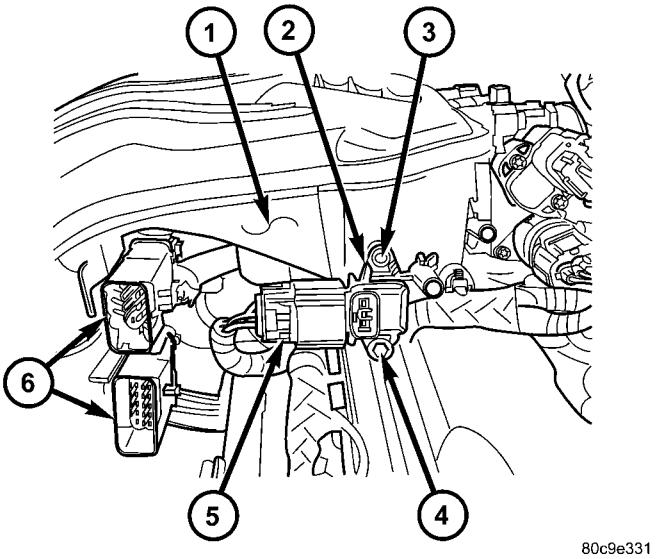

Fig. 21 MAP SENSOR LOCATION - 2.4L

1 - REAR OF INTAKE MANIFOLD
2 - MAP SENSOR
3 - ALIGNMENT PIN
4 - MOUNTING BOLT (TORX)
5 - ELECTRICAL CONNECTOR
6 - MAIN ENGINE HARNESS CONNECTORS

The fuel rail can be removed without removing the intake manifold if the following procedures are followed.

(1) Remove fuel tank filler tube cap.

(2) Perform Fuel System Pressure Release Procedure.

(3) Remove negative battery cable at battery.

(4) Remove air duct at throttle body.

(5) Disconnect fuel line latch clip and fuel line at fuel rail. A special tool will be necessary for fuel line disconnection. Refer to Quick-Connect Fittings.

(6) Remove necessary vacuum lines at throttle body.

(7) Drain engine coolant and remove thermostat and thermostat housing.

(8) Remove PCV hose and valve at valve cover.

FUEL RAIL (Continued)

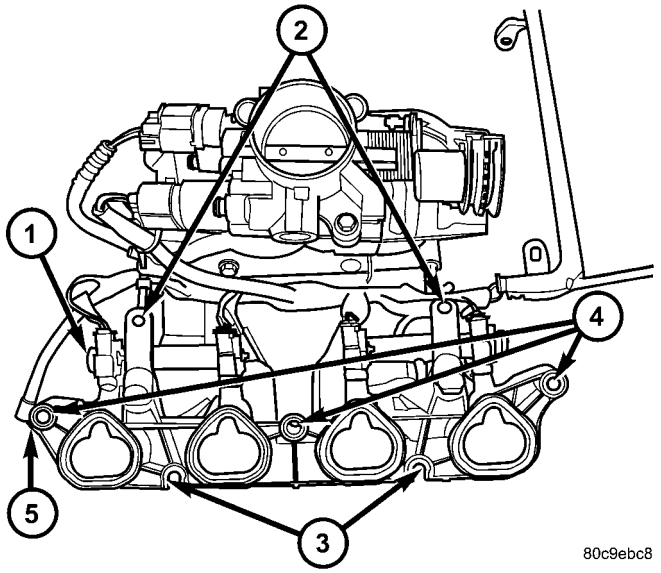

Fig. 22 FUEL RAIL MOUNTING - 2.4L

1 - FUEL RAIL
2 - INJECTION HARNESS CLIPS
3 - LOWER MOUNTING HOLES
4 - UPPER MOUNTING HOLES
5 - INTAKE MANIFOLD

(9) Remove 3 upper intake manifold mounting bolts (Fig. 22), but only loosen 2 lower bolts about 2 turns.

(10) Disconnect 2 main engine harness connectors at rear of intake manifold (Fig. 21).

(11) Disconnect 2 injection wiring harness clips at harness mounting bracket (Fig. 22).

(12) Disconnect electrical connectors at all 4 fuel injectors. To remove connector refer to (Fig. 24). Push red colored slider away from injector (1). While pushing slider, depress tab (2) and remove connector (3) from injector. The factory fuel injection wiring harness is numerically tagged (INJ 1, INJ 2, etc.) for injector position identification. If harness is not tagged, note wiring location before removal.

(13) Remove 2 injection rail mounting bolts (Fig. 18).

(14) Gently rock and pull fuel rail until fuel injectors just start to clear machined holes in intake manifold.

(15) Remove fuel rail (with injectors attached) from intake manifold.

(16) If fuel injectors are to be removed, refer to Fuel Injector Removal/Installation.

3.7L

WARNING: THE FUEL SYSTEM IS UNDER CONSTANT PRESSURE EVEN WITH ENGINE OFF. BEFORE SERVICING FUEL RAIL, FUEL SYSTEM PRESSURE MUST BE RELEASED.

CAUTION: The left and right fuel rails are replaced as an assembly. Do not attempt to separate rail halves at connector tube (Fig. 23). Due to design of tube, it does not use any clamps. Never attempt to install a clamping device of any kind to tube. When removing fuel rail assembly for any reason, be careful not to bend or kink tube.

(1) Remove fuel tank filler tube cap.

(2) Perform Fuel System Pressure Release Procedure.

(3) Remove negative battery cable at battery.

(4) Remove air duct at throttle body air box.

(5) Remove air box at throttle body.

(6) Disconnect fuel line latch clip and fuel line at fuel rail. A special tool will be necessary for fuel line disconnection. Refer to Quick-Connect Fittings.

(7) Remove necessary vacuum lines at throttle body.

(8) Disconnect electrical connectors at all 6 fuel injectors. To remove connector refer to (Fig. 24). Push red colored slider away from injector (1). While pushing slider, depress tab (2) and remove connector (3) from injector. The factory fuel injection wiring harness is numerically tagged (INJ 1, INJ 2, etc.) for injector position identification. If harness is not tagged, note wiring location before removal.

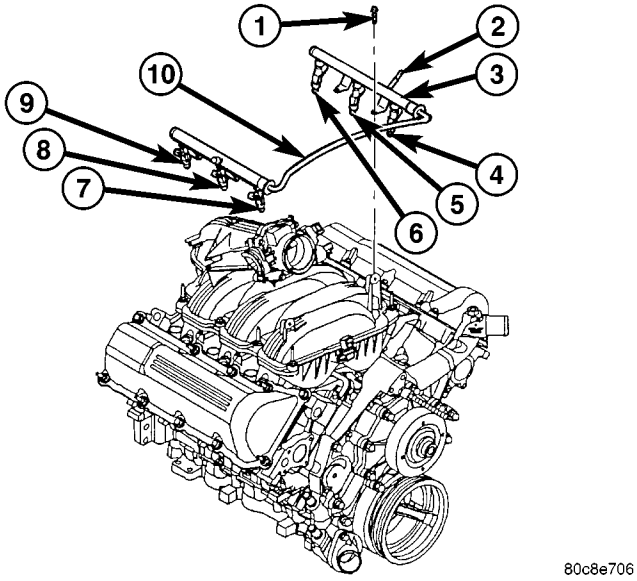

Fig. 23 FUEL RAIL REMOVE/INSTALL - 3.7L

1 - MOUNTING BOLTS (4)
2 - QUICK-CONNECT FITTING
3 - FUEL RAIL
4 - INJ. #1
5 - INJ. #3
6 - INJ. #5
7 - INJ. #2
8 - INJ. #4
9 - INJ. #6
10 - CONNECTOR TUBE

FUEL RAIL (Continued)

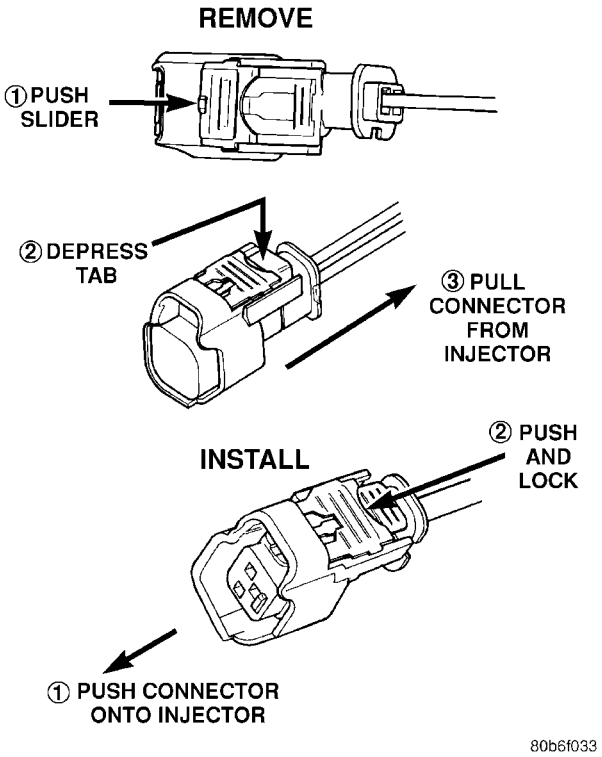

Fig. 24 REMOVE/INSTALL INJECTOR CONNECTOR

(9) Disconnect electrical connectors at throttle body sensors.

(10) Remove 6 ignition coils. Refer to Ignition Coil Removal/Installation.

(11) Remove 4 fuel rail mounting bolts (Fig. 23).

(12) Gently rock and pull **left** side of fuel rail until fuel injectors just start to clear machined holes in cylinder head. Gently rock and pull **right** side of rail until injectors just start to clear cylinder head holes. Repeat this procedure (left/right) until all injectors have cleared cylinder head holes.

(13) Remove fuel rail (with injectors attached) from engine.

(14) If fuel injectors are to be removed, refer to Fuel Injector Removal/Installation.

INSTALLATION

2.4L Engine

(1) If fuel injectors are to be installed, refer to Fuel Injector Removal/Installation.

(2) Clean out fuel injector machined bores in intake manifold.

(3) Apply a small amount of engine oil to each fuel injector o-ring. This will help in fuel rail installation.

(4) Position fuel rail/fuel injector assembly to machined injector openings in intake manifold.

(5) Guide each injector into cylinder head. Be careful not to tear injector o-rings.

(6) Push fuel rail down until fuel injectors have bottomed on shoulders.

(7) Install 2 fuel rail mounting bolts and tighten. Refer to torque specifications.

(8) Connect electrical connectors at all fuel injectors. To install connector, refer to (Fig. 24). Push connector onto injector (1) and then push and lock red colored slider (2). Verify connector is locked to injector by lightly tugging on connector.

(9) Snap 2 injection wiring harness clips (Fig. 22) into brackets.

(10) Connect 2 main engine harness connectors at rear of intake manifold (Fig. 21).

(11) Tighten 5 intake manifold mounting bolts. Refer to Engine Torque Specifications.

(12) Install PCV valve and hose.

(13) Install thermostat and radiator hose. Fill with coolant. Refer to Cooling.

(14) Connect necessary vacuum lines to throttle body.

(15) Connect fuel line latch clip and fuel line to fuel rail. Refer to Quick-Connect Fittings.

(16) Install air duct to throttle body.

(17) Connect battery cable to battery.

(18) Start engine and check for leaks.

3.7L Engine

(1) If fuel injectors are to be installed, refer to Fuel Injector Removal/Installation.

(2) Clean out fuel injector machined bores in intake manifold.

(3) Apply a small amount of engine oil to each fuel injector o-ring. This will help in fuel rail installation.

(4) Position fuel rail/fuel injector assembly to machined injector openings in cylinder head.

(5) Guide each injector into cylinder head. Be careful not to tear injector o-rings.

(6) Push **right** side of fuel rail down until fuel injectors have bottomed on cylinder head shoulder. Push **left** fuel rail down until injectors have bottomed on cylinder head shoulder.

(7) Install 4 fuel rail mounting bolts and tighten. Refer to torque specifications.

(8) Install 6 ignition coils. Refer to Ignition Coil Removal/Installation.

(9) Connect electrical connectors to throttle body.

(10) Connect electrical connectors at all fuel injectors. To install connector, refer to (Fig. 24). Push connector onto injector (1) and then push and lock red colored slider (2). Verify connector is locked to injector by lightly tugging on connector.

(11) Connect necessary vacuum lines to throttle body.

(12) Connect fuel line latch clip and fuel line to fuel rail. Refer to Quick-Connect Fittings.

(13) Install air box to throttle body.

(14) Install air duct to air box.

(15) Connect battery cable to battery.

(16) Start engine and check for leaks.

FUEL TANK

DESCRIPTION

The fuel tank is constructed of a plastic material. Its main functions are for fuel storage and for placement of the fuel pump module, and certain ORVR components.

OPERATION

All models pass a full 360 degree rollover test without fuel leakage. To accomplish this, fuel and vapor flow controls are required for all fuel tank connections.

An evaporation control system is connected to the fuel tank to reduce emissions of fuel vapors into the atmosphere. When fuel evaporates from the fuel tank, vapors pass through vent hoses or tubes to a charcoal canister where they are temporarily held. When the engine is running, the vapors are drawn into the intake manifold. Certain models are also equipped with a self-diagnosing system using either an NVLD pump , or a Leak Detection Pump (LDP) and/or an ORVR system. Refer to Emission Control System for additional information.

REMOVAL

Fuel Tank Draining

WARNING: THE FUEL SYSTEM MAY BE UNDER CONSTANT FUEL PRESSURE EVEN WITH THE ENGINE OFF. THIS PRESSURE MUST BE RELEASED BEFORE SERVICING FUEL TANK.

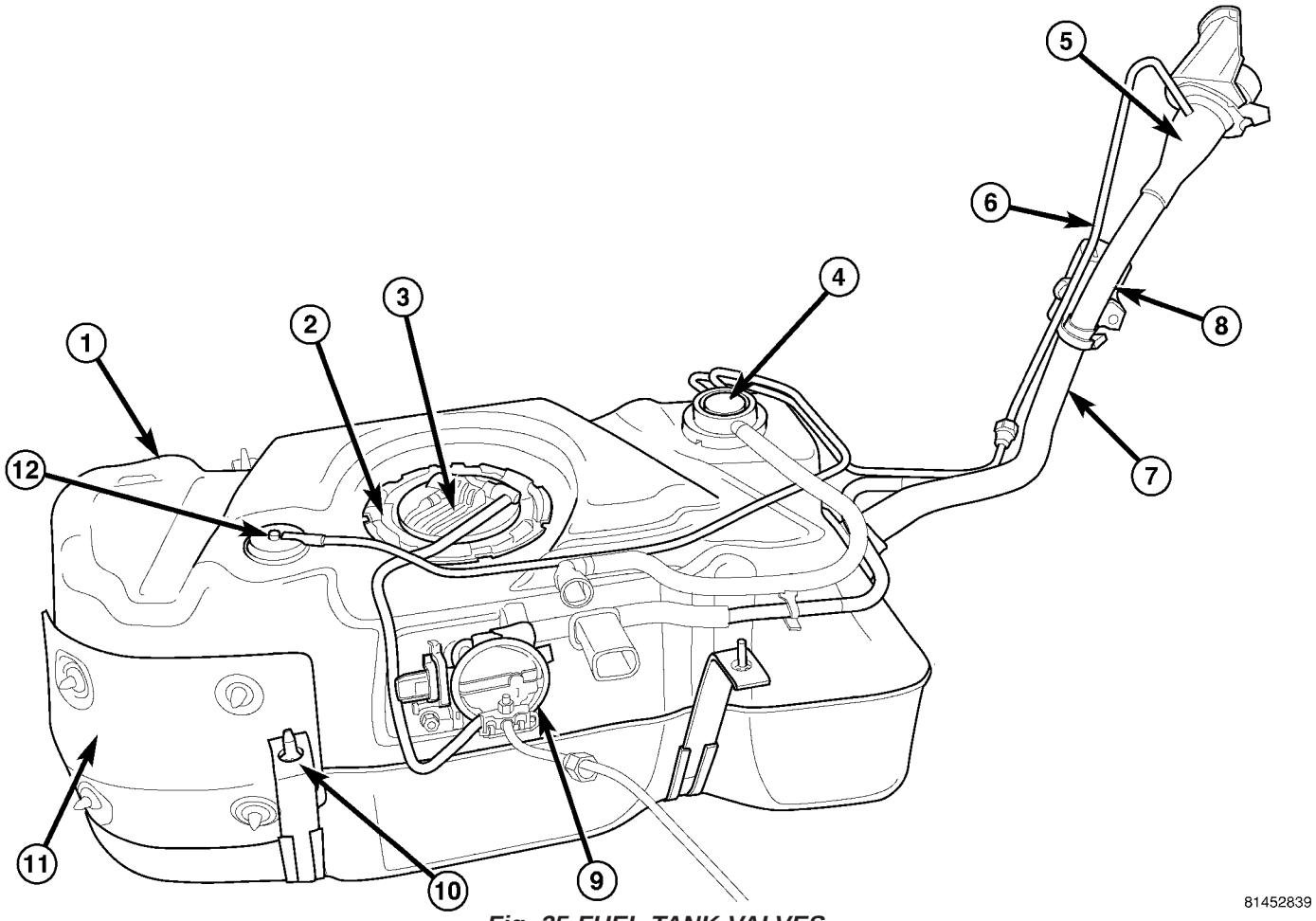

Fig. 25 FUEL TANK VALVES

1 - FUEL TANK
2 - FUEL PUMP MODULE LOCK RING
3 - FUEL PUMP MODULE ASSEMBLY
4 - FLOW MANAGEMENT VALVE
5 - FUEL FILL TUBE
6 - FRESH AIR TUBE
7 - FUEL FILL HOSE
8 - FRESH AIR FILTER
9 - NVLD PUMP
10 - FUEL TANK STRAPS
11 - HEAT SHIELD
12 - CHECK (CONTROL) VALVE

FUEL TANK (Continued)

Two different procedures may be used to drain fuel tank: through the fuel fill fitting on tank, or using a scan tool.

The quickest draining procedure involves removing the rubber fuel fill hose (7) (Fig. 25) from fuel tank fitting.

As an alternative procedure, the electric fuel pump may be activated allowing tank to be drained at fuel rail connection. Refer to DRB scan tool for fuel pump activation procedures. Before disconnecting fuel line at fuel rail, release fuel pressure. Refer to the Fuel System Pressure Release Procedure for procedures. Attach end of special test hose tool number 6541, 6539, 6631 or 6923 at fuel rail disconnection (tool number will depend on model and/or engine application). Position opposite end of this hose tool to an approved gasoline draining station. Activate fuel pump and drain tank until empty.

If electric fuel pump is not operating, fuel must be drained through fuel fill fitting at tank. Refer to following procedures.

(1) Release fuel system pressure.
(2) Raise vehicle.
(3) If equipped, remove fuel tank skid plate.

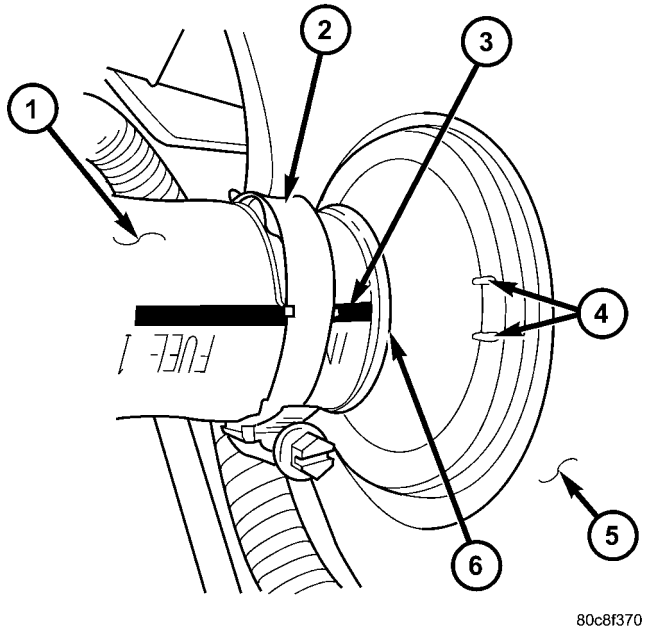

Fig. 26 FUEL FILL HOSE AT TANK

1 - FUEL FILL HOSE AT TANK
2 - HOSE CLAMP
3 - WHITE PAINTED INDEX MARK
4 - ALIGNMENT NOTCHES
5 - LEFT SIDE OF FUEL TANK
6 - FUEL FILL FITTING

(4) Thoroughly clean area around fuel fill fitting (6) (Fig. 26) and rubber fuel fill hose (1) at side of fuel tank. After cleaning, loosen fuel fill hose clamp (2) at tank.

(5) Before removing rubber hose (1) (Fig. 26) from fitting, note hose orientation while referring to marks (3) and (4).

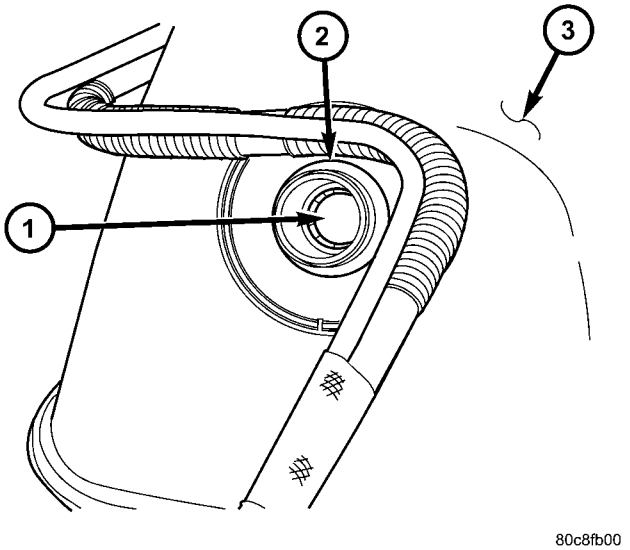

Fig. 27 FUEL FILL CHECK VALVE

1 - ONE-WAY CHECK VALVE
2 - FUEL FILL FITTING
3 - SIDE OF FUEL TANK

(6) Disconnect rubber fuel fill hose at fuel tank fitting (2) (Fig. 27). Using an approved gas holding tank, drain fuel tank through this fitting.

FUEL TANK (Continued)

Tank Removal

(1) If equipped, remove fuel tank skid plate and tow hooks. Certain equipment packages will also require removal of the trailer hitch. Refer to Tow Hooks, Trailer Hitch or Skid Plate in 23, Body for removal/installation procedures.

(2) Disconnect and separate fresh air tube (6) (Fig. 28) quick-connect fitting.

(3) Disconnect air tubes at front of NVLD pump (9) (Fig. 28).

(4) Disconnect NVLD pump (9) (Fig. 28) electrical connector.

(5) Disconnect fuel pump module electrical connector jumper. This is located near front of fuel tank.

(6) Support tank with a hydraulic jack.

(7) Remove 4 fuel tank strap bolts (10) (Fig. 28) (2 at front of tank; 2 at rear of tank), and remove both tank support straps.

(8) Carefully lower tank a few inches.

(9) Continue lowering tank while guiding remaining hoses and lines through plastic isolator sleeve (3) (Fig. 29).

(10) If fuel tank is to be replaced, remove NVLD pump and fuel pump module from tank. Refer to Fuel Pump Module Removal/Installation procedures.

INSTALLATION

(1) If fuel tank is to be replaced, install NVLD pump and fuel pump module to tank. Refer to Fuel Pump Module Removal/Installation procedures.

(2) Position fuel tank to hydraulic jack.

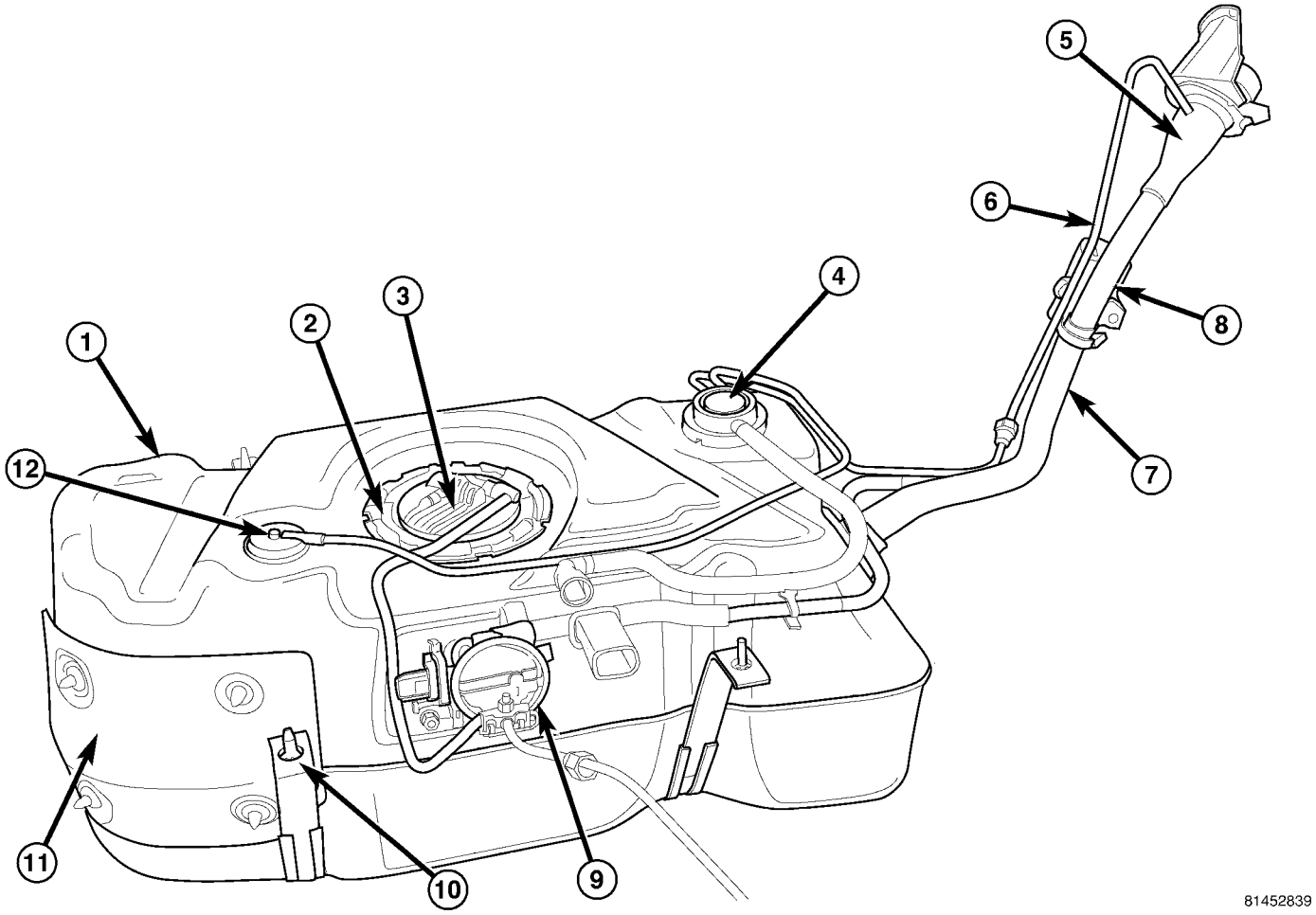

Fig. 28 FUEL TANK VALVES

1 - FUEL TANK
2 - FUEL PUMP MODULE LOCK RING
3 - FUEL PUMP MODULE ASSEMBLY
4 - FLOW MANAGEMENT VALVE
5 - FUEL FILL TUBE
6 - FRESH AIR TUBE
7 - FUEL FILL HOSE
8 - FRESH AIR FILTER
9 - NVLD PUMP
10 - FUEL TANK STRAPS
11 - HEAT SHIELD
12 - CHECK (CONTROL) VALVE

FUEL TANK (Continued)

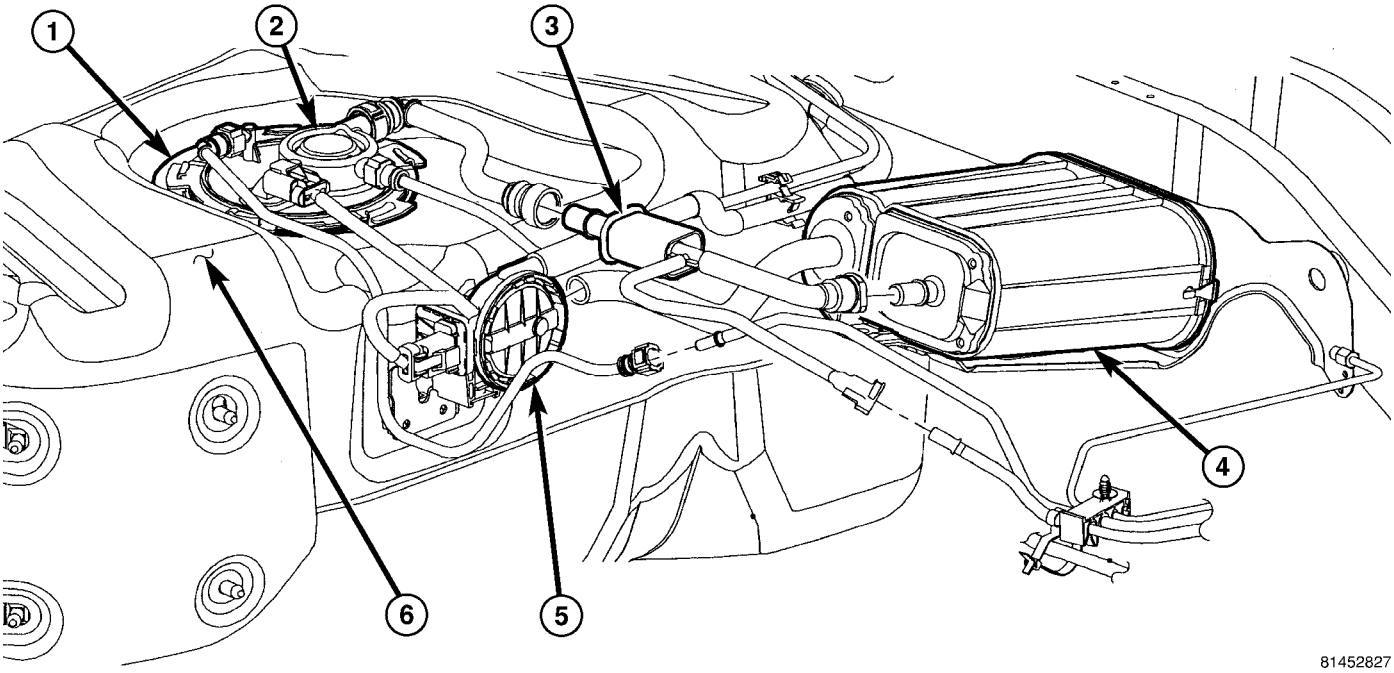

Fig. 29 FUEL DELIVERY COMPONENTS

1 - FUEL PUMP MODULE LOCK RING
2 - FUEL PUMP MODULE
3 - ISOLATOR SLEEVE
4 - EVAP CANISTER
5 - NVLD PUMP
6 - FUEL TANK

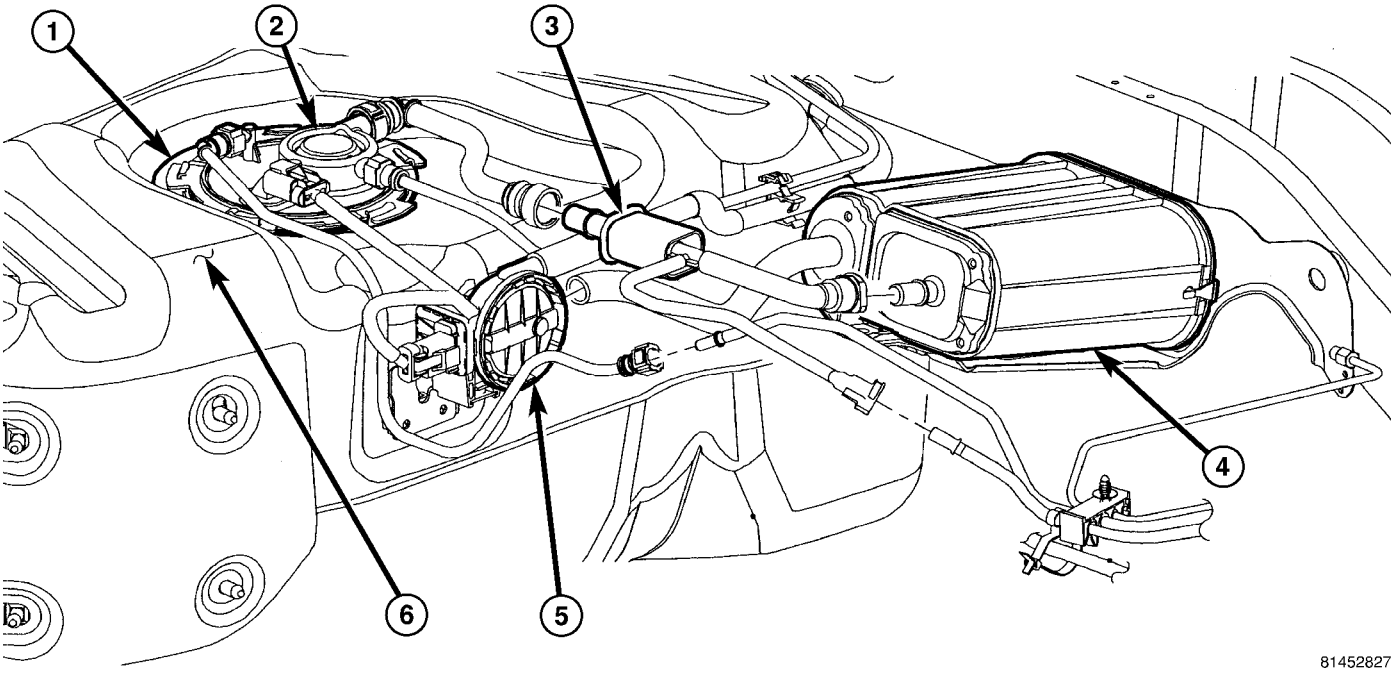

Fig. 30 FUEL DELIVERY COMPONENTS

1 - FUEL PUMP MODULE LOCK RING
2 - FUEL PUMP MODULE
3 - ISOLATOR SLEEVE
4 - EVAP CANISTER
5 - NVLD PUMP
6 - FUEL TANK

(3) Raise tank while carefully guiding vent tubes/hoses through isolator sleeve (3) (Fig. 30) and cross-member.

(4) Continue raising tank until positioned to body.

FUEL TANK (Continued)

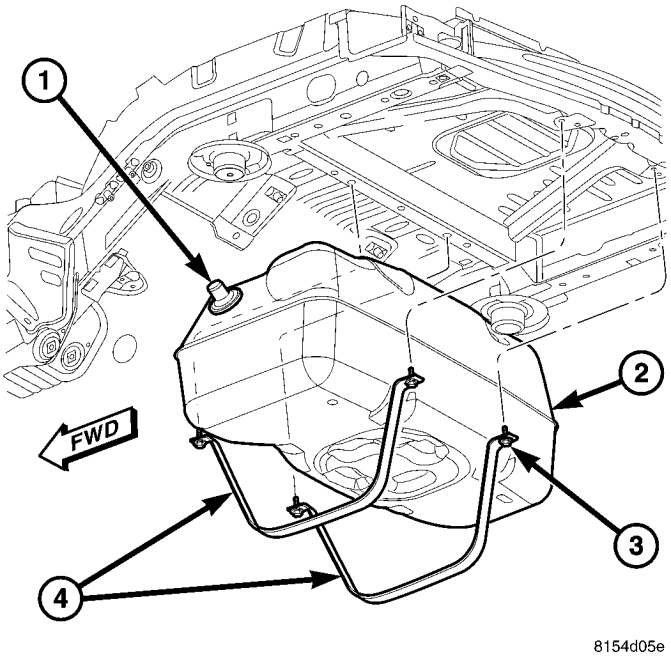

Fig. 31 FUEL TANK MOUNTING

1 - FILL FITTING
2 - FUEL TANK
3 - TANK MOUNTING BOLTS
4 - TANK MOUNTING STRAPS

(5) Attach two fuel tank mounting straps (4) (Fig. 31) and four mounting bolts (3). Tighten bolts to 61 N·m (45 ft. lbs.) torque.

(6) Connect electrical connector to NVLD pump (9) (Fig. 32).

(7) Connect fresh air (6) and recirculation lines to fuel fill tube.

(8) Connect electrical connector to fuel pump module.

(9) Connect fuel line quick-connect fitting.

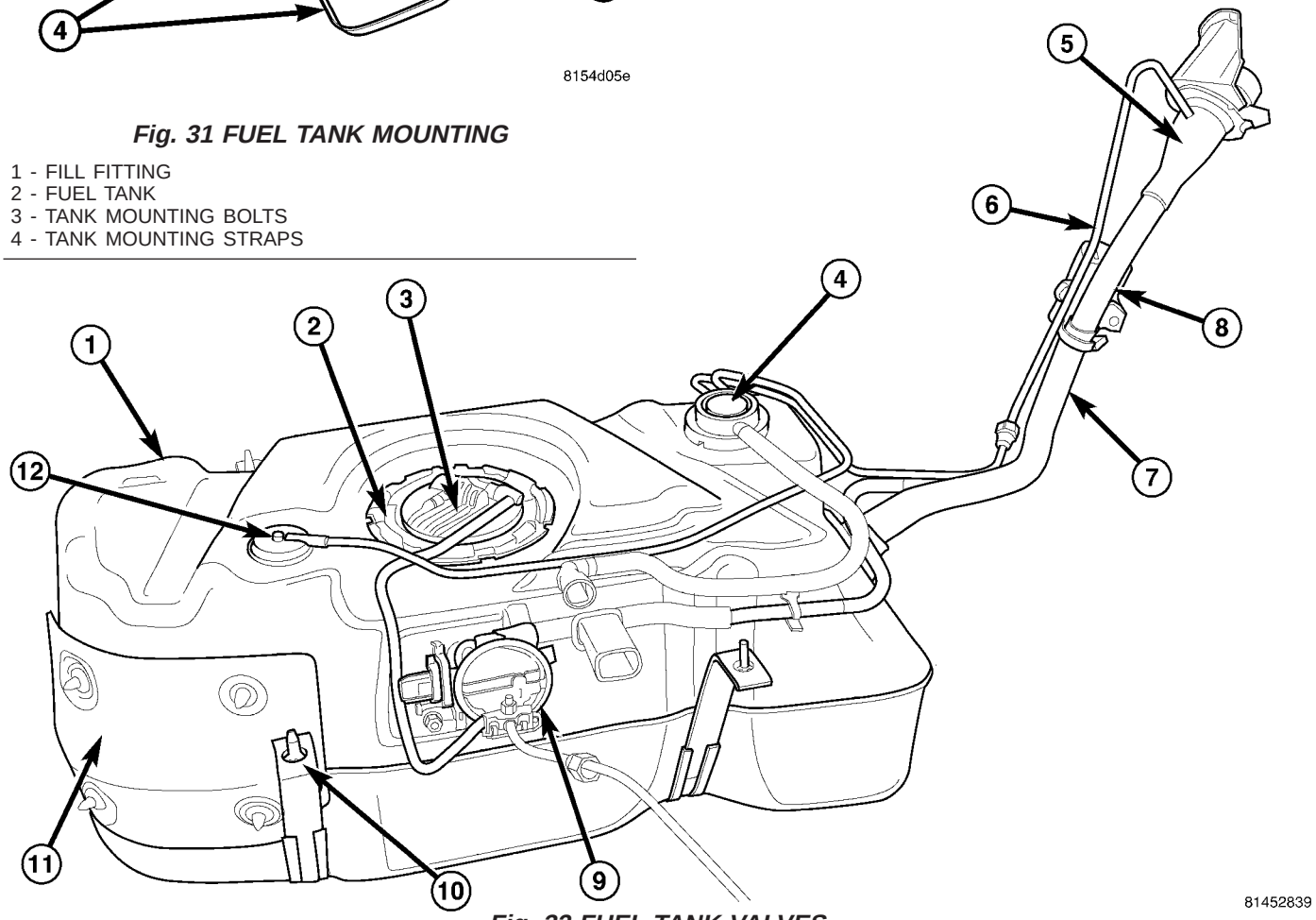

Fig. 32 FUEL TANK VALVES

1 - FUEL TANK
2 - FUEL PUMP MODULE LOCK RING
3 - FUEL PUMP MODULE ASSEMBLY
4 - FLOW MANAGEMENT VALVE
5 - FUEL FILL TUBE
6 - FRESH AIR TUBE
7 - FUEL FILL HOSE
8 - FRESH AIR FILTER
9 - NVLD PUMP
10 - FUEL TANK STRAPS
11 - HEAT SHIELD
12 - CHECK (CONTROL) VALVE

FUEL TANK (Continued)

(10) Install fuel fill hose and hose clamp to fuel tank fitting. Rotate hose until white painted index mark (3) on hose (Fig. 33) is located between alignment notches (4) on fuel tank fitting. Tighten clamp to 3.4 N·m (30 in. lbs.) torque.

(11) If equipped, install fuel tank skid plate, trailer hitch and tow hooks. Refer to Tow Hooks, Trailer Hitch or Skid Plate in 23, Body for removal/installation procedures.

(12) Lower vehicle.

(13) Connect negative battery cable to battery.

(14) Fill fuel tank with fuel.

(15) Start engine and check for fuel leaks.

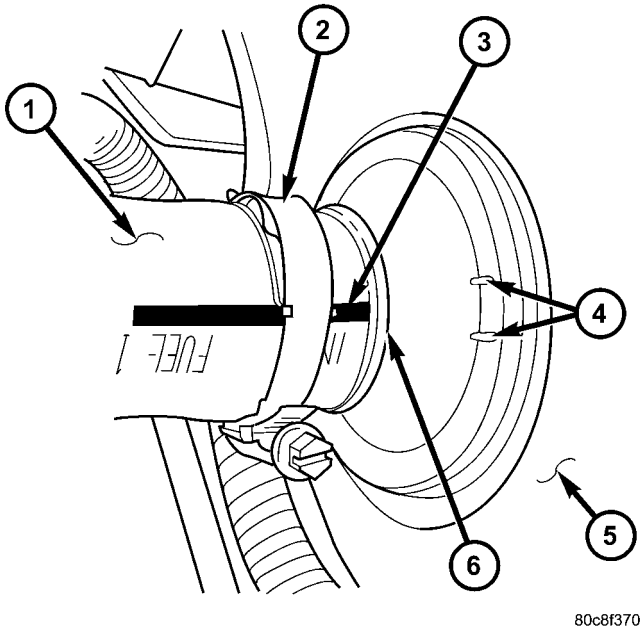

Fig. 33 FUEL FILL HOSE AT TANK

1 - FUEL FILL HOSE AT TANK
2 - HOSE CLAMP
3 - WHITE PAINTED INDEX MARK
4 - ALIGNMENT NOTCHES
5 - LEFT SIDE OF FUEL TANK
6 - FUEL FILL FITTING

FUEL INJECTION - 2.4L/3.7L GAS

TABLE OF CONTENTS

	page
FUEL INJECTION - 2.4L/3.7L GAS	
DESCRIPTION	24
ACCELERATOR PEDAL	
REMOVAL	25
INSTALLATION	25
CRANKSHAFT POSITION SENSOR	
DESCRIPTION	25
OPERATION	26
REMOVAL	27
INSTALLATION	27
FUEL INJECTOR	
DESCRIPTION	28
OPERATION	
OPERATION - FUEL INJECTOR	28
OPERATION - PCM OUTPUT	28
REMOVAL	29
INSTALLATION	29
FUEL PUMP RELAY	
DESCRIPTION	29
OPERATION	29
REMOVAL	29
INSTALLATION	29
IDLE AIR CONTROL MOTOR	
DESCRIPTION	30
OPERATION	30
REMOVAL	31
INSTALLATION	31
INTAKE AIR TEMPERATURE SENSOR	
DESCRIPTION	31
OPERATION	31
REMOVAL	32
INSTALLATION	33
MAP SENSOR	
DESCRIPTION	33
OPERATION	33
REMOVAL	34
INSTALLATION	35
OXYGEN SENSOR	
DESCRIPTION	35
OPERATION	35
REMOVAL	36
INSTALLATION	38
THROTTLE BODY	
DESCRIPTION	38
OPERATION	38
REMOVAL	38
INSTALLATION	39
THROTTLE CONTROL CABLE	
REMOVAL	39
INSTALLATION	41
THROTTLE POSITION SENSOR	
DESCRIPTION	41
OPERATION	41
REMOVAL	42
INSTALLATION	43

FUEL INJECTION - 2.4L/3.7L GAS

DESCRIPTION

The Powertrain Control Module (PCM) operates the fuel injection system. Refer to Powertrain Control Module in Electronic Control Modules for information.

ACCELERATOR PEDAL

REMOVAL

The accelerator pedal is serviced as a complete assembly including the bracket.

The accelerator pedal is connected to the upper part of the accelerator pedal arm by a plastic retainer (clip) (Fig. 1). This plastic retainer snaps into the top of the accelerator pedal arm.

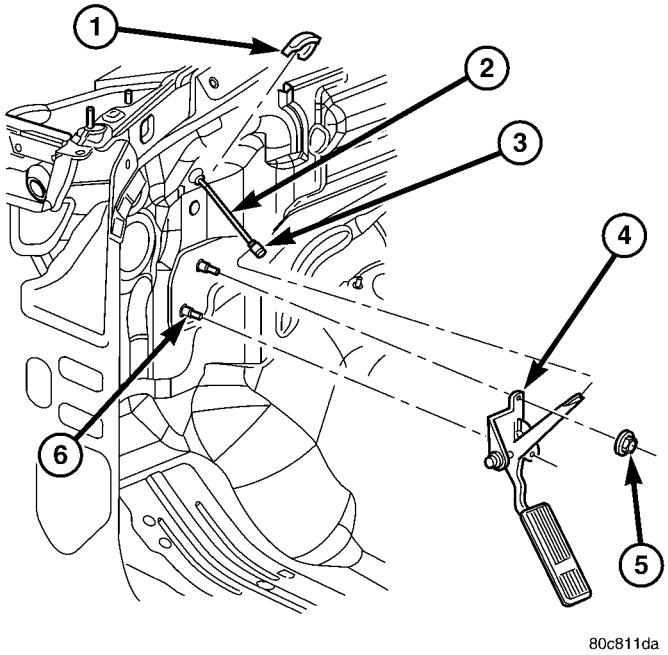

Fig. 1 ACCELERATOR PEDAL/BRACKET ASSEMBLY

1 - METAL THROTTLE CABLE CLIP
2 - THROTTLE CABLE
3 - PLASTIC CABLE RETAINER
4 - PEDAL/BRACKET ASSEMBLY
5 - PEDAL MOUNTING NUTS (2)
6 - PEDAL MOUNTING STUDS (2)

(1) From inside the vehicle, hold up accelerator pedal. Remove plastic cable retainer (clip) and throttle cable core wire from upper end of accelerator pedal arm (Fig. 1). Plastic cable retainer (clip) snaps into pedal arm.

(2) Remove 2 accelerator pedal mounting bracket nuts. Remove accelerator pedal assembly.

INSTALLATION

(1) Place accelerator pedal assembly over 2 studs (Fig. 1) protruding from floor pan.

(2) Install 2 mounting nuts. Refer to torque specifications.

(3) Slide throttle cable into opening slot in top of pedal arm.

(4) Push plastic cable retainer (clip) into accelerator pedal arm opening until it snaps into place.

(5) Before starting engine, operate accelerator pedal to check for any binding.

CRANKSHAFT POSITION SENSOR

DESCRIPTION

2.4L

The Crankshaft Position (CKP) sensor is mounted into the right front side of the cylinder block (Fig. 2). It is positioned and bolted into a machined hole.

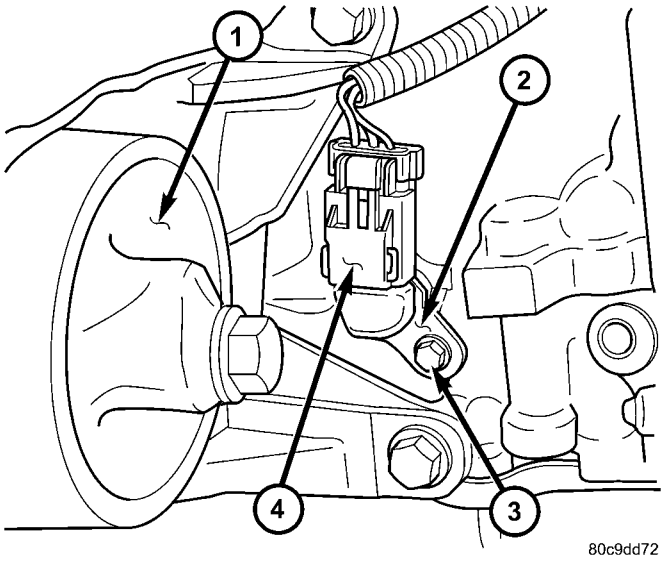

Fig. 2 CKP SENSOR LOCATION-2.4L

1 - RIGHT FRONT ENGINE MOUNT
2 - CKP SENSOR
3 - MOUNTING BOLT
4 - ELECTRICAL CONNECTOR

CRANKSHAFT POSITION SENSOR (Continued)

3.7L

The Crankshaft Position (CKP) sensor is mounted into the right rear side of the cylinder block (Fig. 3). It is positioned and bolted into a machined hole.

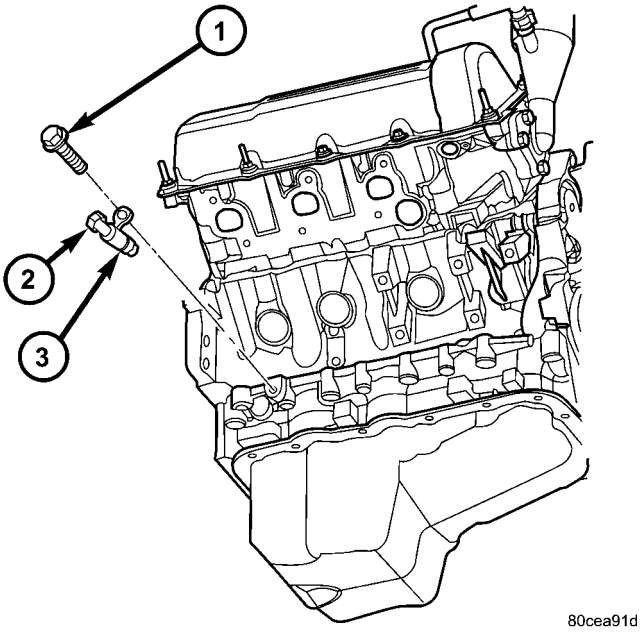

Fig. 3 CKP - 3.7L

1 - MOUNTING BOLT
2 - CKP SENSOR
3 - O-RING

OPERATION

2.4L

Engine speed and crankshaft position are provided through the CKP (Crankshaft Position) sensor. The sensor generates pulses that are the input sent to the Powertrain Control Module (PCM). The PCM interprets the sensor input to determine the crankshaft position. The PCM then uses this position, along with other inputs, to determine injector sequence and ignition timing.

The sensor is a hall effect device combined with an internal magnet. It is also sensitive to steel within a certain distance from it.

A tonewheel (targetwheel) is a part of the engine crankshaft (Fig. 4). This tonewheel has sets of notches at its outer edge.

The notches cause a pulse to be generated when they pass under the sensor. The pulses are the input to the PCM.

3.7L

Engine speed and crankshaft position are provided through the CKP (Crankshaft Position) sensor. The sensor generates pulses that are the input sent to the Powertrain Control Module (PCM). The PCM interprets the sensor input to determine the crankshaft position. The PCM then uses this position, along with other inputs, to determine injector sequence and ignition timing.

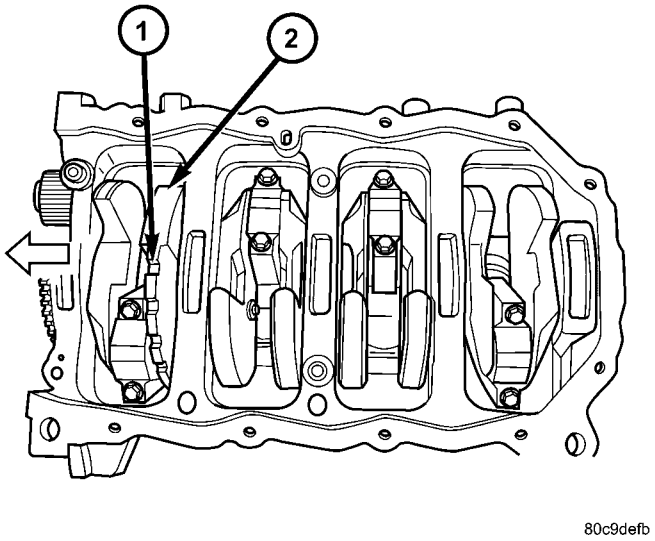

Fig. 4 CKP OPERATION-2.4L

1 - NOTCHES
2 - CRANKSHAFT

The sensor is a hall effect device combined with an internal magnet. It is also sensitive to steel within a certain distance from it.

A tonewheel (targetwheel) is bolted to the engine crankshaft (Fig. 5). This tonewheel has sets of notches at its outer edge (Fig. 5).

The notches cause a pulse to be generated when they pass under the sensor. The pulses are the input to the PCM.

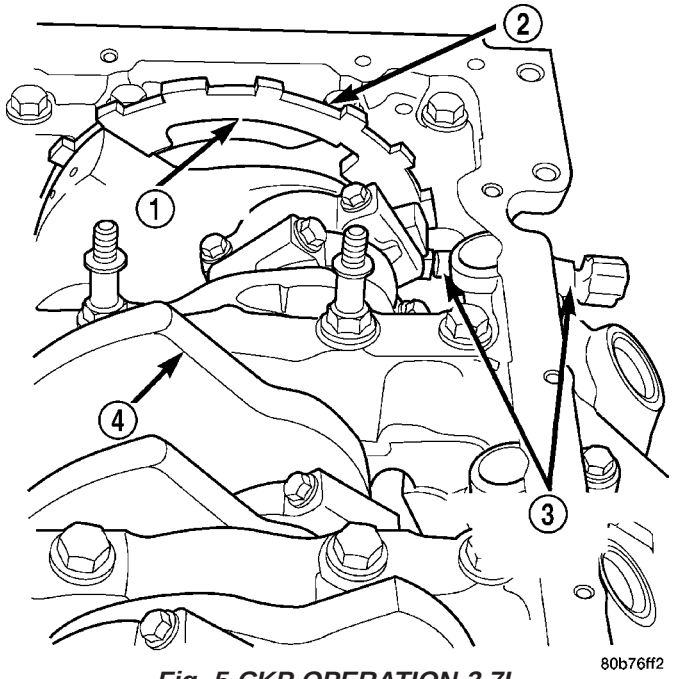

Fig. 5 CKP OPERATION-3.7L

1 - TONEWHEEL
2 - NOTCHES
3 - CRANKSHAFT POSITION SENSOR
4 - CRANKSHAFT

CRANKSHAFT POSITION SENSOR (Continued)

REMOVAL

2.4L

The Crankshaft Position (CKP) sensor is mounted into the right front side of the cylinder block (Fig. 6). It is positioned and bolted into a machined hole.

(1) Disconnect sensor electrical connector.
(2) Remove sensor bolt.
(3) Carefully twist sensor from cylinder block.
(4) Check condition of sensor o-ring (Fig. 7).

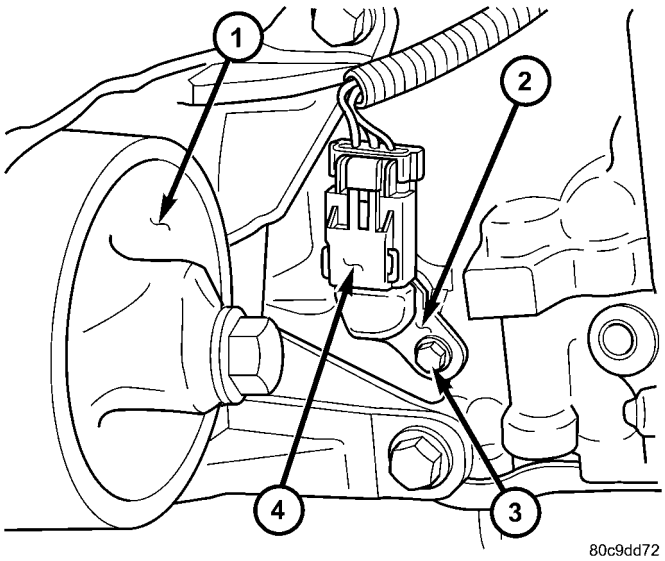

Fig. 6 CKP SENSOR LOCATION-2.4L

1 - RIGHT FRONT ENGINE MOUNT
2 - CKP SENSOR
3 - MOUNTING BOLT
4 - ELECTRICAL CONNECTOR

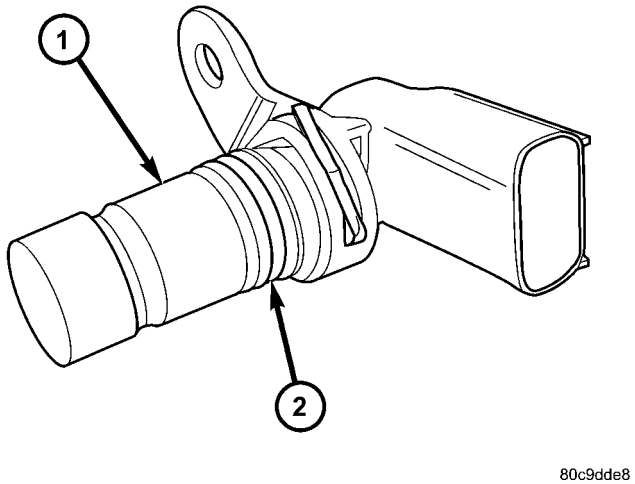

Fig. 7 CKP AND O-RING-2.4L

1 - CKP SENSOR
2 - O-RING

3.7L

The Crankshaft Position (CKP) sensor is mounted into the right rear side of the cylinder block (Fig. 8). It is positioned and bolted into a machined hole.

(1) Raise vehicle.
(2) Disconnect sensor electrical connector.
(3) Remove sensor mounting bolt (Fig. 8).
(4) Carefully twist sensor from cylinder block.
(5) Check condition of sensor o-ring.

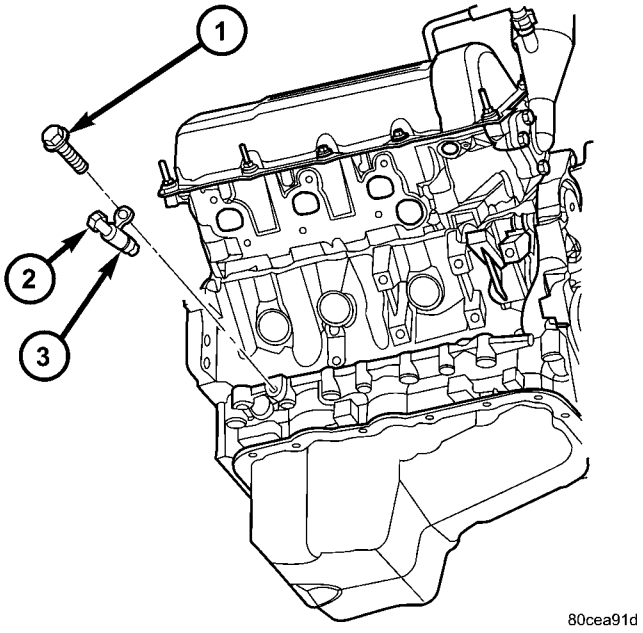

Fig. 8 CKP - 3.7L

1 - MOUNTING BOLT
2 - CKP SENSOR
3 - O-RING

INSTALLATION

2.4L

(1) Clean out machined hole in engine block.
(2) Apply a small amount of engine oil to sensor o-ring.
(3) Install sensor into engine block with a slight rocking action. Do not twist sensor into position as damage to o-ring may result.

CAUTION: Before tightening sensor mounting bolt, be sure sensor is completely flush to cylinder block. If sensor is not flush, damage to sensor mounting tang may result.

(4) Install mounting bolt and tighten to 28 N·m (21 ft. lbs.) torque.
(5) Connect electrical connector to sensor.

CRANKSHAFT POSITION SENSOR (Continued)

3.7L

(1) Clean out machined hole in engine block.

(2) Apply a small amount of engine oil to sensor o-ring.

(3) Install sensor into engine block with a slight rocking and twisting action.

CAUTION: Before tightening sensor mounting bolt, be sure sensor is completely flush to cylinder block. If sensor is not flush, damage to sensor mounting tang may result.

(4) Install mounting bolt and tighten to 28 N·m (21 ft. lbs.) torque.

(5) Connect electrical connector to sensor.

(6) Lower vehicle.

FUEL INJECTOR

DESCRIPTION

An individual fuel injector (Fig. 9) is used for each individual cylinder.

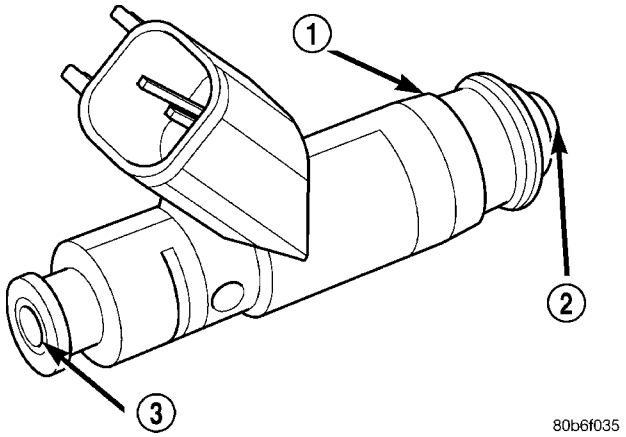

Fig. 9 FUEL INJECTOR — TYPICAL

1 - INJECTOR BODY
2 - FUEL OUTLET NOZZLE
3 - FUEL INLET NOZZLE

OPERATION

OPERATION - FUEL INJECTOR

The top (fuel entry) end of the injector (Fig. 9) is attached into an opening on the fuel rail.

The fuel injectors are electrical solenoids. The injector contains a pintle that closes off an orifice at the nozzle end. When electric current is supplied to the injector, the armature and needle move a short distance against a spring, allowing fuel to flow out the orifice. Because the fuel is under high pressure, a fine spray is developed in the shape of a pencil stream. The spraying action atomizes the fuel, adding it to the air entering the combustion chamber.

The nozzle (outlet) ends of the injectors are positioned into openings in the intake manifold just above the intake valve ports of the cylinder head. The engine wiring harness connector for each fuel injector is equipped with an attached numerical tag (INJ 1, INJ 2 etc.). This is used to identify each fuel injector.

The injectors are energized individually in a sequential order by the Powertrain Control Module (PCM). The PCM will adjust injector pulse width by switching the ground path to each individual injector on and off. Injector pulse width is the period of time that the injector is energized. The PCM will adjust injector pulse width based on various inputs it receives.

Battery voltage is supplied to the injectors through the ASD relay.

The PCM determines injector pulse width based on various inputs.

OPERATION - PCM OUTPUT

The nozzle ends of the injectors are positioned into openings in the intake manifold just above the intake valve ports of the cylinder head. The engine wiring harness connector for each fuel injector is equipped with an attached numerical tag (INJ 1, INJ 2 etc.). This is used to identify each fuel injector with its respective cylinder number.

The injectors are energized individually in a sequential order by the Powertrain Control Module (PCM). The PCM will adjust injector pulse width by switching the ground path to each individual injector on and off. Injector pulse width is the period of time that the injector is energized. The PCM will adjust injector pulse width based on various inputs it receives.

Battery voltage (12 volts +) is supplied to the injectors through the ASD relay. The ASD relay will shutdown the 12 volt power source to the fuel injectors if the PCM senses the ignition is on, but the engine is not running. This occurs after the engine has not been running for approximately 1.8 seconds.

The PCM determines injector on-time (pulse width) based on various inputs.

FUEL INJECTOR (Continued)

REMOVAL

(1) Remove fuel rail. Refer to Fuel Injector Rail Removal.

(2) Disconnect clip(s) that retain fuel injector(s) to fuel rail (Fig. 10).

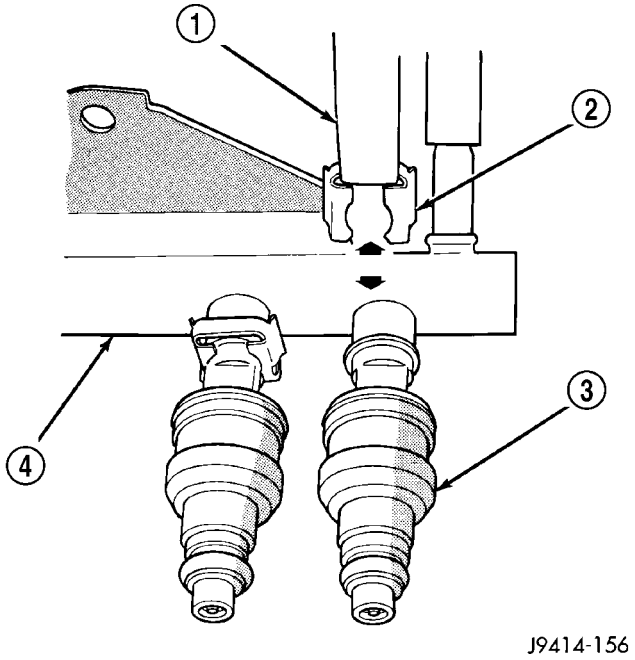

Fig. 10 INJECTOR RETAINING CLIP

1 - PLIERS
2 - INJECTOR CLIP
3 - FUEL INJECTOR
4 - FUEL RAIL - TYPICAL

INSTALLATION

(1) Install fuel injector(s) into fuel rail assembly and install retaining clip(s).

(2) If same injector(s) is being reinstalled, install new o-ring(s). Two different o-rings are being used. These can be easily identified by color. Install black o-ring at intake manifold end of injector. Install red/rust colored o-ring at fuel rail end of injector.

(3) Apply a small amount of clean engine oil to each injector o-ring. This will aid in installation.

(4) Install fuel rail. Refer to Fuel Rail Installation.

(5) Start engine and check for fuel leaks.

FUEL PUMP RELAY

DESCRIPTION

The 5–pin, 12–volt, fuel pump relay is located in the Power Distribution Center (PDC). Refer to the label on the PDC cover for relay location.

OPERATION

The Powertrain Control Module (PCM) energizes the electric fuel pump through the fuel pump relay. The fuel pump relay is energized by first applying battery voltage to it when the ignition key is turned ON, and then applying a ground signal to the relay from the PCM.

Whenever the ignition key is turned ON, the electric fuel pump will operate. But, the PCM will shutdown the ground circuit to the fuel pump relay in approximately 1–3 seconds unless the engine is operating or the starter motor is engaged.

REMOVAL

The fuel pump relay is located in the Power Distribution Center (PDC) (Fig. 11). Refer to label on PDC cover for relay location.

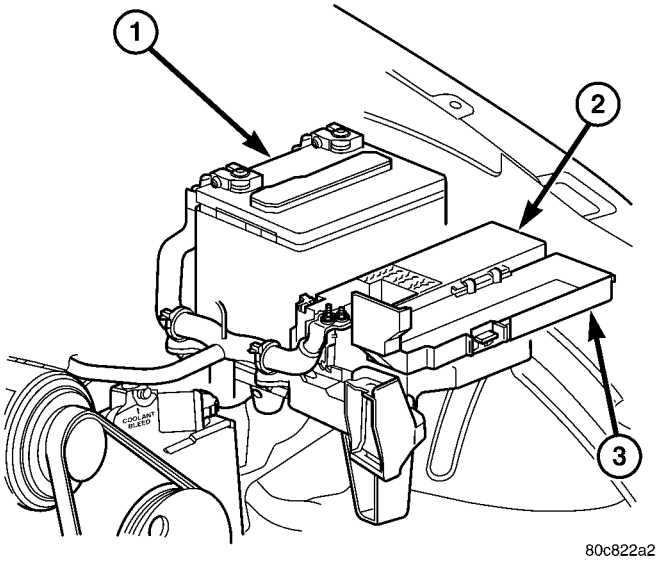

Fig. 11 POWER DISTRIBUTION CENTER (PDC)

1 - BATTERY
2 - PDC
3 - PDC COVER

(1) Remove PDC cover.

(2) Remove relay from PDC.

(3) Check condition of relay terminals and PDC connector terminals for damage or corrosion. Repair if necessary before installing relay.

(4) Check for pin height (pin height should be the same for all terminals within the PDC connector). Repair if necessary before installing relay.

INSTALLATION

The fuel pump relay is located in the Power Distribution Center (PDC). Refer to label on PDC cover for relay location.

(1) Install relay to PDC.

(2) Install cover to PDC.

IDLE AIR CONTROL MOTOR

DESCRIPTION

The IAC stepper motor is mounted to the throttle body, and regulates the amount of air bypassing the control of the throttle plate. As engine loads and ambient temperatures change, engine rpm changes. A pintle on the IAC stepper motor protrudes into a passage in the throttle body, controlling air flow through the passage. The IAC is controlled by the Powertrain Control Module (PCM) to maintain the target engine idle speed.

OPERATION

At idle, engine speed can be increased by retracting the IAC motor pintle and allowing more air to pass through the port, or it can be decreased by restricting the passage with the pintle and diminishing the amount of air bypassing the throttle plate.

The IAC is called a stepper motor because it is moved (rotated) in steps, or increments. Opening the IAC opens an air passage around the throttle blade which increases RPM.

The PCM uses the IAC motor to control idle speed (along with timing) and to reach a desired MAP during decel (keep engine from stalling).

The IAC motor has 4 wires with 4 circuits. Two of the wires are for 12 volts and ground to supply electrical current to the motor windings to operate the stepper motor in one direction. The other 2 wires are also for 12 volts and ground to supply electrical current to operate the stepper motor in the opposite direction.

To make the IAC go in the opposite direction, the PCM just reverses polarity on both windings. If only 1 wire is open, the IAC can only be moved 1 step (increment) in either direction. To keep the IAC motor in position when no movement is needed, the PCM will energize both windings at the same time. This locks the IAC motor in place.

In the IAC motor system, the PCM will count every step that the motor is moved. This allows the PCM to determine the motor pintle position. If the memory is cleared, the PCM no longer knows the position of the pintle. So at the first key ON, the PCM drives the IAC motor closed, regardless of where it was before. This zeros the counter. From this point the PCM will back out the IAC motor and keep track of its position again.

When engine rpm is above idle speed, the IAC is used for the following:

- Off-idle dashpot (throttle blade will close quickly but idle speed will not stop quickly)
- Deceleration air flow control
- A/C compressor load control (also opens the passage slightly before the compressor is engaged so that the engine rpm does not dip down when the compressor engages)
- Power steering load control

The PCM can control polarity of the circuit to control direction of the stepper motor.

IAC Stepper Motor Program: The PCM is also equipped with a memory program that records the number of steps the IAC stepper motor most recently advanced to during a certain set of parameters. For example: The PCM was attempting to maintain a 1000 rpm target during a cold start-up cycle. The last recorded number of steps for that may have been 125. That value would be recorded in the memory cell so that the next time the PCM recognizes the identical conditions, the PCM recalls that 125 steps were required to maintain the target. This program allows for greater customer satisfaction due to greater control of engine idle.

Another function of the memory program, which occurs when the power steering switch (if equipped), or the A/C request circuit, requires that the IAC stepper motor control engine rpm, is the recording of the last targeted steps into the memory cell. The PCM can anticipate A/C compressor loads. This is accomplished by delaying compressor operation for approximately 0.5 seconds until the PCM moves the IAC stepper motor to the recorded steps that were loaded into the memory cell. Using this program helps eliminate idle-quality changes as loads change. Finally, the PCM incorporates a ″No-Load″ engine speed limiter of approximately 1800 - 2000 rpm, when it recognizes that the TPS is indicating an idle signal and IAC motor cannot maintain engine idle.

A (factory adjusted) set screw is used to mechanically limit the position of the throttle body throttle plate. **Never attempt to adjust the engine idle speed using this screw.** All idle speed functions are controlled by the IAC motor through the PCM.

IDLE AIR CONTROL MOTOR (Continued)

REMOVAL

2.4L

The Idle Air Control (IAC) motor is located on the rear side of the throttle body (Fig. 12).

(1) Disconnect electrical connector from IAC motor.
(2) Remove two mounting bolts (screws).
(3) Remove IAC motor from throttle body.

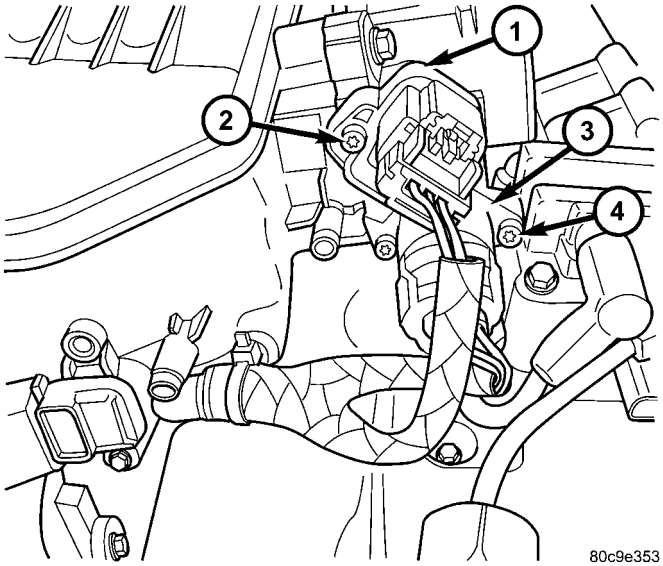

Fig. 12 TPS/IAC MOTOR - 2.4L

1 - THROTTLE POSITION SENSOR (TPS)
2 - MOUNTING SCREWS
3 - IDLE AIR CONTROL MOTOR (IAC)
4 - MOUNTING SCREWS

3.7L

The Idle Air Control (IAC) motor is located on the side of the throttle body (Fig. 13).

(1) Disconnect electrical connector from IAC motor.
(2) Remove two mounting bolts (screws).
(3) Remove IAC motor from throttle body.

INSTALLATION

2.4L

The Idle Air Control (IAC) motor is located on the rear side of the throttle body.

(1) Install IAC motor to throttle body.
(2) Install and tighten two mounting bolts (screws) to 7 N·m (60 in. lbs.) torque.
(3) Install electrical connector.

3.7L

The Idle Air Control (IAC) motor is located on the side of the throttle body (Fig. 13).

(1) Install IAC motor to throttle body.
(2) Install and tighten two mounting bolts (screws) to 7 N·m (60 in. lbs.) torque.

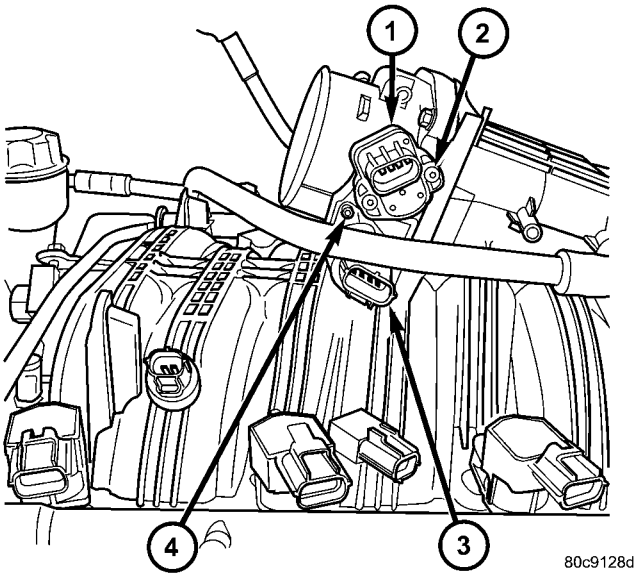

Fig. 13 TPS/IAC MOTOR - 3.7L

1 - THROTTLE POSITION SENSOR (TPS)
2 - MOUNTING SCREWS
3 - IDLE AIR CONTROL MOTOR (IAC)
4 - MOUNTING SCREWS

(3) Install electrical connector.

INTAKE AIR TEMPERATURE SENSOR

DESCRIPTION

The 2–wire Intake Manifold Air Temperature (IAT) sensor is installed in the intake manifold with the sensor element extending into the air stream.

The IAT sensor is a two-wire Negative Thermal Coefficient (NTC) sensor. Meaning, as intake manifold temperature increases, resistance (voltage) in the sensor decreases. As temperature decreases, resistance (voltage) in the sensor increases.

OPERATION

The IAT sensor provides an input voltage to the Powertrain Control Module (PCM) indicating the density of the air entering the intake manifold based upon intake manifold temperature. At key-on, a 5–volt power circuit is supplied to the sensor from the PCM. The sensor is grounded at the PCM through a low-noise, sensor-return circuit.

The PCM uses this input to calculate the following:

- Injector pulse-width
- Adjustment of spark timing (to help prevent spark knock with high intake manifold air-charge temperatures)

The resistance values of the IAT sensor is the same as for the Engine Coolant Temperature (ECT) sensor.

INTAKE AIR TEMPERATURE SENSOR (Continued)

REMOVAL

2.4L

The intake manifold air temperature (IAT) sensor is installed into the intake manifold plenum at the rear end of the intake manifold (Fig. 14).

(1) Disconnect electrical connector from IAT sensor.

(2) Clean dirt from intake manifold at sensor base.

(3) Gently lift on small plastic release tab (Fig. 14) or (Fig. 15) and rotate sensor about 1/4 turn counterclockwise for removal.

(4) Check condition of sensor o-ring (Fig. 15).

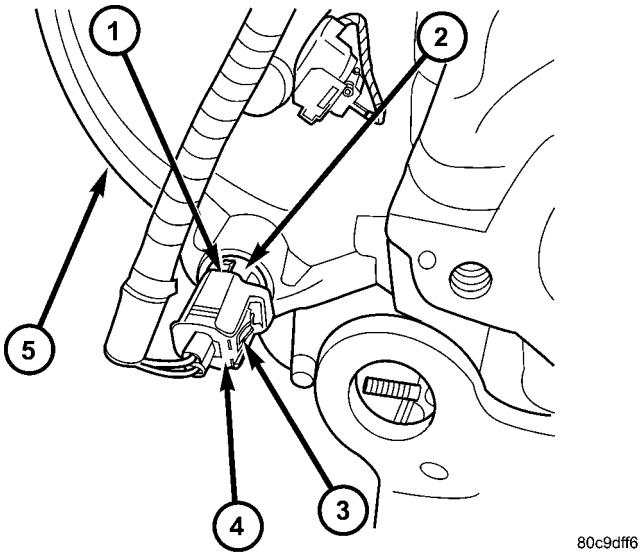

Fig. 14 IAT SENSOR LOCATION-2.4L

1 - RELEASE TAB
2 - IAT SENSOR
3 - PRESS HERE FOR REMOVAL
4 - ELECTRICAL CONNECTOR
5 - REAR END OF INTAKE MANIFOLD

3.7L

The intake manifold air temperature (IAT) sensor is installed into the left side of intake manifold plenum (Fig. 16).

(1) Disconnect electrical connector from IAT sensor.

(2) Clean dirt from intake manifold at sensor base.

(3) Gently lift on small plastic release tab (Fig. 16) or (Fig. 15) and rotate sensor about 1/4 turn counterclockwise for removal.

(4) Check condition of sensor o-ring.

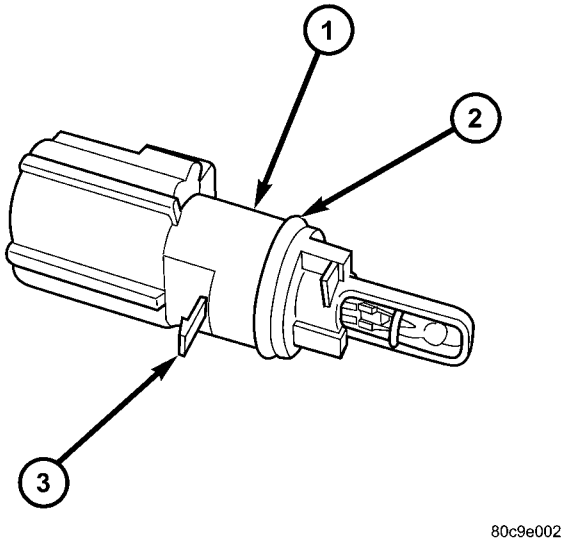

Fig. 15 IAT SENSOR TAB / O-RING

1 - IAT SENSOR
2 - SENSOR O-RING
3 - RELEASE TAB

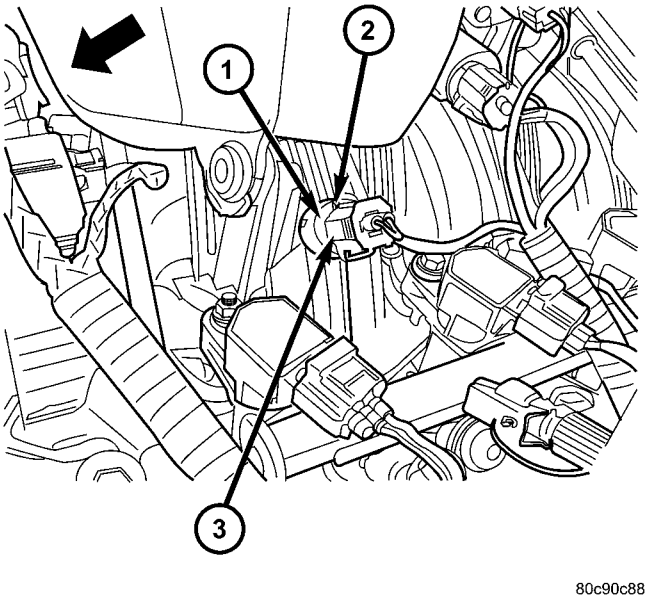

Fig. 16 IAT SENSOR LOCATION- 3.7L

1 - IAT SENSOR
2 - RELEASE TAB
3 - ELECTRICAL CONNECTOR

INTAKE AIR TEMPERATURE SENSOR (Continued)

INSTALLATION

2.4L

The intake manifold air temperature (IAT) sensor is installed into the intake manifold plenum at the rear end of the intake manifold.

(1) Check condition of sensor o-ring.
(2) Clean sensor mounting hole in intake manifold.
(3) Position sensor into intake manifold and rotate clockwise until past release tab.
(4) Install electrical connector.

3.7L

The intake manifold air temperature (IAT) sensor is installed into the left side of intake manifold plenum (Fig. 16).

(1) Check condition of sensor o-ring.
(2) Clean sensor mounting hole in intake manifold.
(3) Position sensor into intake manifold and rotate clockwise until past release tab (Fig. 16).
(4) Install electrical connector.

MAP SENSOR

DESCRIPTION

2.4L

The Manifold Absolute Pressure (MAP) sensor is mounted into the rear of the intake manifold with 1 screw.

3.7L

The Manifold Absolute Pressure (MAP) sensor is mounted into the front of the intake manifold with 2 screws.

OPERATION

The MAP sensor is used as an input to the Powertrain Control Module (PCM). It contains a silicon based sensing unit to provide data on the manifold vacuum that draws the air/fuel mixture into the combustion chamber. The PCM requires this information to determine injector pulse width and spark advance. When manifold absolute pressure (MAP) equals Barometric pressure, the pulse width will be at maximum.

A 5 volt reference is supplied from the PCM and returns a voltage signal to the PCM that reflects manifold pressure. The zero pressure reading is 0.5V and full scale is 4.5V. For a pressure swing of 0–15 psi, the voltage changes 4.0V. To operate the sensor, it is supplied a regulated 4.8 to 5.1 volts. Ground is provided through the low-noise, sensor return circuit at the PCM.

The MAP sensor input is the number one contributor to fuel injector pulse width. The most important function of the MAP sensor is to determine barometric pressure. The PCM needs to know if the vehicle is at sea level or at a higher altitude, because the air density changes with altitude. It will also help to correct for varying barometric pressure. Barometric pressure and altitude have a direct inverse correlation; as altitude goes up, barometric goes down. At key-on, the PCM powers up and looks at MAP voltage, and based upon the voltage it sees, it knows the current barometric pressure (relative to altitude). Once the engine starts, the PCM looks at the voltage again, continuously every 12 milliseconds, and compares the current voltage to what it was at key-on. The difference between current voltage and what it was at key-on, is manifold vacuum.

During key-on (engine not running) the sensor reads (updates) barometric pressure. A normal range can be obtained by monitoring a known good sensor.

As the altitude increases, the air becomes thinner (less oxygen). If a vehicle is started and driven to a very different altitude than where it was at key-on, the barometric pressure needs to be updated. Any time the PCM sees Wide Open Throttle (WOT), based upon Throttle Position Sensor (TPS) angle and RPM, it will update barometric pressure in the MAP memory cell. With periodic updates, the PCM can make its calculations more effectively.

The PCM uses the MAP sensor input to aid in calculating the following:

- Manifold pressure
- Barometric pressure
- Engine load
- Injector pulse-width
- Spark-advance programs
- Shift-point strategies (certain automatic transmissions only)
- Idle speed
- Decel fuel shutoff

The MAP sensor signal is provided from a single piezoresistive element located in the center of a diaphragm. The element and diaphragm are both made of silicone. As manifold pressure changes, the diaphragm moves causing the element to deflect, which stresses the silicone. When silicone is exposed to stress, its resistance changes. As manifold vacuum increases, the MAP sensor input voltage decreases proportionally. The sensor also contains electronics that condition the signal and provide temperature compensation.

The PCM recognizes a decrease in manifold pressure by monitoring a decrease in voltage from the reading stored in the barometric pressure memory cell. The MAP sensor is a linear sensor; meaning as pressure changes, voltage changes proportionately. The range of voltage output from the sensor is usually between 4.6 volts at sea level to as low as 0.3 volts at 26 in. of Hg. Barometric pressure is the pressure exerted by the atmosphere upon an object. At sea level on a standard day, no storm, barometric

MAP SENSOR (Continued)

pressure is approximately 29.92 in Hg. For every 100 feet of altitude, barometric pressure drops 0.10 in. Hg. If a storm goes through, it can change barometric pressure from what should be present for that altitude. You should know what the average pressure and corresponding barometric pressure is for your area.

REMOVAL

2.4L

The Manifold Absolute Pressure (MAP) sensor is mounted into the rear of the intake manifold (Fig. 17). An o-ring is used to seal the sensor to the intake manifold (Fig. 19).

(1) Disconnect electrical connector at sensor.
(2) Clean area around MAP sensor.
(3) Remove sensor mounting screw (TORX head).
(4) Remove MAP sensor from intake manifold.
(5) Check condition of sensor o-ring (Fig. 19).

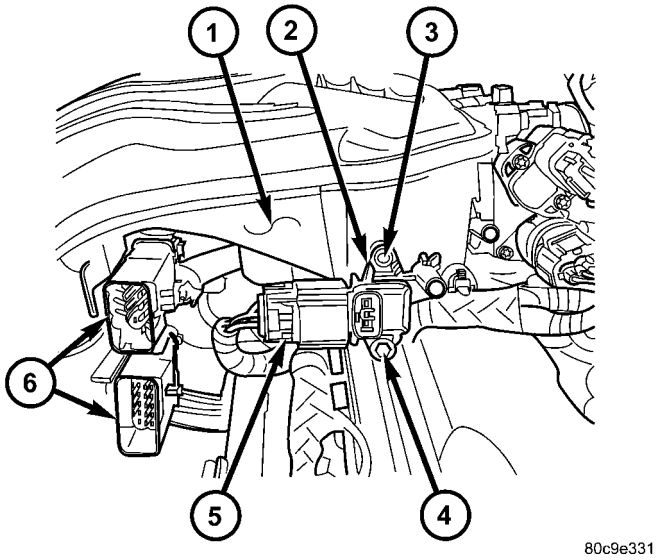

Fig. 17 MAP SENSOR LOCATION-2.4L

1 - REAR OF INTAKE MANIFOLD
2 - MAP SENSOR
3 - ALIGNMENT PIN
4 - MOUNTING BOLT (TORX)
5 - ELECTRICAL CONNECTOR
6 - MAIN ENGINE HARNESS CONNECTORS

3.7L

The Manifold Absolute Pressure (MAP) sensor is mounted into the front of the intake manifold (Fig. 18). An o-ring is used to seal the sensor to the intake manifold (Fig. 19).

(1) Disconnect electrical connector at sensor.
(2) Clean area around MAP sensor.
(3) Remove 2 sensor mounting screws.
(4) Remove MAP sensor from intake manifold.
(5) Check condition of sensor o-ring (Fig. 19).

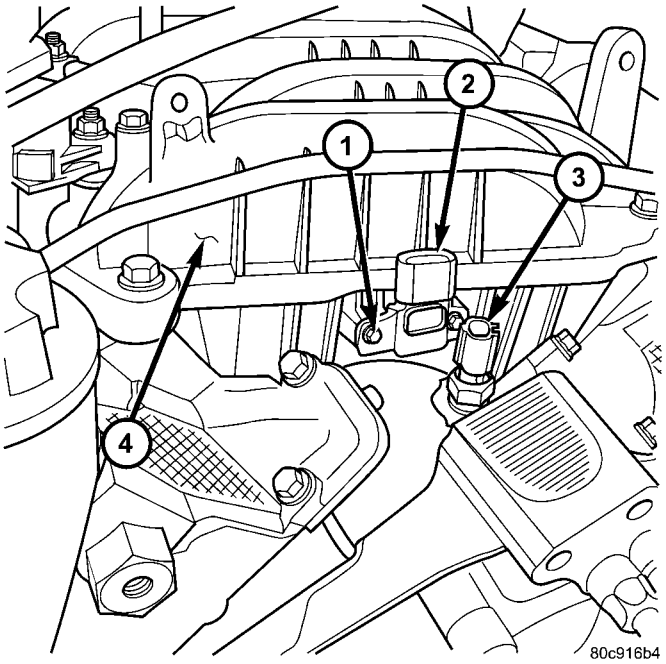

Fig. 18 MAP SENSOR / ECT SENSOR - 3.7L

1 - MOUNTING SCREWS
2 - MAP SENSOR
3 - ECT SENSOR
4 - FRONT OF INTAKE MANIFOLD

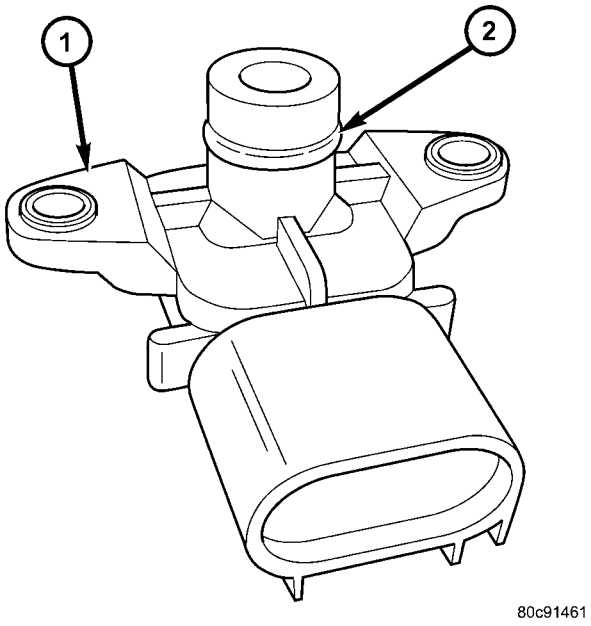

Fig. 19 MAP SENSOR O-RING

1 - MAP SENSOR
2 - O-RING

MAP SENSOR (Continued)

INSTALLATION

2.4L

The Manifold Absolute Pressure (MAP) sensor is mounted into the rear of the intake manifold. An o-ring is used to seal the sensor to the intake manifold (Fig. 19).

(1) Clean MAP sensor mounting hole at intake manifold.

(2) Check MAP sensor o-ring seal for cuts or tears.

(3) Position sensor into manifold.

(4) Install MAP sensor mounting screws. Tighten screw to 3 N·m (25 in. lbs.) torque.

(5) Connect electrical connector.

3.7L

The Manifold Absolute Pressure (MAP) sensor is mounted into the front of the intake manifold (Fig. 18). An o-ring is used to seal the sensor to the intake manifold (Fig. 19).

(1) Clean MAP sensor mounting hole at intake manifold.

(2) Check MAP sensor o-ring seal for cuts or tears.

(3) Position sensor into manifold.

(4) Install MAP sensor mounting bolts (screws). Tighten screws to 3 N·m (25 in. lbs.) torque.

(5) Connect electrical connector.

OXYGEN SENSOR

DESCRIPTION

The Oxygen Sensors (O2S) are attached to, and protrude into the vehicle exhaust system. Depending on the engine or emission package, the vehicle may use a total of either 2 or 4 sensors.

2.4L Engine: Two sensors are used: upstream (referred to as 1/1) and downstream (referred to as 1/2). With this emission package, the upstream sensor (1/1) is located just before the main catalytic convertor. The downstream sensor (1/2) is located just after the main catalytic convertor.

3.7L V-6 Engine: On this emissions package, 4 sensors are used: 2 upstream (referred to as 1/1 and 2/1) and 2 downstream (referred to as 1/2 and 2/2). With this emission package, the right upstream sensor (2/1) is located in the right exhaust downpipe just before the mini-catalytic convertor. The left upstream sensor (1/1) is located in the left exhaust downpipe just before the mini-catalytic convertor. The right downstream sensor (2/2) is located in the right exhaust downpipe just after the mini-catalytic convertor, and before the main catalytic convertor. The left downstream sensor (1/2) is located in the left exhaust downpipe just after the mini-catalytic convertor, and before the main catalytic convertor.

OPERATION

An O2 sensor is a galvanic battery that provides the PCM with a voltage signal (0-1 volt) inversely proportional to the amount of oxygen in the exhaust. In other words, if the oxygen content is low, the voltage output is high; if the oxygen content is high the output voltage is low. The PCM uses this information to adjust injector pulse-width to achieve the 14.7–to–1 air/fuel ratio necessary for proper engine operation and to control emissions.

The O2 sensor must have a source of oxygen from outside of the exhaust stream for comparison. Current O2 sensors receive their fresh oxygen (outside air) supply through the O2 sensor case housing.

Four wires (circuits) are used on each O2 sensor: a 12–volt feed circuit for the sensor heating element; a ground circuit for the heater element; a low-noise sensor return circuit to the PCM, and an input circuit from the sensor back to the PCM to detect sensor operation.

Oxygen Sensor Heater Relay - 3.7L Engine: On the 3.7L engine, 4 heated oxygen sensors are used. A separate oxygen sensor relay is used to supply voltage to the sensors heating elements for only the 1/2 and 2/2 downstream sensors. Voltage for the other 2 sensor heating elements is supplied directly from the Powertrain Control Module (PCM) through a Pulse Width Module (PWM) method.

Pulse Width Module (PWM): Voltage to the O2 sensor heating elements is supplied directly from the Powertrain Control Module (PCM) through two separate Pulse Width Module (PWM) low side drivers. PWM is used on both the upstream and downstream O2 sensors on the 2.4L engine, and only on the 2 upstream sensors (1/1 and 2/1) on the 3.7L engine. The main objective for a PWM driver is to avoid overheating of the O2 sensor heater element. With exhaust temperatures increasing with time and engine speed, it's not required to have a full-voltage duty-cycle on the O2 heater elements.

To avoid the large simultaneous current surge needed to operate all 4 sensors, power is delayed to the 2 downstream heater elements by the PCM for approximately 2 seconds.

Oxygen Sensor Heater Elements:

The O2 sensor uses a Positive Thermal Co-efficient (PTC) heater element. As temperature increases, resistance increases. At ambient temperatures around 70°F, the resistance of the heating element is approximately 4.5 ohms. As the sensor's temperature increases, resistance in the heater element increases. This allows the heater to maintain the optimum operating temperature of approximately 930°-1100°F (500°-600° C). Although the sensors operate the same, there are physical differences, due to the envi-

OXYGEN SENSOR (Continued)

ronment that they operate in, that keep them from being interchangeable.

Maintaining correct sensor temperature at all times allows the system to enter into closed loop operation sooner. Also, it allows the system to remain in closed loop operation during periods of extended idle.

In Closed Loop operation, the PCM monitors certain O2 sensor input(s) along with other inputs, and adjusts the injector pulse width accordingly. During Open Loop operation, the PCM ignores the O2 sensor input. The PCM adjusts injector pulse width based on preprogrammed (fixed) values and inputs from other sensors.

Upstream Sensor - 2.4L Engine: The upstream sensor (1/1) provides an input voltage to the PCM. The input tells the PCM the oxygen content of the exhaust gas. The PCM uses this information to fine tune fuel delivery to maintain the correct oxygen content at the downstream oxygen sensor. The PCM will change the air/fuel ratio until the upstream sensor inputs a voltage that the PCM has determined will make the downstream sensor output (oxygen content) correct.

The upstream oxygen sensor also provides an input to determine catalytic convertor efficiency.

Downstream Sensor - 2.4L Engine: The downstream oxygen sensor (1/2) is also used to determine the correct air-fuel ratio. As the oxygen content changes at the downstream sensor, the PCM calculates how much air-fuel ratio change is required. The PCM then looks at the upstream oxygen sensor voltage and changes fuel delivery until the upstream sensor voltage changes enough to correct the downstream sensor voltage (oxygen content).

The downstream oxygen sensor also provides an input to determine catalytic convertor efficiency.

Upstream Sensors - 3.7L Engine: Two upstream sensors are used (1/1 and 2/1). The 1/1 sensor is the first sensor to receive exhaust gases from the #1 cylinder. They provide an input voltage to the PCM. The input tells the PCM the oxygen content of the exhaust gas. The PCM uses this information to fine tune fuel delivery to maintain the correct oxygen content at the downstream oxygen sensors. The PCM will change the air/fuel ratio until the upstream sensors input a voltage that the PCM has determined will make the downstream sensors output (oxygen content) correct.

The upstream oxygen sensors also provide an input to determine mini-catalyst efficiency. Main catalytic convertor efficiency is not calculated with this package.

Downstream Sensors - 3.7L Engine: Two downstream sensors are used (1/2 and 2/2). The downstream sensors are used to determine the correct air-fuel ratio. As the oxygen content changes at the downstream sensor, the PCM calculates how much air-fuel ratio change is required. The PCM then looks at the upstream oxygen sensor voltage, and changes fuel delivery until the upstream sensor voltage changes enough to correct the downstream sensor voltage (oxygen content).

The downstream oxygen sensors also provide an input to determine mini-catalyst efficiency. Main catalytic convertor efficiency is not calculated with this package.

Engines equipped with either a downstream sensor(s), or a post-catalytic sensor, will monitor catalytic convertor efficiency. If efficiency is below emission standards, the Malfunction Indicator Lamp (MIL) will be illuminated and a Diagnostic Trouble Code (DTC) will be set. Refer to Monitored Systems in Emission Control Systems for additional information.

REMOVAL

CAUTION: Never apply any type of grease to the oxygen sensor electrical connector, or attempt any soldering of the sensor wiring harness.

Refer to (Fig. 20), (Fig. 21) or (Fig. 22) for O2S (oxygen sensor) location.

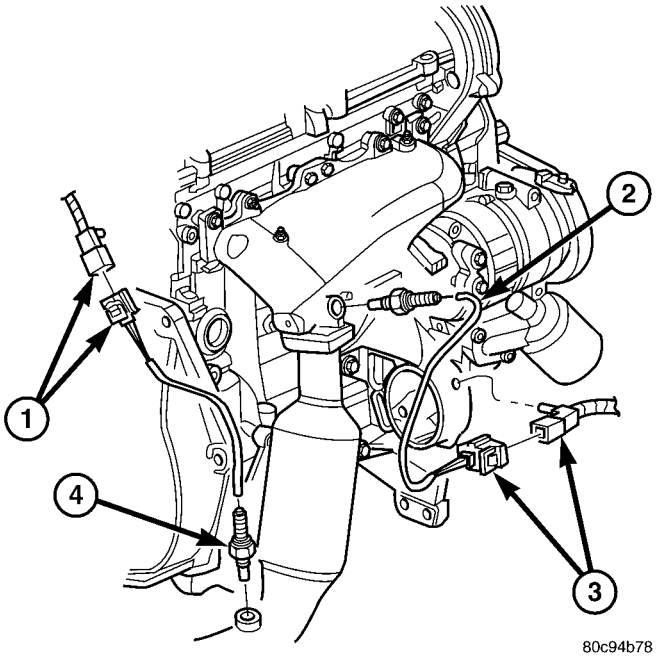

Fig. 20 OXYGEN SENSORS - 2.4L

1 - ELECTRICAL CONNECTORS
2 - UPSTREAM SENSOR (1/1)
3 - ELECTRICAL CONNECTORS
4 - DOWNSTREAM SENSOR (1/2)

OXYGEN SENSOR (Continued)

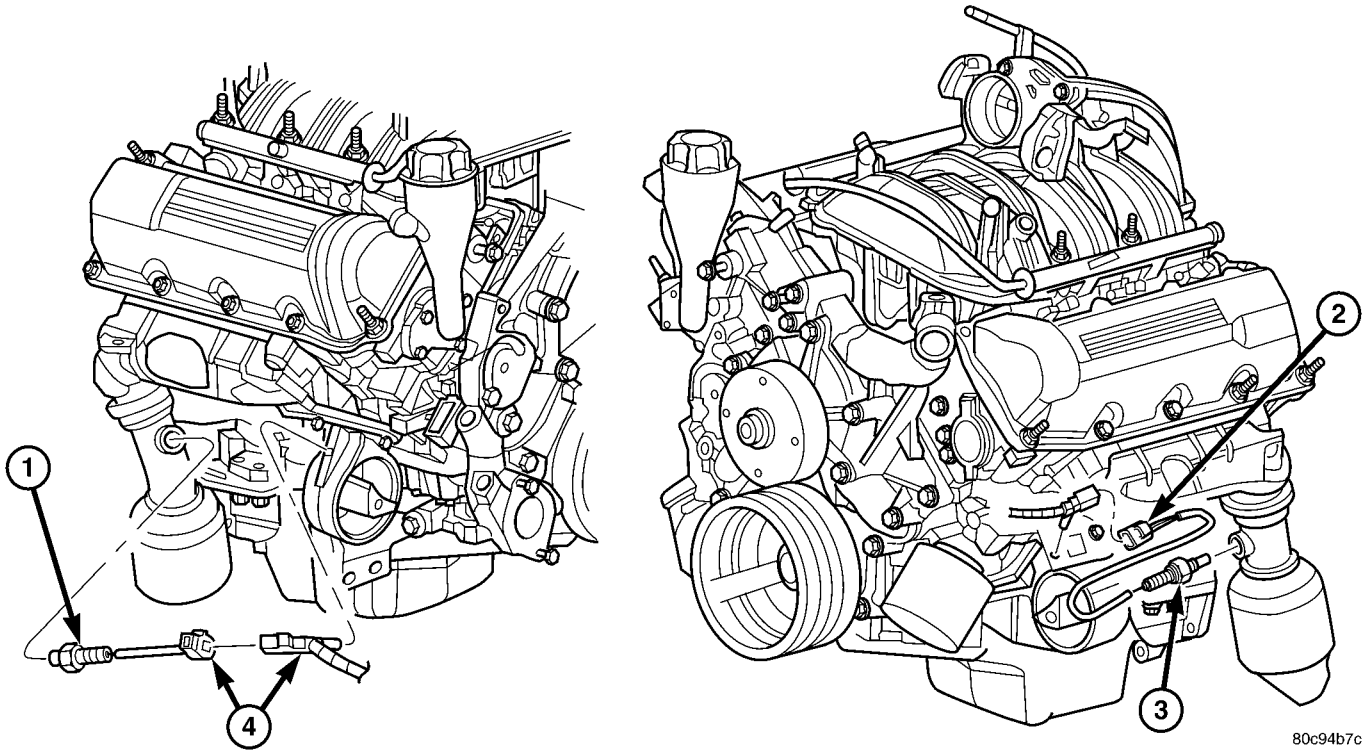

Fig. 21 OXYGEN SENSORS - UPSTREAM - 3.7L

1 - RIGHT UPSTREAM SENSOR (2/1)
2 - ELECTRICAL CONNECTORS
3 - LEFT UPSTREAM SENSOR (1/1)
4 - ELECTRICAL CONNECTORS

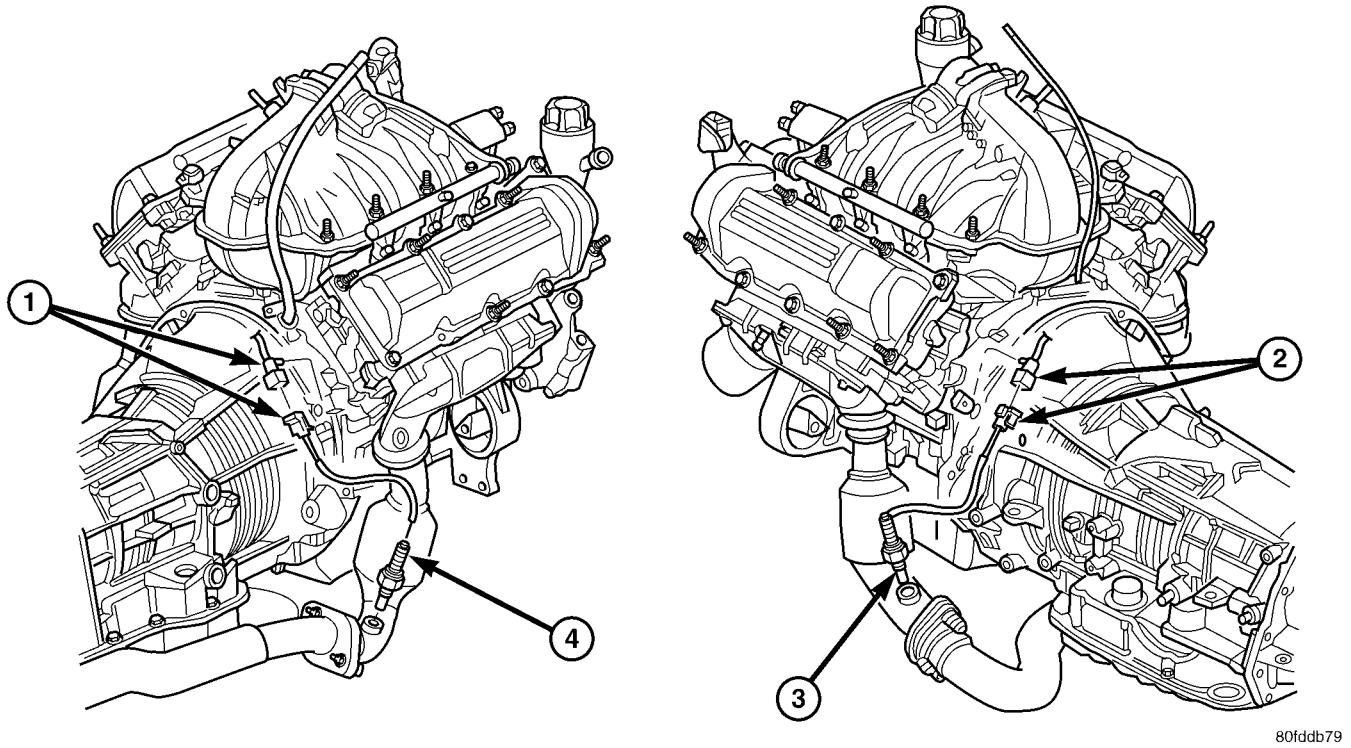

Fig. 22 OXYGEN SENSORS - DOWNSTREAM - 3.7L

1 - ELECTRICAL CONNECTORS
2 - ELECTRICAL CONNECTORS
3 - LEFT DOWNSTREAM SENSOR (1/2)
4 - RIGHT DOWNSTREAM SENSOR (2/2)

OXYGEN SENSOR (Continued)

WARNING: THE EXHAUST MANIFOLD, EXHAUST PIPES AND CATALYTIC CONVERTER BECOME VERY HOT DURING ENGINE OPERATION. ALLOW ENGINE TO COOL BEFORE REMOVING OXYGEN SENSOR.

(1) Raise and support vehicle.
(2) Disconnect wire connector from O2S sensor.

CAUTION: When disconnecting sensor electrical connector, do not pull directly on wire going into sensor.

(3) Remove O2S sensor with an oxygen sensor removal and installation tool.
(4) Clean threads in exhaust pipe using appropriate tap.

INSTALLATION

Threads of new oxygen sensors are factory coated with anti-seize compound to aid in removal. **DO NOT add any additional anti-seize compound to threads of a new oxygen sensor.**

(1) Install O2S sensor. Tighten to 30 N·m (22 ft. lbs.) torque.
(2) Connect O2S sensor wire connector.
(3) Lower vehicle.

THROTTLE BODY

DESCRIPTION

The throttle body is located on the intake manifold. Fuel does not enter the intake manifold through the throttle body. Fuel is sprayed into the manifold by the fuel injectors.

OPERATION

Filtered air from the air cleaner enters the intake manifold through the throttle body. The throttle body contains an air control passage controlled by an Idle Air Control (IAC) motor. The air control passage is used to supply air for idle conditions. A throttle valve (plate) is used to supply air for above idle conditions.

Certain sensors are attached to the throttle body. The accelerator pedal cable, speed control cable and transmission control cable (when equipped) are connected to the throttle body linkage arm.

A (factory adjusted) set screw is used to mechanically limit the position of the throttle body throttle plate. **Never attempt to adjust the engine idle speed using this screw.** All idle speed functions are controlled by the PCM.

REMOVAL

2.4L

A (factory adjusted) set screw is used to mechanically limit the position of the throttle body throttle plate. **Never attempt to adjust the engine idle speed using this screw.** All idle speed functions are controlled by the Powertrain Control Module (PCM).

(1) Remove air cleaner tube at throttle body.
(2) Disconnect throttle body electrical connectors at IAC motor and TPS.
(3) Remove all control cables from throttle body (lever) arm. Refer to the Accelerator Pedal and Throttle Cable section for removal/installation procedures.
(4) Disconnect necessary vacuum lines at throttle body.
(5) Remove 3 throttle body mounting bolts (Fig. 23).
(6) Remove throttle body from intake manifold.
(7) Check condition of old throttle body-to-intake manifold o-ring.

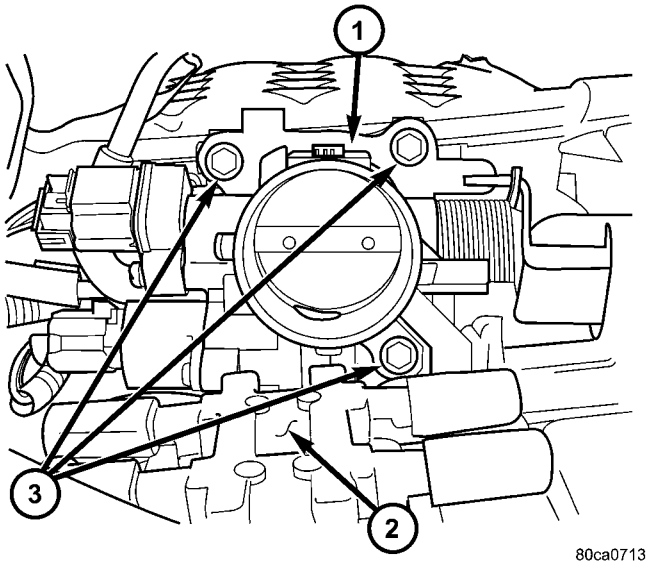

Fig. 23 THROTTLE BODY MOUNTING BOLTS - 2.4L

1 - THROTTLE BODY
2 - IGNITION COIL
3 - MOUNTING BOLTS (3)

3.7L

A (factory adjusted) set screw is used to mechanically limit the position of the throttle body throttle plate. **Never attempt to adjust the engine idle speed using this screw.** All idle speed functions are controlled by the Powertrain Control Module (PCM).

(1) Remove air cleaner tube at throttle body.
(2) Disconnect throttle body electrical connectors at IAC motor and TPS.

THROTTLE BODY (Continued)

(3) Remove all control cables from throttle body (lever) arm. Refer to the Accelerator Pedal and Throttle Cable section for removal/installation procedures.

(4) Disconnect necessary vacuum lines at throttle body.

(5) Remove 3 throttle body mounting bolts (Fig. 24).

(6) Remove throttle body from intake manifold.

(7) Check condition of old throttle body-to-intake manifold o-ring (Fig. 25).

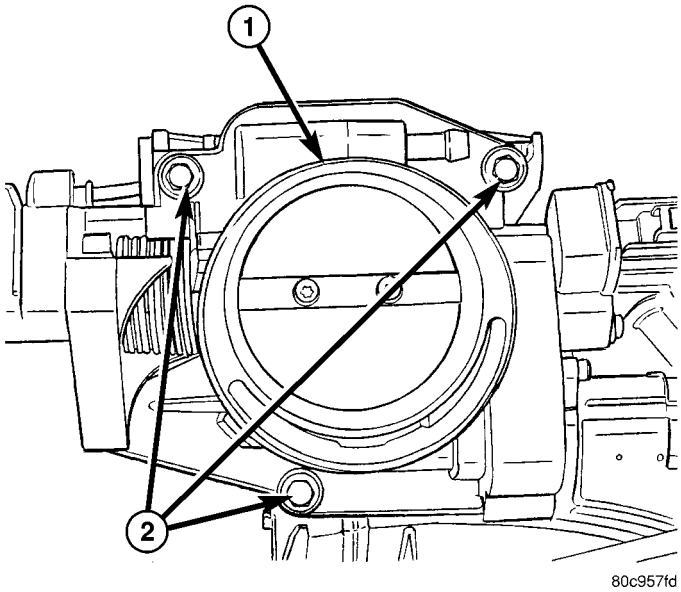

Fig. 24 THROTTLE BODY MOUNTING BOLTS - 3.7L

1 - THROTTLE BODY
2 - MOUNTING BOLTS (3)

INSTALLATION

2.4L

(1) Check condition of throttle body-to-intake manifold o-ring. Replace as necessary.

(2) Clean mating surfaces of throttle body and intake manifold.

(3) Install throttle body-to-intake manifold o-ring.

(4) Install throttle body to intake manifold.

(5) Install 3 mounting bolts. Tighten bolts to 12 N·m (105 in. lbs.) torque.

(6) Install control cables.

(7) Install electrical connectors.

(8) Install necessary vacuum lines.

(9) Install air cleaner duct at throttle body.

3.7L

(1) Check condition of throttle body-to-intake manifold o-ring. Replace as necessary.

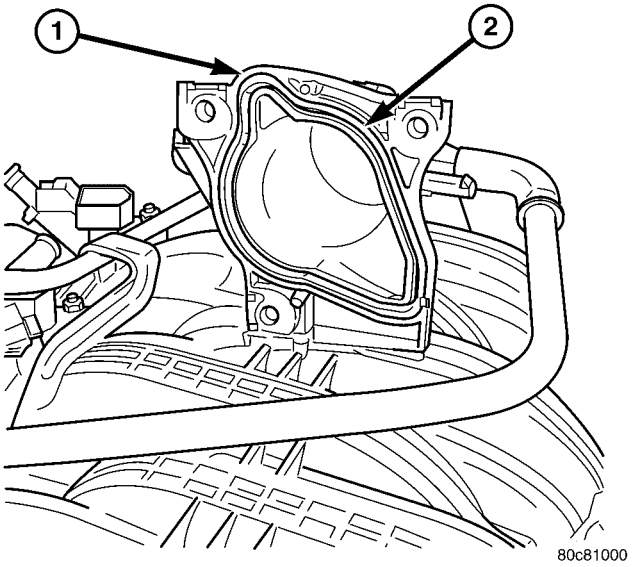

Fig. 25 THROTTLE BODY O-RING - 3.7L

1 - INTAKE MANIFOLD
2 - THROTTLE BODY O-RING

(2) Clean mating surfaces of throttle body and intake manifold.

(3) Install throttle body-to-intake manifold o-ring.

(4) Install throttle body to intake manifold.

(5) Install 3 mounting bolts. Tighten bolts to 12 N·m (105 in. lbs.) torque.

(6) Install control cables.

(7) Install electrical connectors.

(8) Install necessary vacuum lines.

(9) Install air cleaner duct at throttle body.

THROTTLE CONTROL CABLE

REMOVAL

2.4L

CAUTION: Be careful not to damage or kink the cable core wire (within the cable sheathing) while servicing accelerator pedal or throttle cable.

(1) From inside vehicle, hold up accelerator pedal. Remove plastic cable retainer (clip) and throttle cable core wire from upper end of pedal arm (Fig. 26). Plastic cable retainer snaps into top of pedal arm.

(2) Remove cable core wire at pedal arm.

(3) From inside vehicle, remove metal clip holding cable to dashpanel (Fig. 26).

(4) Remove air box at throttle body.

(5) Unsnap cable from dashpanel routing clip.

(6) Remove cable housing from dash panel and pull into engine compartment.

THROTTLE CONTROL CABLE (Continued)

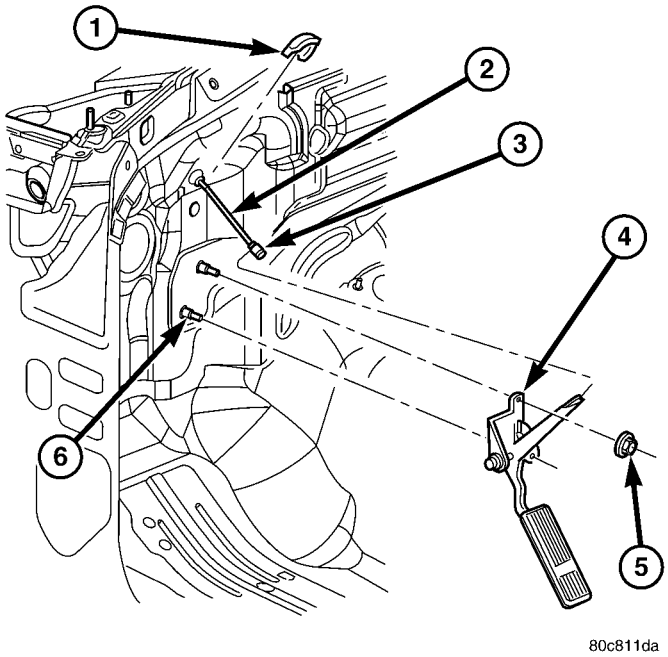

Fig. 26 ACCELERATOR PEDAL/BRACKET ASSEMBLY

1 - METAL THROTTLE CABLE CLIP
2 - THROTTLE CABLE
3 - PLASTIC CABLE RETAINER
4 - PEDAL/BRACKET ASSEMBLY
5 - PEDAL MOUNTING NUTS (2)
6 - PEDAL MOUNTING STUDS (2)

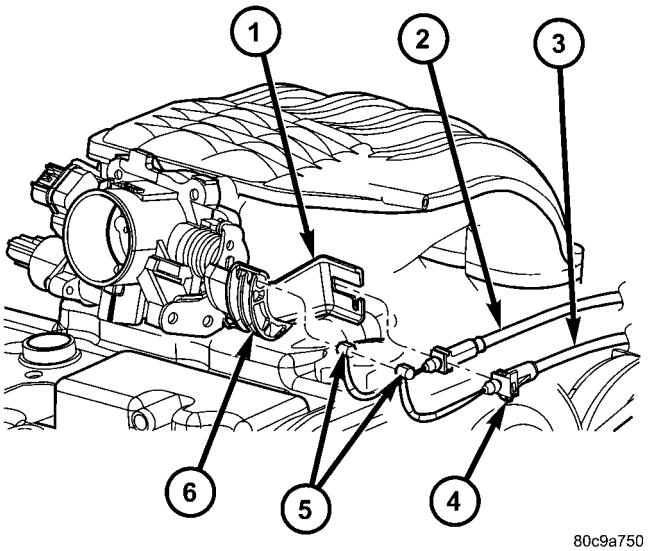

Fig. 27 THROTTLE CABLE, PIN, RELEASE TAB-2.4L

1 - MOUNTING BRACKET
2 - SPEED CONTROL CABLE
3 - THROTTLE CABLE
4 - RELEASE TAB
5 - CABLE PINS
6 - BELLCRANK

(7) Hold throttle in wide open position. While held in this position, slide throttle cable pin (Fig. 27) from throttle body bellcrank.

(8) Using a pick or small screwdriver, press release tab (Fig. 27) to release plastic cable mount from bracket. **Press on tab only enough to release cable from bracket. If tab is pressed too much, it will be broken.**To remove throttle cable from throttle body bracket, slide cable towards front of vehicle.

(9) Remove throttle cable from vehicle.

3.7L

CAUTION: Be careful not to damage or kink the cable core wire (within the cable sheathing) while servicing accelerator pedal or throttle cable.

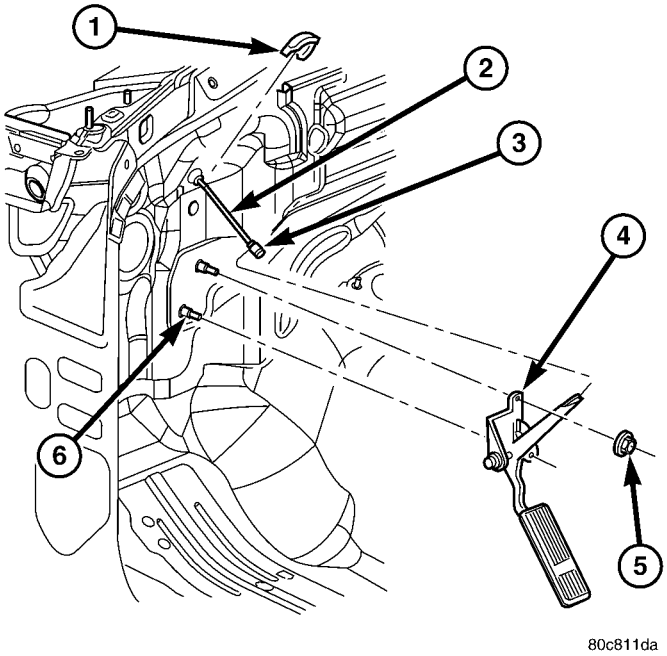

Fig. 28 ACCELERATOR PEDAL/BRACKET ASSEMBLY

1 - METAL THROTTLE CABLE CLIP
2 - THROTTLE CABLE
3 - PLASTIC CABLE RETAINER
4 - PEDAL/BRACKET ASSEMBLY
5 - PEDAL MOUNTING NUTS (2)
6 - PEDAL MOUNTING STUDS (2)

(1) From inside vehicle, hold up accelerator pedal. Remove plastic cable retainer (clip) and throttle cable core wire from upper end of pedal arm (Fig. 28). Plastic cable retainer snaps into top of pedal arm.

(2) Remove cable core wire at pedal arm.

(3) From inside vehicle, remove metal clip holding cable to dashpanel (Fig. 28).

(4) Remove air box at throttle body.

(5) Unsnap cable from dashpanel routing clip.

THROTTLE CONTROL CABLE (Continued)

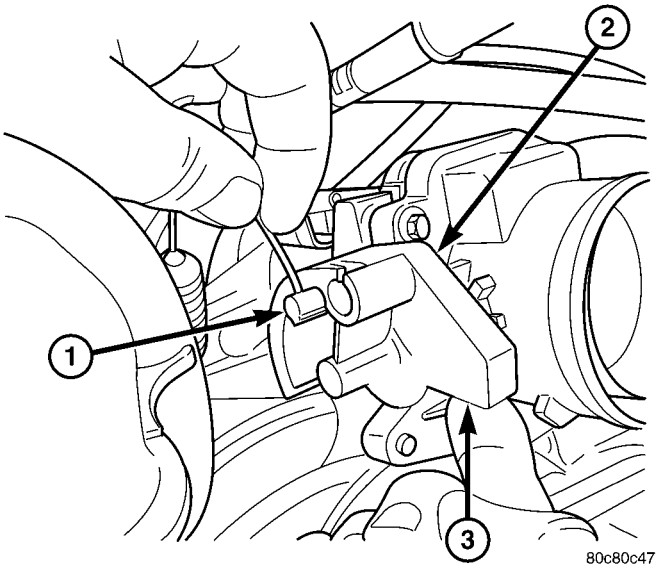

Fig. 29 THROTTLE CABLE PIN-3.7L

1 - THROTTLE CABLE PIN
2 - THROTTLE BODY BELLCRANK
3 - PUSH UP HERE

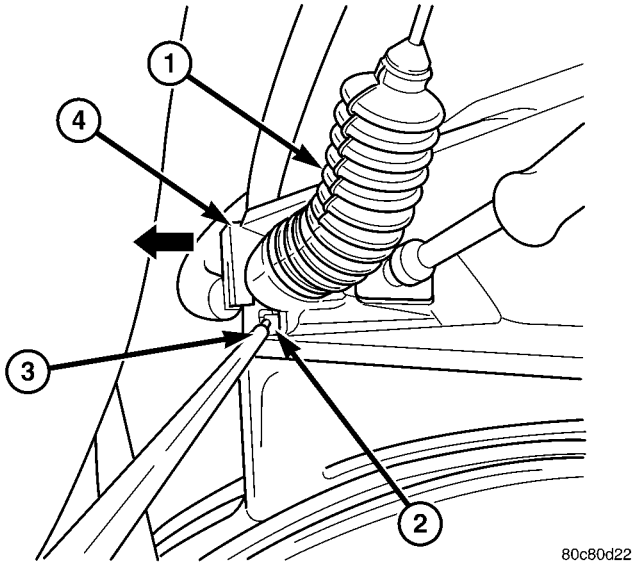

Fig. 30 THROTTLE CABLE RELEASE TAB-3.7L

1 - THROTTLE CABLE
2 - RELEASE TAB
3 - PICK OR SCREWDRIVER
4 - PLASTIC CABLE MOUNT

(6) Remove cable housing from dash panel and pull into engine compartment.

(7) Hold throttle in wide open position. While held in this position, slide throttle cable pin (Fig. 29) from throttle body bellcrank.

(8) Using a pick or small screwdriver, press release tab (Fig. 30) to release plastic cable mount from bracket. **Press on tab only enough to release cable from bracket. If tab is pressed too much, it will be broken.** Slide plastic mount (Fig. 30) towards right side of vehicle to remove throttle cable from throttle body bracket.

(9) Remove throttle cable from vehicle.

INSTALLATION

(1) Slide accelerator cable plastic mount into throttle body mounting bracket. Continue sliding until release tab (Fig. 30) is aligned to hole in mounting bracket.

(2) Hold throttle in wide open position. While held in this position, slide throttle cable pin (Fig. 29) into throttle body bellcrank.

(3) Push cable housing into rubber grommet and through opening in dash panel.

(4) From inside vehicle, install metal clip holding cable to dashpanel (Fig. 28).

(5) From inside vehicle, slide throttle cable core wire into opening (slot) in top of pedal arm.

(6) Push plastic cable retainer (clip) into pedal arm opening until it snaps in place.

(7) Install air box to throttle body.

(8) Before starting engine, operate accelerator pedal to check for any binding.

THROTTLE POSITION SENSOR

DESCRIPTION

The 3–wire Throttle Position Sensor (TPS) is mounted on the throttle body and is connected to the throttle blade shaft.

OPERATION

The 3–wire TPS provides the Powertrain Control Module (PCM) with an input signal (voltage) that represents the throttle blade position of the throttle body. The sensor is connected to the throttle blade shaft. As the position of the throttle blade changes, the output voltage of the TPS changes.

The PCM supplies approximately 5 volts to the TPS. The TPS output voltage (input signal to the PCM) represents the throttle blade position. The PCM receives an input signal voltage from the TPS. This will vary in an approximate range of from .26 volts at minimum throttle opening (idle), to 4.49 volts at wide open throttle. Along with inputs from other sensors, the PCM uses the TPS input to determine current engine operating conditions. In response to engine operating conditions, the PCM will adjust fuel injector pulse width and ignition timing.

The PCM needs to identify the actions and position of the throttle blade at all times. This information is needed to assist in performing the following calculations:

- Ignition timing advance

THROTTLE POSITION SENSOR (Continued)

- Fuel injection pulse-width
- Idle (learned value or minimum TPS)
- Off-idle (0.06 volt)
- Wide Open Throttle (WOT) open loop (2.608 volts above learned idle voltage)
- Deceleration fuel lean out
- Fuel cutoff during cranking at WOT (2.608 volts above learned idle voltage)
- A/C WOT cutoff (certain automatic transmissions only)

REMOVAL

2.4L

The Throttle Position Sensor (TPS) is mounted to the throttle body (Fig. 31).

(1) Disconnect TPS electrical connector.
(2) Remove 2 TPS mounting screws.
(3) Remove TPS.

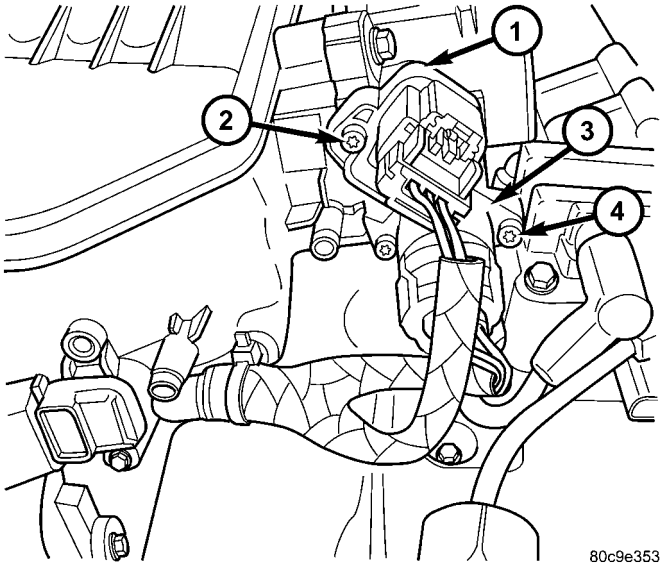

Fig. 31 TPS/IAC MOTOR - 2.4L

1 - THROTTLE POSITION SENSOR (TPS)
2 - MOUNTING SCREWS
3 - IDLE AIR CONTROL MOTOR (IAC)
4 - MOUNTING SCREWS

3.7L

The Throttle Position Sensor (TPS) is mounted to the throttle body (Fig. 32), or (Fig. 33).

(1) Disconnect TPS electrical connector.
(2) Remove 2 TPS mounting screws.
(3) Remove TPS.

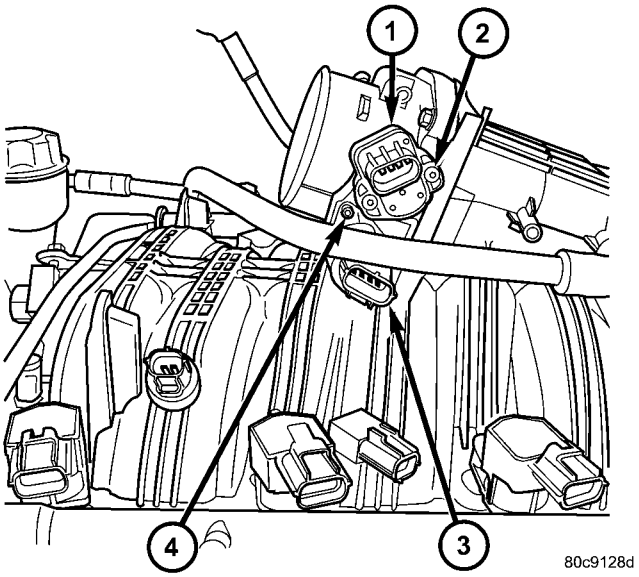

Fig. 32 TPS/IAC MOTOR - 3.7L

1 - THROTTLE POSITION SENSOR (TPS)
2 - MOUNTING SCREWS
3 - IDLE AIR CONTROL MOTOR (IAC)
4 - MOUNTING SCREWS

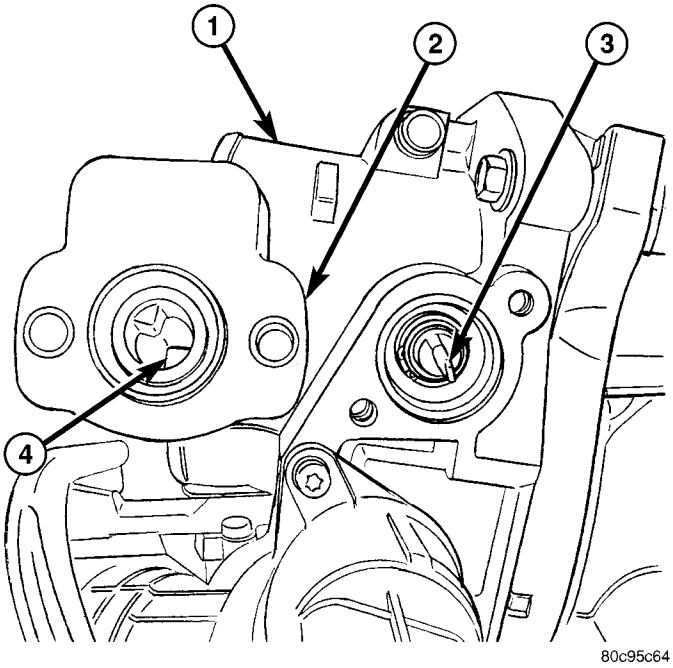

Fig. 33 TPS INSTALLATION - 3.7

1 - THROTTLE BODY
2 - TPS
3 - THROTTLE BODY SHAFT
4 - SOCKET LOCATING TANGS

THROTTLE POSITION SENSOR (Continued)

INSTALLATION

2.4L

The Throttle Position Sensor (TPS) is mounted to the rear of the throttle body.

The throttle shaft end of the throttle body slides into a socket in the TPS (Fig. 33). The TPS must be installed so that it can be rotated a few degrees. (If sensor will not rotate, install sensor with throttle shaft on other side of socket tangs). The TPS will be under slight tension when rotated.

(1) Install TPS and retaining screws.
(2) Tighten screws to 7 N·m (60 in. lbs.) torque.
(3) Connect TPS electrical connector to TPS.
(4) Manually operate throttle (by hand) to check for any TPS binding before starting engine.
(5) Install air cleaner tube to throttle body.

3.7L

The Throttle Position Sensor (TPS) is mounted to the throttle body (Fig. 32).

The throttle shaft end of the throttle body slides into a socket in the TPS (Fig. 33). The TPS must be installed so that it can be rotated a few degrees. (If sensor will not rotate, install sensor with throttle shaft on other side of socket tangs). The TPS will be under slight tension when rotated.

(1) Install TPS and retaining screws.
(2) Tighten screws to 7 N·m (60 in. lbs.) torque.
(3) Connect TPS electrical connector to TPS.
(4) Manually operate throttle (by hand) to check for any TPS binding before starting engine.
(5) Install air cleaner tube to throttle body.

FUEL DELIVERY - 2.8L DIESEL

TABLE OF CONTENTS

page

FUEL DELIVERY - 2.8L DIESEL
DESCRIPTION - DIESEL FUEL DELIVERY SYSTEM . . . 44
WARNING - HIGH FUEL SYSTEM PRESSURE . 45
DIAGNOSIS AND TESTING
FUEL SYSTEM SUPPLY . . . 45
HIGH PRESSURE FUEL LEAKS . . . 46
AIR IN FUEL SYSTEM . . . 46
FUEL SUPPLY RESTRICTIONS . . . 47
FUEL FILTER . . . 47
INJECTOR LEAK QUANTITY . . . 47
STANDARD PROCEDURE
PRIMING FUEL SYSTEM . . . 49
CLEANING FUEL SYSTEM COMPONENTS . . 49
DRAINING WATER IN FUEL . . . 49
SPECIFICATIONS - TORQUE . . . 51
SPECIAL TOOLS - DIESEL . . . 51
FUEL FILTER / WATER SEPARATOR
DESCRIPTION . . . 52
OPERATION . . . 52
REMOVAL
REMOVAL - FUEL FILTER/WATER SEPARATOR ASSEMBLY . . . 53
REMOVAL - FUEL FILTER . . . 53
INSTALLATION
INSTALLATION - FUEL FILTER / WATER SEPARATOR ASSEMBLY . . . 54
INSTALLATION - FUEL FILTER . . . 55
WATER IN FUEL SENSOR
DESCRIPTION . . . 56
OPERATION . . . 57
REMOVAL . . . 57
INSTALLATION . . . 58
FUEL RAIL
DESCRIPTION . . . 59
OPERATION . . . 59
REMOVAL . . . 60
INSTALLATION . . . 60
FUEL LINES
DESCRIPTION
DESCRIPTION . . . 61
DESCRIPTION - HIGH PRESSURE FUEL LINES . . . 61
OPERATION - HIGH PRESSURE FUEL LINES . 61
FUEL INJECTION PUMP
DESCRIPTION . . . 61
OPERATION . . . 62
REMOVAL . . . 62
INSTALLATION . . . 65
FUEL LEVEL SENDING UNIT / SENSOR
DESCRIPTION . . . 65
OPERATION . . . 65
DIAGNOSIS AND TESTING - FUEL LEVEL SENDING UNIT . . . 65
REMOVAL . . . 66
INSTALLATION . . . 66
FUEL HEATER
DESCRIPTION . . . 67
OPERATION . . . 67
REMOVAL . . . 67
INSTALLATION . . . 68
FUEL QUANTITY SOLENOID
DESCRIPTION . . . 69
OPERATION . . . 69
REMOVAL . . . 69
INSTALLATION . . . 70
FUEL TANK
REMOVAL - DIESEL . . . 70
INSTALLATION - DIESEL . . . 72
FUEL TANK MODULE
DESCRIPTION . . . 74
REMOVAL . . . 75
INSTALLATION . . . 76

FUEL DELIVERY - 2.8L DIESEL

DESCRIPTION - DIESEL FUEL DELIVERY SYSTEM

The fuel system on the 2.8L Common Rail Diesel Engine uses a fuel injection pump and an Electronic Control Module (ECM).

The fuel delivery system consists of the:

- Accelerator pedal
- Air cleaner housing/element
- Fuel filter/water separator
- Fuel temperature sensor
- Fuel heater
- Fuel rail solenoid
- Fuel rail pressure sensor
- Fuel injection pump
- Fuel injectors
- Fuel tank
- Fuel tank filler/vent tube assembly
- Fuel tank filler tube cap

FUEL DELIVERY - 2.8L DIESEL (Continued)

- Fuel tank module containing the roll over valve and a fuel gauge sending unit (fuel level sensor).
- Fuel tubes/lines/hoses
- High-pressure fuel injector lines
- Low-pressure fuel supply and return lines
- Low-pressure fuel return line
- Overflow valve
- Quantity control valve
- Quick-connect fittings
- Water draining

WARNING - HIGH FUEL SYSTEM PRESSURE

WARNING: HIGH-PRESSURE FUEL LINES DELIVER FUEL UNDER EXTREME PRESSURE FROM THE INJECTION PUMP TO THE INJECTORS. THIS MAYBE AS HIGH AS 1600BAR (23,200PSI). USE EXTREME CAUTION WHEN INSPECTING FOR HIGH-PRESSURE FUEL LEAKS. FUEL UNDER THIS AMOUNT OF PRESSURE CAN PENETRATE SKIN CAUSING PERSONAL INJURY OR DEATH. INSPECT HIGH-PRESSURE FUEL LEAKS WITH A SHEET OF CARDBOARD. WEAR SAFETY GOGGLES AND ADEQUATE PROTECTIVE CLOTHING WHEN SERVICING FUEL SYSTEM.

DIAGNOSIS AND TESTING

FUEL SYSTEM SUPPLY

NOTE: The gear rotor pump in the back of the high pressure pump, draws fuel from the tank, through the filter, to the back of the high pressure pump. The gear rotor pump is capable of drawing up to 20 in. of vacuum, depending on cranking speed. A specification of under 3 in. of vacuum reveals the high pressure pump suspect if there is no air intrusion into the fuel system.

Test Set Up Assumptions for this test are that the fuel gauge is operating properly and that there is know good fuel in the fuel tank.

- Disconnect the camshaft position sensor to prevent the vehicle from starting.
- Remove the bleeder screw on the fuel filter housing and install special tool fitting #9663 (Fig. 1).
- Connect vacuum and pressure gauge # 6828 to the #9663 fitting (Fig. 2).
- Re-prime the fuel system to remove all air (Refer to 14 - FUEL SYSTEM/FUEL DELIVERY - STANDARD PROCEDURE).
- Restrict the inlet side of the fuel filter by clamping the inlet hose close to the filter assembly.
- Crank the engine 3–4 times in 15 seconds intervals while monitoring the gauge.

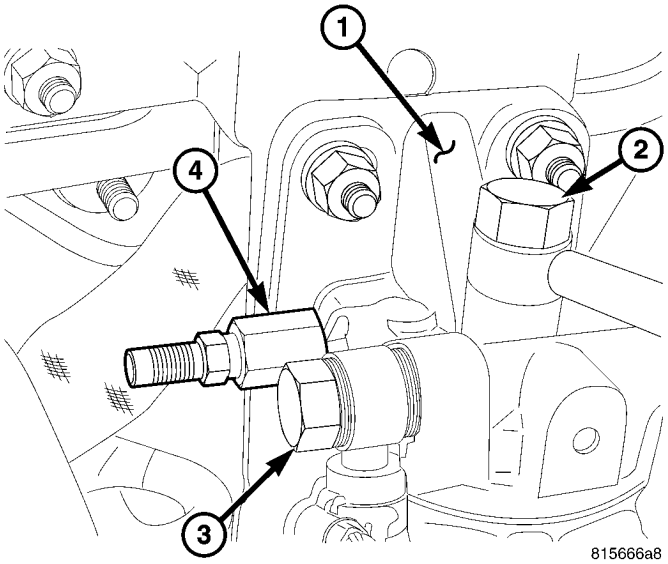

Fig. 1 SPECIAL TOOL #9663

1 - FUEL FILTER HOUSING ASSEMBLY
2 - FUEL SUPPLY TO HIGH PRESSURE PUMP
3 - FUEL SUPPLY TO FUEL FILTER HOUSING
4 - SPECIAL TOOL #9663

Results The supply pump should draw at least 3 in. of vacuum. If the supply pump was unable to reach 3 in. of vacuum, replace the high pressure pump (Refer to 14 - FUEL SYSTEM/FUEL DELIVERY/FUEL INJECTION PUMP - REMOVAL).

If the pump was able to reach 3 in. of vacuum, continue with this test.

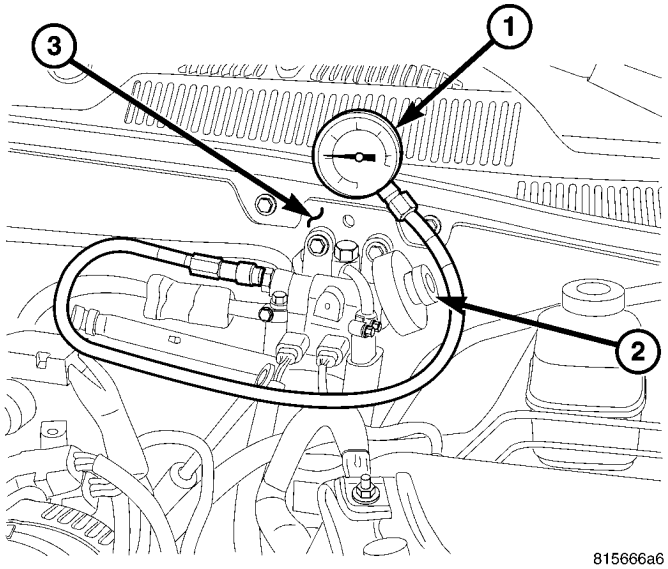

Fig. 2 SPECIAL TOOL #6828

1 - GAUGE #6828
2 - FUEL FILTER ASSEMBLY PRIMER BUTTON
3 - FUEL FILTER ASSEMBLY

FUEL DELIVERY - 2.8L DIESEL (Continued)

Pressure Test This test will check the ability of the fuel system to hold pressure.

- Reconnect the camshaft position sensor.
- Remove the clamping pliers from the fuel inlet hose.
- Pump the hand primer until 10 psi. is obtained on the pressure side of the gauge.

Will the engine start ?

Results If the engine starts, refer to the fuel filter restriction test (Refer to 14 - FUEL SYSTEM/FUEL DELIVERY - DIAGNOSIS AND TESTING).

If you were able to obtain 10 psi. with the hand primer, refer to the Crank No Start Chart in the Diagnostics manual. If you were unable to obtain 10 psi. with the hand primer, check fuel supply from tank to filter assembly. If the fuel supply is OK, replace the fuel primer/filter assembly.

HIGH PRESSURE FUEL LEAKS

WARNING: HIGH - PRESSURE LINES DELIVER DIESEL FUEL UNDER EXTREME PRESSURE FROM THE INJECTION PUMP TO THE FUEL INJECTORS. THIS MAY BE AS HIGH AS 1600BAR (23,200 PSI.). USE EXTREME CAUTION WHEN INSPECTING FOR HIGH - PRESSURE FUEL LEAKS. FUEL UNDER THIS AMOUNT OF PRESSURE CAN PENETRATE SKIN CAUSING PERSONAL INJURY OR DEATH. INSPECT FOR HIGH — PRESSURE FUEL LEAKS WITH A SHEET OF CARDBOARD. WEAR SAFETY GOGGLES AND ADEQUATE PROTECTIVE CLOTHING WHEN SERVICING FUEL SYSTEM.

High-pressure fuel leaks can cause starting problems and poor engine performance.

Carefully place a piece of cardboard over the high-pressure fuel lines or suspected area. Move your body and hands away from the area. Start the engine and run till warm. **TURN THE ENGINE OFF**. Inspect the piece of card board for witness marks. (Fig. 3). If a high-pressure line connection is leaking, replace damaged, restricted or leaking high-pressure fuel lines with the correct replacement line.

CAUTION: The high-pressure fuel lines cannot contact each other or other components. Do not attempt to weld high-pressure fuel lines or to repair lines that are damaged. Only use the recommended lines when replacement of high-pressure fuel line is necessary.

AIR IN FUEL SYSTEM

Air will enter the fuel system whenever fuel supply lines, separator filters, injection pump, high-pressure lines or injectors are removed or disconnected. Air trapped in the fuel system can result in hard starting, a rough running engine, engine misfire, low power, excessive smoke and fuel knock.

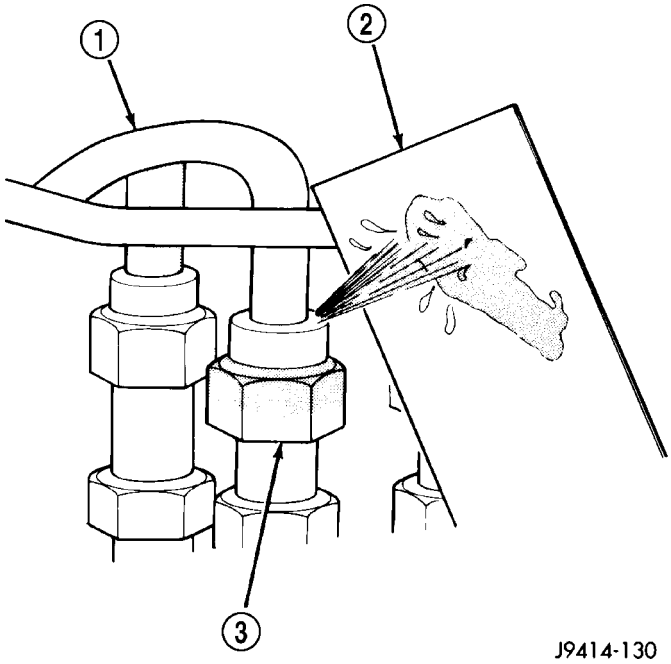

Fig. 3 Typical Test for Leaks with Cardboard

1 - HIGH-PRESSURE LINE
2 - CARDBOARD
3 - FITTING

Inspect the fuel system from the fuel tank to the injectors for loose connections (Refer to 14 - FUEL SYSTEM - WARNING). Leaking fuel is an indicator of loose connections or defective seals. Air can also enter the fuel system between the fuel tank and the fuel filter. Inspect the fuel tank and fuel lines for damage that might allow air into the system.

Trapped air or leaking lines may also be identified by placing a clear piece of fuel line between the fuel supply hose to the filter and the fuel supply hose to the high pressure pump. If a steady stream of large air bubbles are visible in the clear hose while the engine is cranking or running the air intrusion is occurring before the high pressure pump.

With the scan tool connected to the vehicle, select Engine and then select Sensor Display. Page down to view Fuel Pressure Set Point and Actual Fuel Pressure. Start the engine and observe the Fuel Pressure Set Point and the Actual Fuel Pressure. If the Actual Fuel Pressure Oscillates above and below the Fuel Pressure Set Point in a regular cycle, inspect the fuel system for air intrusion.

If the Actual Fuel Pressure gradually drops below the Fuel Pressure Set Point then spikes well above the Fuel Pressure Set Point, replace the fuel rail pressure solenoid (Refer to 14 - FUEL SYSTEM/FUEL INJECTION/FUEL PRESSURE SOLENOID - REMOVAL).

FUEL DELIVERY - 2.8L DIESEL (Continued)

FUEL SUPPLY RESTRICTIONS

LOW-PRESSURE LINES

Fuel supply line restrictions or a restricted fuel filter can cause starting problems and prevent engine from accelerating. The starting problems include; no start, longer cranking times, low power and/or white fog like exhaust.

Inspect all fuel supply lines for restrictions or blockage, including the fuel filter. Flush or replace as necessary.

HIGH-PRESSURE LINES

CAUTION: High pressure lines cannot contact each other or other components. Do not attempt to weld high-pressure fuel lines or to repair lines that are damaged. High pressure lines can be reused only after close inspection for cracks or deformation around the sealing cone. Corroded pipes must be replaced. Use only recommended lines when replacement of high-pressure fuel line is necessary.

Restricted (kinked or bent) high-pressure lines can cause starting problems, poor engine performance, engine mis-fire and white smoke from exhaust (Refer to 14 - FUEL SYSTEM - WARNING).

FUEL FILTER

Refer to the maintenance schedules for the recommended fuel filter replacement intervals (Refer to LUBRICATION & MAINTENANCE/MAINTENANCE SCHEDULES - DESCRIPTION).

The gear supply pump located in the back of the high pressure pump draws fuel from the fuel tank, through the fuel filter and into the high pressure pump. Restricted fuel filters may cause hard starting, no starting, and or white smoke.

Testing The Filter For Restrictions

- Remove the fuel filter housing bleed screw
- Install fitting, special tool #9663 in place of the bleed screw (Fig. 4).
- Connect pressure/vacuum gauge #6828 to the fitting (Fig. 5).
- Prime the fuel filter to remove any entrained air (Fig. 5).
- Start the engine and allow to idle.
- Monitor and record the vacuum reading on the gauge for 30 seconds.
- Raise the engine rpm to 1500 rpm and monitor the vacuum reading on the gauge for 30 seconds.

The vacuum on the gauge should not exceed 10 in. H.g at idle, and throughout the entire rpm range. If the vacuum reading is higher than 10 in. Hg, inspect the low pressure fuel system for restrictions such as, kinked lines or collapsed hoses, before replacing the fuel filter.

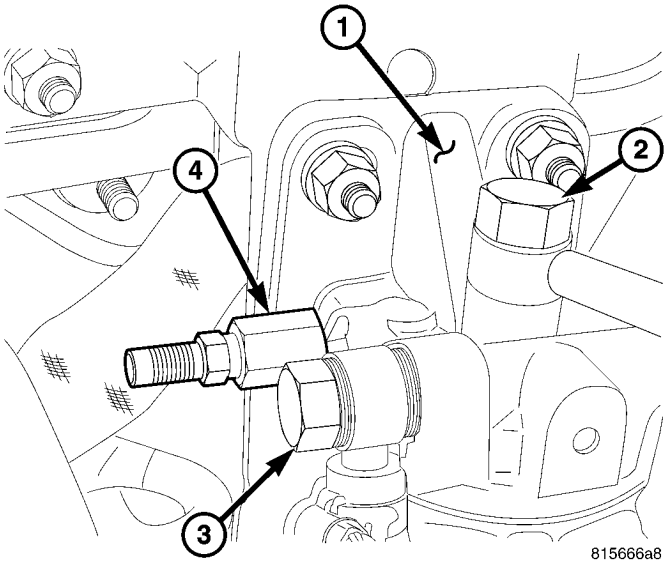

Fig. 4 SPECIAL TOOL #9663

1 - FUEL FILTER HOUSING ASSEMBLY
2 - FUEL SUPPLY TO HIGH PRESSURE PUMP
3 - FUEL SUPPLY TO FUEL FILTER HOUSING
4 - SPECIAL TOOL #9663

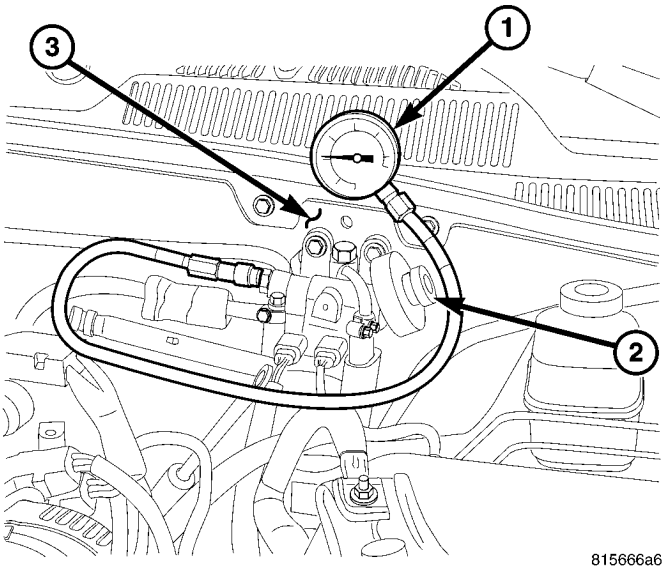

Fig. 5 SPECIAL TOOL #6828

1 - GAUGE #6828
2 - FUEL FILTER ASSEMBLY PRIMER BUTTON
3 - FUEL FILTER ASSEMBLY

INJECTOR LEAK QUANTITY

WARNING: REVIEW THE HIGH PRESSURE FUEL SYSTEM WARNING BEFORE BEGINNING SERVICE (Refer to 14 - FUEL SYSTEM - WARNING).

FUEL DELIVERY - 2.8L DIESEL (Continued)

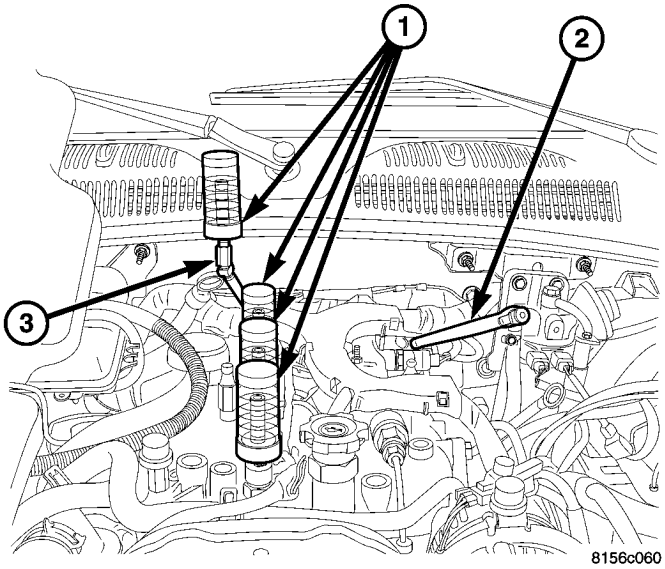

Fig. 6 INJECTOR TEST VIALS #9545

1 - TEST VIALS 9545
2 - PINCH OFF PLIERS
3 - RETURN FUEL ADAPTOR #9686

NOTE: If an injector is found to be out of specification, repeat the test procedure after the injector replacement. Hydraulic flow will take the path of least resistance and multiple failures may be identified.

Perform this test with the engine at operating temperature. This test will assist in determining a defective or internally leaking injector(s) is present by measuring the amount of fuel return.

Cranking Test

(1) Turn the ignition off.
(2) Remove the engine cover.

NOTE: DO NOT remove the return fuel line clips retaining the return line to the injector. Push IN on the clip to release the hose and then again to install the test vials.

(3) Disconnect the return fuel hose at the top of each of the injectors.

NOTE: Care must be taken not to damage the return line check valve between cylinder number four injector and the fuel rail.

(4) Block off the disconnected return fuel hose before the fuel return junction on the left rear of the cylinder head cover (Fig. 6).
(5) Disconnect the camshaft position sensor (CMP).

NOTE: Attach special tool adaptor #9686 to the #4 injector and fill with clean diesel fuel to purge the air from the adaptor, then install the test vial onto the adaptor.

(6) Install the test vials onto the injectors and secure with the return hose clips (Fig. 6).
(7) Crank the engine for ten seconds while monitoring each inner test vial.
(8) Evaluate the individual return quantities.

The maximum permissible difference between the return quantity of the individual injectors and the injector with the highest return quantity is 3 graduation marks in the small vial.

Injector	Graduated Vial Mark	Content
1	4 marks, small vial	4 ml
2	1 mark, small vial	1 ml
3	1 mark, small vial	1 ml
4	1/2 mark, small vial	0.5 ml

Evaluation Injector #1 has excessive fuel return quantity, replace the injector. Injectors #2, #3, #4 are OK.

(9) Perform the cranking test after the repair to assure no other injectors are identified.

Engine Running

(1) Start the engine with the test vials in place (Fig. 6).
(2) Run the engine until the top mark on one of the large graduated vials is obtained.
(3) Turn engine off immediately.
(4) Evaluate the individual return quantities.

The maximum permissible difference between return quantities of the individual injectors, and the injector with the highest return quantity, is 3 graduation marks.

Injector	Graduated Vial Mark	Content
1	5 marks, large vial	42 ml
2	2 mark, large vial	21 ml
3	2 mark, large vial	21 ml
4	Surround, large vial	8 ml

Evaluation Injector #1 has excessive return quantity, replace the injector. Injectors #2, #3, #4 are OK.

FUEL DELIVERY - 2.8L DIESEL (Continued)

(5) Perform the running test again after the repair to assure no other injectors are identified.

If the injectors pass the quantity test, continue with the diagnostic manual.

STANDARD PROCEDURE

PRIMING FUEL SYSTEM

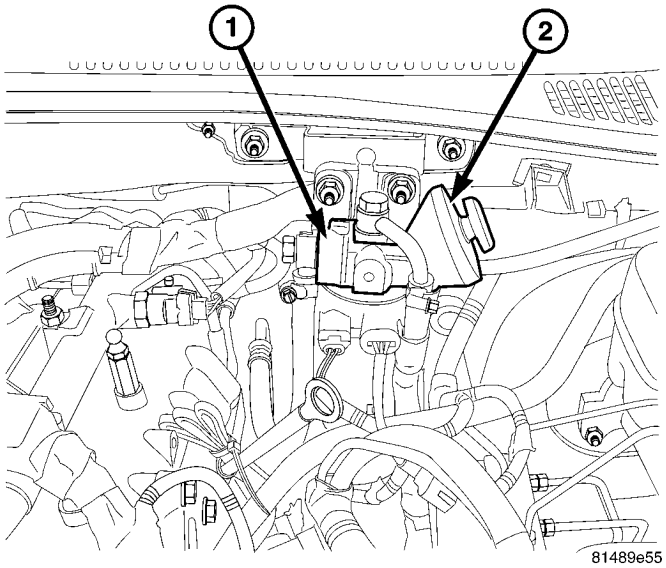

Fig. 7 FUEL SYSTEM PRIMER

1 - FUEL FILTER AND HOUSING ASSEMBLY
2 - PRIMER BUTTON

CAUTION: Cranking the engine for an extended period with out a fuel supply may result in damage to the high pressure fuel pump. DO NOT force the plunger when priming the fuel system. Damage to the plunger or fuel filter/water separate will result.

NOTE: Should the vehicle run out of fuel, the fuel system must be re-primed in order to start. Factors such as temperature, how long the vehicle has been sitting, and engine cranking speed will influence how quickly the engine starts. If the water in fuel light is illuminated in the instrument panel, refer to the water in fuel sensor for draining procedure.

The fuel system must be primed if the fuel system has been serviced. This is done using the fuel primer button located at the top of the fuel filter/water separator.

(1) With service completed on the fuel system.

(2) Depress the fuel primer 20 consecutive times then open the bleeder screw on top of the housing to dispel trapped air (Fig. 7).

(3) Close the bleeder screw and continue the step above until the primer button becomes slightly harder to depress.

(4) Turn the ignition to START and crank the engine a maximum of ten seconds.

NOTE: If the engine does not start with in ten seconds, repeat the priming procedure. The engine will typically start within ten seconds; the engine may idle, idle rough, or stall, purging any trapped air from the lines and filter.

(5) Tighten bleeder screw to 10.8 N·m (96 in.lbs.).

CLEANING FUEL SYSTEM COMPONENTS

CAUTION: Cleanliness cannot be overemphasized when handling or replacing diesel fuel system components. This especially includes the fuel injectors, high-pressure fuel lines, fuel rail, and fuel injection pump. Very tight tolerances are used with these parts. Dirt contamination could cause rapid part wear and possible plugging of fuel injector nozzle tip holes. This in turn could lead to possible engine misfire. Always wash/clean any fuel system component thoroughly before disassembly and then air dry. DO NOT wire brush injector nozzles when cleaning. Cap or cover any open part after disassembly. Before assembly, examine each part for dirt, grease or other contaminants and clean if necessary. When installing new parts, lubricate them with clean engine oil or clean diesel fuel only.

DRAINING WATER IN FUEL

WARNING: STORE FUEL IN APPROVED AND PROPERLY MARKED CONTAINERS. WEAR SAFETY GOGGLES AND ADEQUATE PROTECTIVE CLOTHING WHEN SERVICING FUEL SYSTEM.

(1) Disconnect the negative battery cable.

(2) Disconnect the water in fuel (WIF) wiring harness connector located under the fuel filter (Fig. 8).

(3) Connect a drain hose to the WIF sensor.

(4) Place the other end of the drain hose in a approved and properly marked container.

(5) Open the bleed screw on top of the fuel filter housing.

(6) Loosen the WIF sensor on the bottom of the fuel filter to begin draining.

(7) Allow the filter to drain into the container until fuel is visible.

(8) Tighten the WIF sensor, remove the drain hose and clean any spillage.

(9) Tighten the bleeder screw on top of the fuel filter housing.

FUEL DELIVERY - 2.8L DIESEL (Continued)

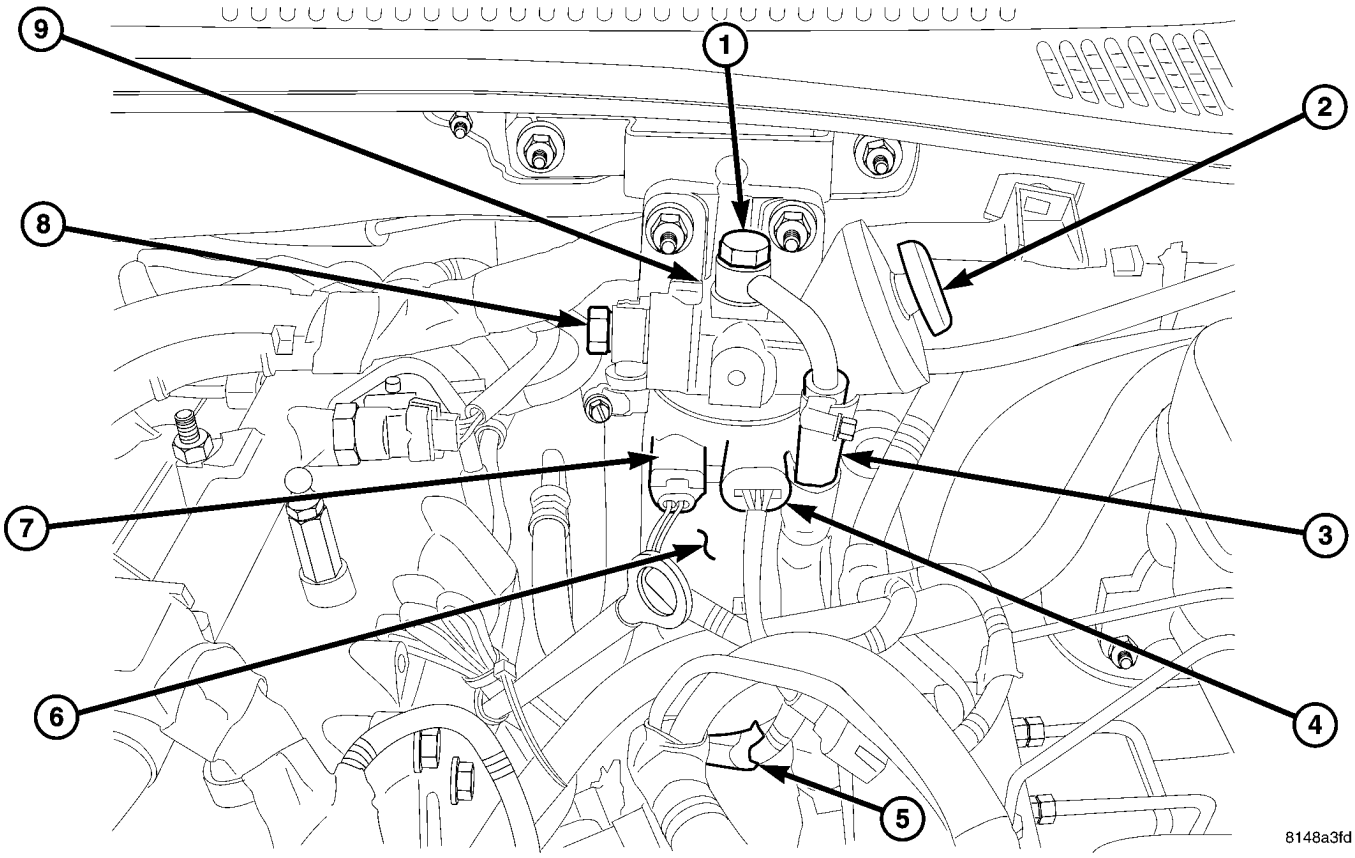

Fig. 8 FUEL FILTER/WATER SEPARATOR

1 - FUEL FILTER ASSEMBLY
2 - PRIMER BUTTON
3 - FUEL SUPPLY TO HIGH PRESSURE PUMP
4 - FUEL HEATER
5 - WIF SENSOR
6 - FUEL FILTER
7 - FUEL TEMPERATURE SENSOR
8 - FUEL SUPPLY FROM TANK
9 - AIR BLEED SCREW

(10) Connect the WIF wiring harness connector.
(11) Connect the negative battery cable.

FUEL DELIVERY - 2.8L DIESEL (Continued)

SPECIFICATIONS - TORQUE

2.8L DIESEL - TORQUE SPECIFICATIONS

DESCRIPTION	N·m	Ft. Lbs.	In. Lbs.
Camshaft Position Sensor Bolt	10.8	—	96
Crankshaft Position Sensor Bolt	10.8	—	96
Crankshaft Position Sensor Shield Bolt	11.8	—	104
Boost Pressure / Intake Air Temperature Sensor Bolts	4.9	—	43
Return Fuel Junction Block at Intake Manifold	10.8	—	96
Fuel Filter	18	—	159
High Pressure Injection Pump Nuts	24.4	18	—
Fuel Line Fittings at Pump	27.5	21	—
Fuel Line Fittings at Filter Housing	30	22	—
High Pressure Injection Pump Sprocket Nut	88.3	65	—
Fuel Injector Retaining Bolts	32.4	24	—
High Pressure Fuel Lines	28	20	247
Fuel Rail Bolts	24.5	18	—
Fuel Pressure Sensor	35	26	—
Water In Fuel Sensor	1.2	—	10

SPECIAL TOOLS - DIESEL

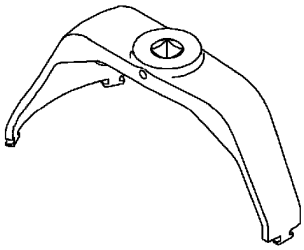

LOCKRING REMOVER/INSTALLER 9340

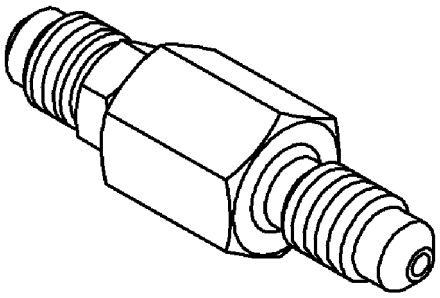

FITTING 9663

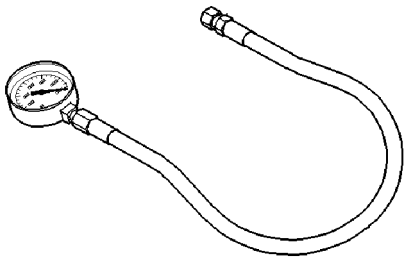

VACUUM AND PRESSURE GAUGE 6828

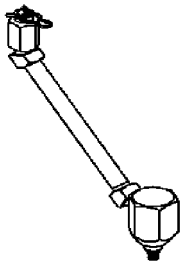

ADAPTOR 9686

FUEL FILTER / WATER SEPARATOR

DESCRIPTION

The fuel filter/water separator assembly is located in the left rear corner of the engine compartment. It incorporates the fuel system prime button, bleed screw, fuel temperature sensor, fuel heater and a water in fuel (WIF) sensor. Only the fuel filter canister and the WIF sensor are serviced separately. The fuel filter has a 3 micron element and tightens clockwise to the housing. (Fig. 9).

OPERATION

The fuel filter/water separator protects the high pressure fuel injection pump by removing water and contaminants from the fuel with a three micron filter element. The construction of the filter/separator allows fuel to pass through it, but helps prevent moisture (water) from doing so. Moisture collects at the bottom of the canister.

Refer to the maintenance schedules for the recommended fuel filter replacement intervals.

For draining of water from canister, (Refer to 14 - FUEL SYSTEM - STANDARD PROCEDURE).

A Water-In-Fuel (WIF) sensor is attached to the fuel filter and serviced separately. Refer to Water-In-Fuel Sensor Description/Operation.

The fuel heater and fuel temperature sensor are part of the fuel filter assembly head and not serviced separately from the head.

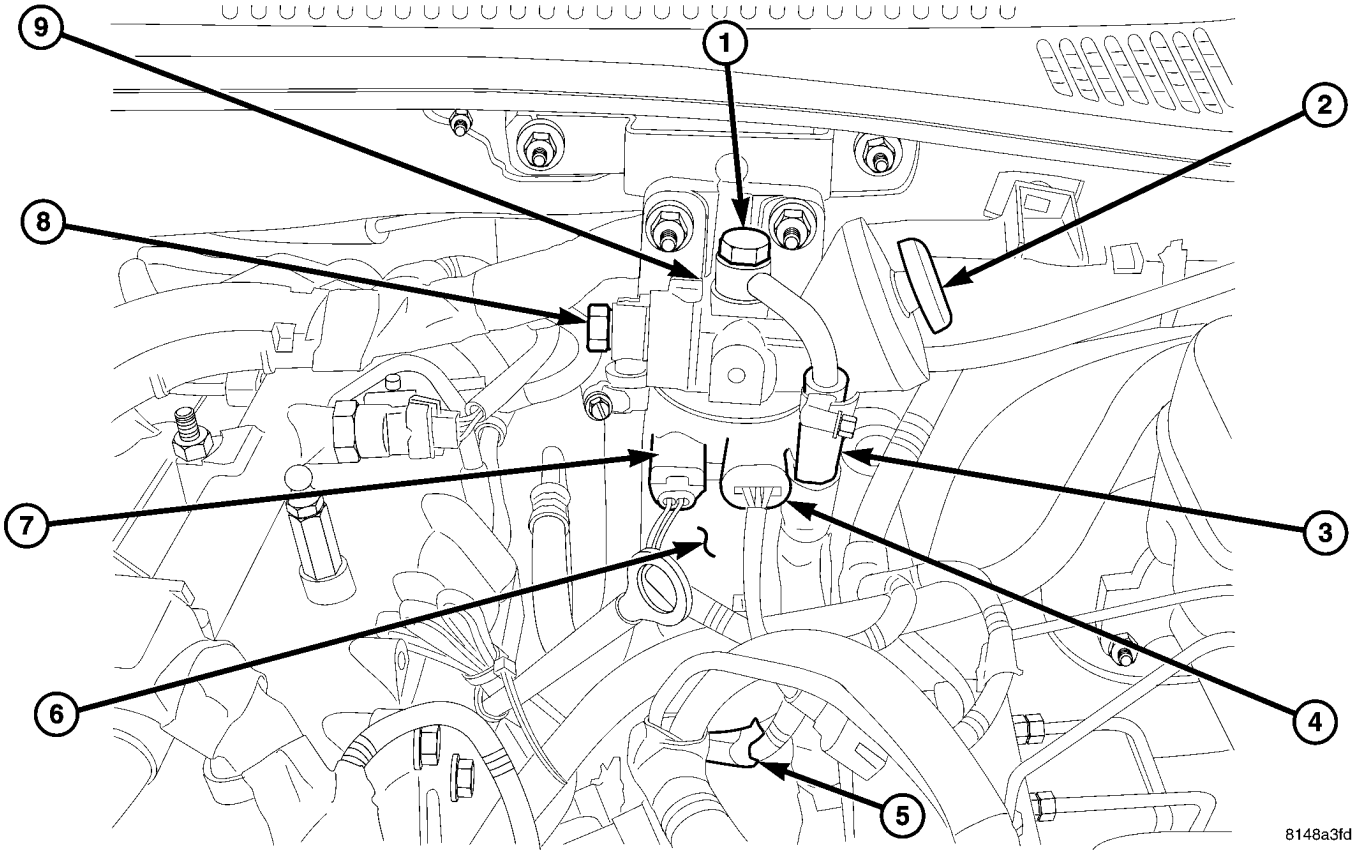

Fig. 9 FUEL FILTER/WATER SEPARATOR

1 - FUEL FILTER ASSEMBLY
2 - PRIMER BUTTON
3 - FUEL SUPPLY TO HIGH PRESSURE PUMP
4 - FUEL HEATER
5 - WIF SENSOR
6 - FUEL FILTER
7 - FUEL TEMPERATURE SENSOR
8 - FUEL SUPPLY FROM TANK
9 - AIR BLEED SCREW

FUEL FILTER / WATER SEPARATOR (Continued)

REMOVAL

REMOVAL - FUEL FILTER/WATER SEPARATOR ASSEMBLY

WARNING: STORE FUEL IN APPROVED AND PROPERLY MARKED CONTAINERS. WEAR SAFETY GOGGLES AND ADEQUATE PROTECTIVE CLOTHING WHEN SERVICING FUEL SYSTEM.

(1) Disconnect negative battery cable.
(2) Drain fuel filter/water separator assembly (Refer to 14 - FUEL SYSTEM - STANDARD PROCEDURE)

NOTE: DO NOT loosen the banjo bolt fittings. Loosen the fuel hose clamps and remove hoses from the fuel lines.

(3) Remove two fuel lines from the water separator (Fig. 10). Loosen retaining clamps and slide the hose from barbed fittings (Fig. 10).
(4) Disconnect the fuel heater and temperature sensor harness connectors.
(5) Remove the fuel filter/water separator assembly from the engine cowl (Fig. 10).

REMOVAL - FUEL FILTER

NOTE: Capture all fuel in approved and appropriately marked containers. Wear safety goggles and adequate protective clothing when servicing the fuel system.

(1) Disconnect the negative battery cable.
(2) Disconnect the water in fuel (WIF) sensor wiring harness connector.
(3) Drain the fuel filter/water separator (Refer to 14 - FUEL SYSTEM - STANDARD PROCEDURE).
(4) Unscrew the filter assembly from the head assembly by rotating the housing counterclockwise.
(5) Separate the WIF sensor and seal from the housing by rotating counterclockwise.

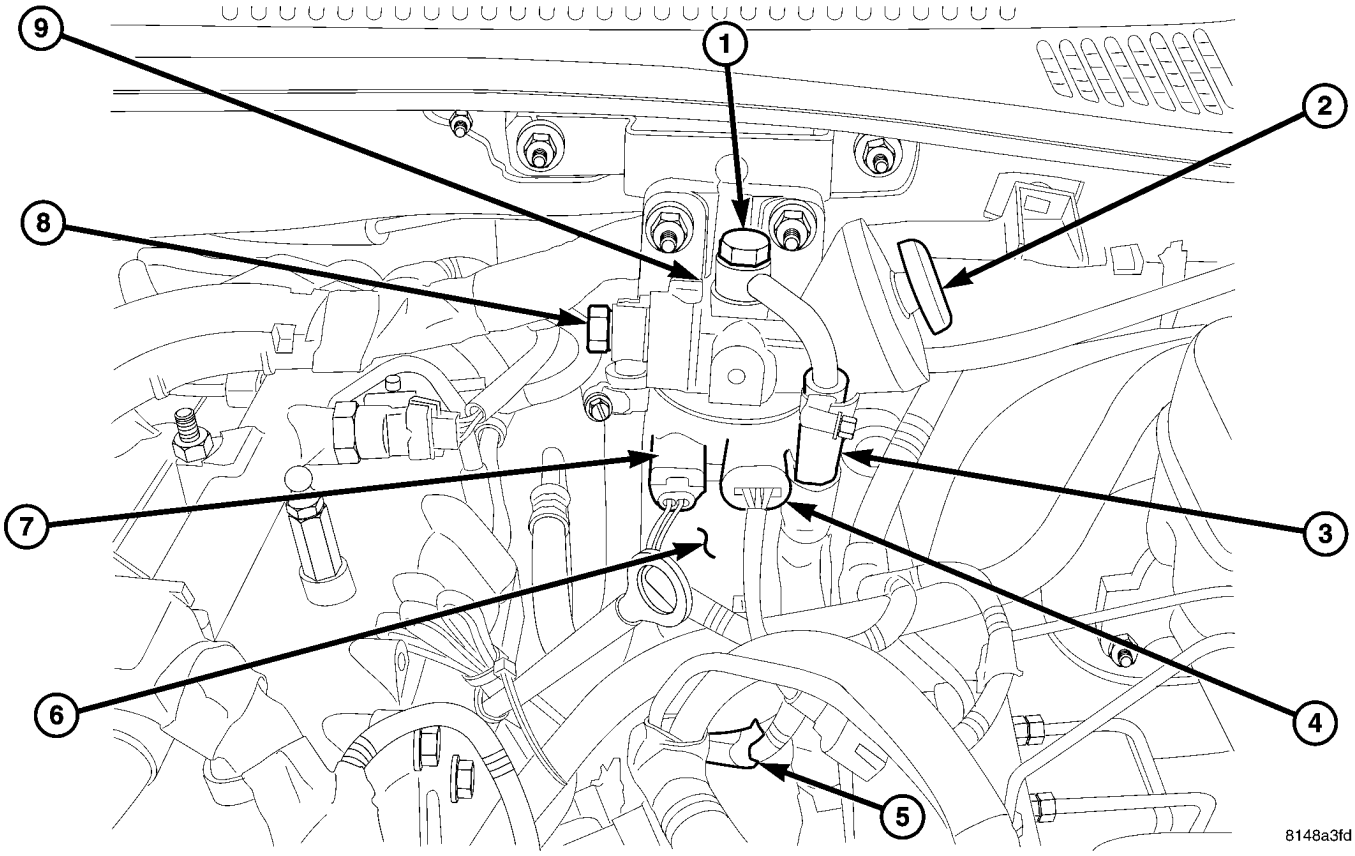

Fig. 10 FUEL FILTER/WATER SEPARATOR

1 - FUEL FILTER ASSEMBLY
2 - PRIMER BUTTON
3 - FUEL SUPPLY TO HIGH PRESSURE PUMP
4 - FUEL HEATER
5 - WIF SENSOR
6 - FUEL FILTER
7 - FUEL TEMPERATURE SENSOR
8 - FUEL SUPPLY FROM TANK
9 - AIR BLEED SCREW

FUEL FILTER / WATER SEPARATOR (Continued)

INSTALLATION

INSTALLATION - FUEL FILTER / WATER SEPARATOR ASSEMBLY

(1) Carefully position fuel water separator over the mounting studs, install fasteners and tighten to 24.5 N·m (18 ft. lbs.).

NOTE: Make sure the fuel supply hose to the high pressure pump is mounted to the left side of the filter assembly.

(2) Install the fuel lines to the housing assembly. tighten hose clamps to 7 N·m (62 in.lbs.) (Fig. 11).

(3) Connect the water in fuel, fuel temperature sensor and the fuel heater electrical connectors (Fig. 11).

(4) Prime fuel system (Refer to 14 - FUEL SYSTEM - STANDARD PROCEDURE).

(5) Connect negative battery cable.

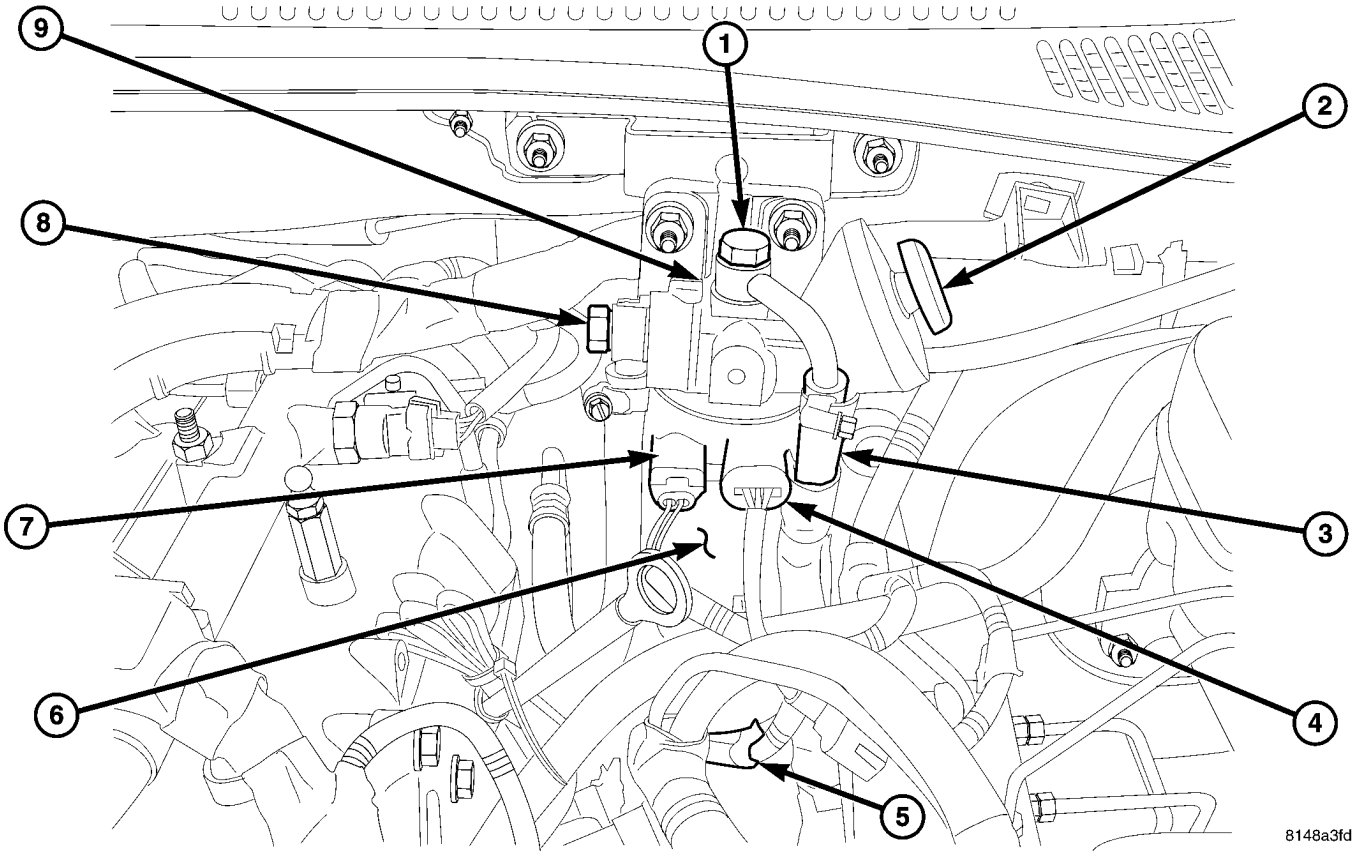

Fig. 11 FUEL FILTER/WATER SEPARATOR

1 - FUEL FILTER ASSEMBLY
2 - PRIMER BUTTON
3 - FUEL SUPPLY TO HIGH PRESSURE PUMP
4 - FUEL HEATER
5 - WIF SENSOR
6 - FUEL FILTER
7 - FUEL TEMPERATURE SENSOR
8 - FUEL SUPPLY FROM TANK
9 - AIR BLEED SCREW

FUEL FILTER / WATER SEPARATOR (Continued)

INSTALLATION - FUEL FILTER

(1) Lubricate the fuel filter seal with clean diesel fuel.

(2) Install the water in fuel (WIF) sensor hand tight (Fig. 12).

(3) Screw filter assembly onto the fuel filter/water separator head. Tighten filter to 18 N·m (118 in. lbs.) (Fig. 12).

(4) Connect the WIF wiring harness connector.

(5) Prime the fuel system (Refer to 14 - FUEL SYSTEM - STANDARD PROCEDURE).

(6) Start the engine and allow to warm.

(7) Turn engine off and inspect for leaks.

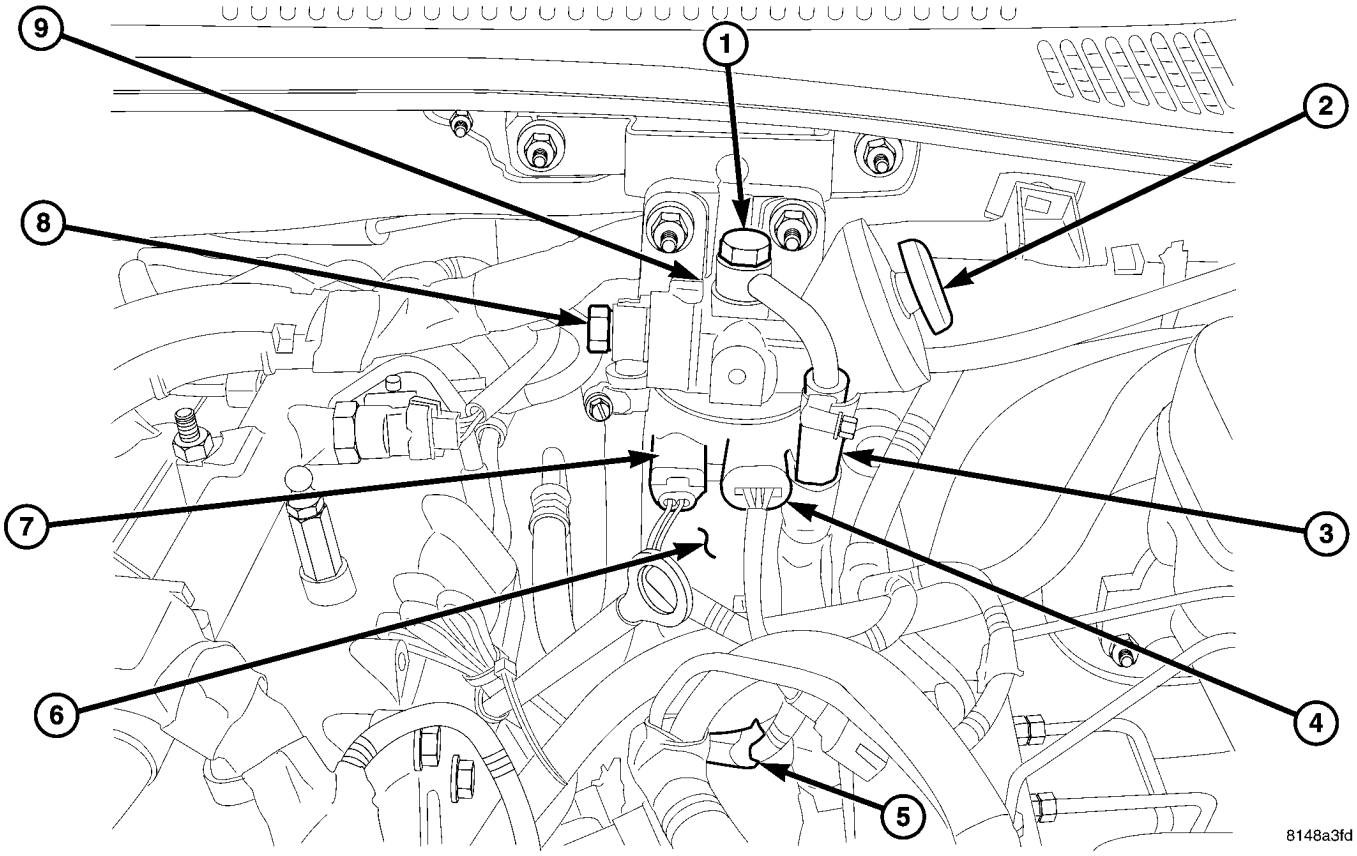

Fig. 12 FUEL FILTER/WATER SEPARATOR

1 - FUEL FILTER ASSEMBLY
2 - PRIMER BUTTON
3 - FUEL SUPPLY TO HIGH PRESSURE PUMP
4 - FUEL HEATER
5 - WIF SENSOR
6 - FUEL FILTER
7 - FUEL TEMPERATURE SENSOR
8 - FUEL SUPPLY FROM TANK
9 - AIR BLEED SCREW

WATER IN FUEL SENSOR

DESCRIPTION

The WIF sensor is located in the bottom of the fuel filter/water separator. The sensor also has a drain channel and a protrusion for adapting a hose during draining (Fig. 13).

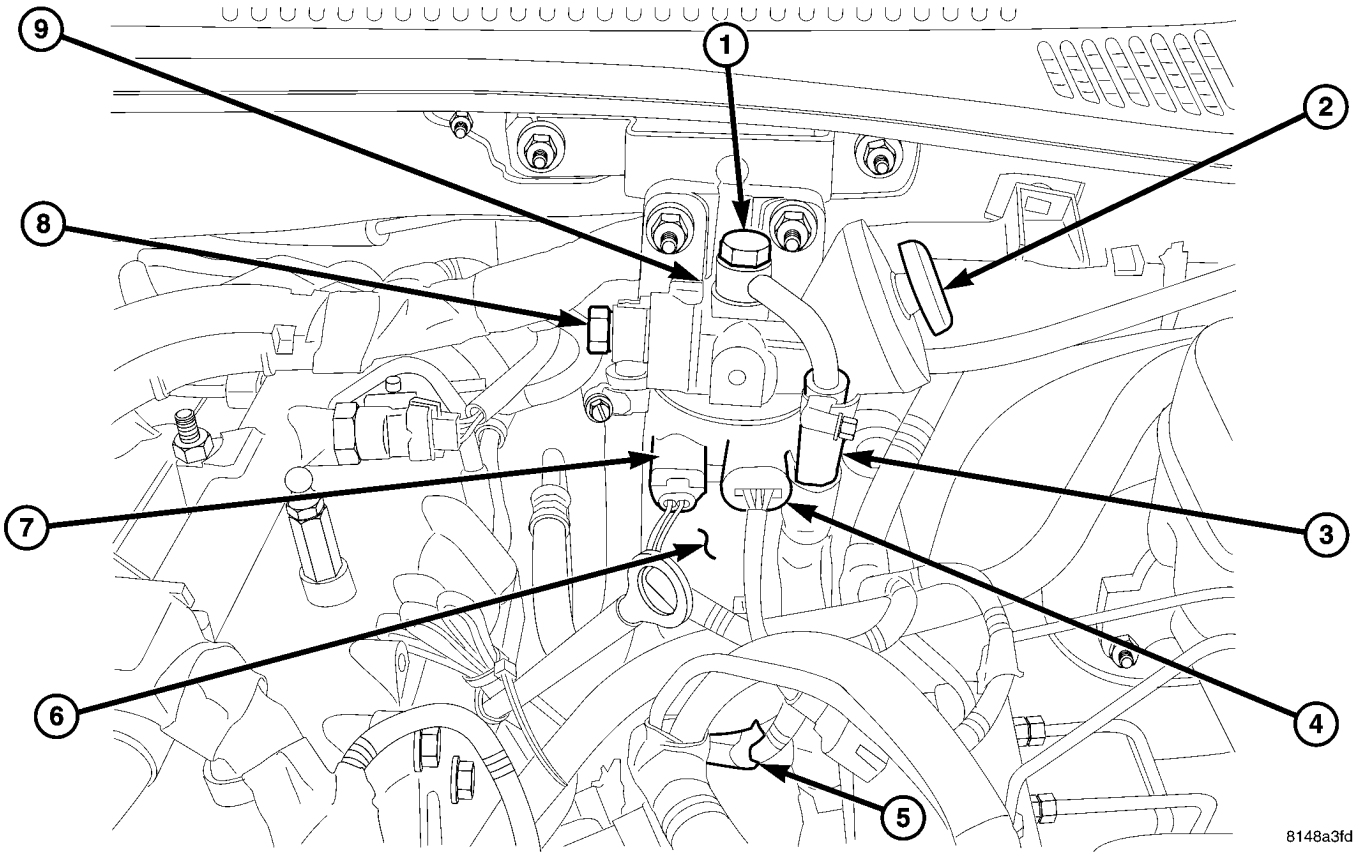

Fig. 13 FUEL FILTER/WATER SEPARATER

1 - FUEL FILTER ASSEMBLY
2 - PRIMER BUTTON
3 - FUEL SUPPLY TO HIGH PRESSURE PUMP
4 - FUEL HEATER
5 - WIF SENSOR
6 - FUEL FILTER
7 - FUEL TEMPERATURE SENSOR
8 - FUEL SUPPLY FROM TANK
9 - AIR BLEED SCREW

WATER IN FUEL SENSOR (Continued)

OPERATION

The sensor sends an input to the Engine Control Module (ECM) when it senses water in the fuel filter/water separator. As the water level in the filter/separator increases, the resistance across the WIF sensor decreases. This decrease in resistance is sent as a signal to the ECM and compared to a high water standard value. Once the value reaches 30 to 40 kilohms, the ECM will activate the water-in-fuel warning lamp. This all takes place when the ignition key is initially put in the ON position.

REMOVAL

(1) Disconnect negative battery cable.

(2) Disconnect WIF sensor electrical connector (Fig. 14).

(3) Drain fuel filter/water separator assembly by loosening the WIF at bottom of fuel filter and opening the bleeder screw on top of the filter/separator. (Refer to 14 - FUEL SYSTEM - STANDARD PROCEDURE).

(4) Unscrew WIF sensor from fuel filter/water separator assembly.

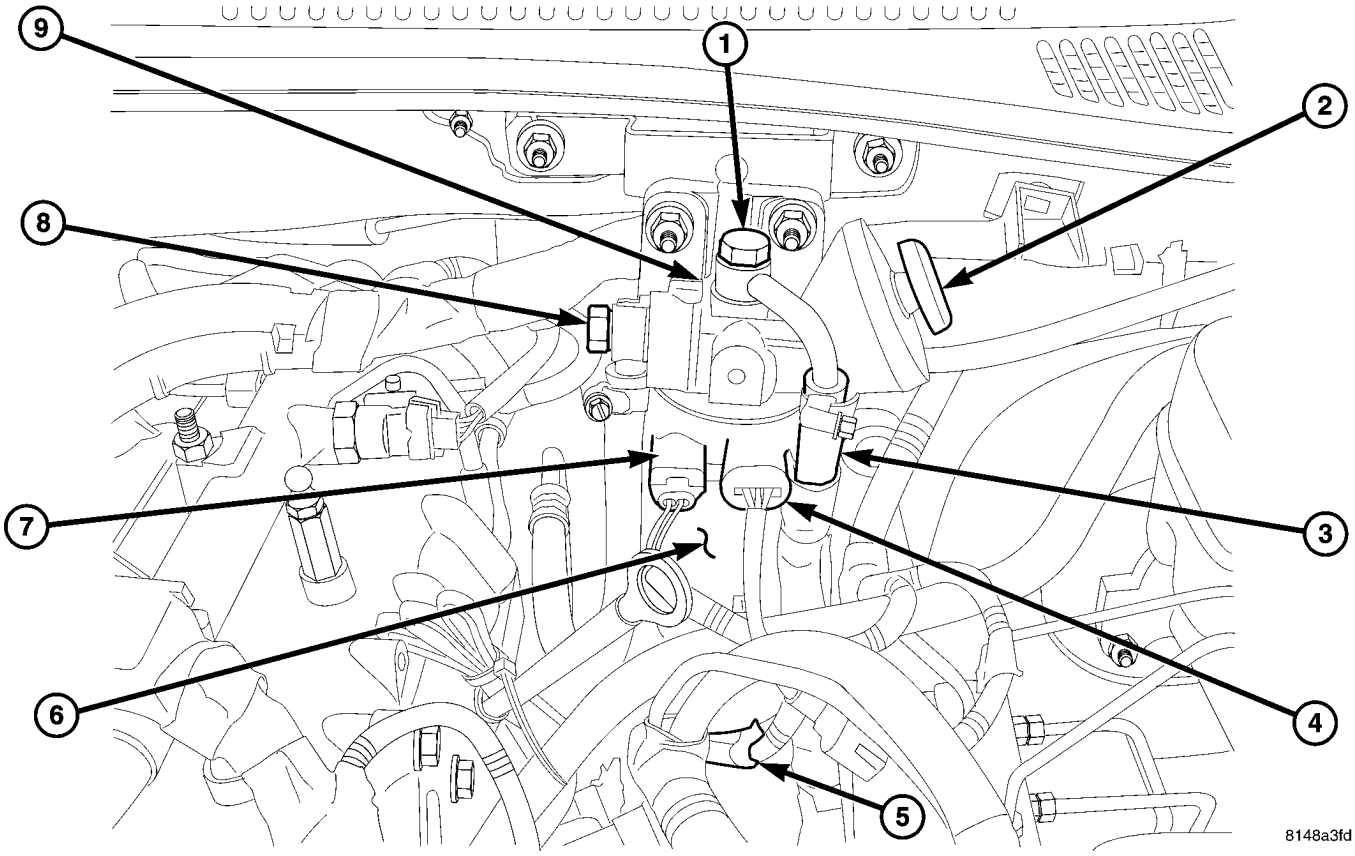

Fig. 14 FUEL FILTER/WATER SEPARATER

1 - FUEL FILTER ASSEMBLY
2 - PRIMER BUTTON
3 - FUEL SUPPLY TO HIGH PRESSURE PUMP
4 - FUEL HEATER
5 - WIF SENSOR
6 - FUEL FILTER
7 - FUEL TEMPERATURE SENSOR
8 - FUEL SUPPLY FROM TANK
9 - AIR BLEED SCREW

WATER IN FUEL SENSOR (Continued)

INSTALLATION

(1) Install WIF sensor with new seal into fuel filter hand tight.

(2) Connect WIF sensor electrical connector (Fig. 15).

(3) Prime fuel system using fuel priming diaphragm (Refer to 14 - FUEL SYSTEM - STANDARD PROCEDURE).

(4) Connect negative battery cable.

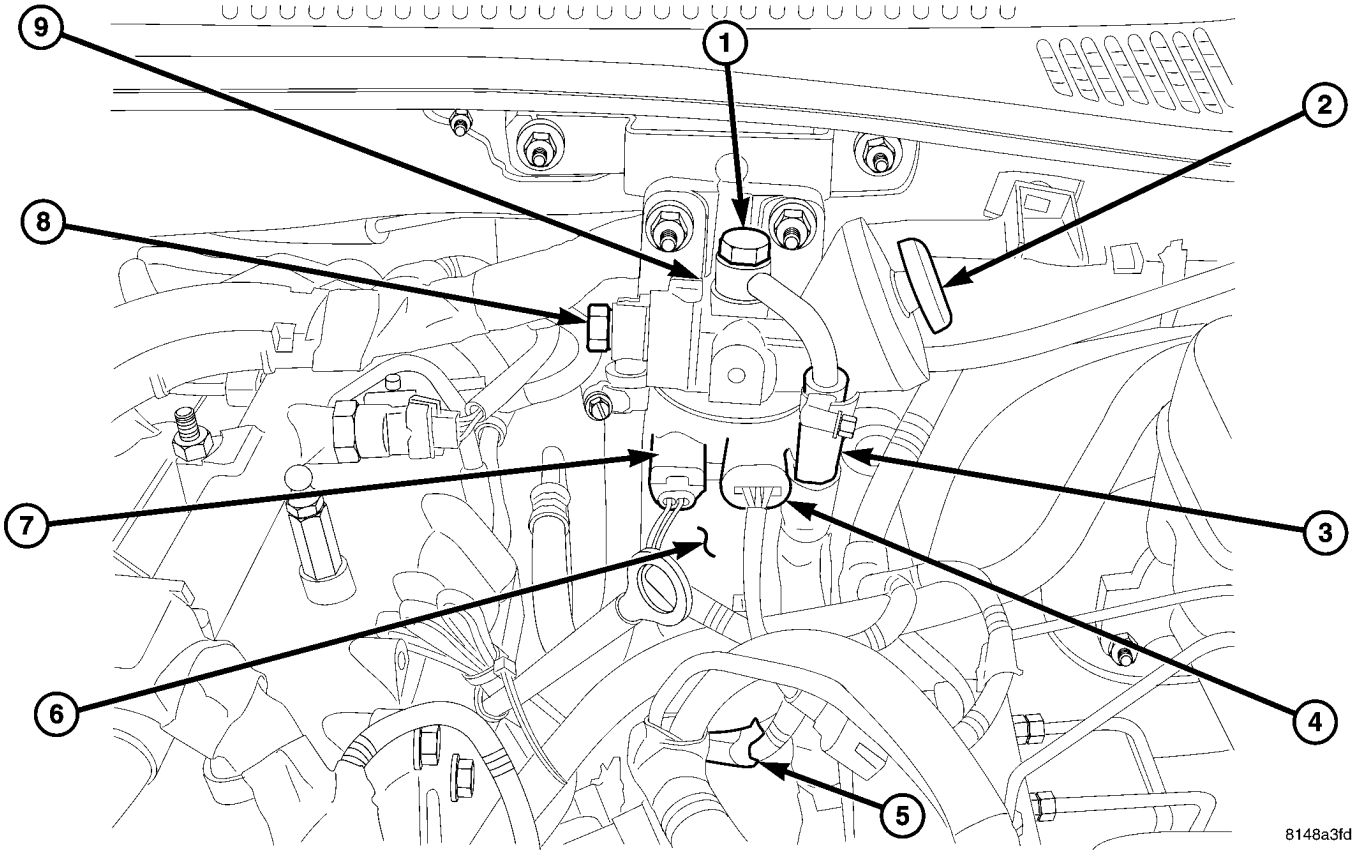

Fig. 15 FUEL FILTER/WATER SEPARATOR

1 - FUEL FILTER ASSEMBLY
2 - PRIMER BUTTON
3 - FUEL SUPPLY TO HIGH PRESSURE PUMP
4 - FUEL HEATER
5 - WIF SENSOR
6 - FUEL FILTER
7 - FUEL TEMPERATURE SENSOR
8 - FUEL SUPPLY FROM TANK
9 - AIR BLEED SCREW

FUEL RAIL

DESCRIPTION

WARNING: HIGH - PRESSURE FUEL LINE DELIVER DIESEL FUEL UNDER EXTREME PRESSURE FROM THE INJECTION PUMP TO THE FUEL INJECTORS. THIS MAY BE AS HIGH AS 1600BAR (23,200PSI). USE EXTREME CAUTION WHEN INSPECTING FOR HIGH - PRESSURE FUEL LEAKS. FUEL UNDER THIS AMOUNT OF PRESSURE CAN PENETRATE SKIN CAUSING PERSONAL INJURY OR DEATH. INSPECT FOR HIGH - PRESSURE LEAKS WITH A SHEET OF CARDBOARD. WEAR SAFETY GOGGLES AND ADEQUATE PROTECTIVE CLOTHING WHEN SERVICING FUEL SYSTEM.

The fuel rail is mounted to the cylinder head cover/ intake manifold. The rail supplies constant high fuel pressure to the fuel injectors (Fig. 16).

OPERATION

WARNING: HIGH - PRESSURE LINES DELIVER DIESEL FUEL UNDER EXTREME PRESSURE FROM THE INJECTION PUMP TO THE FUEL INJECTORS. THIS MAY BE AS HIGH AS 1600BAR (23,200 PSI.). USE EXTREME CAUTION WHEN INSPECTING FOR HIGH - PRESSURE FUEL LEAKS. FUEL UNDER THIS AMOUNT OF PRESSURE CAN PENETRATE SKIN CAUSING PERSONAL INJURY OR DEATH. INSPECT FOR HIGH — PRESSURE FUEL LEAKS WITH A SHEET OF CARDBOARD. WEAR SAFETY GOGGLES AND ADEQUATE PROTECTIVE CLOTHING WHEN SERVICING FUEL SYSTEM.

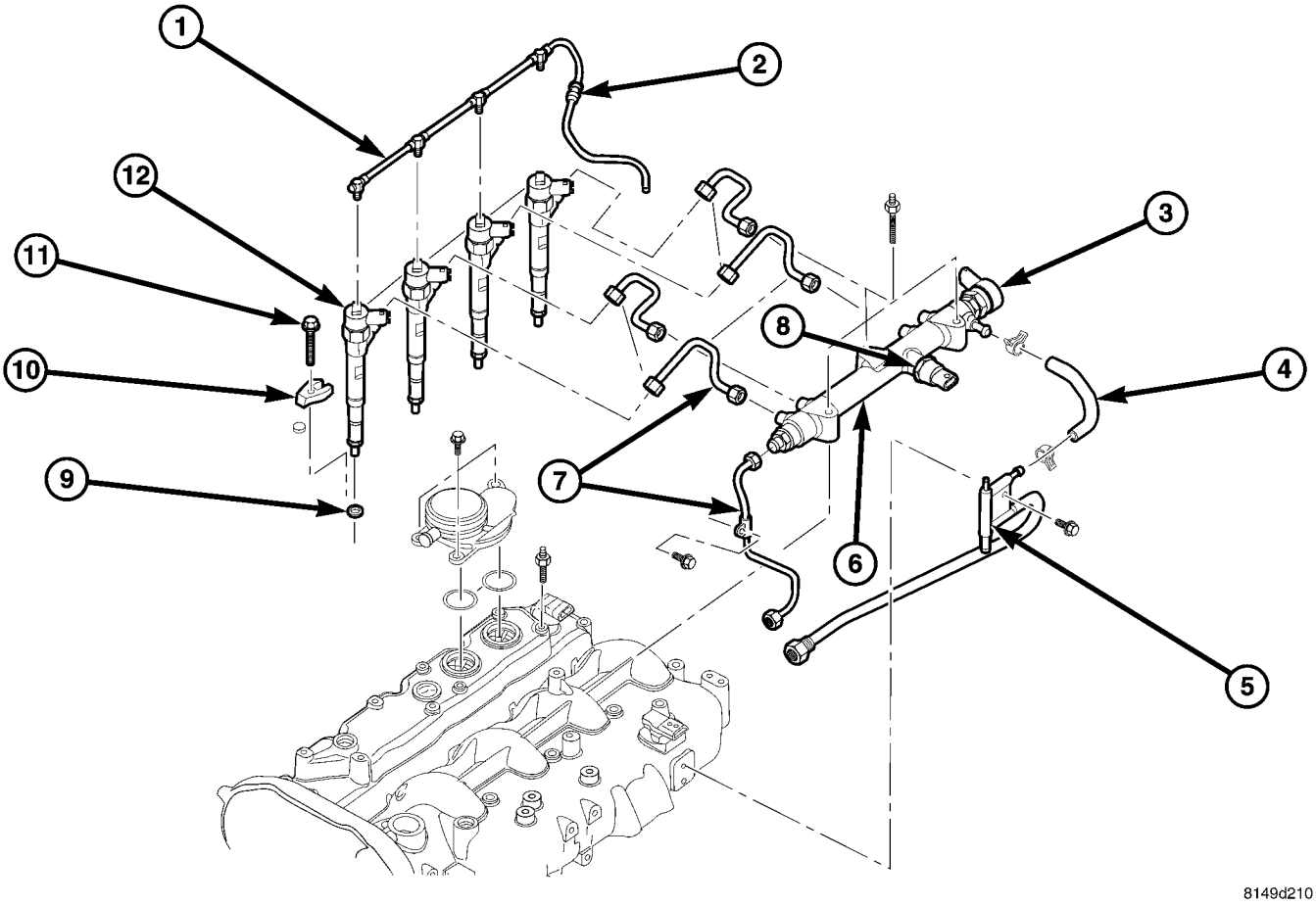

Fig. 16 FUEL SYSTEM COMPONENTS

1 - RETURN FUEL LINE
2 - ONE WAY VALVE
3 - FUEL RAIL SOLENOID
4 - RETURN FUEL HOSE
5 - RETURN FUEL JUNCTION
6 - FUEL RAIL
7 - HIGH PRESSURE FUEL LINES
8 - FUEL RAIL PRESSURE SWITCH
9 - SEAL
10 - INJECTOR HOLD DOWN
11 - BOLT
12 - FUEL INJECTOR

FUEL RAIL (Continued)

The fuel rail stores the fuel for the injectors at high pressure. At the same time, the pressure oscillations which are generated due to the high-pressure pump delivery and the injection of fuel are dampened by the rail volume.

The fuel rail is common to all cylinders, hence it's name "common rail". Even when large quantities of fuel are extracted, the fuel rail maintains a constant inner pressure. This ensures that the injection pressure remains constant from the moment the injector opens.

REMOVAL

WARNING: HIGH - PRESSURE LINES DELIVER DIESEL FUEL UNDER EXTREME PRESSURE FROM THE INJECTION PUMP TO THE FUEL INJECTORS. THIS MAY BE AS HIGH AS 1600BAR (23,200 PSI.). USE EXTREME CAUTION WHEN INSPECTING FOR HIGH - PRESSURE FUEL LEAKS. FUEL UNDER THIS AMOUNT OF PRESSURE CAN PENETRATE SKIN CAUSING PERSONAL INJURY OR DEATH. INSPECT FOR HIGH — PRESSURE FUEL LEAKS WITH A SHEET OF CARDBOARD. WEAR SAFETY GOGGLES AND ADEQUATE PROTECTIVE CLOTHING WHEN SERVICING FUEL SYSTEM.

(1) Disconnect negative battery cable.

(2) Remove engine cover and bracket assembly (Refer to 9 - ENGINE COVER - REMOVAL).

(3) Disconnect fuel pressure sensor electrical connector (Fig. 17).

NOTE: If fuel rail is being replaced it is necessary to replace the fuel rail solenoid.

(4) Disconnect the fuel rail solenoid electrical connector.

(5) Disconnect fuel rail return line at fuel rail (Fig. 17).

(6) Disconnect fuel high pressure line from injection pump to fuel rail at fuel rail.

(7) Disconnect fuel high pressure line from fuel rail to fuel injector at fuel rail (Fig. 17).

(8) Remove fuel rail retaining bolts and remove rail from cylinder head cover/intake manifold (Fig. 17).

INSTALLATION

WARNING: HIGH - PRESSURE LINES DELIVER DIESEL FUEL UNDER EXTREME PRESSURE FROM THE INJECTION PUMP TO THE FUEL INJECTORS. THIS MAY BE AS HIGH AS 1600BAR (23,200 PSI.). USE EXTREME CAUTION WHEN INSPECTING FOR HIGH - PRESSURE FUEL LEAKS. FUEL UNDER THIS AMOUNT OF PRESSURE CAN PENETRATE SKIN CAUSING PERSONAL INJURY OR DEATH. INSPECT FOR HIGH — PRESSURE FUEL LEAKS WITH A SHEET OF CARDBOARD. WEAR SAFETY GOGGLES AND ADEQUATE PROTECTIVE CLOTHING WHEN SERVICING FUEL SYSTEM.

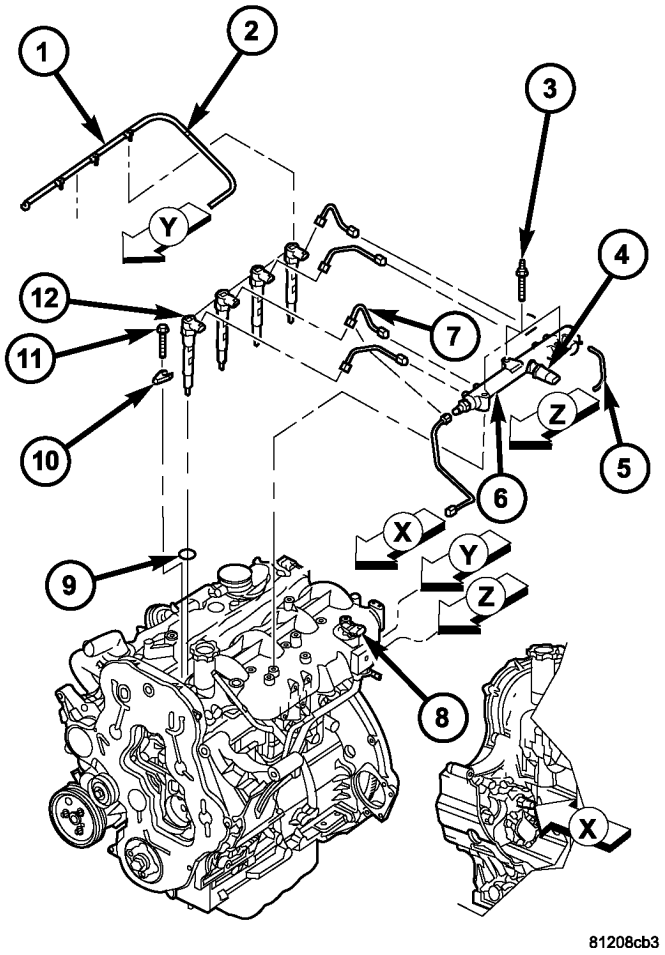

Fig. 17 FUEL SYSTEM COMPONENTS

1 - FUEL RETURN LINE
2 - ONE WAY VALVE
3 - BOLT
4 - FUEL RAIL PRESSURE SENSOR
5 - FUEL RETURN HOSE
6 - FUEL RAIL
7 - HIGH PRESSURE FUEL INJECTOR SUPPLY LINE
8 - BOOST PRESSURE/INTAKE AIR TEMPERATURE SENSOR
9 - GASKET
10 - FUEL INJECTOR RETAINER
11 - BOLT
12 - FUEL INJECTOR

NOTE: The fuel rail solenoid must be replaced upon removal. When replacing fuel lines or solenoid it is necessary to counterhold and correctly torque the fitting. Refer to the proper procedure.

(1) Replace the fuel rail solenoid (Refer to 14 - FUEL SYSTEM/FUEL INJECTION/FUEL PRESSURE SOLENOID - REMOVAL).

FUEL RAIL (Continued)

(2) Install the fuel pressure sensor (Refer to 14 - FUEL SYSTEM/FUEL INJECTION/FUEL PRESSURE SENSOR - INSTALLATION).

(3) Install fuel rail on cylinder head cover/intake manifold (Fig. 17). Torque retaining bolts to 27.5N·m.

(4) Connect injector high pressure fuel lines at fuel rail (Fig. 17).

(5) Connect fuel rail high pressure fuel line at fuel rail.

(6) Connect fuel rail fuel return line at fuel rail (Fig. 17).

(7) Connect fuel pressure sensor electrical connector (Fig. 17).

(8) Install engine cover and bracket assembly (Refer to 9 - ENGINE COVER - INSTALLATION).

(9) Connect negative battery cable.

FUEL LINES

DESCRIPTION

DESCRIPTION

All fuel lines up to the fuel injection pump are considered low-pressure. This includes the fuel lines from the fuel tank to the high pressure fuel injection pump. The fuel return lines and the fuel drain lines are also considered low-pressure lines. High-pressure lines are used between the fuel injection pump and the fuel injectors (Refer to 14 - FUEL SYSTEM - WARNING). Also refer to High-Pressure Fuel Lines Description/Operation (Refer to 14 - FUEL SYSTEM/ FUEL DELIVERY/FUEL LINES - OPERATION).

DESCRIPTION - HIGH PRESSURE FUEL LINES

CAUTION: High pressure lines can not contact each other or other components. Do not attempt to repair or weld high pressure fuel lines that are damaged. If lines are kinked or bent, they MUST be replaced. Use only recommended lines when replacement of high pressure fuel line is necessary.

(Refer to 14 - FUEL SYSTEM - WARNING). The high-pressure fuel lines are used between the high pressure fuel injection pump and the fuel injector rail, and between the fuel injection rail and fuel injectors. All other fuel lines are considered low-pressure lines.

OPERATION - HIGH PRESSURE FUEL LINES

WARNING: HIGH - PRESSURE LINES DELIVER DIESEL FUEL UNDER EXTREME PRESSURE FROM THE INJECTION PUMP TO THE FUEL INJECTORS. THIS MAY BE AS HIGH AS 1600BAR (23,200 PSI.). USE EXTREME CAUTION WHEN INSPECTING FOR HIGH - PRESSURE FUEL LEAKS. FUEL UNDER THIS AMOUNT OF PRESSURE CAN PENETRATE SKIN CAUSING PERSONAL INJURY OR DEATH. INSPECT FOR HIGH — PRESSURE FUEL LEAKS WITH A SHEET OF CARDBOARD. WEAR SAFETY GOGGLES AND ADEQUATE PROTECTIVE CLOTHING WHEN SERVICING FUEL SYSTEM.

CAUTION: The high-pressure fuel lines cannot contact each other or other components. Do not attempt to weld high-pressure fuel lines or to repair lines that are damaged. If lines are ever kinked or bent, they must be replaced. Use only the recommended lines when replacement of high-pressure fuel line is necessary.

High-pressure fuel lines deliver fuel under extremely high pressure from the high pressure pump to the fuel injectors (Refer to 14 - FUEL SYSTEM - WARNING). The lines expand and contract from the high-pressure fuel pulses generated during the injection process. All high-pressure fuel lines are of the same length and inside diameter. Correct high-pressure fuel line usage and installation is critical to smooth engine operation.

FUEL INJECTION PUMP

DESCRIPTION

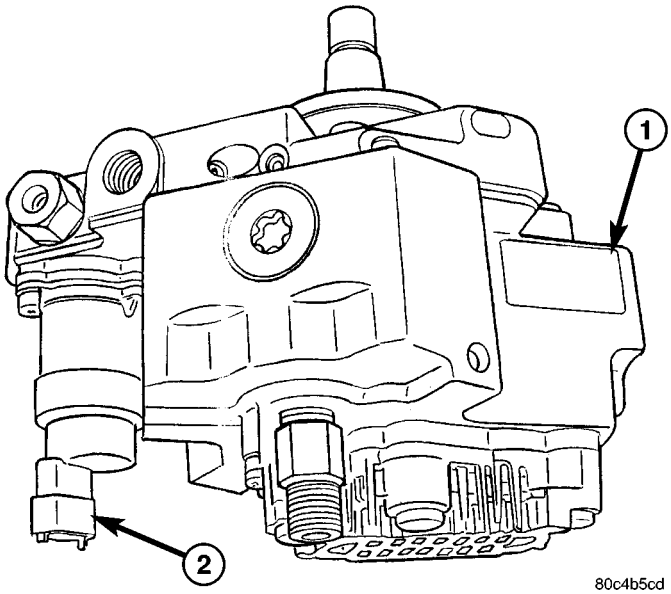

Fig. 18 FUEL INJECTION PUMP

1 - FUEL INJECTION PUMP
2 - FUEL QUANTITY SOLENOID

A radial, 3 piston pump with a gear type fuel pump attached to the back, is used as the high pressure pump for fuel pressure generation (Refer to 14 - FUEL SYSTEM - WARNING) (Fig. 18).

FUEL INJECTION PUMP (Continued)

The pump is driven by the timing belt. Pressure is generated independently of the injection process. The pump is lubricated with diesel fuel and is not responsible for fuel injection timing.

OPERATION

Cascade Overflow Valve Instead of using an electric supply pump, this fuel system uses a gear supply pump located inside the rear of the high pressure pump. The pump is driven by an eccentric on the end of the high pressure pump shaft. The gear pump draws fuel from the fuel tank through the fuel filter.

The pressurized outlet side of the gear pump provides pressurized fuel to a branched circuit internal to the high pressure pump flange, which supples both the fuel quantity solenoid and the cascade overflow valve. Because the gear pump increases fuel flow and pressure as the engine rpm increases, the pressure is regulated by the cascade overflow valve. The cascade overflow valve and gear supply pump are not serviced independently of the high pressure pump.

The cascade overflow valve has two functions:

- Regulation of lubrication fuel to the internal moving parts of the high pressure pump
- Regulation of the fuel pressure being supplied to the fuel quantity solenoid

The cascade valve has a machined center piece that has three drillings. One for overflow, one for lubrication and one for supply. The valve works in three stages based on the pressure entering the inlet of the valve.

Stage 1 When the fuel pressure entering the tip of the cascade valve is between 0 and 3 bar (44 psi), the spring force is not overcome and fuel only flows through the center drilling. This drilling always allows fuel flow through to the pump center ring and lubricates the pump bushings and internal moving parts. This circuit also allows air to bleed during initial cranking and returns the air to the fuel tank. The cascade valve is only in stage one during cranking.

Stage 2 When the fuel entering the cascade valve exceeds 3 bar (44 psi), but is less than 5 bar (73 psi), the center piece of the valve moves against the spring force aligning another passage for lubrication purposes. Stage 2 can be reached during cranking and initial start up.

Stage 3 When fuel pressure exceeds 5 bar (73 psi), the center of the valve aligns with the overflow passage. This stage relieves the pressure into an overflow circuit that sends the fuel back to the inlet side of the gear pump which limits maximum fuel pressure to 5 bar (73 psi). Lubrication fuel also continues to flow though the other ports during this stage. Excess is sent back to the fuel tank through the return circuit.

High Pressure Pumping Plungers The fuel quantity solenoid supples three high pressure pumping chambers. The pumping chambers have one way inlet valves that allow fuel to flow into the chambers. The valves then close during compression of the fuel and cause the high pressure fuel to overcome a ball and angled seat outlet valve.

All three pumping chambers are tied together in one circuit internal to the pump and provide high pressure fuel up to 1600 bar (23,000 psi) through a steel line, to the fuel rail.

The pump is driven at 1 :1 engine speed and is not responsible for injection timing. The pump is only responsible for providing high pressure fuel while the ECM controls the injection timing.

REMOVAL

WARNING: HIGH - PRESSURE LINES DELIVER DIESEL FUEL UNDER EXTREME PRESSURE FROM THE INJECTION PUMP TO THE FUEL INJECTORS. THIS MAY BE AS HIGH AS 1600BAR (23,200 PSI.). USE EXTREME CAUTION WHEN INSPECTING FOR HIGH - PRESSURE FUEL LEAKS. FUEL UNDER THIS AMOUNT OF PRESSURE CAN PENETRATE SKIN CAUSING PERSONAL INJURY OR DEATH. INSPECT FOR HIGH — PRESSURE FUEL LEAKS WITH A SHEET OF CARDBOARD. WEAR SAFETY GOGGLES AND ADEQUATE PROTECTIVE CLOTHING WHEN SERVICING FUEL SYSTEM.

(1) Disconnect negative battery cable.

(2) Remove engine cover and bracket (Refer to 9 - ENGINE - REMOVAL).

(3) Evacuate A/C system (Refer to 24 - HEATING & AIR CONDITIONING/PLUMBING - STANDARD PROCEDURE).

(4) Remove accessory drive belt (Refer to 7 - COOLING/ACCESSORY DRIVE/DRIVE BELTS - REMOVAL).

(5) Remove cooling fan and fan shroud.

(6) Remove charge air cooler outlet hose to intake manifold.

(7) Remove fan support assembly (Refer to 7 - COOLING/ENGINE/RADIATOR FAN - REMOVAL).

(8) Remove timing belt outer cover (Refer to 9 - ENGINE/VALVE TIMING/TIMING BELT / CHAIN COVER(S) - REMOVAL).

(9) Using special tool VM.1055, remove high pressure injection pump sprocket retaining nut (Fig. 19).

FUEL INJECTION PUMP (Continued)

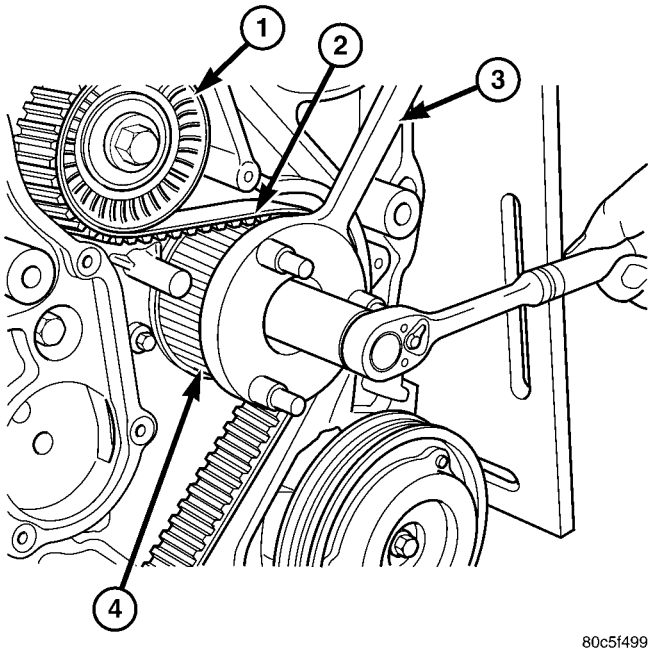

Fig. 19 INJECTION PUMP SPROCKET RETAINING NUT REMOVAL/INSTALLATION

1 - IDLER PULLEY
2 - TIMING BELT
3 - VM.1055
4 - INJECTION PUMP SPROCKET

NOTE: The use of special tool VM.1067 will allow you to remove the high pressure injection pump without removing the timing belt from the engine. This will allow you to remove and install the high pressure injection pump without altering injection pump timing.

(10) Install feet from VM.1067 in injection pump sprocket as shown (Fig. 20).

(11) Install inner flange of special tool VM.1067 on injection pump sprocket as shown (Fig. 21). Secure flange to feet in injection pump sprocket with allen bolts supplied with tool.

(12) Screw the high pressure injection pump sprocket holding plate assembly into flange of VM.1067 (Fig. 22) Using left hand threaded bolt supplied, secure holding plate assembly to timing belt inner cover.

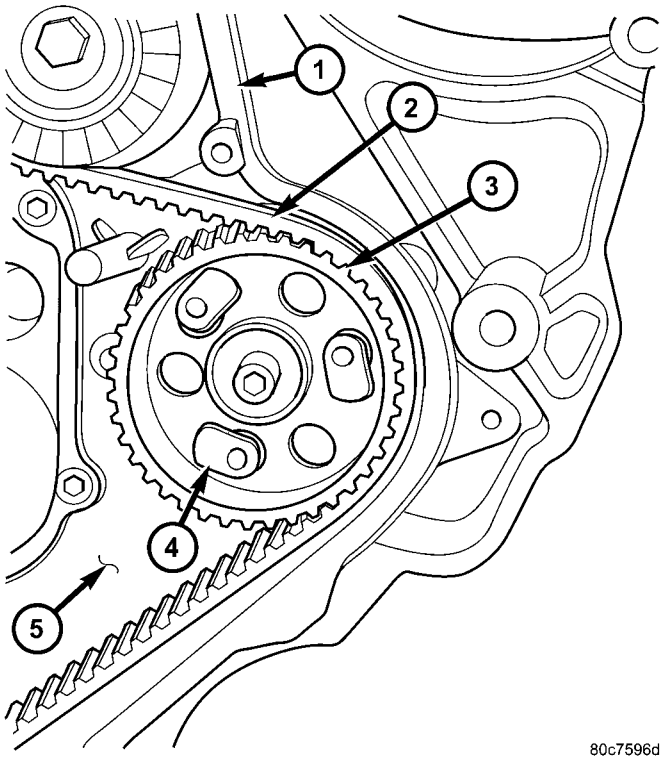

Fig. 20 VM.1067 FEET INSTALLATION

1 - OUTER TIMING BELT SEALING SURFACE
2 - TIMING BELT
3 - TIMING BELT SPROCKET
4 - FEET FOR SPECIAL TOOL VM.1067
5 - INNER TIMING BELT COVER

(13) Disconnect A/C lines at compressor.

(14) Remove charge air inlet hose.

(15) Remove the EGR airflow control valve from the intake manifold (Refer to 25 - EMISSIONS CONTROL/EXHAUST GAS RECIRCULATION/VALVE - REMOVAL).

(16) Remove high pressure injection pump to fuel rail high pressure line.

(17) Disconnect high pressure injection pump quantity control valve electrical connector.

(18) Disconnect fuel supply and return lines at high pressure injection pump (Fig. 23).

(19) Remove alternator to intake manifold bracket.

CAUTION: Care must be taken not to bend the brake vacuum tube when removing high pressure pump.

(20) Remove high pressure injection pump retaining nuts and remove pump (Fig. 23).

FUEL INJECTION PUMP (Continued)

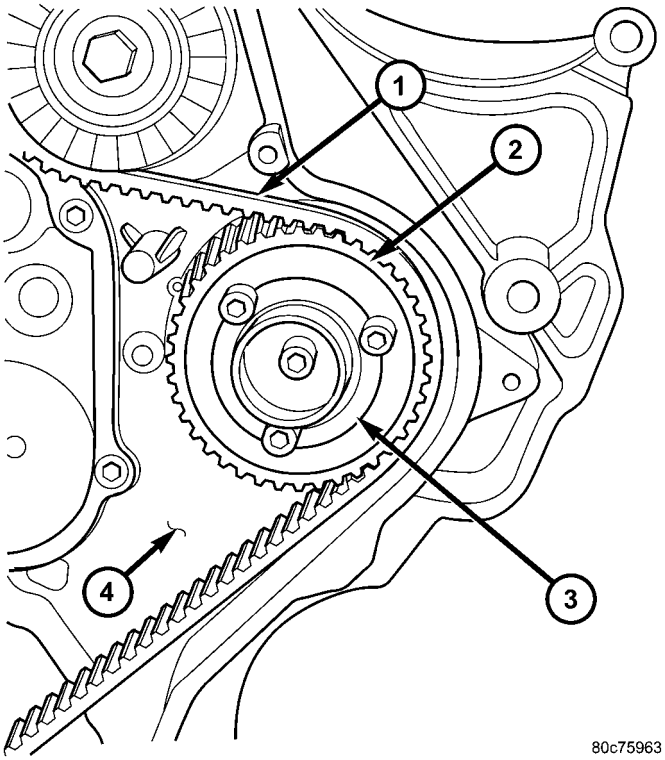

Fig. 21 VM.1067 INSTALLATION

1 - TIMING BELT
2 - INJECTION PUMP SPROCKET
3 - FLANGE OF VM.1067
4 - INNER TIMING BELT COVER

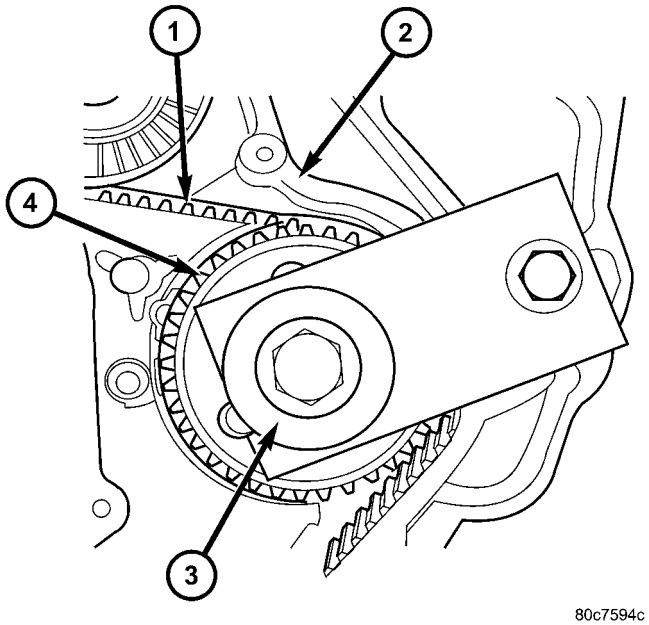

Fig. 22 INJECTION PUMP/GEAR REMOVAL USING VM.1067

1 - TIMING BELT
2 - INNER TIMING BELT COVER
3 - INJECTION PUMP SPROCKET HOLDING PLATE ASSEMBLY PART OF VM.1067
4 - INJECTION PUMP SPROCKET

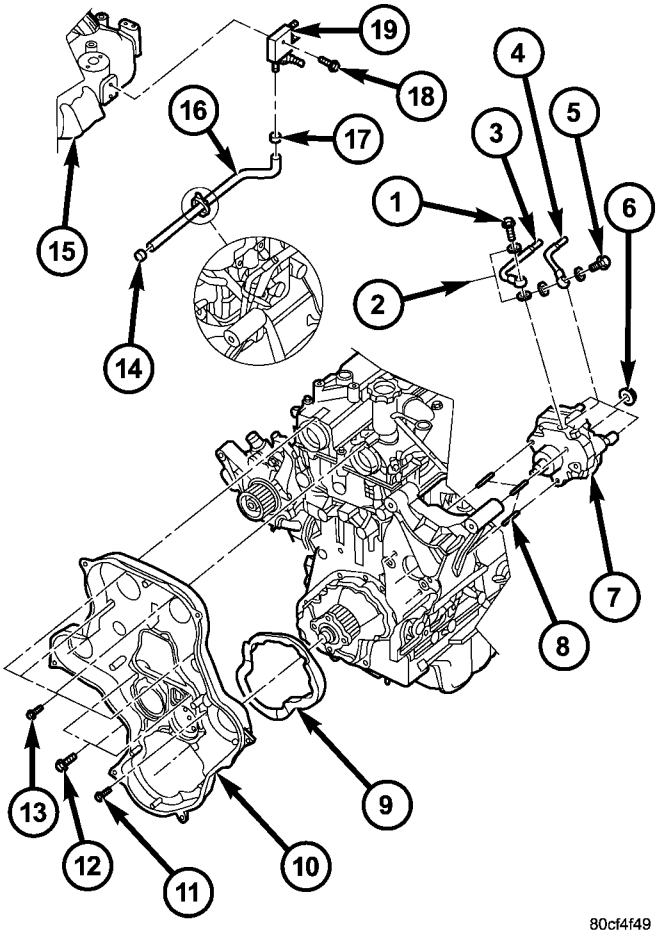

Fig. 23 FUEL INJECTION PUMP REMOVAL/ INSTALLATION

1 - BANJO FITTING
2 - BRASS WASHERS
3 - FUEL INLET LINE
4 - FUEL OUTLET LINE
5 - BANJO FITTING
6 - INJECTION PUMP RETAINING NUT
7 - INJECTION PUMP
8 - MOUNTING STUDS
9 - INNER TIMING COVER SEAL
10 - INNER TIMING COVER
11 - RETAINING BOLT
12 - RETAINING BOLT
13 - RETAINING BOLT
14 - HOSE CLAMP
15 - CYLINDER HEAD COVER/INTAKE MANIFOLD
16 - FUEL RETURN LINE TO INJECTION PUMP
17 - HOSE CLAMP
18 - FUEL RETURN JUNCTION BLOCK RETAINING BOLT
19 - FUEL RETURN JUNCTION BLOCK

FUEL INJECTION PUMP (Continued)

INSTALLATION

WARNING: HIGH - PRESSURE LINES DELIVER DIESEL FUEL UNDER EXTREME PRESSURE FROM THE INJECTION PUMP TO THE FUEL INJECTORS. THIS MAY BE AS HIGH AS 1600BAR (23,200 PSI.). USE EXTREME CAUTION WHEN INSPECTING FOR HIGH - PRESSURE FUEL LEAKS. FUEL UNDER THIS AMOUNT OF PRESSURE CAN PENETRATE SKIN CAUSING PERSONAL INJURY OR DEATH. INSPECT FOR HIGH - PRESSURE FUEL LEAKS WITH A SHEET OF CARDBOARD (Refer to 14 - FUEL SYSTEM/FUEL DELIVERY - DIAGNOSIS AND TESTING). WEAR SAFETY GOGGLES AND ADEQUATE PROTECTIVE CLOTHING WHEN SERVICING FUEL SYSTEM.

NOTE: If Engine Timing Is Of Concern, (Refer to 9 - ENGINE/VALVE TIMING/TIMING BELT/CHAIN AND SPROCKETS - INSTALLATION) or (Refer to 9 - ENGINE/VALVE TIMING/TMNG BELT/CHAIN TENSIONER&PULLEY - ADJUSTMENTS).

(1) Loosen bolt in center of injection pump holding plate and slide high pressure injection pump through the accessory bracket into the injection pump sprocket.

(2) Install high pressure injection pump retaining nuts (Fig. 23). Torque nuts to 27.5N·m (20 ft. lbs.).

(3) Unscrew injection pump holding plate (part of VM.1067) from inner timing belt cover and remove (Fig. 22).

(4) Install high pressure injection pump sprocket retaining nut to hold sprocket in place.

(5) Remove flange and feet (both part of VM.1067) from high pressure injection pump sprocket (Fig. 20) (Fig. 21).

(6) Using special tool VM.1055 (Fig. 19), torque high pressure injection pump sprocket retaining nut to 88.3N·m.(65 ft.lbs.).

(7) Connect fuel quantity control valve electrical connector.

(8) Connect fuel supply and return lines at high pressure injection pump (Fig. 23). (Refer to 14 - FUEL SYSTEM - WARNING).

(9) Install the EGR airflow control valve (Refer to 25 - EMISSIONS CONTROL/EXHAUST GAS RECIRCULATION/VALVE - INSTALLATION).

(10) Install outer timing belt cover (Refer to 9 - ENGINE/VALVE TIMING/TIMING BELT / CHAIN COVER(S) - INSTALLATION).

(11) Install fan support assembly (Refer to 7 - COOLING/ENGINE/RADIATOR FAN - INSTALLATION).

(12) Install accessory drive belt (Refer to 7 - COOLING/ACCESSORY DRIVE/DRIVE BELTS - INSTALLATION).

(13) Install cooling fan and shroud assembly.

(14) Install charge air cooler outlet hose.

(15) Install engine cover and bracket (Refer to 9 - ENGINE - INSTALLATION).

(16) Connect negative battery cable.

(17) Evacuate and recharge A/C system (Refer to 24 - HEATING & AIR CONDITIONING/PLUMBING - STANDARD PROCEDURE).

FUEL LEVEL SENDING UNIT / SENSOR

DESCRIPTION

The fuel gauge sending unit (fuel level sensor) is attached to the side of the lower fuel tank module. The sending unit consists of a float, an arm, and a variable resistor track (card).

OPERATION

For Fuel Gauge Operation: A constant current source of approximately 32 milliamps is supplied to the resistor track on the fuel gauge sending unit. This is fed directly from the Engine Control Module (ECM). **NOTE: For diagnostic purposes, this 12V power source can only be verified with the circuit opened (fuel tank module electrical connector unplugged). With the connectors plugged, output voltages will vary from about 0.6 volts at FULL, to about 8.6 volts at EMPTY (about 8.6 volts at EMPTY for Jeep models, and about 7.0 volts at EMPTY for Dodge Truck models).** The resistor track is used to vary the voltage (resistance) depending on fuel tank float level. As fuel level increases, the float and arm move up, which decreases voltage. As fuel level decreases, the float and arm move down, which increases voltage. The varied voltage signal is returned back to the ECM through the sensor return circuit.

Both of the electrical circuits between the fuel gauge sending unit and the ECM are hard-wired (not multi-plexed). After the voltage signal is sent from the resistor track, and back to the ECM, the ECM will interpret the resistance (voltage) data and send a message across the multi-plex bus circuits to the instrument panel cluster. Here it is translated into the appropriate fuel gauge level reading. Refer to Instrument Panel for additional information.

DIAGNOSIS AND TESTING - FUEL LEVEL SENDING UNIT

The fuel level sending unit contains a variable resistor (track). As the float moves up or down, elec-

FUEL LEVEL SENDING UNIT / SENSOR (Continued)

trical resistance will change. Refer to Instrument Panel and Gauges for Fuel Gauge testing. To test the gauge sending unit only, it must be removed from vehicle. The unit is a separate part of the lower fuel tank module section. Refer to Fuel Tank Module Removal/Installation for procedures (remove only the upper section of the fuel pump module). Measure the resistance across the sending unit terminals. With float in up position, resistance should be 20 ohms (+/- 5%). With float in down position, resistance should be 220 ohms (+/- 5%).

REMOVAL

The fuel level sending unit (fuel level sensor) (2) (Fig. 24) and float assembly (4) and (5) are located on the fuel tank module.

(1) Remove fuel tank module from fuel tank (Refer to 14 - FUEL SYSTEM/FUEL DELIVERY/FUEL TANK MODULE - REMOVAL).

(2) To remove sending unit from tank module, lift on plastic locking tab while sliding sending unit upwards.

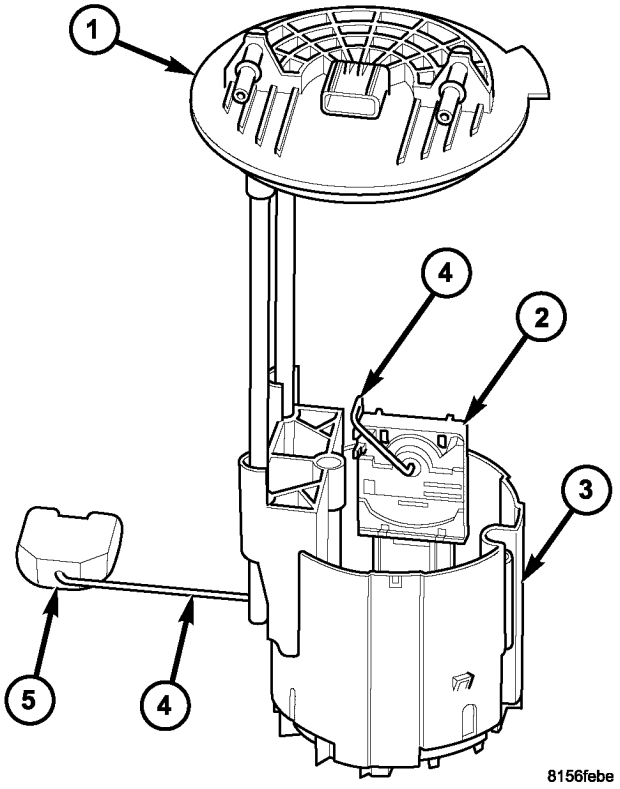

Fig. 24 DIESEL FUEL LEVEL SENDING UNIT

1 - TOP OF TANK MODULE
2 - FUEL LEVEL SENDING UNIT
3 - FUEL RESERVOIR
4 - FLOAT ARM
5 - FLOAT

(3) Disconnect electrical connectors from fuel tank module. Separate necessary sending unit wiring.

INSTALLATION

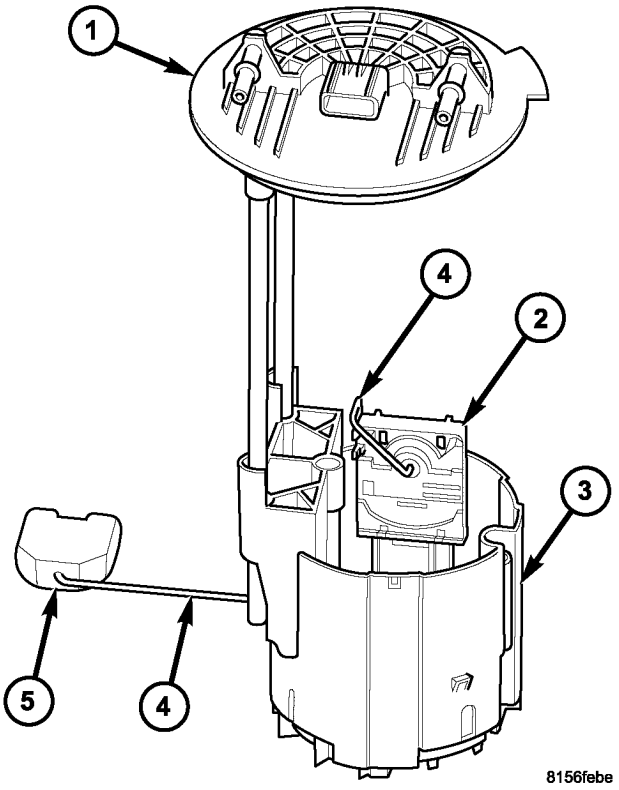

Fig. 25 DIESEL FUEL LEVEL SENDING UNIT

1 - TOP OF TANK MODULE
2 - FUEL LEVEL SENDING UNIT
3 - FUEL RESERVOIR
4 - FLOAT ARM
5 - FLOAT

(1) Connect necessary wiring into electrical connectors.

(2) Position sending unit (2) (Fig. 25) to tank module. Slide and snap into place until tab engages.

(3) Install fuel tank module into fuel tank.

FUEL HEATER

DESCRIPTION

The fuel heater is used to prevent diesel fuel from waxing and plugging the fuel filter during cold weather operation. The fuel heater is located in the fuel filter/water separator assembly head, next to the fuel temperature sensor (Fig. 26).

OPERATION

The element inside the heater assembly is made of a Positive Temperature Coefficient (PTC) material, and has power applied to it by the fuel heater relay anytime the ignition key is in the “on” position. PTC material has a high resistance to current flow when its temperature is high, which means that it will not generate heat when the temperature is above a certain value. When the temperature is below 7°C (45° F), the resistance of the PTC element is lowered, and allows current to flow through the fuel heater element warming the fuel. When the temperature is above 29°C (85° F), the PTC element’s resistance rises, and current flow through the heater element stops (Fig. 27).

Voltage to operate the fuel heater is supplied from the glow plug module, through the fuel heater relay, when the ECM senses the ignition (key) switch.

REMOVAL

WARNING: STORE FUEL IN APPROVED AND PROPERLY MARKED CONTAINERS. WEAR SAFETY GOGGLES AND ADEQUATE PROTECTIVE CLOTHING WHEN SERVICING FUEL SYSTEM.

(1) Disconnect negative battery cable.

(2) Disconnect fuel heater, fuel temperature and water in fuel (WIF) sensor electrical connectors (Fig. 27).

(3) Drain fuel filter/water separator assembly into a suitable and appropriately marked container by loosening the WIF at the bottom of fuel filter.

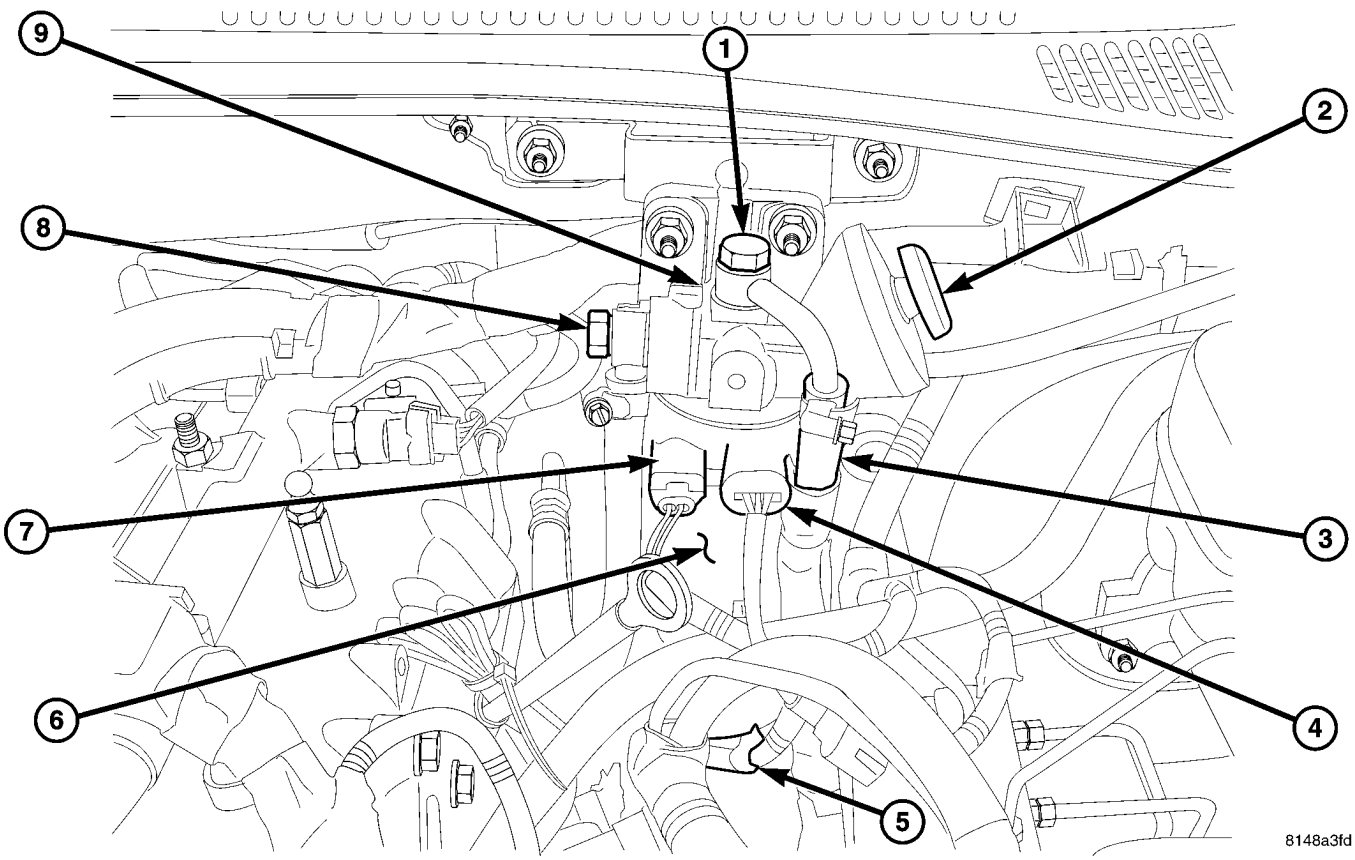

Fig. 26 FUEL FILTER/WATER SEPARATOR

1 - FUEL FILTER ASSEMBLY
2 - PRIMER BUTTON
3 - FUEL SUPPLY TO HIGH PRESSURE PUMP
4 - FUEL HEATER
5 - WIF SENSOR
6 - FUEL FILTER
7 - FUEL TEMPERATURE SENSOR
8 - FUEL SUPPLY FROM TANK
9 - AIR BLEED SCREW

FUEL HEATER (Continued)

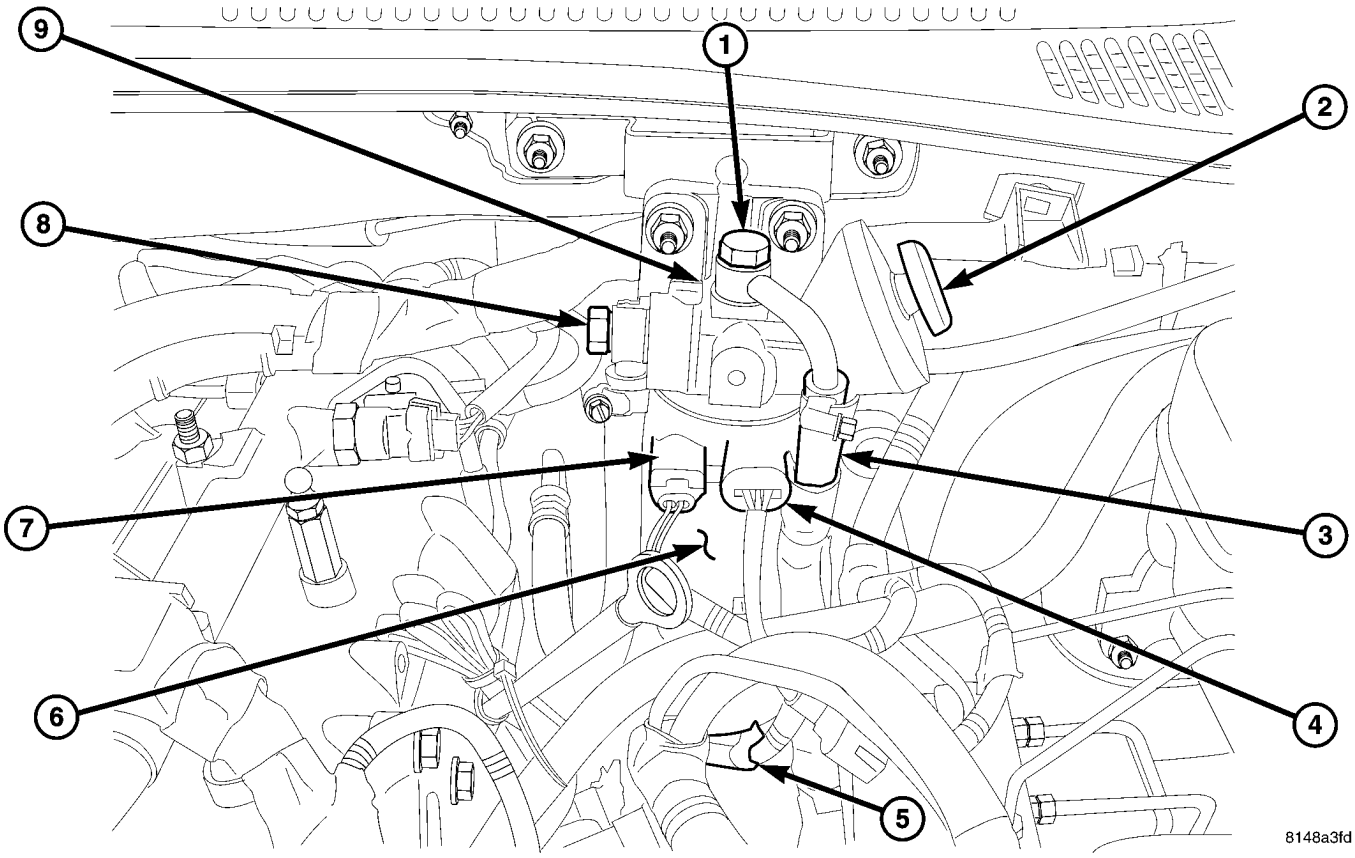

Fig. 27 FUEL FILTER/WATER SEPARATOR

1 - FUEL FILTER ASSEMBLY
2 - PRIMER BUTTON
3 - FUEL SUPPLY TO HIGH PRESSURE PUMP
4 - FUEL HEATER
5 - WIF SENSOR
6 - FUEL FILTER
7 - FUEL TEMPERATURE SENSOR
8 - FUEL SUPPLY FROM TANK
9 - AIR BLEED SCREW

NOTE: Care must be taken to identify the fuel supply and return hoses before removal from the fuel filter housing. They can easily be crossed during installation and lead to a no start condition.

(4) Paint mark and remove the fuel inlet and outlet hoses (Fig. 27).

(5) Remove fuel supply and return hose from the housing.

(6) Remove the fuel filter housing fasteners and housing.

INSTALLATION

(1) Install fuel filter/water separator assembly. Tighten retaining fasteners to 24.5 N·m (18 ft.lbs.) (Fig. 27).

NOTE: Care must be taken when installing the fuel lines to assure proper routing. The lines can easily be crossed and cause a no start condition after the repair.

(2) Connect the fuel supply and return lines. Tighten clamps to 2.7N·m (24 in.lbs.) (Fig. 27).

(3) Connect fuel heater, WIF and fuel temperature sensor electrical connectors.

(4) Prime fuel system using the fuel priming plunger (Fig. 27). (Refer to 14 - FUEL SYSTEM - STANDARD PROCEDURE).

(5) Connect negative battery cable.

FUEL QUANTITY SOLENOID

DESCRIPTION

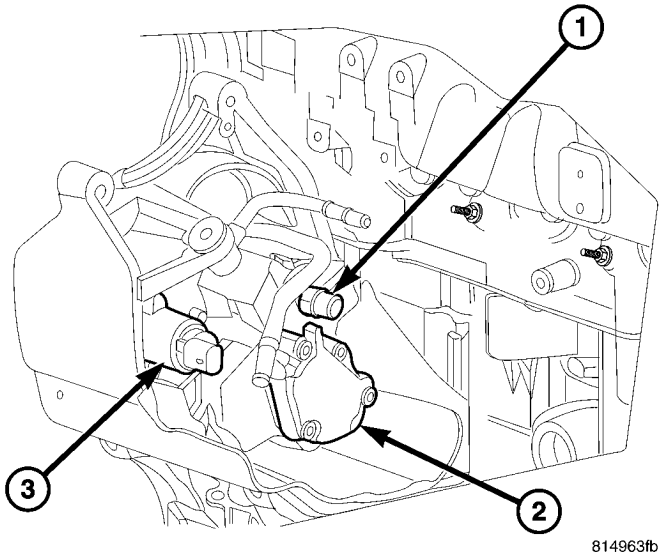

Fig. 28 FUEL QUANTITY SOLENOID

1 - FUEL SUPPLY TO FUEL RAIL
2 - HIGH PRESSURE FUEL PUMP
3 - FUEL QUANTITY SOLENOID

The fuel quantity solenoid is located in the back of the high pressure pump. The solenoid is pulse width modulated by the ECM and meters the amount of fuel that flows into the high pressure elements inside of the high pressure pump. The solenoid is also inactive during the first 30 seconds to allow maximum fuel pressure to the fuel rail during start up (Fig. 28).

OPERATION

The fuel quantity solenoid is a pulse width modulated valve that controls the amount of fuel sent or delayed to the high pressure pump elements inside of the high pressure pump. The ECM determines the fuel pressure set point based on engine sensor inputs. If the actual fuel rail pressure is too low, the ECM commands the solenoid to allow more fuel to flow to the high pressure pump. This minimizes the difference between the actual fuel rail pressure reading and the set point. The ECM will also operate the solenoid, delaying fuel if the fuel rail pressure becomes to high.

The fuel quantity solenoid is commanded open by the ECM to allow the high pressure pump to build maximum pressure (1600 BAR, 23,200 PSI) (Refer to 14 - FUEL SYSTEM - WARNING). the solenoid also has fuel tank heat protection function that meters the exact amount of fuel to prevent excess heated fuel from returning to the fuel tank

REMOVAL

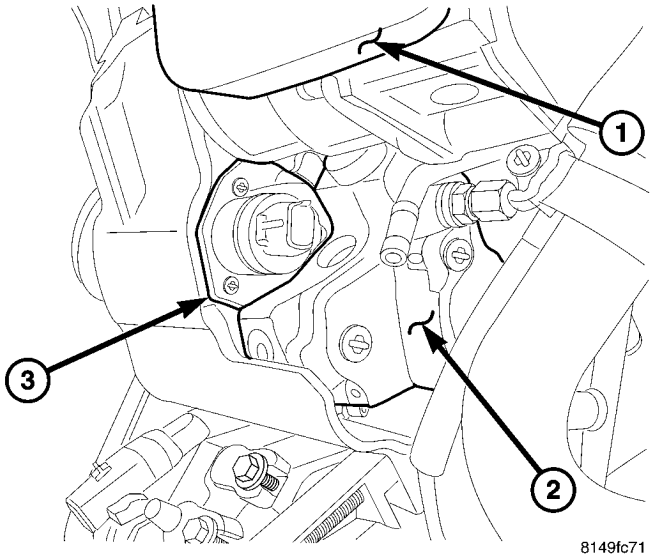

Fig. 29 FUEL QUANTITY SOLENOID

1 - EGR AIR CONTROL VALVE
2 - GEAR SUPPLY PUMP
3 - FUEL QUANTITY SOLENOID

(1) Disconnect the negative battery cable
(2) Remove the charge air inlet hose.
(3) Disconnect the fuel quantity solenoid wiring harness connector.
(4) Remove the solenoid from the back of the high pressure pump (Fig. 29).

NOTE: Inspect the fuel quantity solenoid and high pressure pump passage for contamination or corrosion. If contamination or corrosion is present replace the high pressure pump.

(5) Inspect solenoid and pump for corrosion.

FUEL QUANTITY SOLENOID (Continued)

INSTALLATION

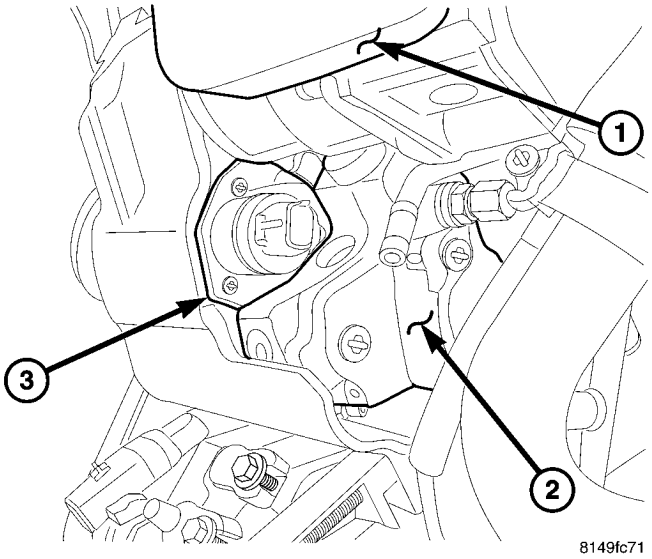

Fig. 30 QUANTITY CONTROL VALVE

1 - EGR AIR CONTROL VALVE
2 - GEAR SUPPLY PUMP
3 - FUEL QUANTITY SOLENOID

(1) Review the high pressure fuel system warning (Refer to 14 - FUEL SYSTEM - WARNING).

(2) Lubricate the fuel quantity solenoid and seal with clean diesel fuel.

(3) Install the solenoid into the high pressure pump, hand tighten the fasteners (Fig. 30).

(4) Torque the solenoid fasteners to 10.8 N·m (96 in. lbs.).

(5) Connect the wiring harness connector.

(6) Install the charge air inlet hose.

(7) Start engine, allow to warm, shut engine off and inspect for leaks.

FUEL TANK

REMOVAL - DIESEL

Fuel Tank Draining

(1) Raise vehicle.

(2) Thoroughly clean area around fuel fill fitting (6) (Fig. 31) and rubber fuel fill hose (1) at side of fuel tank. After cleaning, loosen fuel fill hose clamp (2) at tank.

Note position of index mark (3) (Fig. 31) before removing hose from fuel tank fitting.

(3) Remove rubber fuel fill hose (1) (Fig. 31) from fuel tank fill fitting (6) (Fig. 31). Drain fuel into an approved diesel fuel oil draining station.

Tank Removal

(1) If equipped, remove fuel tank skid plate and tow hooks. Certain equipment packages will also require removal of the trailer hitch. Refer to Tow

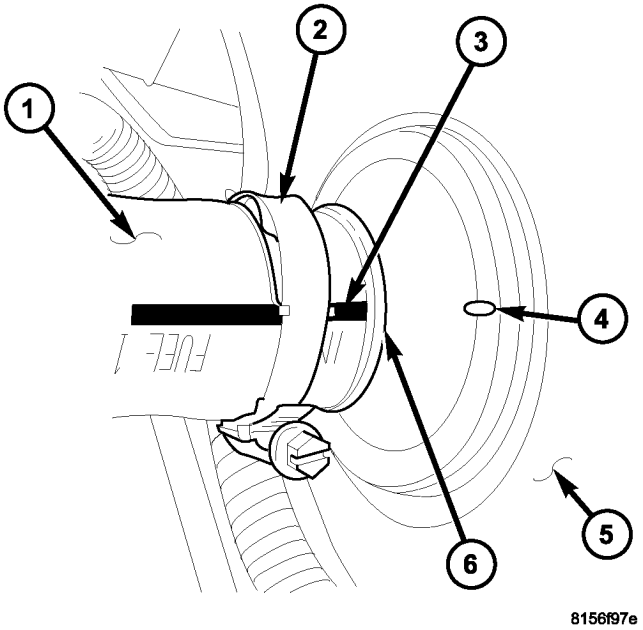

Fig. 31 FUEL FILL HOSE AT TANK

1 - FUEL FILL HOSE AT TANK
2 - HOSE CLAMP
3 - WHITE PAINTED INDEX MARK
4 - ALIGNMENT NOTCH
5 - LEFT SIDE OF FUEL TANK
6 - FUEL FILL FITTING

Hooks, Trailer Hitch or Skid Plate in 23, Body for removal/installation procedures.

(2) Support tank with a hydraulic jack.

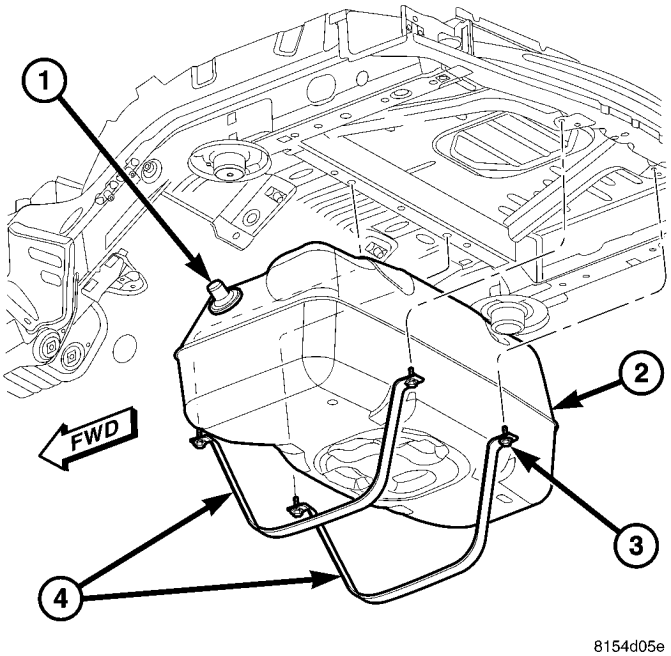

Fig. 32 FUEL TANK MOUNTING

1 - FILL FITTING
2 - FUEL TANK
3 - TANK MOUNTING BOLTS
4 - TANK MOUNTING STRAPS

FUEL TANK (Continued)

(3) Remove four fuel tank strap bolts (3) (Fig. 32) (2 at front of tank; 2 at rear of tank), and remove both tank support straps (4) (Fig. 32).

(4) Carefully lower tank a few inches.

(5) Disconnect fuel tank module electrical connector (3) (Fig. 33) on top of fuel tank.

(6) Disconnect fuel supply line (8) (Fig. 33) at front of fuel tank.

(7) Disconnect fuel return line (7) (Fig. 33) at front of fuel tank.

(8) Disconnect vent hose (5) (Fig. 33).

(9) Continue lowering tank while guiding remaining hoses and lines through plastic isolator sleeve on frame rail.

(10) If fuel tank is to be replaced, remove fuel tank module from tank. Refer to Fuel Tank Module Removal/Installation procedures.

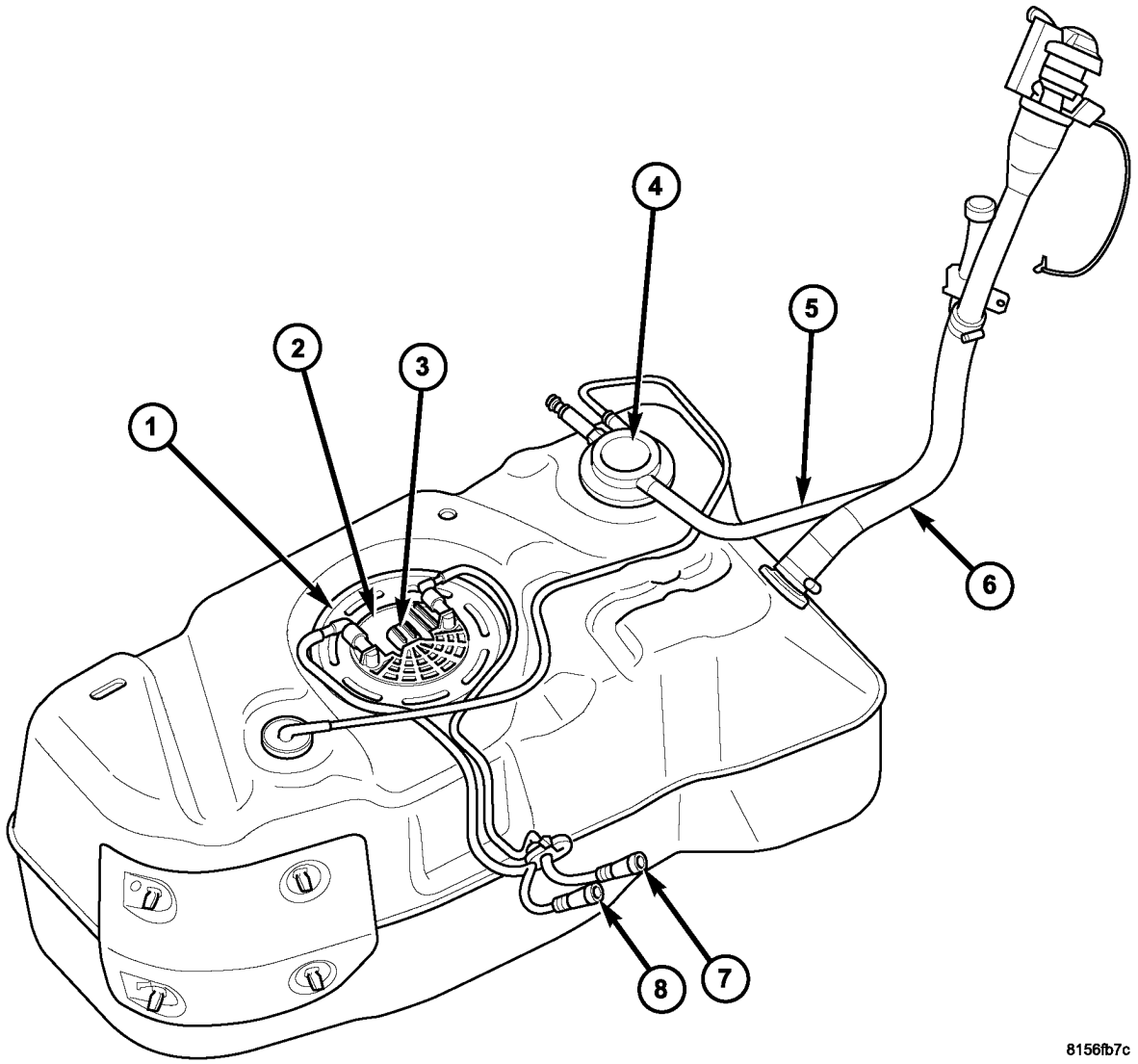

Fig. 33 FUEL TANK MODULE LOCATION-DIESEL

1 - LOCKRING
2 - FUEL TANK MODULE
3 - ELECTRICAL CONNECTOR
4 - CHECK VALVE
5 - FUEL VENT HOSE
6 - FUEL FILL HOSE
7 - FUEL RETURN LINE CONNECTION
8 - FUEL SUPPLY LINE CONNECTION

FUEL TANK (Continued)

INSTALLATION - DIESEL

(1) If fuel tank is to be replaced, install fuel tank module to tank. Refer to Fuel Tank Module Removal/ Installation procedures.

(2) Position fuel tank to hydraulic jack.

(3) Raise tank while carefully guiding vent tubes/ hoses through plastic isolator sleeve located on cross-member.

(4) Continue raising tank until module electrical connector (7) (Fig. 34) can be connected. After connection has been made, continue to raise tank to body.

(5) Connect fuel supply line (3) (Fig. 34).

(6) Connect fuel return line (6) (Fig. 34).

(7) Attach two fuel tank mounting straps (4) (Fig. 35) and four mounting bolts (3). Tighten bolts to 61 N·m (45 ft. lbs.) torque.

(8) Install fuel fill hose and hose clamp to fuel tank fitting. Rotate hose until white painted index

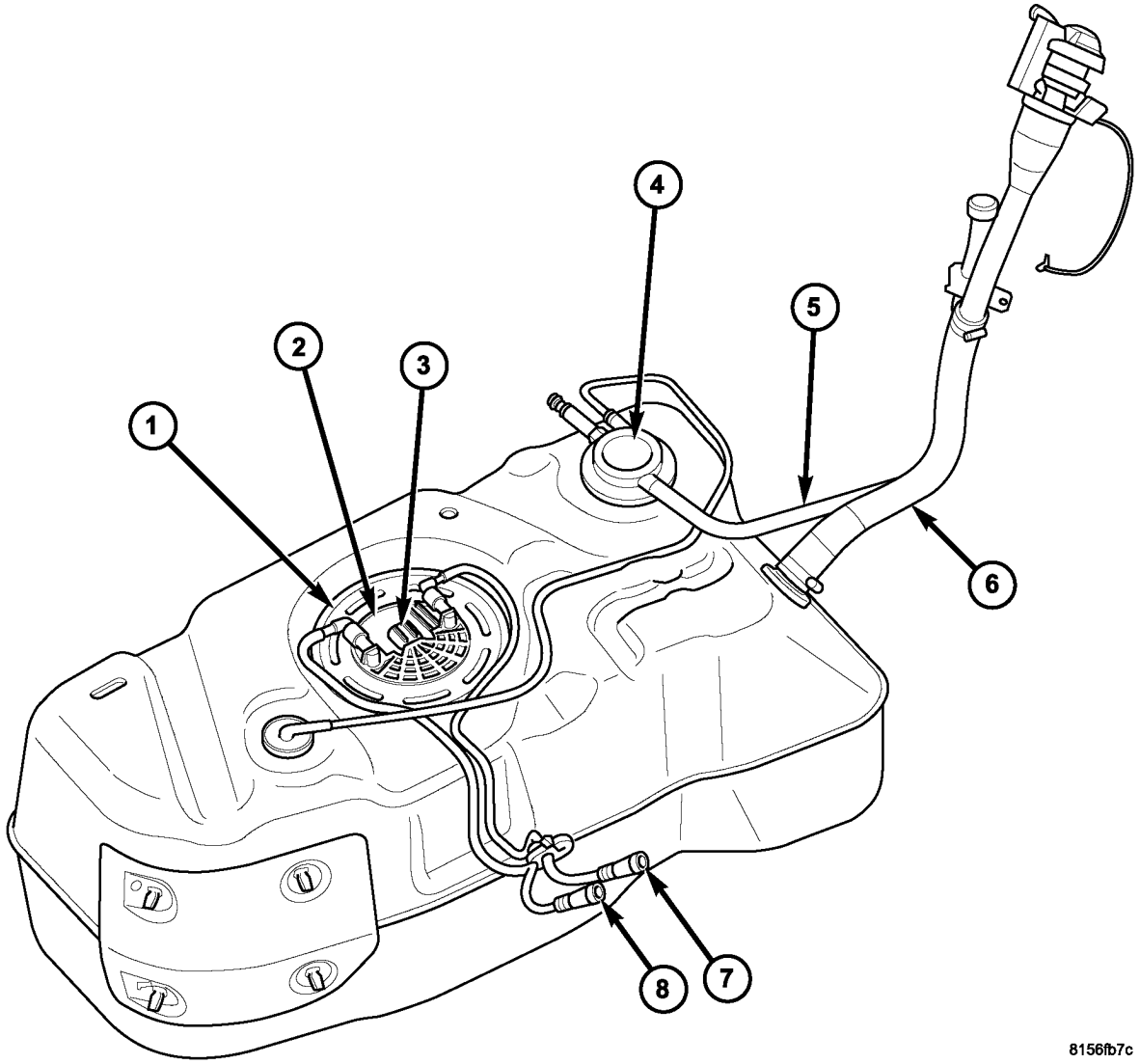

Fig. 34 FUEL TANK MODULE LOCATION-DIESEL

1 - LOCKRING
2 - FUEL TANK MODULE
3 - ELECTRICAL CONNECTOR
4 - CHECK VALVE
5 - FUEL VENT HOSE
6 - FUEL FILL HOSE
7 - FUEL RETURN LINE CONNECTION
8 - FUEL SUPPLY LINE CONNECTION

FUEL TANK (Continued)

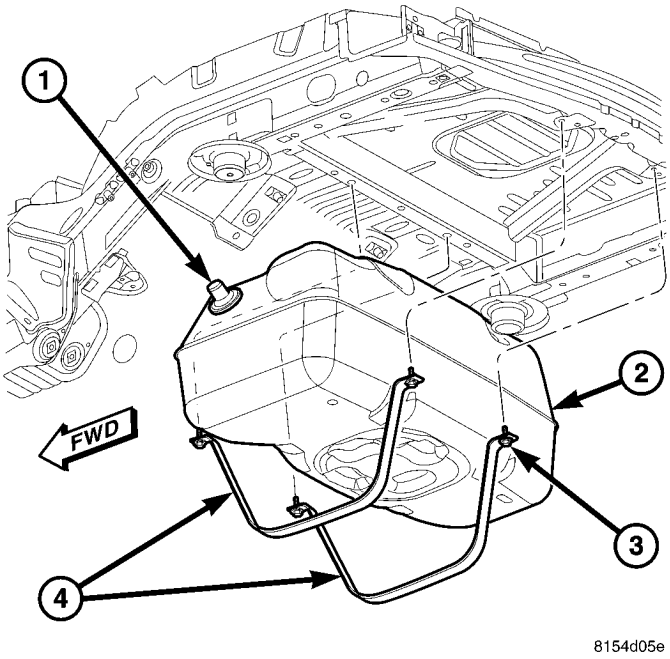

Fig. 35 FUEL TANK MOUNTING

1 - FILL FITTING
2 - FUEL TANK
3 - TANK MOUNTING BOLTS
4 - TANK MOUNTING STRAPS

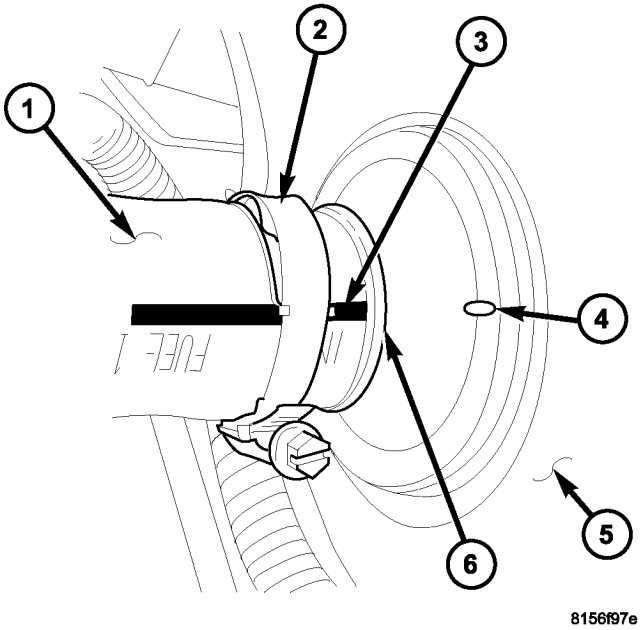

Fig. 36 FUEL FILL HOSE AT TANK

1 - FUEL FILL HOSE AT TANK
2 - HOSE CLAMP
3 - WHITE PAINTED INDEX MARK
4 - ALIGNMENT NOTCH
5 - LEFT SIDE OF FUEL TANK
6 - FUEL FILL FITTING

mark (3) on hose (Fig. 36) is located to alignment notch (4) on fuel tank fitting. Tighten clamp to 3.4 N·m (30 in. lbs.) torque.

(9) If equipped, install fuel tank skid plate, trailer hitch and tow hooks. Refer to Tow Hooks, Trailer Hitch or Skid Plate in 23, Body for removal/installation procedures.

(10) Lower vehicle.
(11) Connect negative battery cable to battery.
(12) Fill fuel tank with fuel.
(13) Start engine and check for fuel leaks.

FUEL TANK MODULE

DESCRIPTION

The fuel tank module (2) (Fig. 37) is installed in the top of the fuel tank. The fuel tank module contains the following components:

- Fuel reservoir
- A separate in-tank fuel filter
- Fuel gauge sending unit (fuel level sensor)
- A special lockring (1) (Fig. 37) to retain module to fuel tank
- Fuel supply line connections
- Fuel return line connections

A separate electric fuel pump (sometimes referred to as a low-pressure fuel transfer or lift pump) **is not attached** to the fuel tank module. Instead, a gear supply pump is mounted to the rear of the high-pressure fuel injection pump. This supply pump draws fuel under a vacuum; through the fuel filter; and from the fuel tank. Refer to Fuel Injection Pump for additional information.

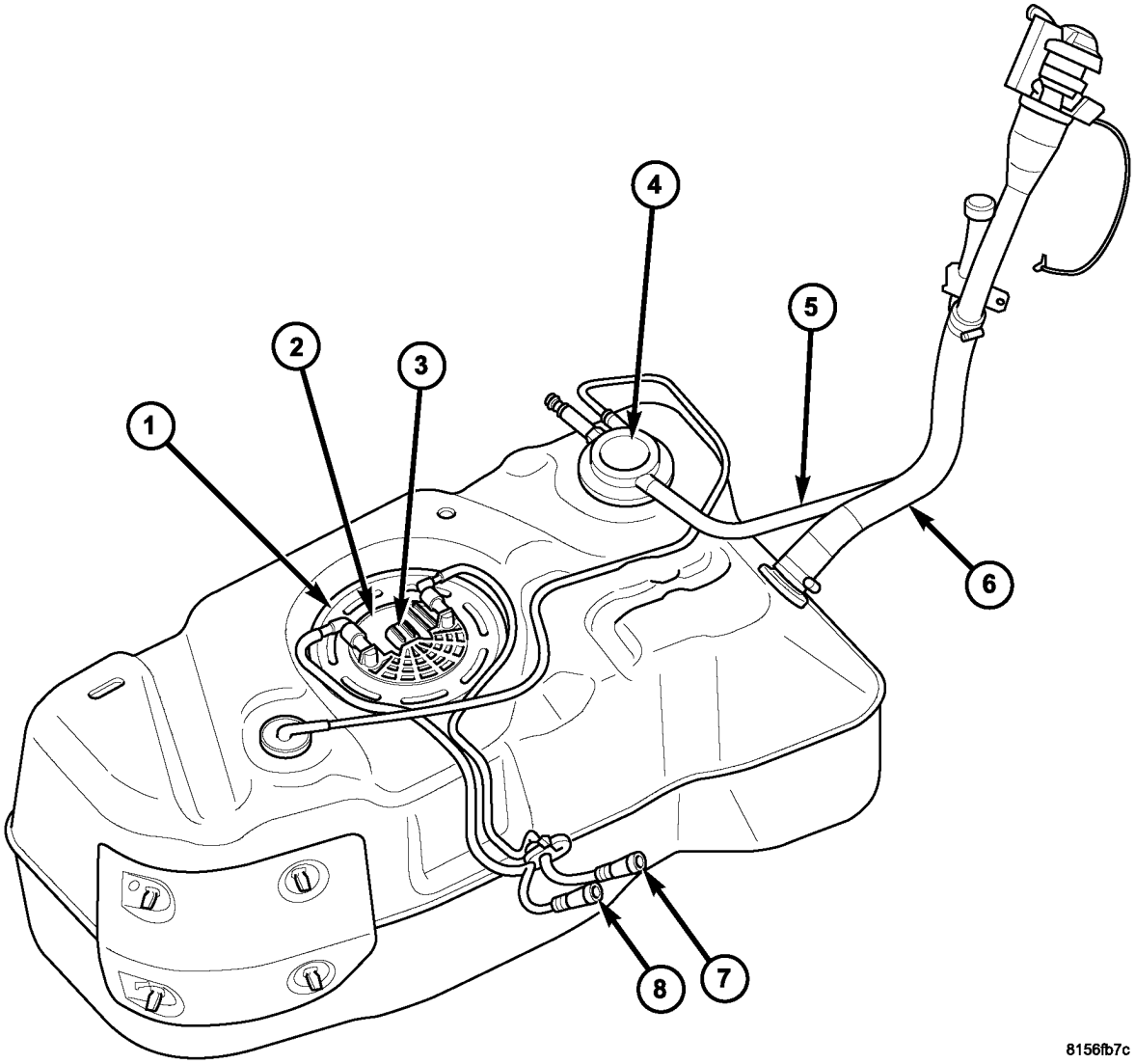

Fig. 37 FUEL TANK MODULE LOCATION-DIESEL

1 - LOCKRING
2 - FUEL TANK MODULE
3 - ELECTRICAL CONNECTOR
4 - CHECK VALVE
5 - FUEL VENT HOSE
6 - FUEL FILL HOSE
7 - FUEL RETURN LINE CONNECTION
8 - FUEL SUPPLY LINE CONNECTION

FUEL TANK MODULE (Continued)

REMOVAL

The fuel tank module (2) (Fig. 38) is located on top of the fuel tank.

(1) Drain and remove fuel tank. Refer to Fuel Tank Removal/Installation.

(2) Note rotational position of module before attempting removal. An indexing arrow is located on top of module for this purpose.

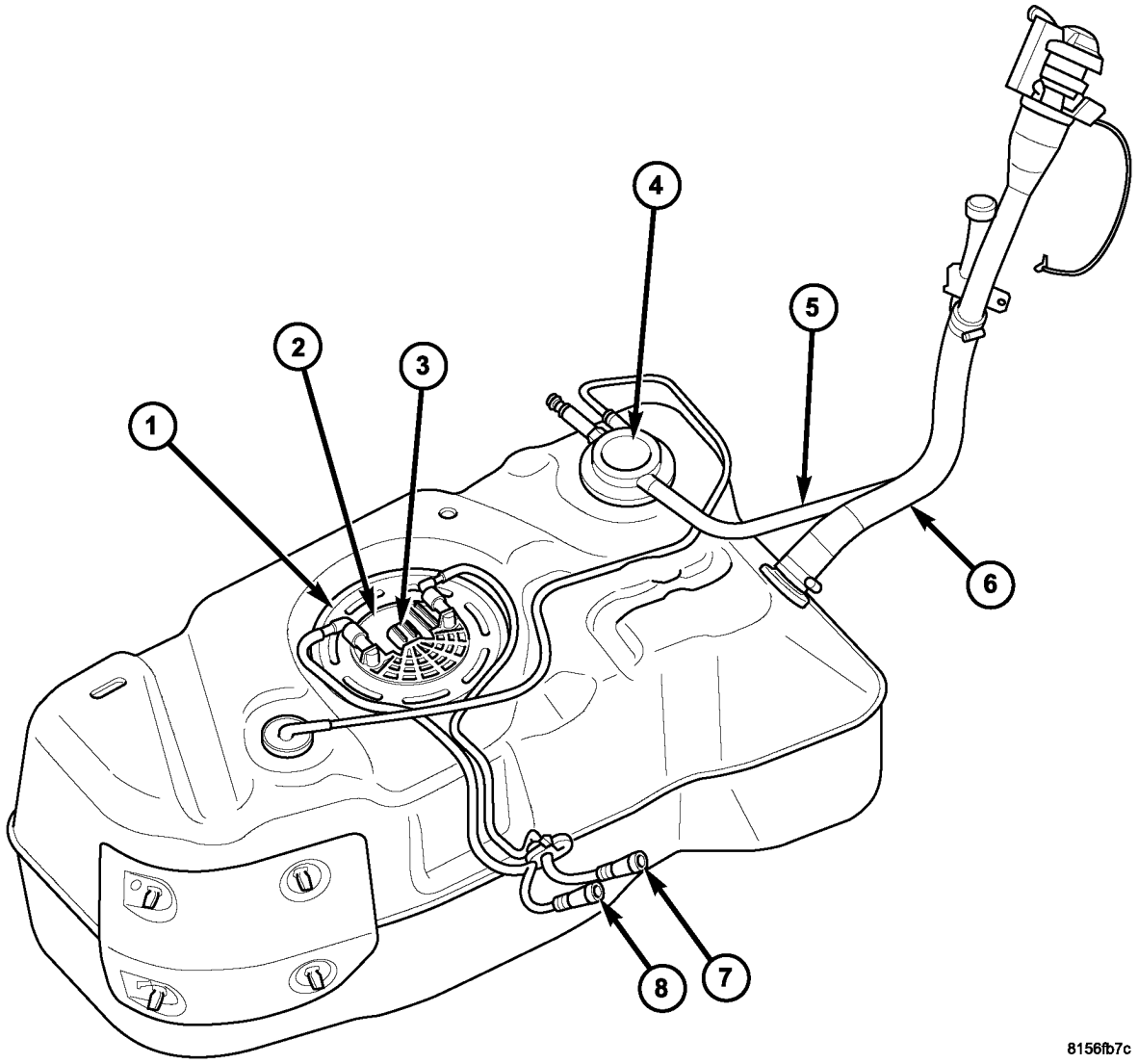

Fig. 38 FUEL TANK MODULE LOCATION-DIESEL

1 - LOCKRING
2 - FUEL TANK MODULE
3 - ELECTRICAL CONNECTOR
4 - CHECK VALVE
5 - FUEL VENT HOSE
6 - FUEL FILL HOSE
7 - FUEL RETURN LINE CONNECTION
8 - FUEL SUPPLY LINE CONNECTION

FUEL TANK MODULE (Continued)

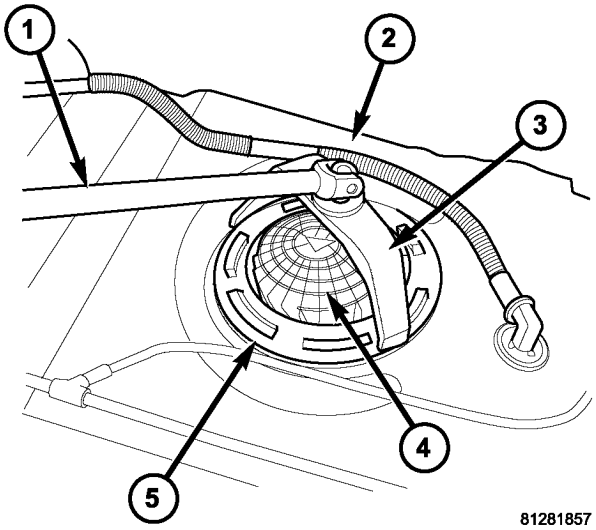

Fig. 39 FUEL TANK MODULE LOCK RING

1 - 1/2″ BREAKER BAR
2 - TOP OF FUEL TANK (TYPICAL)
3 - SPECIAL TOOL #9340
4 - FUEL TANK MODULE (TYPICAL)
5 - MODULE LOCK RING

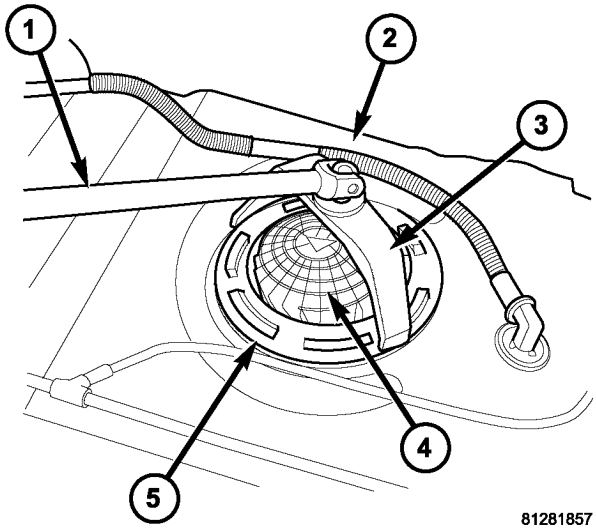

Fig. 40 FUEL TANK MODULE LOCKRING

1 - 1/2″ BREAKER BAR
2 - TOP OF FUEL TANK (TYPICAL)
3 - SPECIAL TOOL #9340
4 - FUEL TANK MODULE (TYPICAL)
5 - MODULE LOCK RING

(3) Position Special Tool 9340 (3) (Fig. 39) into notches on outside edge of lockring (5).

(4) Install 1/2 inch drive breaker bar (1) (Fig. 39) to tool 9340 (3).

(5) Rotate breaker bar counter-clockwise to remove lockring.

(6) Remove lockring. The module will spring up slightly when lockring is removed.

(7) Remove module from fuel tank. Be careful not to bend float arm while removing.

INSTALLATION

CAUTION: Whenever the fuel pump module is serviced, the rubber seal (gasket) must be replaced.

(1) Using a new seal (gasket), position fuel tank module into opening in fuel tank.

(2) Position lockring (5) (Fig. 40) over top of fuel pump module.

(3) Rotate module until embossed alignment arrow points to center alignment mark. This step must be performed to prevent float from contacting side of fuel tank. Also be sure fuel fitting on top of pump module is pointed to front of vehicle.

(4) Install Special Tool 9340 (3) to lockring.

(5) Install 1/2 inch drive breaker (1) into Special Tool 9340 (3).

(6) Tighten lockring (clockwise) until all seven notches have engaged.

(7) Install fuel tank. Refer to Fuel Tank Removal/ Installation.

FUEL INJECTION - 2.8L DIESEL

TABLE OF CONTENTS

page

ACCELERATOR PEDAL POSITION SENSOR
DESCRIPTION 78
REMOVAL 78
INSTALLATION 78
BOOST PRESSURE SENSOR
DESCRIPTION 78
OPERATION 79
DIAGNOSIS AND TESTING - BOOST PRESSURE/INTAKE AIR TEMPERATURE SENSOR 79
REMOVAL 79
INSTALLATION 79
CAMSHAFT POSITION SENSOR
DESCRIPTION 79
OPERATION 80
REMOVAL 80
INSTALLATION 80
CRANKSHAFT POSITION SENSOR
DESCRIPTION 80
OPERATION 80
REMOVAL 81
INSTALLATION 81
FUEL INJECTOR
DESCRIPTION
FUEL INJECTOR 82
OPERATION 82
STANDARD PROCEDURE
STANDARD PROCEDURE - CLEANING FUEL INJECTORS 83
STANDARD PROCEDURE - INJECTOR CLASSIFICATION 83
REMOVAL 84
INSTALLATION 85
FUEL PRESSURE SENSOR
DESCRIPTION 86
OPERATION 86
REMOVAL 86
INSTALLATION 86
FUEL PRESSURE SOLENOID
DESCRIPTION 86
OPERATION 86
REMOVAL 87
INSTALLATION 88
FUEL TEMPERATURE SENSOR
DESCRIPTION 89
OPERATION 89
REMOVAL 89
INSTALLATION 89
INTAKE AIR TEMPERATURE SENSOR
DESCRIPTION 90
OPERATION 90
REMOVAL 90
INSTALLATION 90
MASS AIR FLOW SENSOR
DESCRIPTION 90
OPERATION 91
REMOVAL 91
INSTALLATION 91

ACCELERATOR PEDAL POSITION SENSOR

DESCRIPTION

The Accelerator Pedal Position (APP) Sensor is a Hall Effect, angle of rotation sensor. The Accelerator Pedal Position sensor is located inside the accelerator pedal assembly. A magnet located in the pedal shaft cylinder rotates around a hall effect pick-up. The voltage signal increases as the accelerator pedal depresses. The APP sensor receives a 5–volt reference signal from the ECM and based upon the position of the pedal shift magnet relative to the windows on the Hall effect sensor, a portion of the 5 volts is returned to the ECM indicating pedal position.

REMOVAL

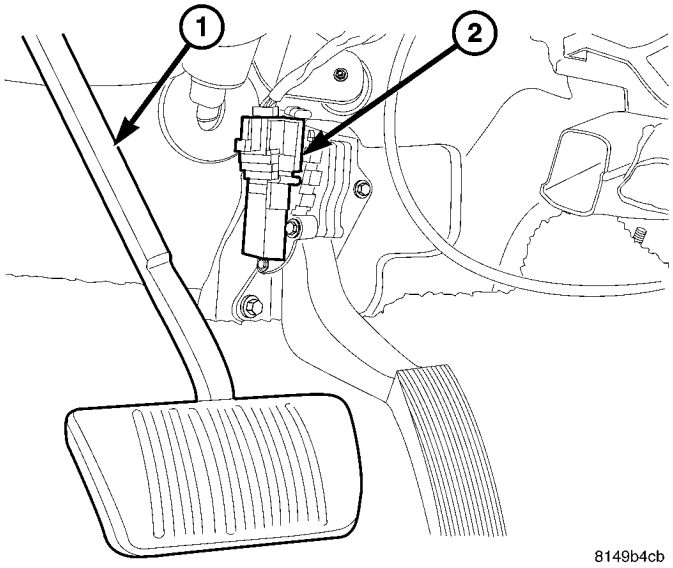

Fig. 1 ACCELERATOR PEDAL POSITION SENSOR

1 - BRAKE PEDAL
2 - APP SENSOR

(1) Disconnect negative battery cable.

(2) Disconnect accelerator pedal position sensor electrical connector (Fig. 1).

(3) Remove accelerator pedal position sensor assembly mounting bolts

(4) Open accelerator pedal position sensor assembly and disconnect accelerator cable

(5) Remove accelerator pedal position sensor assembly.

INSTALLATION

Position the APP sensor and install the fasteners hand tight (Fig. 2).

(1) Tighten the APP sensor fasteners to 10.8N·m (96 in. lbs.).

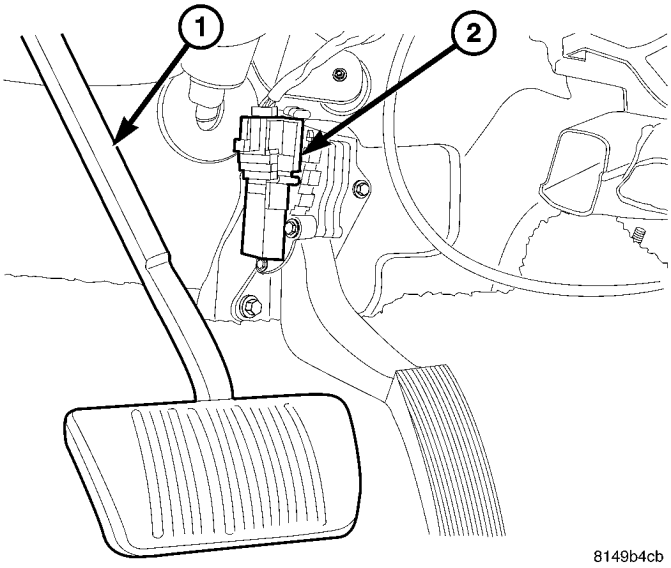

Fig. 2 ACCELERATOR PEDAL POSITION SENSOR

1 - BRAKE PEDAL
2 - APP SENSOR

(2) Connect the APP sensor wiring harness connector.

(3) Connect negative battery cable.

BOOST PRESSURE SENSOR

DESCRIPTION

The boost pressure / intake air temperature sensor is mounted to the top of the intake manifold. The sensor allows the ECM to monitor air pressure within the intake manifold. This sensor is also used to monitor the intake air temperature (Fig. 3).

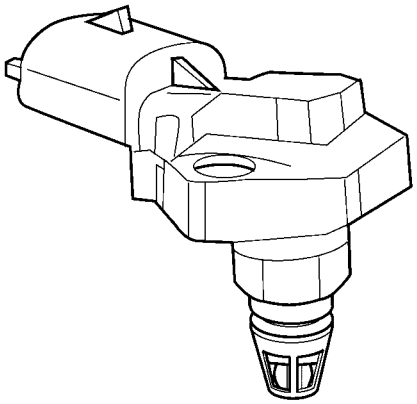

Fig. 3 BOOST PRESSURE SENSOR / INTAKE AIR TEMPERATURE SENSOR

BOOST PRESSURE SENSOR (Continued)

OPERATION

When the intake manifold pressure is low sensor voltage output is 0.25-1.8 volts at the ECM. When the intake manifold pressure is high due to turbo boost, sensor voltage output is 2.0-4.7 volts. The sensor receives a 5-volts reference from the ECM. Sensor ground is also provides by the ECM. The ECM uses boost pressure combined with intake air temerature to determine the volume of air entering the engine.

DIAGNOSIS AND TESTING - BOOST PRESSURE/INTAKE AIR TEMPERATURE SENSOR

If the boost pressure sensor fails, the ECM records a DTC into memory and continues to operate the engine in one of the three limp-in modes. When the ECM is operating in this mode, a loss of power will be present, as if the turbocharger was not operating. The best method for diagnosing faults with the boost pressure sensor is with the scan tool. Refer to the Diesel Powertrain Diagnostic Manual for more information.

REMOVAL

(1) Disconnect negative battery cable.

(2) Remove engine cover and bracket assembly (Refer to 9 - ENGINE COVER - REMOVAL).

(3) Disconnect sensor electrical connector (Fig. 4).

(4) Remove retaining bolts and remove sensor from cylinder head cover/intake manifold (Fig. 4).

INSTALLATION

(1) Install sensor and retaining bolts into cylinder head cover/intake manifold (Fig. 4). Torque to 5.4 N·m (48 in. lbs.)..

(2) Connect sensor electrical connector (Fig. 4).

(3) Install engine cover and bracket assembly (Refer to 9 - ENGINE COVER - INSTALLATION).

(4) Connect negative battery cable.

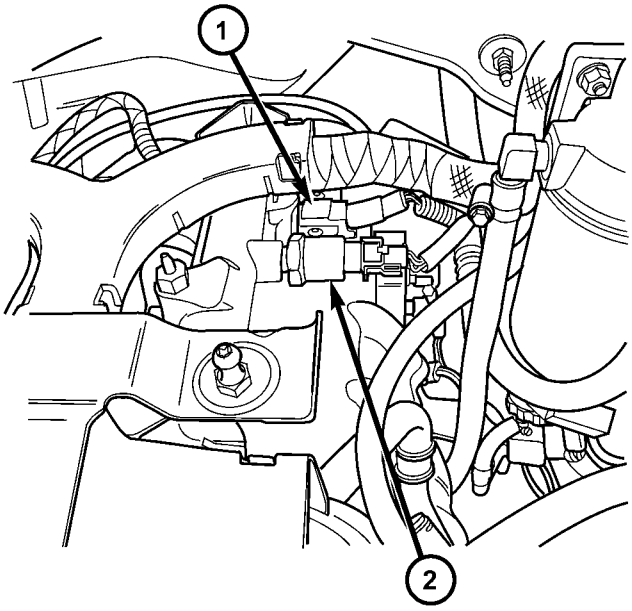

80cf1e6f

Fig. 4 SENSOR LOCATIONS

1 - BOOST PRESSURE/INTAKE AIR TEMPERATURE SENSOR
2 - FUEL RAIL PRESSURE SENSOR

CAMSHAFT POSITION SENSOR

DESCRIPTION

The camshaft position sensor is mounted on the cylinder head cover toward the rear of the engine. The camshaft sensor utilizes a non contact method on one segment of the camshaft to record the camshaft position. When the ECM receives the signal from this sensor, it can then detect TDC of cylinder number one. The signal from the camshaft sensor is only required during engine starting. Injection timing is synchronized by means of the camshaft signal and the crankshaft signal (Fig. 5).

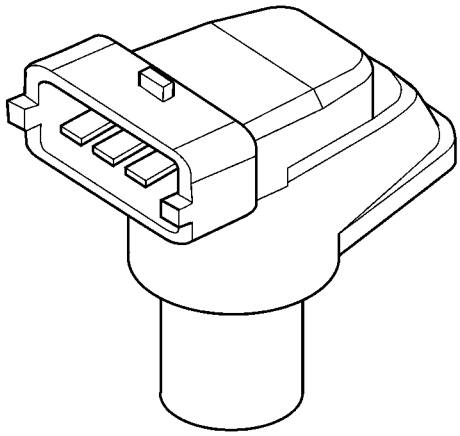

8108bc4b

Fig. 5 CAMSHAFT POSITION SENSOR

1 - WIRING HARNESS CONNECTOR
2 - CAM POSITION SENSOR
3 - O-RING
4 - CYLINDER HEAD COVER

CAMSHAFT POSITION SENSOR (Continued)

OPERATION

On the camshaft sensor's signal line, a high signal correspons to a voltage of 0-5V. If the segment machined into the exhaust camshaft sprocket is positioned opposite the camshaft sensor, the camshaft signal is low, approximately 0V. This signal is used by the engine control module (ECM) for detecting ignition TDC of cylinder 1 as the engine rotates. If no signal is supplied by the camshaft position sensor, the vehicle will not start because cylinder order can not be detected. If the signal is lost while the engine is running the vehicle will continue to run untill shut off.

REMOVAL

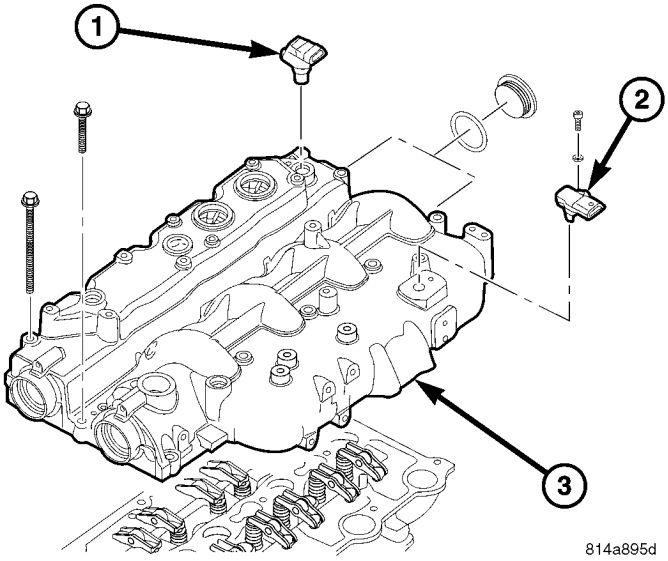

Fig. 6 CAMSHAFT POSITION SENSOR

1 - CAMSHAFT POSITION SENSOR
2 - INTAKE AIR PRESSURE/BOOST PRESSURE SENSOR

(1) Disconnect negative battery cable.
(2) Remove engine cover
(3) Disconnect camshaft position sensor electrical connector (Fig. 6).
(4) Remove retaining bolt, seal and remove sensor (Fig. 6).

INSTALLATION

(1) Install camshaft position sensor and tighten bolt to 10.8 N·m (95 in lbs.). (Fig. 7).
(2) Reconnect electrical connector (Fig. 7).
(3) Install engine cover.
(4) Reconnect negative battery cable.

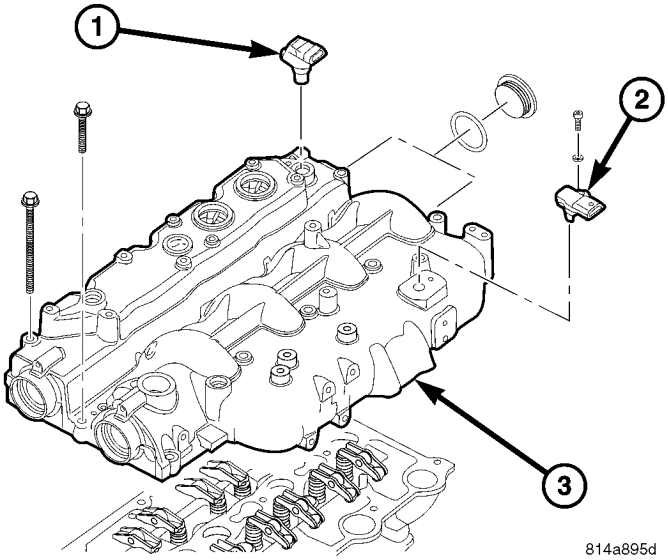

Fig. 7 CAMSHAFT POSITION SENSOR

1 - CAMSHAFT POSITION SENSOR
2 - INTAKE AIR PRESSURE/BOOST PRESSURE SENSOR

CRANKSHAFT POSITION SENSOR

DESCRIPTION

The crankshaft position sensor is mounted in the right rear of the engine block, below the turbocharger, behind a heat shield (Fig. 8). This sensor is used to detect engine speed.

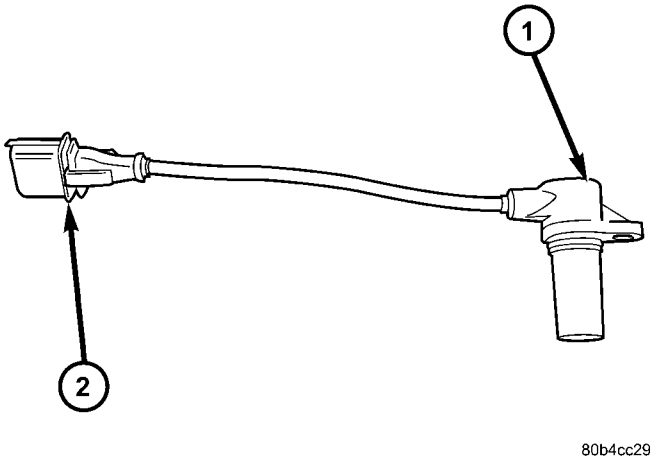

Fig. 8 CRANKSHAFT POSITION SENSOR

1 - CRANKSHAFT POSITION SENSOR
2 - CRANKSHAFT POSITION SENSOR ELECTRICAL CONNECTOR

OPERATION

The crankshaft position sensor is a magnetic pickup type sensor that generates an A/C signal. The sensor contains a permanent magnet and a coil of

CRANKSHAFT POSITION SENSOR (Continued)

wire. The sensor generates an A/C signal each time a notch in the reluctor wheel on the crankshaft passes across the permanent magnet. The ECM calculates engine speed based on the frequency of the A/C signal.

REMOVAL

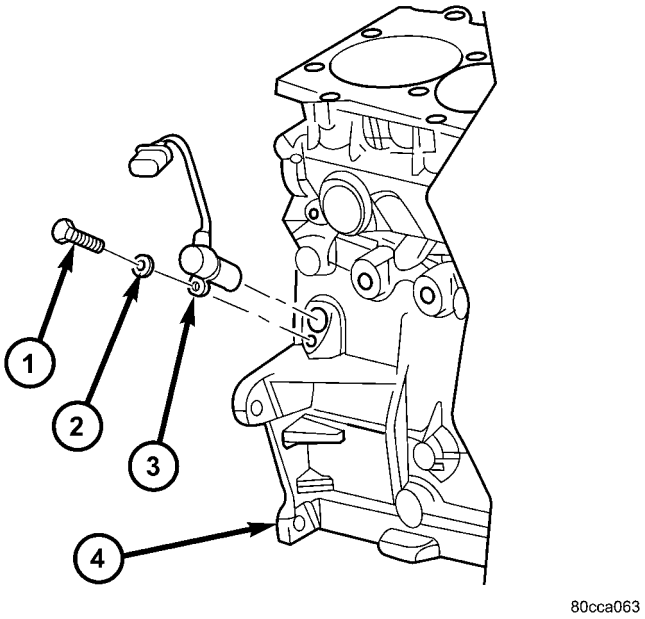

Fig. 9 CRANKSHAFT POSITION (CKP) SENSOR REMOVAL/INSTALL

1 - RETAINING BOLT
2 - WASHER
3 - CRANKSHAFT POSITION (CKP) SENSOR
4 - ENGINE BLOCK

(1) Disconnect negative battery cable.

(2) Raise vehicle on hoist.

(3) Remove exhaust pipe to turbocharger down pipe retaining bolts and lower exhaust pipe from turbocharger downpipe.

(4) Disconnect crankshaft position sensor electrical connector.

(5) Remove the heat shield.

(6) Remove crankshaft position sensor retaining bolt and remove sensor from engine block (Fig. 9).

INSTALLATION

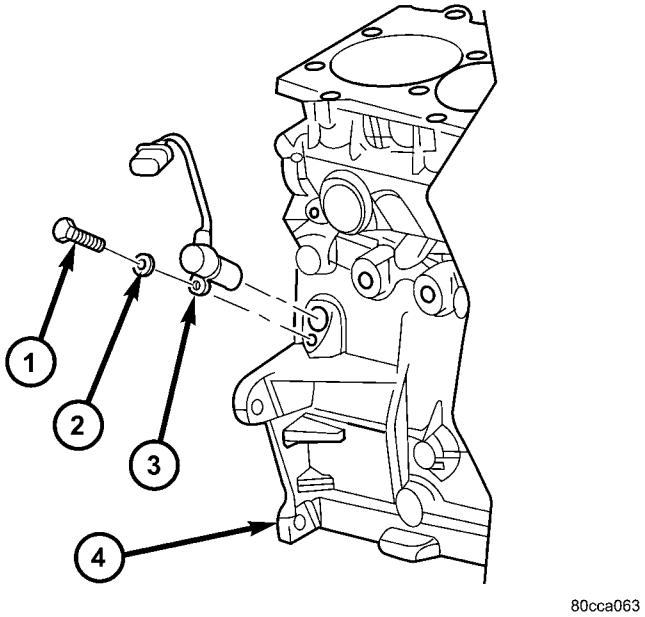

Fig. 10 CRANKSHAFT POSITION (CKP) SENSOR REMOVAL/INSTALL

1 - RETAINING BOLT
2 - WASHER
3 - CRANKSHAFT POSITION (CKP) SENSOR
4 - ENGINE BLOCK

(1) Lubricate o-ring on crankshaft position sensor and install sensor in engine block (Fig. 10).

(2) Install crankshaft position sensor retaining bolt (Fig. 10). Torque bolt to 10.8N·m.(95 in.lbs.).

(3) Connect crankshaft position sensor electrical connection.

(4) Install the heat shield. Tighten fasteners to 10.8N·m.(95 in.lbs.).

(5) Connect exhaust pipe to turbocharger downpipe. Torque bolts to 32.4N·m.(24 ft.lbs.).

(6) Lower vehicle from hoist.

(7) Connect negative battery cable.

FUEL INJECTOR

DESCRIPTION

FUEL INJECTOR

CAUTION: There is a small seal at the bottom of the injector that seals the injector to the cylinder head. This seal MUST be replaced every time the injector is serviced.

(Refer to 14 - FUEL SYSTEM - WARNING) There are individual fuel injectors for all cylinders. Each injector nozzle has seven holes. The fuel injectors are used to spray fuel into the combustion chamber. Each injector has a six digit alphanumeric code on the injector top which identifies it's calibration. This number must be entered into to ECM using the scan tool (Fig. 11). Specific moving parts inside the injector are graphite coated to assist with the lubrication process.

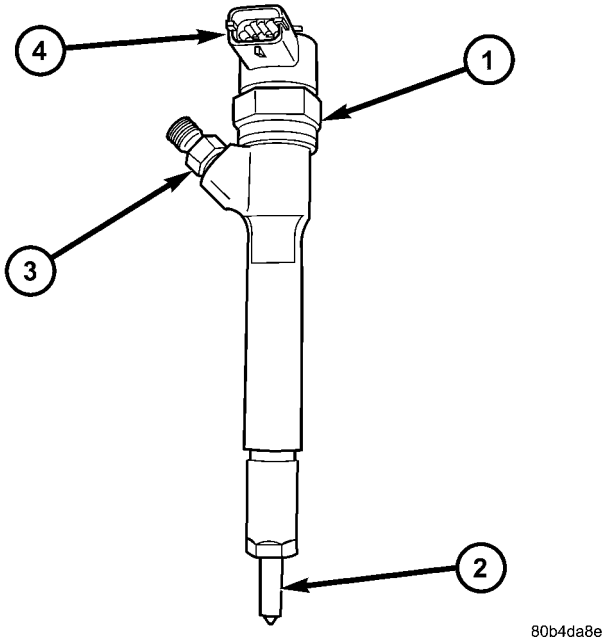

Fig. 11 FUEL INJECTOR

1 - FUEL INJECTOR
2 - NOZZLE
3 - FUEL INLET FITTING
4 - ELECTRICAL CONNECTION

OPERATION

(Refer to 14 - FUEL SYSTEM - WARNING) The injector operation can be subdivided into four operating states with the engine running and the high-pressure pump generating pressure:

- Injector closed (with high pressure applied)
- Injector opens (start of injection)
- Injector opened fully
- Injector closes (end of injection)

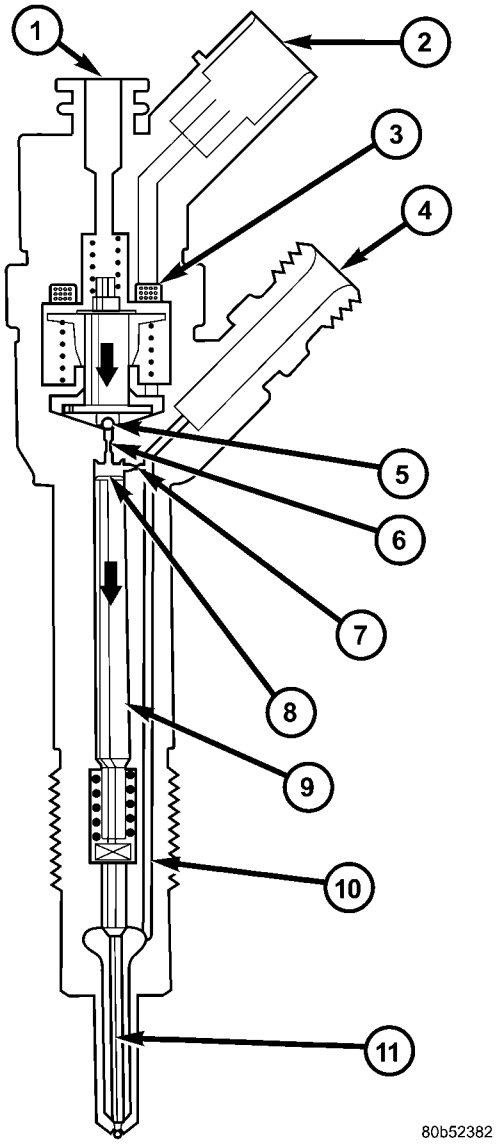

Fig. 12 INJECTOR COMPONENTS

1 - INJECTOR CLOSED (AT-REST STATUS)
2 - ELECTRICAL CONNECTION
3 - TRIGGERING ELEMENT (SOLENOID VALVE)
4 - FUEL INLET (HIGH PRESSURE) FROM THE RAIL
5 - VALVE BALL
6 - BLEED ORIFICE
7 - FEED ORIFICE
8 - VALVE CONTROL CHAMBER
9 - VALVE CONTROL PLUNGER
10 - FEED PASSAGE TO THE NOZZLE
11 - NOZZLE NEEDLE

Injector closed (with high pressure applied)

With the injector closed (at-rest state), the solenoid valve is not energized and is therefore closed. With the bleed orifice closed, the valve spring forces the armature's ball onto the bleed-orifice seat. The rail's high pressure build up in the valve control chamber,

FUEL INJECTOR (Continued)

and the same pressure is also present in the nozzle's chamber volume. The rail pressure applied at the control plunger's end face, together with the force of the nozzle spring, maintain the nozzle in the closed position against the opening forces applied to its pressure stage (Fig. 12).

Injector opens (start of injection)

The solenoid valve is energized with the pickup current which serves to ensure that it open quickly. The force exerted by the triggered solenoid now exceeds that of the valve spring and the armature opens the bleed orifice. Almost immediately, the high-level pick-up current is reduced to the lower holding current required for the electromagnet. This is possible due to the magnetic circuit's air gap now being smaller. When the bleed orifice opens, fuel can flow from the valve control chamber into the cavity situated above it, and from there via the fuel return to the tank. The bleed orifice prevents complete pressure balance, and the pressure in the valve control chamber sinks as a result. This leads to the pressure in the valve-control chamber being lower than that in the nozzle's chamber volume which is still at the same pressure level as the rail. The reduced pressure in the valve-control chamber causes a reduction in the force exerted on the control plunger, the nozzle needle opens as a result, and injection starts (Fig. 12).

Injector opens fully

The control plunger reaches its upper stop where it remains supported by a cushion of fuel which is generated by the flow of fuel between the bleed and feed orifices. The injector nozzle has now opened fully, and the fuel is injected into the combustion chamber at a pressure almost equal to that in the fuel rail (Fig. 12).

Injector closes (end of injection)

As soon as the solenoid valve is no longer triggered, the valve spring forces the armature downwards and the ball closes the bleed orifice. The armature is a 2–piece design. Here, although the armature plate is guided by a driver shoulder in its downward movement, it can "overspring" with the return spring so that it exerts no downwards-acting forces on the armature and the ball. The closing of the bleed orifice lead to pressure build up in the control chamber via the input from the feed orifice. This pressure is the same as that in the rail and exerts an increased force on the control plunger through its end face. This force, together with that of the spring, now exceeds the force exerted by the chamber volume and the nozzle needle closes. Injection ceases as soon as the nozzle needle comes up against its bottom stop again (Fig. 12).

STANDARD PROCEDURE

STANDARD PROCEDURE - CLEANING FUEL INJECTORS

NOTE: Before cleaning the injector recesses, seal the injector holes in the injector recesses with the appropriate pin to prevent debris from falling into the recesses and entering the motor.

(1) Seal the injector holes inside the cylinder head recesses.
(2) Wipe out injector recesses with a non-woven cloth, then clean with a cylinder brush.
(3) Clean the bottom of the cylinder recess with a round brush.
(4) Blow out the recess and clean again with a non-woven cloth and cover over.
(5) Perform these steps for each injector recess.

NOTE: DO NOT clean the tip of the injector with a wire brush. Use a non - woven cloth.

(6) Clean injector body with a wire brush.
(7) Clean injector tips with a non-woven cloth.

NOTE: Do Not apply antiseize lubricant to the injector nozzle area.

(8) Grease injector body with anti seize lubricant.

NOTE: Always replace the seals that seal off the injectors at the cylinder head to the combustion chamber and replace the retaining screws.

STANDARD PROCEDURE - INJECTOR CLASSIFICATION

NOTE: Fuel Injectors have different flow rates. When ALL injectors are removed, re-enter all injector six digit codes.

The classification of injectors into 3 classes describes the quantity characteristic of the injector. This will make it possible in the future to match the engine software to the tolerances of the injector within a more narrowly graduated range. Classification can be clearly recognized, and assigned only by means of a scan tool.

Classified injectors can be recognized by the part number and identification on the magnetic head (circle with a number between 1 and 3 inside) (Fig. 13). The number corresponds to the classification stage.

FUEL INJECTOR (Continued)

These general conditions equally apply if, as a result of replacing an engine, carrying out repairs to the cylinder head etc., the cylinder selective assignment of the injectors or the engine control module assignment may have changed. If proper attention is not paid to the classification on these vehicles driveability and smoking concerns could result.

If an injector is replaced, it is then necessary to assign the classification number to the corresponding cylinder with the scan tool in the control module.

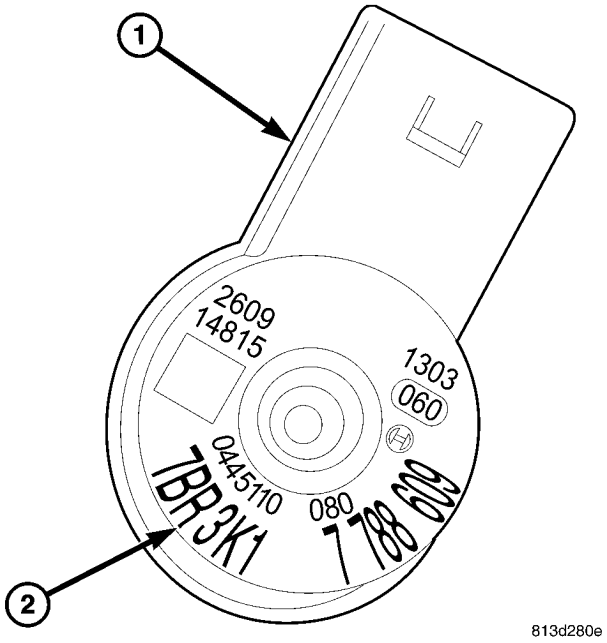

Fig. 13 INJECTOR CLASSIFICATION MARKINGS

1 - ELECTRICAL CONNECTOR
2 - SIX-DIGIT ALPHANUMERIC CODE

INJECTOR CLASSIFICATION PROCEDURE

(1) Turn ignition switch “ON”.

(2) Using a scan tool, select ENGINE then MISCELLANEOUS.

(3) Select LEARN INJECTORS.

(4) Using the up and down arrows, scroll to the appropriate injector.

(5) Using the right and left arrows, set injector to proper classification.

(6) Once injectors are classified, cycle ignition to complete.

REMOVAL

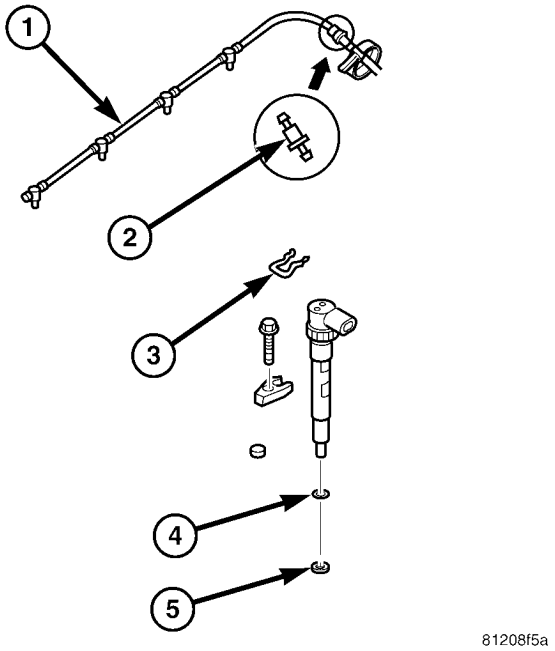

Fig. 14 FUEL INJECTOR AND COMPONENTS

1 - FUEL RETURN LINE
2 - ONE WAY VALVE
3 - RETAINING RING
4 - WASHER
5 - O-RING

(1) Review the High Pressure Fuel System Warning (Refer to 14 - FUEL SYSTEM - WARNING).

(2) Disconnect negative battery cable.

(3) Remove engine cover (Refer to 9 - ENGINE - REMOVAL).

(4) Disconnect injector electrical connector.

CAUTION: Repeated mounting of the retaining ring is not permitted.

(5) Remove fuel return line from injector (Fig. 14).

(6) Remove fuel injector high pressure line (Refer to 14 - FUEL SYSTEM - WARNING) (Fig. 14).

(7) Remove fuel injector retainer and retaining bolt (Fig. 14).

NOTE: DO NOT use a wire brush to clean the fuel injector or nozzle. Possible restriction of the injector needle may result.

(8) Remove fuel injector from cylinder head (Fig. 14).

FUEL INJECTOR (Continued)

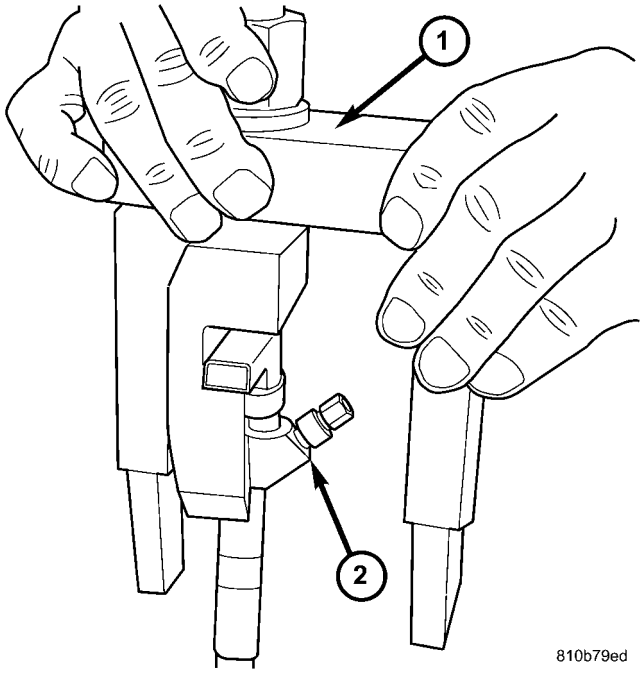

Fig. 15 SPECIAL TOOL VM9075

1 - VM9075
2 - FUEL INJECTOR

CAUTION: If the fuel injectors will not come out of the cylinder head, perform the following steps to prevent damaging other components.

(9) Assemble and install Injector extractor special tool VM 9075A on to injector and cylinder head (Fig. 15).

INSTALLATION

WARNING: HIGH - PRESSURE LINES DELIVER DIESEL FUEL UNDER EXTREME PRESSURE FROM THE INJECTION PUMP TO THE FUEL INJECTORS. THIS MAY BE AS HIGH AS 1600BAR (23,200 PSI.). USE EXTREME CAUTION WHEN INSPECTING FOR HIGH - PRESSURE FUEL LEAKS. FUEL UNDER THIS AMOUNT OF PRESSURE CAN PENETRATE SKIN CAUSING PERSONAL INJURY OR DEATH. INSPECT FOR HIGH — PRESSURE FUEL LEAKS WITH A SHEET OF CARDBOARD. WEAR SAFETY GOGGLES AND ADEQUATE PROTECTIVE CLOTHING WHEN SERVICING FUEL SYSTEM.

NOTE: DO NOT use a brush to clean around the injector nozzle. DO NOT lubricate area around injector nozzle. The injector may become restricted with debris.

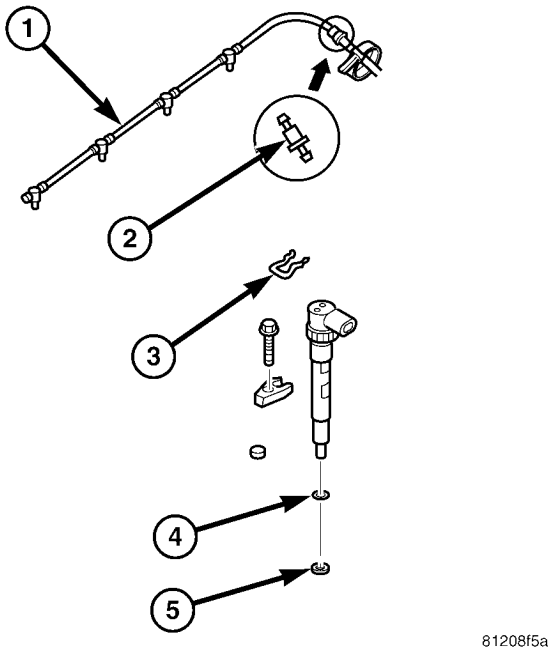

Fig. 16 FUEL INJECTOR AND COMPONENTS

1 - FUEL RETURN LINE
2 - ONE WAY VALVE
3 - RETAINING RING
4 - WASHER
5 - O-RING

NOTE: Be sure a new copper washer/seal is installed on end of injector before installing in cylinder head.

NOTE: Apply antiseize compound to injector body.

(1) Install fuel injector in cylinder head with new seal and O-ring.
(2) Install fuel injector retainer and bolt (Fig. 16). Torque bolt to 32.4 N·m.
(3) Install fuel injector high pressure line.
(4) Install fuel return line to injector (Fig. 16).
(5) Connect fuel injector electrical connector.
(6) Install engine cover and bracket assembly (Refer to 9 - ENGINE COVER - INSTALLATION).
(7) Connect negative battery cable.
(8) Start the engine, allow to warm, **Turn Off the Ignition**, Inspaect for leaks.

FUEL PRESSURE SENSOR

DESCRIPTION

WARNING: HIGH - PRESSURE FUEL LINE DELIVER DIESEL FUEL UNDER EXTREME PRESSURE FROM THE INJECTION PUMP TO THE FUEL INJECTORS. THIS MAY BE AS HIGH AS 1600BAR (23,200PSI). USE EXTREME CAUTION WHEN INSPECTING FOR HIGH - PRESSURE FUEL LEAKS. FUEL UNDER THIS AMOUNT OF PRESSURE CAN PENETRATE SKIN CAUSING PERSONAL INJURY OR DEATH. INSPECT FOR HIGH - PRESSURE LEAKS WITH A SHEET OF CARDBOARD. WEAR SAFETY GOGGLES AND ADEQUATE PROTECTIVE CLOTHING WHEN SERVICING FUEL SYSTEM.

The fuel rail pressure sensor screws into the fuel rail at the top of the engine (Fig. 17). The ECM uses this sensor to monitor the fuel rail pressure.

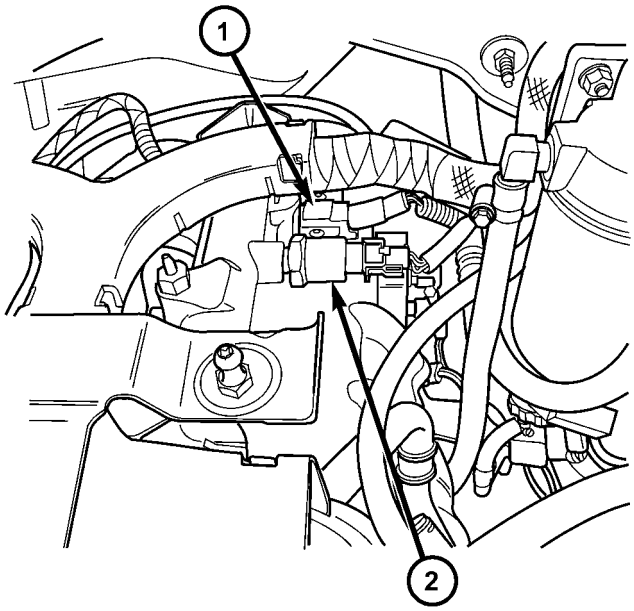

Fig. 17 SENSOR LOCATIONS

1 - BOOST PRESSURE/INTAKE AIR TEMPERATURE SENSOR
2 - FUEL RAIL PRESSURE SENSOR

OPERATION

Review the high pressure fuel system warning (Refer to 14 - FUEL SYSTEM - WARNING).

The fuel flows to the fuel pressure sensor through an opening in the rail, the end of which is sealed off by the sensor diaphragm. Pressurized fuel reaches the sensor's diaphragm through a blind hole. The sensor element (semiconductor device) converts the pressure to an electric signal is mounted on this diaphragm. The signal generated by the sensor is sent to the ECM.

REMOVAL

(1) Disconnect negative battery cable.

(2) Remove engine cover (Refer to 9 - ENGINE COVER - REMOVAL).

(3) Disconnect fuel pressure sensor electrical connector (Fig. 17).

(4) Remove fuel pressure sensor from fuel rail (Fig. 17).

INSTALLATION

WARNING: HIGH - PRESSURE LINES DELIVER DIESEL FUEL UNDER EXTREME PRESSURE FROM THE INJECTION PUMP TO THE FUEL INJECTORS. THIS MAY BE AS HIGH AS 1600BAR (23,200 PSI.). USE EXTREME CAUTION WHEN INSPECTING FOR HIGH - PRESSURE FUEL LEAKS. FUEL UNDER THIS AMOUNT OF PRESSURE CAN PENETRATE SKIN CAUSING PERSONAL INJURY OR DEATH. INSPECT FOR HIGH — PRESSURE FUEL LEAKS WITH A SHEET OF CARDBOARD. WEAR SAFETY GOGGLES AND ADEQUATE PROTECTIVE CLOTHING WHEN SERVICING FUEL SYSTEM.

(1) Install fuel pressure sensor in fuel rail. Tighten sensor to 35 N·M (26 ft.lbs.). (Fig. 17).

(2) Connect fuel pressure sensor electrical connector (Fig. 17).

(3) Install engine cover (Refer to 9 - ENGINE COVER - INSTALLATION).

(4) Connect negative battery cable.

FUEL PRESSURE SOLENOID

DESCRIPTION

The fuel pressure solenoid is attached to the rear of the fuel rail. The tip of the fuel pressuer solenoid uses a knife edge, for metal to metal sealing. The knife edge actually deforms the metal in the fuel rail in order to seal the surfaces. The solenoid must be replaced when ever it is removed from the rail. The solenoid controls and maintains the rail pressure constant along with a control current transmitted by the engine control module (ECM) (Fig. 18).

OPERATION

High pressure which is present in the fuel rail flows to the ball seat of the pressure solenoid (Fig. 19). The specified pressure required by the system is built up in the rail by the fuel pressure solenoid

FUEL PRESSURE SOLENOID (Continued)

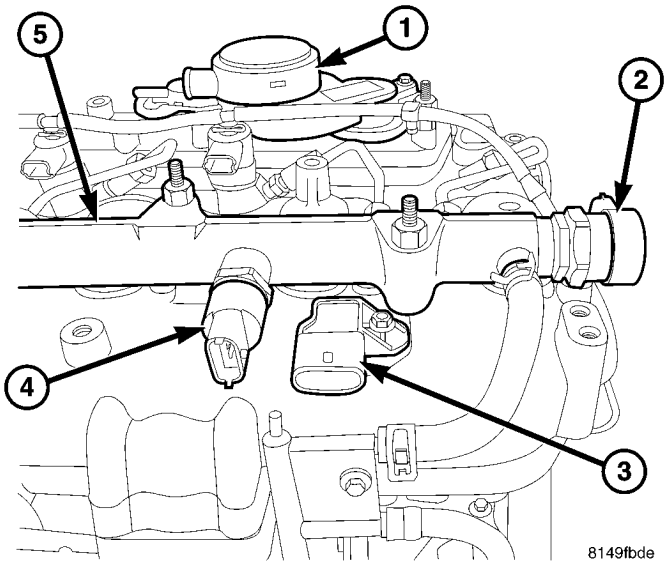

Fig. 18 FUEL RAIL PRESSURE SOLENOID

1 - CRANKCASE VENILATION
2 - FUEL RAIL PRESSURE SOLENOID
3 - INTAKE AIR PRESSURE/BOOST PRESSURE SENSOR
4 - FUEL RAIL PRESSURE SENSOR
5 - FUEL RAIL

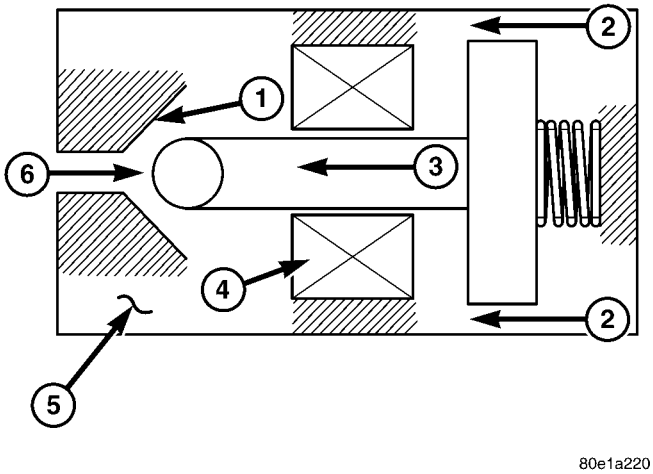

Fig. 19 FUEL PRESSURE SOLENOID OPERATION

1 - BALL SEAT
2 - SPRING FORCE
3 - MAGNETIC FORCE
4 - COIL
5 - FUEL PRESSURE SOLENOID
6 - HIGH PRESSURE SUPPLY

building up a magnetic force which corresponds to this specific pressure by means of a control current from the Electronic Control Module (ECM) (Fig. 19). This magnetic force equals a certain outlet cross section at the ball seat of the valve. The rail pressure is altered as a result of the quantity of fuel which flows off (Fig. 19). The current fuel pressure is signaled by the fuel rail pressure sensor to the engine control module (ECM). The controlled fuel flows back along the return fuel line, into the tank.

In a de-energized state, the fuel pressure solenoid is closed as the spring force presses the ball into the ball seat (Fig. 19). When driving, the fuel pressure solenoid is constantly open (Fig. 19). When engine is started, the fuel pressure solenoid is held closed by magnetic force (Fig. 19). When driving, the pressure of the fluid counteracts the magnetic force of the coil and the slight spring force (Fig. 19).

REMOVAL

Review the high pressure fuel system warning before beginning repair (Refer to 14 - FUEL SYSTEM - WARNING)

WARNING: NO SPARKS, OPEN FLAMES OR SMOKING. RISK OF POISONING FROM INHALING AND SWALLOWING FUEL. RISK OF INJURY TO EYES AND SKIN FROM CONTACT WITH FUEL. POUR FUELS ONLY INTO SUITABLE AND APPROPRIATELY MARKED CONTAINERS. WEAR PROTECTIVE CLOTHING.

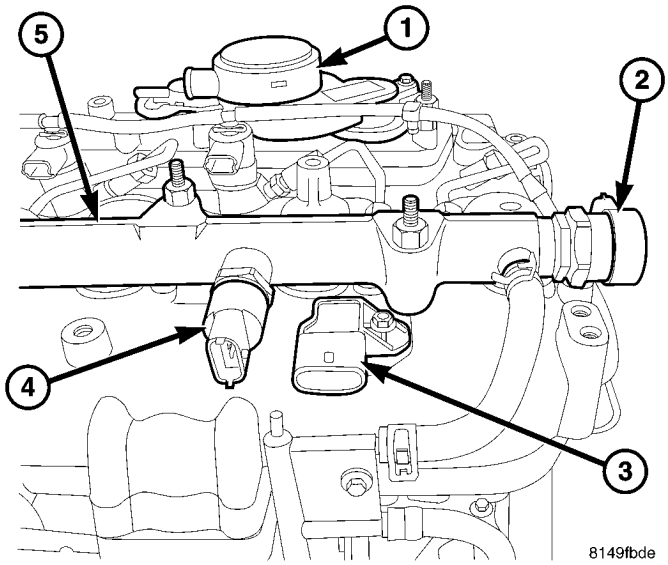

Fig. 20 FUEL RAIL PRESSURE SOLENOID

1 - CRANKCASE VENILATION
2 - FUEL RAIL PRESSURE SOLENOID
3 - INTAKE AIR PRESSURE/BOOST PRESSURE SENSOR
4 - FUEL RAIL PRESSURE SENSOR
5 - FUEL RAIL

(1) Disconnect negative battery cable.

(2) Remove fuel rail (Refer to 14 - FUEL SYSTEM/FUEL INJECTION/FUEL INJECTOR - REMOVAL).

(3) Clamp fuel rail securely in vise with protective jaws.

FUEL PRESSURE SOLENOID (Continued)

CAUTION: Once removed, the solenoid must always be replaced.

(4) Counterhold and unscrew the fuel pressure solenoid (Fig. 20).

INSTALLATION

Review the high pressure fuel system warning before beginning repair (Refer to 14 - FUEL SYSTEM - WARNING)

WARNING: NO SPARKS, OPEN FLAMES OR SMOKING. RISK OF POISONING FROM INHALING AND SWALLOWING FUEL. RISK OF INJURY TO EYES AND SKIN FROM CONTACT WITH FUEL. POUR FUELS ONLY INTO SUITABLE AND APPROPRIATELY MARKED CONTAINERS. WEAR PROTECTIVE CLOTHING.

CAUTION: There is a special tightening procedure for the fuel rail solenoid that must be followed along with the proper use of a torque wrench. Therefore the fuel rail must be removed before installing the fuel pressure solenoid.

(1) Position the fuel rail into a soft jawed vise.

(2) Screw the fuel pressure solenoid to the fuel rail until hand tight.

(3) Tighten the fuel rail solenoid as follows :

- Tighten the nut to 60 N·m (44 ft. lbs.)
- Loosen the nut 90 degrees.
- Retighten the nut to 80 N·m (59 ft. lbs.) (Fig. 21).

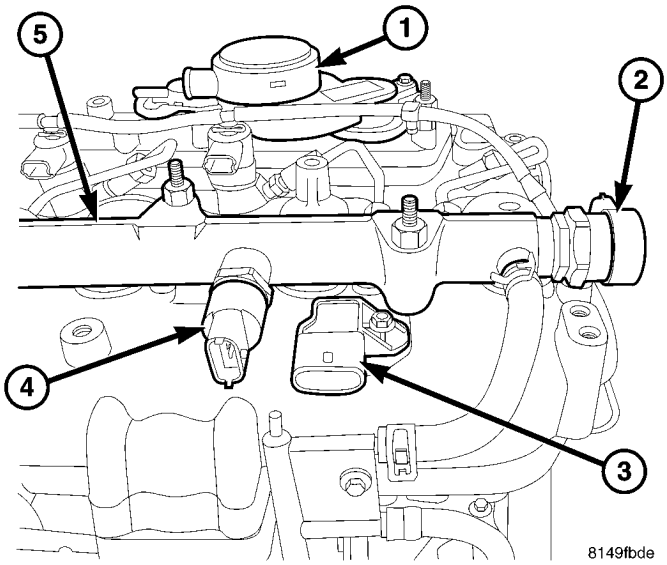

Fig. 21 FUEL RAIL PRESSURE SOLENOID

1 - CRANKCASE VENILATION
2 - FUEL RAIL PRESSURE SOLENOID
3 - INTAKE AIR PRESSURE/BOOST PRESSURE SENSOR
4 - FUEL RAIL PRESSURE SENSOR
5 - FUEL RAIL

(4) Install fuel rail (Refer to 14 - FUEL SYSTEM/FUEL INJECTION/FUEL INJECTOR - INSTALLATION).

(5) Connect negative battery cable.

(6) Start engine, allow to warm, turn engine off and inspect for leaks (Refer to 14 - FUEL SYSTEM - DIAGNOSIS AND TESTING).

FUEL TEMPERATURE SENSOR

DESCRIPTION

The fuel temperature sensor is integrated into the fuel filter housing, along side of the fuel heater. The sensor detects the temperature of the fuel and supplies that information to the ECM. The sensor ranges from - 40°F (- 40C) to 284°F (140°C). If the engine is cold, the actual value sent will read ambient temperature. The value rises after the engine has been started. The fuel temerature sensor IS NOT SERVICED separate from the housing assembly.

OPERATION

An negative temperature coefficient (NTC) resistor integrated in the fuel temperature sensor alters it's electrical resistance in line with the fuel temperature (the resistance drops as the temperature rises). The ECM uses this reading to calculate optimum engine performance under all driving conditions. If the fuel is to warm, the rail pressure in the system is lowered. The controlled quantity of the fuel rail pressure solenoid is reduced and the fuel temperature is lowered (Fig. 22).

REMOVAL

WARNING: STORE FUEL IN APPROVED AND PROPERLY MARKED CONTAINERS. WEAR SAFETY GOGGLES AND ADEQUATE PROTECTIVE CLOTHING WHEN SERVICING FUEL SYSTEM.

(1) The fuel temperature sensor is serviced as an assembly along with the fuel heater (Refer to 14 - FUEL SYSTEM/FUEL DELIVERY/FUEL HEATER - REMOVAL).

INSTALLATION

(1) The fuel temperature sensor is serviced along with the fuel heater (Refer to 14 - FUEL SYSTEM/FUEL DELIVERY/FUEL HEATER - INSTALLATION).

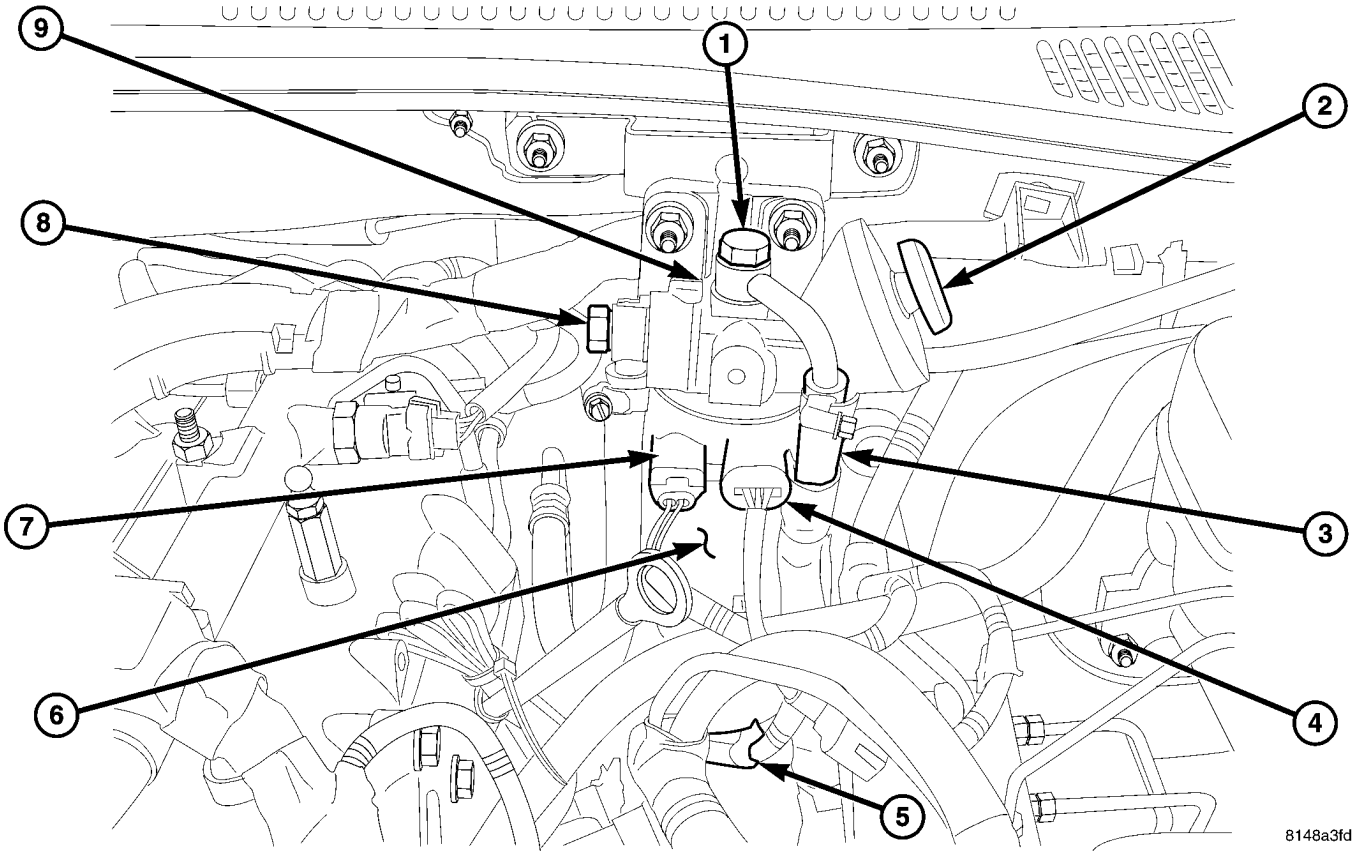

Fig. 22 FUEL FILTER/WATER SEPARATER

1 - FUEL FILTER ASSEMBLY
2 - PRIMER BUTTON
3 - FUEL SUPPLY TO HIGH PRESSURE PUMP
4 - FUEL HEATER
5 - WIF SENSOR
6 - FUEL FILTER
7 - FUEL TEMPERATURE SENSOR
8 - FUEL SUPPLY FROM TANK
9 - AIR BLEED SCREW

INTAKE AIR TEMPERATURE SENSOR

DESCRIPTION

The boost pressure / intake air temperature sensor is mounted to the top of the intake manifold. The sensor allows the ECM to monitor air pressure within the intake manifold. This sensor is also used to monitor the intake air temperature (Fig. 23).

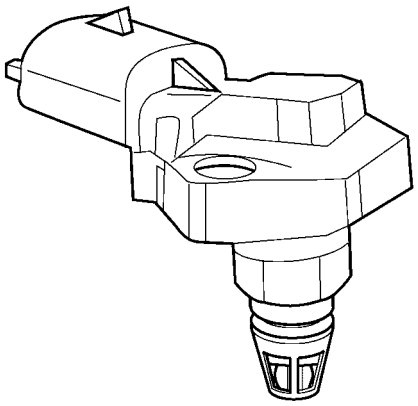

8100a221

Fig. 23 BOOST PRESSURE SENSOR / INTAKE AIR TEMPERATURE SENSOR

OPERATION

The intake air temperature sensor is a negative temperature coefficient (NTC) thermistor (resistance varies inversely with temperature). This means at cold air temperature its resistance is high, so the voltage signal will be high. As intake air temperature increases, sensor resistance decreases and the signal voltage will be low. This allows the sensor to provide an analog voltage signal (0.2-4.8 volts) to the ECM.

REMOVAL

(1) (Refer to 14 - FUEL SYSTEM/FUEL INJECTION/BOOST PRESSURE SENSOR - REMOVAL)

INSTALLATION

(1) (Refer to 14 - FUEL SYSTEM/FUEL INJECTION/BOOST PRESSURE SENSOR - INSTALLATION)

MASS AIR FLOW SENSOR

DESCRIPTION

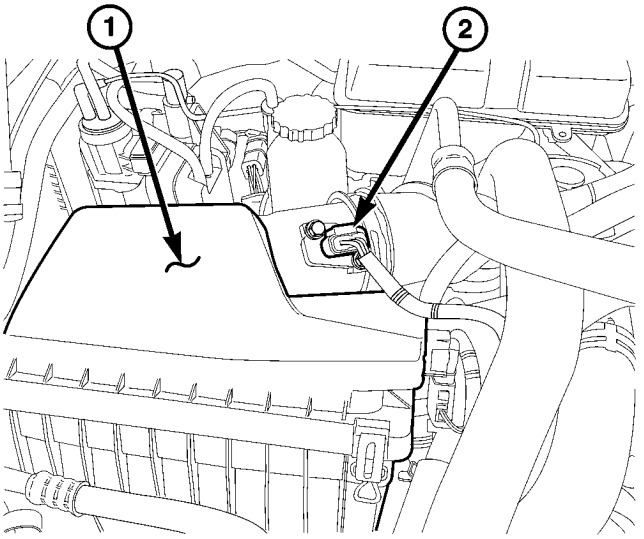

814a0112

Fig. 24 MASS AIR FLOW SENSOR

1 - AIR CLEANER COVER
2 - MAF SENSOR

The Mass Air Flow (MAF) Sensor is located on the air cleaner cover. The MAF sensor uses semiconductor technology throughout, and is used to calculate the air mass flowing past it per time unit. This mass is important for determining the exhaust gas recirculation rate. The MAF sensor sends a corresponding signal to the ECM, which evaluates the signal to adjust the EGR air flow control valve. (Fig. 24).

MASS AIR FLOW SENSOR (Continued)

OPERATION

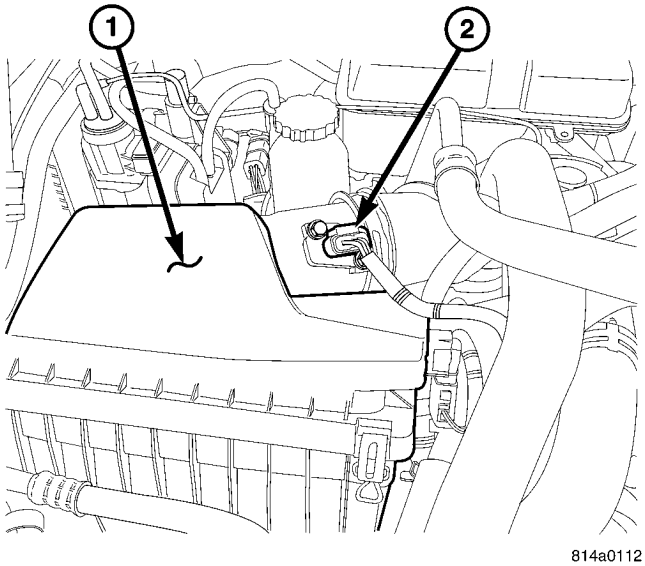

Fig. 25 MANIFOLD AIR FLOW SENSOR

1 - AIR CLEANER COVER
2 - MAF SENSOR

The ECM uses the mass air flow (MAF) sensor to measure air density. The temperature resistor located at the front of the MAF sensor measures the temperature of the inlet air. By varying the voltage, the electronic circuit regulates the temperature of the heating resistor in the rear so that it is 320° F (160°C) higher than the temperature of the intake air. The temperature at the heating resistor is measured by a sensor resistor in-between.

Because the incoming air has a cooling effect, the greater the amount of air that flows in, then the higher the voltage of the heating resistor. The heating resistor is therefore a measure of mass of air flowing past. If a temperature change occurs as a result of a increase or reduction of air flow, the ECM corrects the voltage at the heating resistor until the temperature difference is again achieved. This control voltage is use by the ECM as a unit measure for metered air mass (Fig. 25).

REMOVAL

The Mass Air Flow (MAF) sensor is serviced along with the air cleaner cover.

INSTALLATION

The Mass Air Flow (MAF) sensor is serviced along with the air cleaner cover.

STEERING

TABLE OF CONTENTS

page

STEERING
DESCRIPTION 1
OPERATION 1
DIAGNOSIS AND TESTING
DIAGNOSIS AND TESTING - POWER STEERING SYSTEM 2
DIAGNOSIS AND TESTING - POWER STEERING FLOW AND PRESSURE 4
COLUMN 5
GEAR 15
LINKAGE 23
PUMP 24

STEERING

DESCRIPTION

Power steering systems consist of:

- Steering column & Intermediate Shaft
- Rack and pinion steering gear
- Belt driven hydraulic steering pump
- Pump pressure, supply and return hoses
- Oil Cooler

OPERATION

The steering column intermediate shaft attaches the steering column to the gear pinion. The rotation of the pinion moves the gear rack from side-to-side. This lateral action of the rack pushes and pulls the tie rods to change the direction of the front wheels.

Power assist is provided by an engine mounted hydraulic pump. The pump supplies hydraulic fluid to the steering gear. All 2.4L and only 3.7L vehicles with trailer tow option are equipped with an oil cooler.

STEERING (Continued)

DIAGNOSIS AND TESTING

DIAGNOSIS AND TESTING - POWER STEERING SYSTEM

There is some noise in all power steering systems. One of the most common is a hissing sound evident at a standstill/parking, or when the steering is at the end of it's travel. Hiss is a high frequency noise similar to that of a water tap being closed slowly. The noise is present in all valves that have a high velocity fluid passing through an orifice. There is no relationship between this noise and steering performance.

STEERING NOISE

CONDITION	POSSIBLE CAUSES	CORRECTION
OBJECTIONAL HISS OR WHISTLE	1. Steering intermediate shaft to dash panel seal. 2. Noisy valve in power steering gear.	1. Check and repair seal at dash panel. 2. Replace steering gear.
RATTLE OR CLUNK	1. Gear mounting bolts loose. 2. Loose or damaged suspension components. 3. Internal gear noise. 4. Loose or damaged intermediate shaft or column.	1. Tighten bolts to specification. 2. Inspect and repair suspension. 3. Replace steering gear. 4. Inspect and repair or replace.
MOAN	Pressure hose in contact with other components.	Reposition hose.
CHIRP OR SQUEAL	1. Loose belt.	1. Adjust or replace.
WHINE OR GROWL	1. Low fluid level. 2. Pressure hose in contact with other components. 3. Internal pump noise.	1. Fill to proper level. 2. Reposition hose. 3. Replace pump.
SUCKING AIR SOUND	1. Loose return line clamp. 2. O-ring missing or damaged on hose fitting. 3. Low fluid level. 4. Air leak between pump and reservoir. 5. Reservoir cap not installed correctly.	1. Replace clamp. 2. Replace o-ring. 3. Fill to proper level. 4. Repair as necessary. 5. Install reservoir cap correctly.
SCRUBBING OR KNOCKING	1. Wrong tire size. 2. Wrong gear. 3. Tire Pressure	1. Verify tire size. 2. Verify gear. 3. Adjust Tire Pressure

STEERING (Continued)

BINDING AND STICKING

CONDITION	POSSIBLE CAUSE	CORRECTION
DIFFICULT TO TURN WHEEL STICKS OR BINDS	1. Low fluid level.	1. Fill to proper level.
	2. Tire pressure.	2. Adjust tire pressure.
	3. Steering components (ball joints/ tie rod ends).	3 Inspect and repair as necessary.
	4. Loose belt.	4. Adjust or replace.
	5. Low pump pressure.	5. Pressure test and replace if necessary.
	6. Column Intermediate shaft binding.	6. Replace Intermediate Shaft.
	7. Steering gear worn.	7. Replace gear.

INSUFFICIENT ASST. OR POOR RETURN TO CENTER

CONDITION	POSSIBLE CAUSE	CORRECTION
HARD TURNING OR MOMENTARY INCREASE IN TURNING EFFORT	1. Tire pressure.	1. Adjust tire pressure.
	2. Low fluid level.	2. Fill to proper level.
	3. Loose belt.	3. Adjust or replace.
	4. Low pump pressure.	4. Pressure test and repair as necessary.
	5. Internal gear leak.	5. Replace gear.
STEERING WHEEL DOES NOT WANT TO RETURN TO CENTER POSITION	1. Tire pressure.	1. Adjust tire pressure.
	2. Wheel alignment.	2. Align front end.
	3. Lack of lubrication.	3. Inspect and lubricate suspension compnents.
	4. High friction in steering gear.	4. Replace gear.

LOOSE STEERING AND VEHICLE LEAD

CONDITION	POSSIBLE CAUSE	CORRECTION
EXCESSIVE PLAY IN STEERING WHEEL	1. Worn or loose suspension or steering components.	1. Inspect and repair as necessary.
	2. Worn or loose wheel bearings.	2. Inspect and replace bearings.
	3. Steering gear mounting.	3. Tighten / replace gear mounting bolts/ isolators to specification.
	4. Gear out of adjustment.	4. Replace gear.
	5. Worn or loose steering intermediate shaft.	5. Inspect and replace as necessary.
VEHICLE PULLS, DRIFTS OR LEADS TO ONE SIDE.	1. Tire Pressure.	1. Adjust tire pressure.
	2. Radial tire lead.	2. Rotate tires.
	3. Brakes dragging.	3. Repair as necessary.
	4. Wheel alignment.	4. Align front end.

STEERING (Continued)

DIAGNOSIS AND TESTING - POWER STEERING FLOW AND PRESSURE

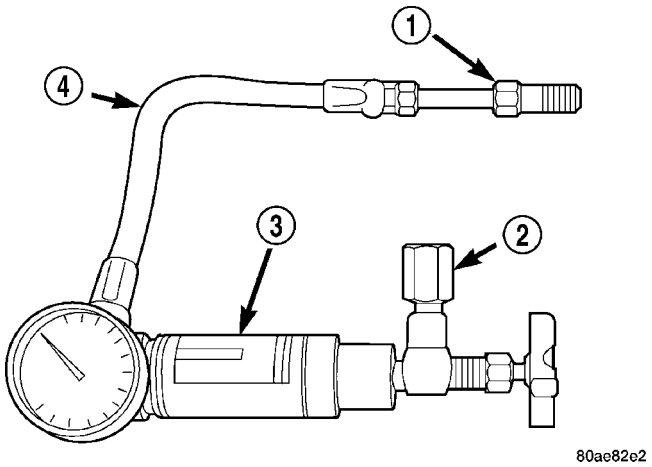

Fig. 1 Analyzer With Tube and Adapter

1 - TUBE
2 - ADAPTER FITTINGS
3 - ANALYZER
4 - GAUGE HOSE

The following procedure is used to test the operation of the power steering system on the vehicle. This test will provide the gallons per minute (GPM) or flow rate of the power steering pump along with the maximum relief pressure. Perform test any time a power steering system problem is present. This test will determine if the power steering pump or power steering gear is not functioning properly. The following pressure and flow test is performed using Power Steering Analyzer Tool kit 6815 and (Fig. 1) Adapter Kit 6893.

FLOW AND PRESSURE TEST

(1) Check the power steering belt to ensure it is in good condition and adjusted properly.

(2) Connect pressure gauge hose from the Power Steering Analyzer to Tube 6844.

(3) Connect Adapter 6826 to Power Steering Analyzer test valve end.

(4) Disconnect the high pressure hose from the power steering pump.

(5) Connect the tube to the pump hose fitting.

(6) Connect the power steering hose from the steering gear to the adapter.

(7) Open the test valve completely.

(8) Start engine and let idle long enough to circulate power steering fluid through flow/pressure test gauge and to get air out of the fluid. Then shut off engine.

(9) Check fluid level, add fluid as necessary. Start engine again and let idle.

(10) Check for air bubbles, Evacuate if necessary

(11) Gauge should read below 862 kPa (125 psi), if above, inspect the hoses for restrictions and repair as necessary. The initial pressure reading should be in the range of 345-552 kPa (50-80 psi).

(12) Increase the engine speed to 1500 RPM and read the flow meter. If the flow rate (GPM) is below specification, (refer to pump specification chart for GPM) the pump should be replaced.

CAUTION: The following test procedure involves testing maximum pump pressure output and flow control valve operation. Do not leave valve closed for more than three seconds as the pump could be damaged.

(13) Close valve fully three times and record highest pressure indicated each time. **All three readings must be above specifications and within 345 kPa (50 psi) of each other.**

- Pressures above specifications but not within 345 kPa (50 psi) of each other, replace pump.
- Pressures within 345 kPa (50 psi) of each other but below specifications, replace pump.

(14) Open the test valve and turn the steering wheel to the extreme left and right positions three times against the stops. Record the highest pressure reading at each position. Compare readings to the pump specifications chart. If pressures readings are not within 50 psi of each other, the gear is leaking internally and must be replaced.

CAUTION: Do not force the pump to operate against the stops for more than 2 to 3 seconds at a time because, pump damage will result.

PUMP SPECIFICATION

ENGINE	RELIEF PRESSURE	FLOW RATE (GPM) AT 1500 RPM
2.4L, 2.8L & 3.7L	10342 kPa, PREFERRED (1450 psi) with a MAX 1550 psi &, MIN 1400 psi	2.4 - 2.8

COLUMN

TABLE OF CONTENTS

page

COLUMN
DESCRIPTION 5
OPERATION - SERVICE PRECAUTIONS 5
REMOVAL 6
INSTALLATION 7
SPECIFICATIONS
TORQUE CHART 9
SPECIAL TOOLS
STEERING COLUMN 9
IGNITION SWITCH
DESCRIPTION 9
DIAGNOSIS AND TESTING - IGNITION SWITCH 9
REMOVAL - IGNITION SWITCH 10
INSTALLATION
IGNITION SWITCH INSTALLATION 10
KEY-IN IGNITION SWITCH
DESCRIPTION 11
DIAGNOSIS AND TESTING - KEY-IN IGNITION SWITCH 11
KEY CYLINDER
REMOVAL 11
INSTALLATION 12
INTERMEDIATE SHAFT
REMOVAL 12
INSTALLATION 13
STEERING WHEEL
REMOVAL 14
INSTALLATION 14

COLUMN

DESCRIPTION

NOTE: The steering column on vehicles with an automatic transmission may not be equipped with an internal locking shaft that allows the ignition key cylinder to be locked with the key. Alternative methods of locking the steering wheel for service will have to be used.

The standard non-tilt and tilt steering column has been designed to be serviced as an assembly. The column is connected to the steering gear with a one piece shaft. The upper half has a support bearing mounted to a bracket. The bracket mounts to the frame rail with two nuts. The shaft is serviceable. The key cylinder, switches, clock spring, trim shrouds and steering wheel are serviced separately.

OPERATION - SERVICE PRECAUTIONS

Safety goggles should be worn at all times when working on steering columns.

To service the steering wheel, switches or airbag, refer to Electrical - Restraints and follow all WARNINGS and CAUTIONS.

WARNING: THE AIRBAG SYSTEM IS A SENSITIVE, COMPLEX ELECTRO-MECHANICAL UNIT. BEFORE ATTEMPTING TO DIAGNOSE, REMOVE OR INSTALL THE AIRBAG SYSTEM COMPONENTS YOU MUST FIRST DISCONNECT AND ISOLATE THE BATTERY NEGATIVE (GROUND) CABLE. THEN WAIT TWO MINUTES FOR THE SYSTEM CAPACITOR TO DISCHARGE. FAILURE TO DO SO COULD RESULT IN ACCIDENTAL DEPLOYMENT OF THE AIRBAG AND POSSIBLE PERSONAL INJURY. THE FASTENERS, SCREWS, AND BOLTS, ORIGINALLY USED FOR THE AIRBAG COMPONENTS, HAVE SPECIAL COATINGS AND ARE SPECIFICALLY DESIGNED FOR THE AIRBAG SYSTEM. THEY MUST NEVER BE REPLACED WITH ANY SUBSTITUTES. ANYTIME A NEW FASTENER IS NEEDED, REPLACE WITH THE CORRECT FASTENERS PROVIDED IN THE SERVICE PACKAGE OR FASTENERS LISTED IN THE PARTS BOOKS.

COLUMN (Continued)

REMOVAL

(1) Position front wheels **straight ahead.**

(2) Remove and isolate the negative ground cable from the battery.

(3) Remove the airbag, (Refer to 8 - ELECTRICAL/RESTRAINTS/DRIVER AIRBAG - REMOVAL).

NOTE: If equipped with cruise control, disconnect clock spring harness from the cruise switch harness on the steering wheel.

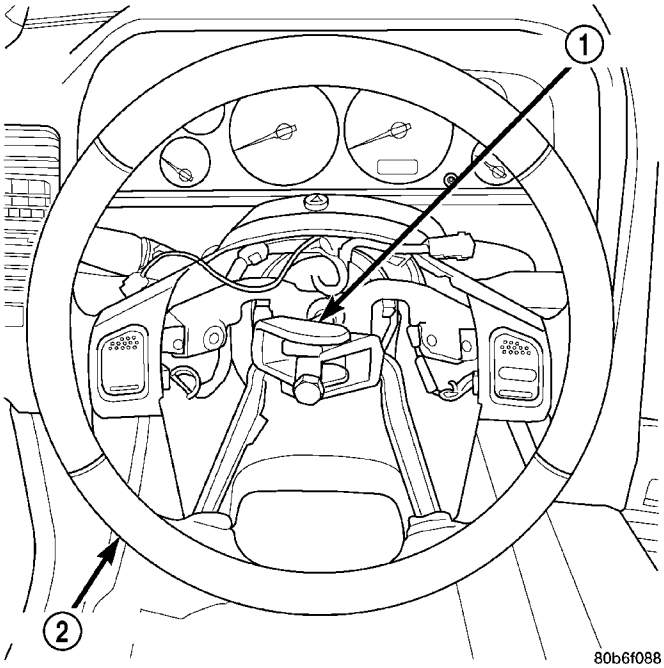

Fig. 1 Steering Wheel Puller

1 - PULLER C-3894-A
2 - STEERING WHEEL

(4) Remove the steering wheel (2) with puller C-3894–A (1) or an appropriate puller (Fig. 1) (Refer to 19 - STEERING/COLUMN/STEERING WHEEL - REMOVAL).

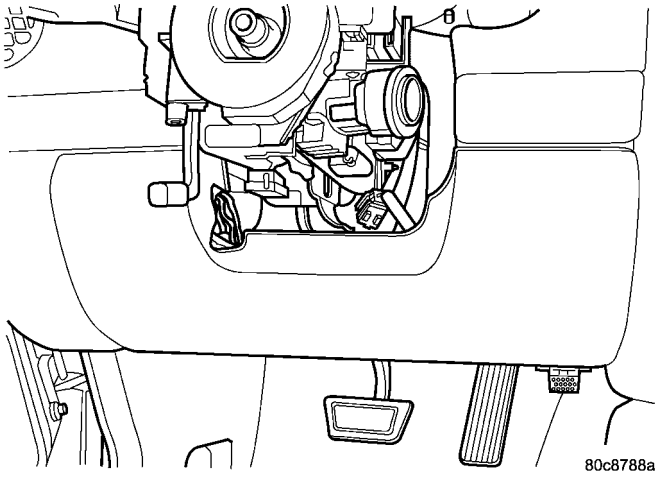

Fig. 2 KNEE BLOCKER

(5) Remove knee blocker cover and knee blocker, (Refer to 23 - BODY/INSTRUMENT PANEL/KNEE BLOCKER - REMOVAL). (Fig. 2).

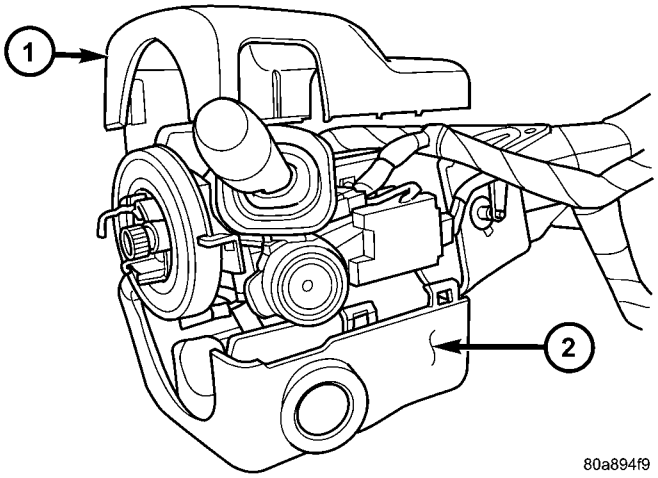

Fig. 3 SHROUD REMOVAL/INSTALL

1 - Upper Shroud
2 - Lower Shroud

(6) Remove screws from the lower column shroud (2) (Fig. 3) and remove both the upper and lower shrouds.

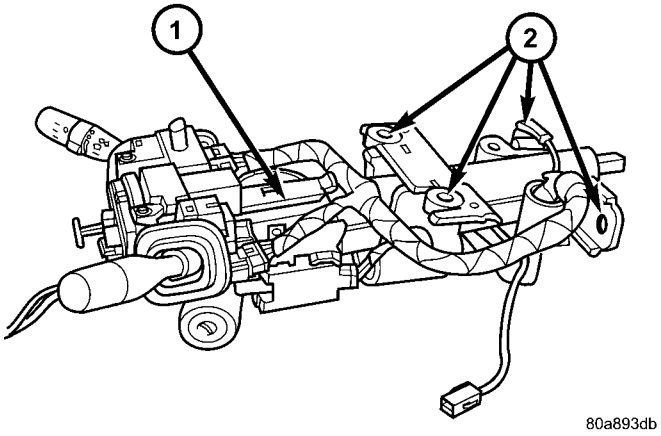

Fig. 4 STEERING COLUMN MOUNTING

1 - Steering Column
2 - Mounting Holes

(7) Turn ignition key to the on position.

(8) If vehicle is equipped with automatic transmission, disconnect shifter interlock cable from the column.

(9) Remove the steering coupler bolt and column mounting nuts and bolts (2) (Fig. 4) then lower column (1) off the mounting studs.

COLUMN (Continued)

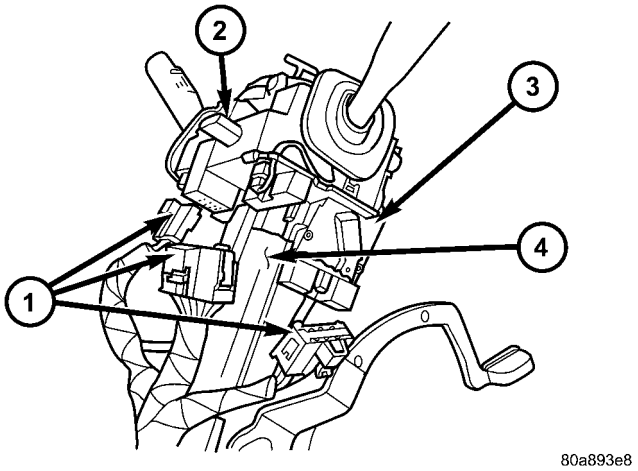

Fig. 5 WIRING HARNESS COLUMN

1 - Column Wiring Harness
2 - Multi-function Switch
3 - Ignition Switch
4 - Steering Column

(10) Disconnect and remove the wiring harness(1) from the column (Fig. 5).

(11) Slide the shifter interlock cable from the tie straps.

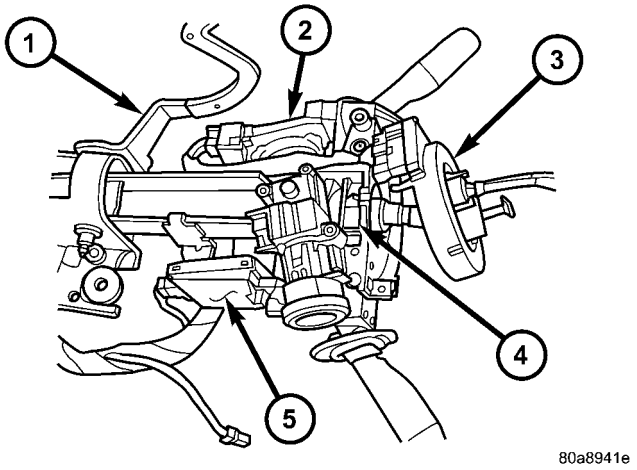

Fig. 6 CLOCK SPRING

1 - Tilt Lever
2 - Ignition Switch
3 - Clockspring
4 - Steering Column
5 - skim/skreem

(12) Remove column (4).

(13) Transfer the necessary parts if needed.

(14) Remove clock spring (3) (Fig. 6), switches, (SKREEM if equipped) (5) (Refer to 8 - ELECTRICAL/RESTRAINTS/CLOCKSPRING - REMOVAL).

INSTALLATION

(1) Align and install column (1) into the steering coupler (Fig. 7).

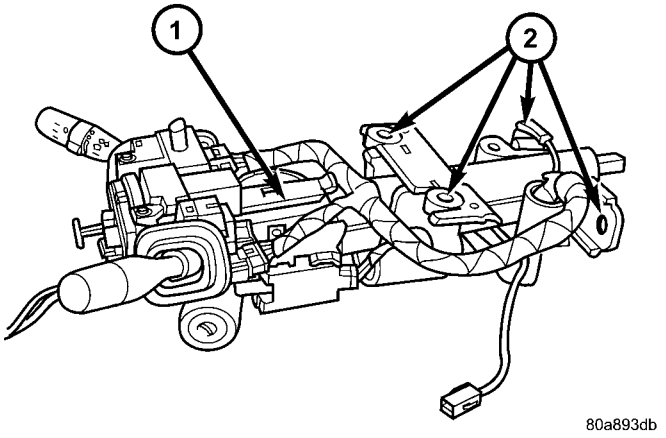

Fig. 7 STEERING COLUMN MOUNTING

1 - Steering Column
2 - Mounting Holes

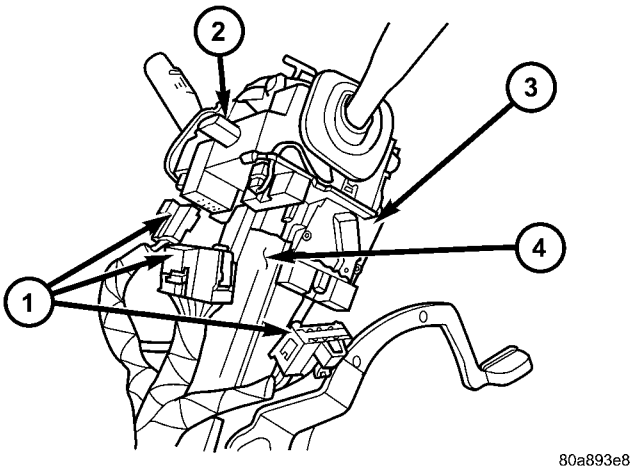

Fig. 8 WIRING HARNESS COLUMN

1 - Column Wiring Harness
2 - Multi-function Switch
3 - Ignition Switch
4 - Steering Column

(2) Install column harness (1) and connect harness to switches (Fig. 8).

(3) Reroute the shifter interlock cable through the tie straps.

(4) Install the column (1) onto the mounting studs (2) (Fig. 7).

(5) Install the two mounting nuts and the two mounting bolts all finger tight.

CAUTION: Lower nuts must be installed and tightened first then the upper nuts in order to prevent damage to the capsules.

(6) Tighten the lower mounting nuts to 17 N·m (150 in. lbs.).

COLUMN (Continued)

(7) Tighten the upper mounting nuts to 17 N·m (150 in. lbs.).

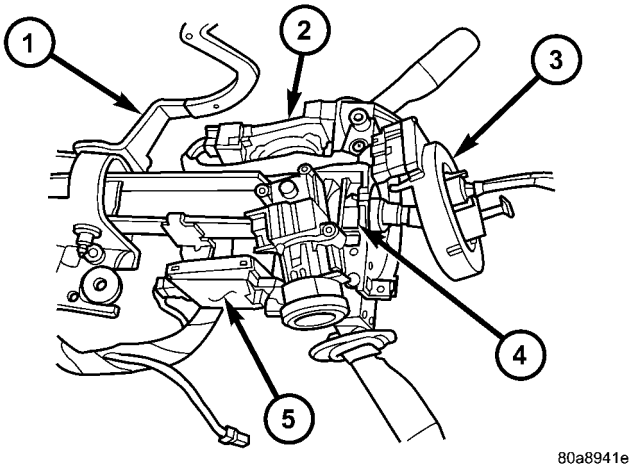

Fig. 9 CLOCK SPRING

1 - Tilt Lever
2 - Ignition Switch
3 - Clockspring
4 - Steering Column
5 - skim/skreem

(8) Install the steering column coupler bolt and tighten to 49 N·m (36 ft. lbs.).

(9) Reconnect the shifter interlock cable.

(10) Center the clock spring (3) (if necessary) and install it on the column (4) (Fig. 9), (Refer to 8 - ELECTRICAL/RESTRAINTS/CLOCKSPRING - INSTALLATION).

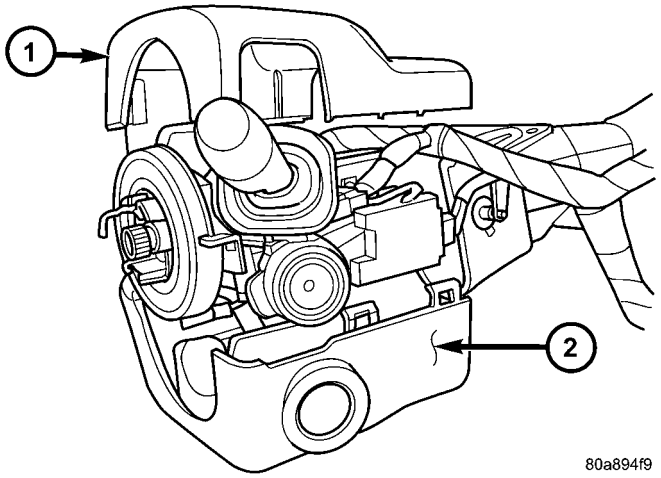

Fig. 10 SHROUD REMOVAL/INSTALL

1 - Upper Shroud
2 - Lower Shroud

(11) Snap together the column shrouds (1&2) and install the mounting screws (Fig. 10).

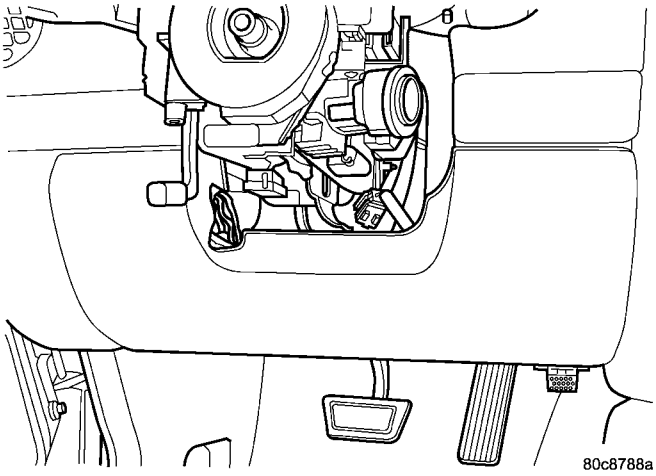

Fig. 11 KNEE BLOCKER

(12) Install the knee blocker and the knee blocker cover (Fig. 11), (Refer to 23 - BODY/INSTRUMENT PANEL/KNEE BLOCKER - INSTALLATION).

NOTE: Do not reuse the old steering wheel bolt (a new bolt must be used)

NOTE: Be certain that the steering wheel mounting bolt is tightened to the proper torque specification to ensure proper clockspring operation.

(13) Install the steering wheel and tighten bolt to 54 N·m (40 ft. lbs.) (Refer to 19 - STEERING/COLUMN/STEERING WHEEL - INSTALLATION).

NOTE: If equipped with cruise control, connect clock spring harness to cruise switch harness on the steering wheel.

(14) Install the airbag, (Refer to 8 - ELECTRICAL/RESTRAINTS/DRIVER AIRBAG - INSTALLATION).

(15) Install the negative battery terminal.

COLUMN (Continued)

SPECIFICATIONS

TORQUE CHART

TORQUE SPECIFICATIONS

DESCRIPTION	N·m	Ft. Lbs.	In. Lbs.
Tilt Steering Column Steering Wheel Bolt	54	40	—
Tilt Steering Column Mounting Bolts	17	—	150
Tilt Steering Column Coupler Bolt	49	36	—
Non-Tilt Steering Column Steering Wheel Bolt	54	40	—
Non-Tilt Steering Column Mounting Bolts	17	—	150
Non-Tilt Steering Column Coupler Bolt	49	36	—
Intermediate Shaft Lower Support Bearing Nuts	14	—	125
Ignition Switch Screws	2	—	17

SPECIAL TOOLS

STEERING COLUMN

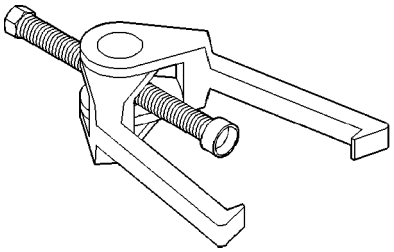

Puller C-3894-A

IGNITION SWITCH

DESCRIPTION

The electrical ignition switch is located on the steering column. It is used as the main on/off switching device for most electrical components. The mechanical key cylinder is used to engage/disengage the electrical ignition switch.

DIAGNOSIS AND TESTING - IGNITION SWITCH

ELECTRICAL DIAGNOSIS

For ignition switch electrical schematics, Refer to the appropriate section for the component.

MECHANICAL DIAGNOSIS (KEY DIFFICULT TO ROTATE)

Vehicles equipped with an automatic transmission and a floor mounted shifter: a cable is used to connect the interlock device in the steering column assembly, to the transmission floor shift lever. This interlock system is used to lock the transmission shifter in the PARK position when the key cylinder is rotated to any position. If the ignition key is difficult to rotate to or from any position, it may not be the fault of the key cylinder or the steering column components. The brake transmission shift interlock cable may be out of adjustment. (Refer to 21 - TRANSMISSION/TRANSAXLE/AUTOMATIC - 30RH/GEAR SHIFT CABLE - ADJUSTMENTS). The interlock system within the steering column is not serviceable. If repair is necessary, the steering column assembly must be replaced. (Refer to 19 - STEERING/COLUMN - REMOVAL).

Vehicles equipped with a manual transmission and a floor mounted shifter: on certain models, a button is located on the steering column behind the ignition key cylinder. The button must be manually depressed to allow rotation of the ignition key cylinder to any position. If it is difficult to rotate the key to any position, the lever mechanism may be defective. This mechanism is not serviceable. If repair is necessary, the steering column assembly must be replaced. (Refer to 19 - STEERING/COLUMN - REMOVAL).

IGNITION SWITCH (Continued)

REMOVAL - IGNITION SWITCH

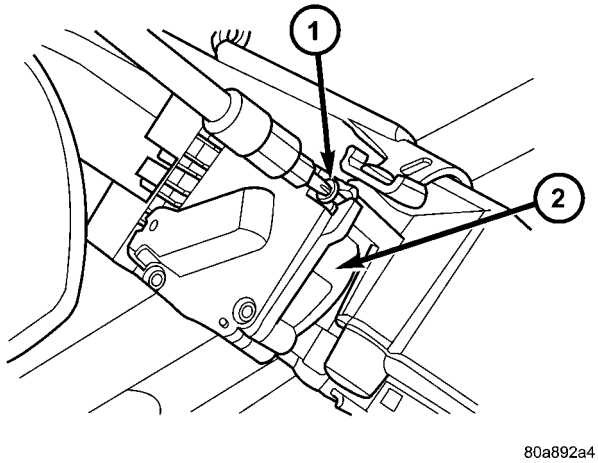

Fig. 12 IGNITION SWITCH MOUNTING SCREW

1 - Tamper Proof Torx Screw
2 - Ignition Switch

The ignition key must be in the key cylinder for cylinder removal. The key cylinder must be removed first before removing ignition switch.

(1) Remove lower steering column cover screws and remove cover.

(2) Remove lock cylinder. (Refer to 19 - STEERING/COLUMN/KEY/LOCK CYLINDER - REMOVAL).

(3) Remove the multi-function switch.

(4) Disconnect the electrical connector at the rear of the ignition switch.

(5) Remove the ignition switch mounting screw (1) (Fig. 12). Use tamper proof torx bit to remove the screw (1).

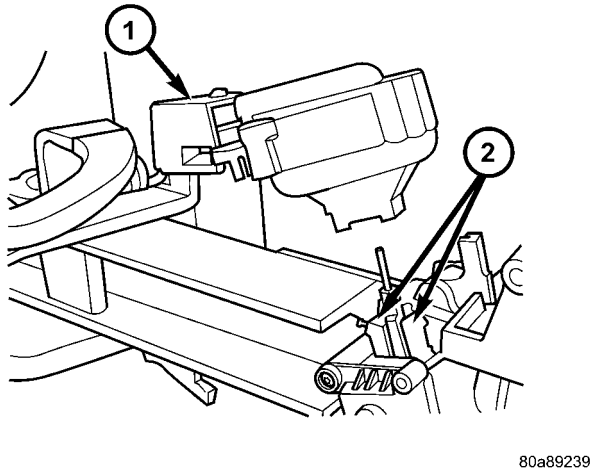

Fig. 13 IGNITION SWITCH TABS

1 - Ignition Switch
2 - Locking Tabs

(6) Pull the ignition switch (1) straight out to remove from the locking tabs (2) (Fig. 13).

INSTALLATION

IGNITION SWITCH INSTALLATION

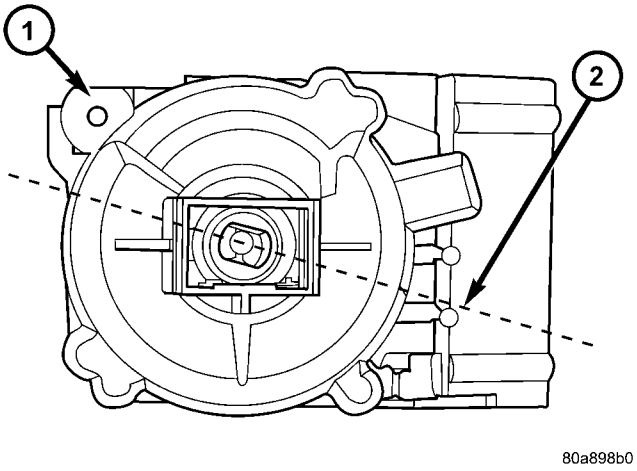

Fig. 14 IGNITION SWITCH ON POSITION

1 - Ignition Switch
2 - Rotate to On Position

The ignition key must be in the key cylinder for cylinder installation. The key cylinder must be aligned with the ignition switch for installation.

(1) Before installing ignition switch (1), rotate the slot in the switch to the ON position (2) (Fig. 14).

(2) Connect the electrical connector to rear of ignition switch (1). Make sure that locking tab is fully seated into wiring connector.

(3) Position the switch to the column and install tamper proof screw. Tighten screw to 2 N·m (17 in. lbs.).

(4) Install the lock cylinder (Refer to 19 - STEERING/COLUMN/KEY/LOCK CYLINDER - INSTALLATION).

(5) Test the operation of the lock cylinder for smooth rotating.

(6) Install the multi-function switch.

(7) Install steering column lower cover.

KEY-IN IGNITION SWITCH

DESCRIPTION

The key-in ignition switch is integral to the ignition switch, which is mounted on the left side of the steering column, opposite the ignition cylinder. It closes a path to ground for the instrument cluster chime warning circuitry when the ignition key is inserted in the ignition lock cylinder and the driver door jamb switch is closed (driver door is open). The key-in ignition switch opens the ground path when the key is removed from the ignition cylinder.

The key-in ignition switch cannot be repaired and, if faulty or damaged, the entire ignition switch must be replaced. (Refer to 19 - STEERING/COLUMN/IGNITION SWITCH - REMOVAL).

DIAGNOSIS AND TESTING - KEY-IN IGNITION SWITCH

For circuit descriptions and diagrams, Refer to the appropriate sections on the individual components.

WARNING: ON VEHICLES EQUIPPED WITH AIRBAGS, REFER TO ELECTRICAL - PASSIVE RESTRAINT SYSTEMS BEFORE ATTEMPTING ANY STEERING WHEEL, STEERING COLUMN, OR INSTRUMENT PANEL COMPONENT DIAGNOSIS OR SERVICE. FAILURE TO TAKE THE PROPER PRECAUTIONS COULD RESULT IN ACCIDENTAL AIRBAG DEPLOYMENT AND POSSIBLE PERSONAL INJURY.

(1) Disconnect and isolate the battery negative cable. Remove the steering column shrouds. Unplug the key-in ignition switch wire harness connector from the ignition switch.

(2) Check for continuity between the key-in switch sense circuit and the left front door jamb switch sense circuit terminals of the key-in ignition switch. There should be continuity with the key in the ignition cylinder, and no continuity with the key removed from the ignition cylinder. If OK, go to Step 3. If not OK, replace the faulty ignition switch assembly.

(3) Check for continuity between the left front door jamb switch sense circuit cavity of the key-in ignition switch wire harness connector and a good ground. There should be continuity with the driver door open, and no continuity with the driver door closed. If OK, see the diagnosis for Instrument Cluster in this group. If not OK, repair the circuit to the driver door jamb switch as required.

KEY CYLINDER

REMOVAL

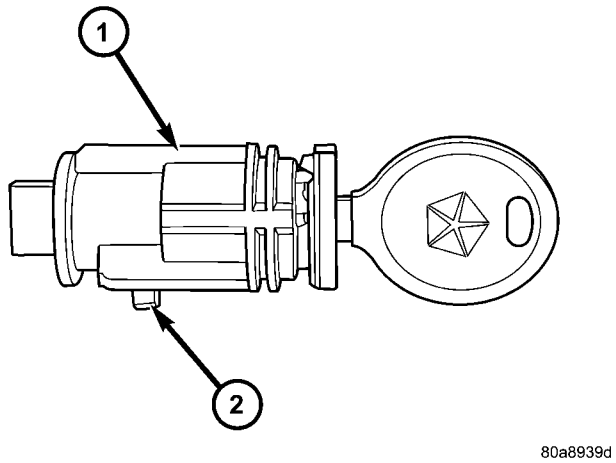

Fig. 15 KEY CYLINDER RELEASE TANG

1 - KEY CYLINDER
2 - RELEASE TANG

The ignition key must be in the key cylinder (1) for cylinder removal. The key cylinder must be removed first before removing ignition switch.

(1) If equipped with an automatic transmission, place shifter in PARK position.

(2) Remove the lower shroud cover.

(3) Remove the remote keyless entry (R.K.E.) module.

(4) Remove the halo ring around the cylinder.

(5) Rotate key to ON position.

(6) A release tang (2) is located on bottom of key cylinder (1) (Fig. 15).

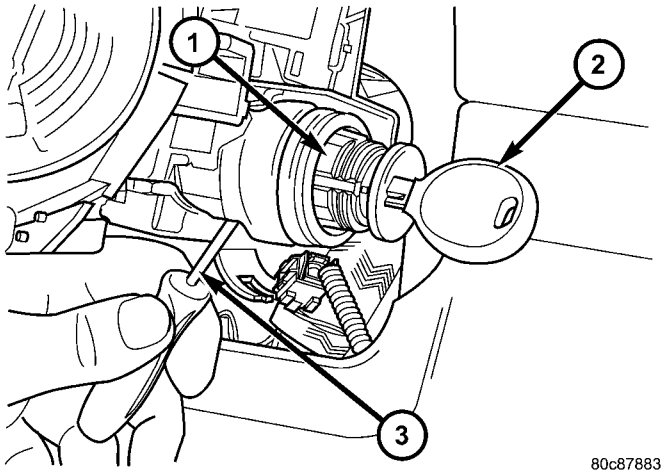

Fig. 16 KEY CYLINDER RELEASE

1 - KEY CYLINDER
2 - KEY
3 - PIN PUNCH

KEY CYLINDER (Continued)

(7) Position a small screwdriver or pin punch (3) into tang access hole on bottom of steering column (Fig. 16).

(8) Push the pin punch (3) up while pulling key cylinder (1) from steering column.

INSTALLATION

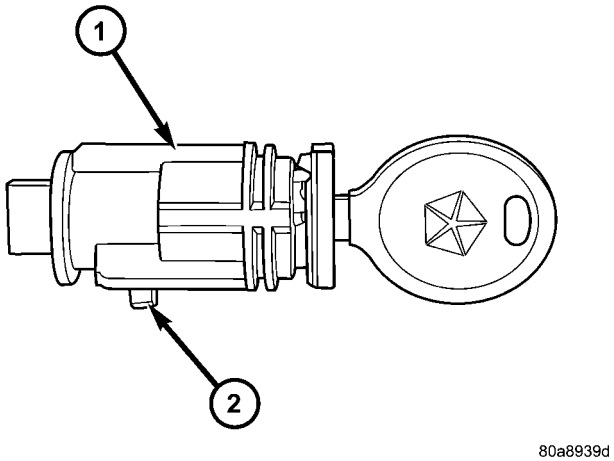

Fig. 17 KEY CYLINDER RELEASE TANG

1 - KEY CYLINDER
2 - RELEASE TANG

The ignition key must be in the key cylinder (1) for cylinder installation (Fig. 17).

(1) Install the key cylinder (1) into the housing using care to align the end of the key cylinder with the ignition switch (Fig. 17).

(2) Push the key cylinder (1) in until it clicks (Fig. 17).

(3) Rotate the key to the insert position.

(4) install the halo ring around the key cylinder housing.

(5) Install the R.K.E. module.

(6) Install the lower shroud cover.

INTERMEDIATE SHAFT

REMOVAL

(1) Disconnect the negative battery cable.

(2) Remove knee blocker cover and knee blocker, (Refer to 23 - BODY/INSTRUMENT PANEL/KNEE BLOCKER - REMOVAL).

NOTE: The steering column on vehicles with an automatic transmission may not be equipped with an internal locking shaft that allows the ignition key cylinder to be locked with the key. Alternative methods of locking the steering wheel for service will have to be used.

(3) Lock the steering wheel with the tires in the straight ahead position.

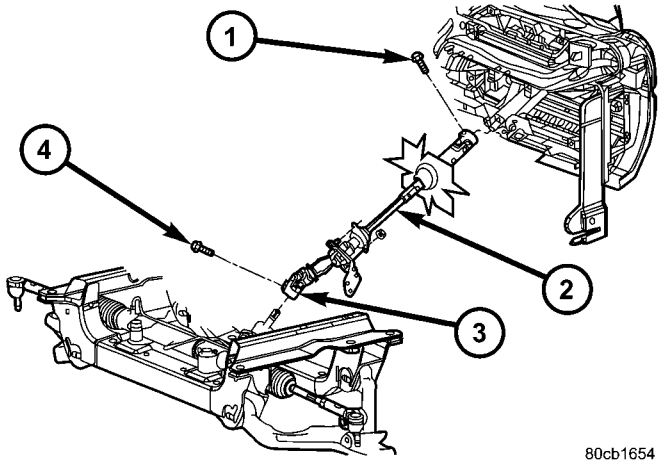

Fig. 18 STEERING COUPLER

1 - UPPER PINCH BOLT
2 - STEERING SHAFT
3 - STEERING COUPLER
4 - LOWER PINCH BOLT

(4) Remove the lower column pinch bolt (4) (Fig. 18).

(5) Lower the steering coupler (3) shaft from the column.

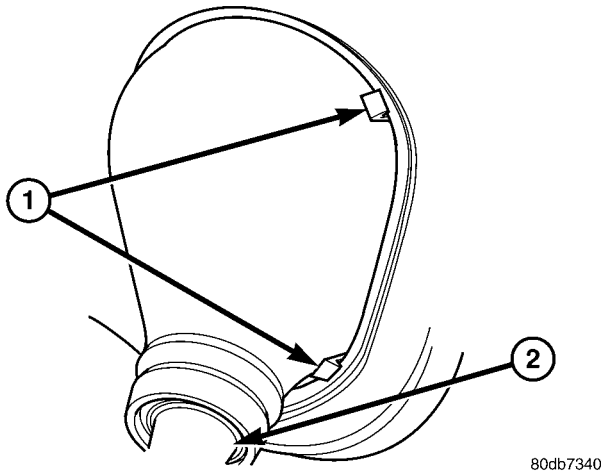

Fig. 19 RELEASE TANGS

1 - RELEASE TANGS (4)
2 - UPPER STEERING COUPLER SHAFT

(6) Remove the intermediate shaft seal by pushing in the four tangs (1) securing it to the panel (Fig. 19).

(7) Remove the center support bearing bracket from the mount on the shock tower.

INTERMEDIATE SHAFT (Continued)

(8) Remove the lower coupler pinch bolt (4) at the steering gear (Fig. 18).

(9) Remove the coupler (3) at the steering gear (Fig. 18).

(10) Remove the intermediate shaft (2) from the vehicle (Fig. 18).

(11) Remove the center support bracket from the steering shaft (if replacing the intermediate shaft).

INSTALLATION

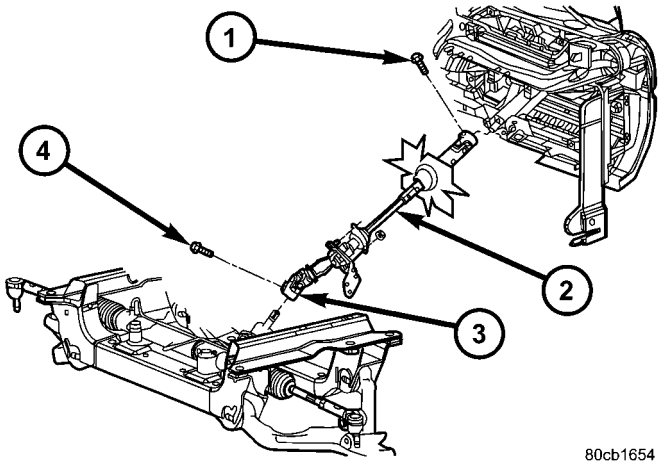

Fig. 20 STEERING COUPLER

1 - UPPER PINCH BOLT
2 - STEERING SHAFT
3 - STEERING COUPLER
4 - LOWER PINCH BOLT

(1) Install the center support bearing bracket to the steering shaft (if removed) Tighten to 14 N·m (125 in.lbs.).

(2) Install the intermediate shaft (2) to the vehicle (Fig. 20).

(3) Install the coupler (3) at the steering gear (Fig. 20).

(4) Install the lower coupler pinch bolt (4) at the steering gear and tighten the bolt to 49 N·m (36 ft. lbs.) (Fig. 20).

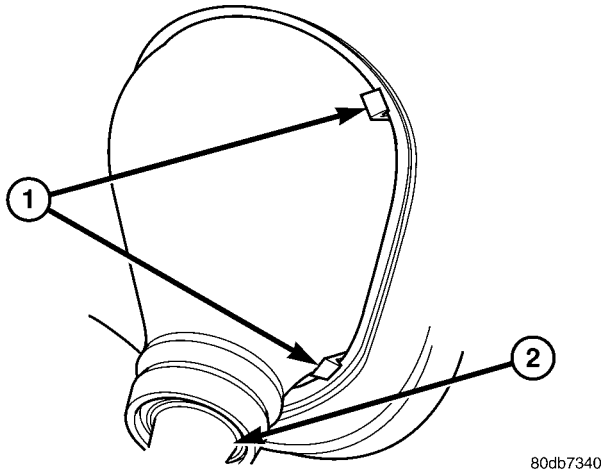

Fig. 21 RELEASE TANGS

1 - RELEASE TANGS (4)
2 - UPPER STEERING COUPLER SHAFT

(5) Install the center support bearing bracket to the mounting holes on the shock tower.

(6) Install the intermediate shaft seal by pushing it in securing the four tangs (1) to the panel (Fig. 21).

(7) Install the steering coupler shaft to the column.

(8) Install the upper pinch bolt (1) and tighten the bolt to 49 N·m (36 ft. lbs.) (Fig. 20).

(9) Unlock the steering wheel.

(10) Install the knee blocker cover and knee blocker (Refer to 23 - BODY/INSTRUMENT PANEL/ KNEE BLOCKER - INSTALLATION).

(11) Reconnect the negative battery cable.

STEERING WHEEL

REMOVAL

(1) Disable and remove the drivers side airbag. (Refer to 8 - ELECTRICAL/RESTRAINTS/DRIVER AIRBAG - REMOVAL).

(2) Partially remove the steering wheel bolt and leave the bolt in the column.

(3) Install puller C-3894–A or equivalent using the top of the bolt to push on. (Fig. 22)

NOTE: Ensure the puller jaws are seated in the pockets (Fig. 23) of the steering wheel armature.

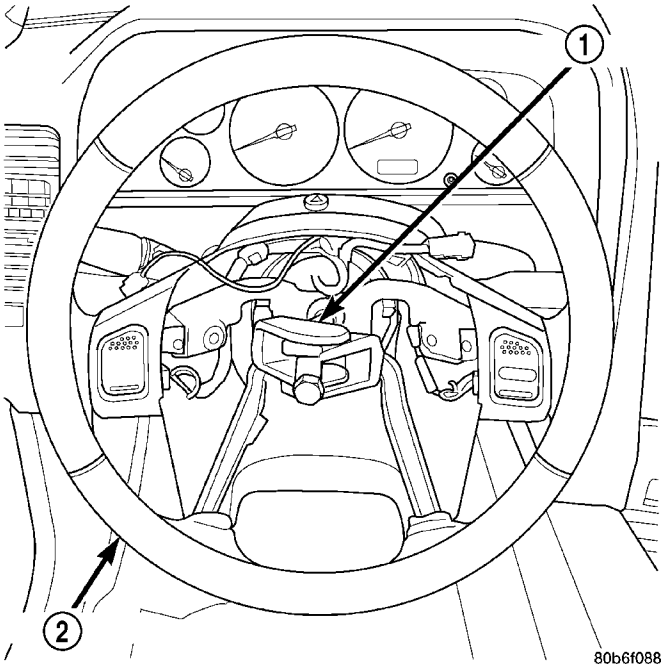

Fig. 22 STEERING WHEEL PULLER

1 - PULLER C-3894-A
2 - STEERING WHEEL

(4) Remove the steering wheel.

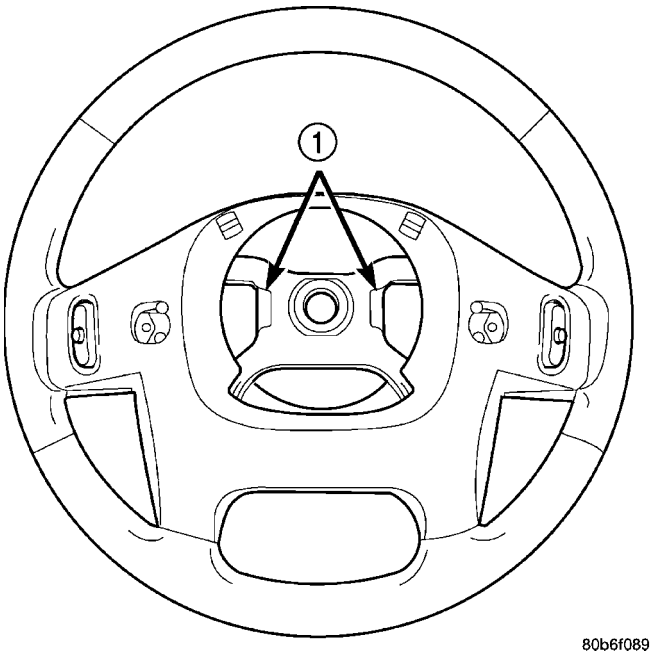

Fig. 23 Steering Wheel Pockets

1 - POCKETS

INSTALLATION

NOTE: Do not reuse the old steering wheel bolt (a new bolt must be used)

(1) Install steering wheel to the column

NOTE: Be certain that the steering wheel mounting bolt is tightened to the proper torque specification to ensure proper clockspring operation.

(2) Install the new steering wheel bolt. Tighten the bolt to 54 N·m (40 ft. lbs.).

(3) Install the drivers side air bag. (Refer to 8 - ELECTRICAL/RESTRAINTS/DRIVER AIRBAG - INSTALLATION).

GEAR

TABLE OF CONTENTS

	page
GEAR	
DESCRIPTION	15
OPERATION	15
REMOVAL	
4WD	15
2WD	16
DIESEL	17
REMOVAL - RHD - 4X2 & 4X4	18
INSTALLATION	
4WD	18
2WD	19
DIESEL	20
INSTALLATION - RHD - 4X2 & 4X4	21
SPECIFICATIONS	
TORQUE CHART	22
SPECIAL TOOLS	
OUTER TIE ROD END REMOVAL TOOL	22

GEAR

DESCRIPTION

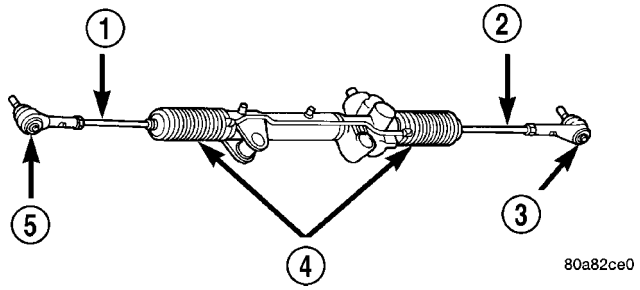

Fig. 1 Rack & Pinion Steering Gear

1 - TIE ROD - INNER
2 - TIE ROD - INNER
3 - TIE ROD END - OUTER LH
4 - BOOTS
5 - TIE ROD END - OUTER RH

A rack and pinion steering gear (Fig. 1) is made up of two main components, the pinon shaft and the rack. The gear cannot be adjusted or internally serviced. If a malfunction or a fluid leak occurs, the gear must be replaced as an assembly, With the exception of the outer tie rods (3&5) which are serviced separately.

OPERATION

The steering column intermediate shaft is attached to the gear pinion. The rotation of the pinion moves the gear rack from side-to-side. This lateral action of the rack pushes and pulls the tie rods, which are connected to the steering knuckles to change the direction of the front wheels.

REMOVAL

4WD

(1) Siphon the power steering fluid from the power steering reservoir.

NOTE: The steering column on vehicles with an automatic transmission may not be equipped with an internal locking shaft that allows the ignition key cylinder to be locked with the key. Alternative methods of locking the steering wheel for service will have to be used.

(2) Lock the steering wheel to prevent spinning of the clockspring.
(3) Raise and support the vehicle.
(4) Remove the skid plate from under the front end to gain access to the gear (Refer to 13 - FRAME & BUMPERS/FRAME/FRONT SKID PLATE - REMOVAL).
(5) Remove the front tire and wheel assemblies.

NOTE: Mark the alignment adjusting cams for easier installation.

(6) Remove the lower control arms. (Refer to 2 - SUSPENSION/FRONT/LOWER CONTROL ARM - REMOVAL).
(7) Remove the front axle. (Refer to 3 - DIFFERENTIAL & DRIVELINE/FRONT AXLE - REMOVAL).
(8) Remove the tie rod end nuts.
(9) Separate tie rod ends from the knuckles with Puller C-3894-A.

GEAR (Continued)

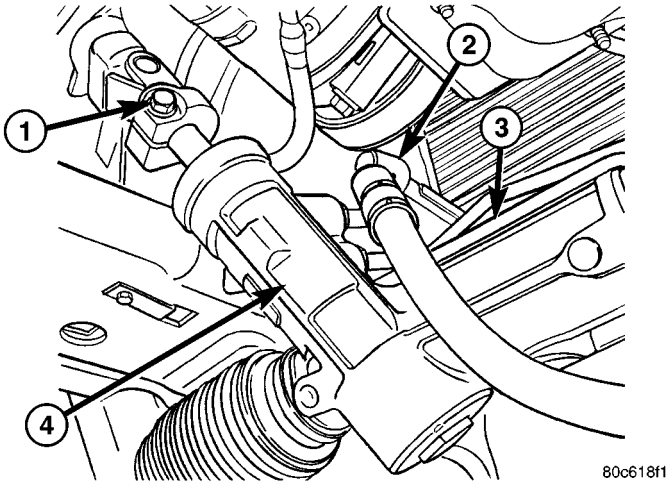

Fig. 2 COUPLER BOLT

1 - LOWER COUPLER & PINCH BOLT
2 - HIGH PRESSURE HOSE
3 - RETURN HOSE
4 - RACK & PINION

(10) Remove the intermediate shaft lower coupler pinch bolt (1) and slide the coupler off the gear (Fig. 2).

(11) Remove power steering pressure hose bracket (Fig. 3).

(12) Remove the power steering lines (2) from the gear (4) (Fig. 2).

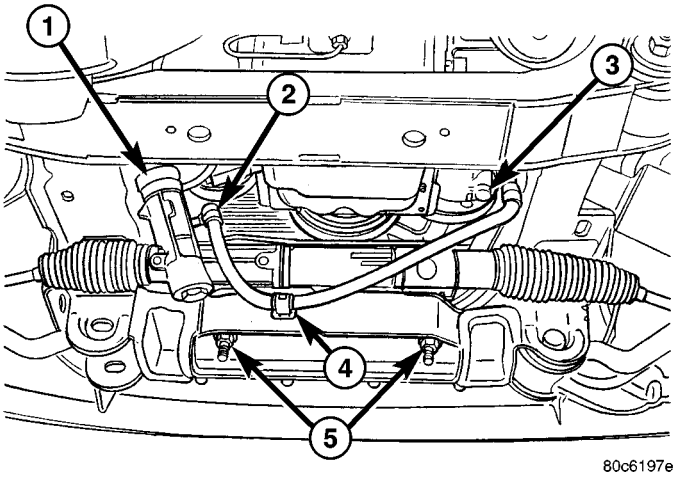

Fig. 3 RACK & PINION

1 - RACK & PINION
2 - HIGH PRESSURE HOSE
3 - POWER STEERING PUMP
4 - HIGH PRESSURE HOSE BRACKET
5 - RACK & PINION MOUNTING BOLTS

(13) Remove the mounting bolts (5) from the gear to the front cradle (Fig. 3).

(14) Remove the steering gear (1) from the vehicle.

2WD

(1) Siphon the power steering fluid from the power steering reservoir.

NOTE: The steering column on vehicles with an automatic transmission may not be equipped with an internal locking shaft that allows the ignition key cylinder to be locked with the key. Alternative methods of locking the steering wheel for service will have to be used.

(2) Lock the steering wheel to prevent spinning of the clockspring.

(3) Raise and support the vehicle.

(4) Remove the skid plate from under the front end to gain access to the gear (Refer to 13 - FRAME & BUMPERS/FRAME/FRONT SKID PLATE - REMOVAL).

(5) Remove the tire and wheel assembly.

NOTE: Mark the alignment adjusting cams and tie rod end jam nuts on the steering gear for easier installation.

(6) Remove the tie rod end nuts.

(7) Separate tie rod ends from the knuckles with Puller C-3894-A.

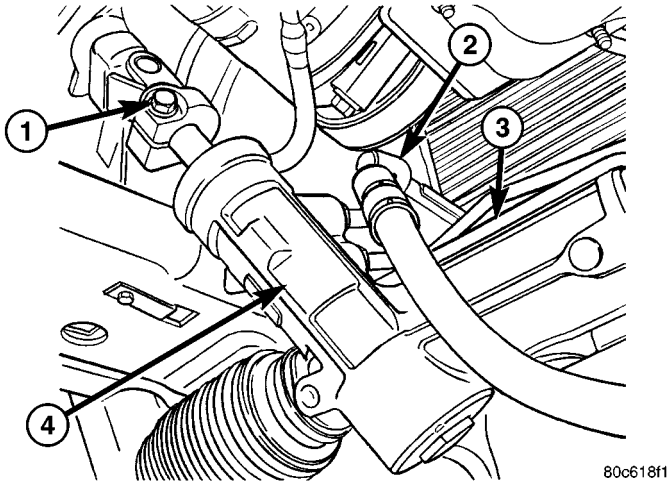

Fig. 4 COUPLER BOLT

1 - LOWER COUPLER & PINCH BOLT
2 - HIGH PRESSURE HOSE
3 - RETURN HOSE
4 - RACK & PINION

(8) Remove the lower intermediate shaft coupler pinch bolt (1) and slide the coupler off the gear (4) (Fig. 4).

(9) Remove power steering pressure hose bracket (4) (Fig. 5).

(10) Remove the power steering lines (2) from the gear (1) (Fig. 5).

GEAR (Continued)

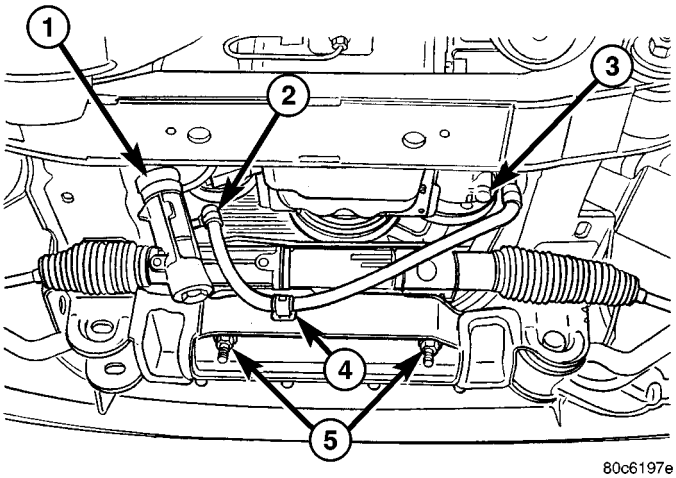

Fig. 5 RACK & PINION

1 - RACK & PINION
2 - HIGH PRESSURE HOSE
3 - POWER STEERING PUMP
4 - HIGH PRESSURE HOSE BRACKET
5 - RACK & PINION MOUNTING BOLTS

(11) Remove the mounting bolts (5) from the gear (1) to the front cradle (Fig. 5).

(12) Remove the steering gear (1) from the vehicle.

DIESEL

(1) Siphon the power steering fluid from the power steering reservoir.

NOTE: The steering column on vehicles with an automatic transmission may not be equipped with an internal locking shaft that allows the ignition key cylinder to be locked with the key. Alternative methods of locking the steering wheel for service will have to be used.

(2) Lock the steering wheel to prevent spinning of the clockspring.

(3) Raise and support the vehicle.

(4) Remove the skid plate from under the front end to gain access to the gear (Refer to 13 - FRAME & BUMPERS/FRAME/FRONT SKID PLATE - REMOVAL)

(5) Remove the tire and wheel assembly.

NOTE: Mark the alignment adjusting cams for easier installation.

(6) Remove the lower control arms. (Refer to 2 - SUSPENSION/FRONT/LOWER CONTROL ARM - REMOVAL).

(7) Remove the front axle. (Refer to 3 - DIFFERENTIAL & DRIVELINE/FRONT AXLE - REMOVAL).

(8) Remove the tie rod end nuts.

(9) Separate tie rod ends from the knuckles with Puller C-3894-A.

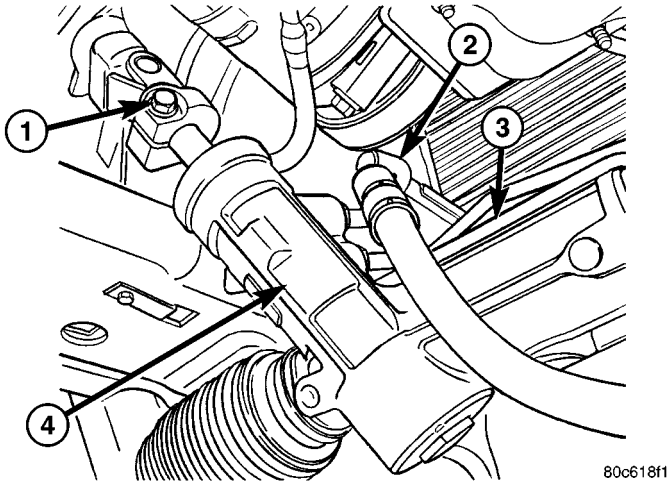

Fig. 6 COUPLER BOLT

1 - LOWER COUPLER & PINCH BOLT
2 - HIGH PRESSURE HOSE
3 - RETURN HOSE
4 - RACK & PINION

(10) Remove the lower coupler pinch bolt (1) and slide the coupler off the gear (4) (Fig. 6).

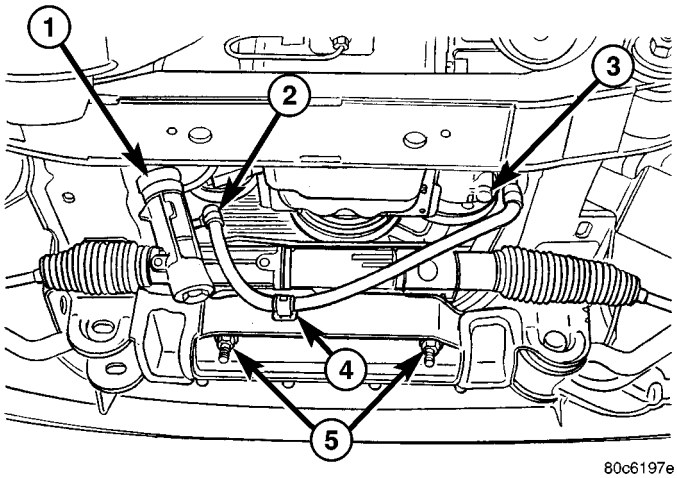

Fig. 7 RACK & PINION

1 - RACK & PINION
2 - HIGH PRESSURE HOSE
3 - POWER STEERING PUMP
4 - HIGH PRESSURE HOSE BRACKET
5 - RACK & PINION MOUNTING BOLTS

(11) Remove power steering pressure hose bracket (4) (Fig. 7).

(12) Remove the power steering lines (2) from the gear (1) (Fig. 6).

(13) Remove the mounting bolts (5) from the gear to the front cradle (Fig. 7).

(14) Remove the steering gear from the vehicle.

GEAR (Continued)

REMOVAL - RHD - 4X2 & 4X4

(1) Siphon the power steering fluid from the power steering reservoir.

NOTE: The steering column on vehicles with an automatic transmission may not be equipped with an internal locking shaft that allows the ignition key cylinder to be locked with the key. Alternative methods of locking the steering wheel for service will have to be used.

(2) Lock the steering wheel to prevent spinning of the clockspring.

(3) Raise and support the vehicle.

(4) Remove the skid plate from under the front end to gain access to the gear (Refer to 13 - FRAME & BUMPERS/FRAME/FRONT SKID PLATE - REMOVAL).

(5) Remove the tire and wheel assembly.

NOTE: Mark the alignment adjusting cams and tie rod end jam nuts on the steering gear for easier installation.

(6) Remove the tie rod end nuts.

(7) Separate tie rod ends from the knuckles with Puller C-3894-A.

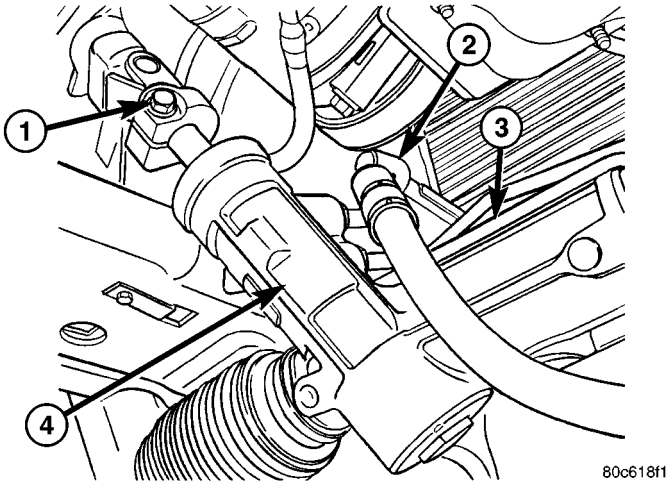

Fig. 8 COUPLER BOLT

1 - LOWER COUPLER & PINCH BOLT
2 - HIGH PRESSURE HOSE
3 - RETURN HOSE
4 - RACK & PINION

(8) Remove the lower intermediate shaft coupler pinch bolt (1) and slide the coupler off the gear (4) (Fig. 8).

(9) Remove power steering pressure hose bracket (4) (Fig. 9).

(10) Remove the power steering lines (2) from the gear (1) (Fig. 9).

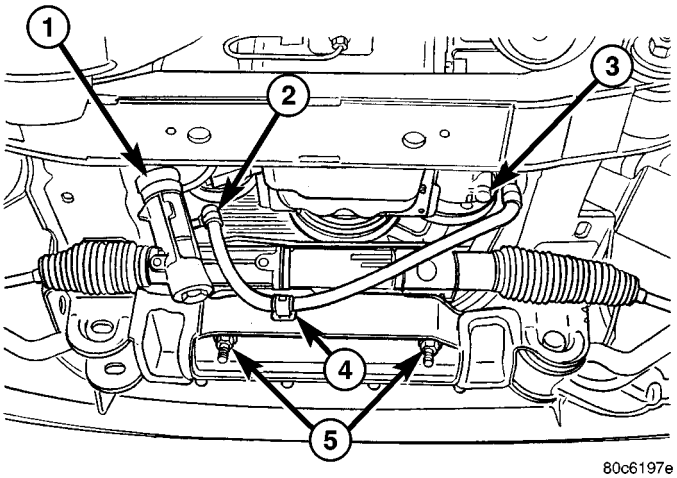

Fig. 9 RACK & PINION

1 - RACK & PINION
2 - HIGH PRESSURE HOSE
3 - POWER STEERING PUMP
4 - HIGH PRESSURE HOSE BRACKET
5 - RACK & PINION MOUNTING BOLTS

(11) Remove the mounting bolts (5) from the gear (1) to the front cradle (Fig. 9).

(12) Remove the steering gear (1) from the vehicle.

INSTALLATION

4WD

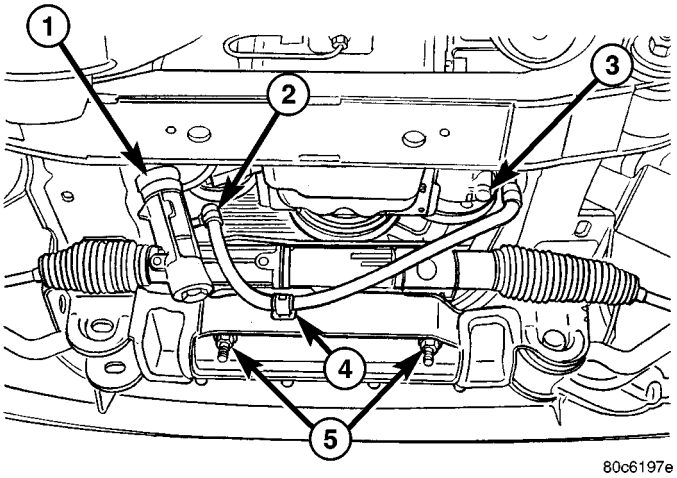

Fig. 10 RACK & PINION

1 - RACK & PINION
2 - HIGH PRESSURE HOSE
3 - POWER STEERING PUMP
4 - HIGH PRESSURE HOSE BRACKET
5 - RACK & PINION MOUNTING BOLTS

(1) Transfer the tie rod ends to the new steering gear (if needed).

(2) Install the steering gear (1) to the vehicle.

GEAR (Continued)

(3) Install the gear mounting bolts(5) to the front cradle. (Fig. 10). Tighten the gear mounting bolts to 162 N·m (120 ft.lbs.)

(4) Install the power steering lines (2) to the gear (Fig. 10).

(5) Install the power steering pressure hose bracket (4) (Fig. 10).

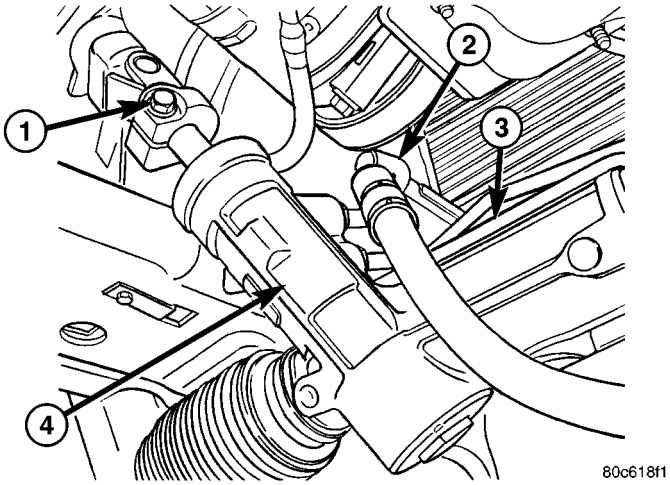

Fig. 11 COUPLER BOLT

1 - LOWER COUPLER & PINCH BOLT
2 - HIGH PRESSURE HOSE
3 - RETURN HOSE
4 - RACK & PINION

(6) Install the lower coupler bolt (1) and slide the coupler on to the gear (4) (Fig. 11).

(7) Install the tie rod end to the knuckle and tighten the nuts.

(8) Install the front axle. (Refer to 3 - DIFFERENTIAL & DRIVELINE/FRONT AXLE - INSTALLATION).

(9) Install the lower control arms. (Refer to 2 - SUSPENSION/FRONT/LOWER CONTROL ARM - INSTALLATION).

(10) Install the tire and wheel assembly. (Refer to 22 - TIRES/WHEELS/WHEELS - STANDARD PROCEDURE).

(11) Install the skid plate (Refer to 13 - FRAME & BUMPERS/FRAME/FRONT SKID PLATE - INSTALLATION).

(12) Lower the vehicle.

(13) Unlock the steering wheel.

(14) Fill the power steering fluid (Refer to 19 - STEERING/PUMP - STANDARD PROCEDURE).

(15) Reset the toe and center the steering wheel (Refer to 2 - SUSPENSION/WHEEL ALIGNMENT - STANDARD PROCEDURE).

2WD

(1) Transfer the outer tie rod ends to the new steering gear (if needed).

(2) Install the steering gear to the vehicle.

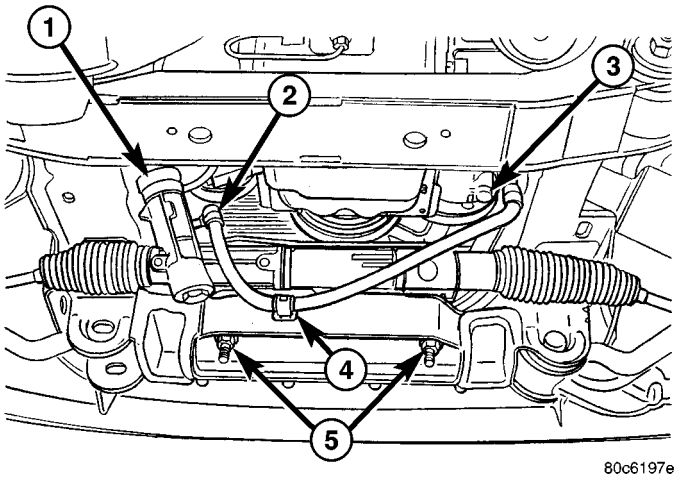

Fig. 12 RACK & PINION

1 - RACK & PINION
2 - HIGH PRESSURE HOSE
3 - POWER STEERING PUMP
4 - HIGH PRESSURE HOSE BRACKET
5 - RACK & PINION MOUNTING BOLTS

(3) Install the gear mounting bolts (5) to the front cradle. (Fig. 12). Tighten the gear mounting bolts to 162 N·m (120 ft.lbs.)

(4) Install the power steering lines (2) to the gear (1) (Fig. 12).

(5) Install the power steering pressure hose bracket (4) (Fig. 12).

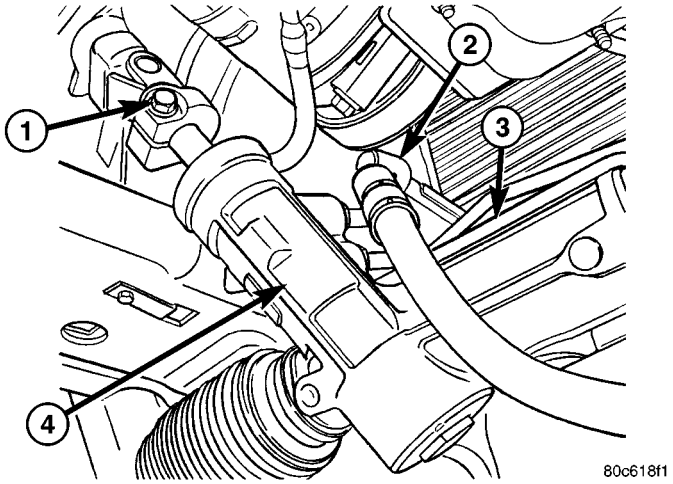

Fig. 13 COUPLER BOLT

1 - LOWER COUPLER & PINCH BOLT
2 - HIGH PRESSURE HOSE
3 - RETURN HOSE
4 - RACK & PINION

(6) Install the lower coupler pinch bolt (1) and slide the coupler on to the gear (4) (Fig. 13).

(7) Install the tie rod end to the knuckle and tighten the nuts.

GEAR (Continued)

(8) Install the tire and wheel assembly. (Refer to 22 - TIRES/WHEELS/WHEELS - STANDARD PROCEDURE).

(9) Install the skid plate (Refer to 13 - FRAME & BUMPERS/FRAME/FRONT SKID PLATE - INSTALLATION).

(10) Lower the vehicle.

(11) Unlock the steering wheel.

(12) Fill the power steering fluid (Refer to 19 - STEERING/PUMP - STANDARD PROCEDURE).

(13) Reset the toe and center the steering wheel (Refer to 2 - SUSPENSION/WHEEL ALIGNMENT - STANDARD PROCEDURE).

DIESEL

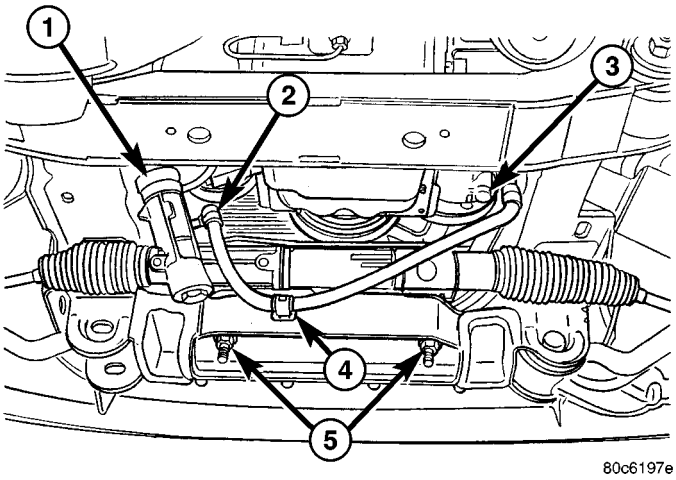

Fig. 14 RACK & PINION

1 - RACK & PINION
2 - HIGH PRESSURE HOSE
3 - POWER STEERING PUMP
4 - HIGH PRESSURE HOSE BRACKET
5 - RACK & PINION MOUNTING BOLTS

(1) Transfer the tie rod ends to the new steering gear (if needed).

(2) Install the steering gear (1) to the vehicle.

(3) Install the gear mounting bolts (5) to the front cradle. (Fig. 14). Tighten the gear mounting bolts to 162 N·m (120 ft.lbs.)

(4) Install the power steering lines (2) to the gear (1) (Fig. 14).

(5) Install the power steering pressure hose bracket (4) (Fig. 14).

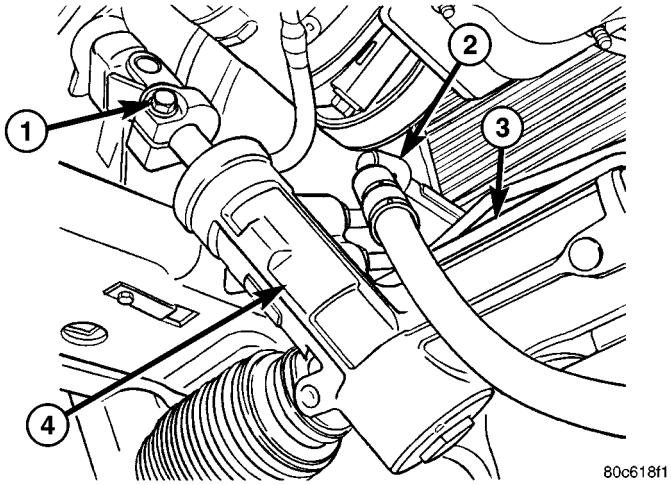

Fig. 15 COUPLER BOLT

1 - LOWER COUPLER & PINCH BOLT
2 - HIGH PRESSURE HOSE
3 - RETURN HOSE
4 - RACK & PINION

(6) Install the lower coupler pinch bolt (1) and slide the coupler on to the gear (4) (Fig. 15).

(7) Install the tie rod end to the knuckle and tighten the nuts.

(8) Install the front axle. (Refer to 3 - DIFFERENTIAL & DRIVELINE/FRONT AXLE - INSTALLATION).

(9) Install the lower control arms. (Refer to 2 - SUSPENSION/FRONT/LOWER CONTROL ARM - INSTALLATION).

(10) Install the tire and wheel assembly. (Refer to 22 - TIRES/WHEELS/WHEELS - STANDARD PROCEDURE).

(11) Install the skid plate (Refer to 13 - FRAME & BUMPERS/FRAME/FRONT SKID PLATE - INSTALLATION).

(12) Lower the vehicle.

(13) Unlock the steering wheel.

(14) Fill the power steering fluid (Refer to 19 - STEERING/PUMP - STANDARD PROCEDURE).

(15) Align the front end.

GEAR (Continued)

INSTALLATION - RHD - 4X2 & 4X4

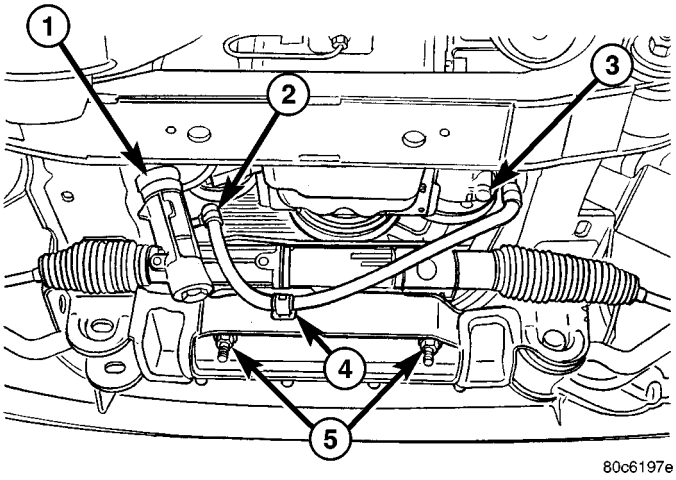

Fig. 16 RACK & PINION

1 - RACK & PINION
2 - HIGH PRESSURE HOSE
3 - POWER STEERING PUMP
4 - HIGH PRESSURE HOSE BRACKET
5 - RACK & PINION MOUNTING BOLTS

(1) Transfer the outer tie rod ends to the new steering gear (if needed).

(2) Install the steering gear (1) to the vehicle.

(3) Install the gear mounting bolts (5) to the front cradle. (Fig. 16). Tighten the gear mounting bolts to 162 N·m (120 ft.lbs.)

(4) Install the power steering lines (2) to the gear (1) (Fig. 16).

(5) Install the power steering pressure hose bracket (4) (Fig. 16).

(6) Install the lower coupler pinch bolt (1) and slide the coupler on to the gear (4) (Fig. 17).

(7) Install the tie rod end to the knuckle and tighten the nuts.

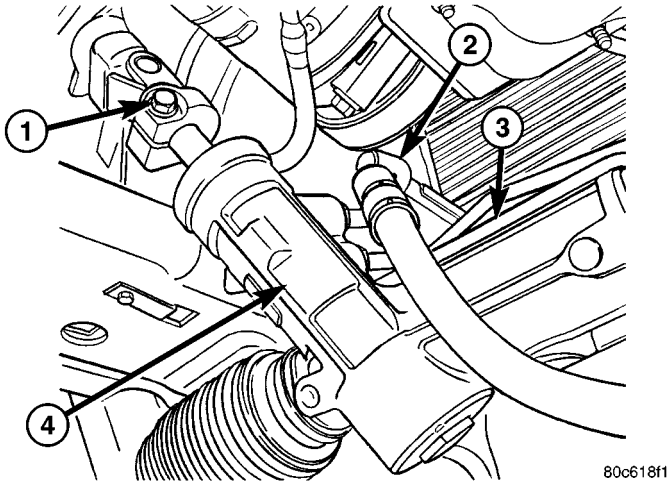

Fig. 17 COUPLER BOLT

1 - LOWER COUPLER & PINCH BOLT
2 - HIGH PRESSURE HOSE
3 - RETURN HOSE
4 - RACK & PINION

(8) Install the tire and wheel assembly. (Refer to 22 - TIRES/WHEELS/WHEELS - STANDARD PROCEDURE).

(9) Install the skid plate (Refer to 13 - FRAME & BUMPERS/FRAME/FRONT SKID PLATE - INSTALLATION).

(10) Lower the vehicle.

(11) Unlock the steering wheel.

(12) Fill the power steering fluid (Refer to 19 - STEERING/PUMP - STANDARD PROCEDURE).

(13) Reset the toe and center the steering wheel (Refer to 2 - SUSPENSION/WHEEL ALIGNMENT - STANDARD PROCEDURE).

GEAR (Continued)

SPECIFICATIONS

TORQUE CHART

TORQUE SPECIFICATIONS

DESCRIPTION	N·m	Ft. Lbs.	In. Lbs.
Rack and Pinion Steering Gear Gear to Frame Bolts	162	120	—
Rack and Pinion Steering Gear Intermediate Shaft Bolt	49	36	—
Tie Rod End Knuckle Nut	108	80	—
Tie Rod End Jam Nut	75	55	—
Power Steering Line Pressure Line	35	25	—
Power Steering Line Return Line	35	25	—

SPECIAL TOOLS

OUTER TIE ROD END REMOVAL TOOL

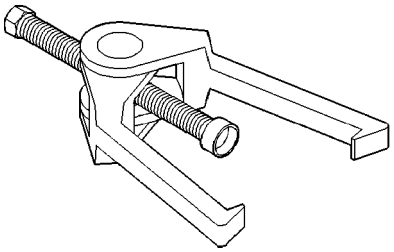

Puller C-3894-A

LINKAGE

TABLE OF CONTENTS

page

LINKAGE
STANDARD PROCEDURE - STEERING LINKAGE 23

TIE ROD END
REMOVAL 23
INSTALLATION 23

LINKAGE

STANDARD PROCEDURE - STEERING LINKAGE

The tie rod end and ball stud seals should be inspected during all oil changes. If a seal is damaged, replace the tie rod.

CAUTION: If any steering components are replaced or serviced an alignment must be performed, to ensure the vehicle meets all alignment specifications.

TIE ROD END

REMOVAL

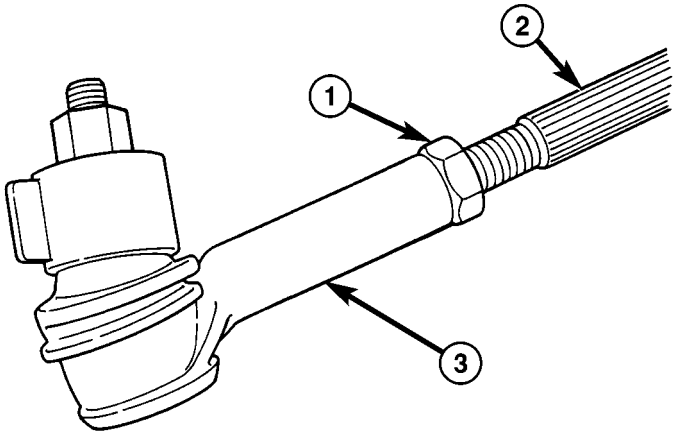

80cdf759

Fig. 1 TIE ROD END

1 - JAM NUT
2 - TIE ROD - INNER
3 - TIE ROD END - OUTER

(1) Raise and support the vehicle.
(2) Remove the tire and wheel assembly.

NOTE: Mark the tie rod end jam nuts on the steering gear for easier installation.

(3) Loosen the tie rod end jam nut (1) (Fig. 1).
(4) Remove the outer tie rod end (3) nut (Fig. 1).
(5) Separate the outer tie rod end (3) from the knuckle using tool C3894A.

NOTE: Count the number of turns when removing.

(6) Remove the outer tie rod end (3) from the inner tie rod (2) (Fig. 1).

INSTALLATION

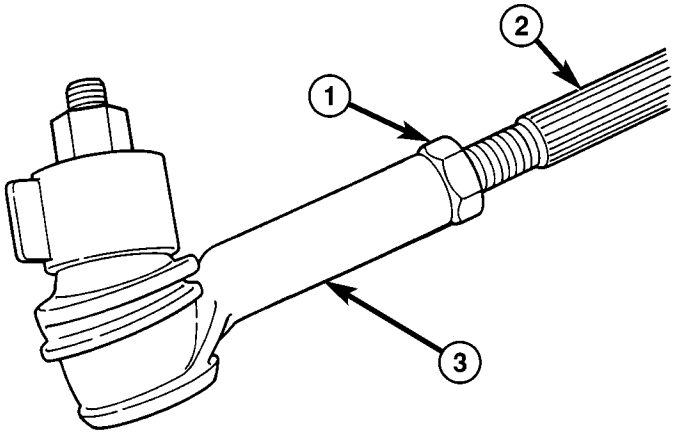

80cdf759

Fig. 2 TIE ROD END

1 - JAM NUT
2 - TIE ROD - INNER
3 - TIE ROD END - OUTER

(1) Install the outer tie rod end (3) to the inner tie rod end (2) to the exact number of turns that it was removed (Fig. 2).
(2) Install the outer tie rod end (3) to the knuckle. Tighten the nut to 108 N·m (80 ft.lbs).
(3) Tighten the jam nut to 76 N·m (55 ft.lbs). (Fig. 2).
(4) Install the tire and wheel assembly. (Refer to 22 - TIRES/WHEELS/WHEELS - STANDARD PROCEDURE).
(5) Reset the toe and center the steering wheel (Refer to 2 - SUSPENSION/WHEEL ALIGNMENT - STANDARD PROCEDURE).

PUMP

TABLE OF CONTENTS

page

PUMP
DESCRIPTION
DESCRIPTION 25
DESCRIPTION 25
OPERATION 25
STANDARD PROCEDURE
POWER STEERING PUMP - INITIAL OPERATION - GAS ENGINE 25
POWER STEERING PUMP - INITIAL OPERATION - DIESEL ENGINE 26
REMOVAL
2.8L- DIESEL 27
3.7L 27
2.4L 28
INSTALLATION
2.8L–DIESEL 28
3.7L 28
2.4L 29
SPECIFICATIONS
TORQUE CHART 29
SPECIAL TOOLS
POWER STEERING PUMP 30
FLUID
DESCRIPTION 30
STANDARD PROCEDURE - POWER STEERING FLUID LEVEL CHECKING 30
FLUID COOLER
DESCRIPTION 31
OPERATION 31
REMOVAL 31
INSTALLATION 32
HOSES
REMOVAL
PRESSURE HOSE 32
RETURN HOSE (GEAR TO THE COOLER) . . 32
RETURN HOSE (RESERVOIR TO THE COOLER) 33
PRESSURE / RETURN HOSE ASSEMBLY - DIESEL 33
INSTALLATION
PRESSURE HOSE 35
RETURN HOSE (GEAR TO THE COOLER) . . 35
RETURN HOSE (RESERVOIR TO THE COOLER) 36
PRESSURE / RETURN HOSE ASSEMBLY - DIESEL 36
POWER STEERING PRESSURE SWITCH
DESCRIPTION 38
OPERATION 38
REMOVAL 38
INSTALLATION 38
PULLEY
REMOVAL
DIESEL 39
GAS 39
INSTALLATION
DIESEL 40
GAS 40
RESERVOIR
REMOVAL
DIESEL 40
3.7L 41
2.4L 41
INSTALLATION
DIESEL 41
3.7L 41
2.4L 42

PUMP

DESCRIPTION

DESCRIPTION

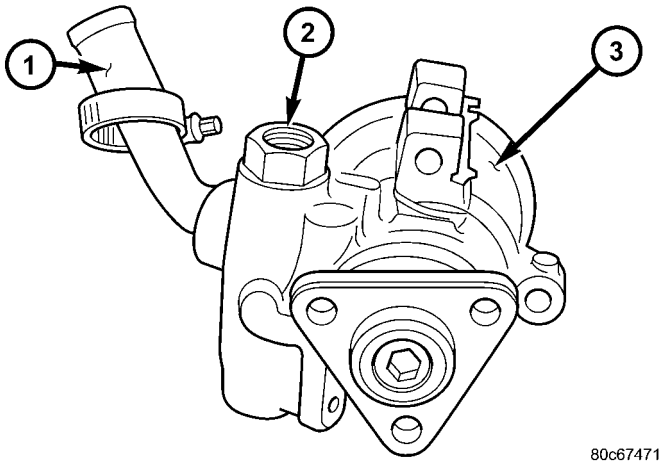

Fig. 1 POWER STEERING PUMP

1 - RETURN TUBE
2 - HIGH PRESSURE HOSE FITTING
3 - POWER STEERING PUMP BODY

Hydraulic pressure for the power steering system is provided by a belt driven power steering pump (3) (Fig. 1). The pump shaft has a bolt-on drive pulley that is belt driven by the crankshaft pulley. The reservoir is seperate from the pump body (3). The power steering pump is connected to the steering gear by the pressure and return hoses.

DESCRIPTION

Hydraulic pressure for the power steering system is provided by a belt driven power steering pump (4) (Fig. 2). The pump shaft has a pressed-on high strength plastic drive pulley (3) that is belt driven by the crankshaft pulley. The integral reservoir (1) used on the 3.7L only is attached to the pump body (4) with spring clips (5) (Fig. 2).

The 2.4L uses a remote fluid reservoir (Fig. 3). The power steering pump is connected to the steering gear by the pressure and return hoses.

OPERATION

The power steering pump is a constant flow rate and displacement, vane-type pump. The pump internal parts operate submerged in fluid. The flow control orifice is part of the high pressure line fitting. The pressure relief valve inside the flow control valve limits the pump pressure.

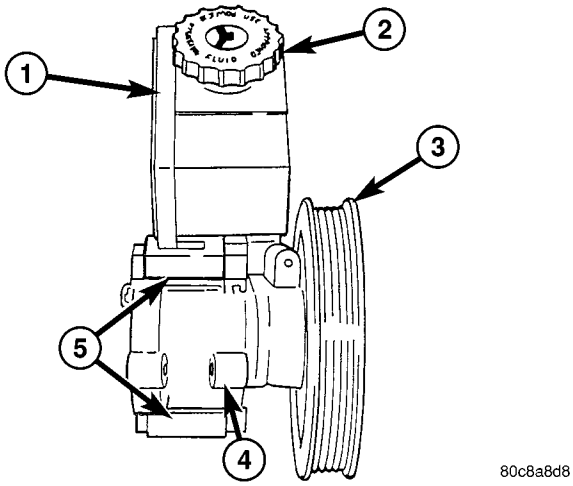

Fig. 2 POWER STEERING PUMP ASSEMBLY

1 - RESERVOIR
2 - CAP
3 - PULLEY
4 - PUMP BODY
5 - RESERVOIR RETAINING CLIPS

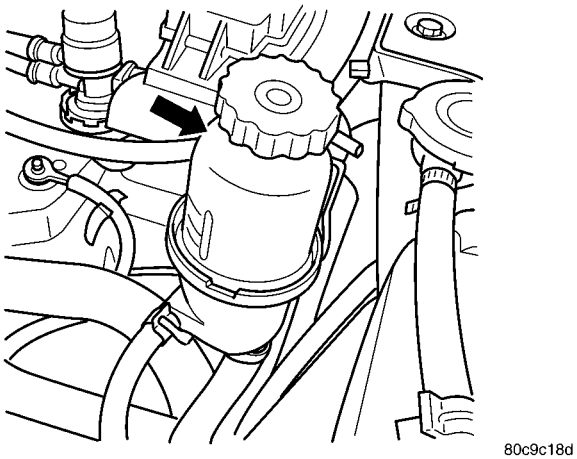

Fig. 3 FLUID RESERVOIR - 2.4L

NOTE: Power steering pumps have different pressure rates and are not interchangeable with other pumps.

STANDARD PROCEDURE

POWER STEERING PUMP - INITIAL OPERATION - GAS ENGINE

WARNING: THE FLUID LEVEL SHOULD BE CHECKED WITH ENGINE OFF TO PREVENT INJURY FROM MOVING COMPONENTS.

PUMP (Continued)

CAUTION: MOPAR® ATF+4 is to be used in the power steering system. No other power steering or automatic transmission fluid is to be used in the system. Damage may result to the power steering pump and system if any other fluid is used, and do not overfill.

Wipe filler cap clean, then check the fluid level. The dipstick should indicate **COLD** when the fluid is at normal ambient temperature.

(1) Fill the pump fluid reservoir to the proper level and let the fluid settle for at least two minutes.

(2) Raise the front wheels off the ground.

(3) Slowly turn the steering wheel right and left, lightly contacting the wheel stops at least 20 times.

(4) Check the fluid level add if necessary.

(5) Lower the vehicle, start the engine and turn the steering wheel slowly from lock to lock.

(6) Stop the engine and check the fluid level and refill as required.

CAUTION: Do not run a vehicle with foamy fluid for an extended period. This may cause pump damage.

(7) If the fluid is extremely foamy or milky looking, allow the vehicle to stand a few minutes and repeat the procedure.

(8) Add fluid if necessary. Repeat the above procedure until the fluid level remains constant after running the engine.

POWER STEERING PUMP - INITIAL OPERATION - DIESEL ENGINE

WARNING: THE FLUID LEVEL SHOULD BE CHECKED WITH ENGINE OFF TO PREVENT INJURY FROM MOVING COMPONENTS.

CAUTION: MOPAR® ATF+4 is to be used in the power steering system. No other power steering or automatic transmission fluid is to be used in the system. Damage may result to the power steering pump and system if any other fluid is used, and do not overfill.

NOTE: If the air is not purged from the power steering system correctly, pump failure could result.

Wipe filler cap clean, then check the fluid level. The dipstick should indicate **COLD** when the fluid is at normal ambient temperature.

PRE AIR EVACUATION PROCEDURE

(1) Fill the pump fluid reservoir to the proper level and let the fluid settle for at least two minutes.

(2) Remove the fuel rail electrical connector (Fig. 4).

(3) Crank the engine (DO NOT START) to pressurize the system.

(4) Check fluid level.

(5) Repeat steps #1 & #3).

(6) Reconnect the fuel rail electrical connector (Fig. 4).

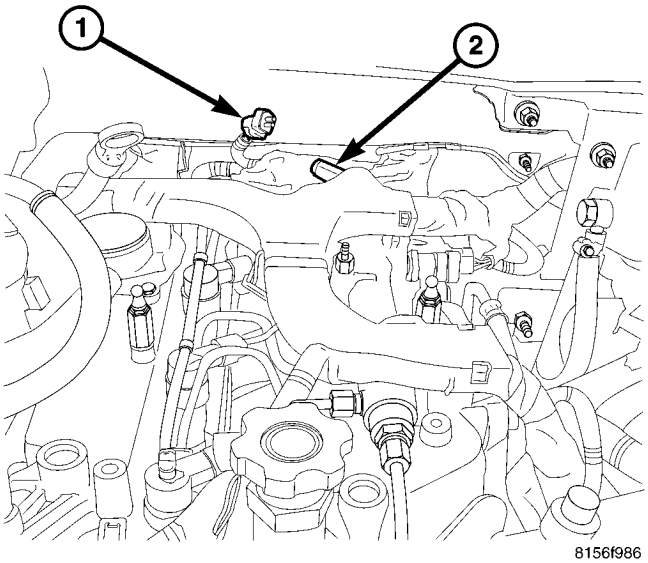

Fig. 4 FUEL RAIL ELECTRICAL CONNECTOR

1 - FUEL RAIL ELECTRICAL CONNECTOR
2 - FUEL RAIL

AIR EVACUATION AND FILL PROCEDURE

(1) Fill the pump fluid reservoir to the proper level at the cold mark.

(1) Tightly insert special tool 9688 onto the pump reservoir.

(2) Apply 20–25 in HG (68–85 Kpa) of vacuum for a minimum of 3 minutes.

(3) Remove the vacuum and special tool 9688 and add fluid to the proper level.

(4) Repeat steps #2 thru # 4 until fluid level stabilizes.

(5) Raise the vehicle so the front tires are off the ground.

(6) With special tool 9688 installed onto the reservoir apply 20–25 in HG (68–85 Kpa) of vacuum, while cycling the steering wheel from lock to lock every 30 seconds for approximately 5 minutes.

NOTE: Do not hold the steering wheel on stops.

(7) Remove the vacuum and add fluid if necessary.

(8) Start the engine and cycle the steering wheel from lock to lock every 30 seconds for approximately 5 minutes.

NOTE: Do not hold the steering wheel on stops.

PUMP (Continued)

(9) Stop the engine, lower the vehicle to the floor and check for leaks at all connections, Check for any signs of air in the reservoir, if air is present repeat the procedure if necessary.

(10) While the engine is off fill and adjust the fluid level to the desire level.

REMOVAL

2.8L- DIESEL

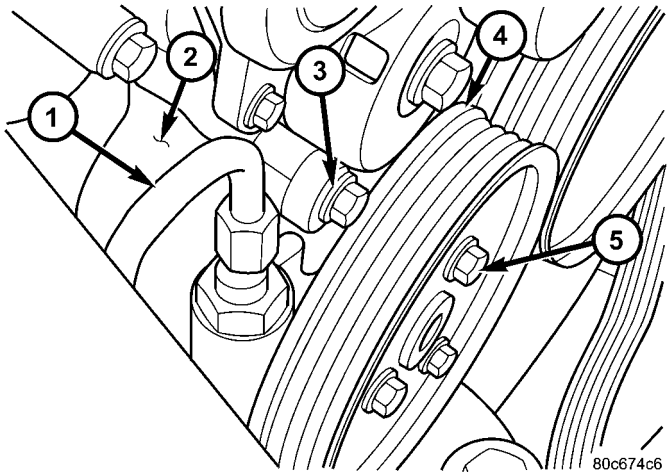

Fig. 5 POWER STEERING PUMP - DIESEL

1 - HIGH PRESSURE HOSE
2 - POWER STEERING PUMP
3 - POWER STEERING PUMP MOUNTING BOLT
4 - POWER STEERING PUMP PULLEY
5 - POWER STEERING PUMP PULLEY MOUNTING BOLTS

(1) Siphon out as much power steering fluid as possible.

(2) Remove the engine cooling fan.

(3) Remove the fan shroud

(4) Remove the serpentine drive belt.

(5) Remove the three bolts (5) securing the pulley (4) to the pump (2). (Fig. 5)

(6) Remove the power steering hoses (1). (Fig. 5)

(7) Remove the three bolts (3) securing the pump (2) to the bracket. (Fig. 5)

(8) Remove the pump from the vehicle.

3.7L

(1) Siphon out as much power steering fluid as possible.

(2) Remove the radiator cross member (Refer to 23 - BODY/EXTERIOR/RADIATOR CROSSMEMBER - REMOVAL).

(3) Remove the engine cooling fan (Refer to 7 - COOLING/ENGINE/RADIATOR FAN - REMOVAL).

(4) Remove the fan shroud

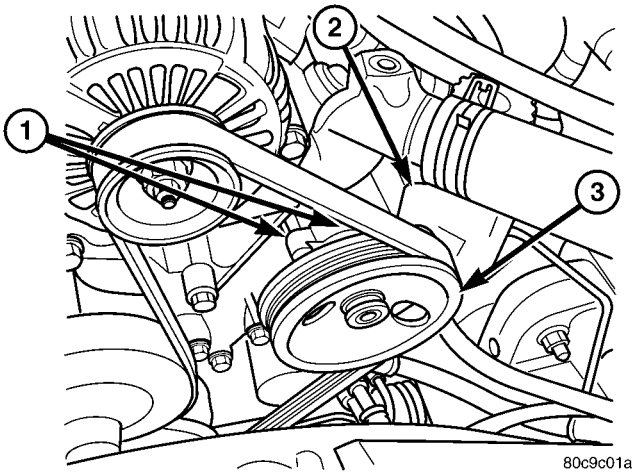

Fig. 6 POWER STEERING PUMP - 3.7L

1 - MOUNTING BOLTS
2 - RESERVOIR
3 - STEEL PULLEY

(5) Remove the serpentine drive belt (Refer to 7 - COOLING/ACCESSORY DRIVE/DRIVE BELTS - REMOVAL).

(6) Remove the power steering high pressure hose at the pump.

(7) Remove the return hose at the pump.

(8) Remove the three bolts (1) securing the pump to the bracket thru the holes in the pulley (3). (Fig. 6)

(9) Remove the pump from the vehicle.

PUMP (Continued)

2.4L

CAUTION: On vehicles equipped with the 2.4L, Do not reuse the old power steering pump pulley it is not intended for reuse. A new pulley must be installed if removed.

(1) Siphon out as much power steering fluid as possible.

(2) Remove the serpentine drive belt.

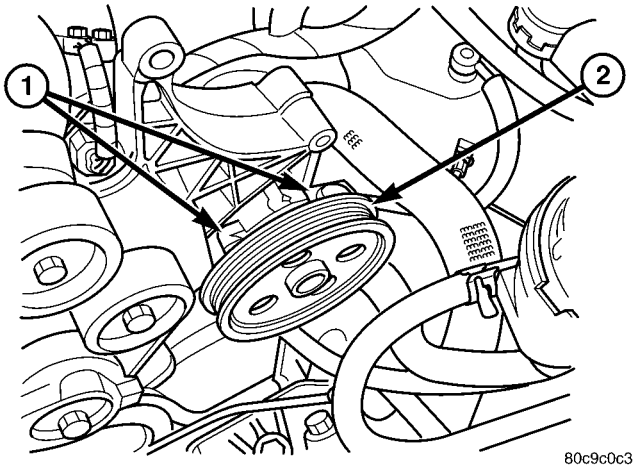

Fig. 7 POWER STEERING PUMP - 2.4L

1 - MOUNTING BOLTS
2 - PULLEY

(3) Remove the power steering high pressure hose at the pump using care not to remove the flow control valve.

(4) Remove the return hose at the pump.

(5) Remove the two nuts securing the wire loom behind the pump bracket.

(6) Remove the three bolts (1) securing the pump to the bracket thru the holes in the pulley (2). (Fig. 7)

(7) Remove the pump from the vehicle.

INSTALLATION

2.8L–DIESEL

(1) Install the pump to the vehicle.

(2) Install the three bolts (3) securing the pump (2) to the bracket. (Fig. 8).

(3) Install the power steering hoses (1). (Fig. 8)

(4) Install the three bolts (5) securing the pulley (4) to the pump (2). (Fig. 8).

(5) Install the serpentine belt.

(6) Install the fan shroud

(7) Install the engine cooling fan.

(8) Refill the power steering fluid and check for leaks.

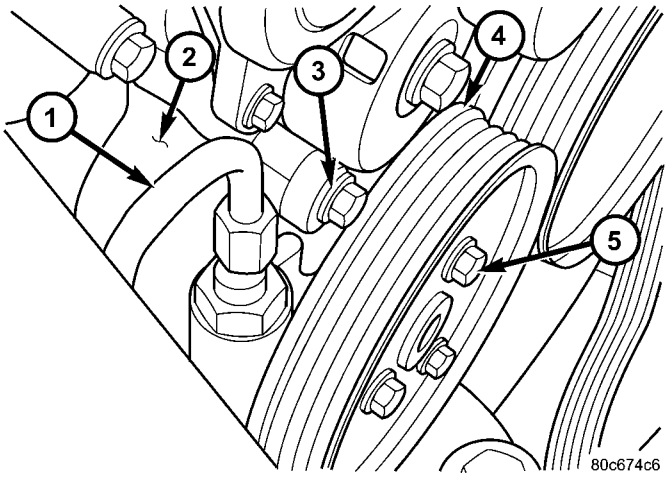

Fig. 8 POWER STEERING PUMP - DIESEL

1 - HIGH PRESSURE HOSE
2 - POWER STEERING PUMP
3 - POWER STEERING PUMP MOUNTING BOLT
4 - POWER STEERING PUMP PULLEY
5 - POWER STEERING PUMP PULLEY MOUNTING BOLTS

3.7L

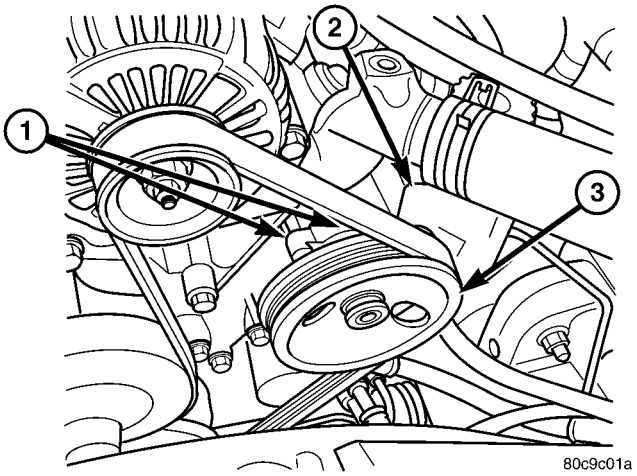

Fig. 9 POWER STEERING PUMP - 3.7L

1 - MOUNTING BOLTS
2 - RESERVOIR
3 - STEEL PULLEY

(1) Install the pump to the vehicle.

(2) Install the three bolts (1) securing the pump to the engine. (Fig. 9) Tighten the bolts to 47 N·m (35 ft.lbs.).

(3) Install the power steering hoses.

(4) Install the serpentine belt (Refer to 7 - COOLING/ACCESSORY DRIVE/DRIVE BELTS - INSTALLATION).

(5) Install the fan shroud

(6) Install the engine cooling fan (Refer to 7 - COOLING/ENGINE/RADIATOR FAN - INSTALLATION).

PUMP (Continued)

(7) Install the radiator crossmember (Refer to 23 - BODY/EXTERIOR/RADIATOR CROSSMEMBER - INSTALLATION).

(8) Refill the power steering fluid and check for leaks (Refer to 19 - STEERING/PUMP - STANDARD PROCEDURE).

2.4L

(1) Install the pump to the vehicle.

(2) Install the three bolts (1) securing the pump to the engine. (Fig. 10) Tighten the bolts to 47 N·m (35 ft.lbs.).

(3) Install the two nuts securing the wire loom to the pump bracket.

(4) Install the power steering pressure and supply hoses.

(5) Install the serpentine belt (Refer to 7 - COOLING/ACCESSORY DRIVE/DRIVE BELTS - INSTALLATION).

(6) Refill the power steering fluid and check for leaks (Refer to 19 - STEERING/PUMP - STANDARD PROCEDURE).

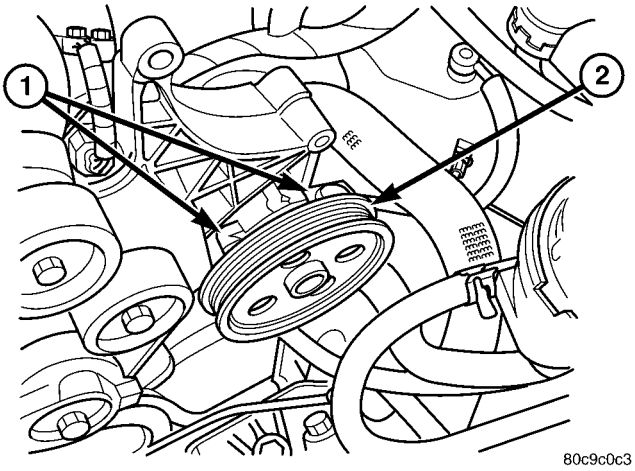

Fig. 10 POWER STEERING PUMP - 2.4L

1 - MOUNTING BOLTS
2 - PULLEY

SPECIFICATIONS

TORQUE CHART

TORQUE SPECIFICATIONS

DESCRIPTION	N·m	Ft. Lbs.	In. Lbs.
Power Steering Pump Bracket to Pump	28	21	—
Power Steering Pump Bracket to Engine	47	35	—
Power Steering Pump Flow Control Valve	75	55	—
Power Steering Pump Pressure Line	28	21	—
Power Steering Pump Pressure Line Bracket	12	9	105

PUMP (Continued)

SPECIAL TOOLS

POWER STEERING PUMP

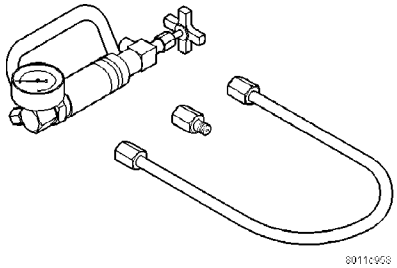

Analyzer Set, Power Steering Flow/Pressure 6815

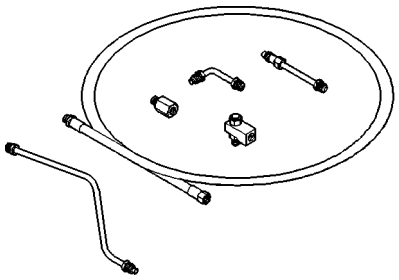

Adapters, Power Steering Flow/Pressure Tester 6893

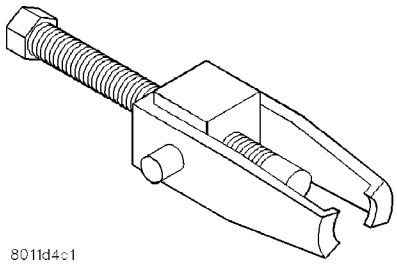

Puller C-4333

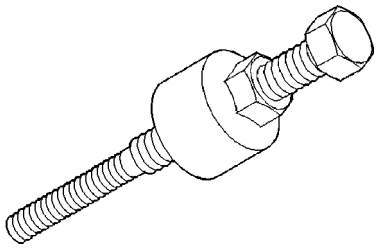

Installer, Power Steering Pulley C-4063B

FLUID

DESCRIPTION

The recommended fluid for the power steering system is Mopar® ATF +4.

Mopar® ATF+4, when new is red in color. The ATF+4 is dyed red so it can be identified from other fluids used in the vehicle such as engine oil or anti-freeze. The red color is not permanent and is not an indicator of fluid condition, As the vehicle is driven, the ATF+4 will begin to look darker in color and may eventually become brown. **THIS IS NORMAL.** ATF+4 also has a unique odor that may change with age. Consequently, odor and color cannot be used to indicate the fluid condition or the need for a fluid change.

STANDARD PROCEDURE - POWER STEERING FLUID LEVEL CHECKING

WARNING: FLUID LEVEL SHOULD BE CHECKED WITH THE ENGINE OFF TO PREVENT PERSONAL INJURY FROM MOVING PARTS.

CAUTION: MOPAR® ATF+4 is to be used in the power steering system. No other power steering or automatic transmission fluid is to be used in the system. Damage may result to the power steering pump and system if any other fluid is used, and do not overfill.

The power steering fluid level can be viewed on the dipstick attached to the filler cap. There are two ranges listed on the dipstick, COLD and HOT. Before opening power steering system, wipe the reservoir filler cap free of dirt and debris. Remove the cap and check the fluid level on its dipstick. When the fluid is at normal ambient temperature, approximately 21°C to 27°C (70°F to 80°F), the fluid level should read between the minimum and maximum area of the cold range. When the fluid is hot, fluid level is allowed to read up to the highest end of the HOT range. Only add fluid when the vehicle is cold.

Use only Mopar® ATF+4 Do not overfill the power steering system.

FLUID COOLER

DESCRIPTION

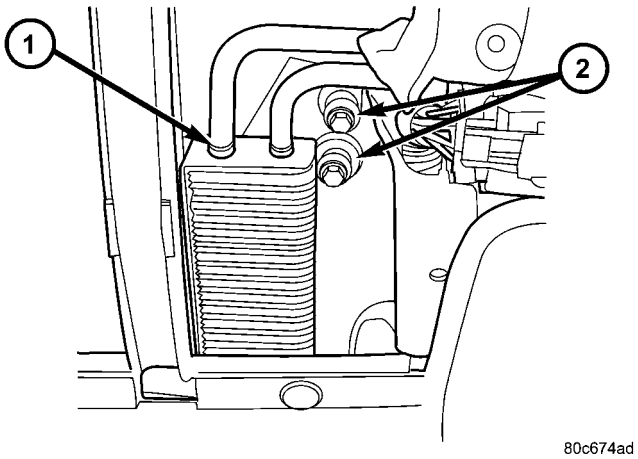

Fig. 11 FLUID COOLER

1 - FLUID COOLER
2 - MOUNTING BOLTS

The power steering fluid cooler (1) is located at the front of the vehicle. It is mounted to the radiator lower support just forward of the air-conditioning condenser and just rearward of the front fascia. The cooler is positioned so it is in the air flow through the front fascia of the vehicle (Fig. 11)

OPERATION

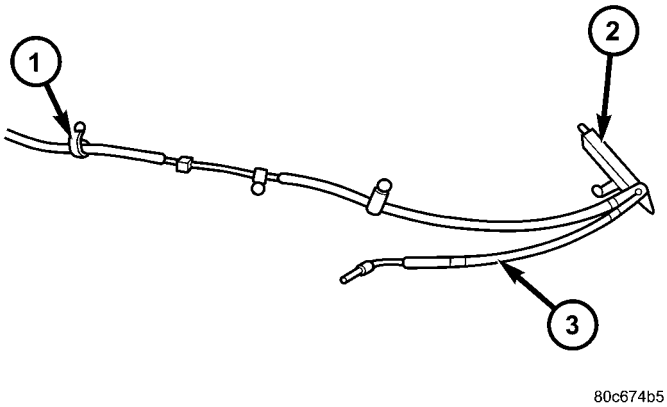

Fig. 12 FLUID COOLER & HOSES

1 - RETURN HOSE
2 - FLUID COOLER

The purpose of the power steering fluid cooler (2) is to keep the temperature of the power steering system fluid from rising to a level that would affect the performance of the power steering system (Fig. 12).

The cooler used on this vehicle is referred to as a fluid-to-air type cooler. This means that the air flow across the fin/tubes of the cooler is used to extract the heat from the cooler which it has absorbed from the power steering fluid flowing through it. The cooler is placed in series with the power steering fluid return line (1) (Fig. 12), between the steering gear and the power steering fluid reservoir. This lowers the temperature of the power steering fluid prior to it entering the power steering fluid reservoir where it is resupplied to the power steering pump.

REMOVAL

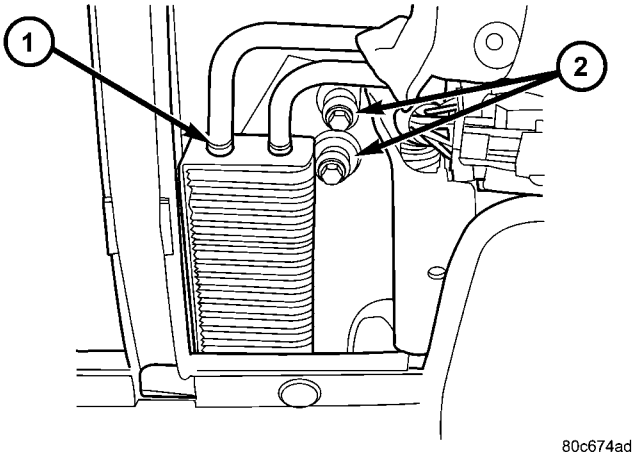

Fig. 13 FLUID COOLER

1 - FLUID COOLER
2 - MOUNTING BOLTS

(1) Remove the return line at the gear.
(2) Remove the return line at the reservoir.
(3) Remove the grille (Refer to 23 - BODY/EXTERIOR/GRILLE - REMOVAL).
(4) Remove the two cooler mounting bolts (2). (Fig. 13)
(5) Remove the cooler (1) from the vehicle.

FLUID COOLER (Continued)

INSTALLATION

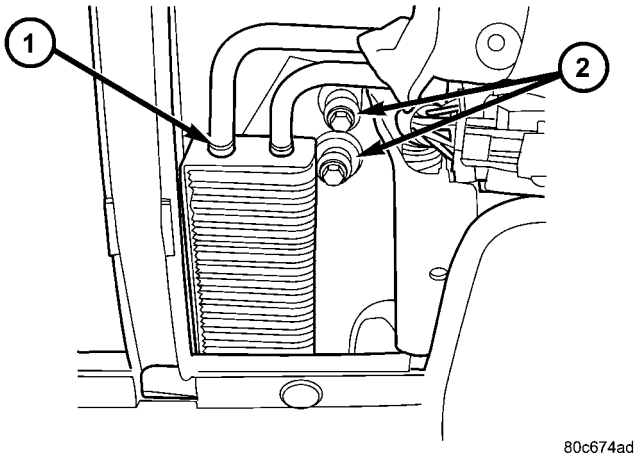

Fig. 14 FLUID COOLER

1 - FLUID COOLER
2 - MOUNTING BOLTS

(1) Install the cooler (1) to the vehicle.
(2) Install the two cooler mounting bolts (2). (Fig. 14).
(3) Install the grille (Refer to 23 - BODY/EXTERIOR/GRILLE - INSTALLATION).
(4) Install the return line at the reservoir.
(5) Install the return line at the gear.
(6) Refill the power steering fluid and check for leaks (Refer to 19 - STEERING/PUMP - STANDARD PROCEDURE).

HOSES

REMOVAL

PRESSURE HOSE

(1) Siphon the power steering fluid from the reservoir.
(2) Remove the radiator crossmember (Refer to 23 - BODY/EXTERIOR/RADIATOR CROSSMEMBER - REMOVAL).
(3) Remove the fan (Refer to 7 - COOLING/ENGINE/RADIATOR FAN - REMOVAL).
(4) Remove the fan shroud.
(5) Remove the serpentine belt (Refer to 7 - COOLING/ACCESSORY DRIVE/DRIVE BELTS - REMOVAL).
(6) Remove the pressure hose (2) at the pump (3) (Fig. 15).
(7) Disconnect the pressure switch electrical connector from the pressure hose **2.4L only**.
(8) Remove the pressure hose from the gear.

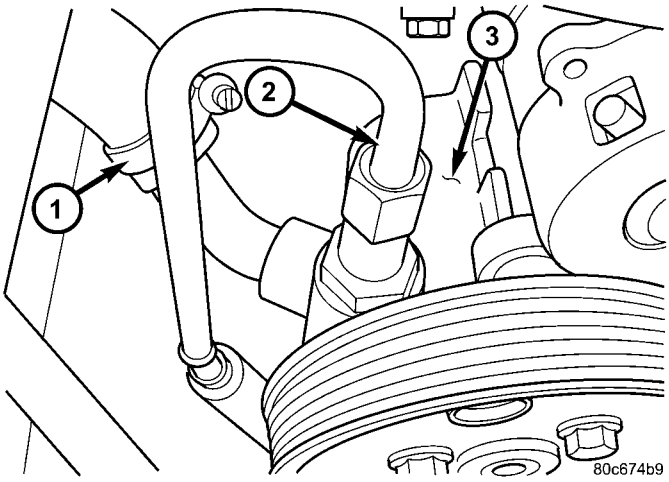

Fig. 15 RETURN & PRESSURE HOSE

1 - RETURN HOSE
2 - HIGH PRESSURE HOSE
3 - POWER STEERING PUMP

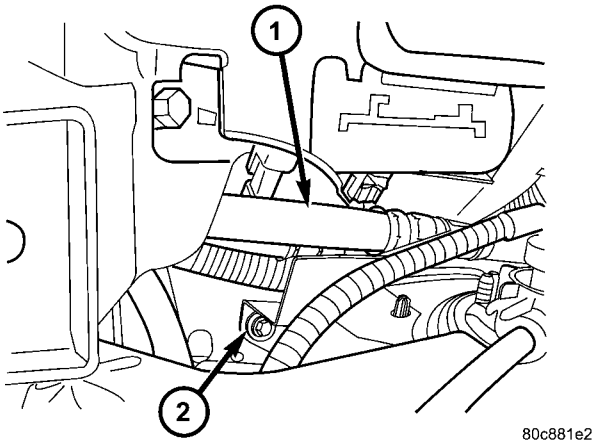

Fig. 16 MOUNTING BRACKET

1 - HIGH PRESSURE POWER STEERING HOSE
2 - MOUNTING BRACKET

(9) Remove the pressure hose (1) mounting bracket bolts (2) from behind the headlamp assembly. (Fig. 16)
(10) Remove the pressure hose (1) from the vehicle and transfer power steering pressure switch if necessary.

RETURN HOSE (GEAR TO THE COOLER)

(1) Siphon the power steering fluid from the reservoir.
(2) Remove the radiator crossmember (Refer to 23 - BODY/EXTERIOR/RADIATOR CROSSMEMBER - REMOVAL).
(3) Remove the fan (Refer to 7 - COOLING/ENGINE/RADIATOR FAN - REMOVAL).
(4) Remove the fan shroud.

HOSES (Continued)

(5) Remove the serpentine belt (Refer to 7 - COOLING/ACCESSORY DRIVE/DRIVE BELTS - REMOVAL).

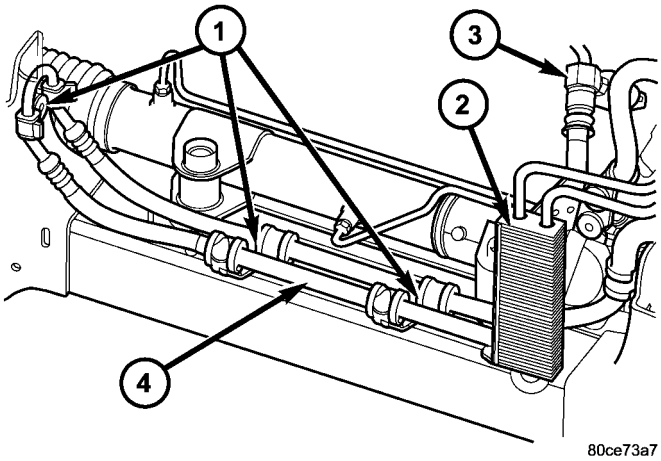

Fig. 17 RETURN HOSE TO COOLER

1 - MOUNTING BRACKETS
2 - FLUID COOLER
3 - PRESSURE SWITCH
4 - RETURN HOSE

(6) Remove the return hose (4) from the gear.
(7) Remove the return hose (4) at the cooler (2).
(8) Remove the return hose mounting bracket bolts (1) from the front cradle. (Fig. 17)
(9) Remove the return hose from the vehicle.

RETURN HOSE (RESERVOIR TO THE COOLER)

(1) Siphon the power steering fluid from the reservoir.
(2) Remove the return hose from the pump reservoir.
(3) Remove the return hose at the cooler.
(4) Remove the return hose from the vehicle.

PRESSURE / RETURN HOSE ASSEMBLY - DIESEL

(1) Siphon the power steering fluid from the reservoir.
(2) Remove the air box (Refer to 9 - ENGINE/AIR INTAKE SYSTEM/AIR CLEANER HOUSING - REMOVAL).
(3) Remove the clutch fan (Refer to 7 - COOLING/ENGINE/RADIATOR FAN - REMOVAL).
(4) Remove the fan shroud.
(5) Remove the front fascia (Refer to 13 - FRAME & BUMPERS/BUMPERS/FRONT FASCIA - REMOVAL).
(6) Remove the grille and reinforcement (Refer to 23 - BODY/EXTERIOR/GRILLE OPENING REINFORCEMENT - REMOVAL).
(7) Remove the pressure line at the pump (Fig. 20).
(8) Remove the return hose at the reservoir (Fig. 20).
(9) Remove the pressure line routing bracket bolts behind the left headlight bucket (Fig. 18).

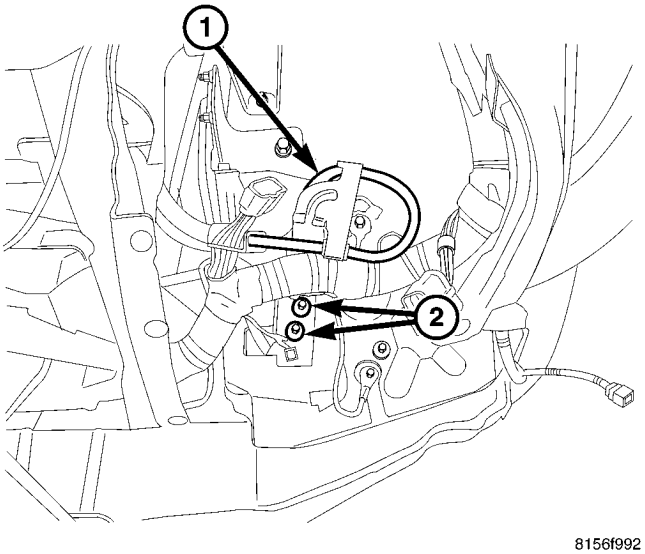

Fig. 18 HOSE BEHIND HEAD LAMP

1 - HOSE
2 - MOUNTING BRACKET

(10) Remove the pressure line mounting bracket at the frame both right and left side (Fig. 19).

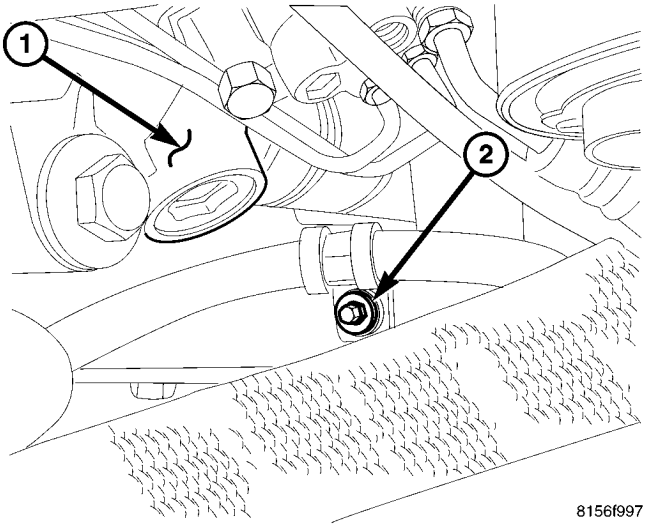

Fig. 19 MOUNTING BRACKET AT FRAME

1 - GEAR
2 - MOUNTING BRACKET

HOSES (Continued)

(11) Remove the pressure line at the gear (Fig. 20).
(12) Remove the return line at the gear (Fig. 20).

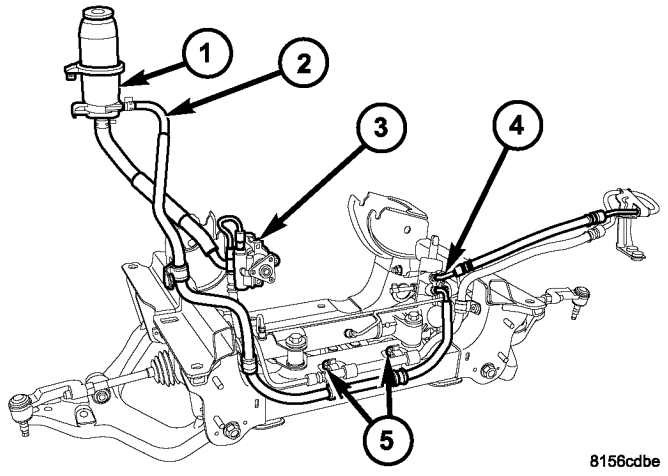

Fig. 20 HOSE ROUTING

1 - RESERVOIR
2 - RETURN HOSE
3 - PUMP
4 - PRESSURE LINE AT GEAR
5 - MOUNTING BRACKET BOLTS

(13) Remove the pressure / return line mounting bracket bolts at the frame (Fig. 21).

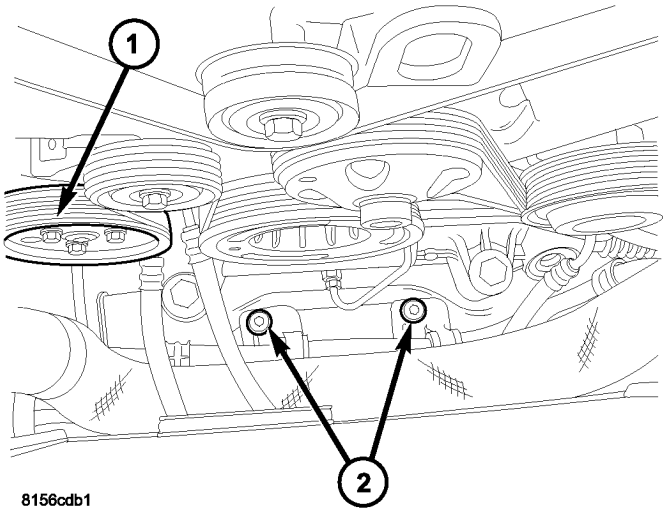

Fig. 21 PSI & RET HOSE MOUNTING BRACKETS

1 - POWER STEERING PULLEY
2 - PRESSURE/RETURN HOSE MOUNTING BOLTS

(14) Raise and support the vehicle.
(15) Remove the skid plate. (Refer to 13 - FRAME & BUMPERS/FRAME/FRONT SKID PLATE - REMOVAL).
(16) Remove the push pins and then the lower engine belly pan.
(17) Remove the suppressor mounting bolts at the frame (Fig. 22).

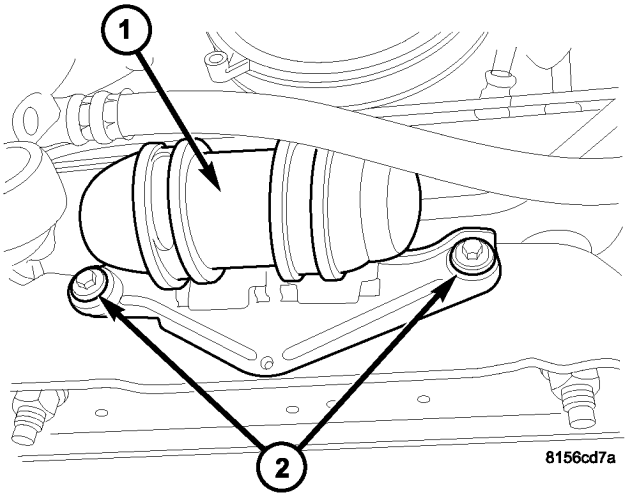

Fig. 22 SUPPRESSOR

1 - SUPPRESSOR
2 - MOUNTING BOLTS

(18) Remove the pressure/return hose from the vehicle (Fig. 23).

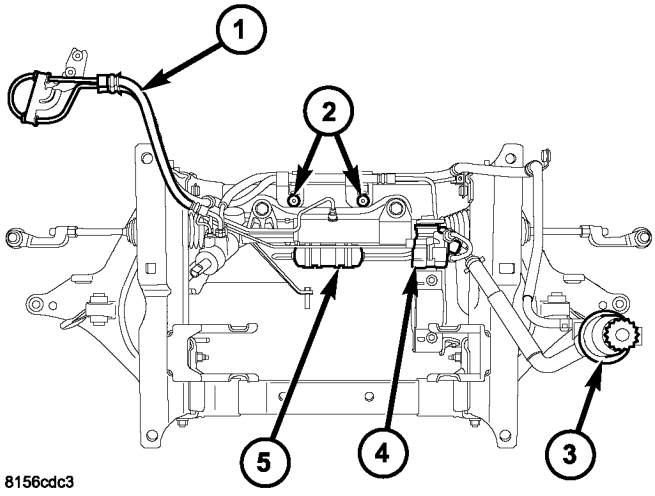

Fig. 23 SUPPRESSOR LOCATION

1 - PRESSURE/RETURN HOSE MOUNTING BEHIND LEFT HEADLAMP
2 - PRESSURE/RETURN HOSE MOUNTING BRACKETS
3 - RESERVOIR
4 - PUMP
5 - SUPPRESSOR

HOSES (Continued)

INSTALLATION

PRESSURE HOSE

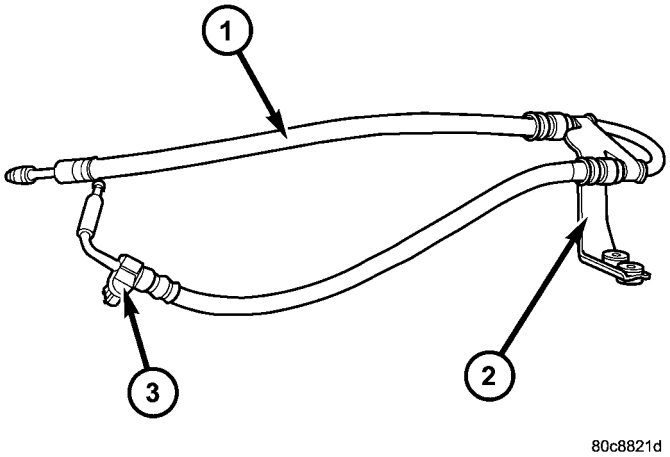

Fig. 24 HIGH PRESSURE HOSE ASSEMBLY

1 - HIGH PRESSURE POWER STEERING HOSE
2 - MOUNTING BRACKET
3 - POWER STEERING PRESURE SWITCH (2.4L only)

(1) Install the pressure hose (1) to the vehicle. (Fig. 24).

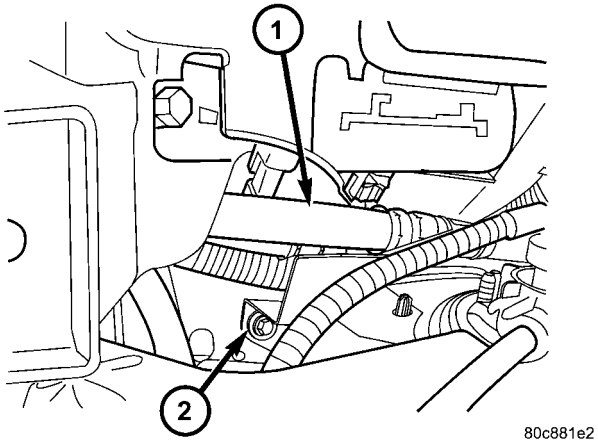

Fig. 25 MOUNTING BRACKET

1 - HIGH PRESSURE POWER STEERING HOSE
2 - MOUNTING BRACKET

(2) Install the pressure hose mounting bracket bolts (2) behind the headlamp assembly (Fig. 25). Tighten to to 12 N·m (9 ft.lbs.).

(3) Install the pressure hose to the gear. Tighten the hose to28 N·m (21 ft.lbs.).

(4) Install the pressure switch electrical connector **2.4L only**.

(5) Install the pressure hose (2) at the pump (3) (Fig. 26). Tighten the hose to28 N·m (21 ft.lbs.).

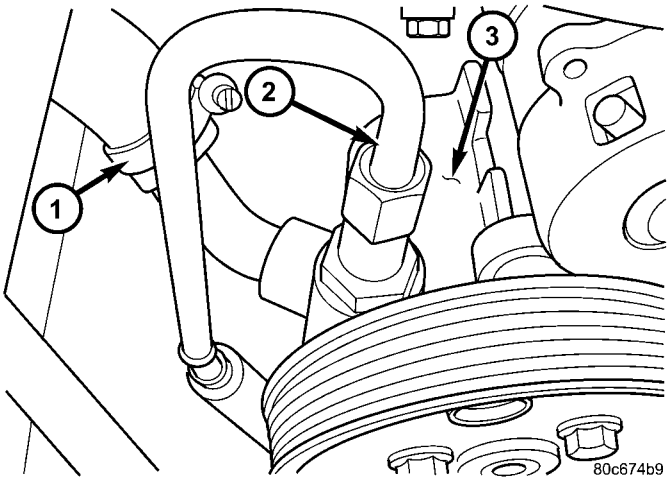

Fig. 26 RETURN & PRESSURE HOSE

1 - RETURN HOSE
2 - HIGH PRESSURE HOSE
3 - POWER STEERING PUMP

(6) Install the serpentine belt (Refer to 7 - COOLING/ACCESSORY DRIVE/DRIVE BELTS - INSTALLATION).

(7) Install the fan shroud.

(8) Install the fan (Refer to 7 - COOLING/ENGINE/RADIATOR FAN - INSTALLATION).

(9) Install the radiator crossmember (Refer to 23 - BODY/EXTERIOR/RADIATOR CROSSMEMBER - INSTALLATION).

(10) Refill the power steering fluid (Refer to 19 - STEERING/PUMP - STANDARD PROCEDURE).

RETURN HOSE (GEAR TO THE COOLER)

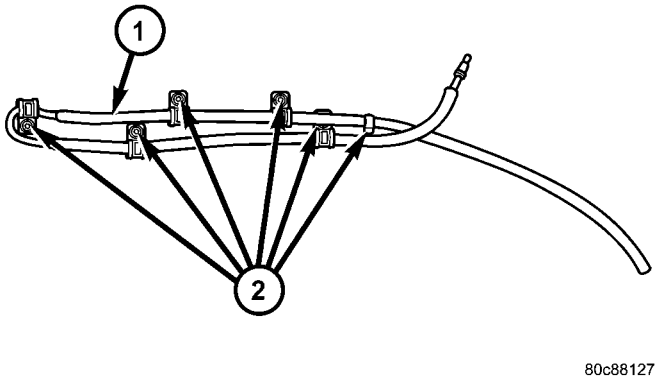

Fig. 27 RETURN HOSE

1 - RETURN HOSE
2 - MOUNTING BRACKETS

(1) Install the return hose (1) to the vehicle. (Fig. 27)

HOSES (Continued)

(2) Install the return hose mounting bracket bolts (2) to the front cradle.

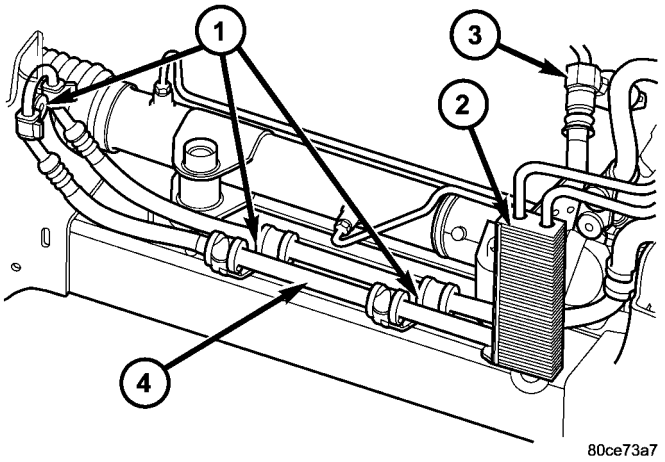

Fig. 28 RETURN HOSE TO COOLER

1 - MOUNTING BRACKETS
2 - FLUID COOLER
3 - PRESSURE SWITCH
4 - RETURN HOSE

(3) Install the return hose (4) at the cooler (2) (Fig. 28).

(4) Install the return hose at the gear 28 N·m (21 ft.lbs.).

(5) Install the serpentine belt (Refer to 7 - COOLING/ACCESSORY DRIVE/DRIVE BELTS - INSTALLATION).

(6) Install the fan shroud.

(7) Install the fan (Refer to 7 - COOLING/ENGINE/RADIATOR FAN - INSTALLATION).

(8) Install the radiator crossmember (Refer to 23 - BODY/EXTERIOR/RADIATOR CROSSMEMBER - INSTALLATION).

(9) Refill the power steering fluid (Refer to 19 - STEERING/PUMP - STANDARD PROCEDURE).

RETURN HOSE (RESERVOIR TO THE COOLER)

(1) Install the return hose to the vehicle.

(2) Install the return hose to the pump reservoir.

(3) Install the return hose at the cooler.

(4) Refill the power steering fluid (Refer to 19 - STEERING/PUMP - STANDARD PROCEDURE).

PRESSURE / RETURN HOSE ASSEMBLY - DIESEL

(1) Install the pressure/return hose to the vehicle (Fig. 29).

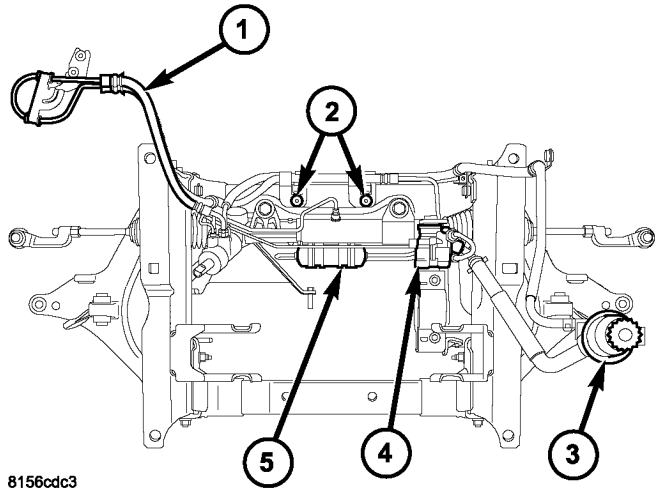

Fig. 29 SUPPRESSOR LOCATION

1 - PRESSURE/RETURN HOSE MOUNTING BEHIND LEFT HEADLAMP
2 - PRESSURE/RETURN HOSE MOUNTING BRACKETS
3 - RESERVOIR
4 - PUMP
5 - SUPPRESSOR

(2) Install the suppressor mounting bolts to the frame (Fig. 30).

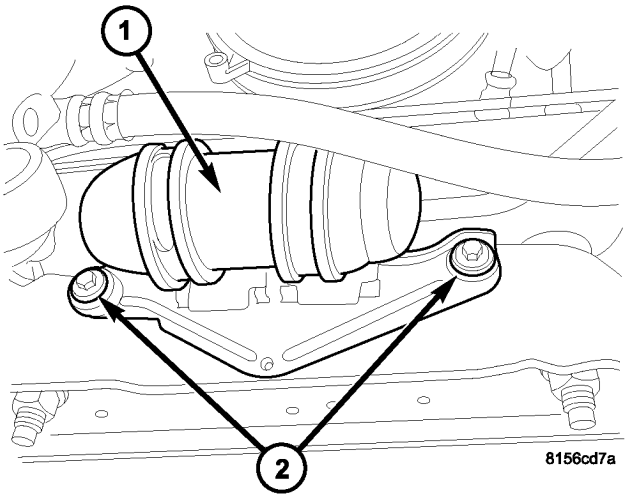

Fig. 30 SUPPRESSOR

1 - SUPPRESSOR
2 - MOUNTING BOLTS

HOSES (Continued)

(3) Install the pressure/return hose mounting bracket bolts to the front cradle (Fig. 31).

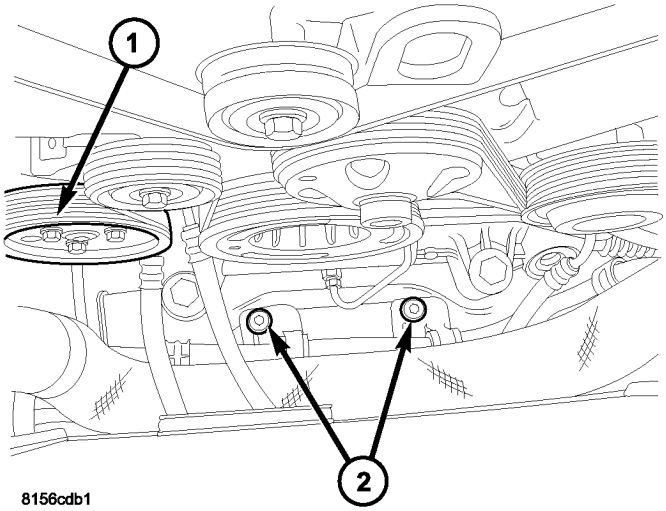

Fig. 31 PSI & RET HOSE MOUNTING BRACKETS

1 - POWER STEERING PULLEY
2 - PRESSURE/RETURN HOSE MOUNTING BOLTS

(4) Install the return hose at the gear (Fig. 34).

(5) Install the pressure hose at the gear (Fig. 34).

(6) Install the pressure/return hose mounting bracket to the left and right sides of the cradle (Fig. 32).

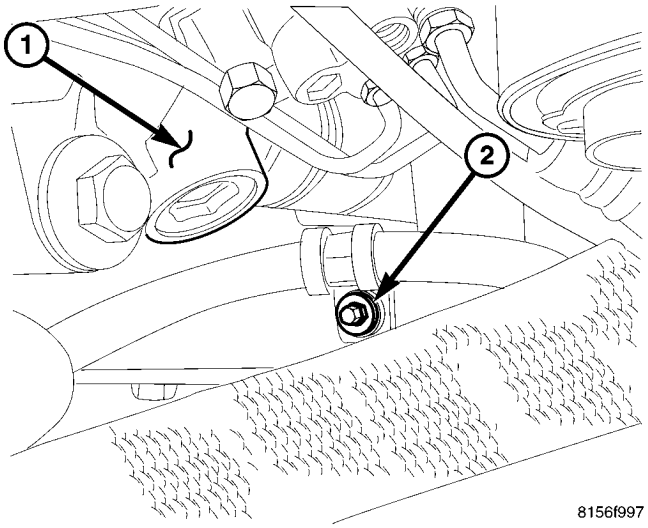

Fig. 32 MOUNTING BRACKET AT FRAME

1 - GEAR
2 - MOUNTING BRACKET

(7) Install the two bolts for the hose behind the headlamp bucket on the left side (Fig. 33).

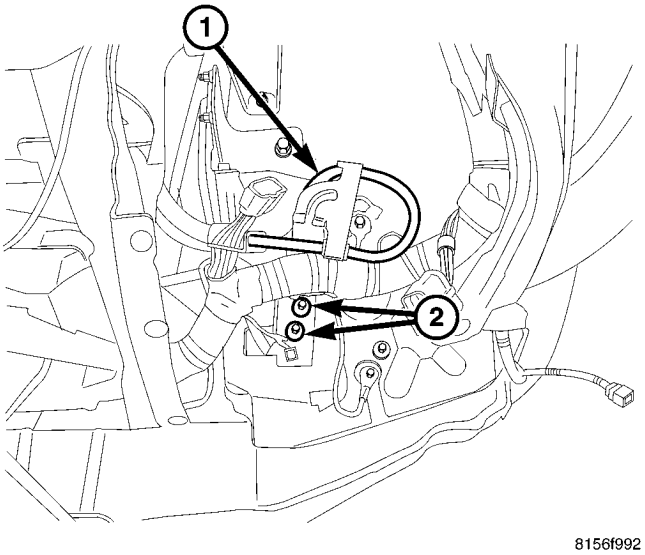

Fig. 33 HOSE BEHIND HEAD LAMP

1 - HOSE
2 - MOUNTING BRACKET

(8) Install the return hose at the reservoir (Fig. 34).

(9) Install the pressure line at the pump (Fig. 34).

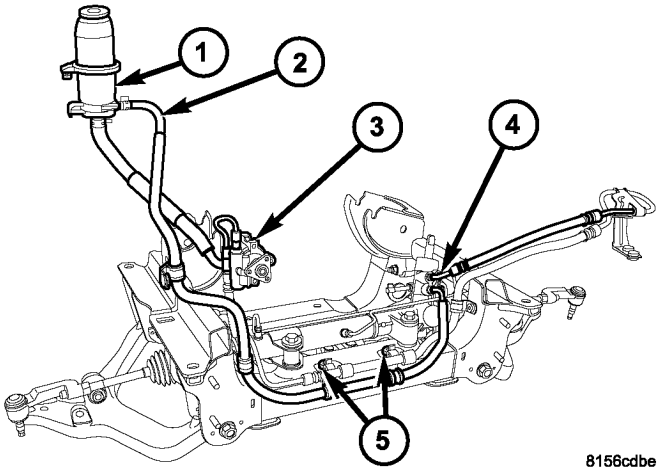

Fig. 34 HOSE ROUTING

1 - RESERVOIR
2 - RETURN HOSE
3 - PUMP
4 - PRESSURE LINE AT GEAR
5 - MOUNTING BRACKET BOLTS

(10) Install the fan shroud.

(11) Install the clutch fan (Refer to 7 - COOLING/ENGINE/RADIATOR FAN - INSTALLATION).

HOSES (Continued)

(12) Install the airbox (Refer to 9 - ENGINE/AIR INTAKE SYSTEM/AIR CLEANER HOUSING - INSTALLATION).

(13) Refill the power steering fluid.

(14) Bleed the power steering system (Refer to 19 - STEERING/PUMP - STANDARD PROCEDURE).

(15) Check for leaks.

(16) Install the grille and grille reinforcement (Refer to 23 - BODY/EXTERIOR/GRILLE OPENING REINFORCEMENT - INSTALLATION).

(17) Install the front fascia (Refer to 13 - FRAME & BUMPERS/BUMPERS/FRONT FASCIA - INSTALLATION).

(18) Raise the vehicle and install the lower engine belly pan and push pins.

(19) Install the skid plate (Refer to 13 - FRAME & BUMPERS/FRAME/FRONT SKID PLATE - INSTALLATION).

POWER STEERING PRESSURE SWITCH

DESCRIPTION

A pressure sensing switch is used in the power steering system. It is mounted on the high-pressure steering hose. This switch will be used with the 2.4L engine only.

OPERATION

The switch is used on the 2.4L 4–cylinder engine.

The power steering pressure switch provides an input to the Powertrain Control Module (PCM). This input is provided during periods of high steering pump load and low engine rpm; such as during parking maneuvers. The PCM increases the idle speed through the Idle Air Control (IAC) motor. This is done to prevent the engine from stalling under the increased load.

When steering pump pressure exceeds 5860 kPa ± 690 kPa (850 psi ± 100 psi), the Normally Closed (NC) switch will open and the PCM will increase the engine idle speed. This will prevent the engine from stalling.

When pump pressure drops to approximately 1379 kPa (200 psi), the switch circuit will re-close and engine idle speed will return to its previous setting.

REMOVAL

The power steering pressure switch (2) is installed in the power steering high-pressure hose (3) (Fig. 35).

(1) Remove the high pressure power steering hose (3) (Refer to 19 - STEERING/PUMP/HOSES - REMOVAL).

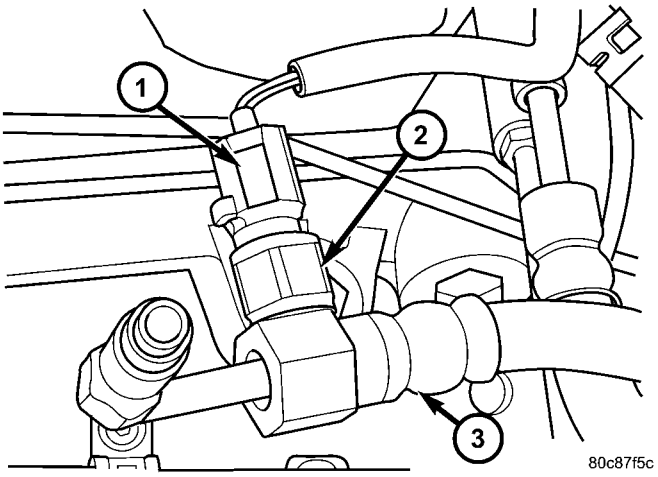

Fig. 35 PRESSURE SWITCH

1 - ELECTRICAL CONNECTOR
2 - PRESSURE SWITCH
3 - HIGH PRESSURE POWER STEERING HOSE

(2) Disconnect electrical connector (1) from power steering pressure switch (2).

(3) Place a small container or shop towel beneath switch to collect any excess fluid.

(4) Remove switch. Use back-up wrench on power steering line to prevent line bending.

INSTALLATION

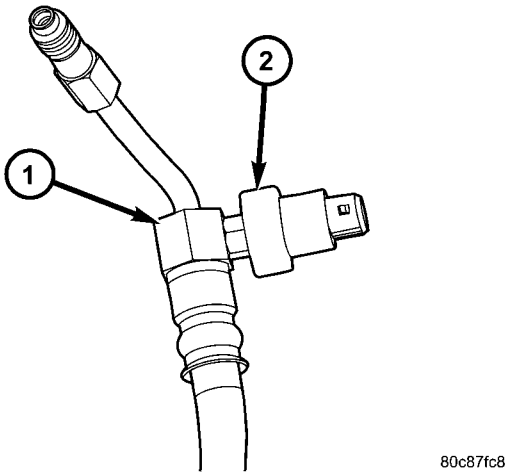

Fig. 36 POWER STEERING PRESSURE SWITCH

1 - HIGH PRESSURE POWER STEERING HOSE
2 - POWER STEERING PRESSURE SWITCH

(1) Install power steering switch (2) into power steering line (1). (Fig. 36) and Tighten to 9.6 N·m (85 in. lbs.).

POWER STEERING PRESSURE SWITCH (Continued)

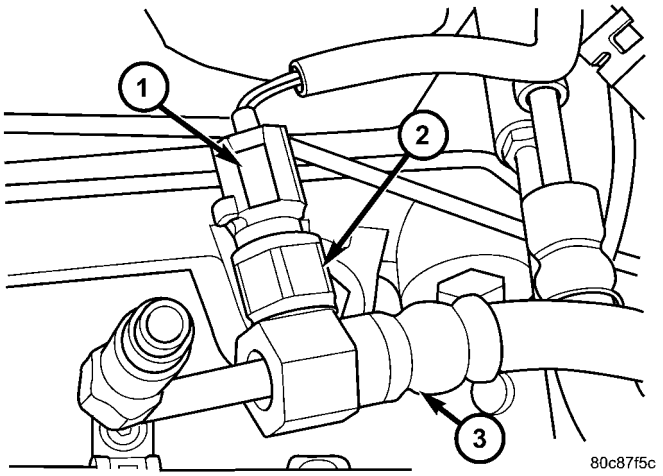

Fig. 37 PRESSURE SWITCH

1 - ELECTRICAL CONNECTOR
2 - PRESSURE SWITCH
3 - HIGH PRESSURE POWER STEERING HOSE

(2) Install the high pressure power steering hose (3) (Refer to 19 - STEERING/PUMP/HOSES - INSTALLATION) (Fig. 37).

(3) Connect electrical connector (1) to the switch (2) (Fig. 37).

(4) Check power steering fluid and add as necessary (Refer to 19 - STEERING/PUMP - STANDARD PROCEDURE).

(5) Start engine and again check power steering fluid. Add fluid if necessary.

PULLEY

REMOVAL

DIESEL

(1) Remove the engine cooling fan.

(2) Remove the fan shroud.

(3) Remove the serpentine drive belt.

(4) Remove the three bolts securing the pulley to the pump (Fig. 38).

GAS

CAUTION: On vehicles equipped with the 2.4L, Do not reuse the old power steering pump pulley it is not intended for reuse. A new pulley must be installed if removed.

(1) Remove pump assembly. (Refer to 19 - STEERING/PUMP - REMOVAL).

(2) Remove pulley (1) from pump with Puller C-4333 (2) or equivalent puller (Fig. 39).

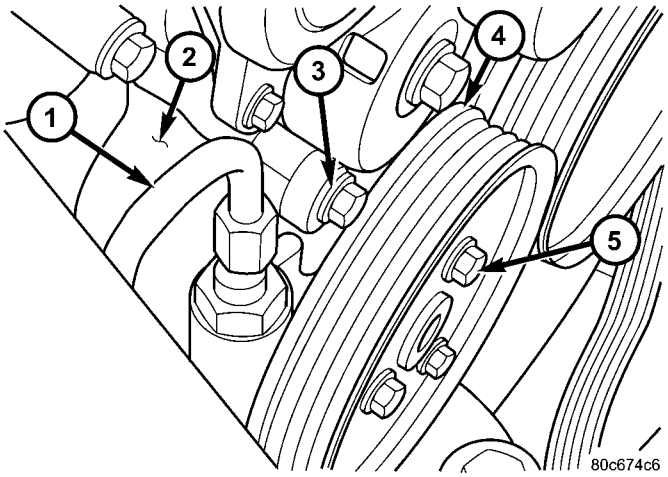

Fig. 38 POWER STEERING PUMP - DIESEL

1 - HIGH PRESSURE HOSE
2 - POWER STEERING PUMP
3 - POWER STEERING PUMP MOUNTING BOLT
4 - POWER STEERING PUMP PULLEY
5 - POWER STEERING PUMP PULLEY MOUNTING BOLTS

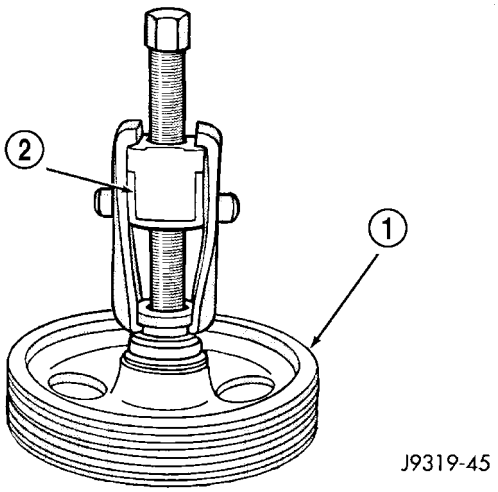

Fig. 39 Pulley Removal

1 - POWER STEERING PUMP DRIVE PULLEY
2 - SPECIAL TOOL C-4333

PULLEY (Continued)

INSTALLATION

DIESEL

(1) Install the pulley to the pump shaft.
(2) Install the three bolt securing the pulley to the pump (Fig. 40).
(3) Install the serpentine belt.
(4) Install the fan shroud.
(5) Install the engine cooling fan.

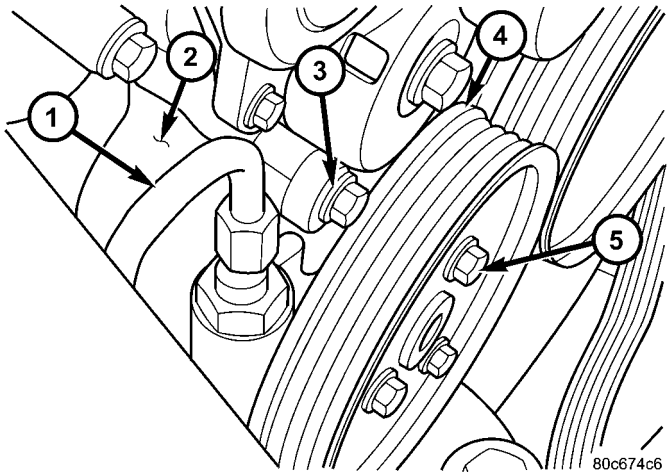

Fig. 40 POWER STEERING PUMP - DIESEL

1 - HIGH PRESSURE HOSE
2 - POWER STEERING PUMP
3 - POWER STEERING PUMP MOUNTING BOLT
4 - POWER STEERING PUMP PULLEY
5 - POWER STEERING PUMP PULLEY MOUNTING BOLTS

GAS

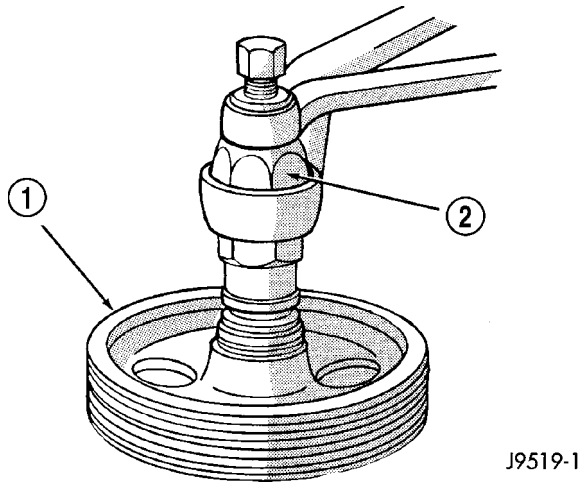

Fig. 41 Pulley Installation

1 - POWER STEERING PUMP DRIVE PULLEY
2 - SPECIAL TOOL C-4063–B

NOTE: The pulley is marked front for installation.

(1) Replace pulley if bent, cracked, or loose.

(2) Install pulley (1) on pump with Installer C-4063-B (2) or equivalent installer (Fig. 41). The pulley must be flush with the end of the shaft. Ensure the tool and pulley are aligned with the pump shaft.

(3) Install pump assembly. (Refer to 19 - STEERING/PUMP - INSTALLATION)

(4) With Serpentine Belt, run engine until warm (5 min.) and note any belt chirp. If chirp exists, move pulley outward approximately 0.5 mm (0.020 in.). If noise increases, press on 1.0 mm (0.040 in.). **Be careful that pulley does not contact mounting bolts.**

RESERVOIR

REMOVAL

DIESEL

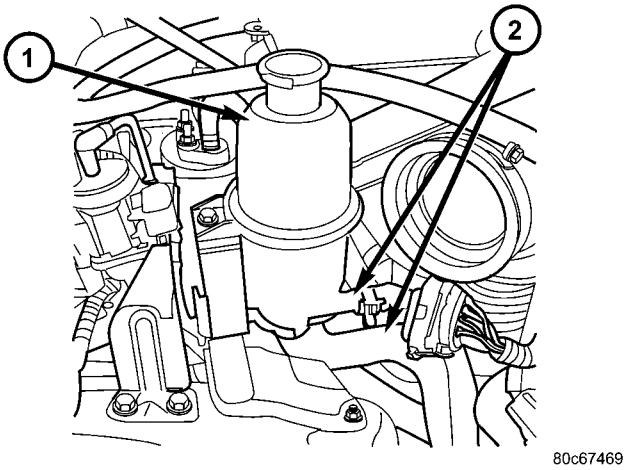

Fig. 42 RESERVOIR

1 - FLUID RESERVOIR
2 - RETURN HOSES

(1) Siphon out as much power steering fluid as possible.
(2) Remove the power steering hoses (2).
(3) Remove the bolt securing the reservoir (1) to the mounting bracket. (Fig. 42)
(4) Remove the reservoir (1).

RESERVOIR (Continued)

3.7L

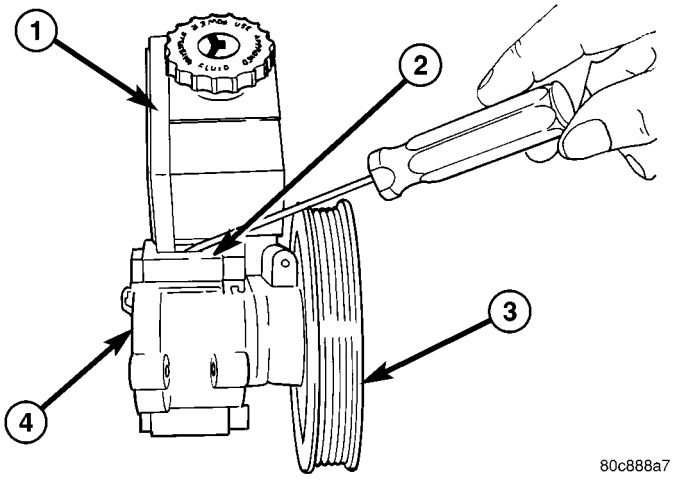

Fig. 43 FLUID RESERVOIR

1 - FLUID RESERVOIR
2 - RETAINING CLIP
3 - PULLEY
4 - PUMP BODY

(1) Remove the power steering pump. (Refer to 19 - STEERING/PUMP - REMOVAL).

(2) Secure the pump in a holding fixture.

(3) Remove the retaining clips (2) by prying the lock tab upwards and tap the retaining clips (2) off the pump body (4). (Fig. 43)

(4) Remove the reservoir (1) from the pump body (4).

2.4L

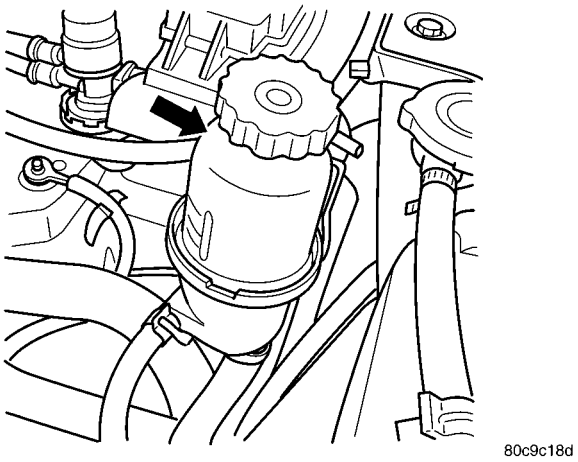

Fig. 44 FLUID RESERVOIR - 2.4L

(1) Siphon out as much power steering fluid as possible.

(2) Remove the power steering hoses.

(3) Remove the bolt securing the reservoir to the mounting bracket. (Fig. 44)

(4) Remove the reservoir.

INSTALLATION

DIESEL

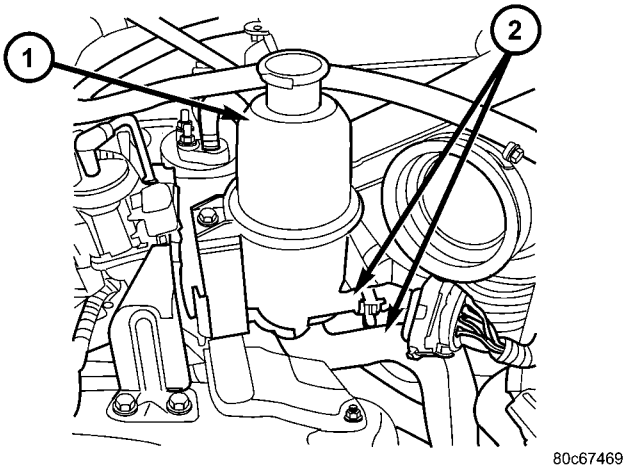

Fig. 45 RESERVOIR

1 - FLUID RESERVOIR
2 - RETURN HOSES

(1) Install the reservoir (1) to the mounting bracket.

(2) Install and tighten the bolt to 12 N·m (9 ft. lbs.).

(3) Install the hoses (2) (Fig. 45).

(4) Refill the power steering fluid and check for leaks (Refer to 19 - STEERING/PUMP - STANDARD PROCEDURE).

3.7L

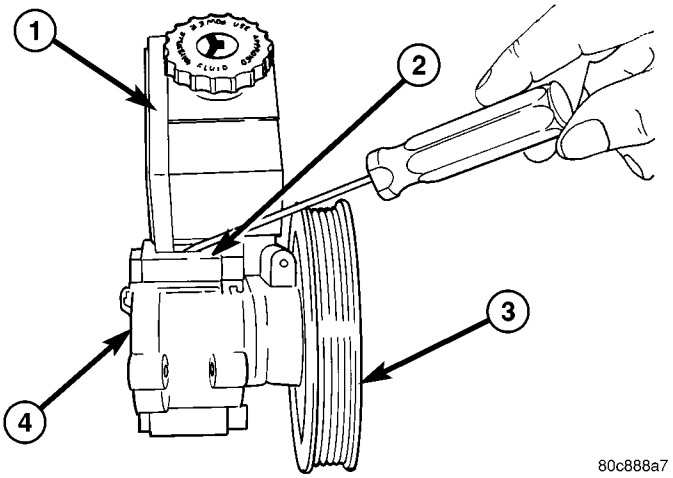

Fig. 46 FLUID RESERVOIR

1 - FLUID RESERVOIR
2 - RETAINING CLIP
3 - PULLEY
4 - PUMP BODY

(1) Install the reservoir (1) to the pump body (4).

RESERVOIR (Continued)

(2) Install the retaining clips (2) to the pump (4) and reservoir (1) (Fig. 46).

(3) Install the pump to the engine. (Refer to 19 - STEERING/PUMP - INSTALLATION).

(4) Refill the power steering fluid and check for leaks (Refer to 19 - STEERING/PUMP - STANDARD PROCEDURE).

2.4L

(1) Install the reservoir to the mounting bracket.

(2) Install and tighten the bolt to

(3) Install the hoses.

(4) Refill the power steering fluid and check for leaks (Refer to 19 - STEERING/PUMP - STANDARD PROCEDURE). (Fig. 47).

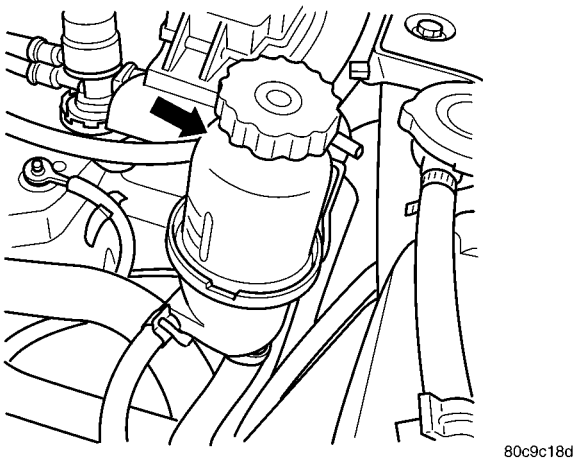

Fig. 47 FLUID RESERVOIR - 2.4L

TRANSMISSION AND TRANSFER CASE

TABLE OF CONTENTS

	page
MANUAL TRANSMISSION - NSG370	1
AUTOMATIC TRANSMISSION - 42RLE	38
AUTOMATIC TRANSMISSION - 545RFE	168
TRANSFER CASE - NV231	282
TRANSFER CASE - NV241 GENII	315
TRANSFER CASE - NV242	347

MANUAL TRANSMISSION - NSG370

TABLE OF CONTENTS

	page
MANUAL TRANSMISSION - NSG370	
DIAGNOSIS AND TESTING MANUAL TRANSMISSION - NSG370	1
STANDARD PROCEDURE - DRAIN AND FILL	2
REMOVAL	2
DISASSEMBLY	4
CLEANING	15
INSPECTION	15
ASSEMBLY	17
INSTALLATION	32
SPECIFICATIONS - NSG370	35
SPECIAL TOOLS	35

MANUAL TRANSMISSION - NSG370

DIAGNOSIS AND TESTING

MANUAL TRANSMISSION - NSG370

LOW LUBRICANT LEVEL

A low transmission lubricant level is generally the result of a leak, inadequate lubricant fill or incorrect lubricant level check.

Rear transmission leaks will be from the oil seals or component mating surfaces.

Front transmission leaks will be from the front input shaft retainer seal. Lubricant may drip from the clutch housing after extended operation. If leak is severe, it may contaminate the clutch disc.

Lubricant level check can only be made when the vehicle is level and allowing the lubricant to settle for a minute before checking. This will ensure an accurate check and avoid an underfill or overfill condition.

HARD SHIFTING

Hard shifting is usually caused by low lubricant level, improper or contaminated lubricants. This will cause noise, excessive wear, internal bind, and hard shifting. Substantial lubricant leaks can result in gear, shift rail, synchro, and bearing damage. The first indications of component damage is usually hard shifting and noise.

Shift component damage, clutch adjustment, worn pressure plate or disc are also causes of increased shift effort. If clutch problem is advanced, gear clash during shifts can result. Worn or damaged synchronizer rings can cause gear clash when shifting into any forward gear. In some new or rebuilt transmissions, new synchro rings may tend to stick slightly causing hard or noisy shifts. In most cases, this condition will decline as the rings wear-in.

TRANSMISSION NOISE

Most manual transmissions make some noise during normal operation. Rotating gears generate a mild whine that is audible, but generally only at extreme speeds.

Severe, highly audible transmission noise is generally the initial indicator of a lubricant problem. Insufficient, improper or contaminated lubricant will promote rapid wear of gears, synchros, shift rails, forks and bearings. The overheating caused by a lubricant problem, can also lead to gear and bearing damage.

MANUAL TRANSMISSION - NSG370 (Continued)

STANDARD PROCEDURE - DRAIN AND FILL

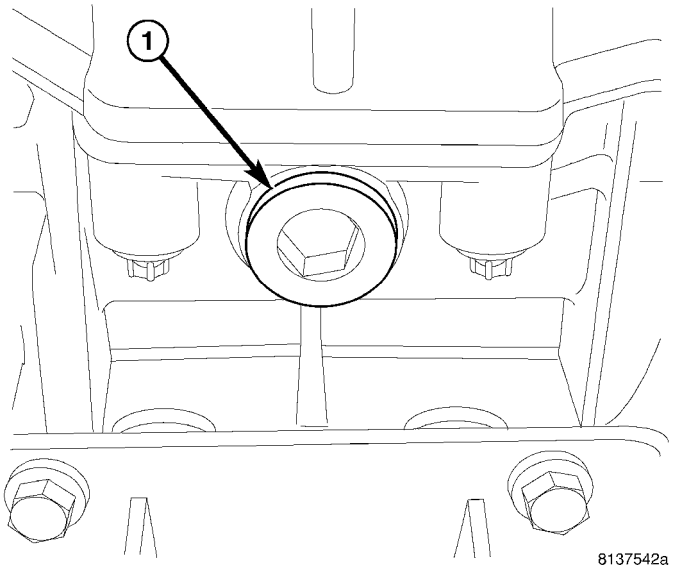

Fig. 1 DRAIN PLUG

1 - DRAIN PLUG

(1) With vehicle in neutral, position vehicle on hoist.

(2) Remove drain plug (1) (Fig. 1) and drain fluid.

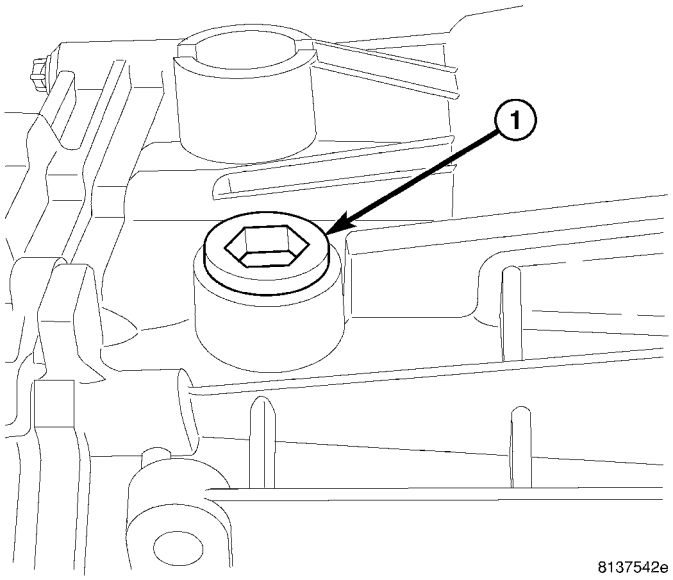

Fig. 2 FILL PLUG

1 - FILL PLUG

(3) Install drain plug and remove fill plug (1) (Fig. 2).

(4) Fill transmission with 1.5L (3.17 pts.) of Mopar® Manual Transmission Lubricant MS-9224 or to the bottom of the fill plug (1) hole.

REMOVAL

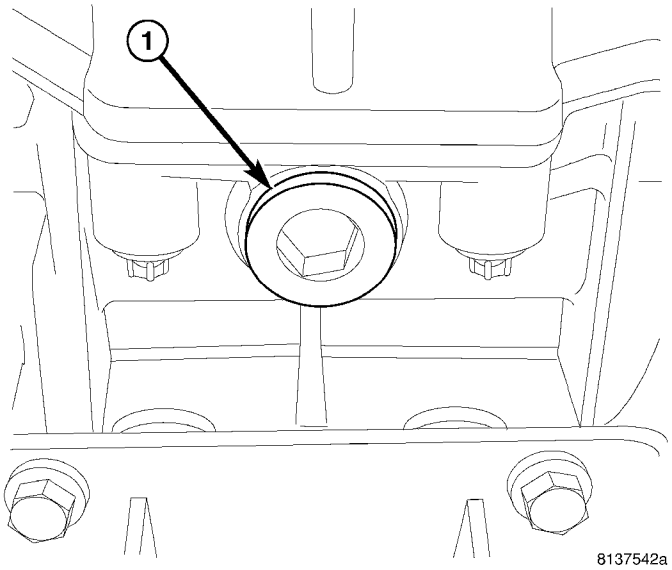

Fig. 3 DRAIN PLUG

1 - DRAIN PLUG

(1) Disconnect negative battery cable.

(2) With vehicle in neutral, position vehicle on hoist.

(3) Remove drain plug (1) (Fig. 3) and drain fluid.

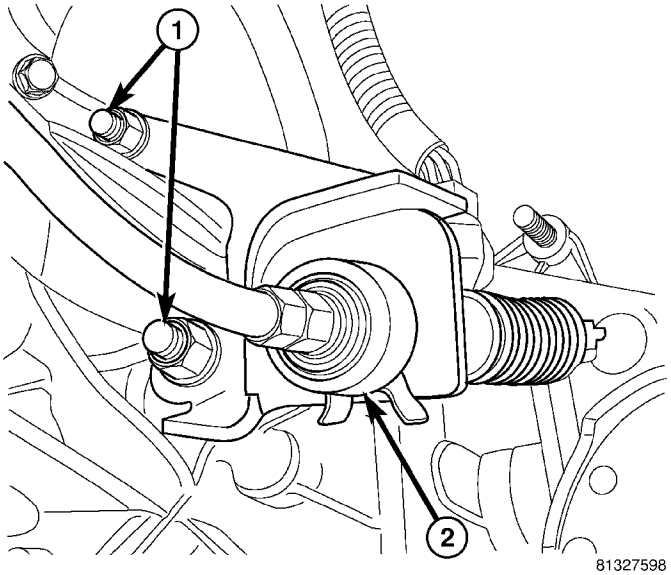

Fig. 4 TRANSFER CASE CABLE

1 - BRACKET NUTS
2 - CABLE

(4) Mark installation reference marks on propeller shaft/shafts and remove shafts.

(5) Remove transfer case shift cable bracket nuts (1) (Fig. 4), cable (2), wiring connector, and vent hose, if equipped.

(6) Remove transfer case, if equipped.

MANUAL TRANSMISSION - NSG370 (Continued)

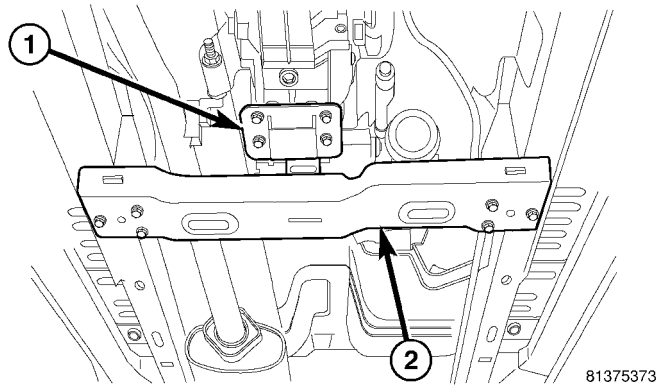

Fig. 5 TRANSMISSION MOUNT

1 - TRANSMISSION MOUNT
2 - CROSSMEMBER

(7) Support transmission with jack.

(8) Remove transmission mount (1) (Fig. 5) and crossmember (2).

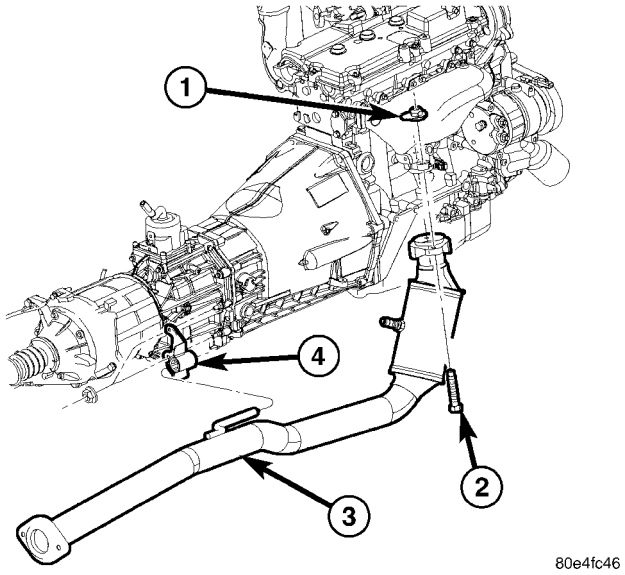

Fig. 6 2.4L CATALYST ASSEMBLY - 4x4

1- FLANGED NUT
2- CATALYST ASSEMBLY
3- BOLT
4- HANGER
5- NUT

(9) On 2.4L engine remove catalyst assembly (2) (Fig. 6).

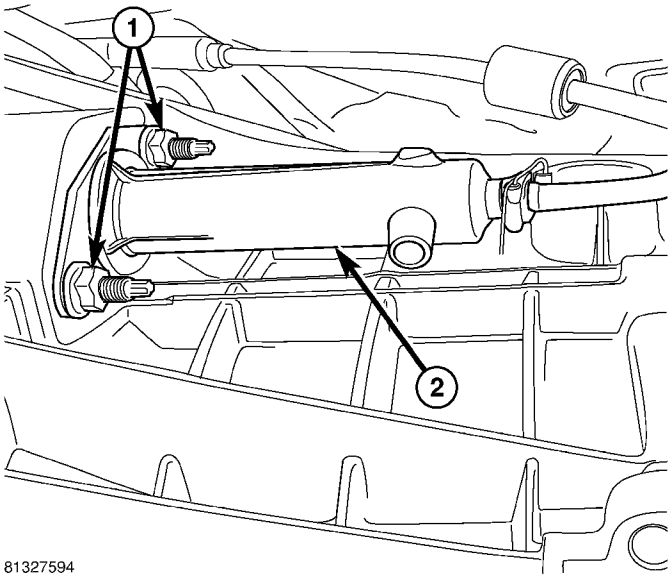

Fig. 7 CLUTCH SLAVE CYLINDER

1 - CLUTCH SLAVE CYLINDER NUTS
2 - CLUTCH SLAVE CYLINDER

(10) Remove clutch slave cylinder nuts (1) (Fig. 7) and remove cylinder (2).

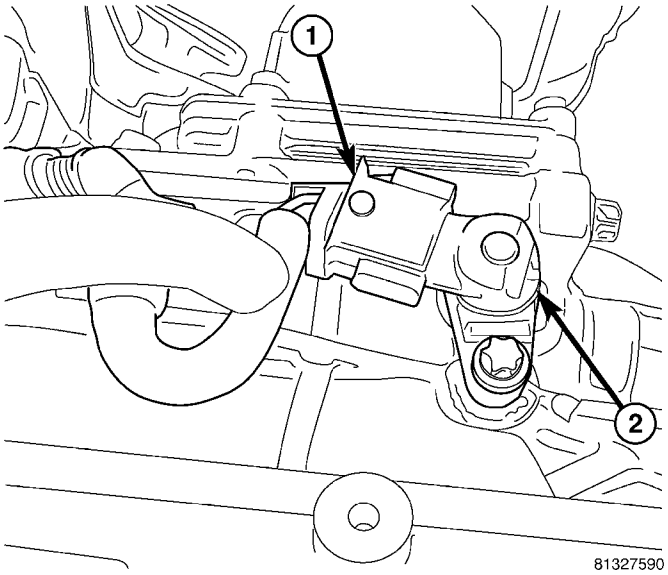

Fig. 8 BACKUP LAMP SWITCH

1 - BACKUP LAMP SWITCH
2 - WIRING CONNECTOR

(11) Remove backup lamp switch (1) (Fig. 8) wiring connector (2).

MANUAL TRANSMISSION - NSG370 (Continued)

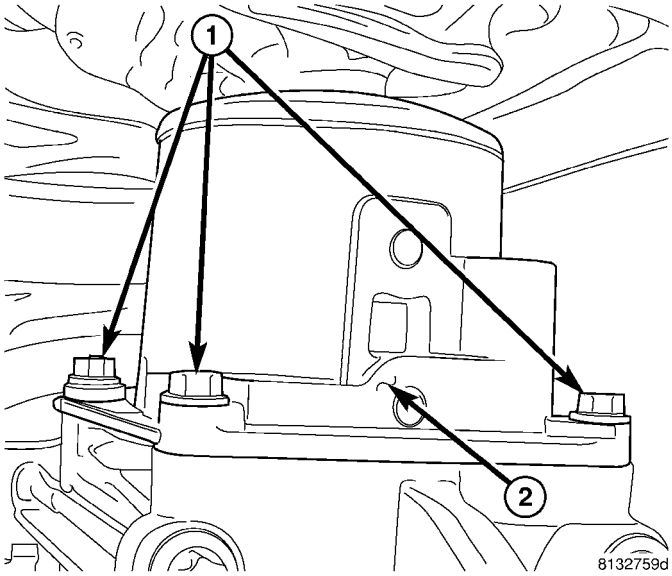

Fig. 9 SHIFT LEVER

1 - SHIFT LEVER TOWER BOLTS
2 - SHIFT LEVER HOUSING

(12) Remove shift lever tower bolts (1) (Fig. 9) and remove shift lever housing (2).

(13) Remove starter bolts and remove starter.

(14) Remove transmission bolt and remove transmission.

DISASSEMBLY

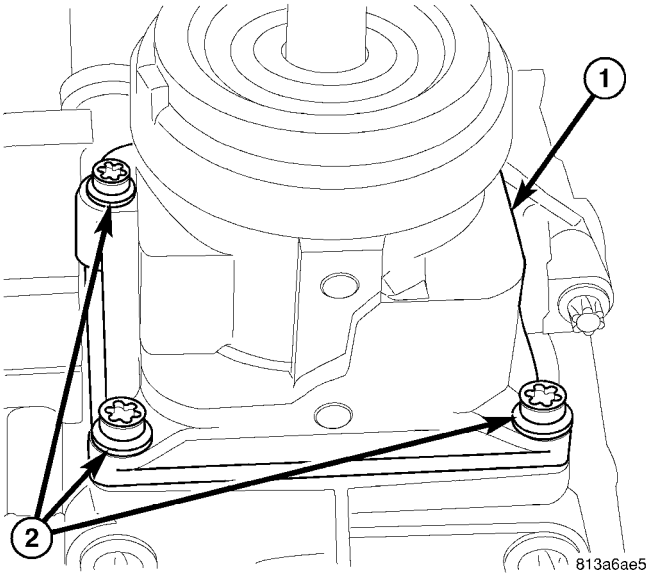

Fig. 10 SHIFT TOWER

1 - SHIFT TOWER
2 - BOLTS

(1) Remove shift tower (1) (Fig. 10) bolts (2) and remove tower.

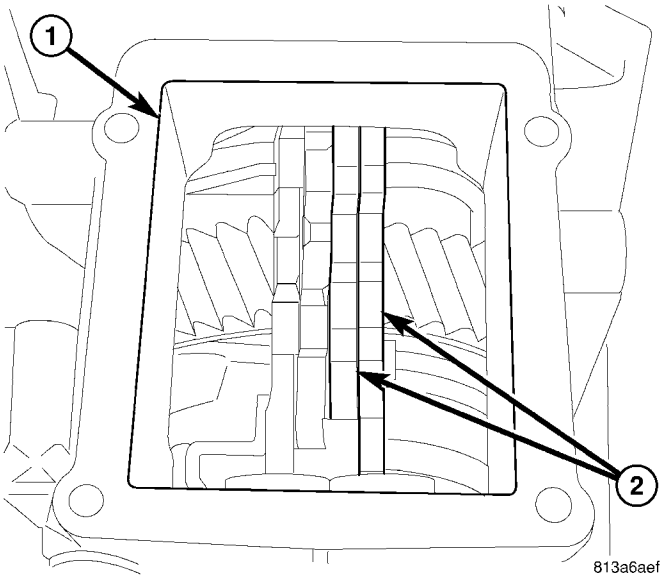

Fig. 11 SHIFT TOWER OPENING

1 - SHIFT TOWER OPENING
2 - SHIFT RAILS

(2) Through shift tower opening (1) (Fig. 11) shift two shift rails (2) forward to engage two gears.

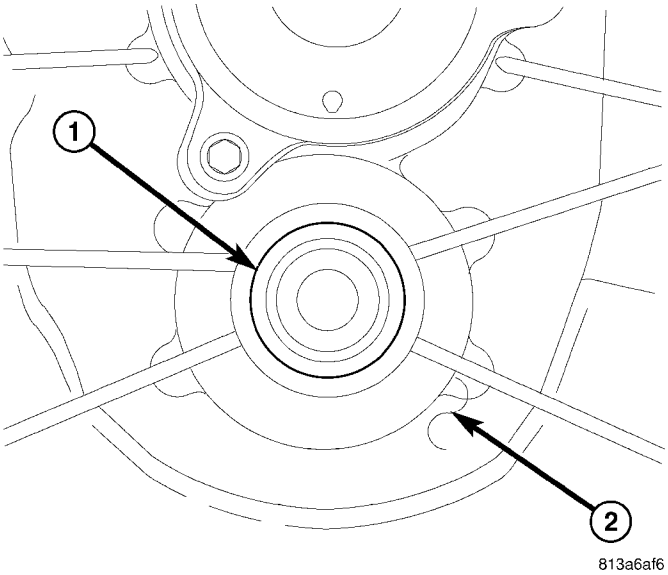

Fig. 12 COUNTERSHAFT PLUG

1 - COUNTERSHAFT PLUG
2 - FRONT HOUSING

(3) Remove countershaft plug (1) (Fig. 12) from the front housing (2) with a seal pick.

MANUAL TRANSMISSION - NSG370 (Continued)

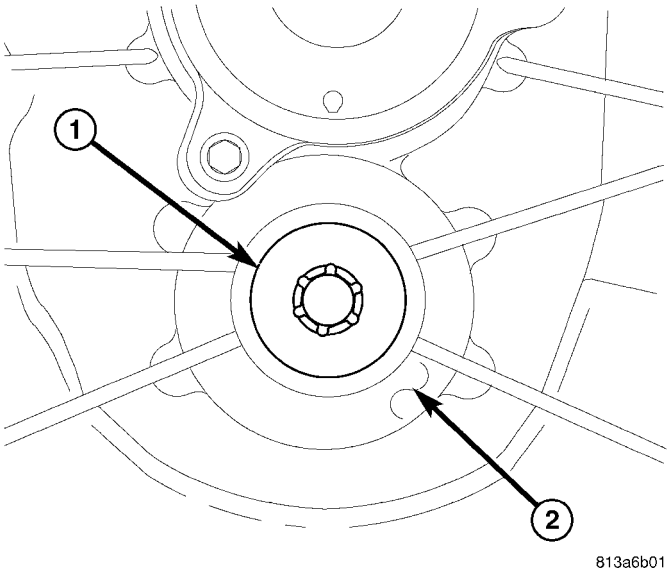

Fig. 13 COUNTERSHAFT BOLT

1 - COUNTERSHAFT BOLT
2 - FRONT HOUSING

(4) Remove countershaft bolt (1) (Fig. 13) from the front housing (2).

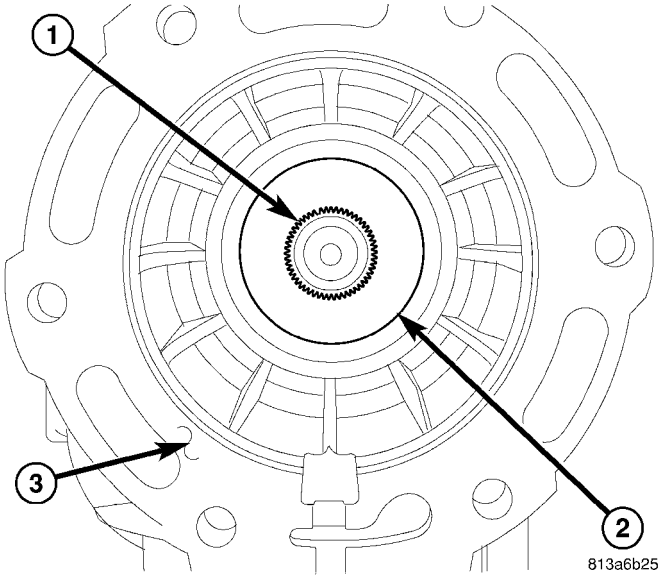

Fig. 14 OUTPUT SHAFT SEAL

1 - OUTPUT SHAFT
2 - SEAL
3 - REAR HOUSING

(5) Remove output shaft (1) (Fig. 14) seal (2) from rear housing (3) with a seal pick.

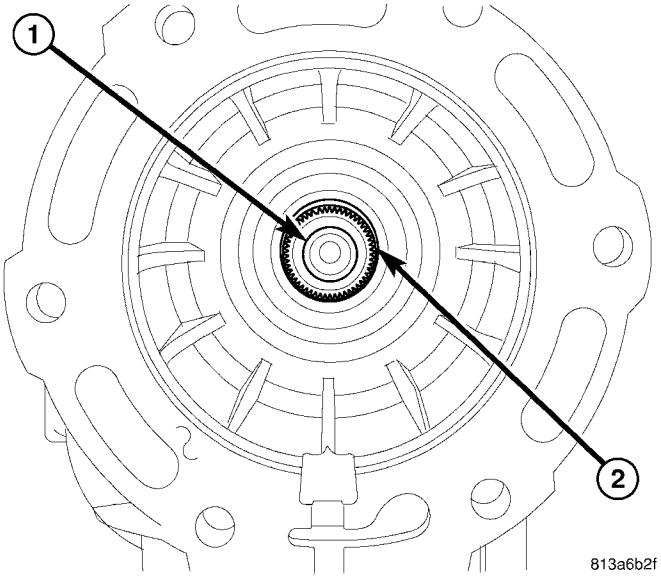

Fig. 15 OUTPUT SHAFT SNAP RING

1 - OUTPUT SHAFT
2 - SNAP RING

(6) Remove output shaft (1) (Fig. 15) snap ring (2) 4x4 only.

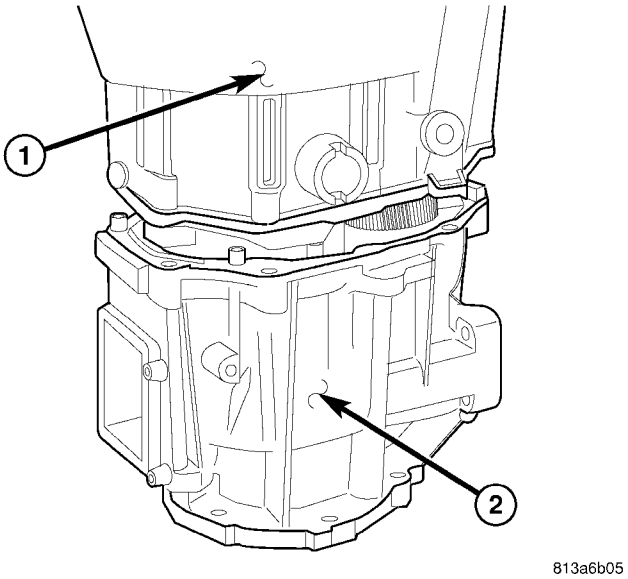

Fig. 16 SPLIT HOUSING

1 - FRONT HOUSING
2 - REAR HOUSING

(7) Stand transmission on the rear housing and remove the housing bolts.

(8) Remove front housing (1) (Fig. 16) from the rear housing (2).

MANUAL TRANSMISSION - NSG370 (Continued)

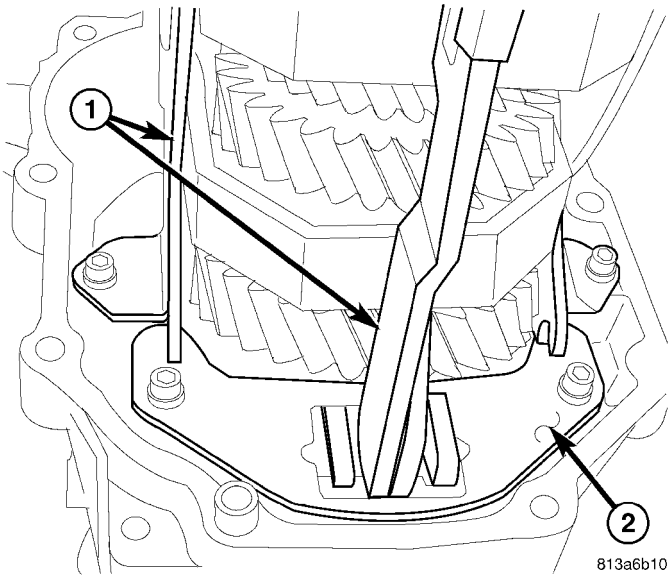

Fig. 17 SHIFT RAIL SUPPORT PLATE

1 - SHIFT RAILS
2 - SUPPORT PLATE

(9) Remove shift rails (1) (Fig. 17) support plate (2) bolts.

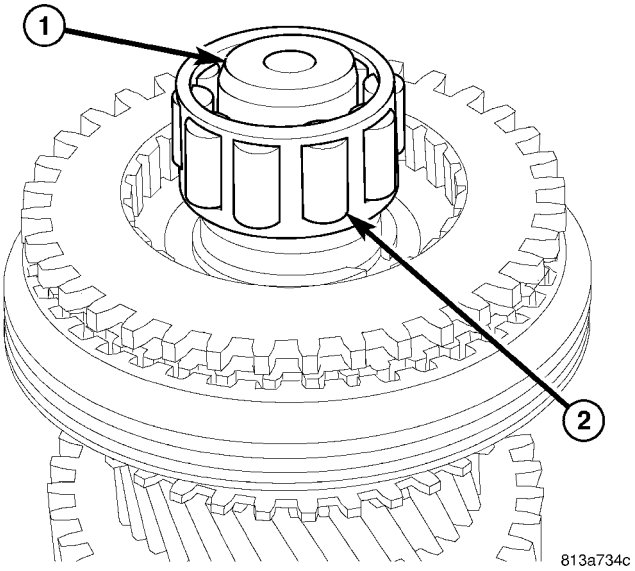

Fig. 18 INPUT SHAFT ROLLER BEARING

1 - INPUT SHAFT
2 - ROLLER BEARING

(10) Remove input shaft (1) (Fig. 18) roller bearing (2).

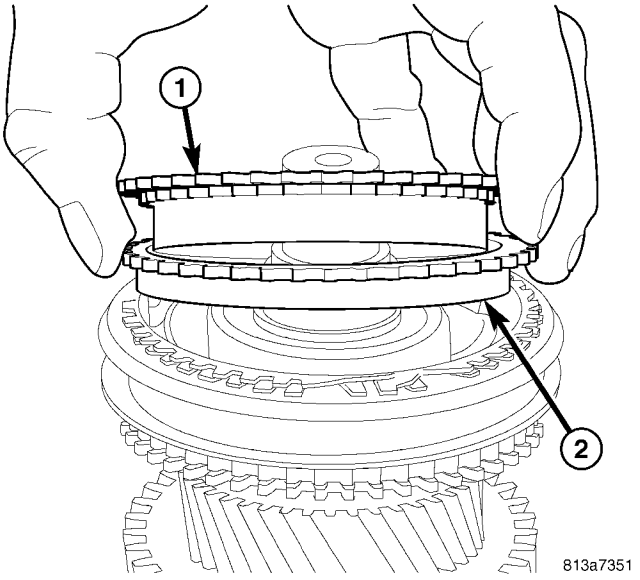

Fig. 19 FIFTH GEAR SYNCHRO

1 - FIFTH GEAR BLOCKER RING
2 - FRICTION RING

(11) Remove fifth gear synchronizer blocker ring (1) (Fig. 19) and friction ring (2).

(12) Set geartrain and shift rails with rear housing into Build Fixture 9633.

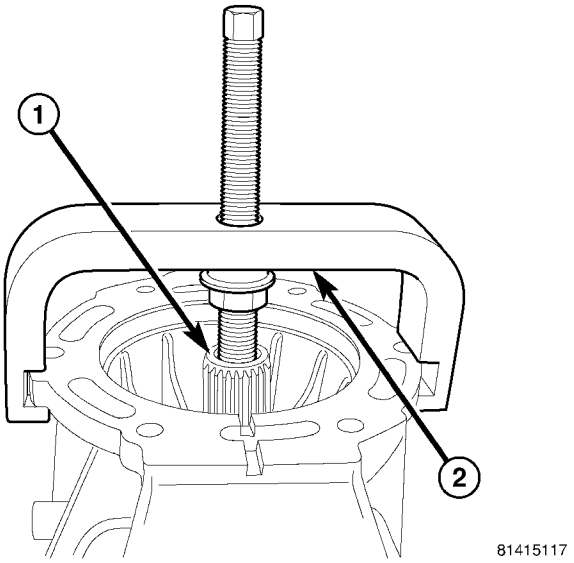

Fig. 20 MAINSHAFT REMOVER

1 - MAINSHAFT
2 - REMOVER/INSTALLER

(13) Remove mainshaft shaft (1) (Fig. 20) from rear housing bearing with Remover 9637 (2).

MANUAL TRANSMISSION - NSG370 (Continued)

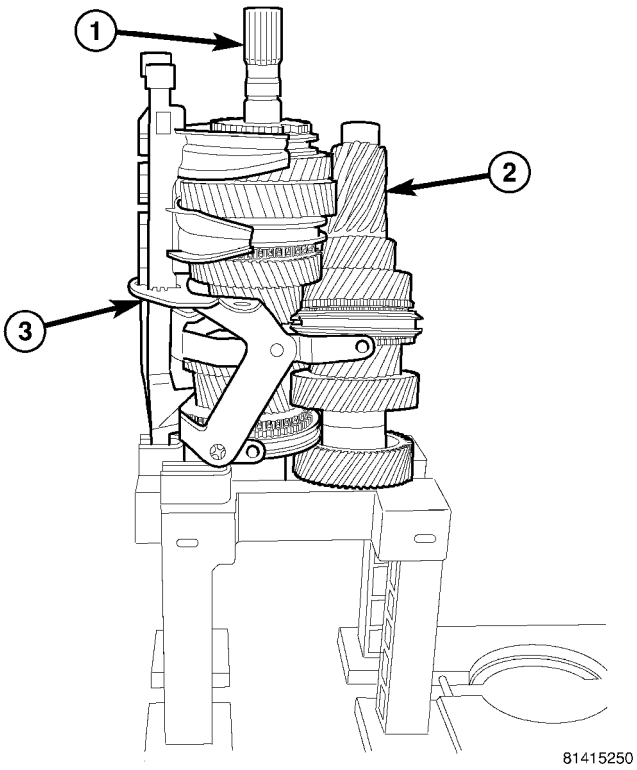

Fig. 21 MAIN/COUNTERSHAFT

1 - MAINSHAFT
2 - COUNTERSHAFT
3 - SHIFT RAILS AND FORKS

(14) Remove mainshaft (1), countershaft (2) and shift rails/forks (3) from fixture (Fig. 21).

MAINSHAFT

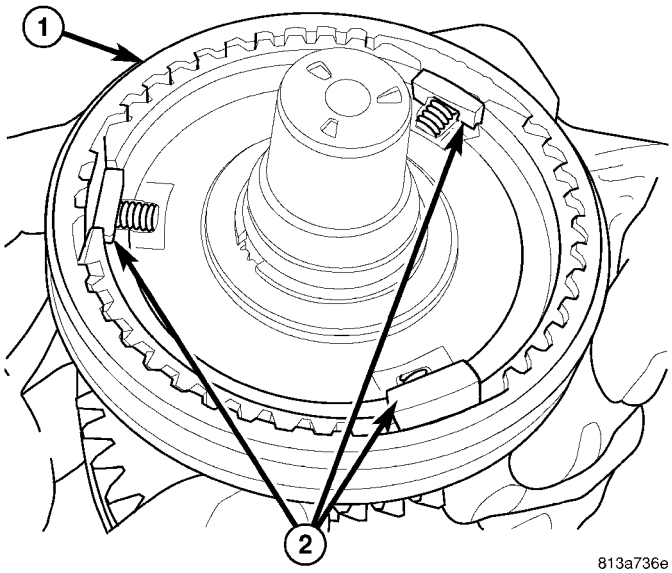

Fig. 22 5-6 SYNCHRO SLEEVE DETENTS

1 - SYNCHRONIZER SLEEVE
2 - DETENTS

(1) Place mainshaft with 5-6 synchronizer facing up in build Fixture 9648 and place in a vise.

(2) Push 5-6 synchronizer sleeve (1) (Fig. 22) down on hub and remove detents (2) springs and balls.

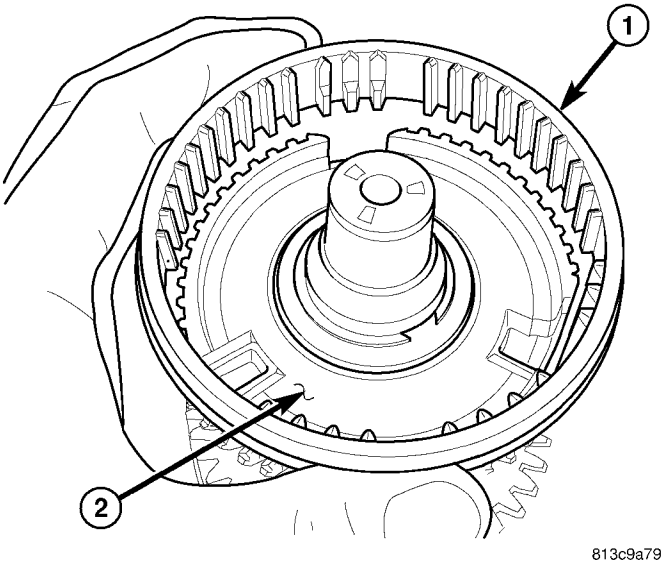

Fig. 23 5-6 SYNCHRONIZER SLEEVE

1 - SYNCHRONIZER SLEEVE
2 - HUB

(3) Remove 5-6 synchronizer sleeve (1) (Fig. 23) from hub (2).

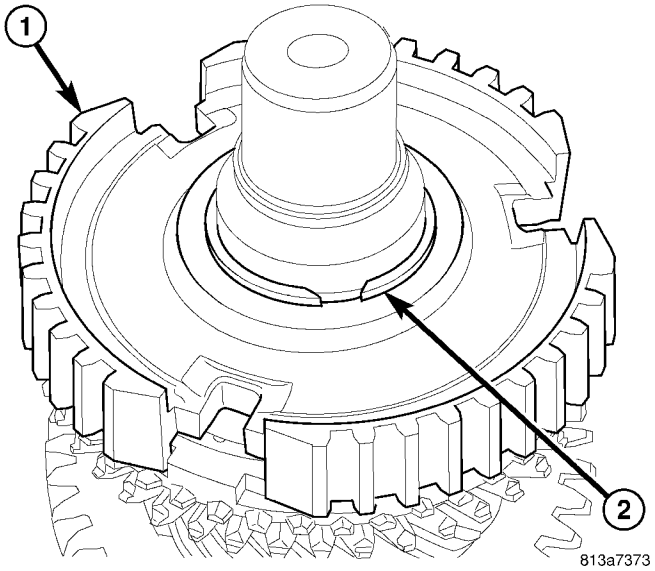

Fig. 24 5-6 SYNCHRO HUB SNAP RING

1 - SYNCHRONIZER HUB
2 - SNAP RING

(4) Remove 5-6 synchronizer hub (1) (Fig. 24) snap ring (2).

MANUAL TRANSMISSION - NSG370 (Continued)

NOTE: All snap rings are select fit from the factory.

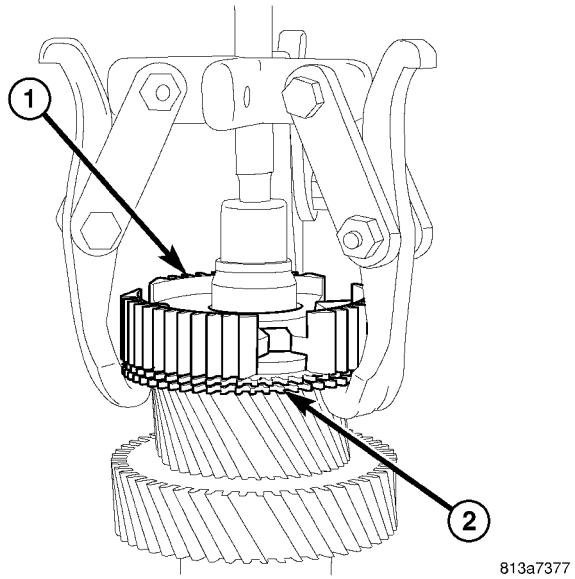

Fig. 25 5-6 SYNCHRO HUB

1 - 5-6 SYNCHRONIZER HUB
2 - SIXTH GEAR SYNCHRONIZER RINGS

(5) Remove 5-6 synchronizer hub (1) (Fig. 25) and sixth gear synchronizer rings (2) with a three jaw puller. Place puller jaws under sixth gear synchronizer rings (2).

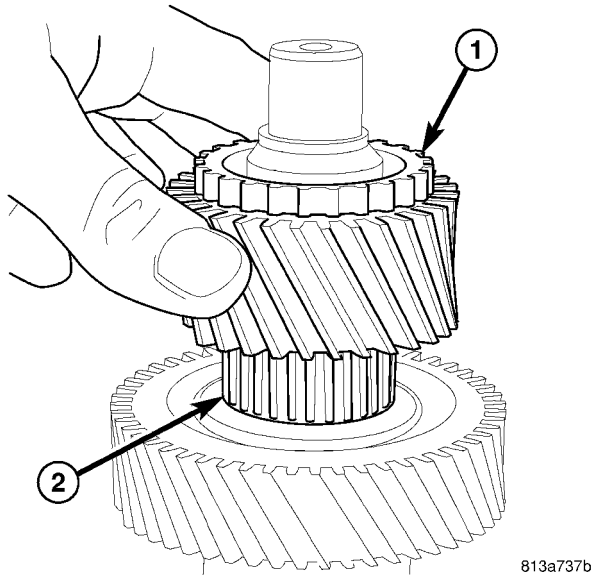

Fig. 26 SIXTH GEAR & BEARING

1 - SIXTH GEAR
2 - BEARING

(6) Remove sixth gear (1) (Fig. 26) and bearing (2).

(7) Third gear (1) (Fig. 27) and fourth gear (2) are serviced with the mainshaft only.

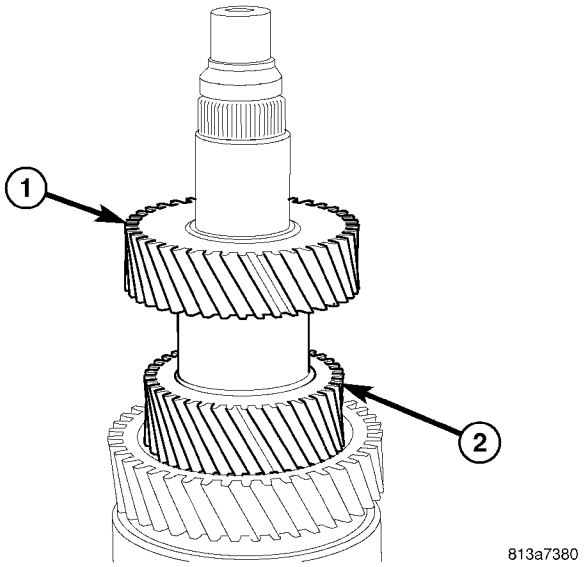

Fig. 27 3-4 GEAR

1 - THIRD GEAR
2 - FOURTH GEAR

(8) Remove mainshaft from Fixture 9648. Turn fixture over in vise and set opposite end of mainshaft in the fixture.

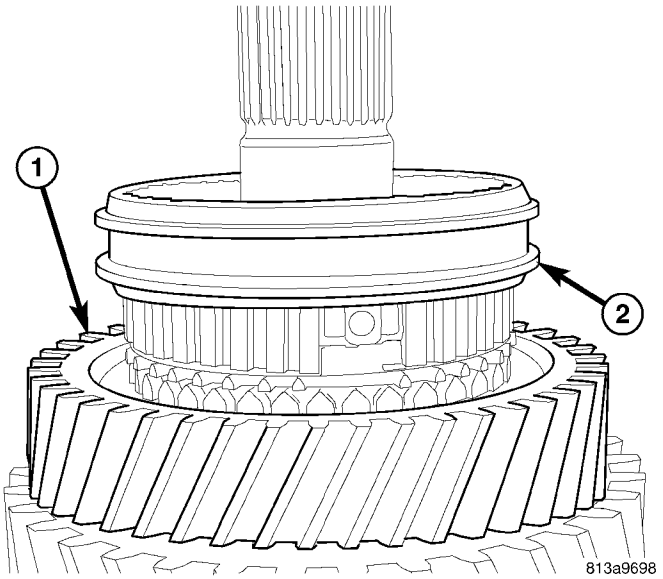

Fig. 28 REVERSE GEAR SYNCHRO SLEEVE

1 - REVERSE GEAR
2 - SYNCHRONIZER SLEEVE

(9) Remove reverse gear (1) (Fig. 28) synchronizer sleeve (2) off synchronizer hub.

MANUAL TRANSMISSION - NSG370 (Continued)

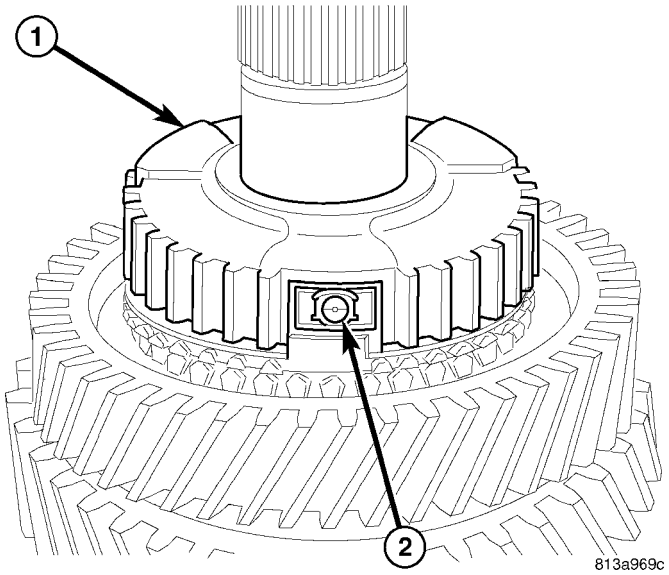

Fig. 29 REVERSE SYNCHRO HUB DETENT

1 - SYNCHRONIZER HUB
2 - DETENTS

(10) Remove reverse synchronizer hub (1) (Fig. 29) detents (2).

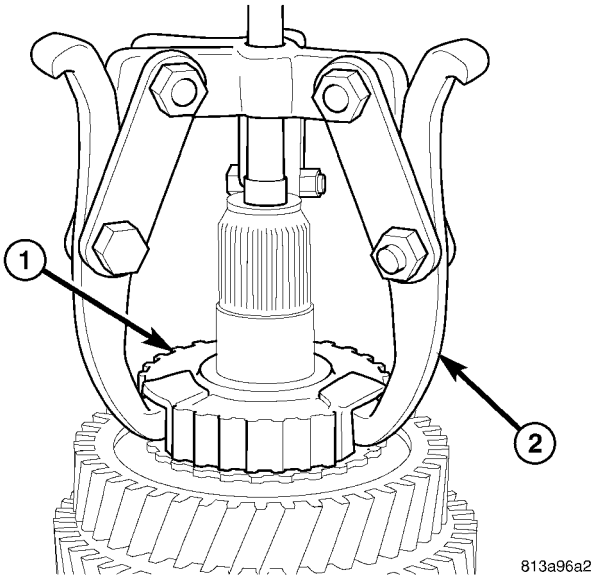

Fig. 30 REVERSE SYNCHRO HUB

1 - SYNCHRONIZER HUB
2 - THREE JAW PULLER

(11) Remove reverse synchronizer hub (1) (Fig. 30) with three jaw puller (2). Place puller jaws in hub detent openings.

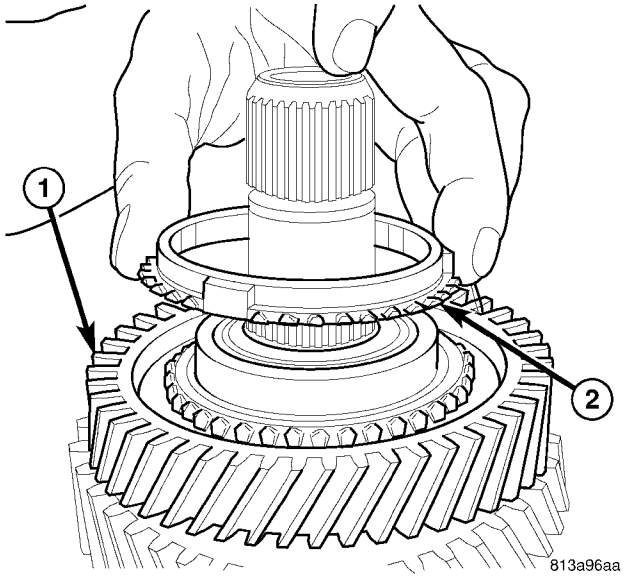

Fig. 31 REVERSE SYNCHRONIZER

1 - REVERSE GEAR
2 - SYNCHRONIZER FRICTION RING

(12) Remove reverse gear (1) (Fig. 31) synchronizer ring (2).

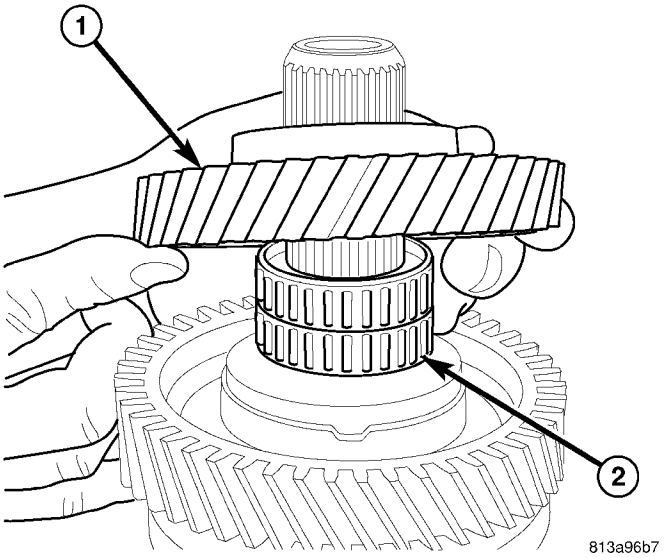

Fig. 32 REVERSE GEAR

1 - REVERSE GEAR
2 - BEARING

(13) Remove reverse gear (1) (Fig. 32) and bearing (2).

MANUAL TRANSMISSION - NSG370 (Continued)

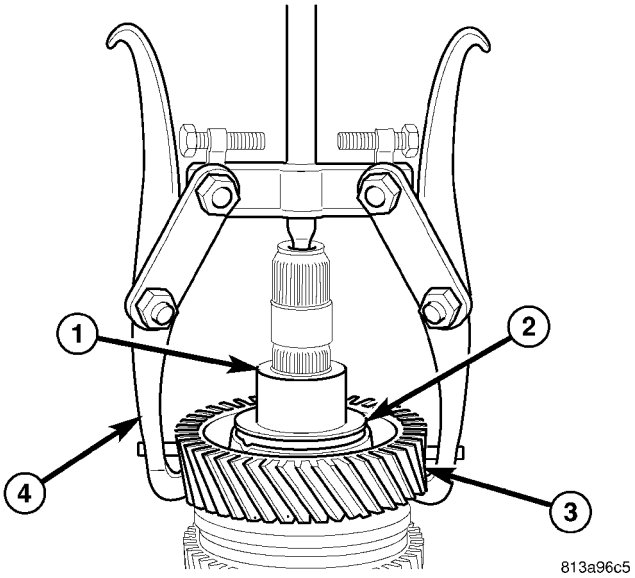

Fig. 33 FIRST GEAR

1 - BEARING RACE
2 - THRUST WASHER
3 - FIRST GEAR
4 - PULLER

(14) Remove reverse gear bearing race (1) (Fig. 33), thrust washer (2) and first gear (3) with puller (4). Place puller jaws under first gear (3).

(15) Remove first gear bearing.

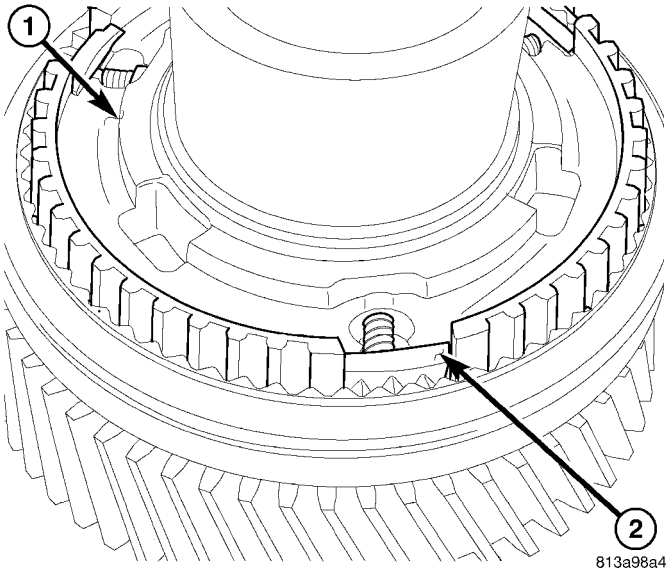

Fig. 34 1-2 SYNCHRO DETENT

1 - 1-2 SYNCHRONIZER HUB
2 - DETENTS

(16) Remove first gear synchronizer rings.

(17) Push 1-2 synchronizer sleeve down on hub. Remove 1-2 synchronizer hub (1) (Fig. 34) detents (2), balls and springs.

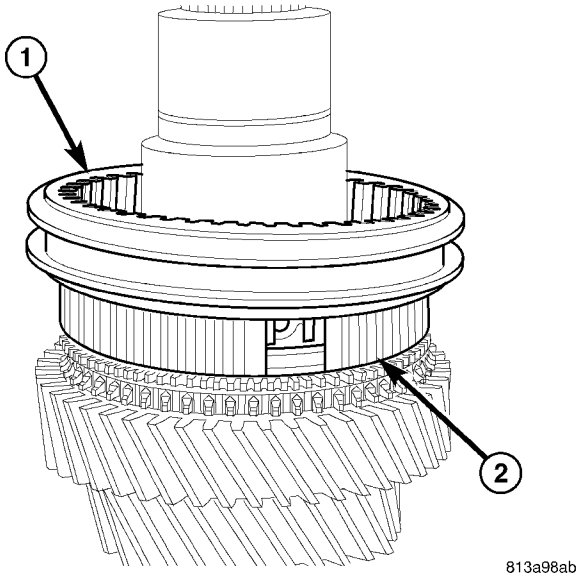

Fig. 35 1-2 SYNCHRO SLEEVE

1 - 1-2 SYNCHRONIZER SLEEVE
2 - SYNCHRONIZER HUB

(18) Remove 1-2 synchronizer sleeve (1) (Fig. 35) from synchronizer hub (2).

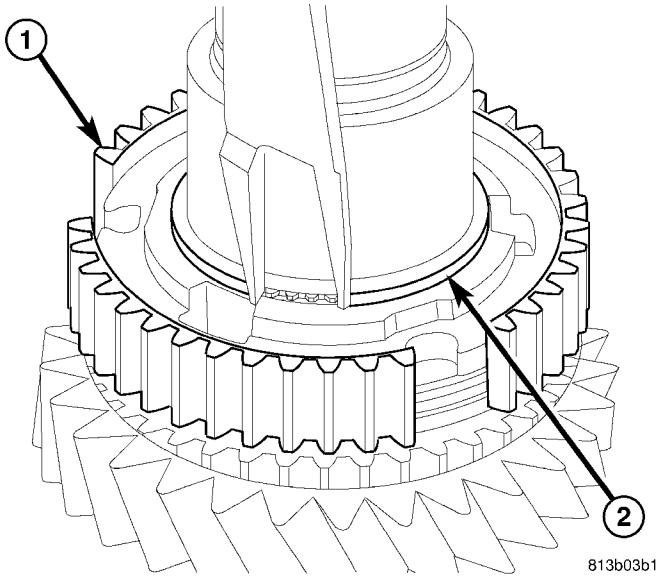

Fig. 36 1-2 SYNCHRO HUB SNAP RING

1 - SYNCHRONIZER HUB
2 - SNAP RING

(19) Remove 1-2 synchronizer hub (1) (Fig. 36) snap ring (2).

MANUAL TRANSMISSION - NSG370 (Continued)

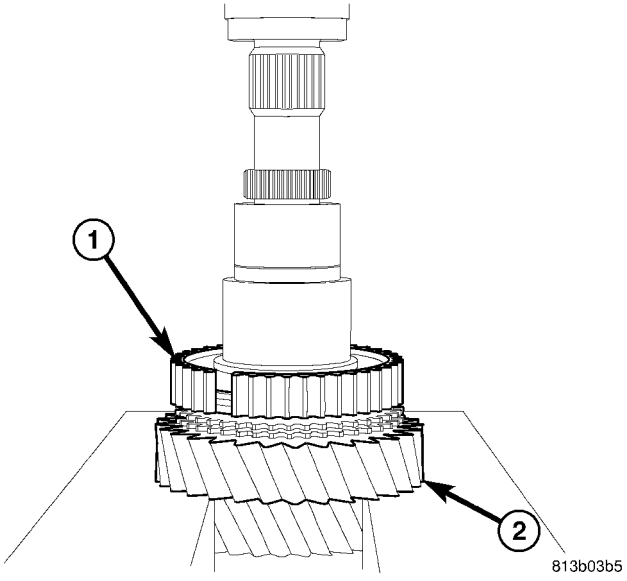

Fig. 37 SECOND GEAR

1 - SYNCHRONIZER HUB
2 - SECOND GEAR

(20) Remove 1-2 synchronizer hub (1) (Fig. 37), synchronizer rings and second gear (2) off shaft with a press. Place second gear (2) on press plates and press shaft through 1-2 synchronizer hub (1), synchronizer rings and second gear (2)

COUNTERSHAFT

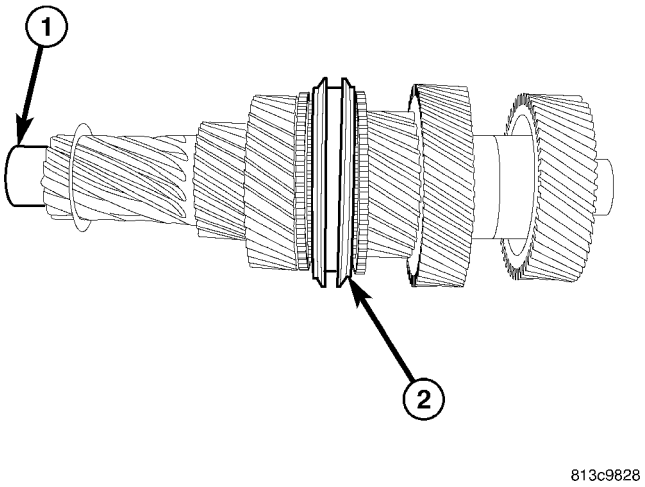

Fig. 38 COUNTERSHAFT

1 - BEARING SURFACES
2 - 3-4 SYNCHRONIZER ASSEMBLY

The countershaft (1) and 3-4 synchronizer (2) are serviced as an assembly only (Fig. 38).

FRONT HOUSING

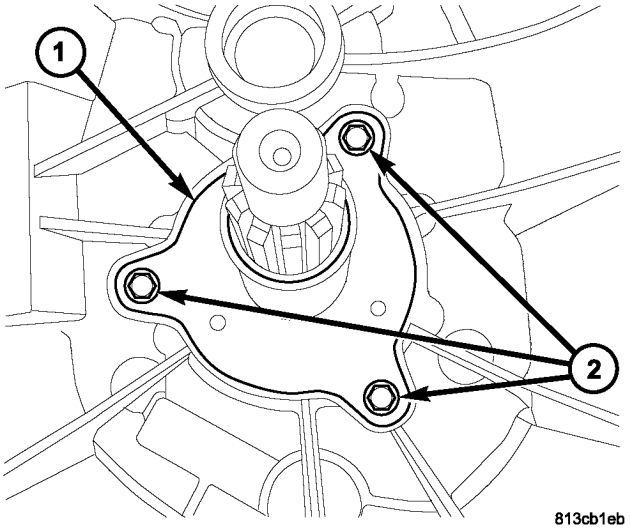

Fig. 39 INPUT SHAFT RETAINER

1 - INPUT SHAFT RETAINER
2 - BOLTS

(1) Remove input shaft retainer (1) (Fig. 39) bolts (2) and remove retainer.

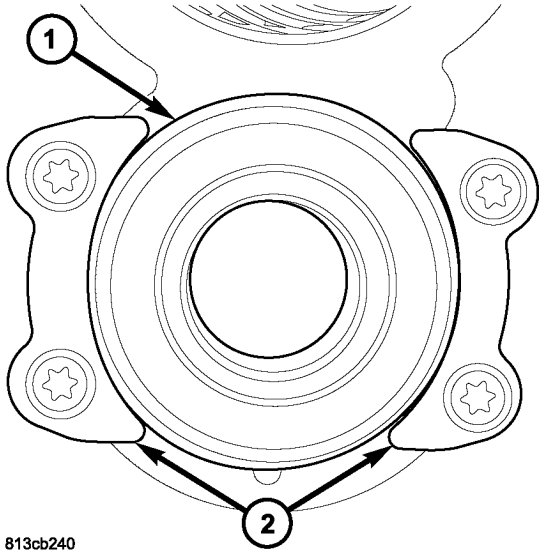

Fig. 40 COUNTERSHAFT BEARING RETAINER

1 - COUNTERSHAFT BEARING
2 - RETAINERS

(2) Remove countershaft bearing (1) (Fig. 40) retainer (2) bolts and remove retainers.

MANUAL TRANSMISSION - NSG370 (Continued)

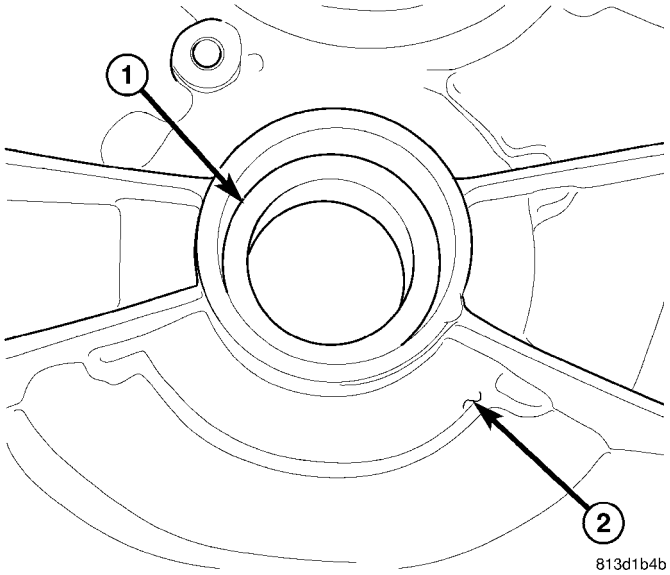

Fig. 41 COUNTERSHAFT BEARING FRONT HOUSING

1 - COUNTERSHAFT BEARING
2 - HOUSING

(3) Remove countershaft bearing (1) (Fig. 41) from housing (2) with a hammer and driver.

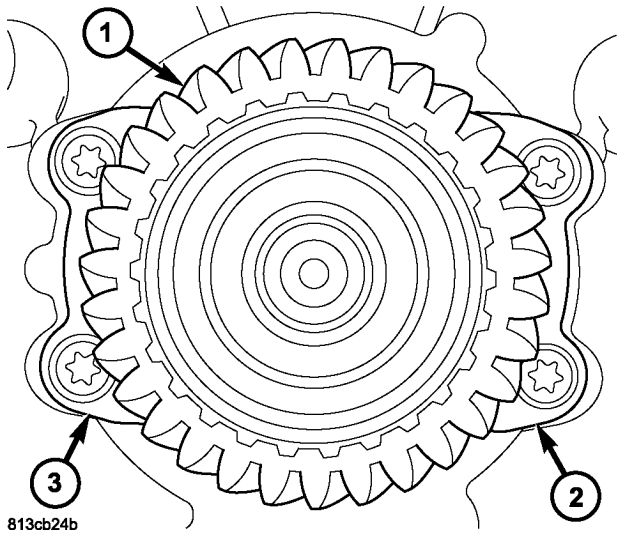

Fig. 42 INPUT SHAFT BEARING RETAINER

1 - INPUT SHAFT
2 - BEARING RETAINER
3 - BEARING RETAINER

(4) Remove input shaft (1) (Fig. 42) bearing retainer (2) bolts and remove retainers.

(5) Remove input shaft and bearing from housing with a dead blow hammer.

(6) Remove input shaft seal (1) (Fig. 43) from housing (2) with a hammer and driver.

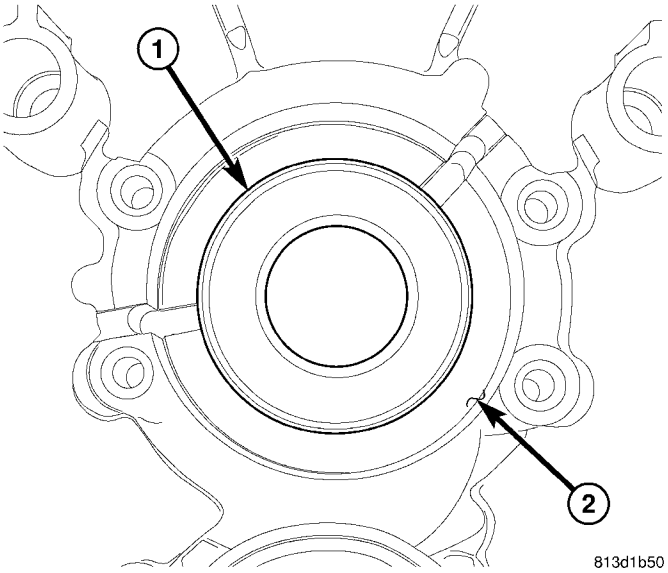

Fig. 43 INPUT SHAFT SEAL

1 - INPUT SHAFT SEAL
2 - HOUSING

INPUT SHAFT

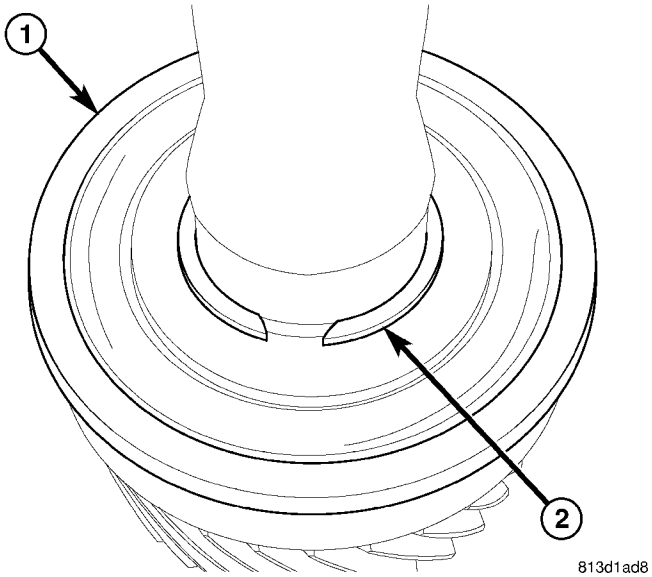

Fig. 44 INPUT SHAFT BEARING SNAP RING

1 - INPUT SHAFT BEARING
2 - SNAP RING

(1) Remove input shaft bearing (1) (Fig. 44) snap ring (2).

MANUAL TRANSMISSION - NSG370 (Continued)

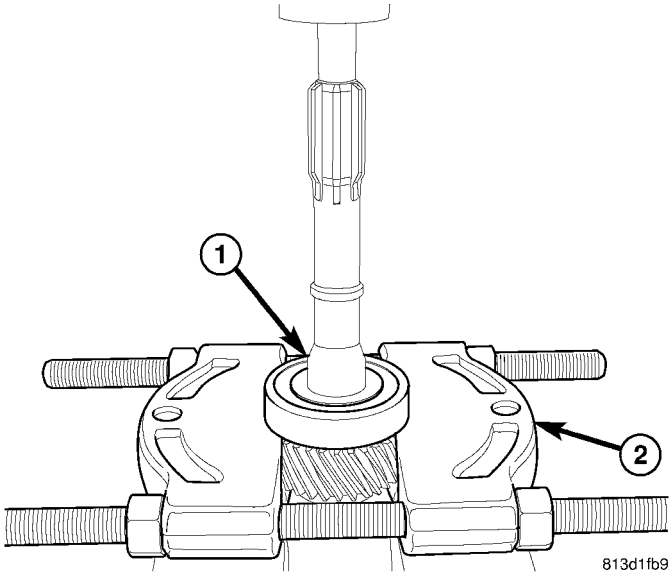

Fig. 45 INPUT SHAFT BEARING REMOVAL

1 - INPUT SHAFT BEARING
2 - BEARING SPLITTER 1130

(2) Remove input shaft bearing (1) (Fig. 45) with Splitter 1130 (2) and press. Place splitter around bearing retainer lip.

REAR HOUSING

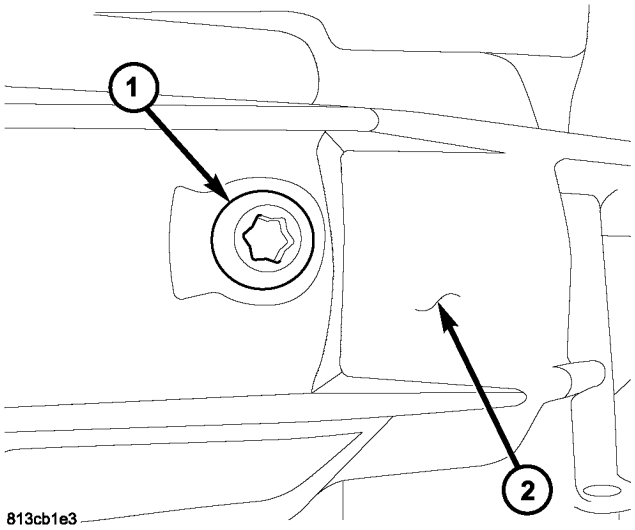

Fig. 46 IDLER SHAFT BOLT

1 - IDLER GEAR SHAFT BOLT
2 - HOUSING

(1) Remove reverse idler gear shaft bolt (1) (Fig. 46) from housing (2).

(2) Thread idler gear shaft bolt (1) (Fig. 47) into the shaft (2). Then work shaft (2) out of the idler gear.

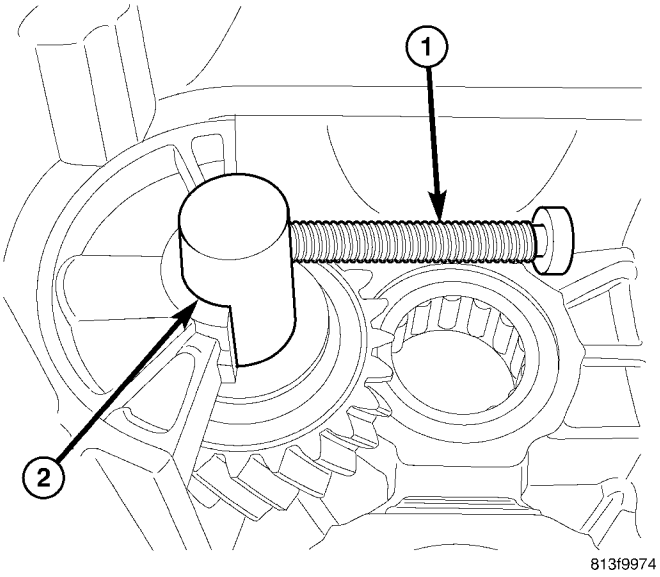

Fig. 47 PULL IDLER SHAFT

1 - IDLER GEAR SHAFT BOLT
2 - IDLER GEAR SHAFT

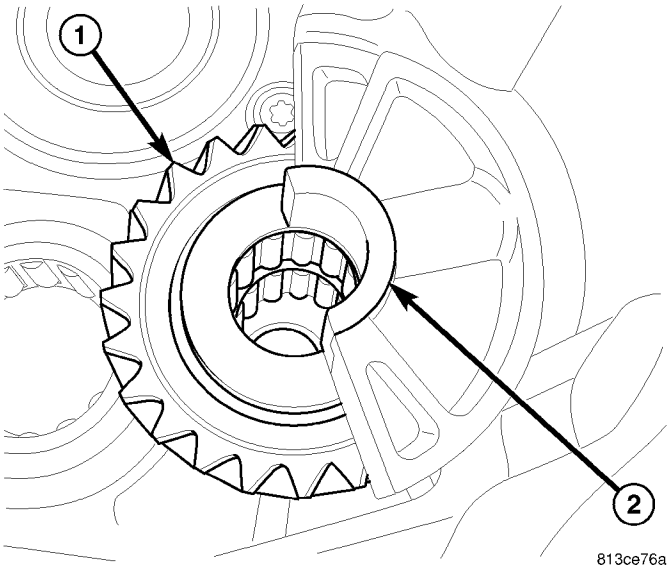

Fig. 48 IDLER SHAFT SUPPORT

1 - REVERSE IDLER GEAR
2 - SHAFT SUPPORT

(3) Remove reverse idler gear (1) (Fig. 48) shaft support (2).

MANUAL TRANSMISSION - NSG370 (Continued)

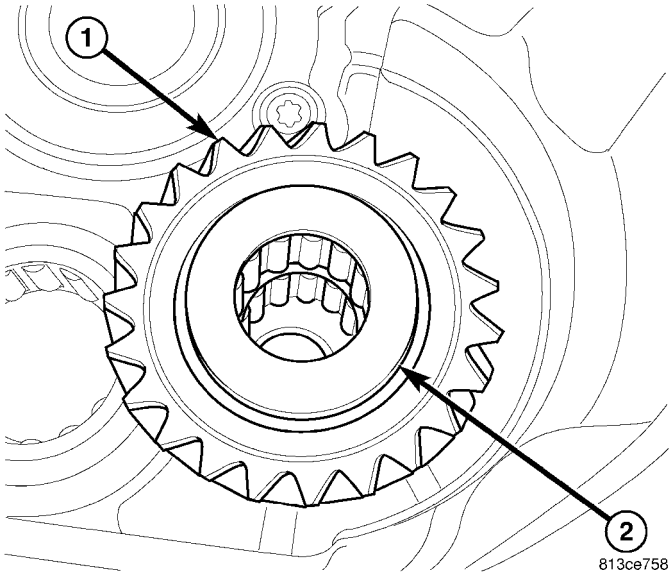

Fig. 49 IDLER GEAR THRUST WASHER

1 - REVERSE IDLER GEAR
2 - THRUST WASHER

(4) Remove reverse idler gear (1) (Fig. 49) thrust washer (2).

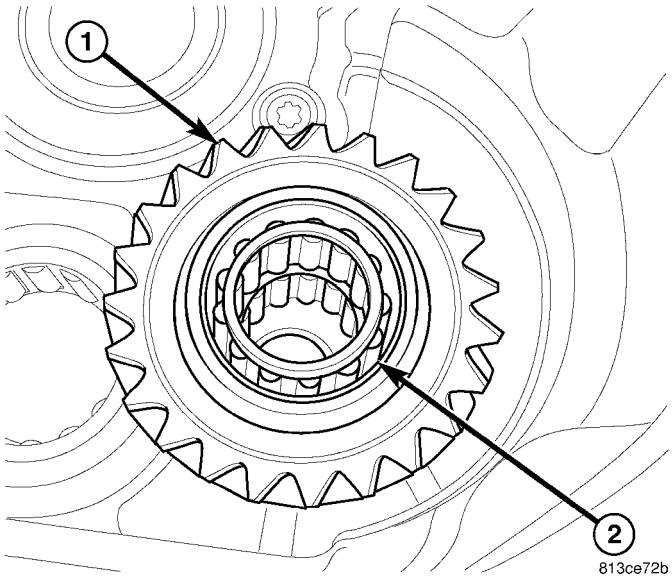

Fig. 50 IDLER GEAR BEARING

1 - REVERSE IDLER GEAR
2 - BEARING

(5) Remove reverse idler gear (1) (Fig. 50) and bearing (2).

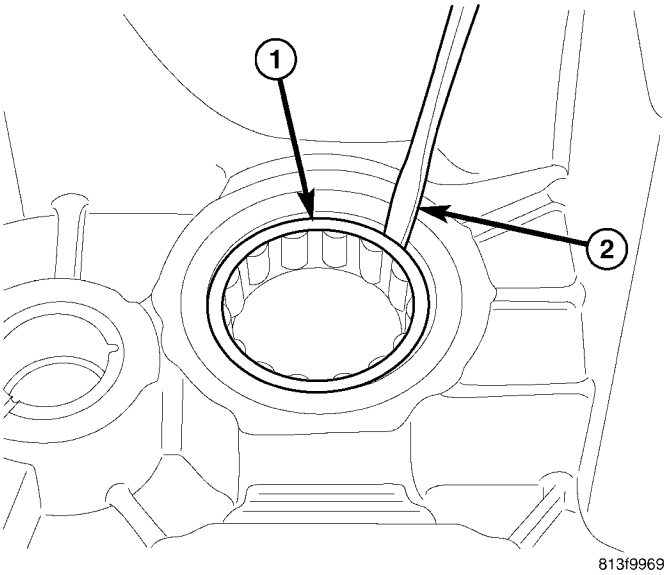

Fig. 51 BEARING CAGE

1 - ROLLER BEARING CAGE
2 - SCREWDRIVER

(6) Break plastic countershaft roller bearing cage (1) (Fig. 51) with a screw driver (2). Then remove cage and roller bearing.

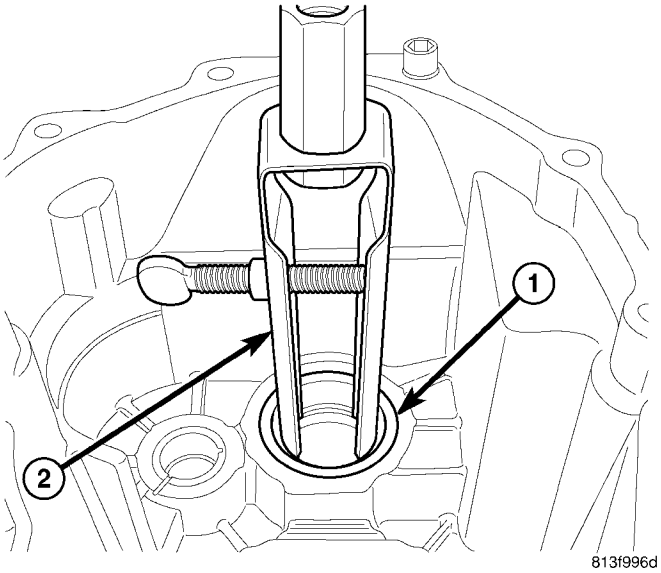

Fig. 52 BEARING SHELL PULLER

1 - ROLLER BEARING CAGE
2 - REMOVER

(7) Remove countershaft roller bearing shell (1) (Fig. 52) from the rear housing with Remover 7794-A (2) and Slide Hammer C-637.

MANUAL TRANSMISSION - NSG370 (Continued)

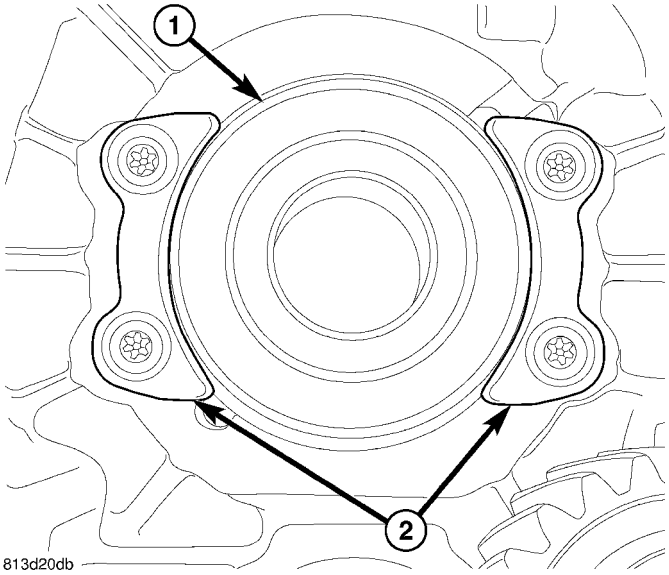

Fig. 53 REAR MAINSHAFT BEARING RETAINER

1 - MAINSHAFT BEARING
2 - RETAINERS

(8) Remove mainshaft bearing (1) (Fig. 53) retainer (2) bolts and remove retainers.

(9) Remove bearing from housing with a hammer and driver.

CLEANING

Clean gears, shafts, shift components and transmission housings with a standard parts cleaning solvent. Do not use acid or corrosive base solvents. Dry all parts except bearings with compressed air.

Clean shaft bearings with a mild solvent such as Mopar degreasing solvent, Gunk or similar solvents. Do not dry the bearings with compressed air. Allow the bearings to either air dry or wipe them dry with clean shop towels.

INSPECTION

NOTE: Minor corrosion, nicks, or pitting can be smoothed with 400 grit emery and polished out with crocus cloth.

Bearings: Inspect for worn, cracked, flat-spotted or brinnelled.

Gears: Inspect for worn, chipped or cracked teeth. Inspect bearing surfaces for ware or flat-spotted.

Mainshaft: Inspect for worn splines, snap ring grooves and threads. Inspect bearing surfaces for ware or flat-spotted.**Third gear (1) (Fig. 54) and fourth gear (2) are serviced with mainshaft only.**

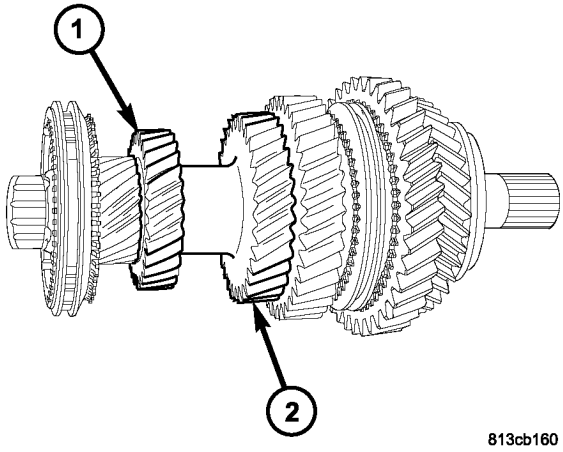

Fig. 54 MAINSHAFT

1 - THIRD GEAR
2 - FOURTH GEAR

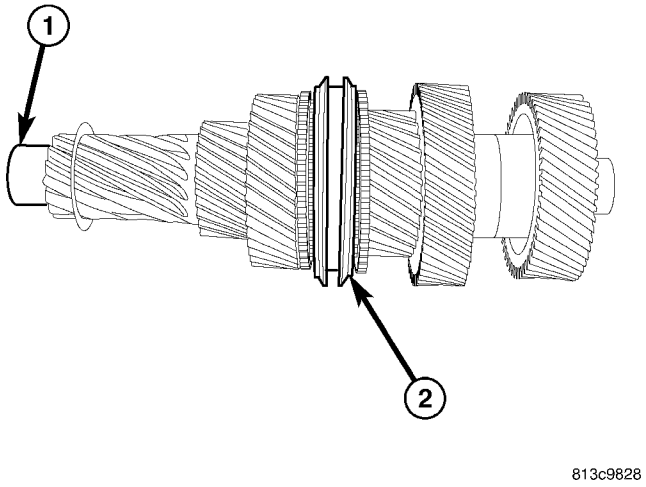

Fig. 55 COUNTERSHAFT

1 - BEARING SURFACES
2 - 3-4 SYNCHRONIZER ASSEMBLY

Countershaft: Inspect for worn, chipped or cracked teeth. Inspect bearing surfaces (1) (Fig. 55) for wear or flat-spots. Inspect 3-4 synchronizer assembly (2).**The countershaft is serviced as an assembly.**

MANUAL TRANSMISSION - NSG370 (Continued)

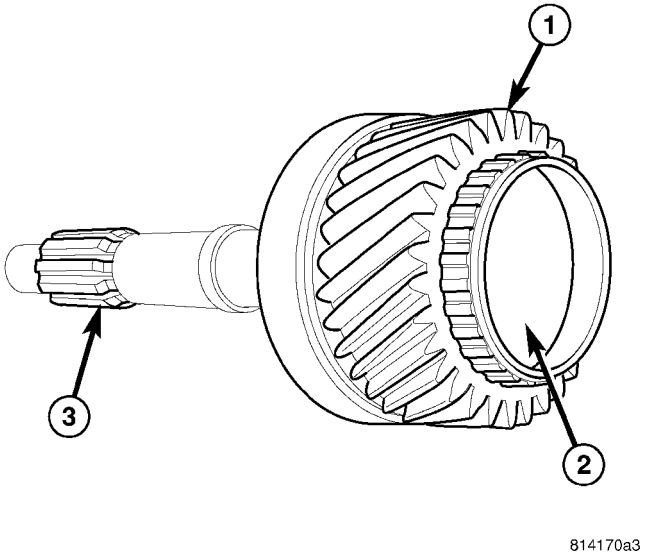

Fig. 56 INPUT SHAFT

1 - TEETH
2 - BEARING SURFACE
3 - SPLINE

Input Shaft: Inspect for worn, chipped or cracked teeth (1). Inspect bearing surface (2) for wear or flat-spots. Inspect for worn splines (3) (Fig. 56).

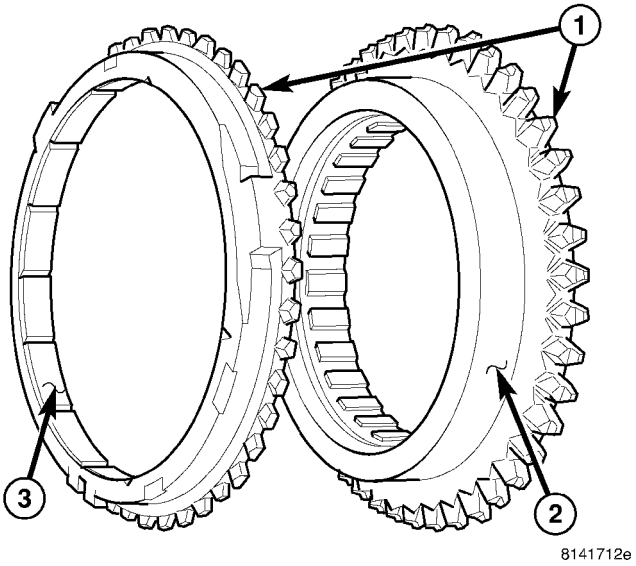

Fig. 57 SYNCHRONIZER RINGS

1 - TEETH
2 - FRICTION SURFACE
3 - FRICTION MATERIAL

Synchronizer components: Inspect for worn, chipped or cracked teeth (1) and burned friction surface (2) or flaking off friction material (3) (Fig. 57). **Synchronizers are serviced as an assembly. 3-4 synchronizer assembly (2) is serviced with countershaft.**

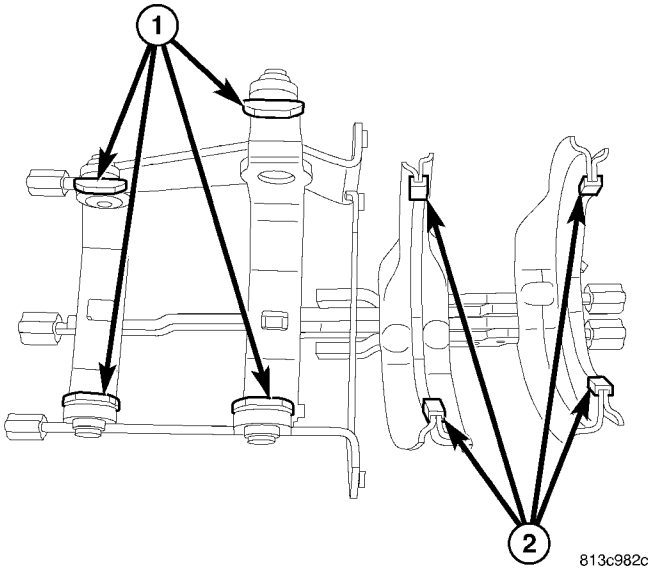

Fig. 58 SHIFT FORKS

1 - SHIFT FORK SHOES
2 - SHIFT FORK PADS

Shift forks: Inspect shift forks and shoes (1) (Fig. 58) for wear and distortion. Check fit of fork shoes in synchronizer sleeve to ensure parts fit and work smoothly, replace if necessary. If shift fork pads (2) are worn, the shift fork must be replaced.

Housing/Tail housing: Inspect sealing and mating surfaces are free of burrs and nicks. Inspect alignment dowels are tight and in good condition.

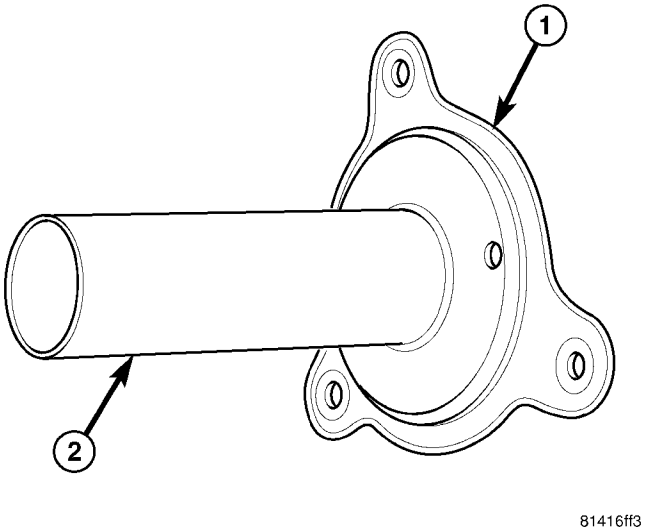

Fig. 59 RETAINER INPUT SHAFT

1 - RETAINER
2 - SLIDE SURFACE

Input Shaft Retainer: Inspect retainer (1) release bearing slide surface (2) (Fig. 59).

MANUAL TRANSMISSION - NSG370 (Continued)

ASSEMBLY

WARNING: Use welding gloves when handling heated components. Failure to follow these instructions will result in personal injury.

CAUTION: A bearing heater is used to assembly some components. Use only a bearing heater/hot plate and follow manufactures instructions. Heat components to 100 - 177 Celsius (212° Min - 350° Max Fahrenheit). Never use an open flame to heat components. Never leave components on heater for and extended amount of time. If component is discolored after heating the component has been overheated and must not be used. Failure to follow these instructions will result in component damage.

MAINSHAFT

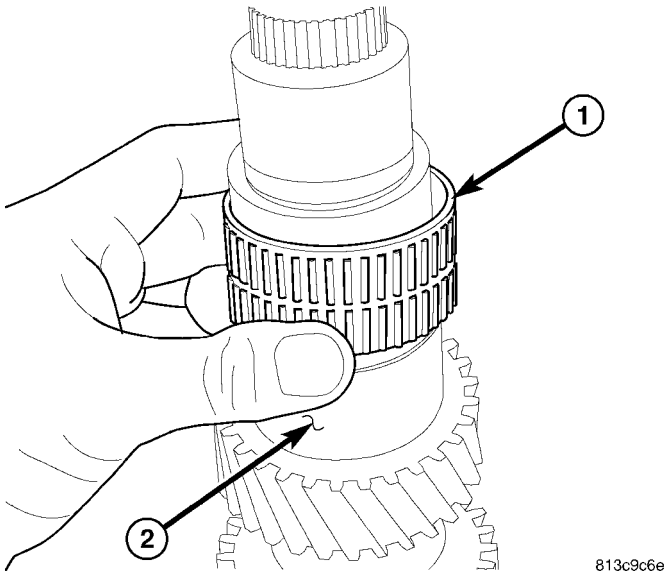

Fig. 60 SECOND GEAR BEARING

1 - SECOND GEAR BEARING
2 - MAINSHAFT

NOTE: Reuse snap rings in there original locations. Or thickest snap ring that will fit.

(1) Place mainshaft in Fixture 9648 mounted in a vise.

(2) Install second gear bearing (1) (Fig. 60) on mainshaft (2).

(3) Install second gear (1) (Fig. 61) on bearing (2).

(4) Install inner synchronizer friction ring (1) (Fig. 62) on second gear (2).

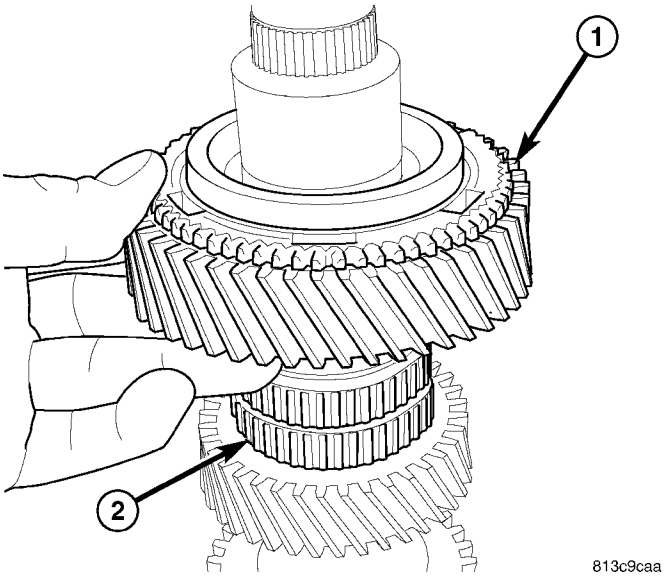

Fig. 61 SECOND GEAR

1 - SECOND GEAR
2 - BEARING

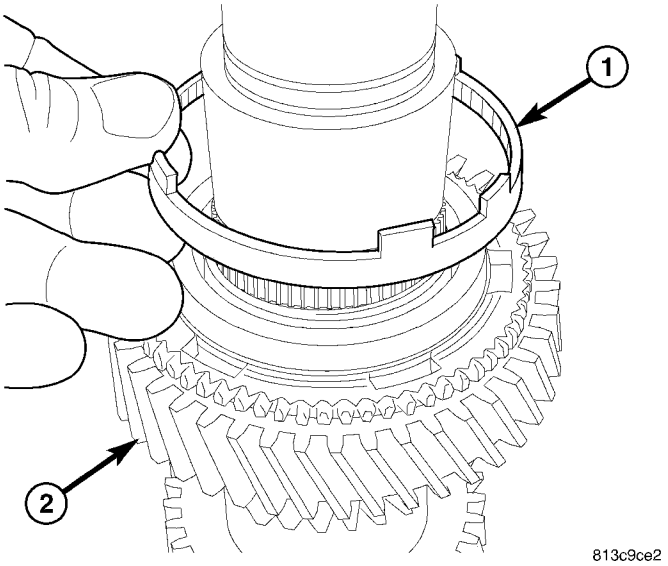

Fig. 62 2ND INNER FRICTION RING

1 - SYNCHRONIZER FRICTION RING
2 - SECOND GEAR

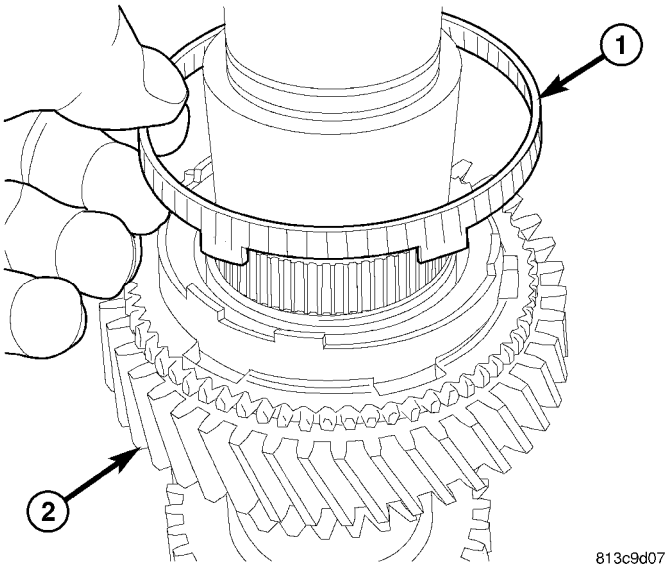

Fig. 63 2ND OUTER FRICTION RING

1 - OUTER SYNCHRONIZER FRICTION RING
2 - SECOND GEAR

(5) Install outer synchronizer friction ring (1) (Fig. 63) on second gear (2).

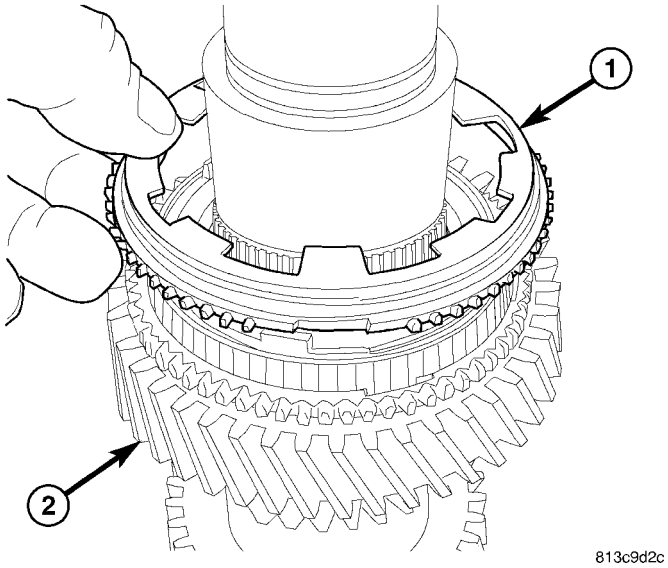

Fig. 64 2ND BLOCKER RING

1 - SYNCHRONIZER BLOCKER RING
2 - SECOND GEAR

(6) Install synchronizer blocker ring (1) (Fig. 64) on second gear (2).

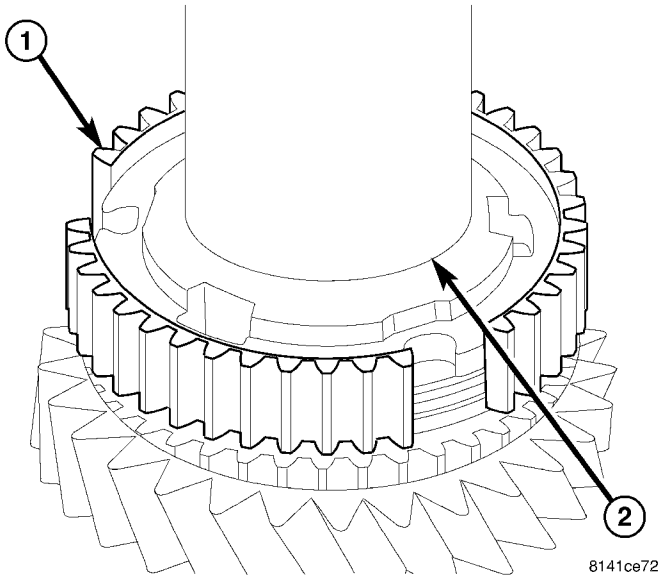

Fig. 65 1-2 SYNCHRO HUB INSTALLER

1 - 1-2 SYNCHRONIZER HUB
2 - INSTALLER

(7) Install 1-2 synchronizer hub (1) (Fig. 65) with Installer 8228 (2) and a press. Align hub detent openings with synchronizer rings.

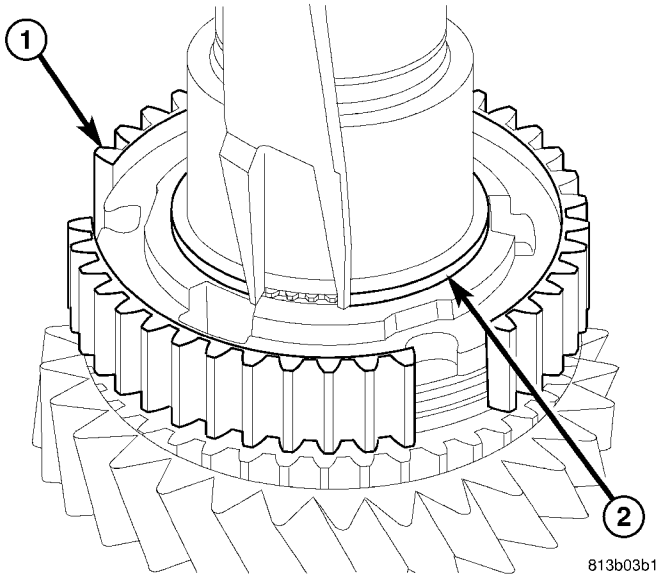

Fig. 66 1-2 SYNCHRO HUB SNAP RING

1 - SYNCHRONIZER HUB
2 - SNAP RING

(8) Install 1-2 synchronizer hub (1) (Fig. 66) snap ring (2).

MANUAL TRANSMISSION - NSG370 (Continued)

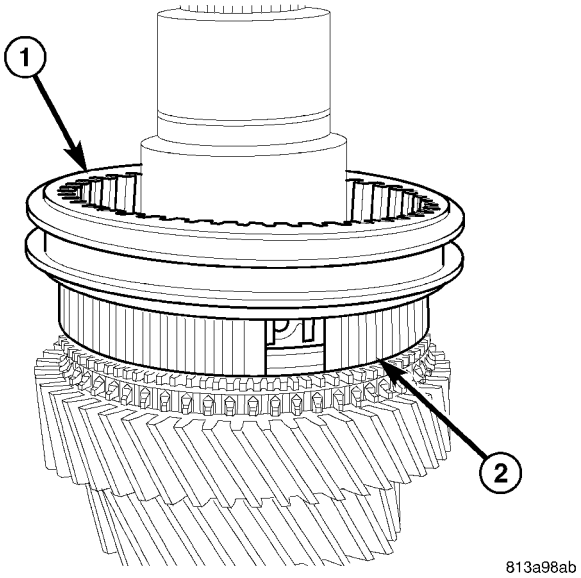

Fig. 67 1-2 SYNCHRO SLEEVE

1 - 1-2 SYNCHRONIZER SLEEVE
2 - SYNCHRONIZER HUB

(9) Install 1-2 synchronizer sleeve (1) (Fig. 67) and push to the bottom of the synchronizer hub (2).

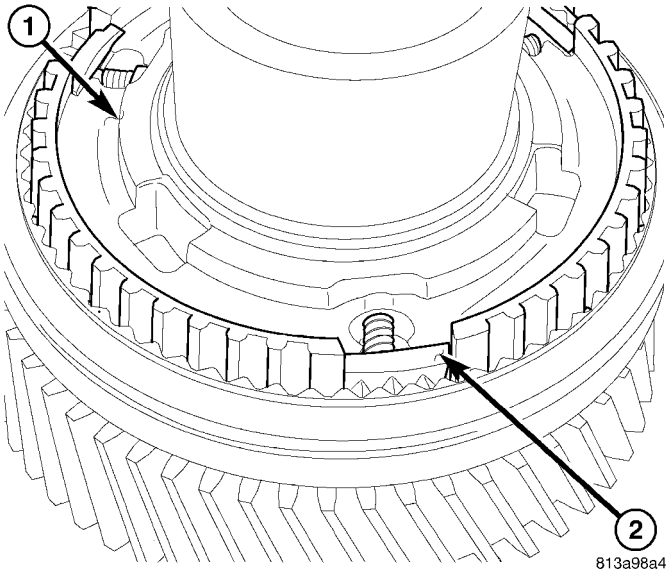

Fig. 68 1-2 SYNCHRO DETENT

1 - 1-2 SYNCHRONIZER HUB
2 - DETENTS

(10) Install 1-2 synchronizer detents, springs, and balls (2) (Fig. 68).

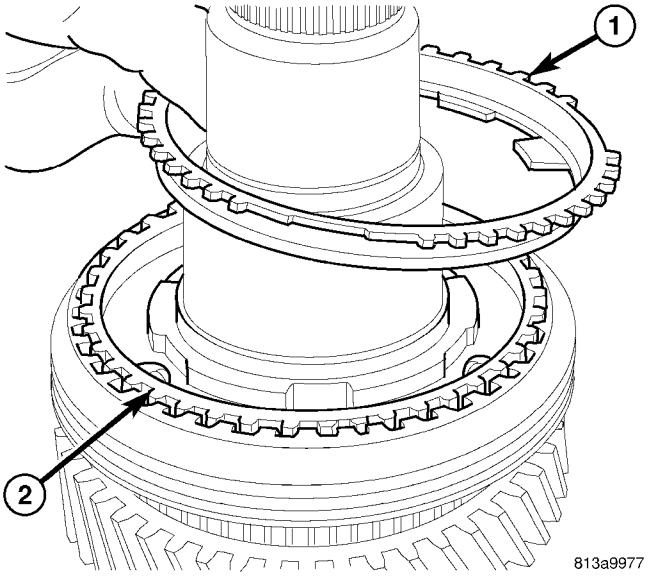

Fig. 69 FIRST GEAR OUTER BLOCKER RING

1 - FIRST GEAR BLOCKER RING
2 - SYNCHRONIZER HUB

(11) Install first gear blocker ring (1) (Fig. 69) into synchronizer hub (2).

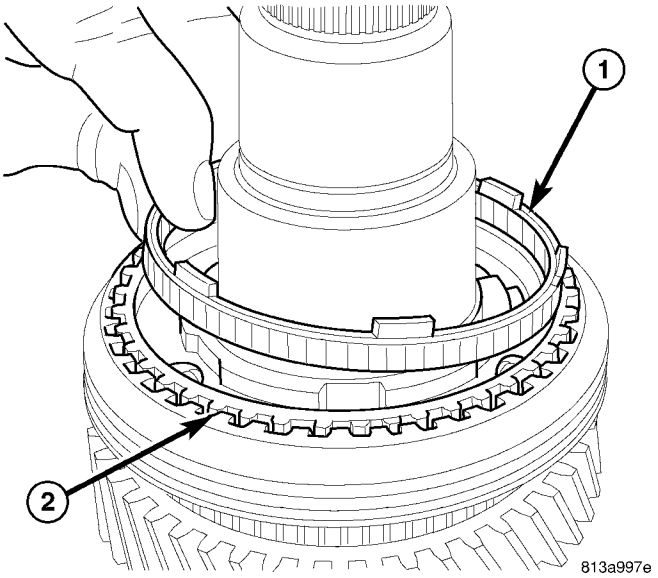

Fig. 70 FIRST GEAR FRICTION RING

1 - FIRST GEAR OUTER FRICTION RING
2 - SYNCHRONIZER HUB

(12) Install first gear outer friction ring (1) (Fig. 70) into synchronizer hub (2).

MANUAL TRANSMISSION - NSG370 (Continued)

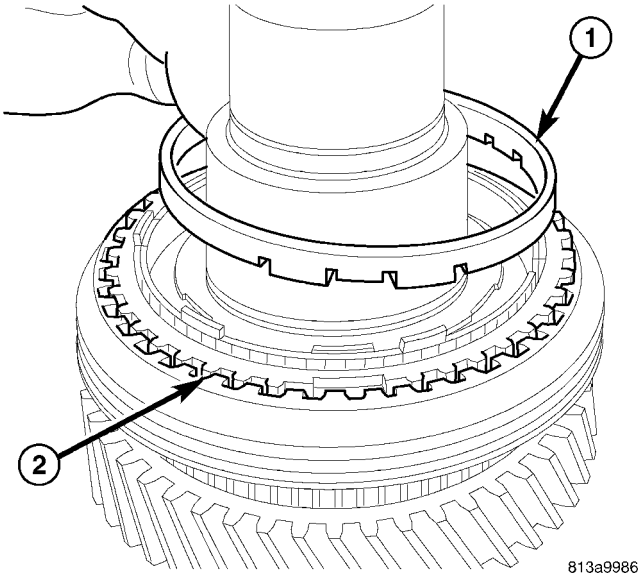

Fig. 71 FIRST GEAR INNER BLOCKER RING

1 - FIRST GEAR INNER BLOCKER RING
2 - SYNCHRONIZER HUB

(13) Install first gear inner blocker ring (1) (Fig. 71) into synchronizer hub (2).

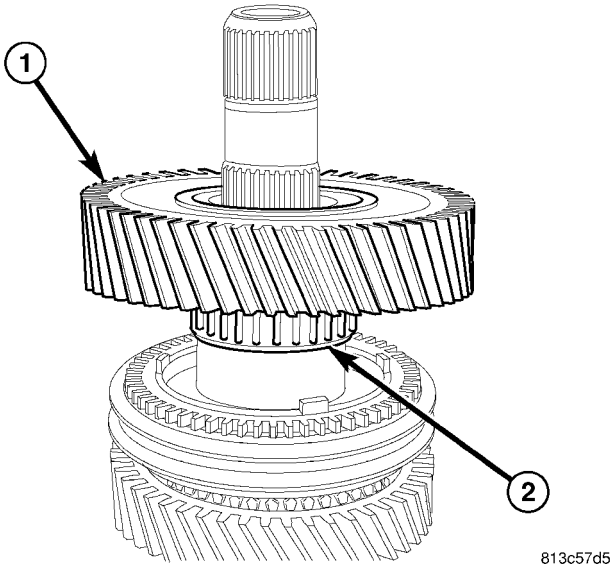

Fig. 72 1ST GEAR AND BEARING

1 - FIRST GEAR
2 - BEARING

(14) Install first gear (1) (Fig. 72) and bearing (2). Then center 1-2 synchronizer sleeve on synchronizer hub.

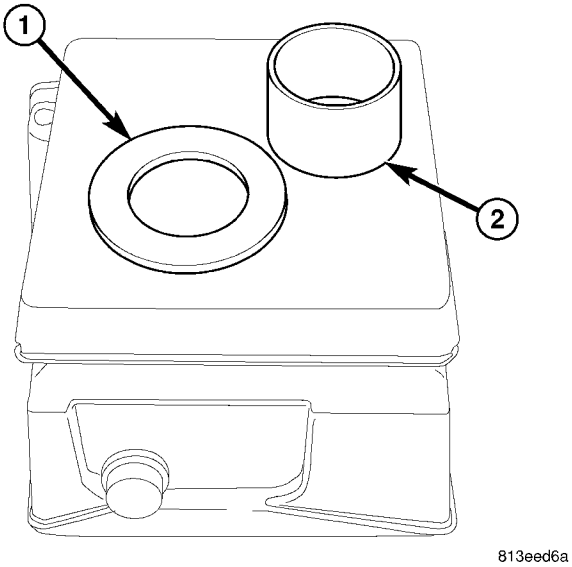

Fig. 73 WASHER AND RACE

1 - FIRST GEAR THRUST WASHER
2 - REVERSE GEAR BEARING RACE

(15) Heat first gear thrust washer (1) (Fig. 73) and reverse gear bearing race (2) with bearing heater.

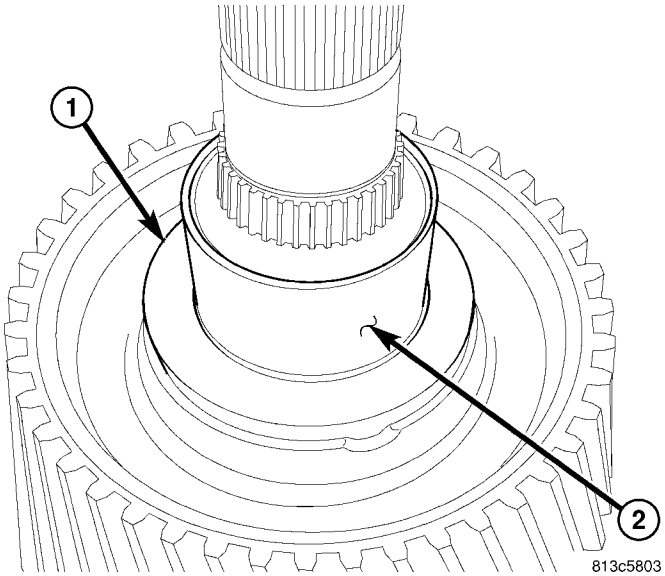

Fig. 74 THRUST WASHER & RACE

1 - FIRST GEAR THRUST WASHER
2 - REVERSE GEAR BEARING RACE

(16) Using welding gloves, install first gear thrust washer (1) (Fig. 74) and reverse gear bearing race (2).

MANUAL TRANSMISSION - NSG370 (Continued)

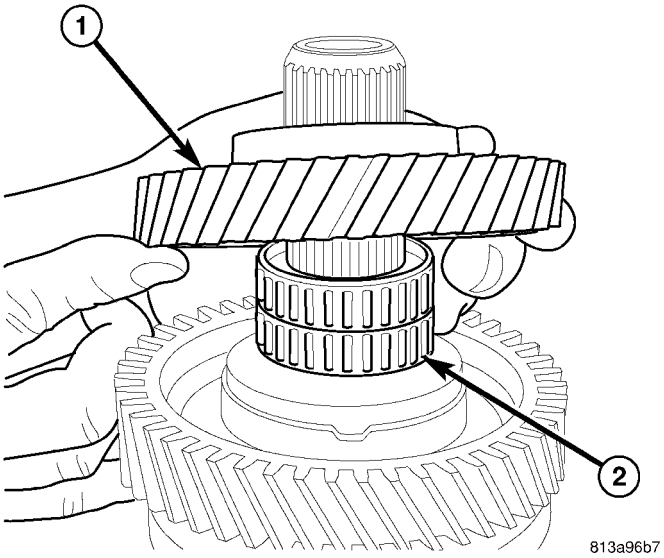

Fig. 75 REVERSE GEAR

1 - REVERSE GEAR
2 - BEARING

(17) Install reverse gear (1) (Fig. 75) and bearing (2).

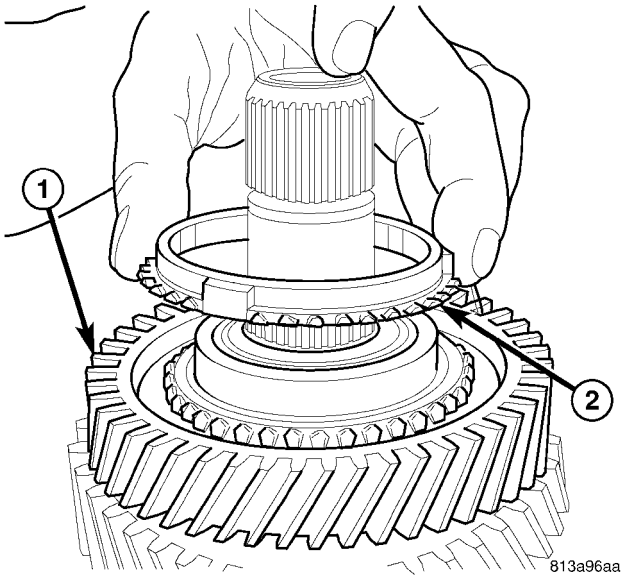

Fig. 76 REVERSE SYNCHRONIZER

1 - REVERSE GEAR
2 - SYNCHRONIZER FRICTION RING

(18) Install reverse gear (1) (Fig. 76) synchronizer friction ring (2).

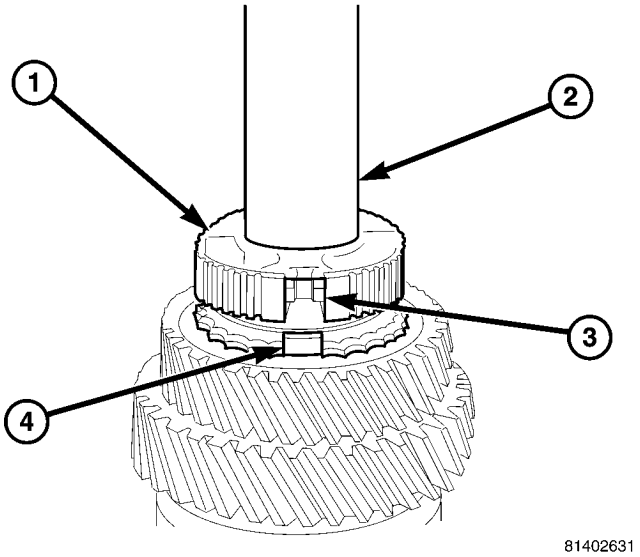

Fig. 77 REVERSE HUB INSTALLER

1 - SYNCHRONIZER HUB
2 - INSTALLER
3 - DETENT OPENING
4 - FRICTION RING TAB

(19) Install reverse gear synchronizer hub (1) on mainshaft with Installer W-262 (2) and a press. Align hub detent opening (3) with friction ring (4) lug (Fig. 77).

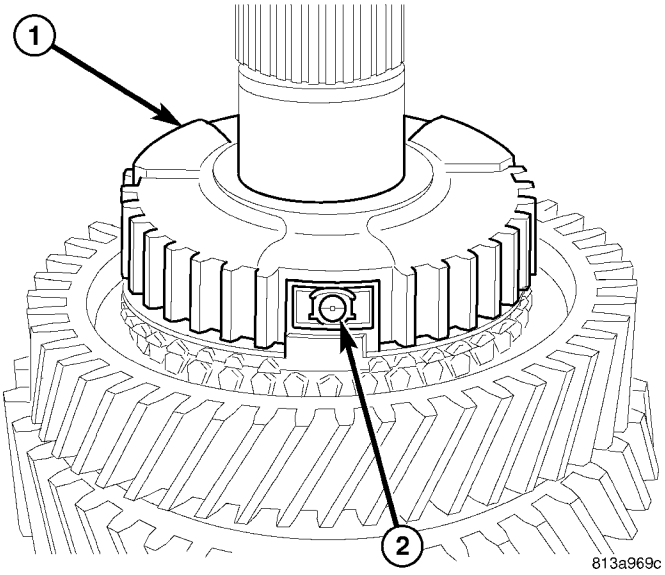

Fig. 78 REVERSE SYNCHRO HUB DETENT

1 - SYNCHRONIZER HUB
2 - DETENTS

(20) Install reverse gear synchronizer hub (1) (Fig. 78) detents (2).

MANUAL TRANSMISSION - NSG370 (Continued)

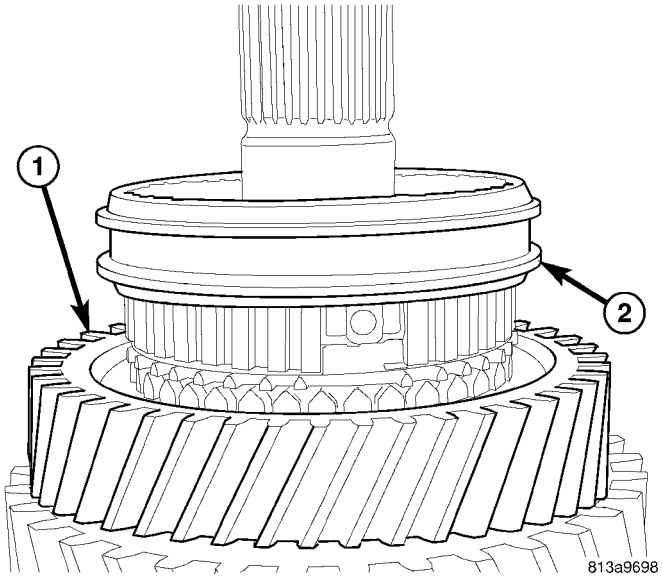

Fig. 79 REVERSE GEAR SYNCHRO SLEEVE

1 - REVERSE GEAR
2 - SYNCHRONIZER SLEEVE

(21) Install reverse gear (1) (Fig. 79) synchronizer sleeve (2) and center sleeve on synchronizer hub.

(22) Remove mainshaft from Fixture 9648. Turn fixture over in the vise, then install opposite end of mainshaft in the fixture.

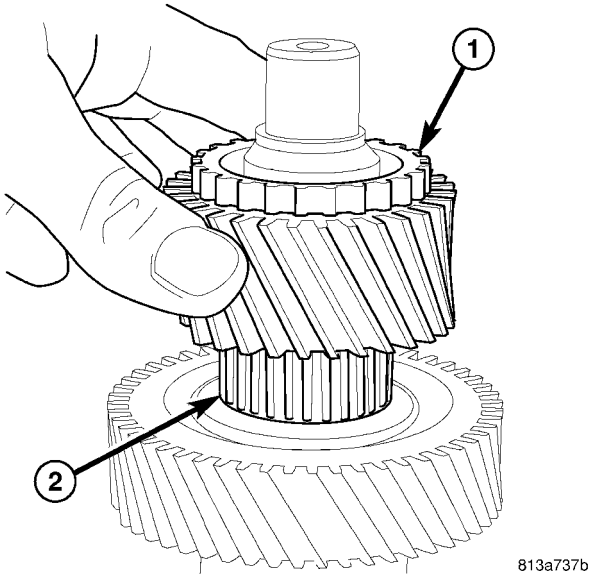

Fig. 80 SIXTH GEAR AND BEARING

1 - SIXTH GEAR
2 - BEARING

(23) Install sixth gear (1) (Fig. 80) and bearing (2).

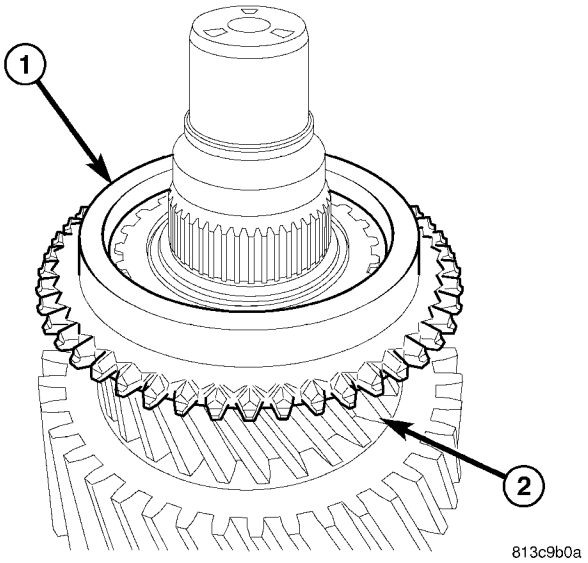

Fig. 81 6TH GEAR BLOCKER RING

1 - SIXTH GEAR BLOCKER RING
2 - SIXTH GEAR

(24) Install sixth gear synchronizer blocker ring (1) (Fig. 81) on sixth gear (2).

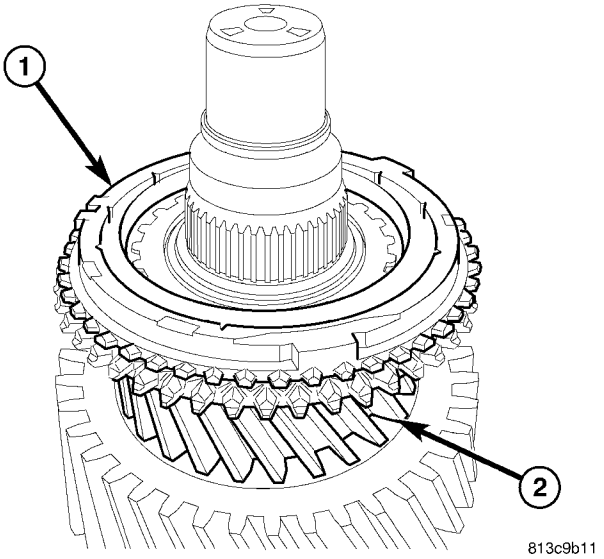

Fig. 82 6TH GEAR FRICTION RING

1 - SIXTH GEAR FRICTION RING
2 - SIXTH GEAR

(25) Install sixth gear synchronizer friction ring (1) (Fig. 82) on sixth gear (2).

MANUAL TRANSMISSION - NSG370 (Continued)

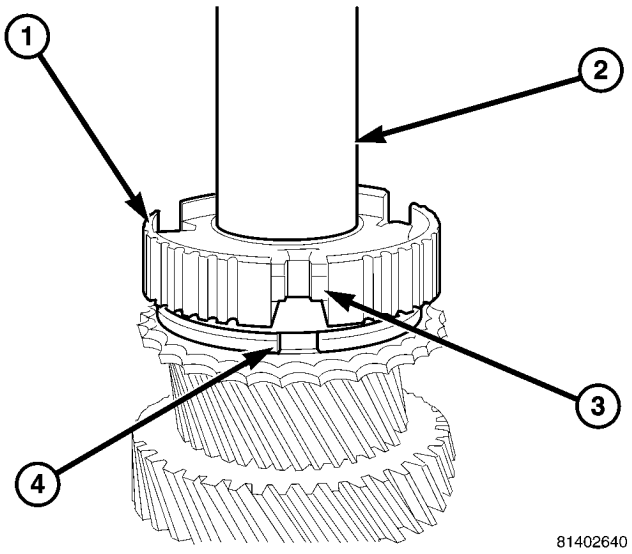

Fig. 83 5-6 HUB INSTALLER

1 - SYNCHRONIZER HUB
2 - INSTALLER
3 - DETENT OPENING
4 - FRICTION RING TAB

(26) Install 5-6 synchronizer hub (1) with Installer W-262 (2). Align hub detent opening (3) with friction ring lugs (4) and press hub on mainshaft (Fig. 83).

NOTE: 5-6 synchronizer hub center, is offset and must be install large offset down.

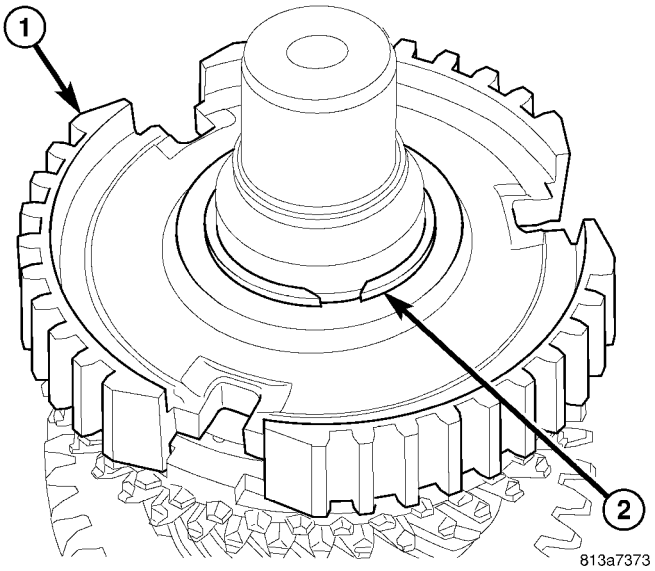

Fig. 84 5-6 SYNCHRO HUB SNAP RING

1 - SYNCHRONIZER HUB
2 - SNAP RING

(27) Install 5-6 synchronizer hub (1) (Fig. 84) snap ring (2).

(28) Install 5-6 synchronizer sleeve on hub (1).

REAR HOUSING

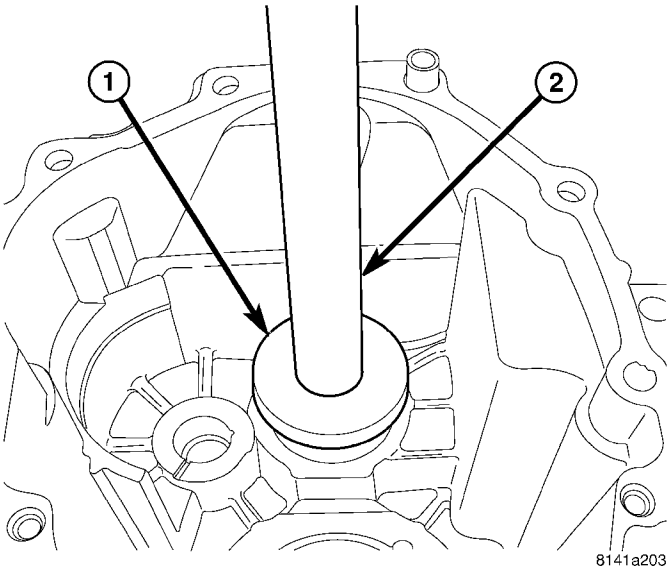

Fig. 85 REAR COUNTERSHAFT BEARING

1 - INSTALLER
2 - HANDLE

(1) Install countershaft bearing (Fig. 85) into rear housing with Installer 9643 (1) and Handle C-4171.

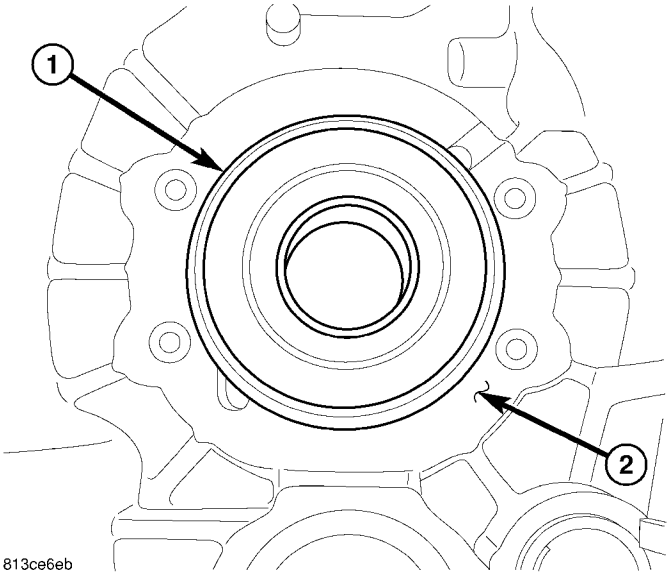

Fig. 86 REAR HOUSING MAINSHAFT BEARING

1 - MAINSHAFT BEARING
2 - HOUSING

(2) Install mainshaft bearing (1) (Fig. 86) into housing (2).

(3) Install bearing retainer and tighten bolts to 10 N·m (7.3 ft. lbs.).

MANUAL TRANSMISSION - NSG370 (Continued)

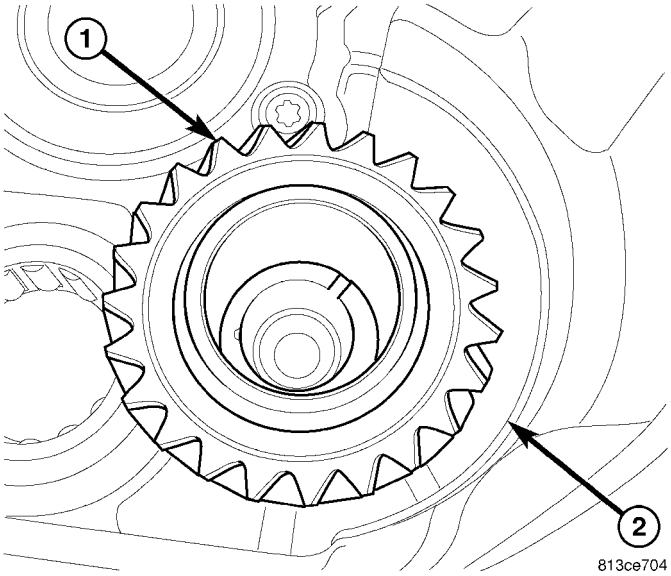

Fig. 87 REVERSE IDLER GEAR

1 - REVERSE IDLER GEAR
2 - HOUSING

(4) Install reverse idler gear (1) (Fig. 87) into housing (2).

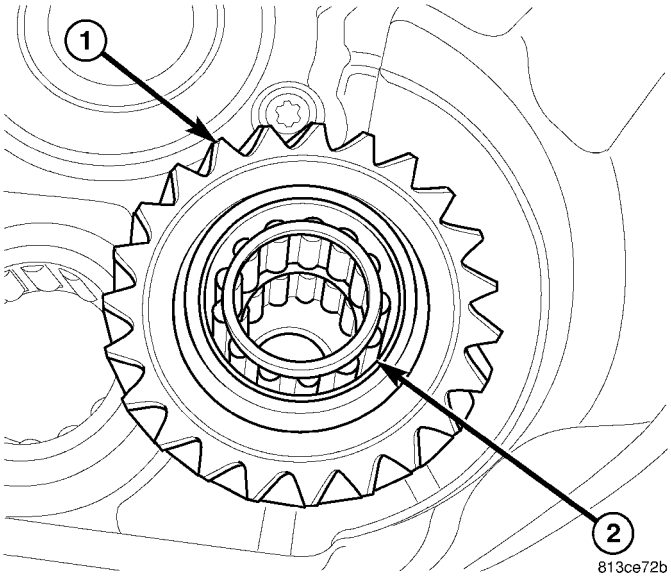

Fig. 88 IDLER GEAR BEARING

1 - REVERSE IDLER GEAR
2 - BEARING

(5) Install idler gear (1) (Fig. 88) bearing (2) into gear.

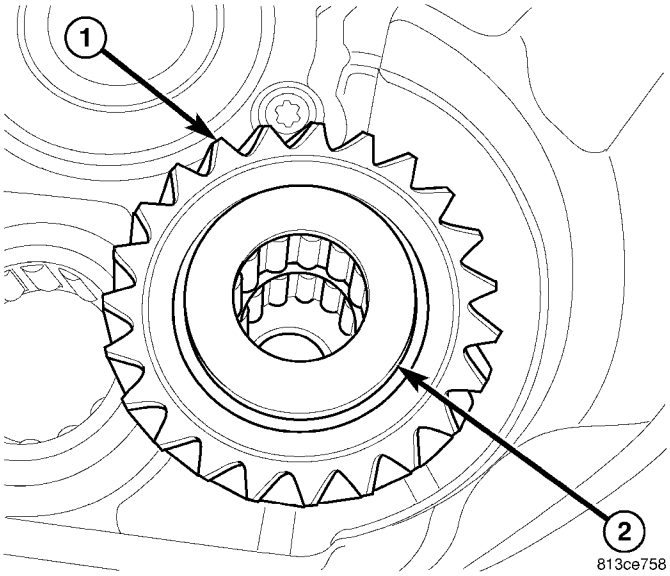

Fig. 89 IDLER GEAR THRUST WASHER

1 - REVERSE IDLER GEAR
2 - THRUST WASHER

(6) Install idler gear (1) (Fig. 89) thrust washer (2) on idler gear.

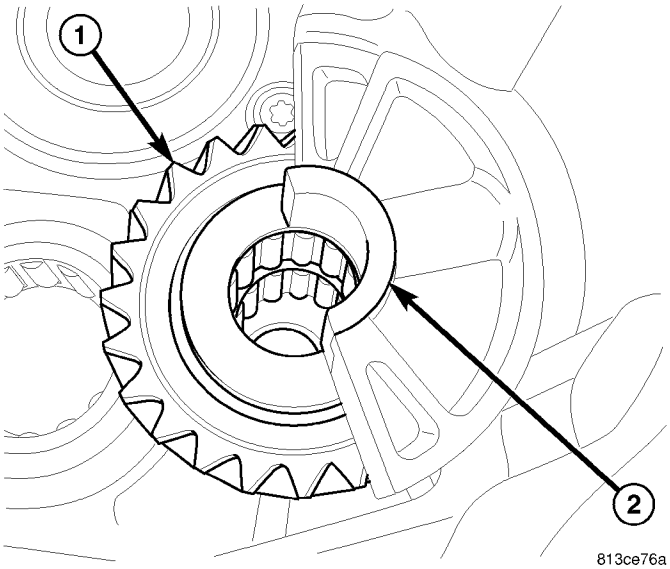

Fig. 90 IDLER SHAFT SUPPORT

1 - REVERSE IDLER GEAR
2 - SHAFT SUPPORT

(7) Install idler gear (1) (Fig. 90) shaft support (2) into housing.

MANUAL TRANSMISSION - NSG370 (Continued)

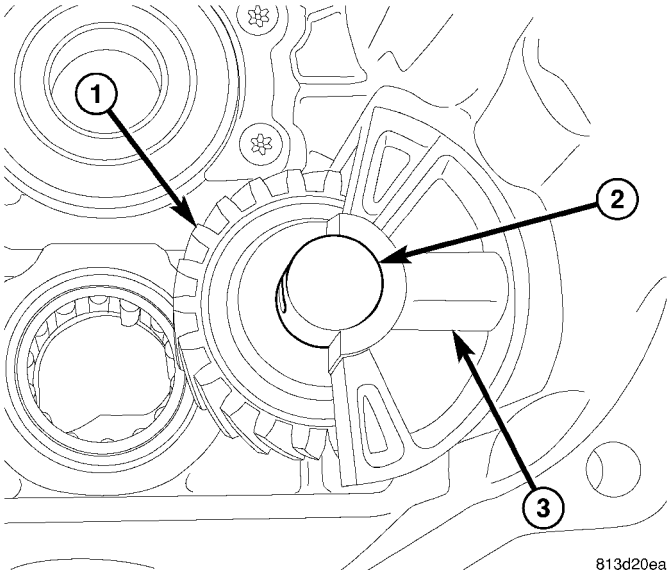

Fig. 91 IDLER GEAR SHAFT

1 - IDLER GEAR
2 - IDLER GEAR SHAFT
3 - SHAFT SUPPORT HOLE

(8) Install idler gear (1) (Fig. 91) shaft (2) with shaft bolt hole alined with shaft support hole (3).

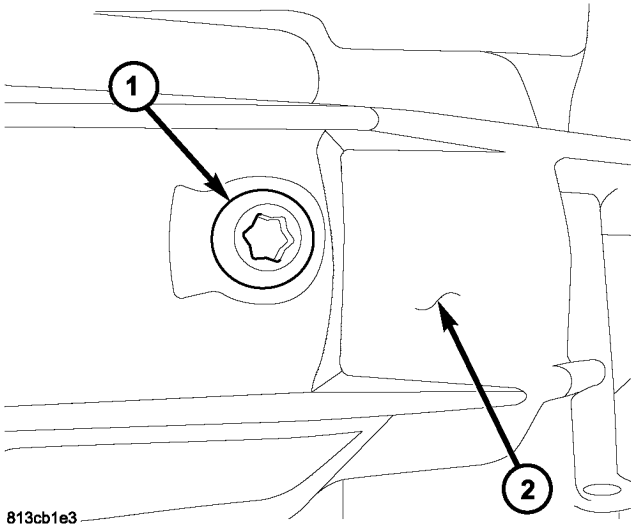

Fig. 92 IDLER SHAFT BOLT

1 - IDLER GEAR SHAFT BOLT
2 - HOUSING

(9) Install idler gear shaft bolt (1) (Fig. 92) into the housing (2) and tighten to 20 N.m (15 ft. lbs.).

(10) Install 4x4 output shaft seal into rear housing (1) with Installer 9638 (2) (Fig. 93). Install 4x2 output shaft seal into rear housing with Installer 9635 and Tube 6448A.

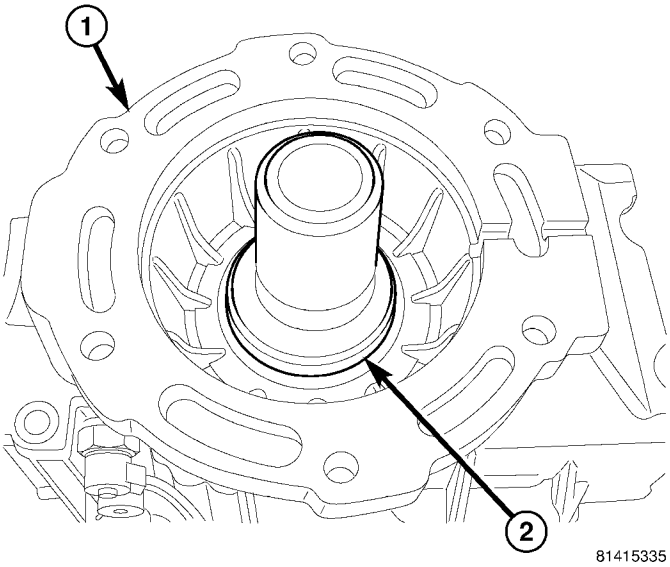

Fig. 93 OUTPUT SHAFT SEAL 4X4

1 - HOUSING
2 - INSTALLER

INPUT SHAFT

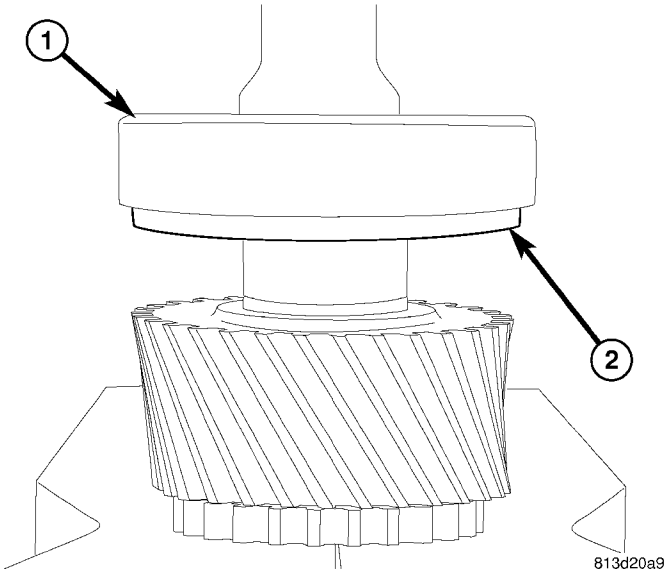

Fig. 94 INPUT SHAFT BEARING LIP

1 - INPUT SHAFT BEARING
2 - BEARING RETAINER LIP

(1) Install input shaft bearing (1) (Fig. 94) on input shaft with the bearing retainer lip (2) facing fifth gear.

MANUAL TRANSMISSION - NSG370 (Continued)

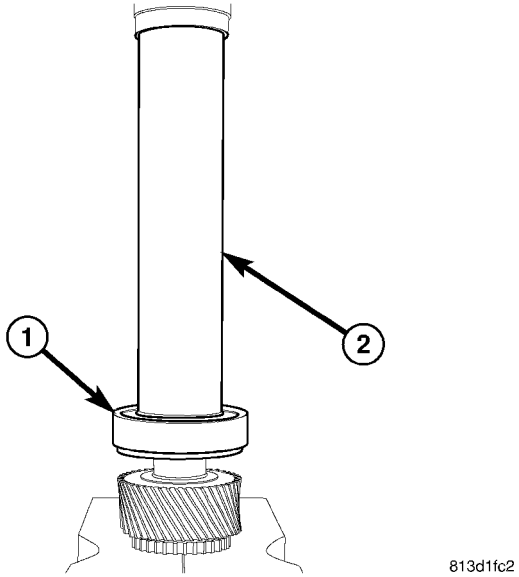

Fig. 95 INPUT SHAFT BEARING INSTALLER

1 - BEARING
2 - INSTALLER

(2) Install input shaft bearing (1) (Fig. 95) with Installer 6448A (2) and a press.

FRONT HOUSING

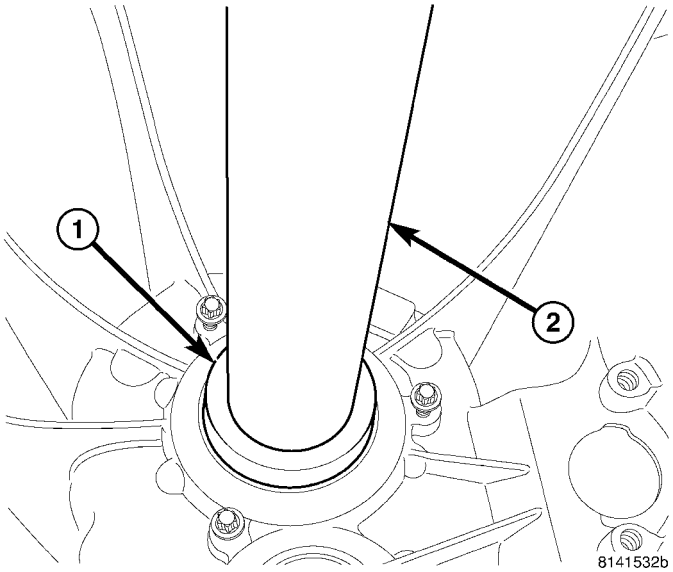

Fig. 96 INPUT SHAFT SEAL INSTALLER

1 - INSTALLER
2 - TUBE

(1) Install input shaft seal (Fig. 96) with Installer 9635 (1) tube 6448A (2).

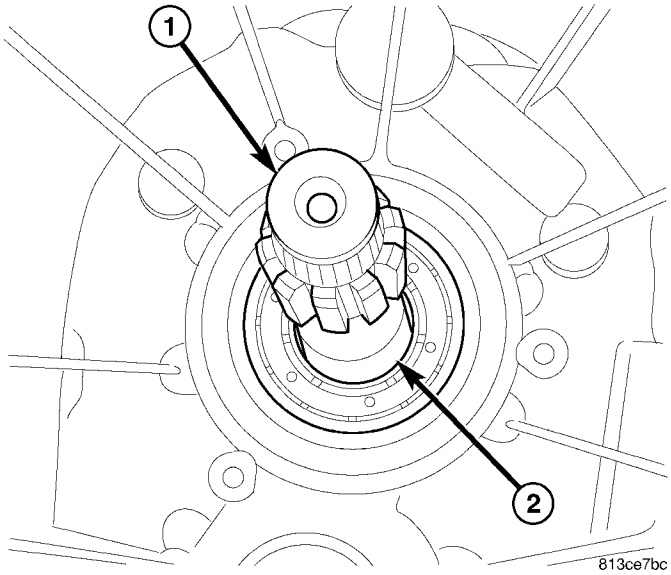

Fig. 97 INPUT SHAFT IN HOUSING

1 - INPUT SHAFT
2 - BEARING

(2) Install input shaft (1) (Fig. 97) with bearing (2) into housing.

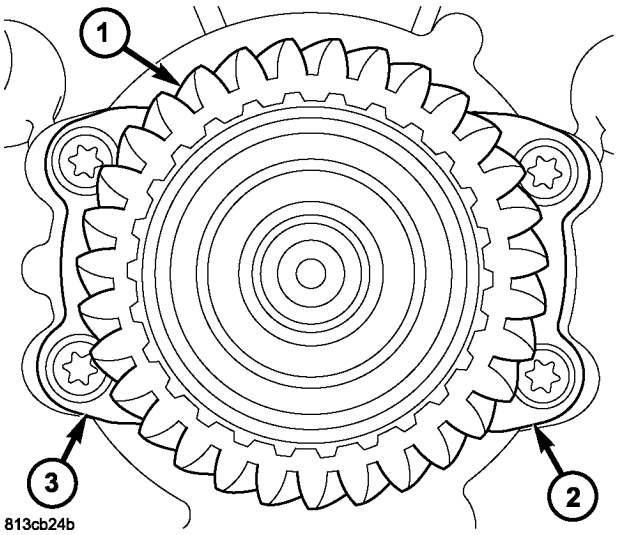

Fig. 98 INPUT SHAFT BEARING RETAINER

1 - INPUT SHAFT
2 - BEARING RETAINER
3 - BEARING RETAINER

(3) Install input shaft (1) (Fig. 98) bearing retainers (2, 3) and tighten bolts to 10 N·m (88 in. lbs.).

MANUAL TRANSMISSION - NSG370 (Continued)

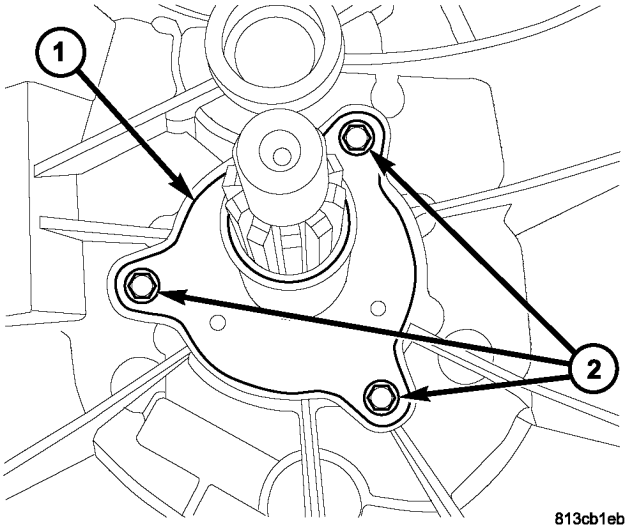

Fig. 99 INPUT SHAFT RETAINER

1 - INPUT SHAFT RETAINER
2 - BOLTS

(4) Install input shaft retainer (1) (Fig. 99) and tighten bolts (2) to 9 N·m (80 in. lbs.).

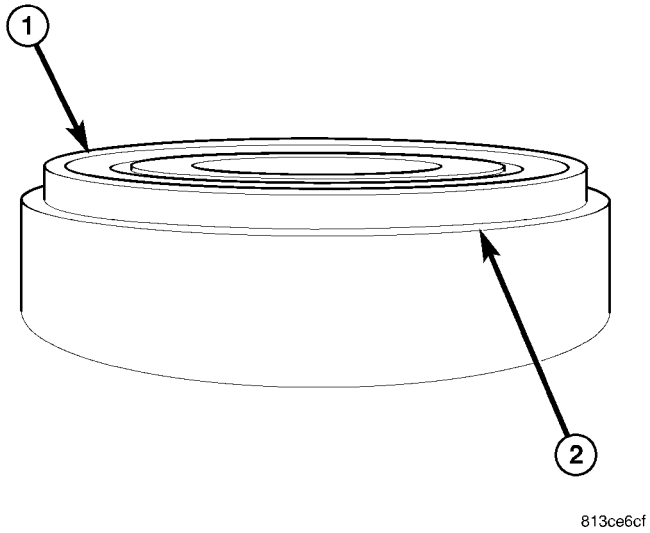

Fig. 100 BEARING RETAINER LIP

1 - COUNTERSHAFT BEARING
2 - BEARING RETAINER LIP

(5) Install countershaft bearing (1) (Fig. 100) into housing with bearing retainer lip (2) facing up.

(6) Install countershaft bearing (1) (Fig. 101) retainers (2) and tighten bolts to 10 N·m (88 in. lbs.).

FINAL ASSEMBLY

(1) Install mainshaft (1) onto Build Fixture 9633 (2) (Fig. 102).

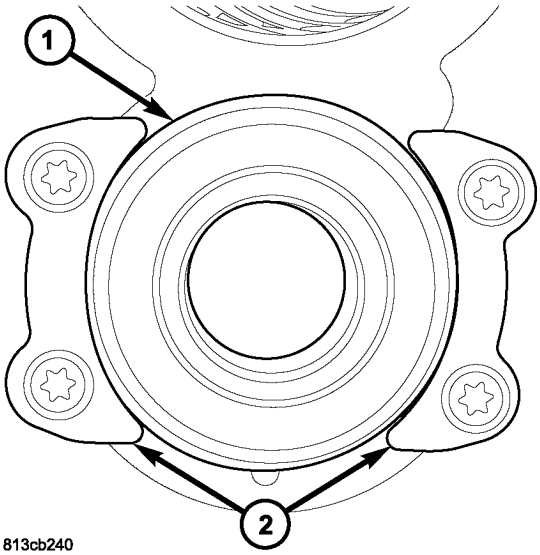

Fig. 101 COUNTERSHAFT BEARING RETAINER

1 - COUNTERSHAFT BEARING
2 - RETAINERS

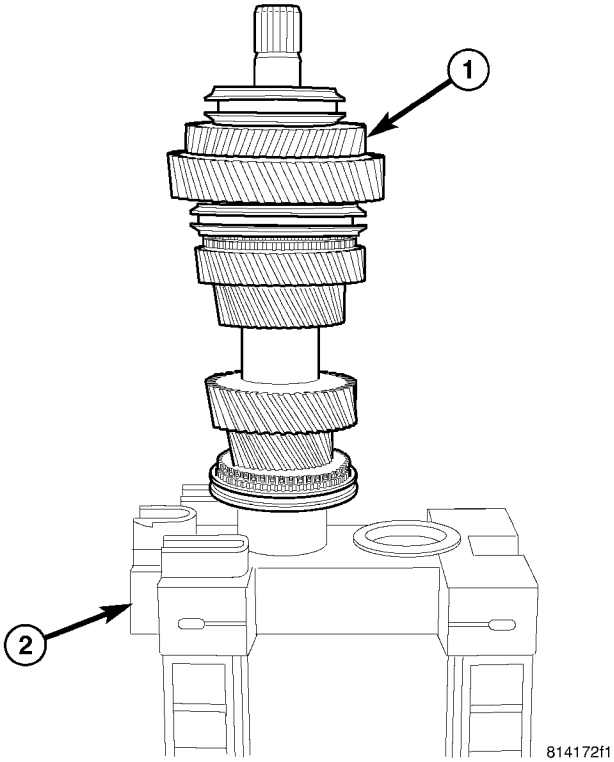

Fig. 102 MAINSHAFT IN FIXTURE

1 - MAINSHAFT
2 - FIXTURE

MANUAL TRANSMISSION - NSG370 (Continued)

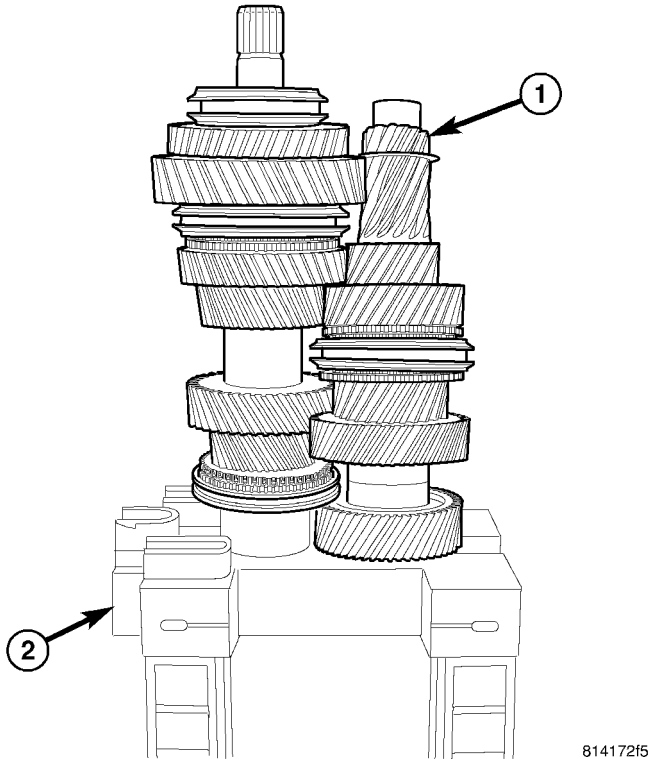

Fig. 103 COUNTERSHAFT IN FIXTURE

1 - COUNTERSHAFT
2 - FIXTURE

(2) Install countershaft (1) onto Build Fixture 9633 (2) (Fig. 103).

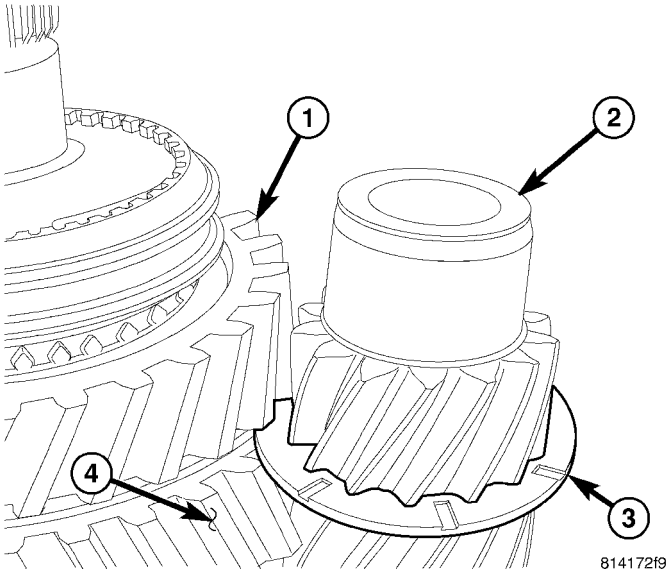

Fig. 104 OIL SILINGER

1 - REVERSE GEAR
2 - COUNTERSHAFT
3 - OIL SLINGER
4 - FIRST GEAR

(3) Install oil slinger (3) on countershaft (2) between reverse (1) and first gear (4) (Fig. 104).

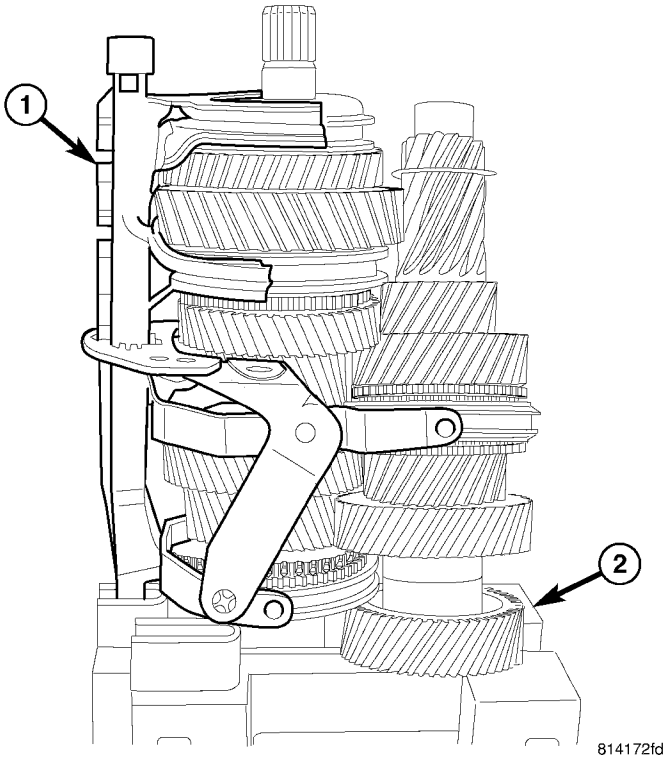

Fig. 105 SHIFT RAILS/FORKS IN FIXTURE

1 - SHIFT RAILS/FORKS
2 - FIXTURE

(4) Install shift rails and forks (1) onto Build Fixture 9633 (2) and countershaft/mainshaft. (Fig. 105).

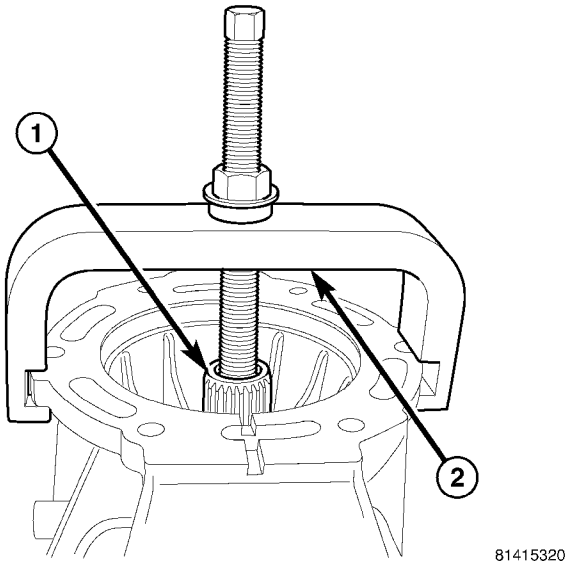

Fig. 106 MAINSHAFT INSTALLER

1 - MAINSHAFT
2 - REMOVER/INSTALLER

MANUAL TRANSMISSION - NSG370 (Continued)

(5) Install rear housing on mainshaft (1) (Fig. 106) with Installer 9636 (2).

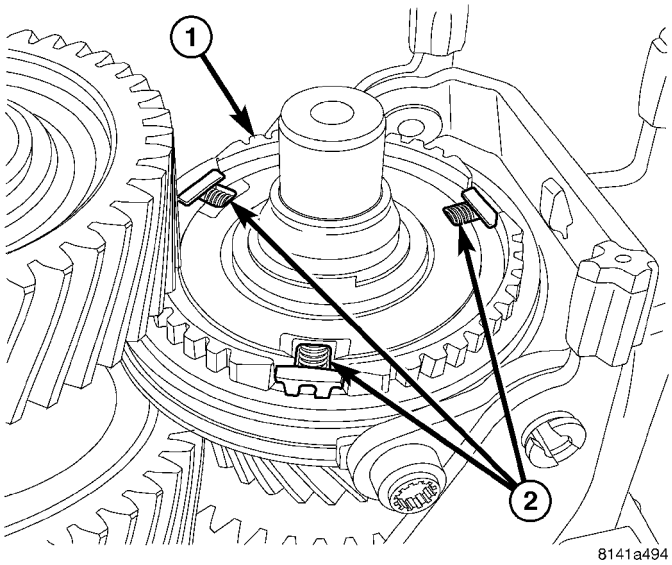

Fig. 107 5-6 SYNCRO DETENTS

1 - HUB
2 - DETENTS

(6) Remove rear housing with mainshaft, countershaft and shift rails from fixture. Set assembly on rear housing with shafts pointing up.

(7) Install 5-6 synchronizer hub (1) (Fig. 107) detents, springs, and balls (2).

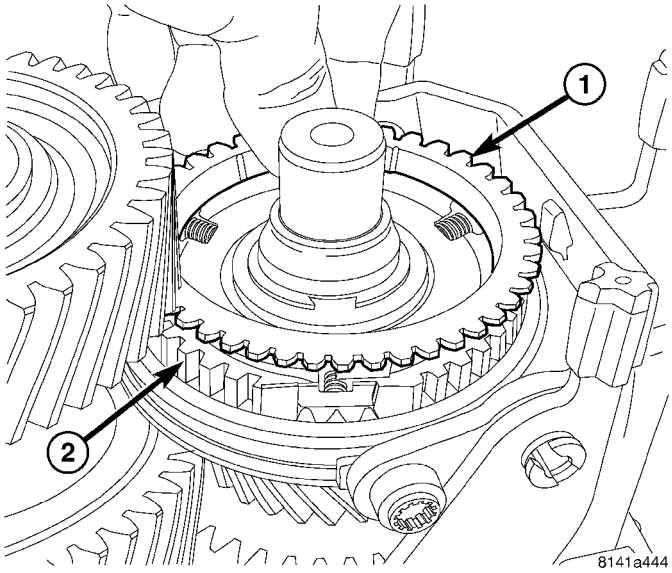

Fig. 108 FIFTH GEAR FRICTION RING

1 - FRICTION RING
2 - HUB

(8) Install fifth gear synchronizer friction ring (1) (Fig. 108) on 5-6 synchronizer hub (2).

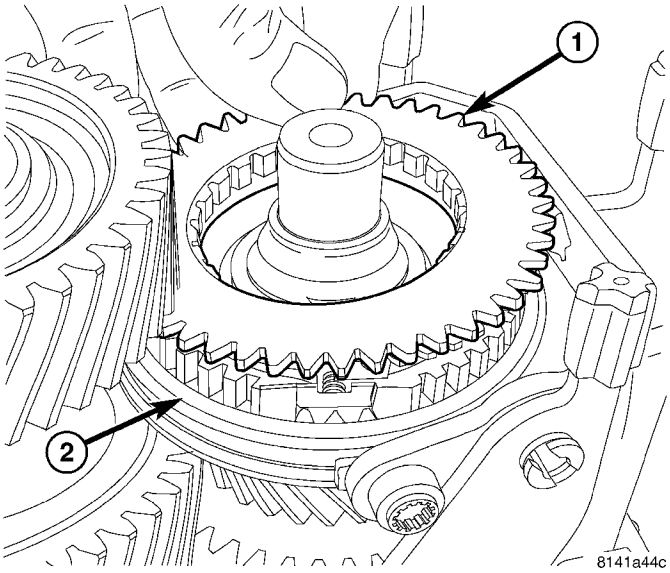

Fig. 109 FIFTH GEAR BLOCKER RING

1 - BLOCKER RING
2 - HUB

(9) Install fifth gear (Fig. 109) blocker ring (1) on 5-6 synchronizer hub (2). Then hold blocker ring and center synchronizer sleeve.

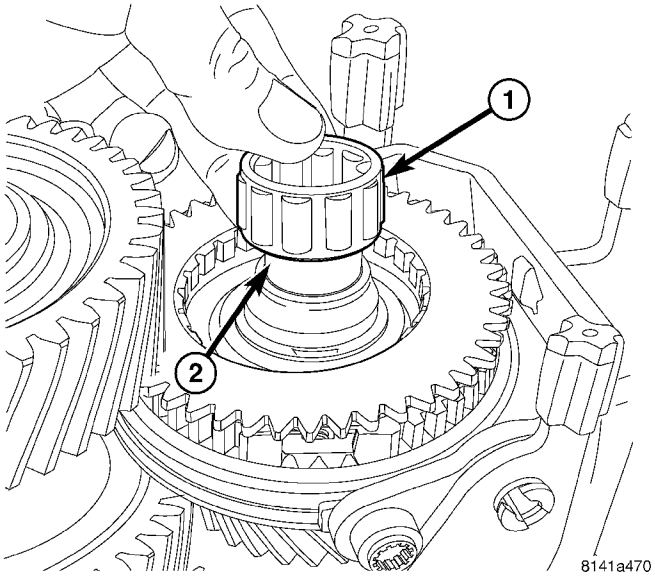

Fig. 110 INPUT SHAFT ROLLER BEARING

1 - ROLLER BEARING
2 - MAINSHAFT

(10) Install input shaft (Fig. 110) roller bearing (1) on mainshaft (2)..

MANUAL TRANSMISSION - NSG370 (Continued)

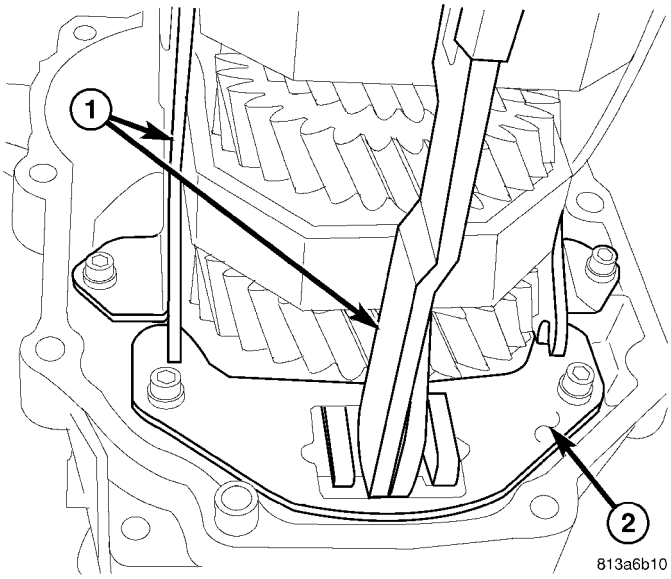

Fig. 111 SHIFT RAIL SUPPORT PLATE

1 - SHIFT RAILS
2 - SUPPORT PLATE

(11) Install shift rail (1) (Fig. 111) support plate (2) bolts and tighten to 8 N·m (71 in. lbs.).

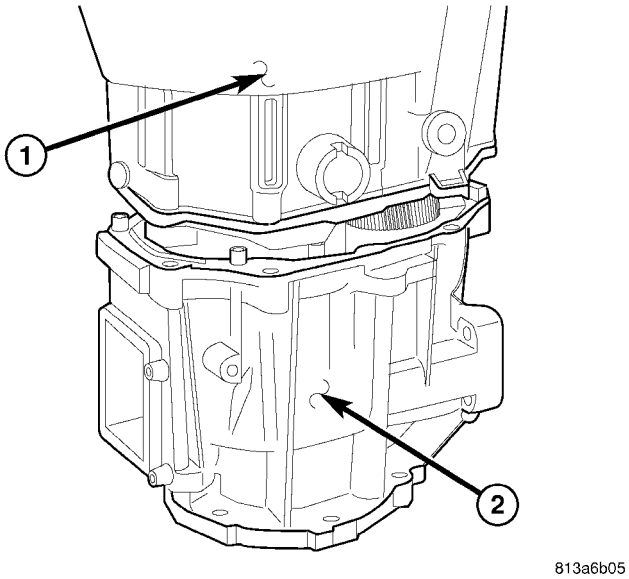

Fig. 112 SPLIT HOUSING

1 - FRONT HOUSING
2 - REAR HOUSING

(12) Apply MOPAR® Gasket Maker to front housing.

(13) Install front housing (1) (Fig. 112) on rear housing (2) and tighten bolts to 28 N·m (21 ft. lbs.).

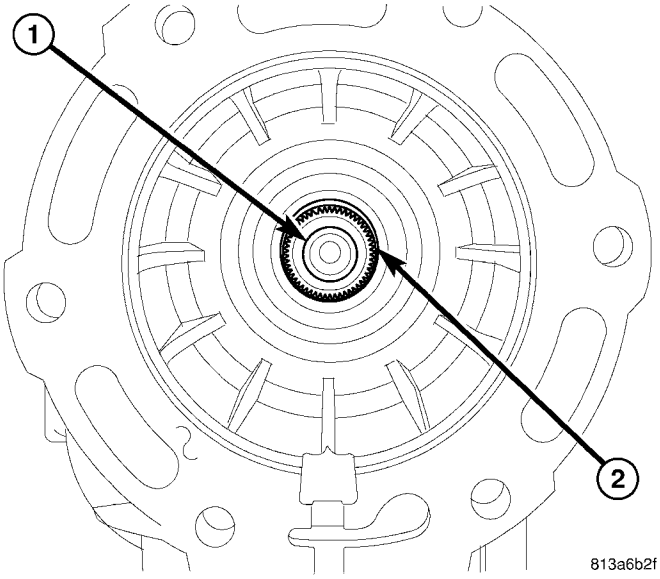

Fig. 113 OUTPUT SHAFT SNAP RING

1 - OUTPUT SHAFT
2 - SNAP RING

(14) Install output shaft (1) (Fig. 113) snap ring (2) 4x4 only.

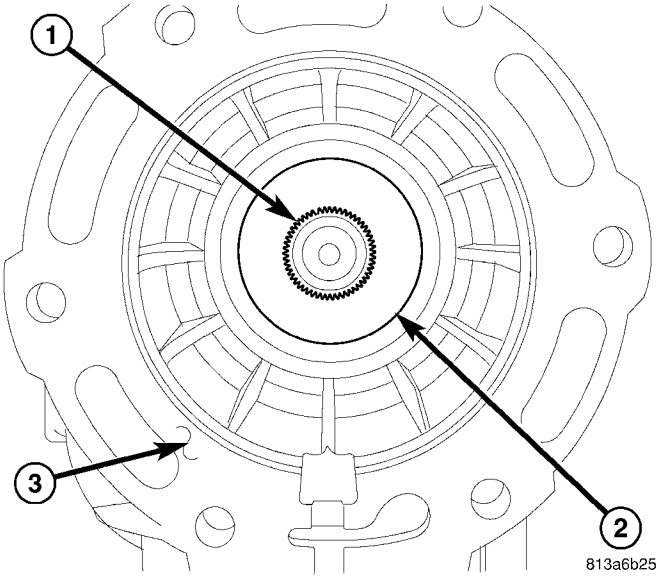

Fig. 114 OUTPUT SHAFT SEAL

1 - OUTPUT SHAFT
2 - SEAL
3 - REAR HOUSING

(15) Install output shaft (1) (Fig. 114) seal (2) in rear housing with Installer 9638.

MANUAL TRANSMISSION - NSG370 (Continued)

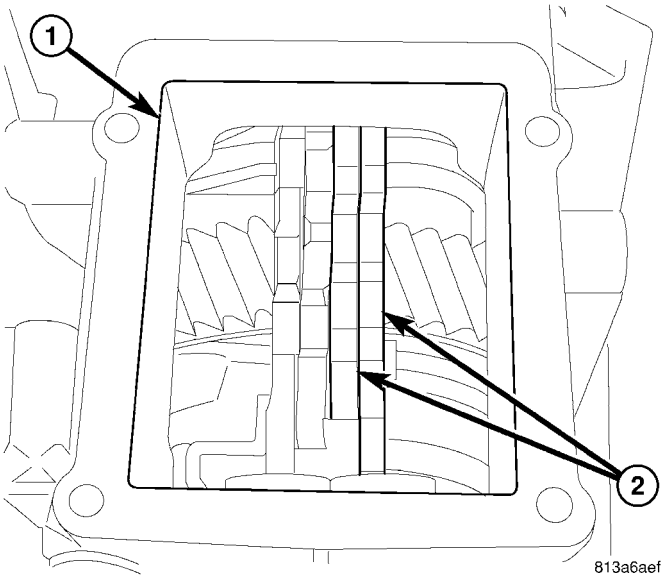

Fig. 115 SHIFT TOWER OPENING

1 - SHIFT TOWER OPENING
2 - SHIFT RAILS

(16) Through the shift tower opening (1) (Fig. 115) move two shift rails (2) forward to lock the transmission in two gear.

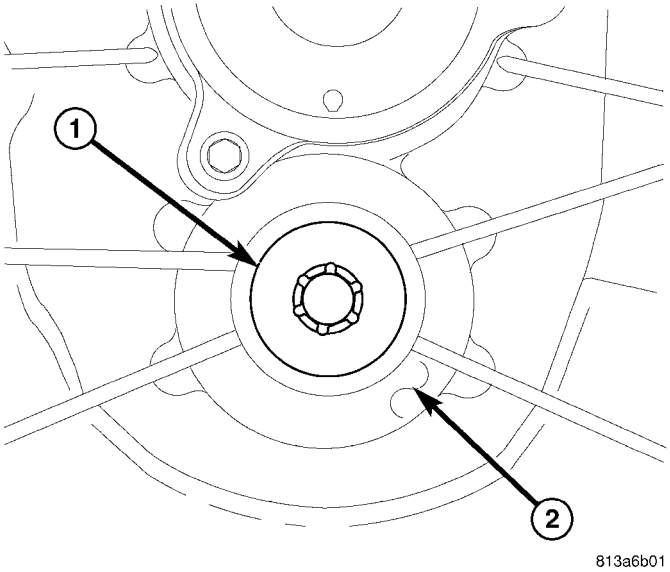

Fig. 116 COUNTERSHAFT BOLT

1 - COUNTERSHAFT BOLT
2 - FRONT HOUSING

(17) Install countershaft bolt (1) (Fig. 116) into the front housing (2) and tighten to 100 N·m (74 ft. lbs.).

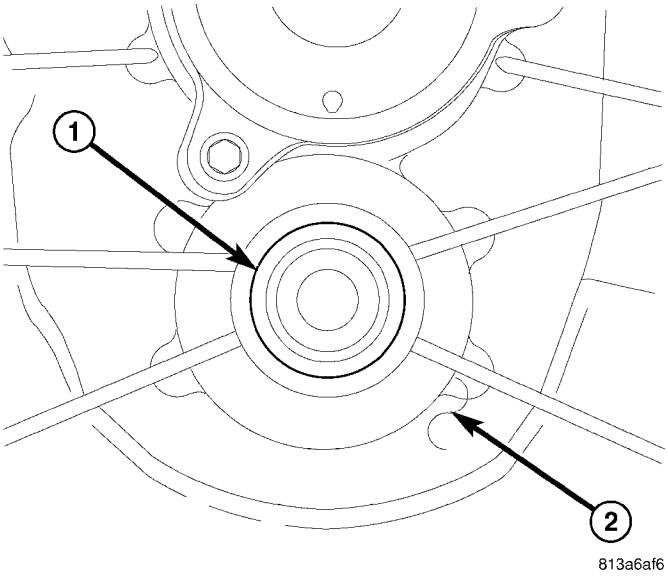

Fig. 117 COUNTERSHAFT PLUG

1 - COUNTERSHAFT PLUG
2 - FRONT HOUSING

(18) Install countershaft plug (1) (Fig. 117) in front housing (2) with Installer 7829-A and Handle C-4171.

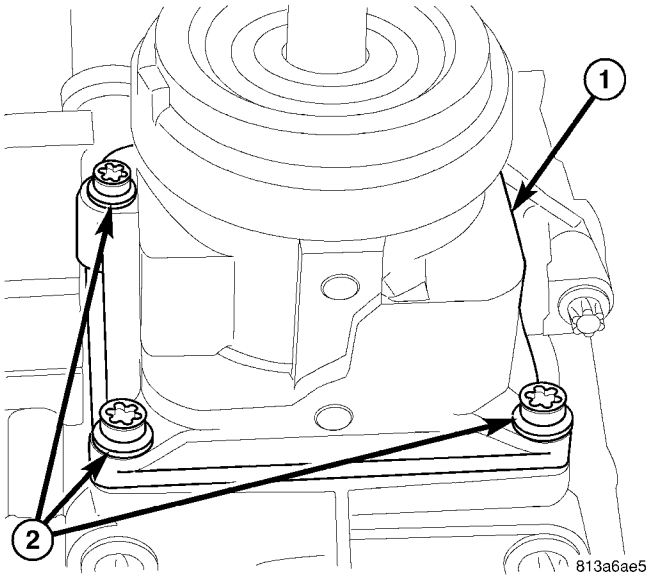

Fig. 118 SHIFT TOWER

1 - SHIFT TOWER
2 - BOLTS

(19) Move shift rails to neutral.

(20) Apply MOPAR® Gasket Maker to shift tower.

(21) Install shift tower (1) (Fig. 118) and tighten bolts (2) to 14 N·m (10 ft. lbs.).

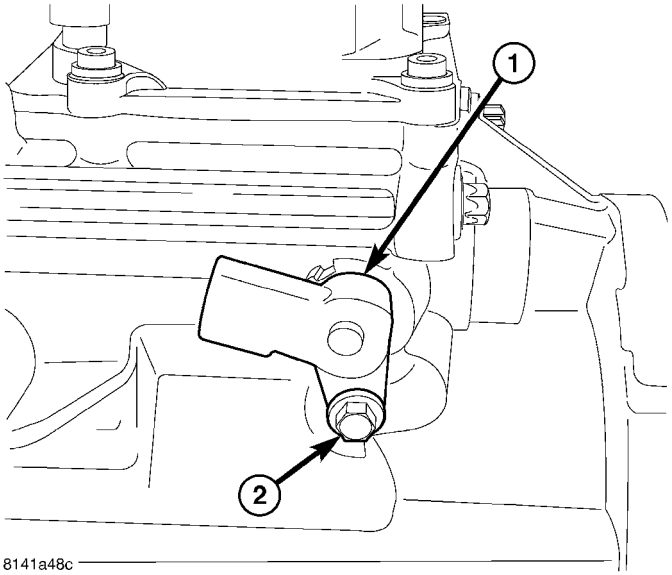

Fig. 119 BACK-UP LAMP SWITCH

1 - SWITCH
2 - BOLTS

(22) Install back up lamp switch (1) and bolt (2) (Fig. 119).

INSTALLATION

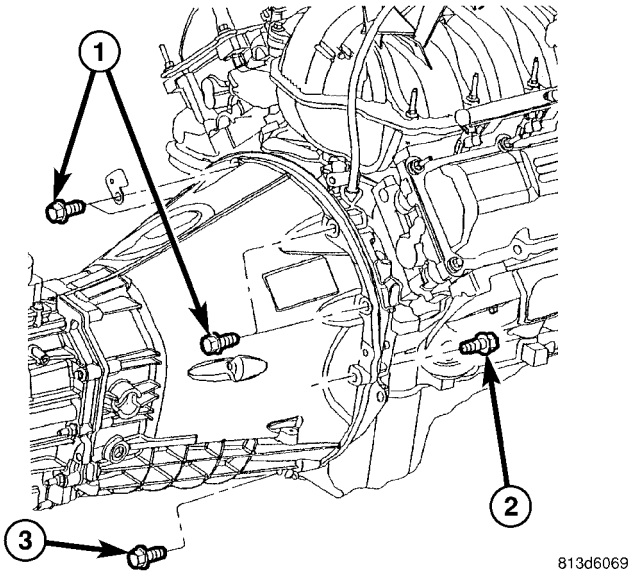

Fig. 120 3.7L ENGINE

1 - 41 N·m (30 ft. lbs.)
2 - 67 N·m (50 ft. lbs.)
3 - 54 N·m (40 ft. lbs.)

(1) Install transmission on engine.

(2) On 3.7L engine tighten bolts (1) (Fig. 120) to 41 N·m (30 ft. lbs.). Tighten bolts (2) to 67 N·m (50 ft. lbs.). Tighten bolts (3) to 54 N·m (40 ft. lbs.).

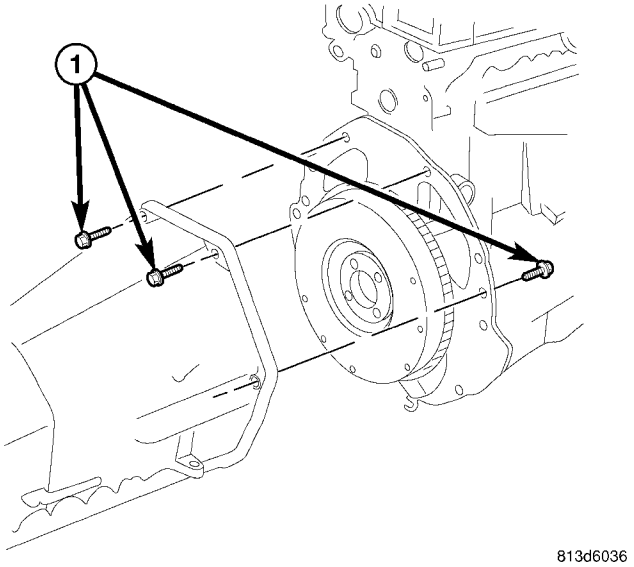

Fig. 121 2.4L ENGINE

1 - 75 N·m (55 ft. lbs.)

(3) On 2.4L engine tighten bolts (1) (Fig. 121) to 75 N·m (55 ft. lbs.). Install lower dust shield and tighten bolts to 34 N·m (25 ft. lbs.)

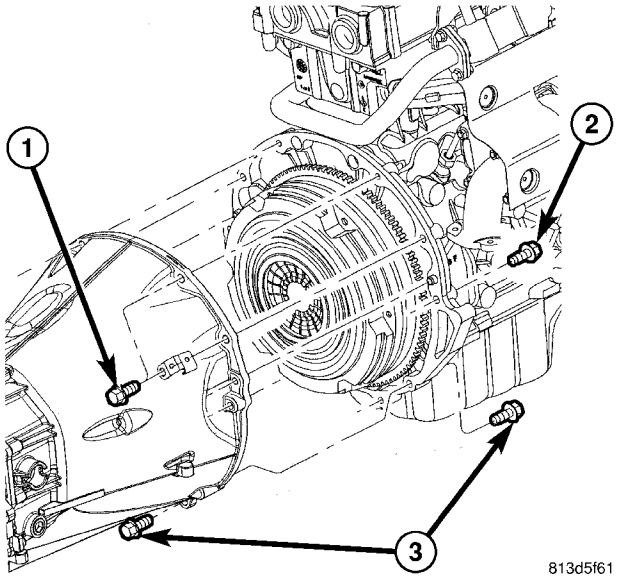

Fig. 122 2.8L DIESEL ENGINE

1 - 41 N·m (30 ft. lbs.)
2 - 67 N·m (50 ft. lbs.)
3 - 54 N·m (40 ft. lbs.)

(4) On 2.8L diesel engine tighten bolts (1) (Fig. 122) to 41 N·m (30 ft. lbs.). Tighten bolts (2) to 67 N·m (50 ft. lbs.). Tighten bolts (3) to 54 N·m (40 ft. lbs.).

MANUAL TRANSMISSION - NSG370 (Continued)

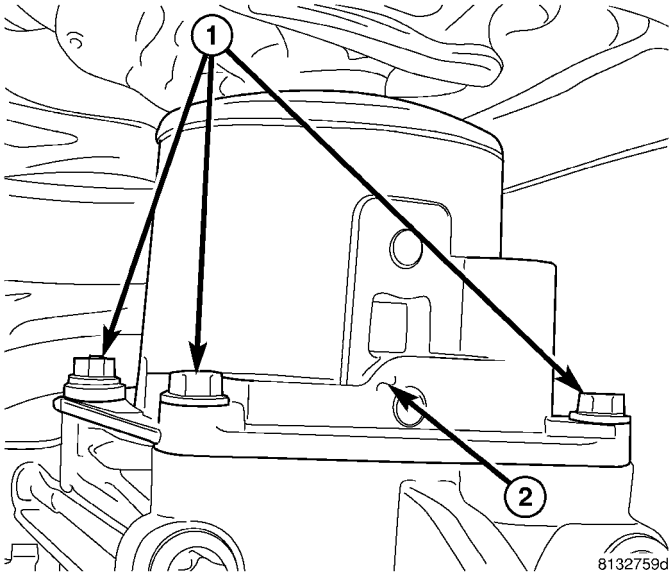

Fig. 123 SHIFT LEVER

1 - SHIFT LEVER TOWER BOLTS
2 - SHIFT LEVER HOUSING

(5) Clean shift tower and mating surface then apply Mopar Gasket Maker to shift tower.

(6) Install shift tower (2) (Fig. 123) and tighten bolts (1) to 10 N·m (7 ft. lbs.).

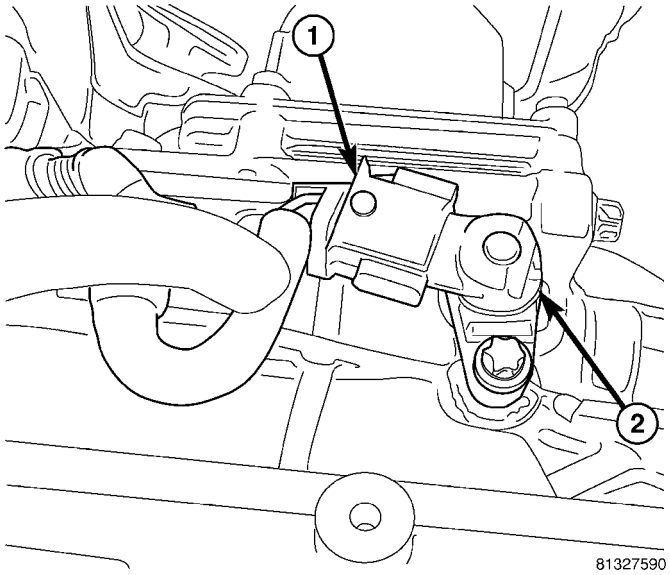

Fig. 124 BACKUP LAMP SWITCH

1 - BACKUP LAMP SWITCH
2 - WIRING CONNECTOR

(7) Install brackup lamp (2) (Fig. 124) wiring connector (1).

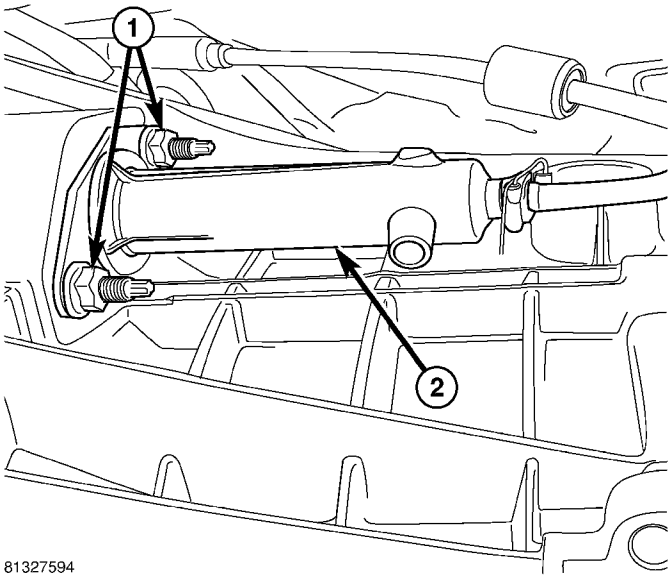

Fig. 125 CLUTCH SLAVE CYLINDER

1 - CLUTCH SLAVE CYLINDER NUTS
2 - CLUTCH SLAVE CYLINDER

(8) Install clutch slave cylinder (2) (Fig. 125) and mounting nuts (1).

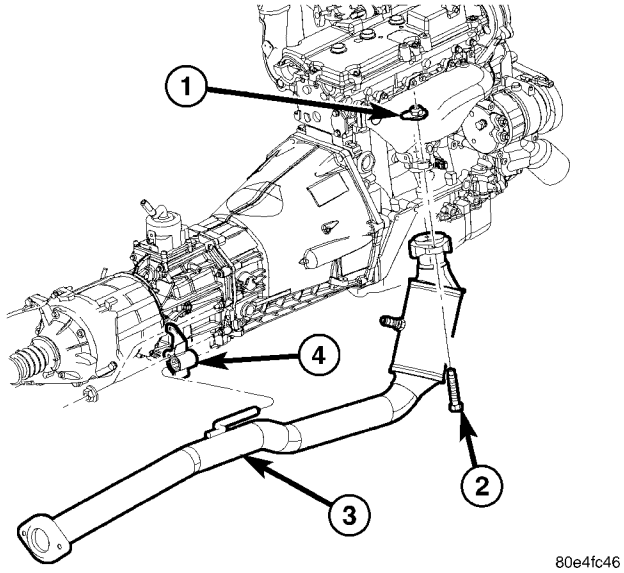

Fig. 126 2.4L CATALYST ASSEMBLY - 4x4

1- FLANGED NUT
2- CATALYST ASSEMBLY
3- BOLT
4- HANGER
5- NUT

(9) Install catalyst assembly (2) (Fig. 126) on 2.4L engine.

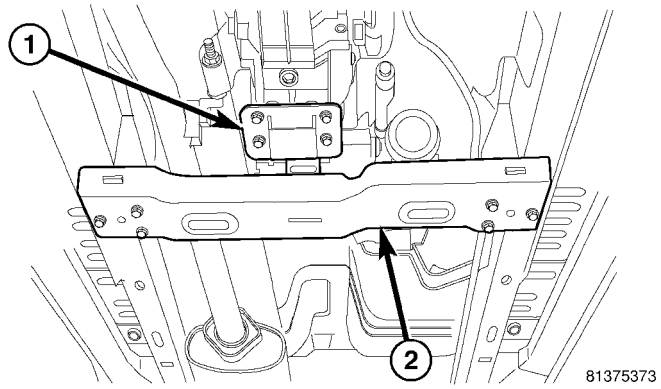

Fig. 127 2.4 L TRANSMISSION MOUNT

1 - TRANSMISSION MOUNT
2 - CROSSMEMBER

(10) Install transmission crossmember (2) (Fig. 127) and tighten bolts to 47 N·m (35 ft. lbs.). Install transmission mount (1) bolts and tighten to 47 N·m (35 ft. lbs.).

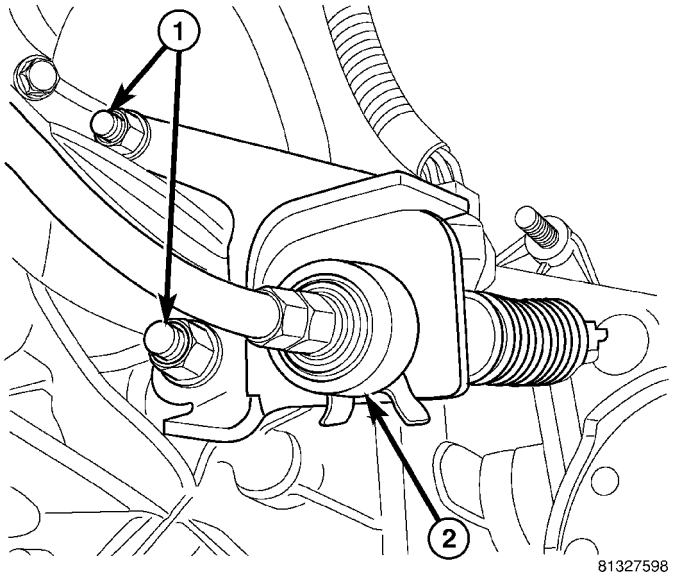

Fig. 128 2.4L TRANSFER CASE CABLE

1 - BRACKET NUTS
2 - CABLE

(11) Install transfer case, if equipped.

(12) Install transfer case shift cable (1) (Fig. 128) on 2.4L. Install transfer case shift linkage on 3.7L.

(13) Install transfer case wiring connector and vent hose.

(14) Install propeller shaft/shafts with reference marks aligned.

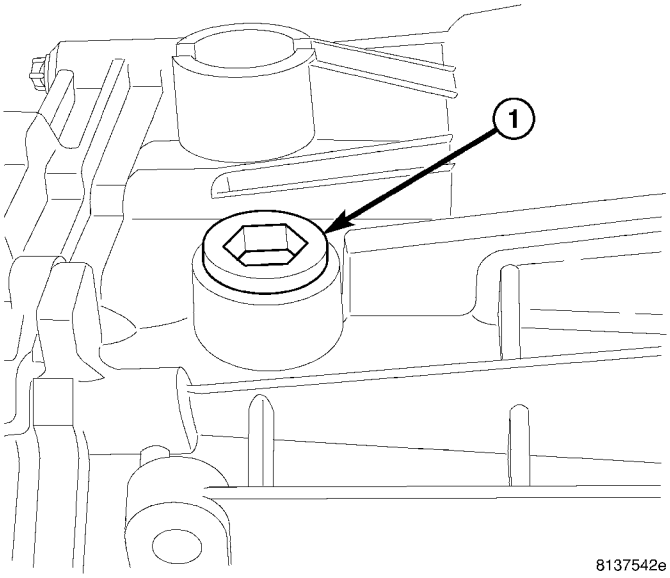

Fig. 129 FILL PLUG

1 - FILL PLUG

(15) Remove fill plug (1) (Fig. 129) and fill transmission withn lubricant.

MANUAL TRANSMISSION - NSG370 (Continued)

SPECIFICATIONS - NSG370

TORQUE SPECIFICATIONS

DESCRIPTION	N·m	Ft. Lbs.	In. Lbs.
Drain Plug	30	22	-
Fill Plug	30	22	-
Shift Tower Bolts	14	10	-
Housing Bolts	28	20	-
Transmission Mounting Bolts	38	28	-
Input Shaft Retainer Bolts	9	-	80
Bearing Retainer Bolts	10	-	88
Shift Rail Support Bolts	8	-	71
Idler Gear Shaft Bolt	20	15	-
Countershaft Bolt	100	74	-

SPECIAL TOOLS

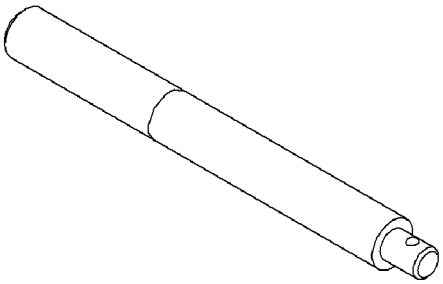

HANDLE C-4171

HUB INSTALLER W-262

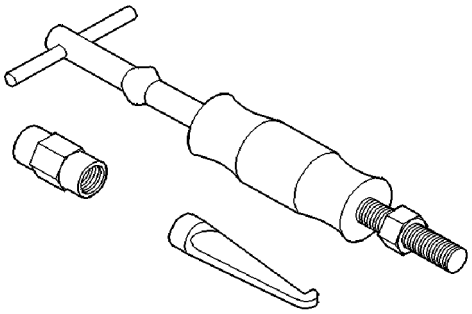

SLIDE HAMMER C-637

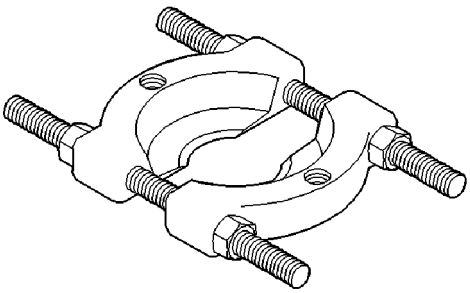

BEARING SPLITTER 1130

MANUAL TRANSMISSION - NSG370 (Continued)

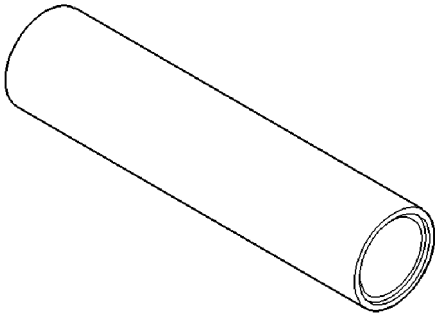

BEARING INSTALLER 6448A

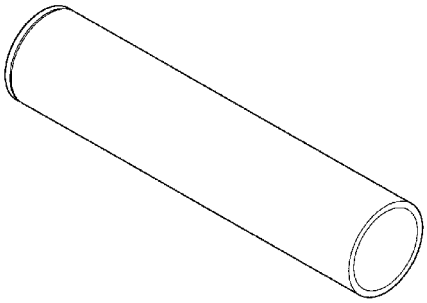

HUB INSTALLER 8228

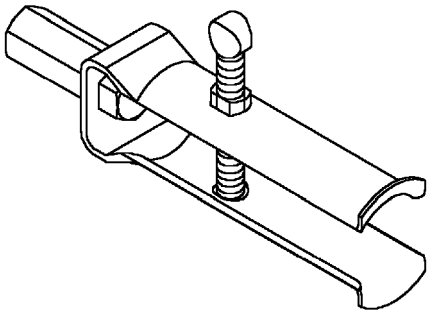

BEARING REMOVER 7794-A

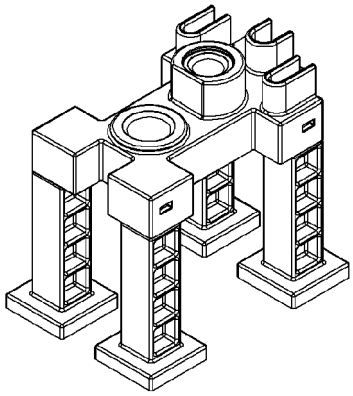

BUILD FIXTURE 9633

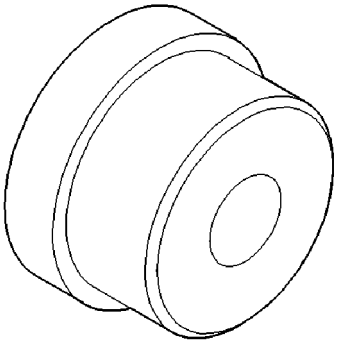

PLUG INSTALLER 7829-A

MANUAL TRANSMISSION - NSG370 (Continued)

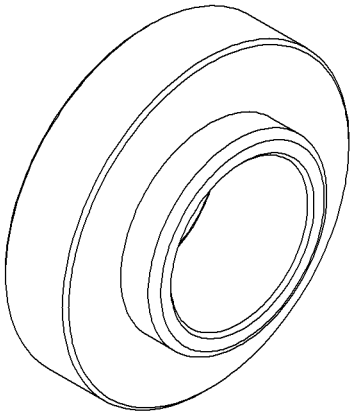

SEAL INSTALLER 9635

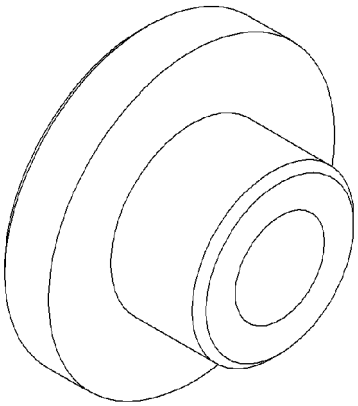

BEARING INSTALLER 9643

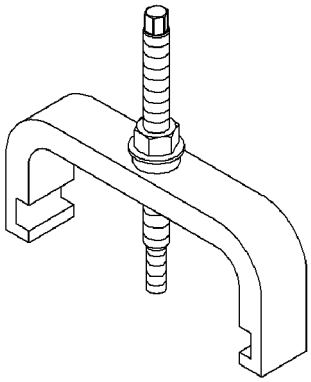

SHAFT REMOVER/INSTALLER 9636

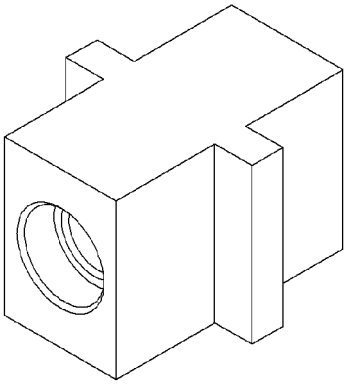

MAINSHAFT BUILD FIXTURE 9648

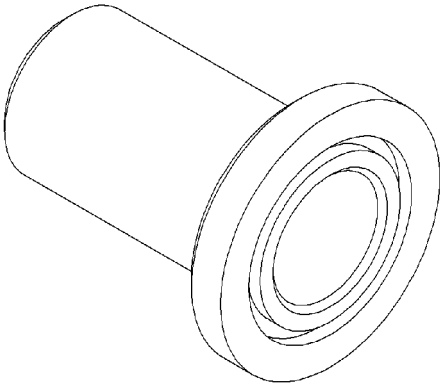

SEAL INSTALLER 9638

AUTOMATIC TRANSMISSION - 42RLE

TABLE OF CONTENTS

page

AUTOMATIC TRANSMISSION - 42RLE
DESCRIPTION 39
OPERATION 41
DIAGNOSIS AND TESTING
AUTOMATIC TRANSMISSION 47
ROAD TEST 47
HYDRAULIC PRESSURE TESTS 48
CLUTCH AIR PRESSURE TESTS 51
FLUID LEAKAGE 51
STANDARD PROCEDURE - ALUMINUM
THREAD REPAIR 52
REMOVAL 52
DISASSEMBLY 54
ASSEMBLY 70
INSTALLATION 86
SCHEMATICS AND DIAGRAMS - 42RLE
TRANSMISSION 89
SPECIFICATIONS
42RLE AUTOMATIC TRANSMISSION 102
SPECIAL TOOLS
42RLE AUTOMATIC TRANSMISSION 103
ACCUMULATOR
DESCRIPTION 107
OPERATION 107
ADAPTER HOUSING SEAL
REMOVAL 107
INSTALLATION 107
BEARINGS
ADJUSTMENTS
BEARING ADJUSTMENT PROCEDURES . . . 108
BRAKE TRANSMISSION SHIFT INTERLOCK MECHANISM
DESCRIPTION 108
OPERATION 108
DIAGNOSIS AND TESTING - BRAKE
TRANSMISSION SHIFT INTERLOCK
SYSTEM 108
DRIVING CLUTCHES
DESCRIPTION 108
OPERATION 108
EXTENSION HOUSING SEAL
REMOVAL 109
INSTALLATION 109
FLUID AND FILTER
DIAGNOSIS AND TESTING
DIAGNOSIS AND TESTING - CAUSES OF
BURNT FLUID 110
EFFECTS OF INCORRECT FLUID LEVEL . . 110
FLUID CONTAMINATION 110
STANDARD PROCEDURE
FLUID LEVEL CHECK 110
FLUID/FILTER SERVICE 111
STANDARD PROCEDURE - TRANSMISSION
FILL 112
GEARSHIFT CABLE
DIAGNOSIS AND TESTING
GEARSHIFT CABLE 112
REMOVAL 113
INSTALLATION 114
ADJUSTMENTS - GEARSHIFT CABLE 114
HOLDING CLUTCHES
DESCRIPTION 115
OPERATION 115
INPUT CLUTCHASSEMBLY
DISASSEMBLY 116
ASSEMBLY 123
INPUT SPEED SENSOR
DESCRIPTION 132
OPERATION 132
REMOVAL 133
INSTALLATION 133
OIL PUMP
DESCRIPTION 133
OPERATION 134
DISASSEMBLY 134
ASSEMBLY 135
OUTPUT SPEED SENSOR
DESCRIPTION 135
OPERATION 135
REMOVAL 135
INSTALLATION 136
OVERDRIVE SWITCH
DESCRIPTION 136
OPERATION 136
PARK INTERLOCK CABLE
REMOVAL 136
INSTALLATION 137
ADJUSTMENTS - PARK-INTERLOCK CABLE . 137
PLANETARY GEARTRAIN
DESCRIPTION 138
OPERATION 138
OIL PUMP SEAL
REMOVAL 138
INSTALLATION 138
SHIFT MECHANISM
DESCRIPTION 139
OPERATION 139
REMOVAL 139
INSTALLATION 140

SOLENOID
DESCRIPTION 140
OPERATION 141
SOLENOID/PRESSURE SWITCH ASSY
DESCRIPTION 141
OPERATION 141
REMOVAL 142
INSTALLATION 143
TORQUE CONVERTER
DESCRIPTION 143
OPERATION 147
REMOVAL 148
INSTALLATION 148
TRANSMISSION CONTROL RELAY
DESCRIPTION 148
OPERATION 149
TRANSMISSION RANGE SENSOR
DESCRIPTION 149
OPERATION 149
REMOVAL 150
INSTALLATION 150
SENSOR-TRANSMISSION TEMPERATURE
DESCRIPTION 151
OPERATION 151
VALVE BODY
DESCRIPTION 151
OPERATION 152
REMOVAL 155
DISASSEMBLY 157
ASSEMBLY 162
INSTALLATION 166

AUTOMATIC TRANSMISSION - 42RLE

DESCRIPTION

The 42RLE (Fig. 1) is a four-speed transmission that is a conventional hydraulic/mechanical assembly controlled with adaptive electronic controls and monitors. The hydraulic system of the transmission consists of the transmission fluid, fluid passages, hydraulic valves, and various line pressure control components. An input clutch assembly which houses the underdrive, overdrive, and reverse clutches is used. It also utilizes separate holding clutches: 2nd/4th gear and Low/Reverse. The primary mechanical components of the transmission consist of the following:

- Three multiple disc input clutches
- Two multiple disc holding clutches
- Four hydraulic accumulators
- Two planetary gear sets
- Hydraulic oil pump
- Valve body
- Solenoid/Pressure switch assembly

Control of the transmission is accomplished by fully adaptive electronics. Optimum shift scheduling is accomplished through continuous real-time sensor feedback information provided to the Transmission Control Module (TCM) portion of the Powertrain Control Module (PCM).

The TCM is the heart of the electronic control system and relies on information from various direct and indirect inputs (sensors, switches, etc.) to determine driver demand and vehicle operating conditions. With this information, the TCM can calculate and perform timely and quality shifts through various output or control devices (solenoid pack, transmission control relay, etc.).

The TCM also performs certain self-diagnostic functions and provides comprehensive information (sensor data, DTC's, etc.) which is helpful in proper diagnosis and repair. This information can be viewed with the scan tool.

AUTOMATIC TRANSMISSION - 42RLE (Continued)

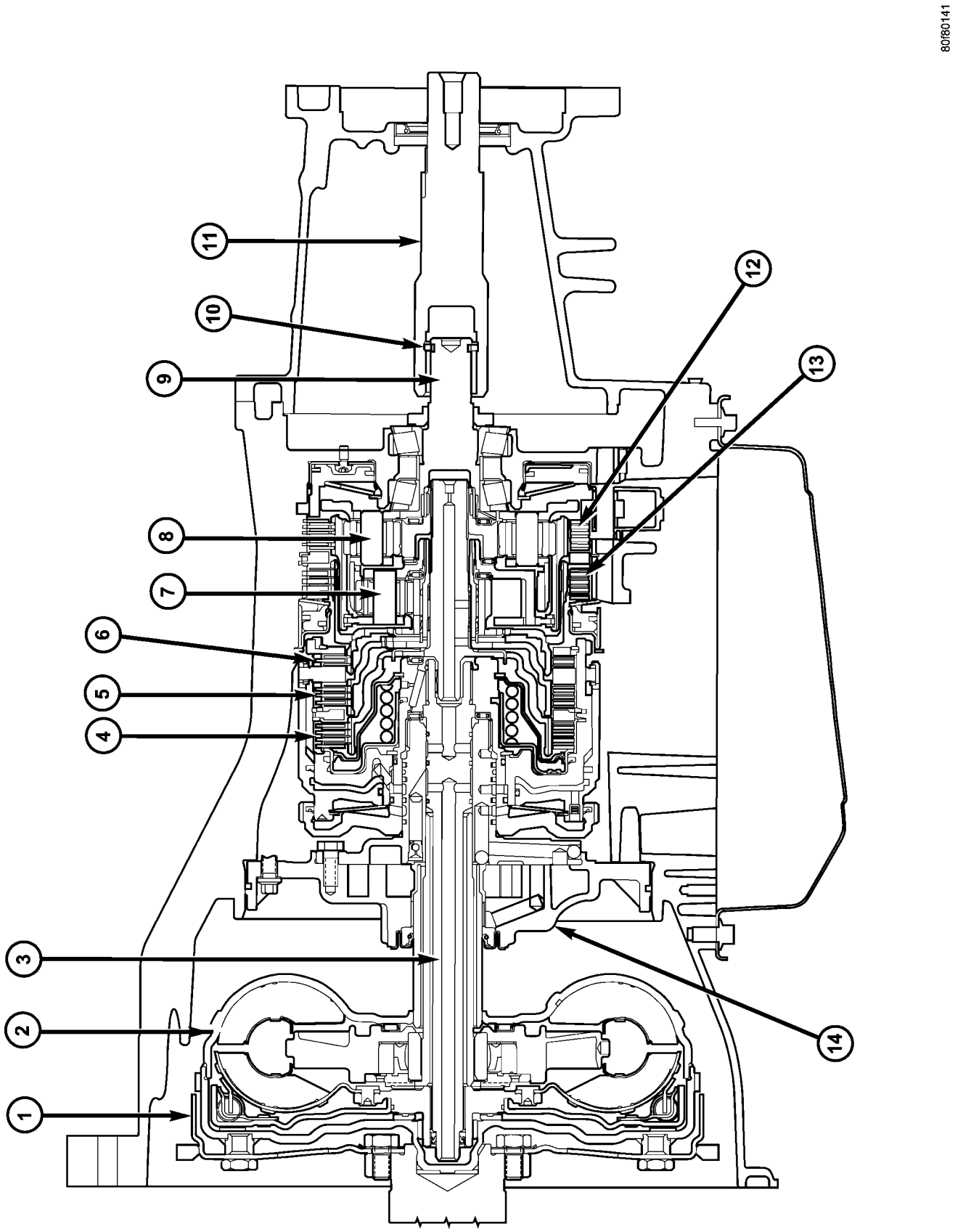

Fig. 1 42RLE Automatic Transmission

AUTOMATIC TRANSMISSION - 42RLE (Continued)

1 - DRIVEPLATE
2 - TORQUE CONVERTER
3 - INPUT SHAFT
4 - UNDERDRIVE CLUTCH
5 - OVERDRIVE CLUTCH
6 - REVERSE CLUTCH
7 - FRONT PLANET CARRIER
8 - REAR PLANET CARRIER
9 - OUTPUT SHAFT
10 - SNAP RING
11 - STUB SHAFT
12 - LOW/REVERSE CLUTCH
13 - 2/4 CLUTCH
14 - OIL PUMP

TRANSMISSION IDENTIFICATION

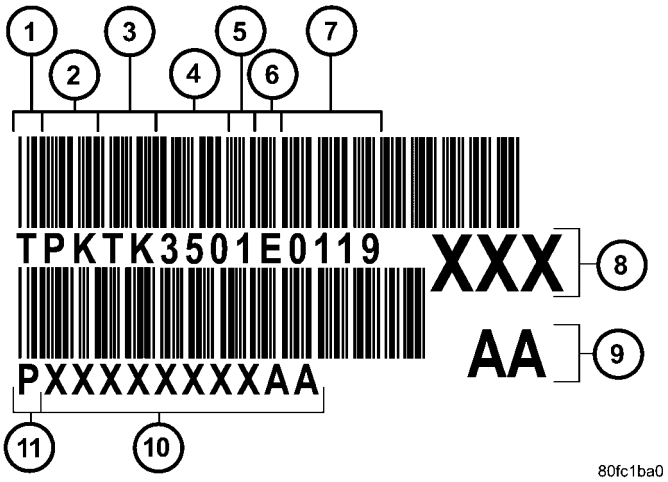

Fig. 2 Identification Label Breakdown

1 - T=TRACEABILITY
2 - SUPPLIER CODE (PK=KOKOMO)
3 - COMPONENT CODE (TK=KOKOMO TRANSMISSION)
4 - BUILD DAY (350=DEC. 15)
5 - BUILD YEAR (1=2001)
6 - ASSEMBLY LINE CODE
7 - BUILD SEQUENCE NUMBER
8 - LAST THREE OF P/N
9 - CHANGE LEVEL
10 - TRANSMISSION PART NUMBER
11 - P=PART NUMBER

The 42RLE transmission can be identified by a barcode label that is affixed to the upper left area of the bellhousing.

The label contains a series of digits that can be translated into useful information such as transmission part number (10), date of manufacture (4, 5), manufacturing origin (2), assembly line identifier (6), build sequence number (7), etc. (Fig. 2).

If the tag is not legible or is missing, the “PK” number, which is stamped into the left rear flange of the transmission case, can be referred to for identification. The entire part number, build code, and sequence number are stamped into the flange.

OPERATION

The 42RLE transmission ratios are:

First	2.84 : 1
Second	1.57 : 1
Third	1.00 : 1
Overdrive	0.69 : 1
Reverse	2.21 : 1

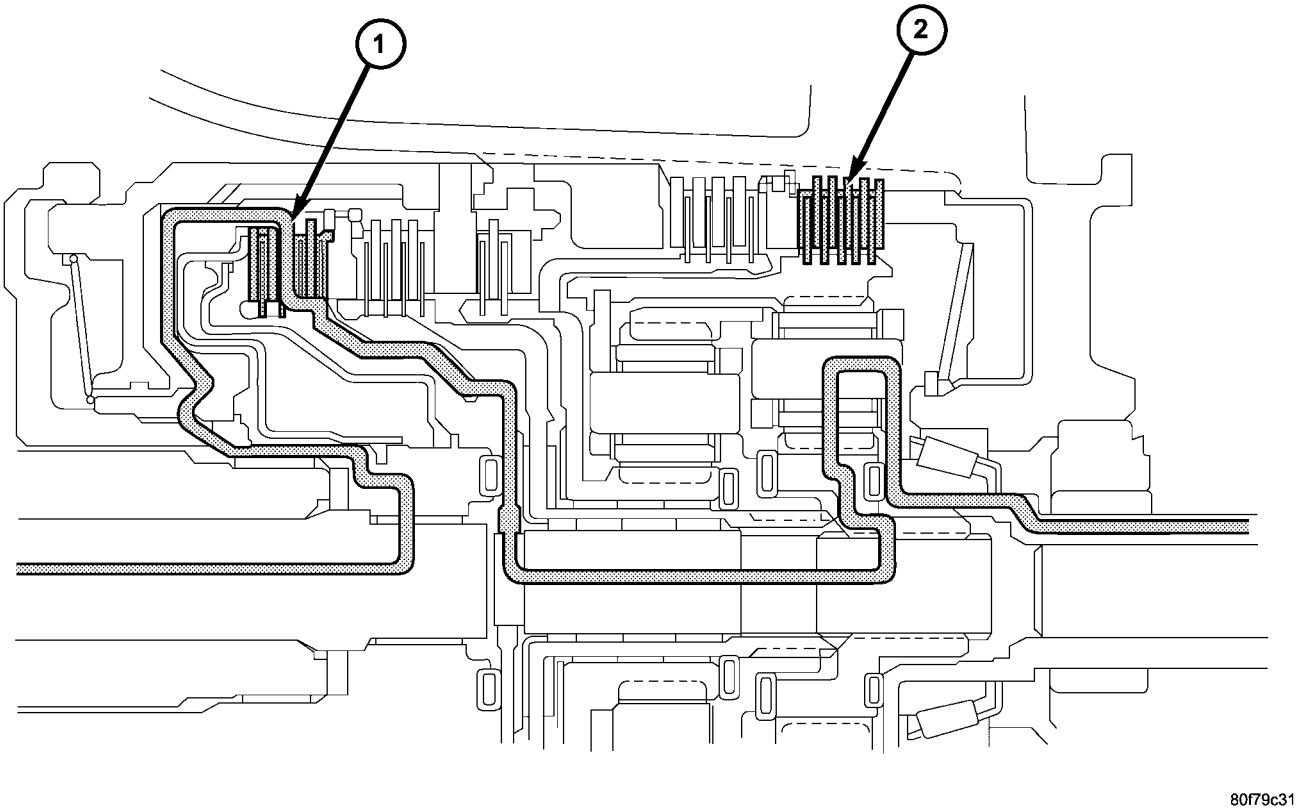

Fig. 3 First Gear Powerflow

1 - UNDERDRIVE CLUTCH APPLIED (Turns Rear Sun)
2 - LOW-REVERSE CLUTCH APPLIED (Holds Rear Annulus/Front Carrier)

FIRST GEAR POWERFLOW

In first gear range, torque input is through the underdrive clutch (1) (Fig. 3) to the underdrive hub assembly. The underdrive hub is splined to the rear sun gear. When the underdrive clutch is applied, it rotates the underdrive hub and rear sun gear. The L/R clutch (2) is applied to hold the front carrier/rear annulus assembly. The rear sun gear drives the rear planetary pinion gears. The rear planetary pinion gears are forced to walk around the inside of the stationary rear annulus gear. The pinions are pinned to the rear carrier and cause the rear carrier assembly to rotate as they walk around the annulus gear. This provides the torque output for first gear. The other planetary gearset components are freewheeling. The first gear ratio is 2.84:1.

AUTOMATIC TRANSMISSION - 42RLE (Continued)

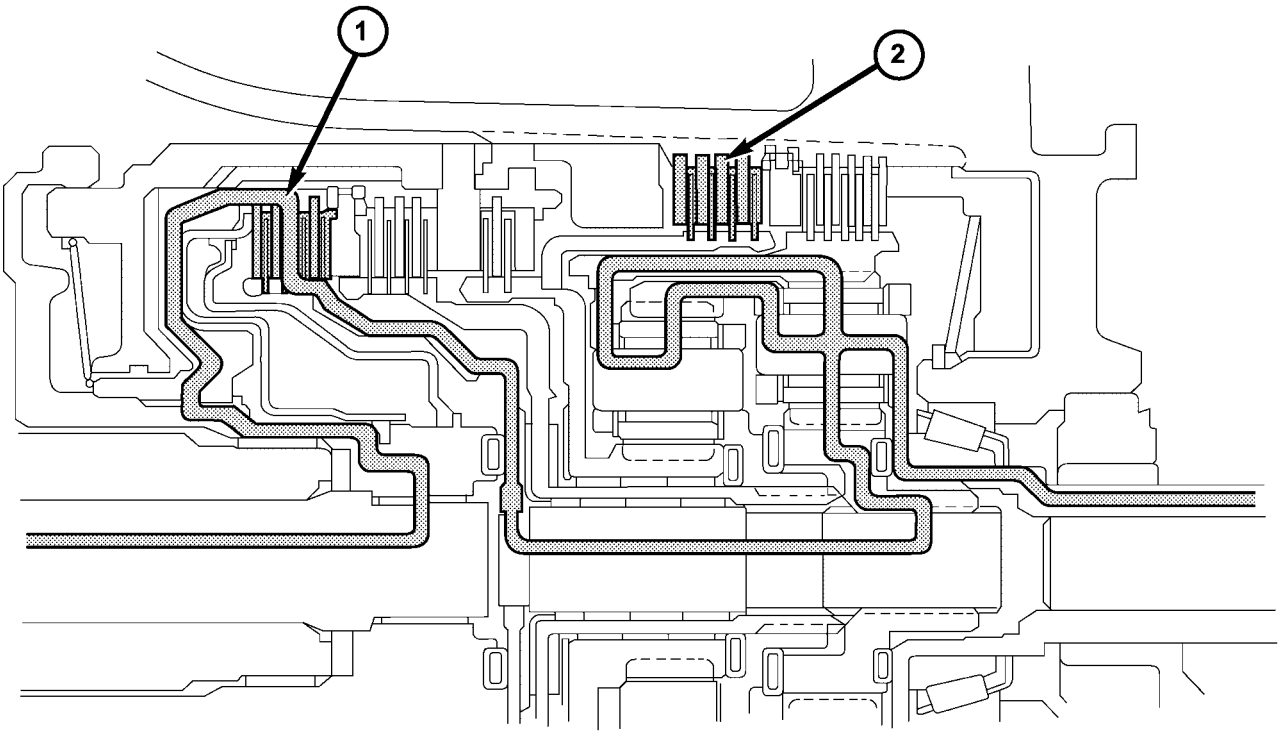

80f79edd

Fig. 4 Second Gear Powerflow

1 - UNDERDRIVE CLUTCH APPLIED (Turns Rear Sun)
2 - 2-4 CLUTCH APPLIED (Holds Front Sun)

SECOND GEAR POWERFLOW

Second gear is achieved by having both planetary gear sets (Fig. 4) contribute to torque multiplication. As in first gear, torque input is through the underdrive clutch (1) to the rear sun gear. The 2/4 clutch (2) is applied to hold the front sun gear stationary. The rotating rear sun gear turns the rear planetary pinions. The rear pinions rotate the rear annulus/front carrier assembly. The pinions of the front carrier walk around the stationary front sun gear. This transmits torque to the front annulus/rear carrier assembly, which provides output torque and a gear ratio of 1.57:1.

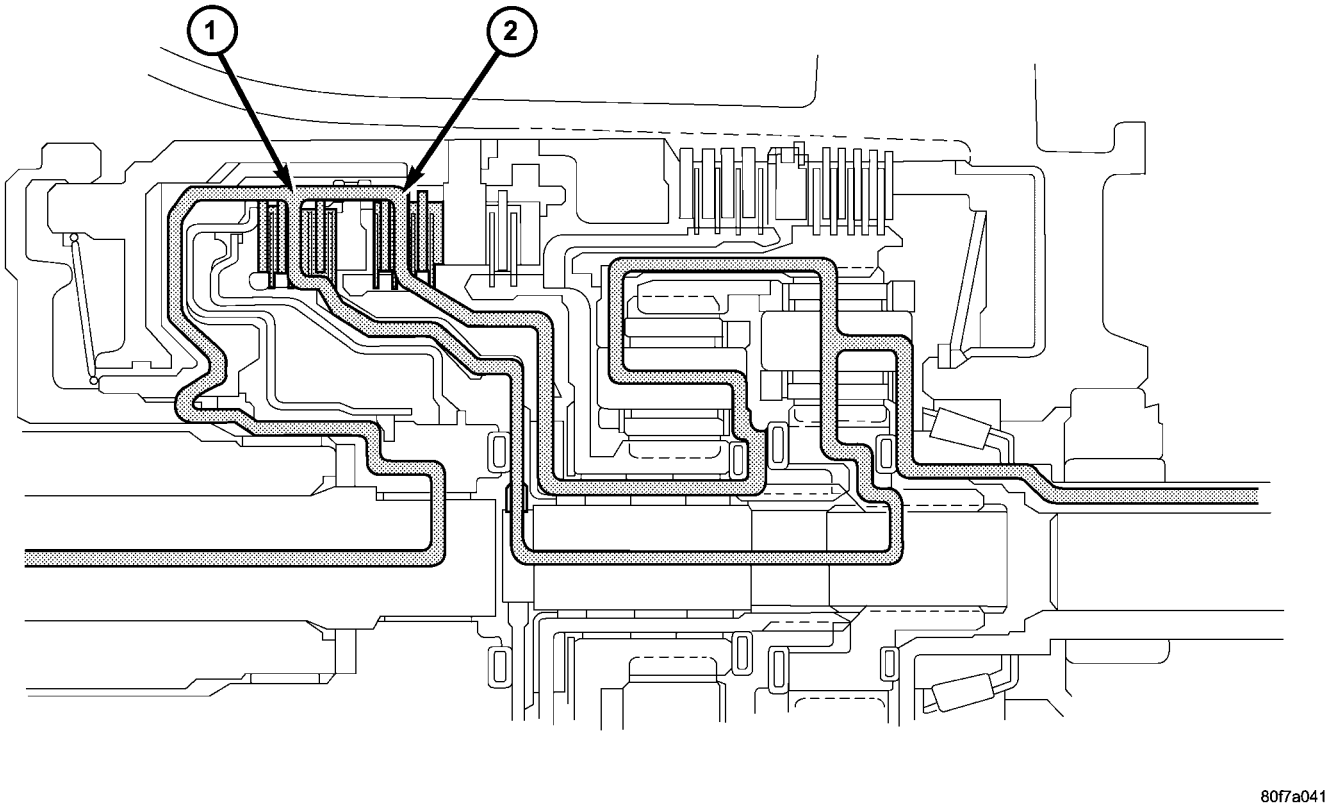

Fig. 5 Third Gear Powerflow

1 - UNDERDRIVE CLUTCH APPLIED (Turns Rear Sun)
2 - OVERDRIVE CLUTCH APPLIED (Turns Front Carrier/Rear Annulus)

THIRD GEAR POWERFLOW

In third gear, two input clutches are applied to provide torque input: the underdrive clutch (1) (Fig. 5) and overdrive clutch (2). The underdrive clutch rotates the rear sun gear, while the overdrive clutch rotates the front carrier/rear annulus assembly. The result is two components (rear sun gear and rear annulus gear) rotating at the same speed and in the same direction. This effectively locks the entire planetary gearset together and is rotated as one unit. The gear ratio in third is 1:1.

AUTOMATIC TRANSMISSION - 42RLE (Continued)

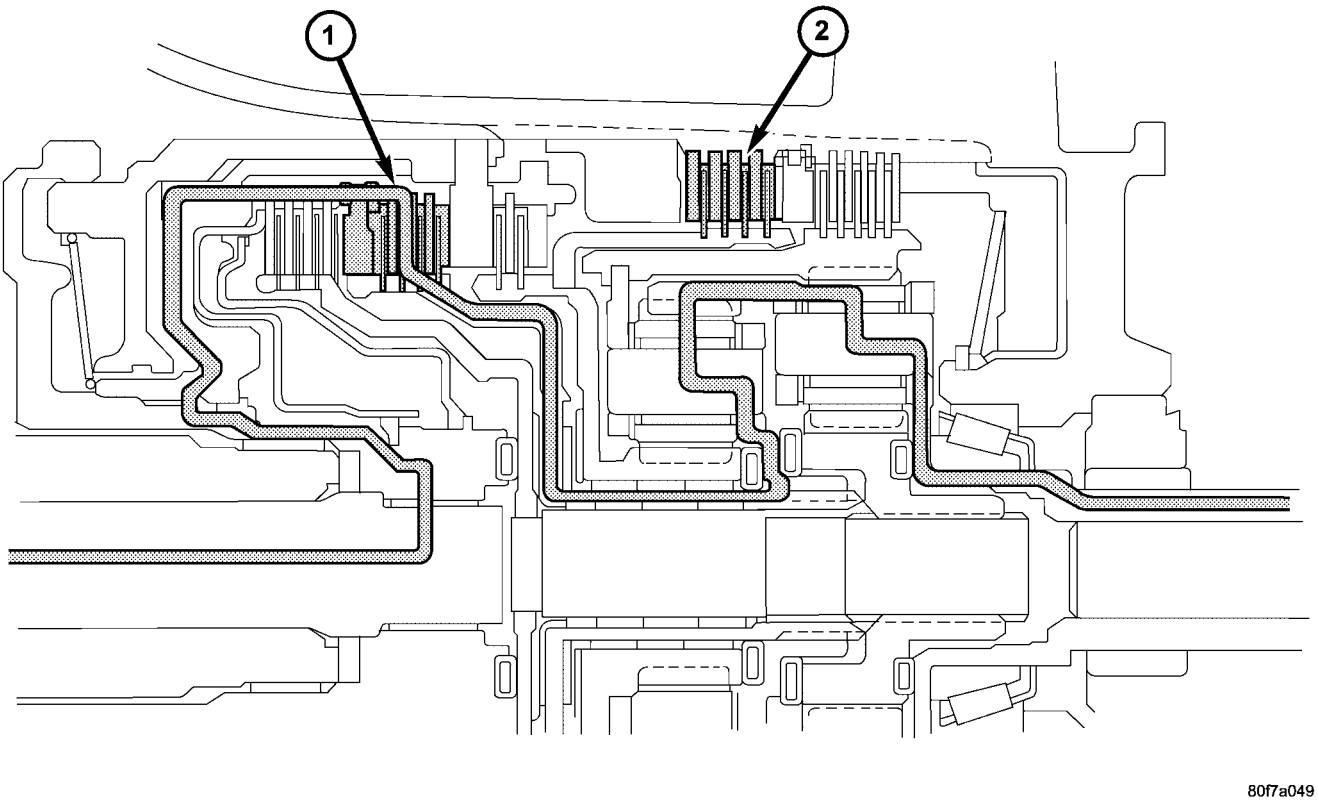

Fig. 6 Fourth Gear Powerflow

1 - OVERDRIVE CLUTCH APPLIED (Turns Rear Sun)
2 - 2-4 CLUTCH APPLIED (Holds Front Sun)

FOURTH GEAR POWERFLOW

In fourth gear input torque is through the overdrive clutch (1) (Fig. 6) which drives the front carrier. The 2/4 clutch (2) is applied to hold the front sun gear. As the overdrive clutch rotates the front carrier, it causes the pinions of the front carrier to walk around the stationary front sun gear. This causes the front carrier pinions to turn the front annulus/rear carrier assembly which provides output torque. In fourth gear, transmission output speed is more than engine input speed. This situation is called overdrive and the gear ratio is 0.69:1.

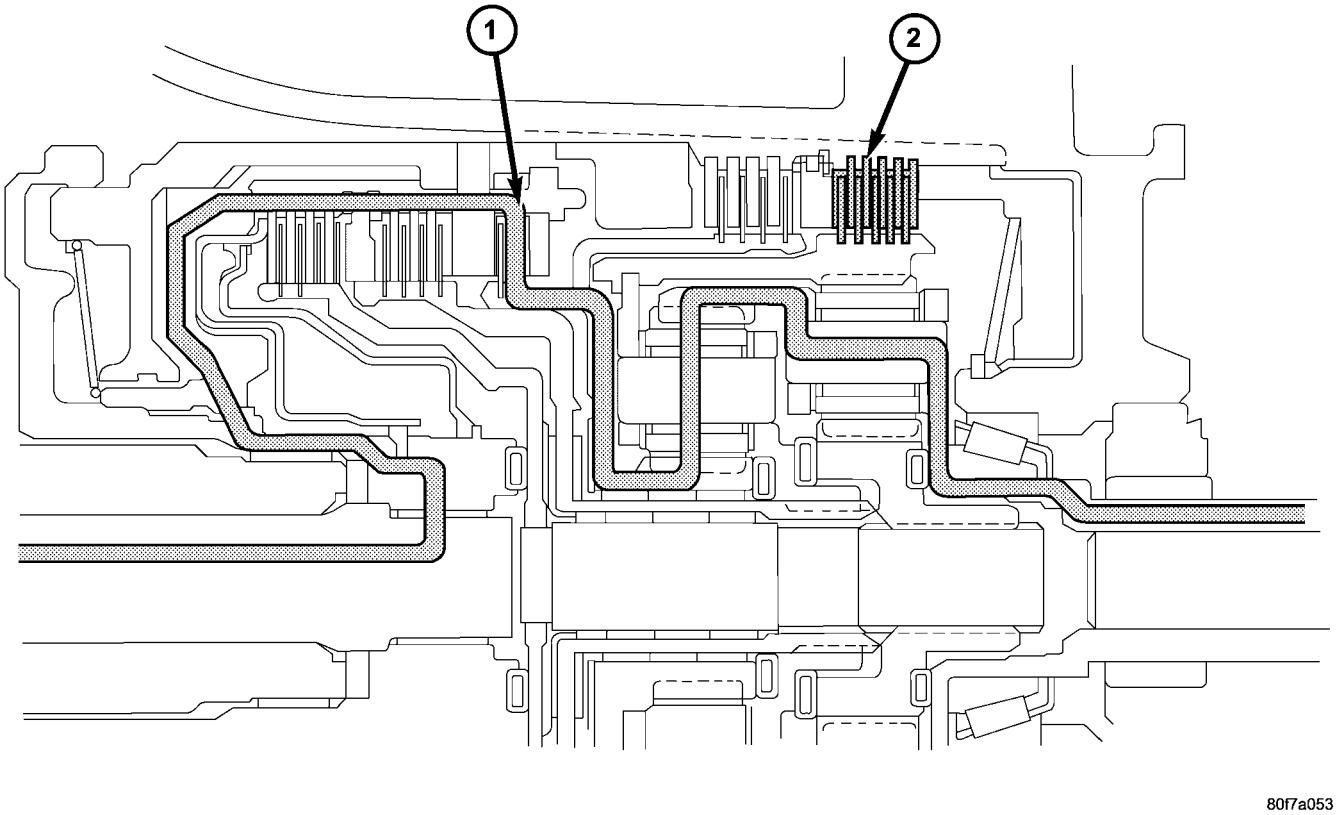

Fig. 7 Reverse Gear Powerflow

1 - LOW-REVERSE CLUTCH APPLIED (Holds Rear Annulus Front Carrier)
2 - REVERSE CLUTCH APPLIED (Turns Front Sun)

REVERSE GEAR POWERFLOW

In reverse, input (Fig. 7) power is through the reverse clutch (1). When applied, the reverse clutch drives the front sun gear through the overdrive hub and shaft. The L/R clutch (2) is applied to hold the front carrier/rear annulus assembly stationary. The front carrier is being held by the L/R clutch so the pinions are forced to rotate the front annulus/rear carrier assembly in the reverse direction. Output torque is provided, in reverse, with a gear ratio of 2.21:1.

AUTOMATIC TRANSMISSION - 42RLE (Continued)

DIAGNOSIS AND TESTING

AUTOMATIC TRANSMISSION

CAUTION: Before attempting any repair on the 42RLE Four Speed Automatic Transmission, always check for proper shift cable adjustment. Also check for diagnostic trouble codes with the scan tool and the 42RLE Transmission Diagnostic information.

42RLE automatic transmission malfunctions may be caused by these general conditions:

- Poor engine performance
- Improper adjustments
- Hydraulic malfunctions
- Mechanical malfunctions
- Electronic malfunctions

When diagnosing a problem always begin with recording the complaint. The complaint should be defined as specific as possible. Include the following checks:

- Temperature at occurrence (cold, hot, both)
- Dynamic conditions (acceleration, deceleration, upshift, cornering)
- Elements in use when condition occurs (what gear is transmission in during condition)
- Road and weather conditions
- Any other useful diagnostic information.

After noting all conditions, check the easily accessible variables:

- Fluid level and condition
- Shift cable adjustment
- Diagnostic trouble code inspection

Then perform a road test to determine if the problem has been corrected or that more diagnosis is necessary. If the problem exists after the preliminary tests and corrections are completed, hydraulic pressure checks should be performed.

ROAD TEST

Prior to performing a road test, verify that the fluid level, fluid condition, and linkage adjustment have been approved.

During the road test, the transmission should be operated in each position to check for slipping and any variation in shifting.

If the vehicle operates properly at highway speeds, but has poor acceleration, the converter stator overrunning clutch may be slipping. If acceleration is normal, but high throttle opening is needed to maintain highway speeds, the converter stator clutch may have seized. Both of these stator defects require replacement of the torque converter and thorough transmission cleaning.

Slipping clutches can be isolated by comparing the “Elements in Use” chart with clutch operation encountered on a road test. This chart identifies which clutches are applied at each position of the selector lever.

A slipping clutch may also set a DTC and can be determined by operating the transmission in all selector positions.

AUTOMATIC TRANSMISSION - 42RLE (Continued)

ELEMENTS IN USE AT EACH POSITION OF SELECTOR LEVER

Shift Lever Position	INPUT CLUTCHES			HOLDING CLUTCHES	
	Underdrive	Overdrive	Reverse	2/4	Low/Reverse
P - PARK					X
R - REVERSE			X		X
N - NEUTRAL					X
OD - OVERDRIVE					
First	X				X
Second	X			X	
Direct	X	X			
Overdrive		X		X	
D - DRIVE*					
First	X				X
Second	X			X	
Direct	X	X			
L - LOW*					
First	X				X
Second	X			X	
Direct	X	X			
* Vehicle upshift and downshift speeds are increased when in these selector positions.					

The process of elimination can be used to detect any unit which slips and to confirm proper operation of good units. Road test analysis can diagnose slipping units, but the cause of the malfunction cannot be determined. Practically any condition can be caused by leaking hydraulic circuits or sticking valves.

HYDRAULIC PRESSURE TESTS

Pressure testing is a very important step in the diagnostic procedure. These tests usually reveal the cause of most transmission problems.

Before performing pressure tests, be certain that fluid level and condition, and shift cable adjustments have been checked and approved. Fluid must be at operating temperature (150 to 200 degrees F.).

Install an engine tachometer, raise vehicle on hoist which allows the wheels to turn, and position tachometer so it can be read.

Using special adapters L-4559, attach 300 psi gauge(s) C-3293SP to the port(s) required for test being conducted.

Test port locations are shown in the Pressure Taps graphic. (Fig. 8)

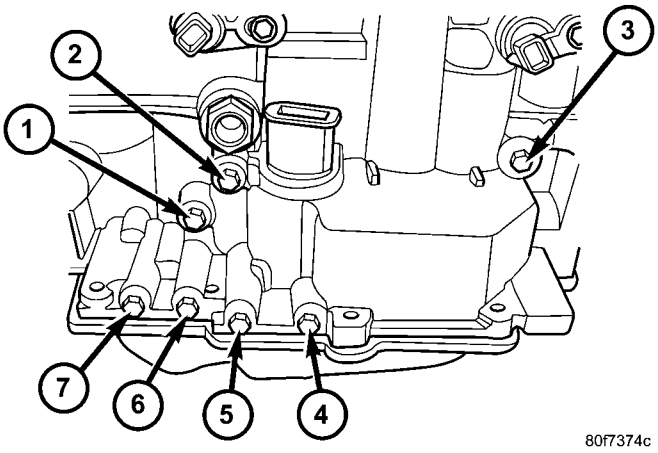

Fig. 8 Pressure Taps

1 - TORQUE CONVERTER CLUTCH OFF
2 - REVERSE
3 - LOW/REVERSE
4 - 2/4
5 - UNDERDRIVE
6 - TORQUE CONVERTER CLUTCH ON
7 - OVERDRIVE

AUTOMATIC TRANSMISSION - 42RLE (Continued)

TEST ONE - SELECTOR IN MANUAL 1 (1st Gear)

NOTE: This test checks pump output, pressure regulation and condition of the low/reverse clutch hydraulic circuit and shift schedule.

(1) Attach pressure gauge to the low/reverse clutch tap.
(2) Move selector lever to the MANUAL 1 position.
(3) Allow vehicle wheels to turn and increase throttle opening to achieve an indicated vehicle speed to 20 mph.
(4) Low/reverse clutch pressure should read 115 to 145 psi.

TEST TWO - SELECTOR IN MANUAL 2 (Second Gear)

NOTE: This test checks the underdrive clutch hydraulic circuit as well as the shift schedule.

(1) Attach gauge to the underdrive clutch tap.
(2) Move selector lever to the MANUAL 2 position.
(3) Allow vehicle wheels to turn and increase throttle opening to achieve an indicated vehicle speed of 30 mph.
(4) In second gear the underdrive clutch pressure should read 110 to 145 psi.

TEST TWO A - SELECTOR IN DRIVE (OD ON - Fourth Gear)

NOTE: This test checks the underdrive clutch hydraulic circuit as well as the shift schedule.

(1) Attach gauge to the underdrive clutch tap.
(2) Move selector lever to the DRIVE position. Verfy that the OD switch is ON.
(3) Allow wheels to rotate freely and increase throttle opening to achieve an indicated speed of 40 mph.
(4) Underdrive clutch pressure should read below 5 psi. If not, than either the solenoid assembly or controller is at fault.

TEST THREE - SELECTOR IN DRIVE (OD OFF - Third and Second Gear)

NOTE: This test checks the overdrive clutch hydraulic circuit as well as the shift schedule.

(1) Attach gauge to the overdrive clutch tap.
(2) Move selector lever to the DRIVE position.
(3) Allow vehicle wheels to turn and increase throttle opening to achieve an indicated vehicle speed of 20 mph.
(4) Overdrive clutch pressure should read 74 to 95 psi.
(5) Move selector lever to the DRIVE position and increase indicated vehicle speed to 30 mph.
(6) The vehicle should be in second gear and overdrive clutch pressure should be less than 5 psi.

TEST FOUR - SELECTOR IN DRIVE (OD ON - Fourth Gear)

NOTE: This test checks the 2/4 clutch hydraulic circuit.

(1) Attach gauge to the 2/4 clutch tap.
(2) Move selector lever to the DRIVE position.
(3) Allow vehicle front wheels to turn and increase throttle opening to achieve an indicated vehicle speed of 30 mph. Vehicle should be in fourth gear.
(4) The 2/4 clutch pressure should read 75 to 95 psi.

TEST FIVE-SELECTOR IN DRIVE (OD ON - Fourth Gear, CC on)

NOTE: These tests check the torque converter clutch hydraulic circuit.

(1) Attach gauge to the torque converter clutch off pressure tap.
(2) Move selector lever to the DRIVE position.
(3) Allow vehicle wheels to turn and increase throttle opening to achieve an indicated vehicle speed of 50 mph. Vehicle should be in 4th gear, CC on.

CAUTION: Both wheels must turn at the same speed.

(4) Torque converter clutch off pressure should be less than 5 psi.
(5) Now attach the gauge to the torque converter clutch on pressure tap.
(6) Move selector to the OD position.
(7) Allow vehicle wheels to turn and increase throttle opening to achieve an indicated vehicle speed of 50 mph.
(8) Verify the torque converter clutch is applied mode using the RPM display of the scan tool.
(9) Torque converter clutch on pressure should be 60-90 psi.

TEST SIX-SELECTOR IN REVERSE

NOTE: This test checks the reverse clutch hydraulic circuit.

(1) Attach gauge to the reverse and low/reverse clutch tap.

AUTOMATIC TRANSMISSION - 42RLE (Continued)

(2) Move selector lever to the REVERSE position.

(3) Read reverse clutch pressure with output stationary (foot on brake) and throttle opened to achieve 1500 rpm.

(4) Reverse and low/reverse clutch pressure should read 165 to 235 psi.

TEST RESULT INDICATIONS

(1) If proper line pressure is found in any one test, the pump and pressure regulator are working properly.

(2) Low pressure in all positions indicates a defective pump, a clogged filter, or a stuck pressure regulator valve.

(3) Clutch circuit leaks are indicated if pressures do not fall within the specified pressure range.

(4) If the overdrive clutch pressure is greater than 5 psi in Step 6 of Test Three, a worn reaction shaft seal ring or a defective solenoid assembly is indicated.

(5) If the underdrive clutch pressure is greater than 5 psi in Step 4 of Test Two-A, a defective solenoid/pressure switch assembly or controller is the cause.

ALL PRESSURE SPECIFICATIONS ARE PSI (ON HOIST, WITH WHEELS FREE TO TURN)

Gear Selector Position	Actual Gear	PRESSURE TAPS						
		Under-drive Clutch	Over-drive Clutch	Reverse Clutch	Torque Con-verter Clutch Off	Torque Con-verter Clutch On	2/4 Clutch	Low/ Reverse Clutch
PARK - 0 mph *	PARK	0-2	0-5	0-2	60-110	45-100	0-2	115-145
REVERSE - 0 mph *	REVERSE	0-2	0-7	165-235	50-100	35-85	0-2	165-235
NEUTRAL - 0 mph *	NEUTRAL	0-2	0-5	0-2	60-110	45-100	0-2	115-145
Low - 20 mph #	FIRST	110-145	0-5	0-2	60-110	45-100	0-2	115-145
Third - 30 mph #	SECOND	110-145	0-5	0-2	60-110	45-100	115-145	0-2
Third - 45 mph #	DIRECT	75-95	75-95	0-2	60-90	45-80	0-2	0-2
OD - 30 mph #	OVERDRIVE	0-2	75-95	0-2	60-90	45-80	75-95	0-2
OD - 50 mph #	OVERDRIVE WITH TCC	0-2	75-95	0-2	0-5	60-95	75-95	0-2

*** Engine Speed at 1500 rpm**

 # CAUTION: Both wheels must be turning at same speed.

AUTOMATIC TRANSMISSION - 42RLE (Continued)

CLUTCH AIR PRESSURE TESTS

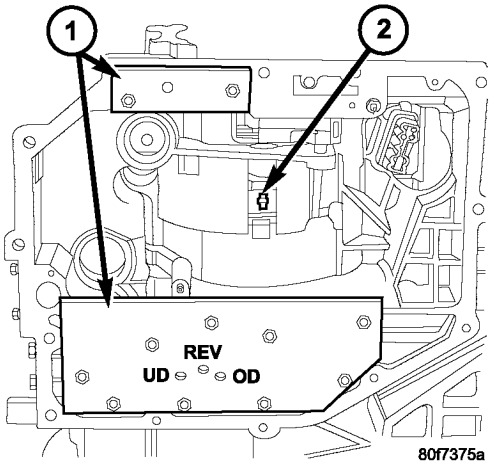

Fig. 9 Air Pressure Test Plate

1 - AIR PRESSURE TEST PLATES
2 - 2/4 CLUTCH RETAINER HOLE

Inoperative clutches can be located by substituting air pressure for fluid pressure. The clutches may be tested by applying air pressure to their respective passages after the valve body has been removed. Use Special Tool 6599-1 (1) and 6599-2 (1) to perform test (Fig. 9).

To make air pressure tests, proceed as follows:

NOTE: The compressed air supply must be free of all dirt and moisture. Use a pressure of 30 psi.

(1) Remove oil pan and valve body. (Refer to 21 - TRANSMISSION/AUTOMATIC - 42RLE/VALVE BODY - REMOVAL)

(2) Apply air pressure to the holes in the special tool (1), one at a time.

(3) Listen for the clutch to apply. It will give a slight thud sound. If a large amount of air is heard escaping, the transmission must be removed from vehicle, disassembled and all seals inspected.

2/4 CLUTCH

Apply air pressure to the feed hole located on the 2/4 clutch retainer (2). Look in the area where the 2/4 piston contacts the first separator plate and watch carefully for the 2/4 piston to move rearward. The piston should return to its original position after the air pressure is removed.

OVERDRIVE CLUTCH

Apply air pressure to the overdrive clutch apply passage and watch for the push/pull piston to move forward. The piston should return to its starting position when the air pressure is removed.

REVERSE CLUTCH

Apply air pressure to the reverse clutch apply passage and watch for the push/pull piston to move rearward. The piston should return to its starting position when the air pressure is removed.

LOW/REVERSE CLUTCH

Apply air pressure to the low/reverse clutch feed hole passage. Look in the area where the low/reverse piston contacts the first separator plate. Watch carefully for the piston to move forward. The piston should return to its original position after the air pressure is removed.

UNDERDRIVE CLUTCH

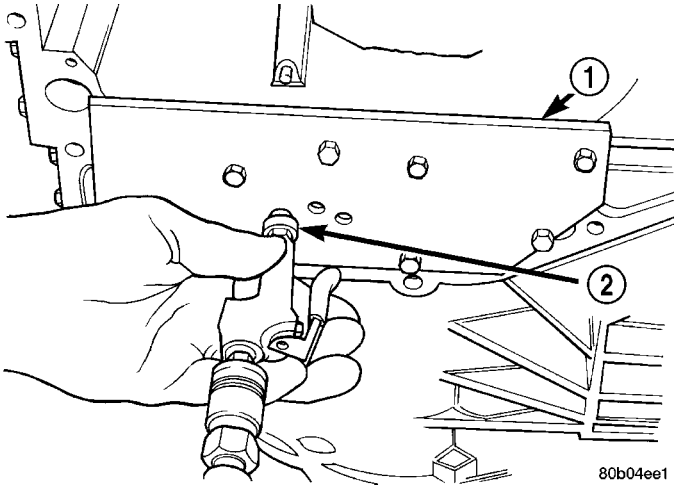

Fig. 10 Testing Underdrive Clutch

1 - AIR PRESSURE TEST PLATE 6599-1
2 - AIR NOZZLE

Because this clutch piston cannot be seen, its operation is checked by function. Use an air nozzle (2) to apply air pressure is to the low/reverse or the 2/4 clutch opening in Test Plate 6599-1 (2). This locks the output shaft. Use a piece of rubber hose wrapped around the input shaft and a pair of clamp-on pliers to turn the input shaft. Next apply air pressure (Fig. 10) to the underdrive clutch. The input shaft should not rotate with hand torque. Release the air pressure and confirm that the input shaft will rotate.

FLUID LEAKAGE

FLUID LEAKAGE - TORQUE CONVERTER HOUSING AREA

When diagnosing converter housing (5) fluid leaks, three actions must be taken before repair:

(1) Verify proper transmission fluid level.

(2) Verify that the leak originates from the converter housing area and is transmission fluid.

(3) Determine the true source of the leak.

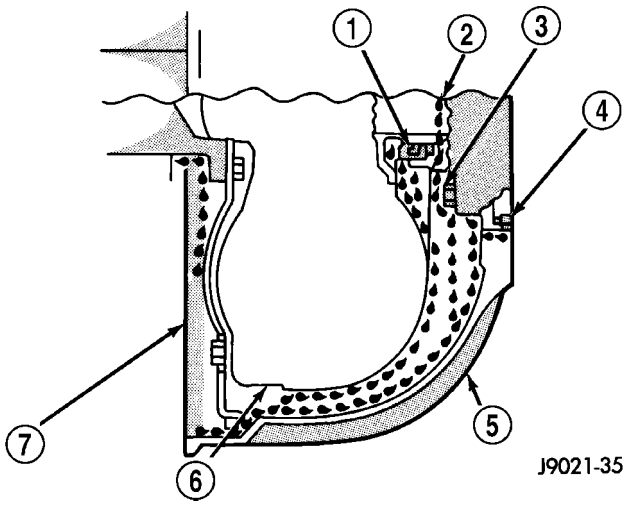

Fig. 11 Converter Housing Leak Paths

1 - PUMP SEAL
2 - PUMP VENT
3 - PUMP BOLT
4 - PUMP GASKET
5 - CONVERTER HOUSING
6 - CONVERTER
7 - REAR MAIN SEAL LEAK

Fluid leakage at or around the torque converter area (Fig. 11) may originate from an engine oil leak (7). The area should be examined closely. Factory fill fluid is red and, therefore, can be distinguished from engine oil.

Some suspected converter housing fluid leaks may not be leaks at all. They may only be the result of residual fluid in the converter housing, or excess fluid spilled during factory fill, or fill after repair. Converter housing leaks have several potential sources. Through careful observation, a leak source can be identified before removing the transmission for repair.

Pump seal (1) leaks tend to move along the drive hub (Fig. 11) and onto the rear of the converter. Pump o-ring or pump body leaks follow the same path as a seal leak. Pump attaching bolt (3) leaks are generally deposited on the inside of the converter housing (5) and not on the converter itself. Pump seal (1) or gasket (4) leaks usually travel down the inside of the converter housing.

TORQUE CONVERTER LEAKAGE

Possible sources of torque converter leakage are:

- Torque converter weld leaks at the outside diameter weld (1). (Fig. 12)
- Torque converter hub weld (2).

STANDARD PROCEDURE - ALUMINUM THREAD REPAIR

Damaged or worn threads in the aluminum transmission case and valve body can be repaired by the use of Heli-Coils®, or equivalent. This repair consists of drilling out the worn-out damaged threads. Then tap the hole with a special Heli-Coil® tap, or equivalent, and installing a Heli-Coil® insert, or equivalent, into the hole. This brings the hole back to its original thread size.

Heli-Coil®, or equivalent, tools, and inserts are readily available from most automotive parts suppliers.

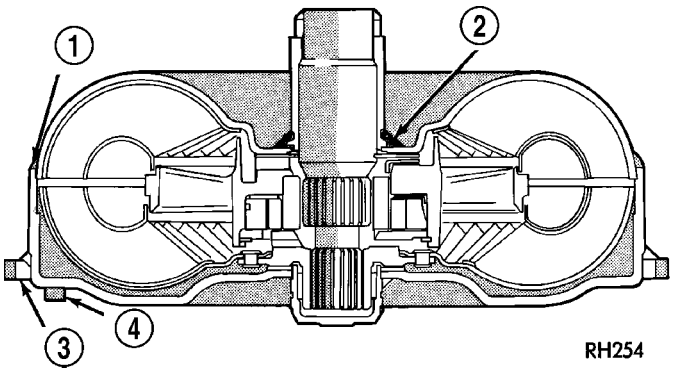

Fig. 12 Converter Leak Points - Typical

1 - OUTSIDE DIAMETER WELD
2 - TORQUE CONVERTER HUB WELD
3 - STARTER RING GEAR
4 - LUG

REMOVAL

(1) Disconnect the negative battery cable.
(2) Raise and support the vehicle
(3) Remove any necessary skid plates (Fig. 13). (Refer to 13 - FRAMES & BUMPERS/FRAME/TRANSFER CASE SKID PLATE - REMOVAL)

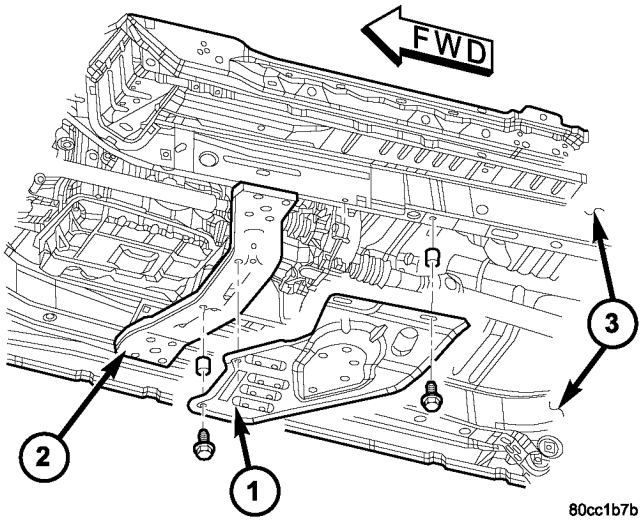

Fig. 13 Remove Skid Plate

1 - SKID PLATE
2 - TRANSMISSION CROSSMEMBER
3 - FRAME RAILS

AUTOMATIC TRANSMISSION - 42RLE (Continued)

(4) Mark propeller shaft and axle companion flanges for assembly alignment.

(5) Remove the rear propeller shaft. (Refer to 3 - DIFFERENTIAL & DRIVELINE/PROPELLER SHAFT/PROPELLER SHAFT - REMOVAL)

(6) Remove the front propeller shaft, if necessary. (Refer to 3 - DIFFERENTIAL & DRIVELINE/PROPELLER SHAFT/PROPELLER SHAFT - REMOVAL)

(7) Disconnect wires from the input and output speed sensors (Fig. 14).

(8) Disconnect wires from the transmission range sensor (Fig. 14) and the solenoid/pressure switch assembly (Fig. 15).

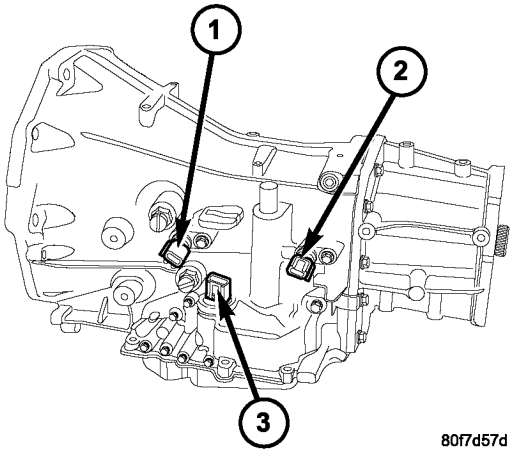

Fig. 14 Input and Output Speed Sensors and Transmission Range Sensor

1 - INPUT SPEED SENSOR
2 - OUTPUT SPEED SENSOR
3 - TRANSMISSION RANGE SENSOR

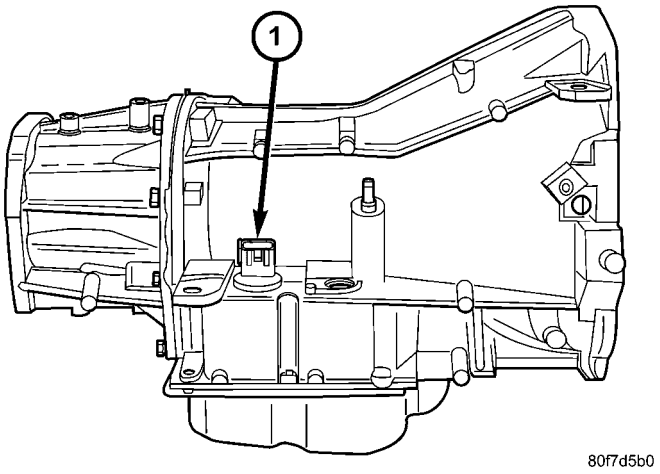

Fig. 15 Solenoid/Pressure Switch Assembly

1 - SOLENOID/PRESSURE SWITCH ASSEMBLY CONNECTOR

(9) Remove the bolts holding the exhaust crossover pipe to the pre-catalytic converter pipe flanges (Fig. 16).

(10) Remove the bolts holding the exhaust crossover pipe to the catalytic converter flange.

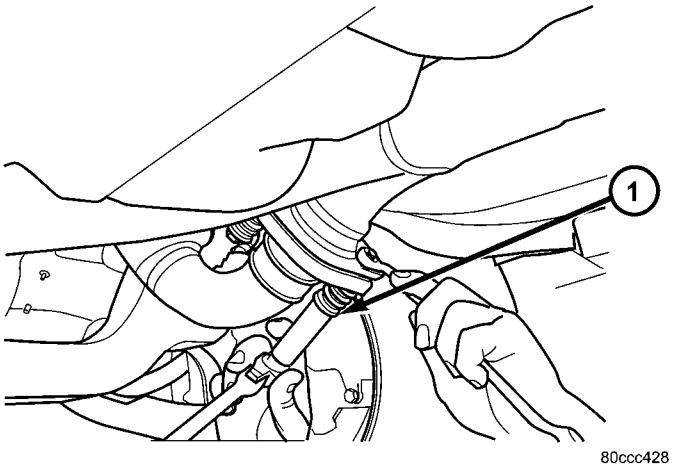

Fig. 16 Remove Exhaust Flange Bolts

1 - EXHAUST FLANGE BOLTS

(11) Disconnect gearshift cable from transmission manual valve lever.

(12) Disengage the shift cable from the cable support bracket.

(13) Remove the starter motor.

(14) Remove the engine to transmission collar.

(15) Rotate crankshaft in clockwise direction until converter bolts are accessible. Then remove bolts one at a time. Rotate crankshaft with socket wrench on dampener bolt.

(16) Disconnect the transmission vent hose from the transmission.

(17) Remove transfer case.

(18) Support rear of engine with safety stand or jack.

(19) Raise transmission slightly with service jack to relieve load on crossmember and supports.

(20) Remove bolts securing rear support and cushion to transmission and crossmember (Fig. 17).

(21) Remove bolts attaching crossmember to frame and remove crossmember.

(22) Disconnect transmission fluid cooler lines at transmission fittings and clips.

(23) Remove all remaining converter housing bolts.

(24) Carefully work transmission and torque converter assembly rearward off engine block dowels.

(25) Hold torque converter in place during transmission removal.

(26) Lower transmission and remove assembly from under the vehicle.

(27) To remove torque converter, carefully slide torque converter out of the transmission.

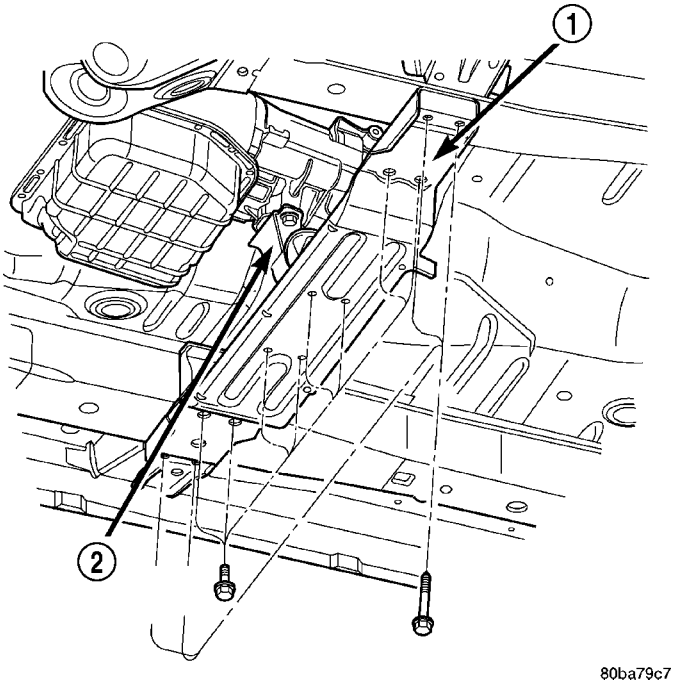

Fig. 17 Rear Transmission Crossmember

1 - CROSSMEMBER
2 - REAR TRANSMISSION MOUNT

DISASSEMBLY

NOTE: If the transmission is being reconditioned (clutch/seal replacement) or replaced, it is necessary to perform the Quick Learn Procedure using the scan tool (Refer to 8 - ELECTRICAL/ELECTRONIC CONTROL MODULES/TRANSMISSION CONTROL MODULE - STANDARD PROCEDURE).

NOTE: Tag all clutch pack assemblies, as they are removed, for reassembly identification.

CAUTION: Do not intermix clutch discs or plates as the unit might then fail.

Before disassembling transmission, move the shift lever clockwise as far as it will go and then remove the shift lever.

(1) Remove the torque converter (1) (Fig. 18) from the transmission input shaft (3).

(2) Measure input shaft end play using Tool 8266 (1, 2). Set up Tool 8266 (Fig. 19) and a dial indicator as shown.

(3) Move input shaft in and out to obtain end play reading. End play specifications are 0.13 to 0.64 mm (0.005 to 0.025 inch). Record indicator reading for reference when reassembling the transmission. If endplay exceeds the specified range, the #4 thrust plate needs to be inspected and changed if necessary.

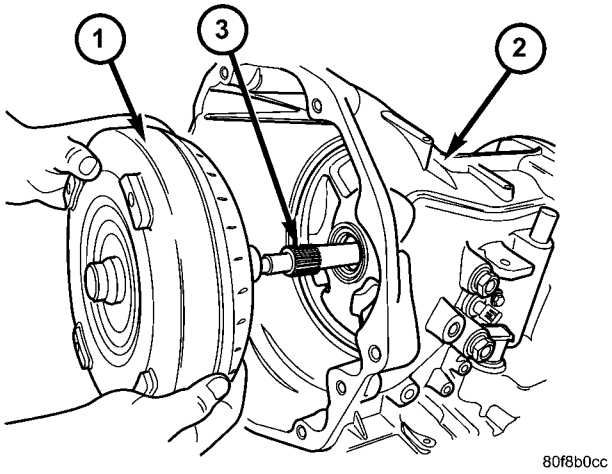

Fig. 18 Remove Torque Converter

1 - TORQUE CONVERTER
2 - TRANSMISSION
3 - INPUT SHAFT

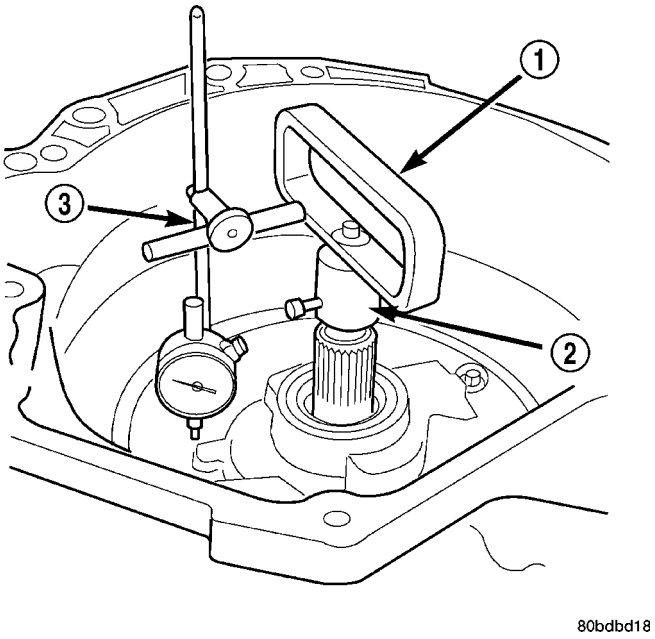

Fig. 19 Measure Input Shaft End Play Using Tool 8266 - Typical

1 - TOOL 8266-8
2 - TOOL 8266-2
3 - TOOL C-3339

NOTE: The four bolts (3) along the bottom of the adapter or extension housing (2) have a sealing patch applied from the factory. Note the locations of these bolts and separate these bolts for reuse.

AUTOMATIC TRANSMISSION - 42RLE (Continued)

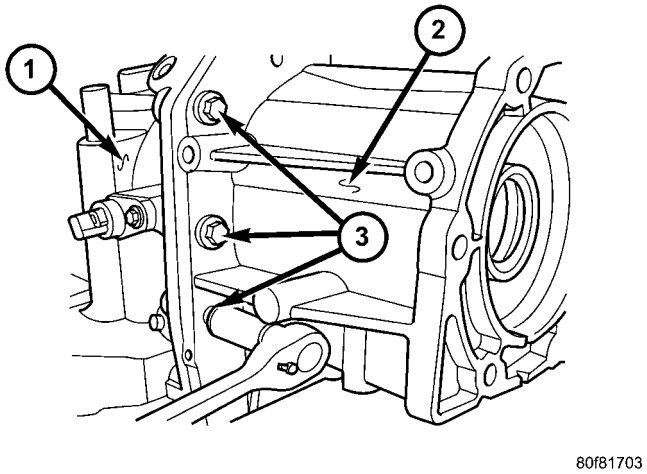

Fig. 20 Remove Adapter Housing Bolts

1 - TRANSMISSION CASE
2 - ADAPTER HOUSING
3 - BOLTS

(4) Remove the bolts (Fig. 20) that hold the adapter or extension housing (2) onto the transmission case.

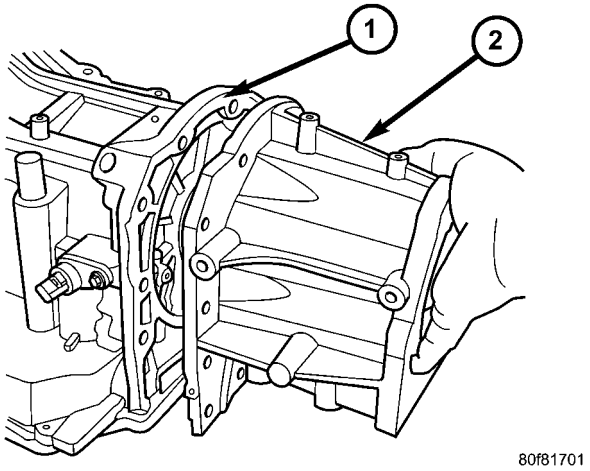

Fig. 21 Remove Adapter Housing

1 - TRANSMISSION CASE
2 - ADAPTER HOUSING

(5) Remove the adapter (2) (Fig. 21) housing, 4X4 vehicles only, from the transmission case. There are two pry slots located near the bottom corners of the housing for separating the housing from the transmission case.

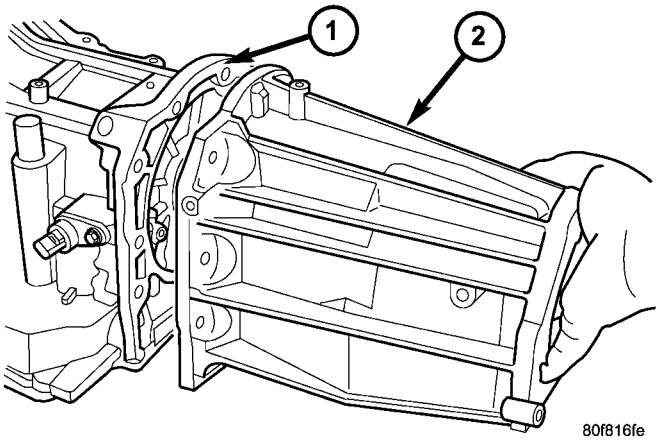

Fig. 22 Remove Extension Housing

1 - TRANSMISSION CASE
2 - EXTENSION HOUSING

(6) Remove the extension (2) (Fig. 22) housing, 4X2 vehicles only, from the transmission case. There are two pry slots located near the bottom corners of the housing for separating the housing from the transmission case.

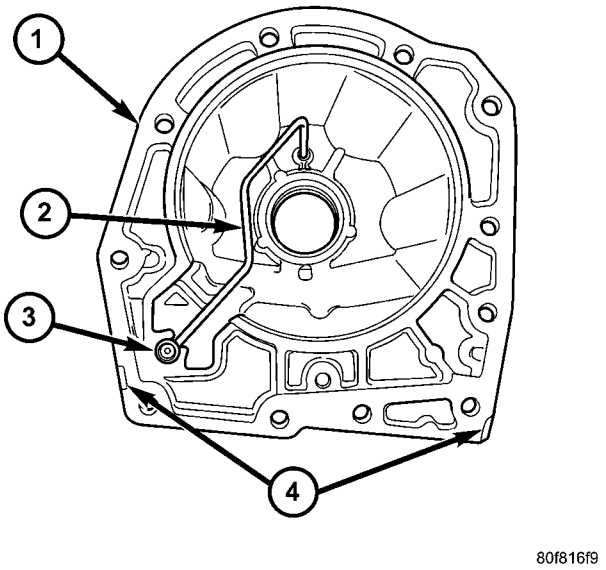

Fig. 23 Lube Tube Grommet

1 - HOUSING
2 - LUBE TUBE
3 - GROMMET
4 - PRY SLOTS

(7) Inspect the lube tube grommet (3) (Fig. 23) for damage. If the grommet lip is damaged, it will need to be replaced.

AUTOMATIC TRANSMISSION - 42RLE (Continued)

(8) On 4X2 transmissions, perform the following, if necessary:

(a) Remove the extension shaft bearing snap ring (3) (Fig. 24) from the extension housing.

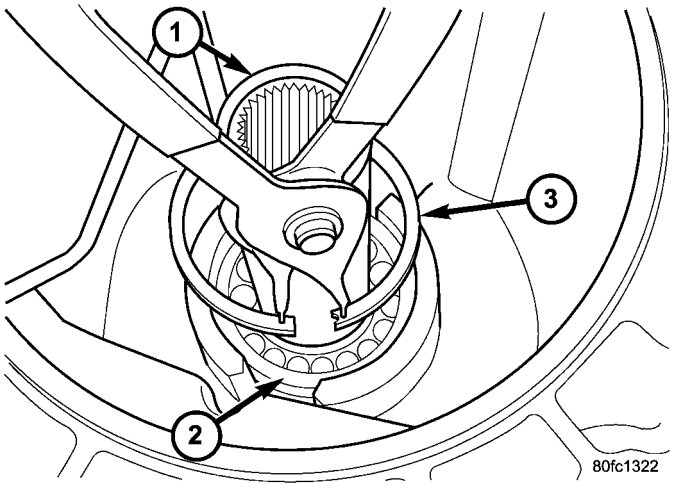

Fig. 24 Remove Extension Shaft Bearing Snap Ring

1 - EXTENSION SHAFT
2 - BEARING
3 - SNAP RING

(b) Remove the extension shaft and bearing assembly (2) (Fig. 25) from the extension housing (1).

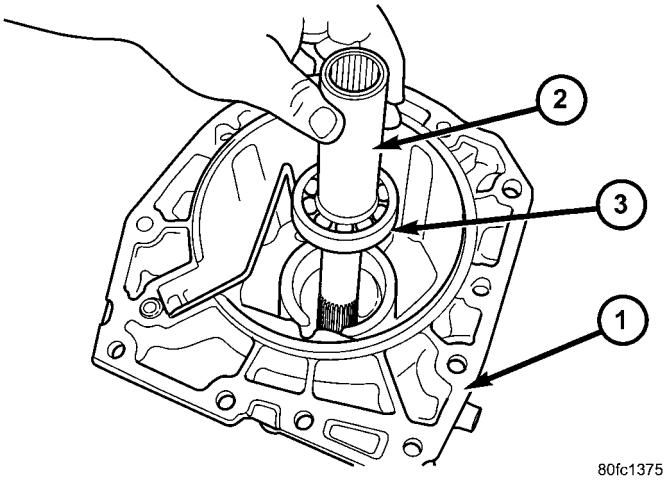

Fig. 25 Remove Extension Shaft and Bearing Assembly

1 - EXTENSION HOUSING
2 - EXTENSION SHAFT
3 - BEARING

(c) Remove the extension shaft bearing retaining ring (3) (Fig. 26) from the extension shaft (1).

(d) Remove the extension shaft bearing (2) (Fig. 27) from the extension shaft (1).

(9) Using a Slide Hammer C-3752 (2) (Fig. 28), remove the 4X4 stub shaft (1).

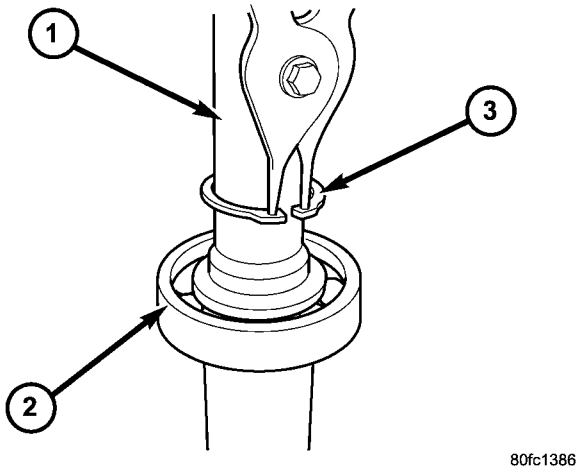

Fig. 26 Remove Extension Shaft Bearing Retaining Ring

1 - EXTENSION SHAFT
2 - BEARING
3 - RETAINING RING

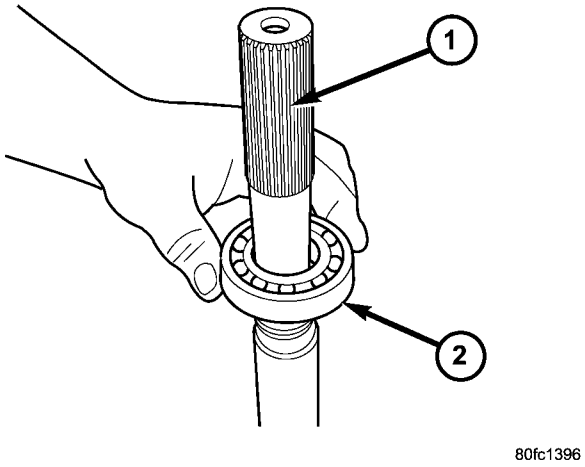

Fig. 27 Remove Extension Shaft Bearing

1 - EXTENSION SHAFT
2 - BEARING

(10) Remove the 4X4 stub shaft (1) (Fig. 29) from the transmission output shaft. Inspect the cir-clip on the shaft for damage and replace the clip if necessary.

NOTE: The speed sensor bolts have a sealing patch applied from the factory. Separate these bolts for reuse.

AUTOMATIC TRANSMISSION - 42RLE (Continued)

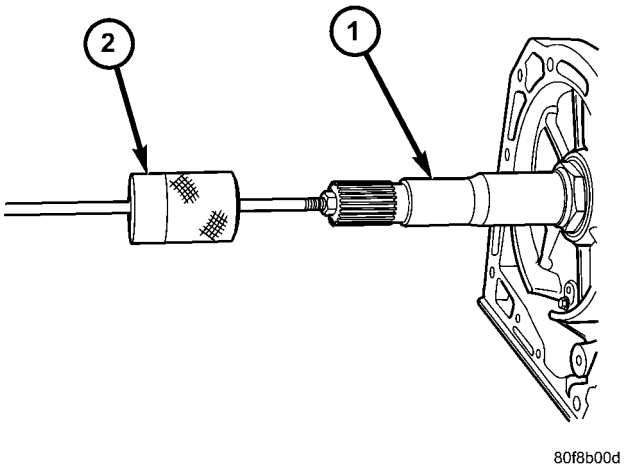

Fig. 28 Remove the 4X4 Stub shaft Using C-3752

1 - 4X4 STUB SHAFT
2 - PULLER C-3752

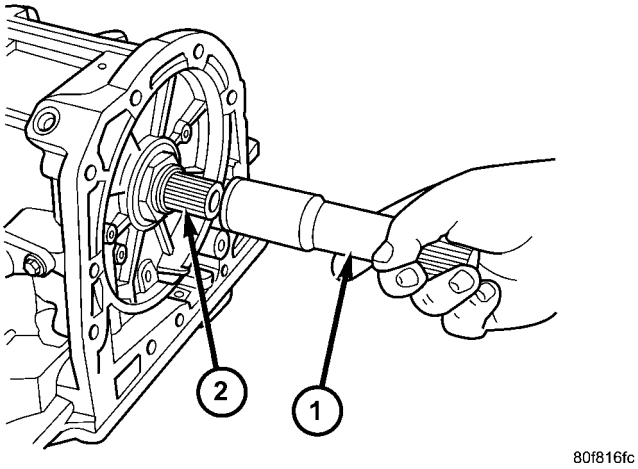

Fig. 29 Remove 4X4 Stub Shaft

1 - STUB SHAFT
2 - OUTPUT SHAFT

(11) Remove the input speed sensor bolt. (Fig. 30)

NOTE: The speed sensor bolts have a sealing patch applied from the factory. Separate these bolts for reuse.

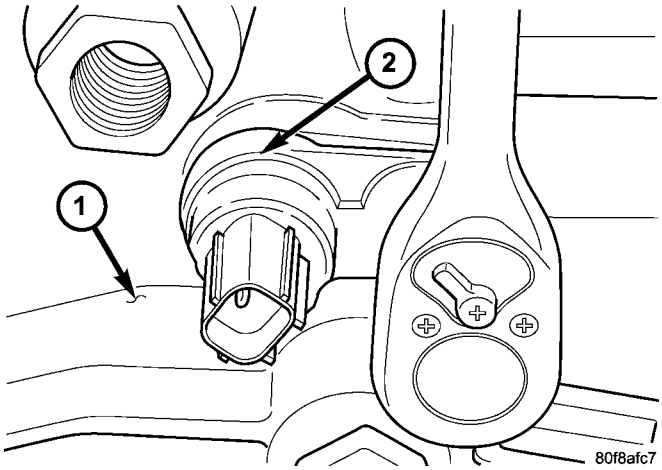

Fig. 30 Remove Input Speed Sensor Bolt

1 - INPUT SPEED SENSOR
2 - TRANSMISSION CASE

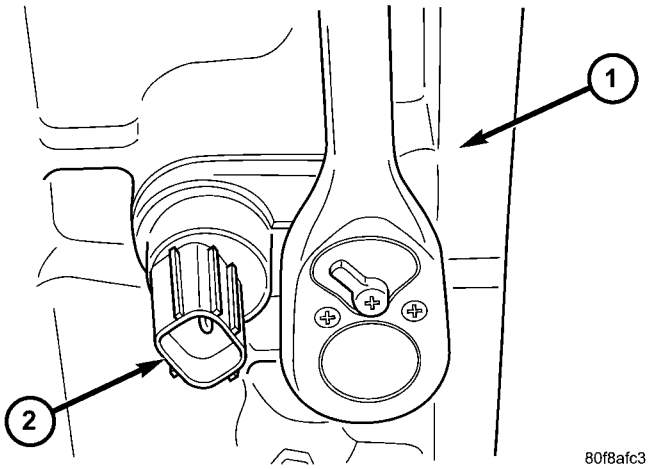

Fig. 31 Remove Output Speed Sensor Bolt

1 - OUTPUT SPEED SENSOR
2 - TRANSMISSION CASE

(12) Remove the output speed sensor bolt. (Fig. 31)

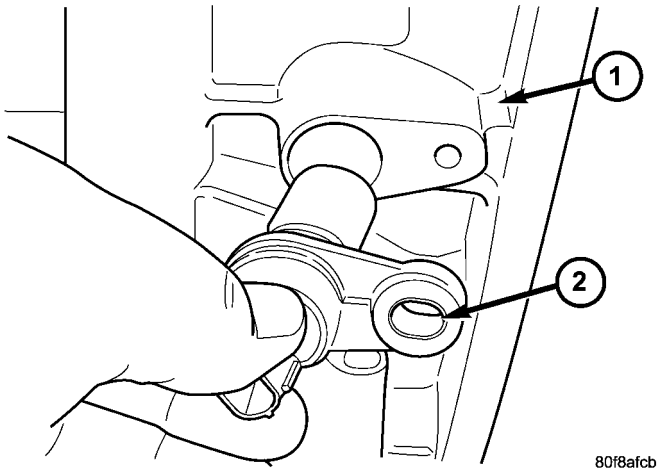

Fig. 32 Remove Output Speed Sensor

1 - OUTPUT SPEED SENSOR
2 - TRANSMISSION CASE

(13) Remove the input and output (2) (Fig. 32) speed sensors. Identify the speed sensors for re-installation since they are not interchangeable.

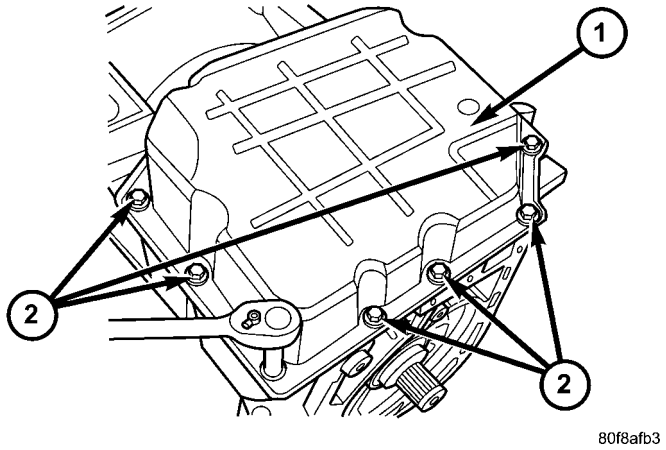

Fig. 33 Remove Transmission Oil Pan Bolts

1 - TRANSMISSION OIL PAN
2 - BOLTS

NOTE: One of the oil pan bolts has a sealing patch applied from the factory. Separate this bolt for reuse.

(14) Remove the transmission oil pan bolts (2) (Fig. 33).

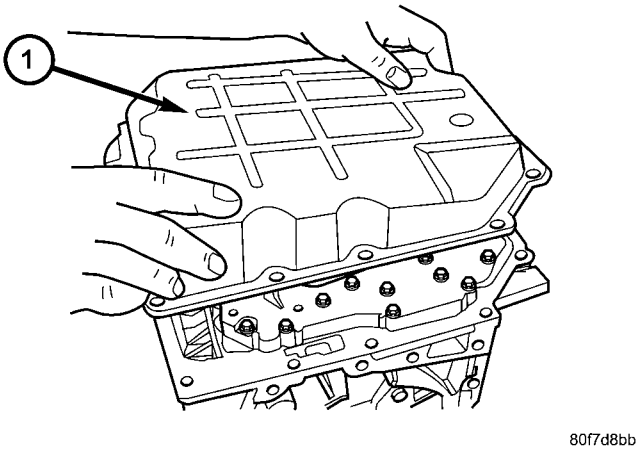

Fig. 34 Remove Transmission Oil Pan

1 - TRANSMISSION OIL PAN

(15) Remove the transmission oil pan (1) (Fig. 34).

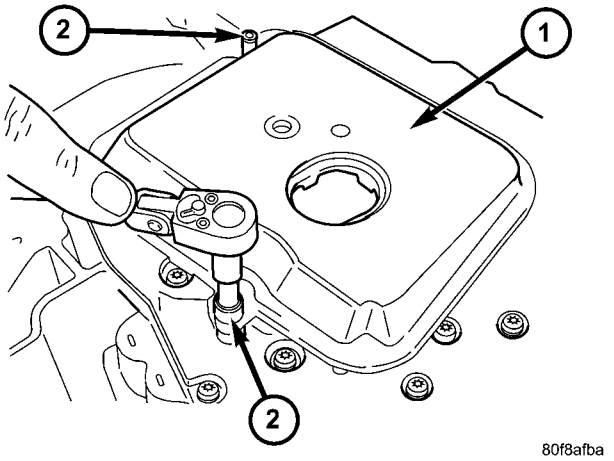

Fig. 35 Remove Oil Filter Screws

1 - OIL FILTER
2 - SCREWS

(16) Remove the transmission oil filter screws (2) (Fig. 35).

AUTOMATIC TRANSMISSION - 42RLE (Continued)

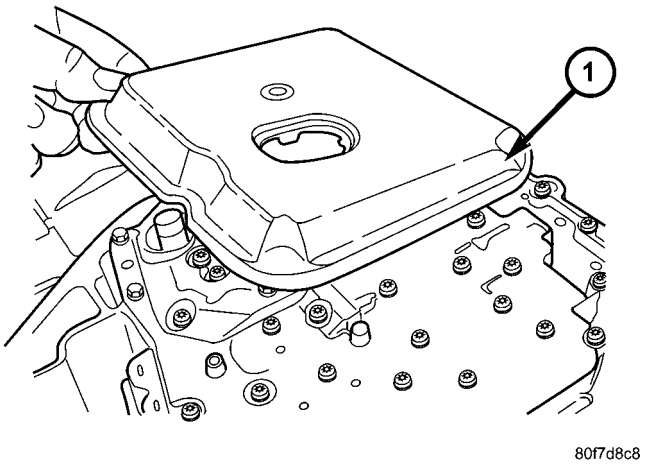

Fig. 36 Remove Transmission Filter

1 - TRANSMISSION FILTER

(17) Remove transmission oil filter (1) (Fig. 36).

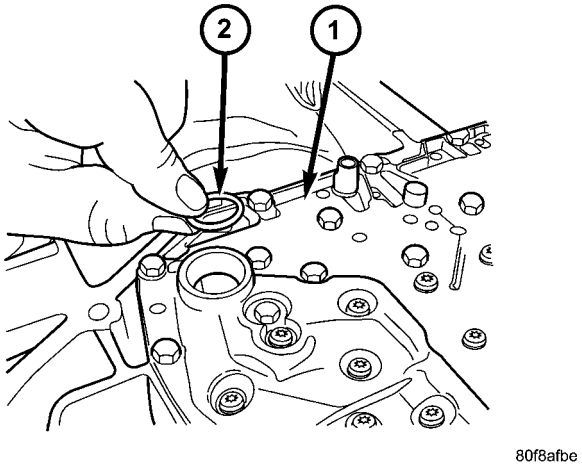

Fig. 37 Remove Oil Filter O-Ring

1 - VALVE BODY
2 - O-RING

(18) Remove the oil filter o-ring (2) (Fig. 37) from the valve body.

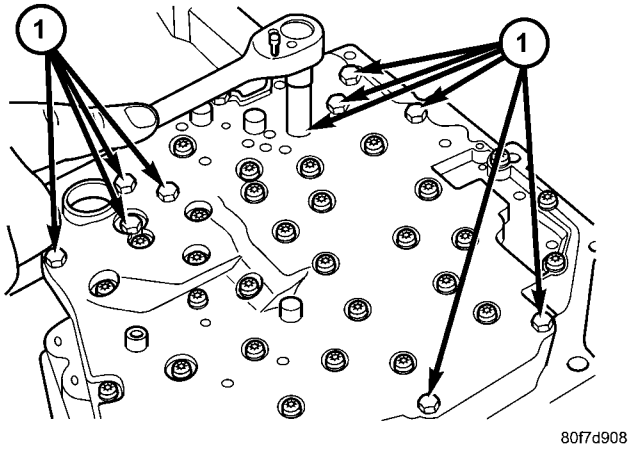

Fig. 38 Remove Valve Body Bolts

1 - BOLTS

(19) Remove valve body-to-case bolts (1) (Fig. 38).

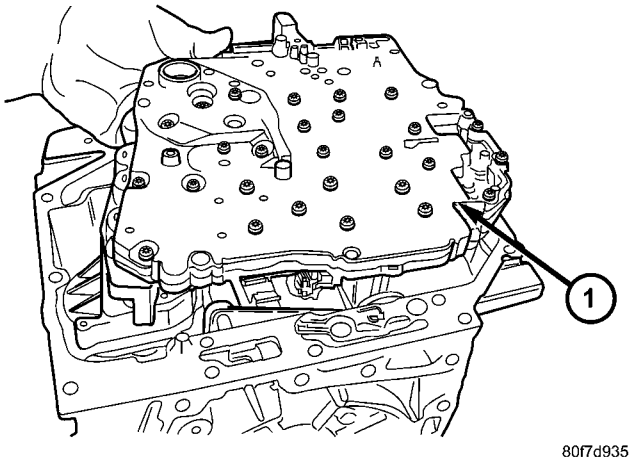

Fig. 39 Remove Valve Body From Transmission

1 - VALVE BODY

CAUTION: Do not handle the valve body by the manual shaft. Damage could result.

(20) Remove valve body (1) (Fig. 39) from transmission.

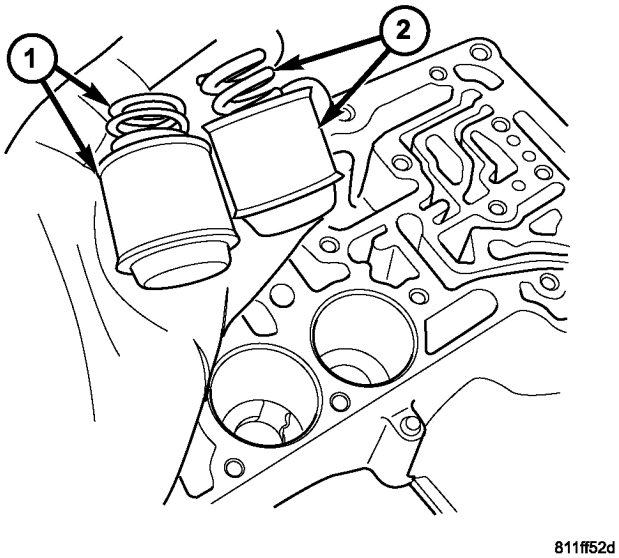

Fig. 40 Underdrive and Overdrive Accumulators

1 - OVERDRIVE PISTON AND SPRING
2 - UNDERDRIVE PISTON AND SPRING

(21) Remove underdrive and overdrive accumulators (1, 2) (Fig. 40).

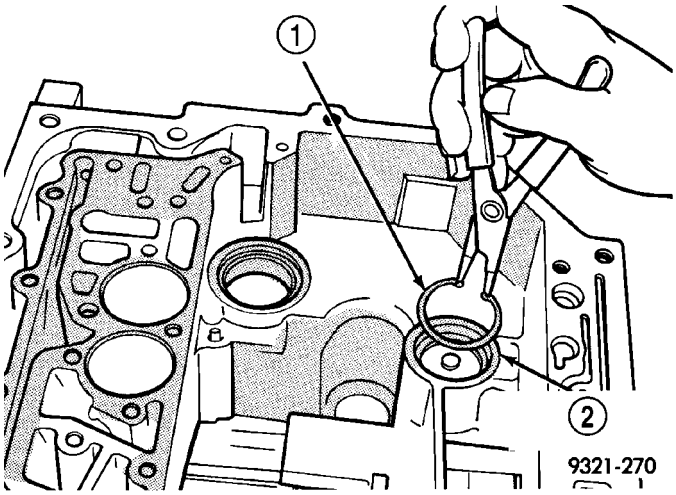

Fig. 41 Remove Low/Reverse Accumulator

1 - SNAP RING
2 - LOW/REVERSE ACCUMULATOR

(22) Remove the low/reverse accumulator snap ring (1) (Fig. 41).

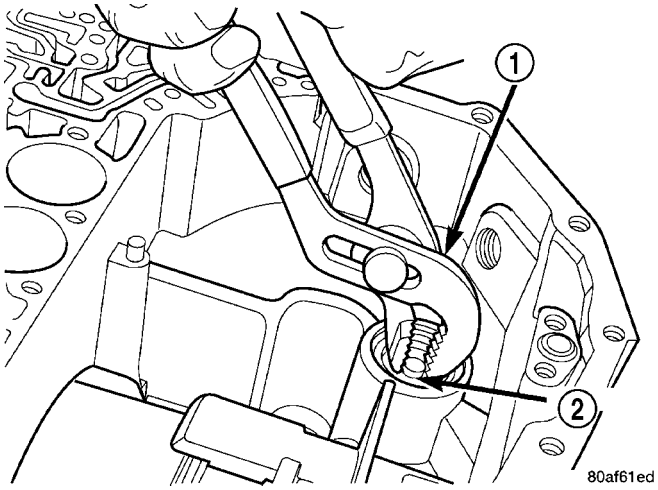

Fig. 42 Remove Low/Reverse Accumulator Plug

1 - ADJUSTABLE PLIERS
2 - PLUG

(23) Remove the low/reverse accumulator plug (2) (Fig. 42).

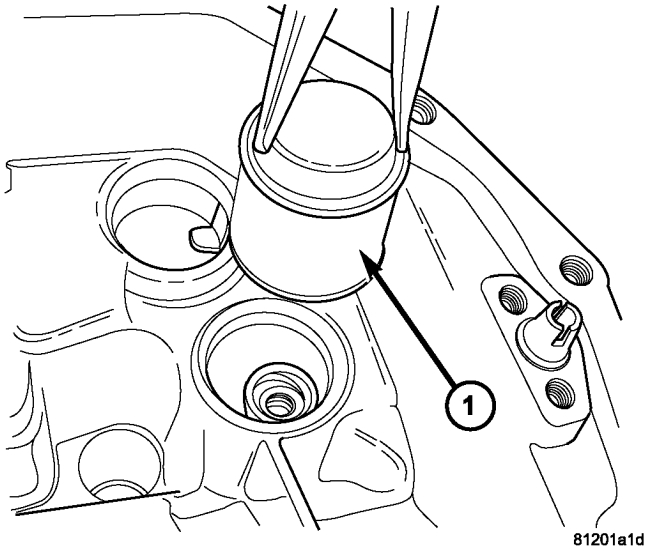

Fig. 43 Low/Reverse Accumulator Piston

1 - ACCUMULATOR PISTON

(24) Remove low/reverse accumulator piston (1) (Fig. 43) using suitable pliers.

AUTOMATIC TRANSMISSION - 42RLE (Continued)

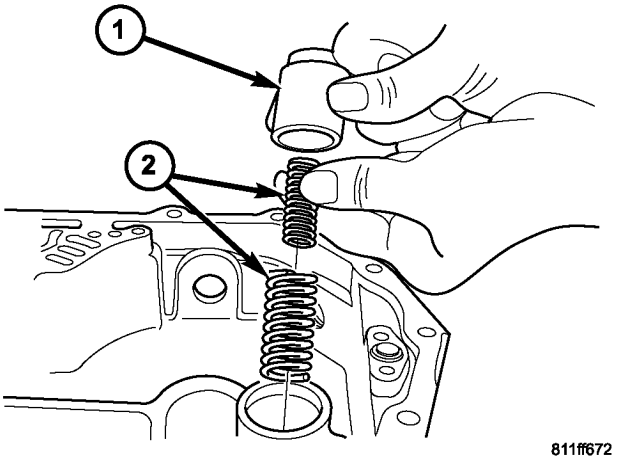

Fig. 44 Low/Reverse Accumulator

1 - PISTON
2 - RETURN SPRINGS

(25) Remove piston (1) and springs (2) (Fig. 44).

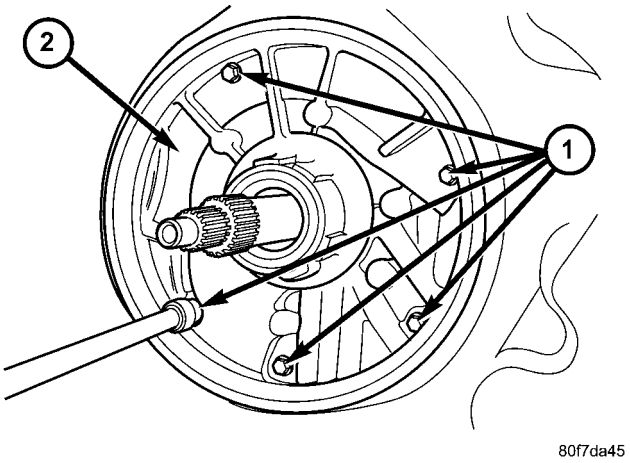

Fig. 45 Remove Oil Pump Attaching Bolts

1 - BOLTS
2 - OIL PUMP

(26) Remove and discard the oil pump-to-case bolts (1) (Fig. 45). The oil pump bolts are not to be reused.

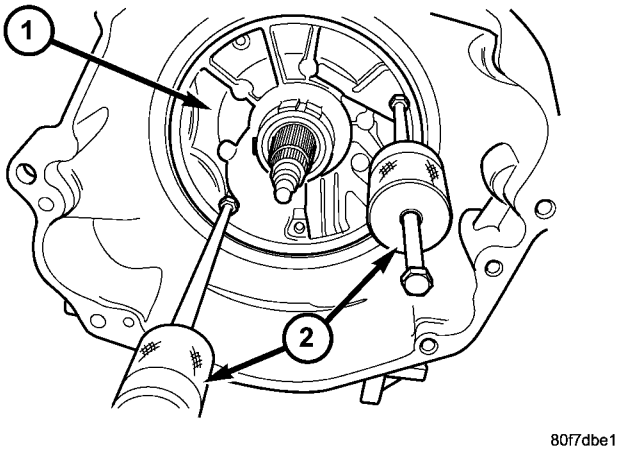

Fig. 46 Oil Pump Pullers

1 - OIL PUMP
2 - PULLERS

(27) Remove oil pump using C-3752 Pullers (2) (Fig. 46).

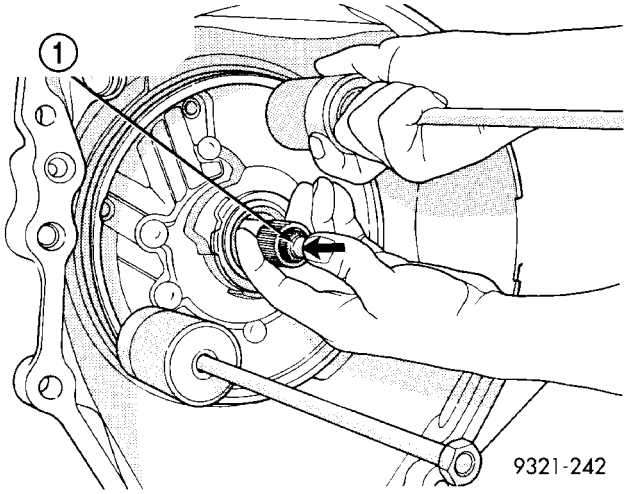

Fig. 47 Remove Oil Pump

1 - “PUSH IN” ON INPUT SHAFT WHILE REMOVING PUMP

(28) Remove oil pump while pushing in on input shaft (1) (Fig. 47).

AUTOMATIC TRANSMISSION - 42RLE (Continued)

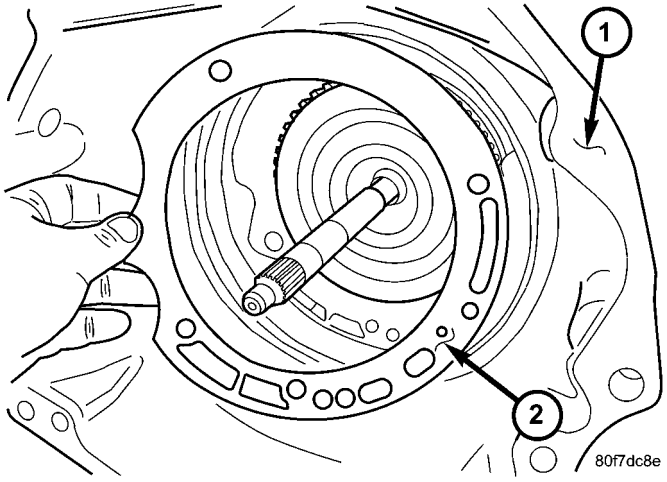

Fig. 48 Remove Oil Pump Gasket

1 - BELLHOUSING
2 - OIL PUMP GASKET

(29) Remove oil pump gasket (2) (Fig. 48).

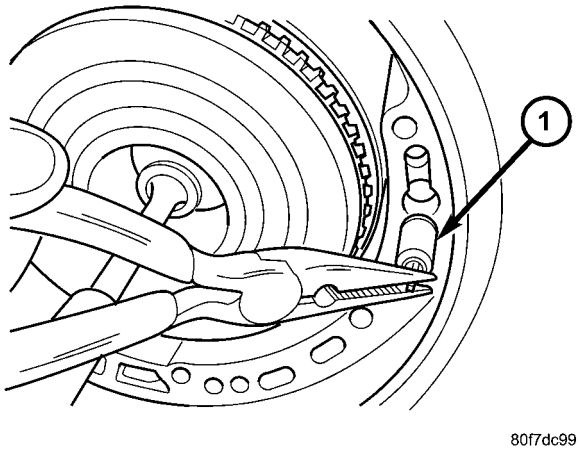

Fig. 49 Remove By-Pass Valve

1 - BYPASS VALVE

CAUTION: By-pass valve must be replaced if transmission failure occurs.

(30) Remove the cooler by-pass valve (1) (Fig. 49).

(31) Remove the #1 caged needle bearing (1) (Fig. 50).

(32) Remove the input clutch assembly (1) (Fig. 51).

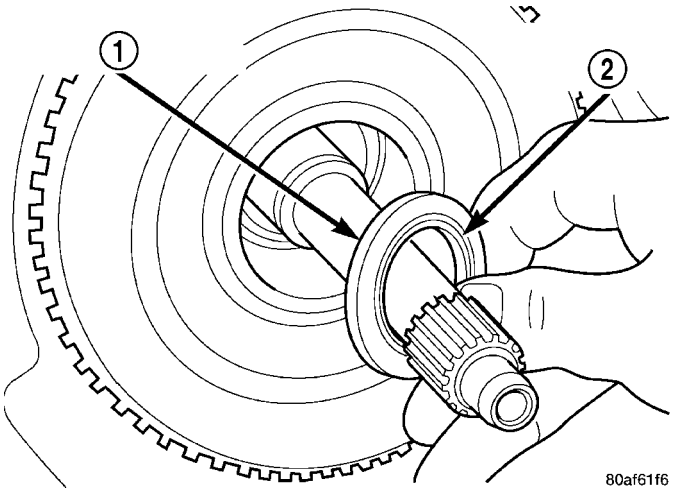

Fig. 50 Remove No. 1 Caged Needle Bearing

1 - #1 CAGED NEEDLE BEARING
2 - NOTE: TANGED SIDE OUT

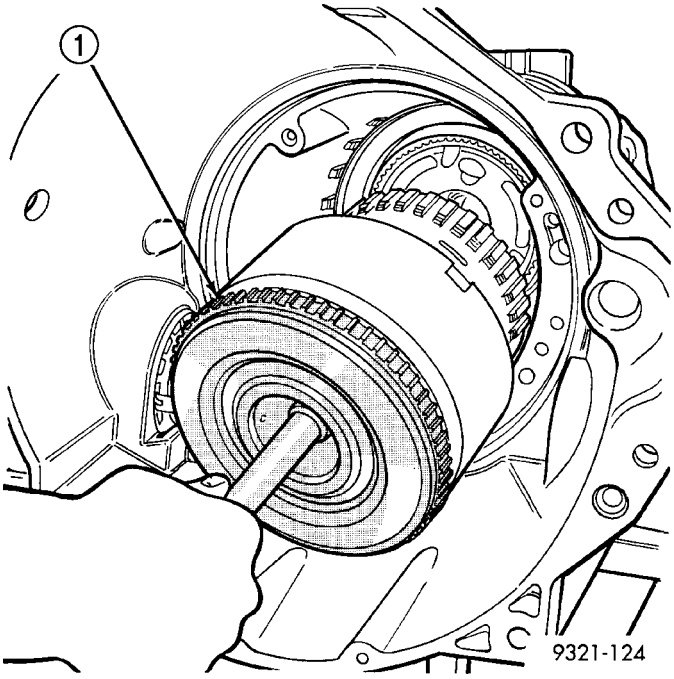

Fig. 51 Remove Input Clutch Assembly

1 - INPUT CLUTCH ASSEMBLY

AUTOMATIC TRANSMISSION - 42RLE (Continued)

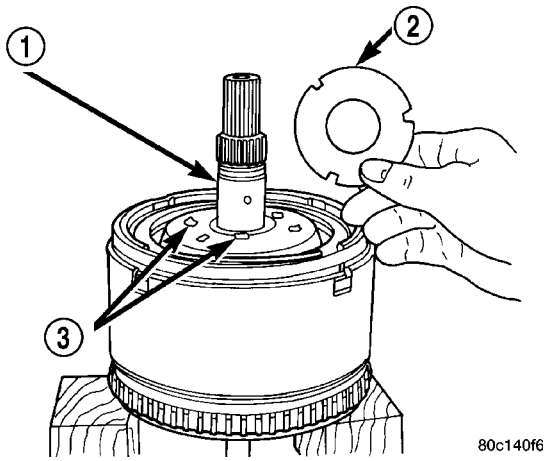

Fig. 52 Remove #4 Thrust Plate

1 - OVERDRIVE SHAFT ASSEMBLY
2 - #4 THRUST PLATE (SELECT)
3 - PETROLATUM FOR RETENTION

(33) Remove the #4 thrust plate (2) (Fig. 52).

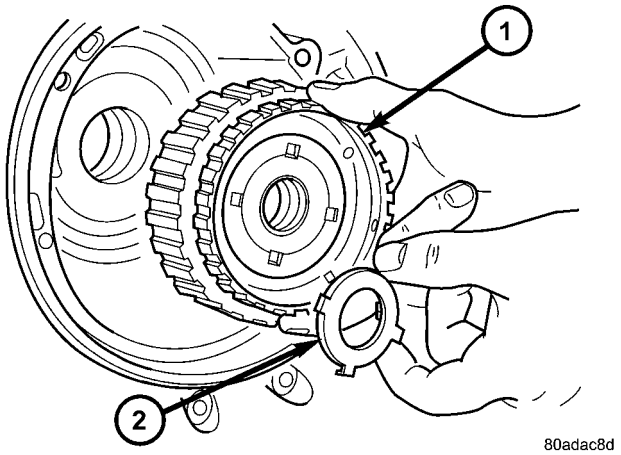

Fig. 53 Remove Front Sun Gear Assembly

1 - FRONT SUN GEAR ASSEMBLY
2 - #4 THRUST WASHER (FOUR TABS)

(34) Remove the front sun gear assembly (1) (Fig. 53) and #4 thrust washer (if still in place).

(35) Remove the front carrier/rear annulus (2) and #6 needle bearing (1) (Fig. 54).

(36) Remove the rear sun gear (2) and #7 needle bearing (1) (Fig. 55).

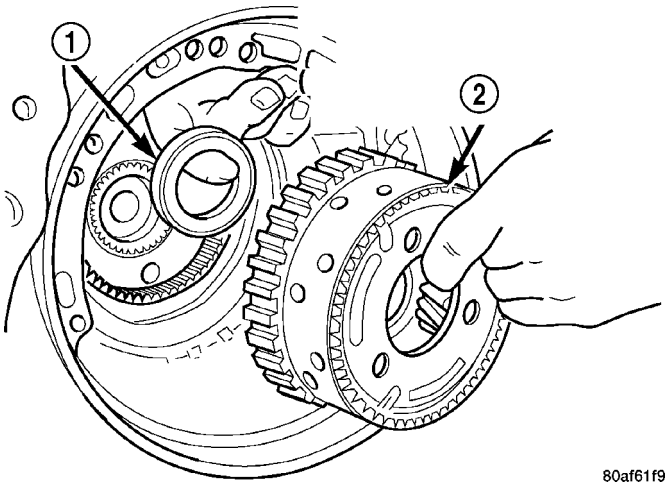

Fig. 54 Remove Front Carrier/Rear Annulus

1 - #6 NEEDLE BEARING
2 - FRONT CARRIER AND REAR ANNULUS ASSEMBLY (TWIST AND PULL OR PUSH TO REMOVE OR INSTALL).

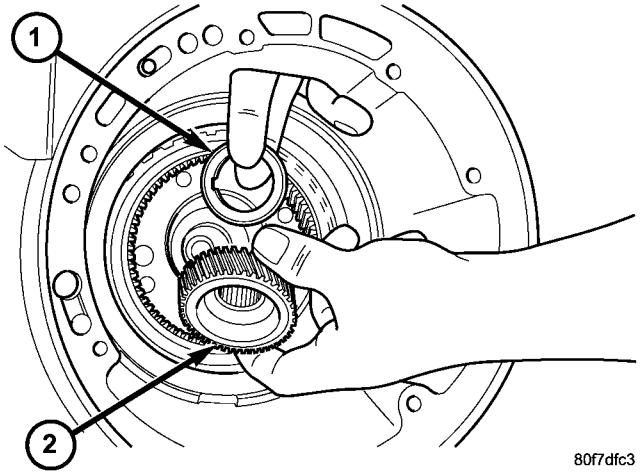

Fig. 55 Remove Rear Sun Gear

1 - #7 NEEDLE BEARING
2 - REAR SUN GEAR

AUTOMATIC TRANSMISSION - 42RLE (Continued)

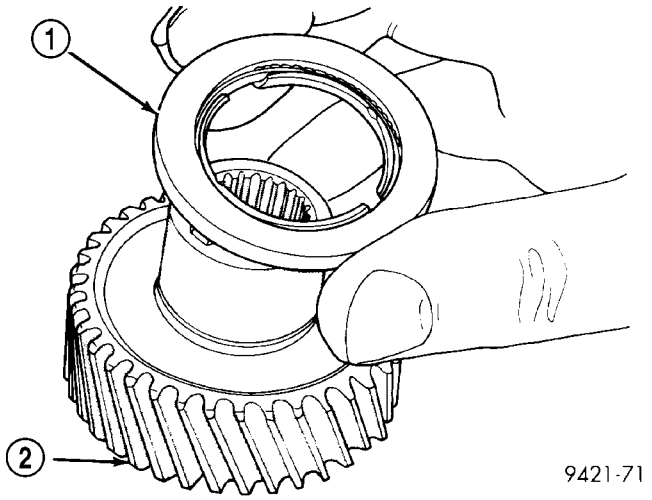

Fig. 56 Number 7 Bearing

1 - #7 BEARING
2 - REAR SUN GEAR

NOTE: The number seven needle bearing (1) (Fig. 56) has three antireversal tabs and is common with the number five and number two position. The orientation should allow the bearing to seat flat against the rear sun gear. A small amount of petrolatum can be used to hold the bearing to the rear sun gear.

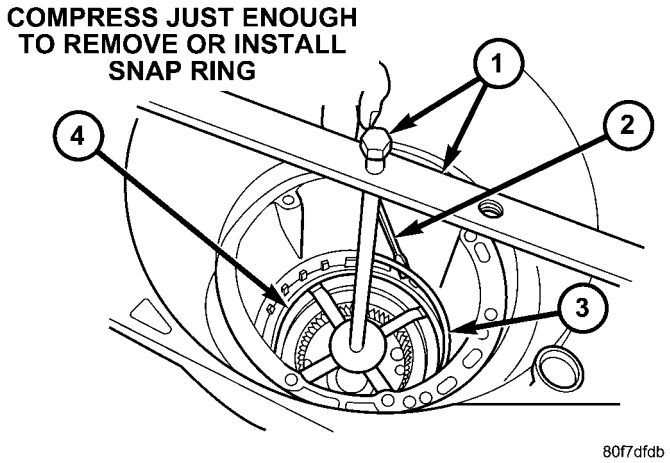

Fig. 57 Remove 2/4 Clutch Retainer Snap Ring

1 - TOOL 5058
2 - SCREWDRIVER
3 - SNAP RING
4 - 2/4 CLUTCH RETAINER

NOTE: Verify that Tool 5058A (1) is centered properly over the 2/4 clutch retainer (4) before compressing. If necessary, fasten the 5058A bar to the bellhousing flange with any combination of locking pliers and bolts to center the tool properly.

(37) Install and load Tool 5058A to remove the 2/4 clutch retainer snap ring (3) (Fig. 57).

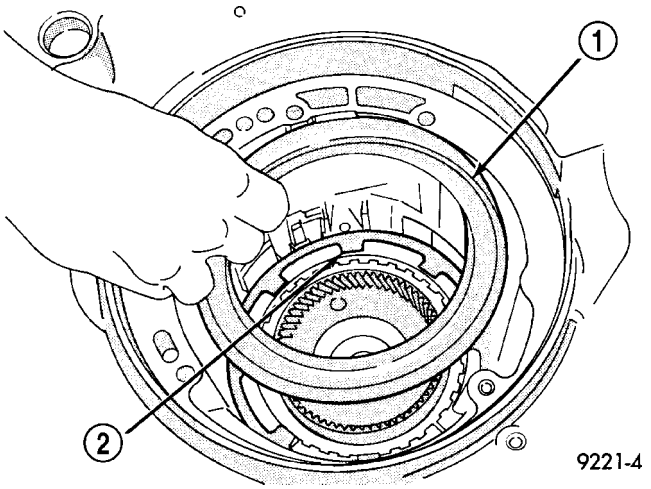

Fig. 58 2/4 Clutch Retainer

1 - 2/4 CLUTCH RETAINER
2 - 2/4 CLUTCH RETURN SPRING

NOTE: The 2/4 Clutch Piston has bonded seals which are not individually serviceable. Seal replacement requires replacement of the piston assembly.

(38) Remove the 2/4 clutch retainer (1) (Fig. 58).

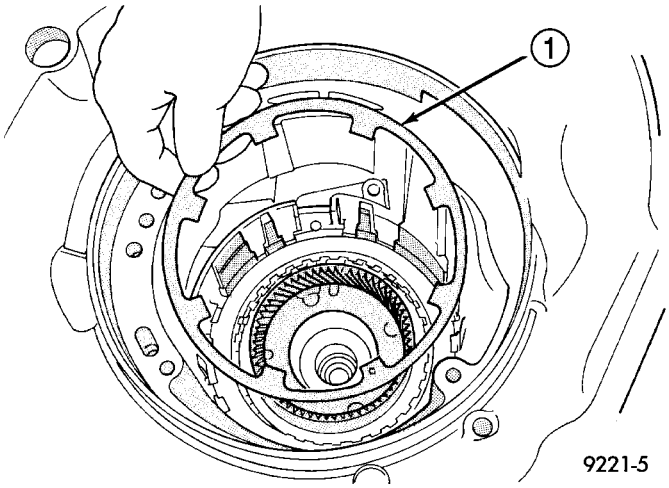

Fig. 59 Remove 2/4 Clutch Return Spring

1 - 2/4 CLUTCH RETURN SPRING

(39) Remove the 2/4 clutch return spring (1) (Fig. 59).

AUTOMATIC TRANSMISSION - 42RLE (Continued)

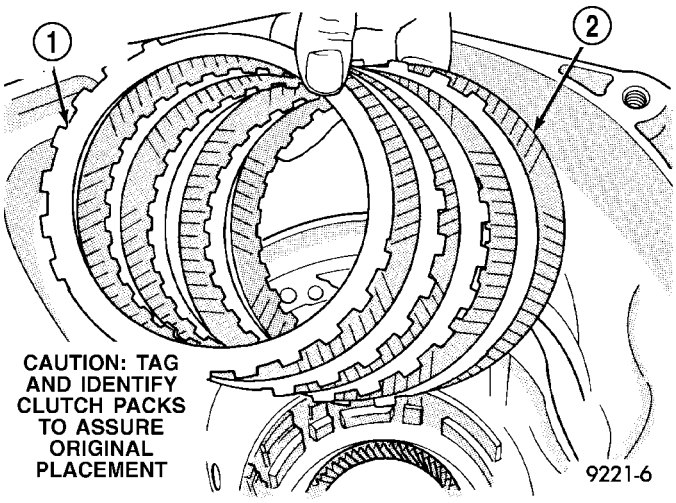

Fig. 60 Remove 2/4 Clutch Pack

1 - CLUTCH PLATE (4)
2 - CLUTCH DISC (4)

(40) Remove the 2/4 clutch pack (1, 2) (Fig. 60).

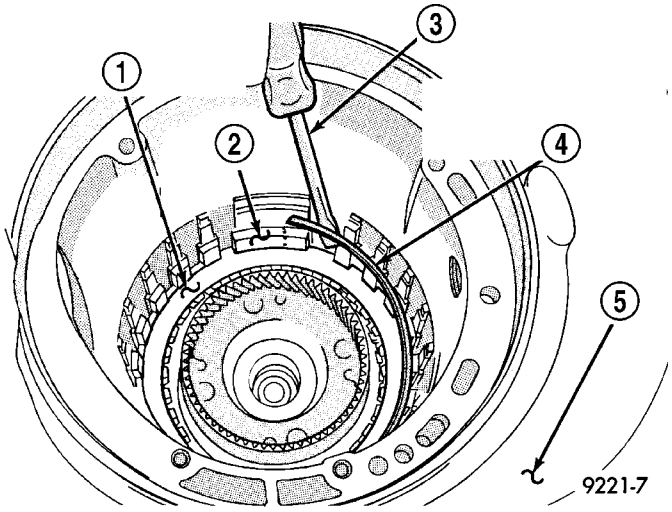

Fig. 61 Remove Tapered Snap Ring

1 - LOW/REVERSE CLUTCH REACTION PLATE
2 - LONG TAB
3 - SCREWDRIVER
4 - LOW/REVERSE TAPERED SNAP RING (TAPERED SIDE UP)
5 - OIL PAN FACE

(41) Remove the tapered snap ring (4) (Fig. 61).

(42) Remove the low/reverse reaction plate (1) (Fig. 62).

(43) Remove one (1) low/reverse clutch disc to facilitate snap ring removal. (Fig. 63)

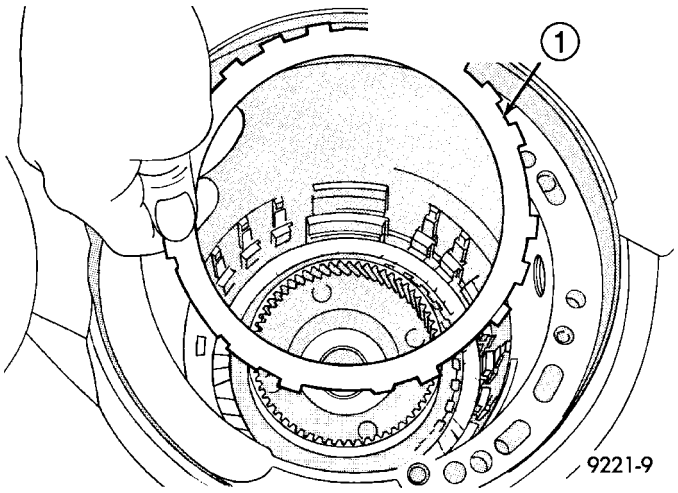

Fig. 62 Remove Low/Reverse Reaction Plate

1 - LOW/REVERSE REACTION PLATE (FLAT SIDE UP)

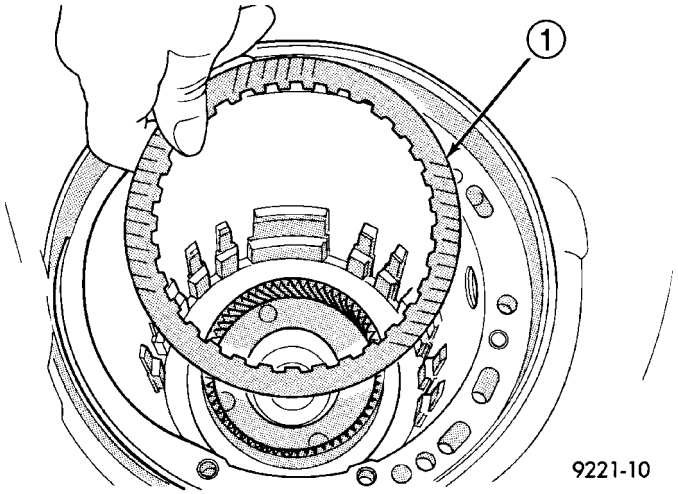

Fig. 63 Remove One Disc

1 - ONE DISC FROM LOW/REVERSE CLUTCH

AUTOMATIC TRANSMISSION - 42RLE (Continued)

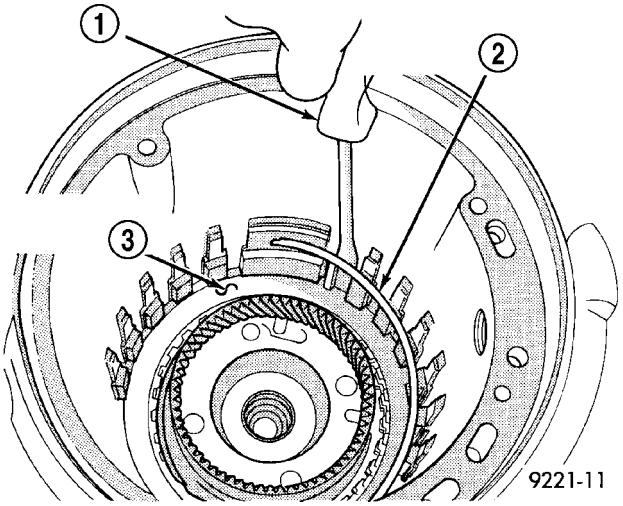

Fig. 64 Remove Low/Reverse Reaction Plate Snap Ring

1 - SCREWDRIVER
2 - LOW/REVERSE REACTION PLATE FLAT SNAP RING
3 - DO NOT SCRATCH CLUTCH PLATE

(44) Remove the low/reverse reaction plate snap ring (2) (Fig. 64).

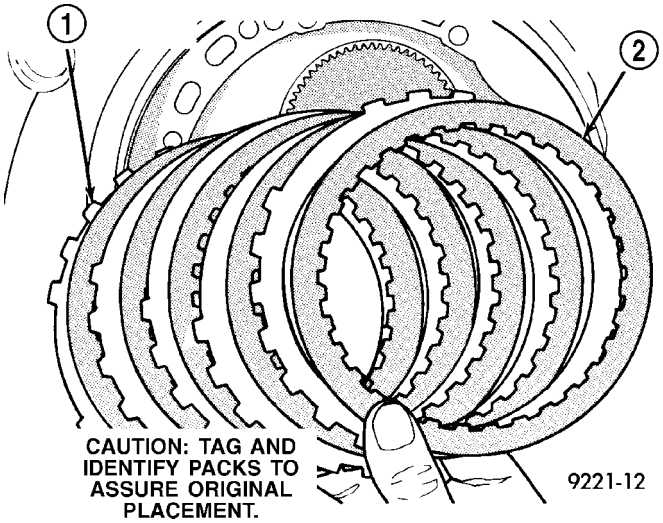

Fig. 65 Remove Low/Reverse Clutch Pack

1 - CLUTCH PLATES (5)
2 - CLUTCH DISCS (5)

(45) Remove the low/reverse clutch pack (1, 2) (Fig. 65).

CAUTION: Failure to grind and open stakes (4) (Fig. 66) of the output shaft nut will result in thread damage to the shaft during nut removal.

WARNING: WEAR SAFETY GOGGLES WHILE GRINDING STAKE NUTS.

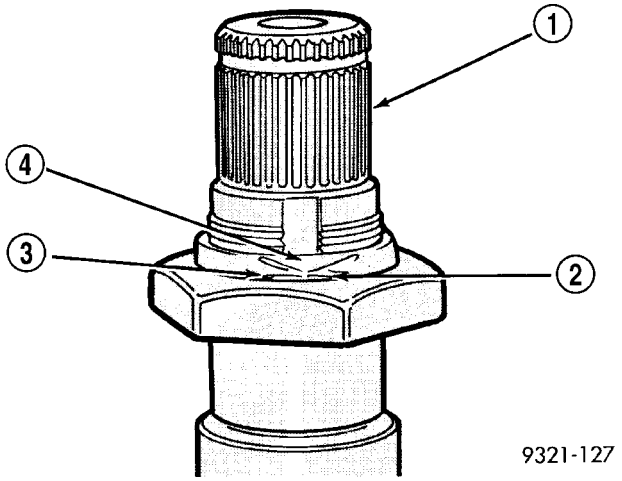

Fig. 66 Grinding Stakes

1 - OUTPUT SHAFT
2 - GRIND HERE
3 - GRIND HERE
4 - NUT STAKE

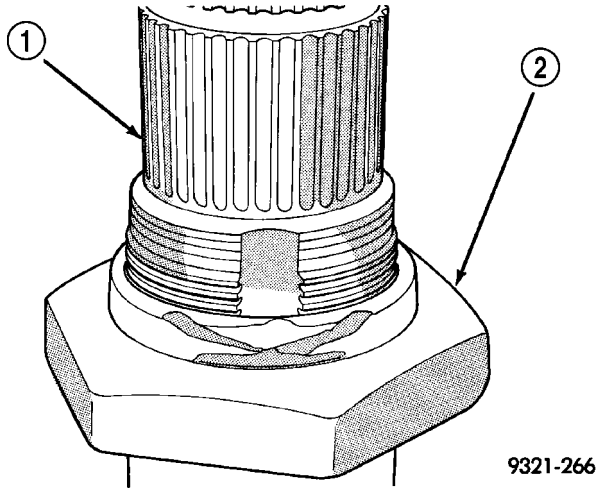

Fig. 67 Stake Grinding Pattern

1 - OUTPUT SHAFT
2 - OUTPUT SHAFT NUT

(46) Using a die grinder or equivalent, grind the stakes in the shoulder of the shaft nut (2) (Fig. 67) as shown. Do not grind all the way through the nut and into the shaft. There are two stakes on each nut.

AUTOMATIC TRANSMISSION - 42RLE (Continued)

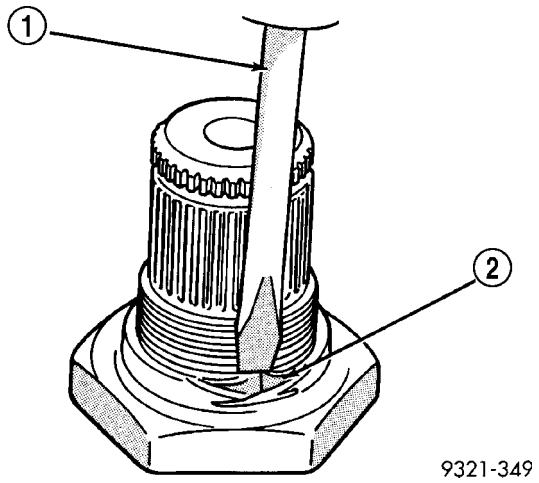

Fig. 68 Opening Nut Stakes

1 - CHISEL
2 - NUT STAKE

(47) Using a small chisel (1), carefully open the stakes on nut (2) (Fig. 68).

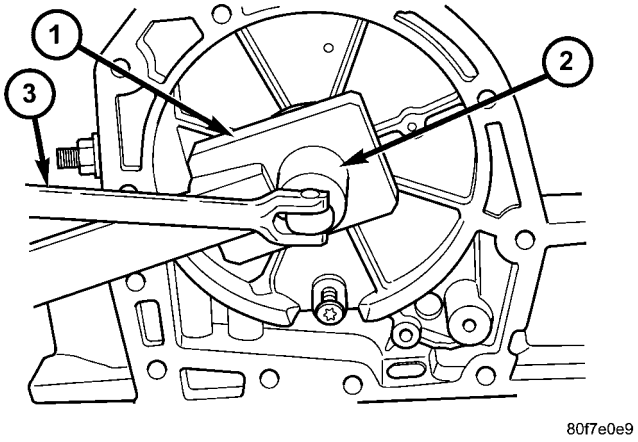

Fig. 69 Remove Output Shaft Nut

1 - SPECIAL TOOL 6497
2 - SPECIAL TOOL 6498A
3 - BREAKER BAR

(48) Use special tool 6497 (1) (Fig. 69) and 6498A (2) to remove the output shaft nut.

(49) Remove the output shaft (1) (Fig. 70) from case (3) using a shop press (2).

(50) Use special tool 6596 (2) (Fig. 71) with a shop press (1) to remove the front output shaft bearing cup.

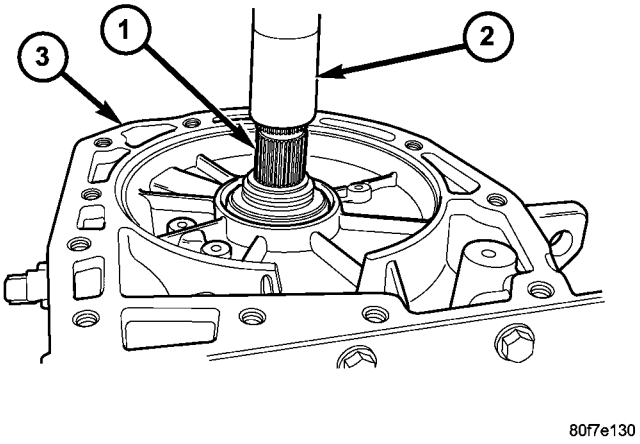

Fig. 70 Use Arbor Press to Remove Output Shaft from Case

1 - OUTPUT SHAFT
2 - ARBOR PRESS
3 - TRANSMISSION CASE

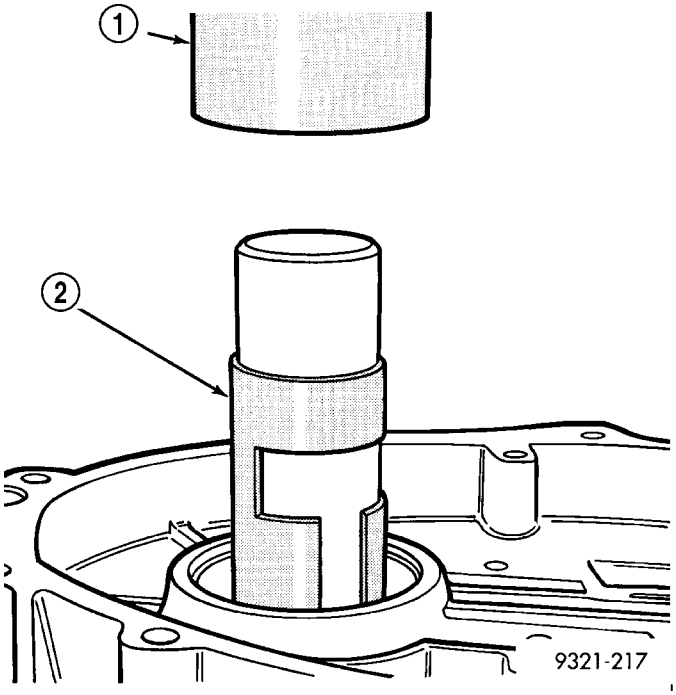

Fig. 71 Remove Front Bearing Cup - Typical

1 - ARBOR PRESS
2 - SPECIAL TOOL 6596

AUTOMATIC TRANSMISSION - 42RLE (Continued)

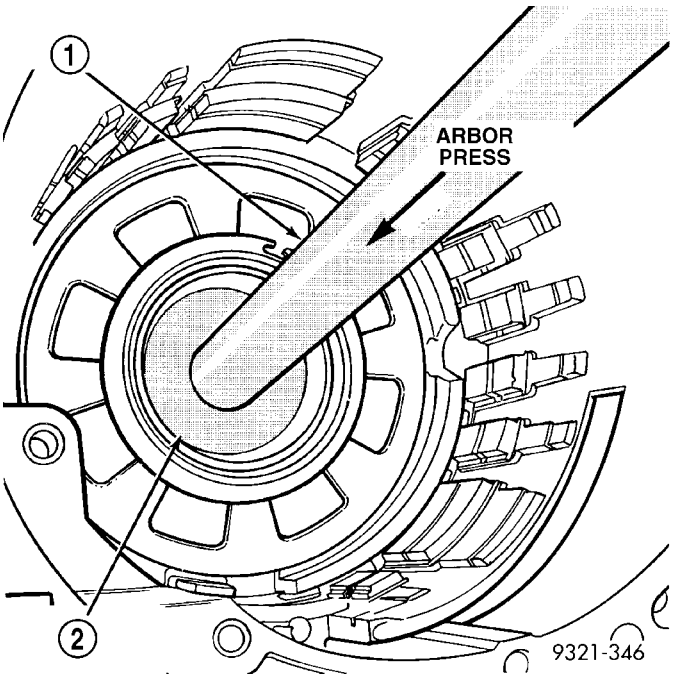

Fig. 72 Remove Rear Bearing Cup

1 - SPECIAL TOOL 4171 AND 4171-2
2 - SPECIAL TOOL 6597

(51) Use special tool 6597 (2) (Fig. 72) and handle C-4171 (1) and C-4171-2 to press the rear output shaft bearing cup rearward.

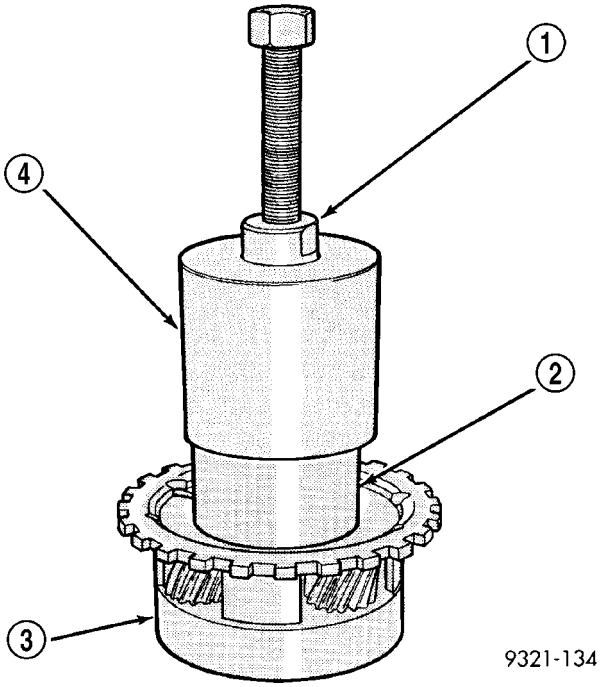

Fig. 73 Remove Rear Carrier Front Bearing Cone

1 - SPECIAL TOOL 5048-1
2 - SPECIAL TOOL 6545
3 - REAR CARRIER
4 - SPECIAL TOOL 5048

(52) Remove the rear carrier front bearing cone (3) (Fig. 73).

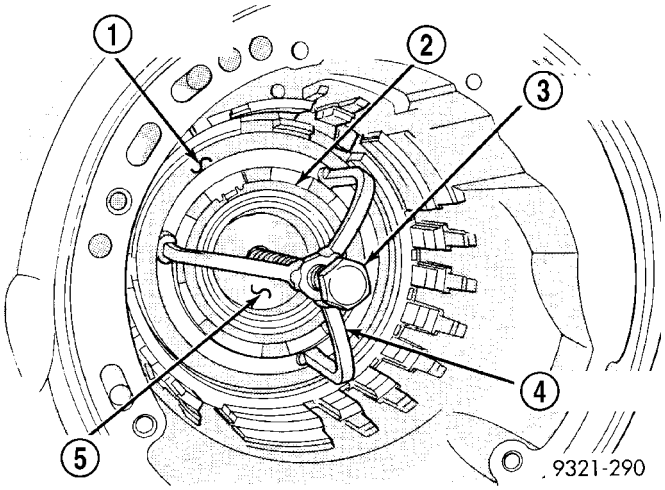

Fig. 74 Compressor Tool in Use

1 - LOW/REVERSE CLUTCH RETURN SPRING
2 - SNAP RING (INSTALL AS SHOWN)
3 - TOOL 5058A-3
4 - TOOL 5059A
5 - SPECIAL TOOL 6057

(53) Install and load compressor 5059A (4) (Fig. 74) as shown.

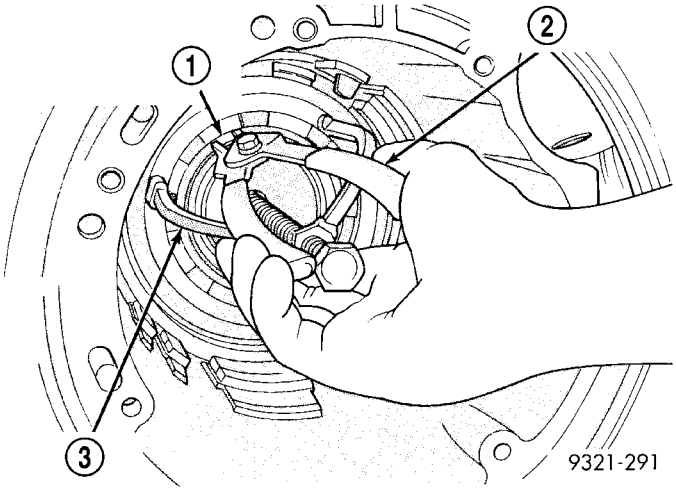

Fig. 75 Remove Snap Ring

1 - SNAP RING OPENING MUST BE BETWEEN SPRING LEVERS (AS SHOWN)
2 - SNAP RING PLIERS
3 - SPECIAL TOOL 5059A

(54) Remove the low/reverse belleville spring snap ring (1) (Fig. 75).

AUTOMATIC TRANSMISSION - 42RLE (Continued)

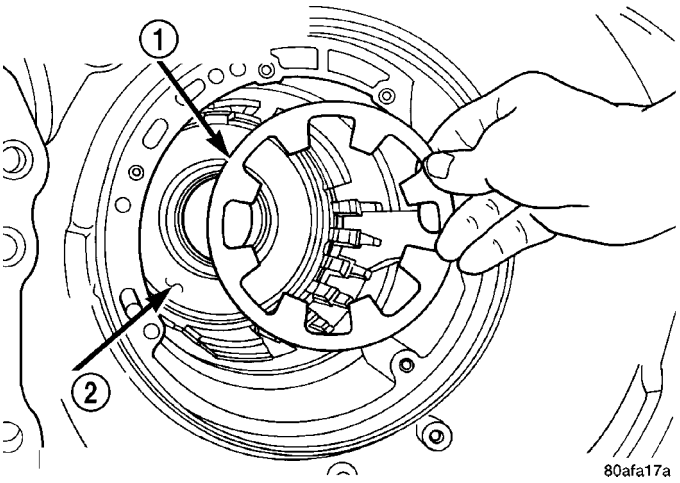

Fig. 76 Low/Reverse Piston Belleville Spring

1 - LOW/REVERSE PISTON RETURN SPRING
2 - PISTON

(55) Remove the low/reverse piston belleville spring (1) (Fig. 76).

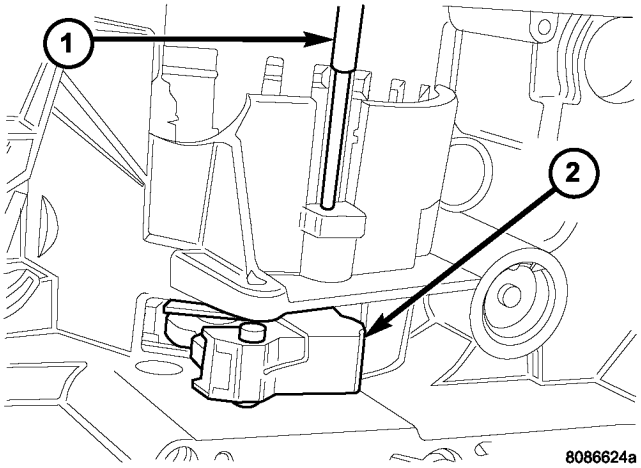

Fig. 77 Anchor Shaft Removal

1 - PIN PUNCH
2 - GUIDE BRACKET ASSEMBLY

(56) Remove the park sprag pivot retaining screw.

(57) Drive out the anchor shaft using suitable punch (1) (Fig. 77).

(58) Remove the guide bracket pivot pin (1) (Fig. 78). Inspect all components for wear and replace if necessary.

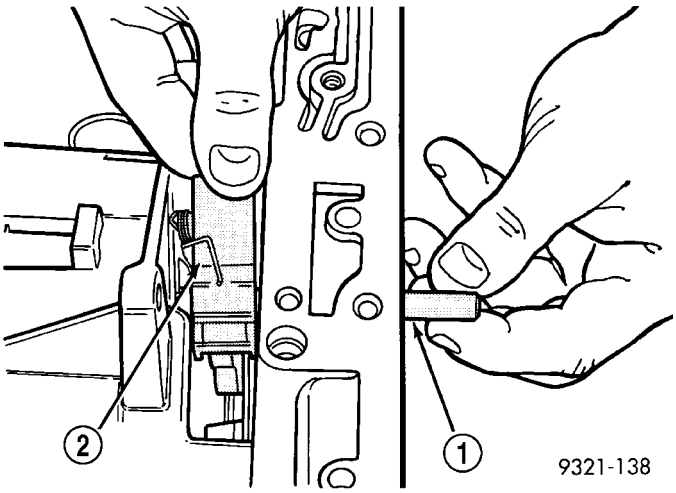

Fig. 78 Remove Guide Bracket Pivot Shaft

1 - PIVOT PIN
2 - GUIDE BRACKET ASSEMBLY

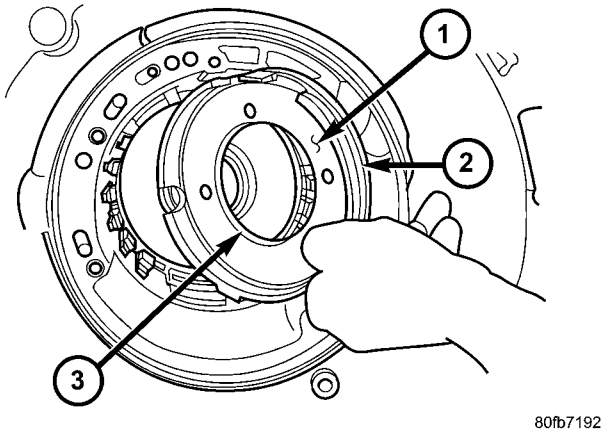

Fig. 79 Remove Low/Reverse Clutch Piston

1 - LOW/REVERSE CLUTCH PISTON
2 - D-RING SEAL
3 - D-RING SEAL

NOTE: The Low/Reverse Clutch Piston has bonded seals which are not individually serviceable. Seal replacement requires replacement of the piston assembly.

(59) Remove the low/reverse clutch piston (1) (Fig. 79).

(60) Remove the low/reverse piston retainer screws.

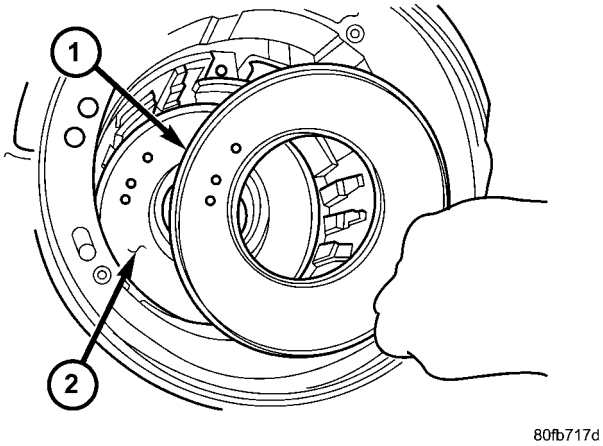

Fig. 80 Remove Piston Retainer

1 - LOW/REVERSE CLUTCH PISTON RETAINER
2 - GASKET

(61) Remove low/reverse piston retainer (1) (Fig. 80).

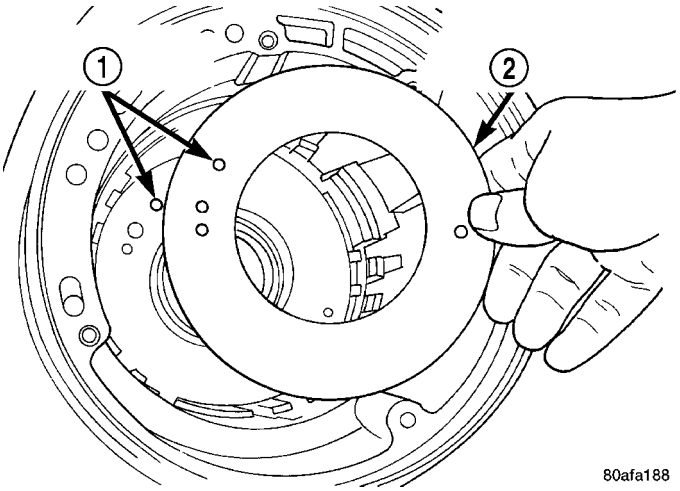

Fig. 81 Remove Piston Retainer Gasket

1 - GASKET HOLES MUST LINE UP
2 - LOW/REVERSE CLUTCH PISTON RETAINER GASKET

(62) Remove the low/reverse piston retainer gasket (2) (Fig. 81).

ASSEMBLY

NOTE: If the transmission assembly is being reconditioned (clutch/seal replacement) or replaced, it is necessary to perform the Quick Learn Procedure using the scan tool (Refer to 8 - ELECTRICAL/ ELECTRONIC CONTROL MODULES/TRANSMISSION CONTROL MODULE - STANDARD PROCEDURE).

(1) Install the output bearing cups using Special Tool - 5050A. (Fig. 82)

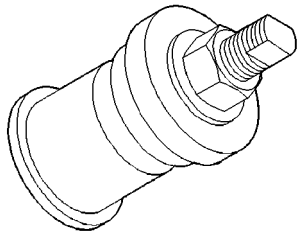

Fig. 82 Bearing Cup Installation Special Tool - 5050A

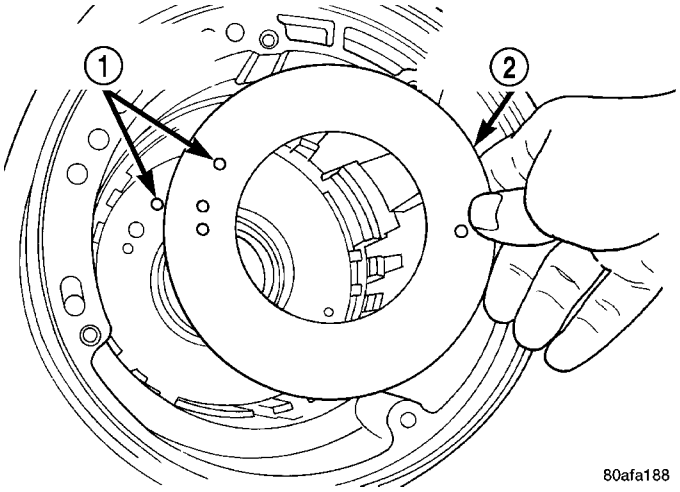

Fig. 83 Install Piston Retainer Gasket

1 - GASKET HOLES MUST LINE UP
2 - LOW/REVERSE CLUTCH PISTON RETAINER GASKET

(2) Install low/reverse piston retainer gasket (2) (Fig. 83).

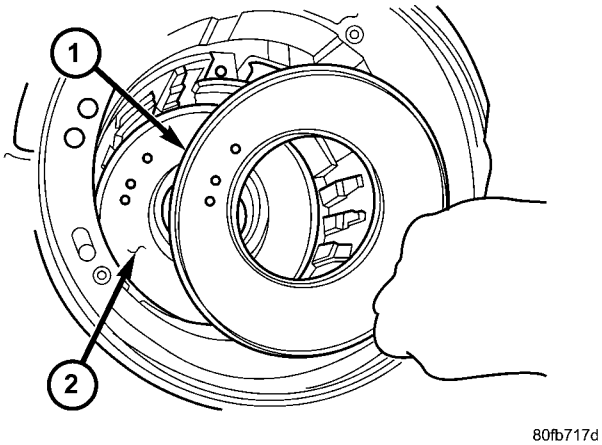

Fig. 84 Install Piston Retainer

1 - LOW/REVERSE CLUTCH PISTON RETAINER
2 - GASKET

(3) Install low/reverse piston retainer (1) (Fig. 84).

AUTOMATIC TRANSMISSION - 42RLE (Continued)

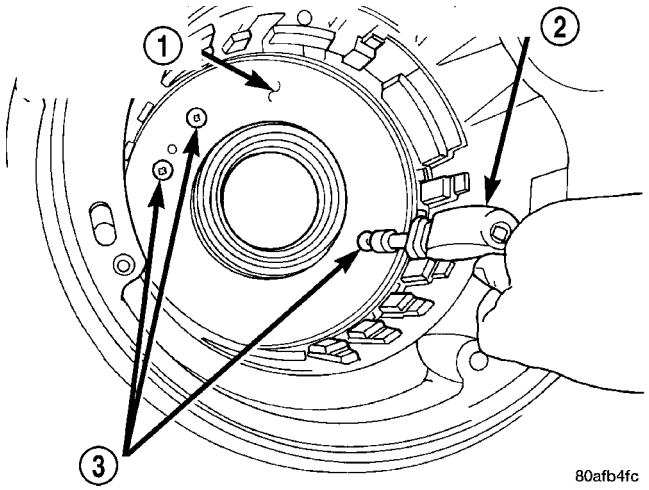

Fig. 85 Install Retainer Attaching Screws

1 - LOW/REVERSE CLUTCH PISTON RETAINER
2 - SCREWDRIVER
3 - TORX-LOC SCREWS

(4) Install low/reverse piston retainer-to-case screws (3) (Fig. 85) and torque to 5 N·m (45 in. lbs.).

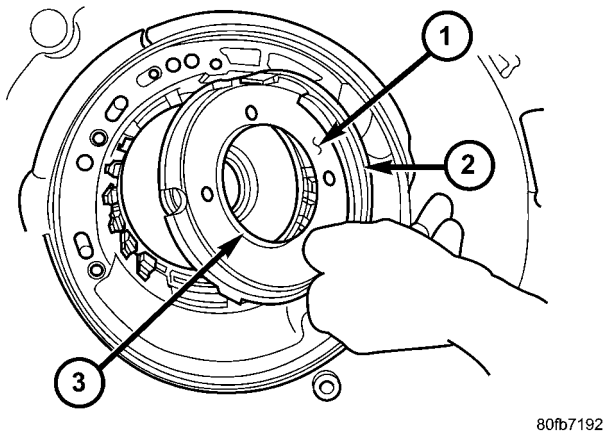

Fig. 86 Install Low/Reverse Clutch Piston

1 - LOW/REVERSE CLUTCH PISTON
2 - D-RING SEAL
3 - D-RING SEAL

NOTE: The Low/Reverse Clutch Piston has bonded seals which are not individually serviceable. Seal replacement requires replacement of the piston assembly.

(5) Install low/reverse clutch piston (1) (Fig. 86).

(6) Assemble guide bracket (1) assembly as shown in (Fig. 87), if necessary.

CAUTION: When installing, be sure guide bracket and split sleeve touch the rear of the transmission case.

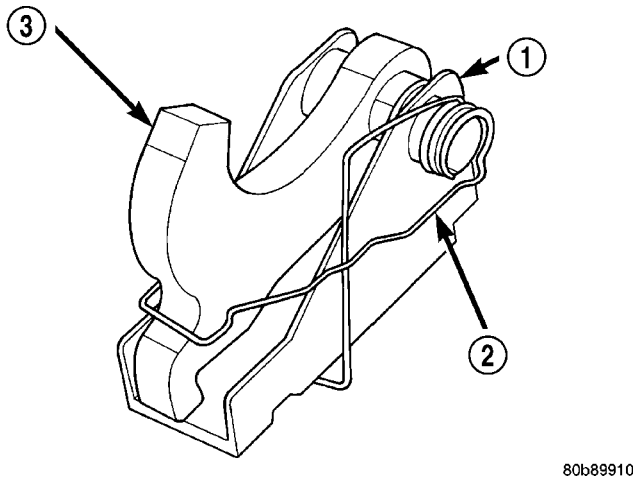

Fig. 87 Guide Bracket

1 - GUIDE BRACKET
2 - ANTIRATCHET SPRING (MUST BE ASSEMBLED AS SHOWN)
3 - PAWL

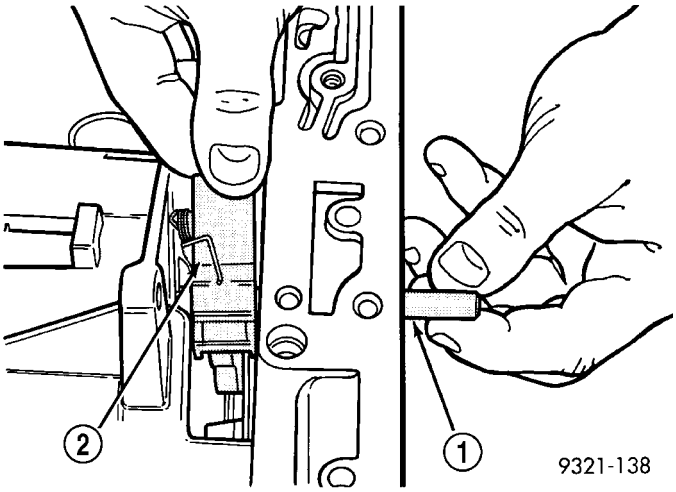

Fig. 88 Install Guide Bracket Pivot Pin

1 - PIVOT PIN
2 - GUIDE BRACKET ASSEMBLY

(7) Install guide bracket pivot pin (1) (Fig. 88).

(8) Install park sprag pivot retaining screw and torque to 4.5 N·m (40 in. lbs.).

AUTOMATIC TRANSMISSION - 42RLE (Continued)

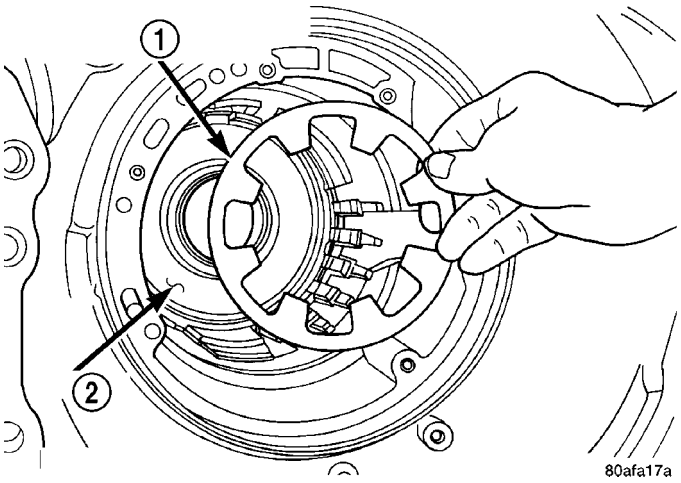

Fig. 89 Install Low/Reverse Piston Return Spring

1 - LOW/REVERSE PISTON RETURN SPRING
2 - PISTON

(9) Install low/reverse piston belleville spring (1) into position. (Fig. 89)

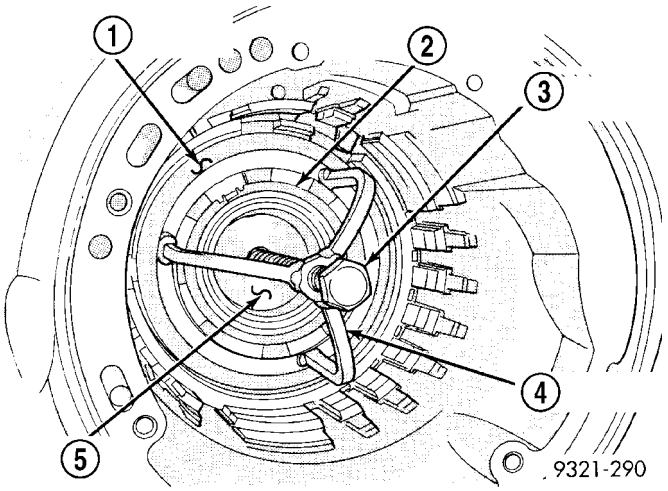

Fig. 90 Compressor Tool in Use

1 - LOW/REVERSE CLUTCH RETURN SPRING
2 - SNAP RING (INSTALL AS SHOWN)
3 - TOOL 5058A-3
4 - TOOL 5059A
5 - SPECIAL TOOL 6057

(10) Install and load low/reverse spring compressor tool (3, 4, 5) as shown in (Fig. 90) to facilitate snap ring (2) installation.

(11) Install snap ring (1) and remove compressor tool. (Fig. 91)

(12) Install rear carrier (4) front bearing cone. (Fig. 92)

Check output bearing preload. **Output bearing preload must be checked and/or adjusted if any of the following items have been replaced:**

- Output shaft (rear carrier assembly)
- Output shaft bearings
- Transmission case

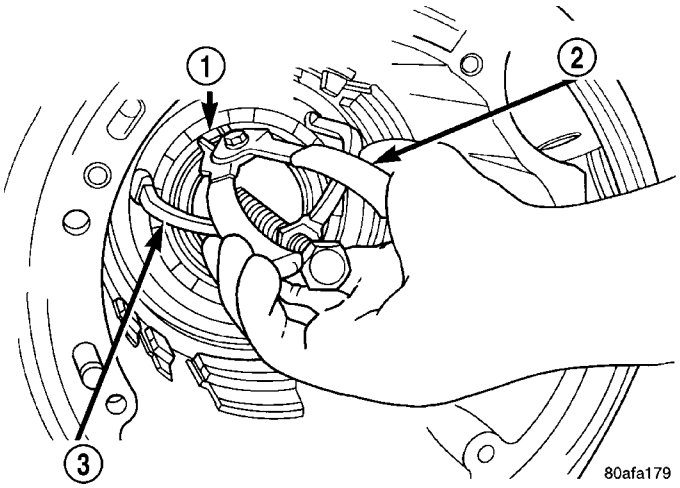

Fig. 91 Install Snap Ring

1 - SNAP RING OPENING MUST BE BETWEEN SPRING LEVERS (AS SHOWN)
2 - SNAP RING PLIERS
3 - TOOL 6057

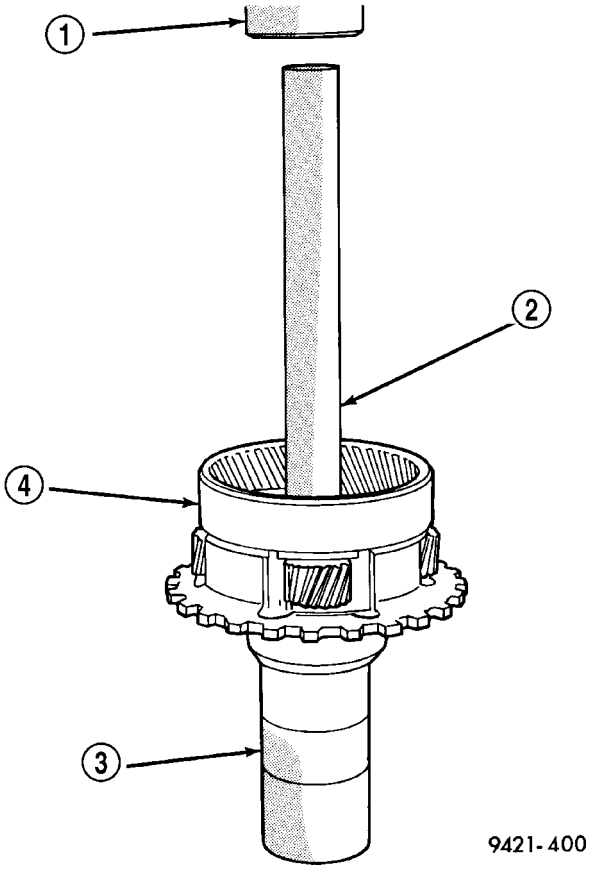

Fig. 92 Install Rear Carrier Front Bearing Cone

1 - ARBOR PRESS
2 - SPECIAL TOOL C-4171
3 - SPECIAL TOOL 6052
4 - REAR CARRIER

AUTOMATIC TRANSMISSION - 42RLE (Continued)

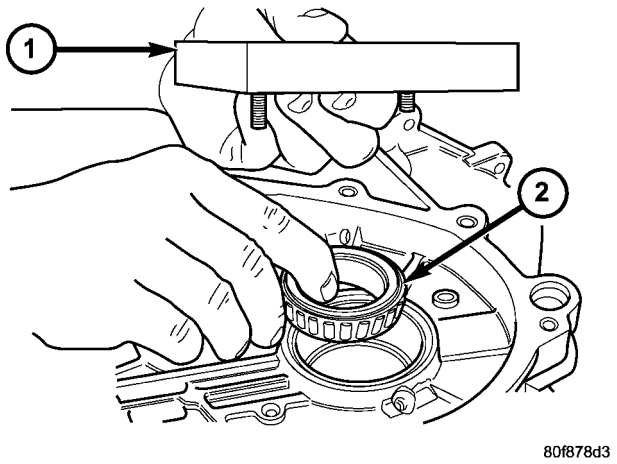

Fig. 93 Bearing Installation

1 - SPECIAL TOOL 6618-A
2 - REAR OUTPUT SHAFT BEARING

(13) **PRELOAD CHECK/SHIM SELECTION:** Install rear output shaft bearing cone and special tool 6618A (1) (Fig. 93).

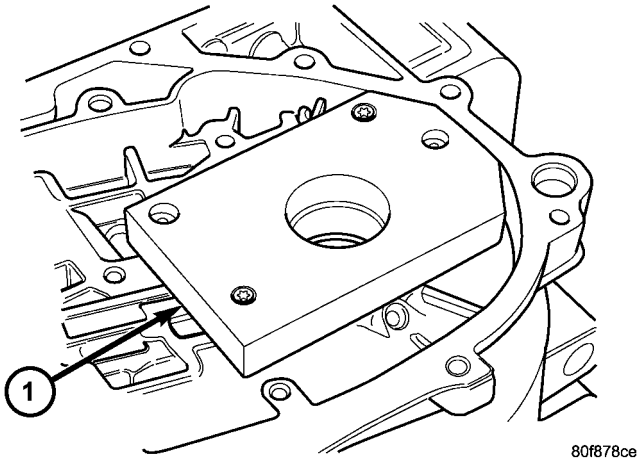

Fig. 94 Special Tool Installed

1 - SPECIAL TOOL 6618-A

(14) Install special tool 6618A (1) (Fig. 94). Lightly tighten retaining screws. Screws should be below the plate surface, but do not snug screws.

(15) Turn case over on arbor press so that the plate is resting on the press base. **CAUTION: The output shaft will extend through the hole of tool 6618A. Ensure your press table has clearance for the output shaft.**

(16) Install shim (1) on output shaft (2) (Fig. 95). Apply small amount of petrolatum onto the shim to hold it in place. Use the original shim as a starting point. If original shim is not available, use the thickest shim available.

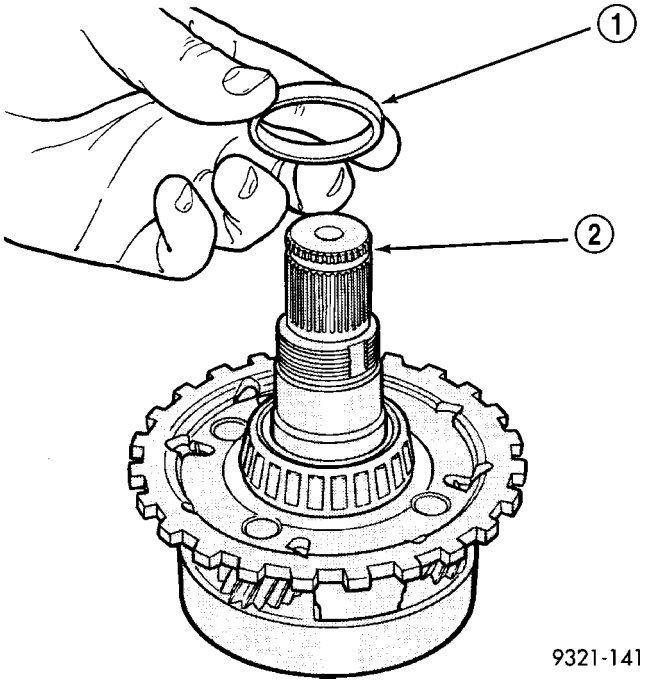

Fig. 95 Shim Installation

1 - SHIM
2 - OUTPUT SHAFT

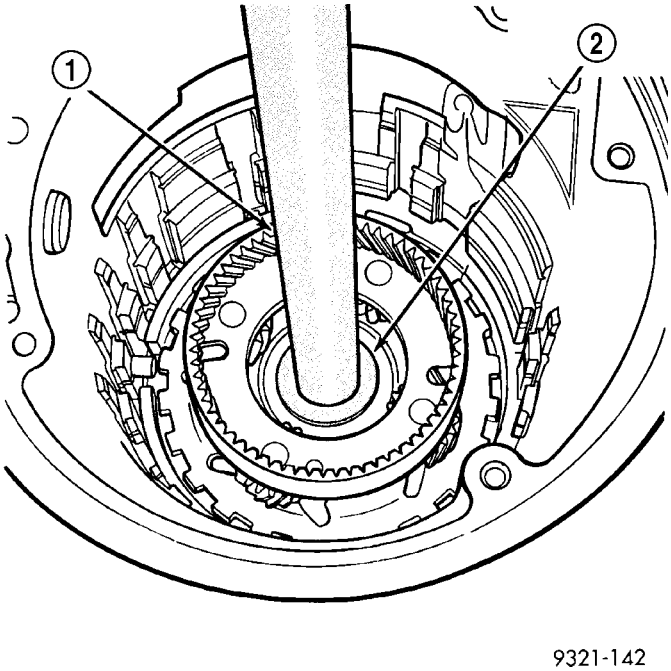

Fig. 96 Press Shaft Into Case

1 - SPECIAL TOOL C-4171 AND C-4171-2
2 - SPECIAL TOOL MD-998911

(17) Install output shaft/rear carrier into rear bearing. The shaft must be pressed into position. Use special tool MD-998911 (Disc) (2) and C- 4171 and C4171-2 (Handle) (1) to press shaft into rear bearing (Fig. 96).

AUTOMATIC TRANSMISSION - 42RLE (Continued)

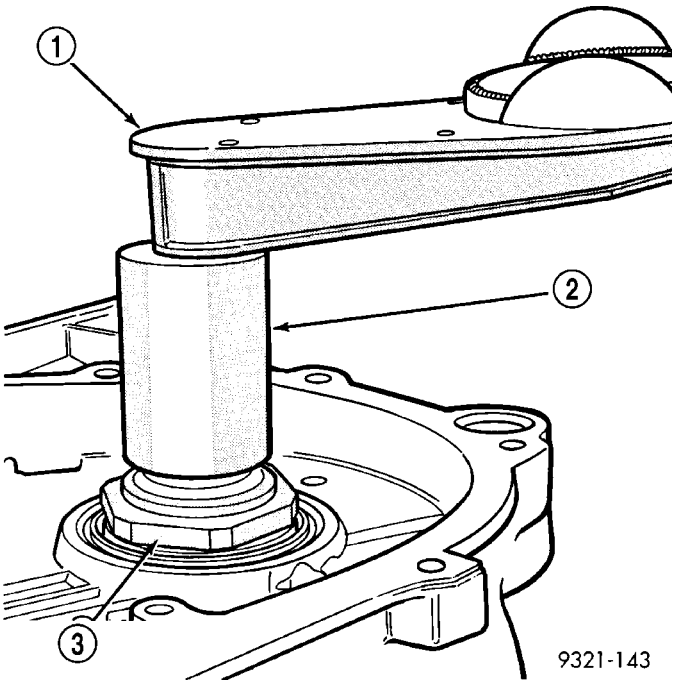

Fig. 97 Checking Turning Torque

1 - TORQUE WRENCH
2 - SPECIAL TOOL 6498-A
3 - OUTPUT SHAFT NUT

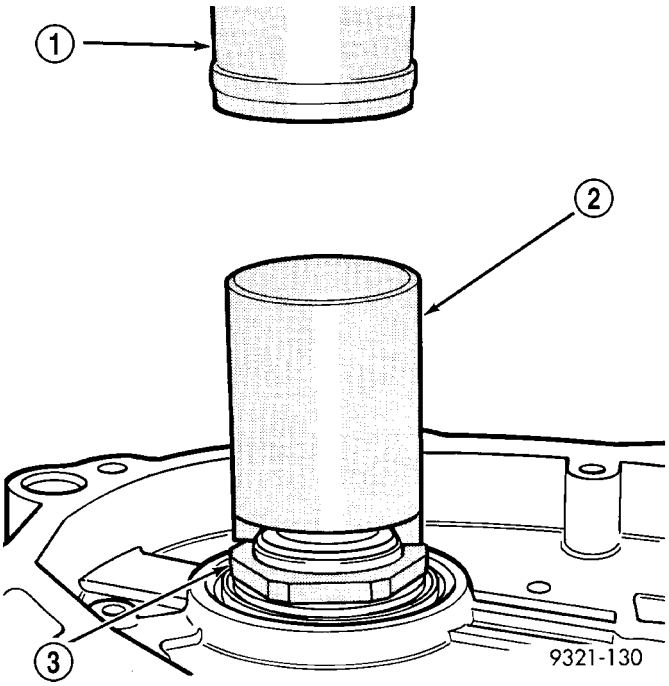

Fig. 98 Staking Output Shaft Nut - Typical

1 - ARBOR PRESS
2 - STAKING TOOL - 6639
3 - NEW NUT

CAUTION: Do not re-use old output shaft nut because the removed stake weakens the nut flange. Using special tools 6497 and 6498-A, install new output shaft nut. Tighten new output shaft nut to 271 N·m (200 ft. lbs.).

(18) Check the turning torque (1) of the output shaft (Fig. 97). The shaft should have 1 to 8 in. lbs. of turning torque. If the turning torque is **higher than** 8 in. lbs., install a thicker shim. If turning torque is **less than** 1 in. lb., install a thinner shim. Make sure there is no end play.

CAUTION: Failure to stake nut could allow the nut to back-off during use.

(19) The new nut (3) must be staked after the correct turning torque is obtained (Fig. 98). Use special tool 6639 (2) to stake output shaft nut.

(20) Verify that the nut has been properly staked (Fig. 99) to the output shaft.

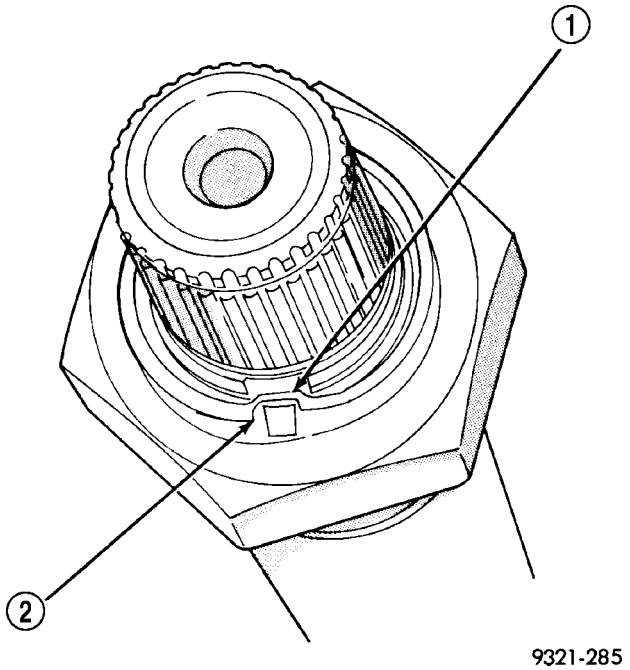

Fig. 99 Properly Staked Nut

1 - BOTTOMED IN SLOT
2 - CORRECTLY STAKED NUT

AUTOMATIC TRANSMISSION - 42RLE (Continued)

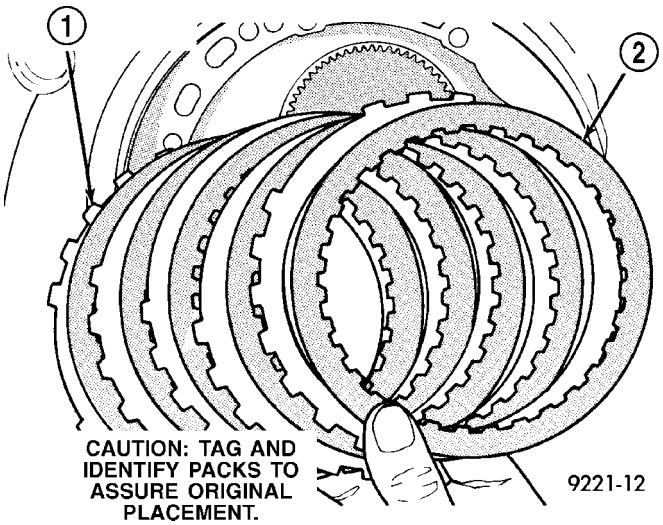

Fig. 100 Install Low/Reverse Clutch Pack

1 - CLUTCH PLATES (5)
2 - CLUTCH DISCS (5)

(21) Install low/reverse clutch pack (1, 2) (Fig. 100). Leave uppermost disc out to facilitate snap ring installation.

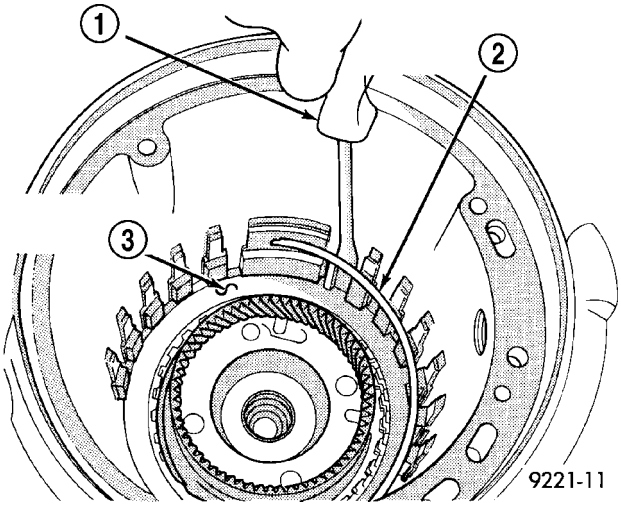

Fig. 101 Install Low/Reverse Reaction Plate Snap Ring

1 - SCREWDRIVER
2 - LOW/REVERSE REACTION PLATE FLAT SNAP RING
3 - DO NOT SCRATCH CLUTCH PLATE

(22) Install low/reverse reaction plate snap ring (2) (Fig. 101).

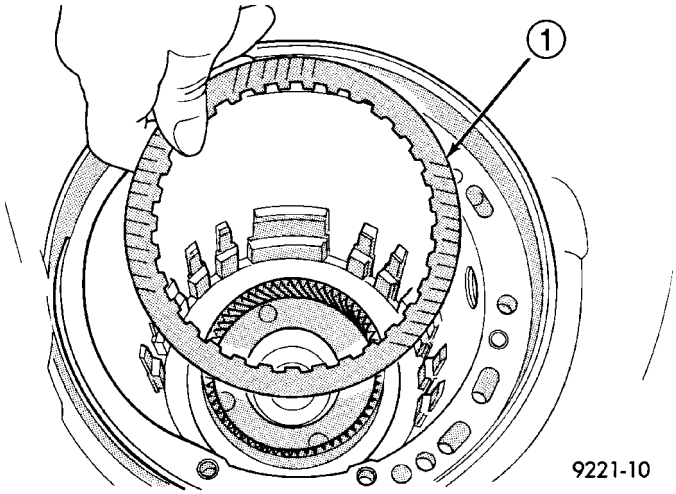

Fig. 102 Install One Disc

1 - ONE DISC FROM LOW/REVERSE CLUTCH

(23) Install one low/reverse clutch disc (1) (Fig. 102).

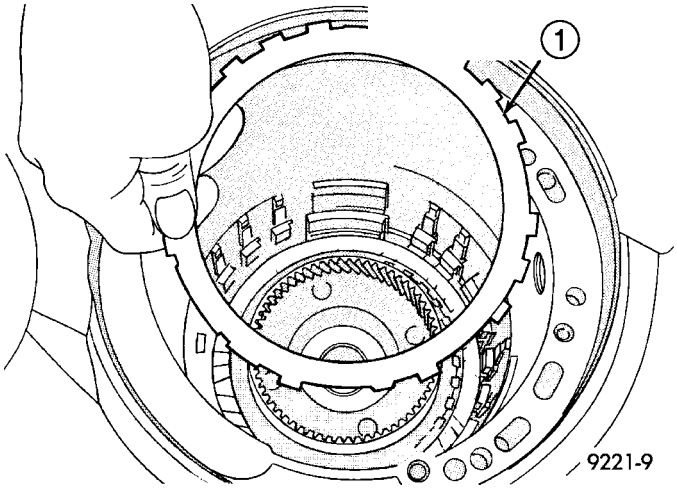

Fig. 103 Install Low/Reverse Reaction Plate

1 - LOW/REVERSE REACTION PLATE (FLAT SIDE UP)

(24) Install low/reverse reaction plate (1) with flat side up. (Fig. 103)

AUTOMATIC TRANSMISSION - 42RLE (Continued)

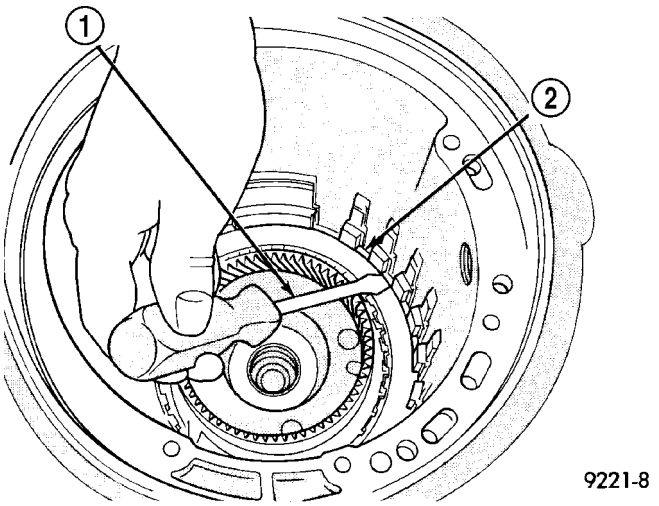

Fig. 104 Snap Ring Installed

1 - SCREWDRIVER
2 - TAPERED SNAP RING (INSTALL AS SHOWN)

(25) Install a new tapered snap ring (2) (Fig. 104) (tapered side out).

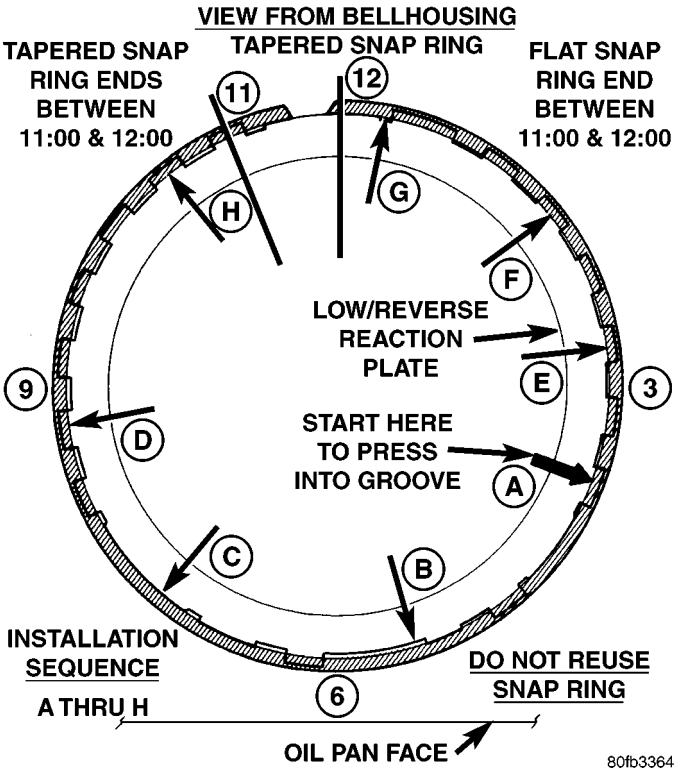

Fig. 105 Tapered Snap Ring Instructions

(26) Make sure that the snap ring ends (Fig. 105) are oriented as shown.

(27) Measure low/reverse clutch pack. Set up dial indicator (1) (Fig. 106) as shown. Press down clutch pack with finger and zero dial indicator. Record measurement in four (4) places and take average reading.

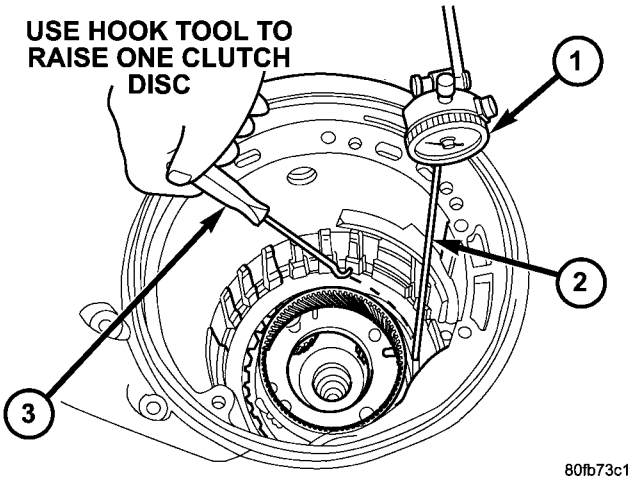

Fig. 106 Check Low/Reverse Clutch Clearance

1 - DIAL INDICATOR
2 - DIAL INDICATOR TIP TOOL 6268
3 - HOOK TOOL

Low/Reverse clutch pack clearance is 0.84 to 1.60 mm (0.033 to 0.063 inch).

(28) Select the proper low/reverse reaction plate to achieve specifications.

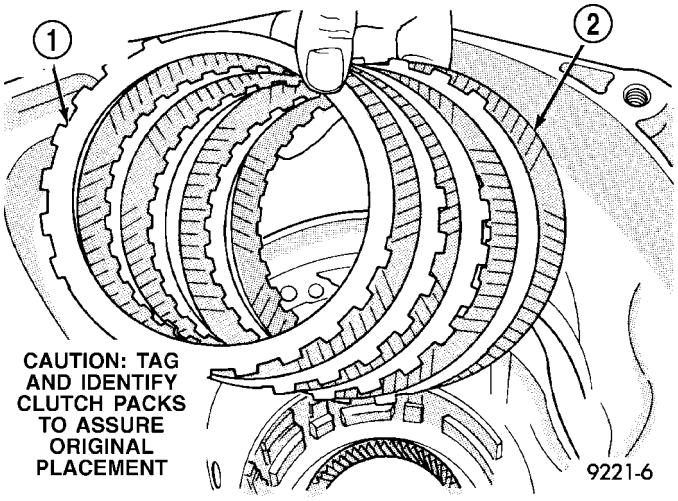

Fig. 107 Install 2/4 Clutch Pack

1 - CLUTCH PLATE (4)
2 - CLUTCH DISC (4)

(29) Install 2/4 clutch pack (1, 2) (Fig. 107).

NOTE: The 2/4 Clutch Piston has bonded seals which are not individually serviceable. Seal replacement requires replacement of the piston assembly.

AUTOMATIC TRANSMISSION - 42RLE (Continued)

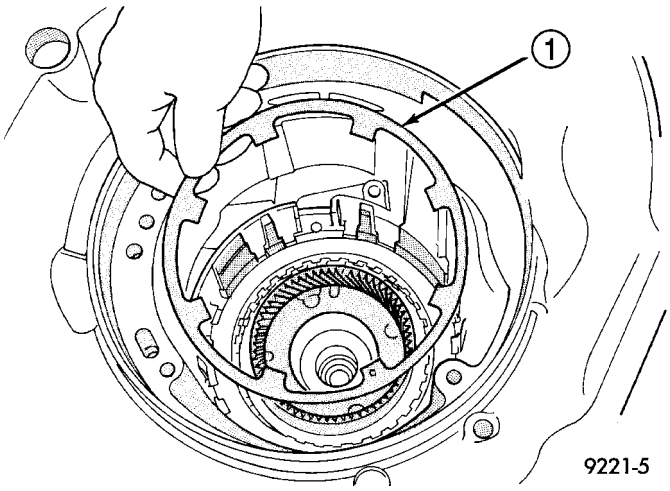

Fig. 108 Install 2/4 Clutch Return Spring

1 - 2/4 CLUTCH RETURN SPRING

(30) Install 2/4 clutch belleville spring (1) (Fig. 108).

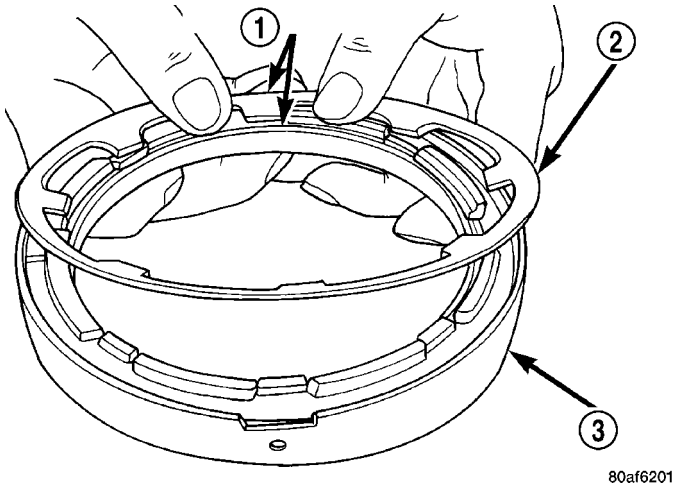

Fig. 109 Proper Orientation of 2/4 Clutch

1 - NOTE POSITION
2 - RETURN SPRING
3 - 2/4 CLUTCH RETAINER

(31) Verify the proper orientation of the return spring (2) (Fig. 109) to the 2/4 retainer (3).

(32) Install 2/4 clutch retainer (1) (Fig. 110).

NOTE: Verify that Tool 5058A (1) is centered properly over the 2/4 clutch retainer (4) before compressing. If necessary, fasten the 5058A bar to the bellhousing flange with any combination of locking pliers and bolts to center the tool properly.

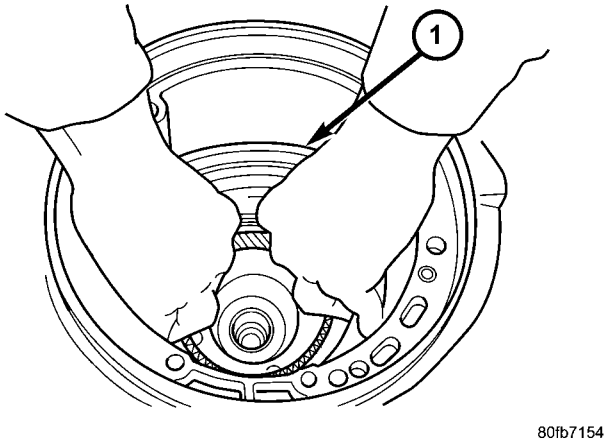

Fig. 110 Install 2/4 Clutch Retainer

1 - 2/4 CLUTCH RETAINER

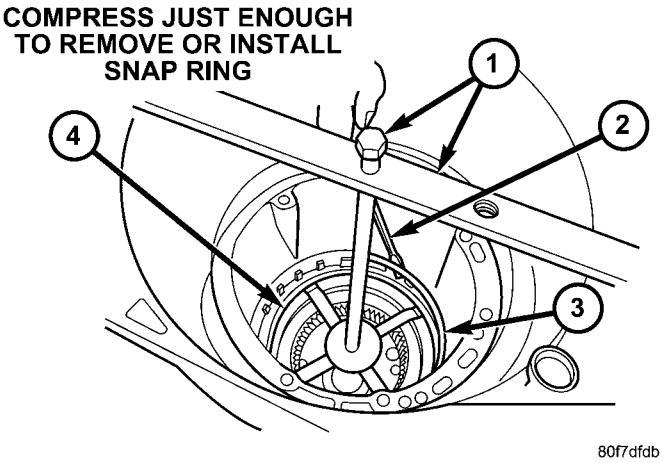

Fig. 111 Remove 2/4 Clutch Retainer Snap Ring

1 - TOOL 5058
2 - SCREWDRIVER
3 - SNAP RING
4 - 2/4 CLUTCH RETAINER

(33) Set up Tool 5058 (1) (Fig. 111) as shown. Compress 2/4 clutch just enough to facilitate snap ring installation.

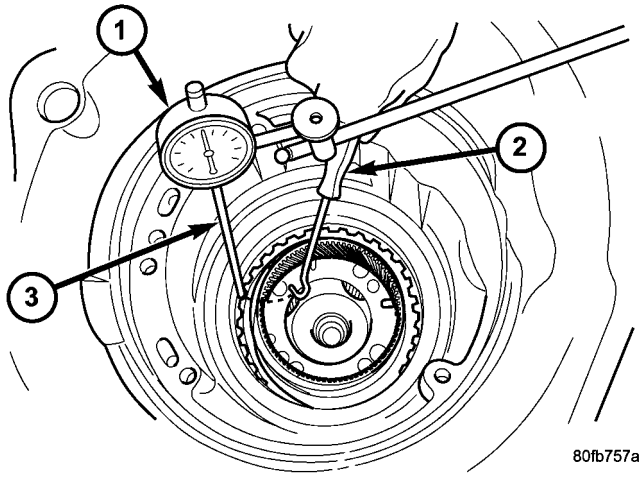

Fig. 112 Check 2/4 Clutch Clearance

1 - DIAL INDICATOR
2 - HOOK TOOL
3 - DIAL INDICATOR TIP TOOL 6268

(34) **Measure 2/4 clutch clearance:** Set up dial indicator (1) (Fig. 112) as shown. Press down clutch pack with finger and zero dial indicator. Record measurement in four (4) places and take average reading. **The 2/4 clutch pack clearance is 0.76 to 2.64 mm (0.030 to 0.104 inch).** If not within specifications, the clutch is not assembled properly or is excessively worn. **There is no adjustment for the 2/4 clutch clearance.**

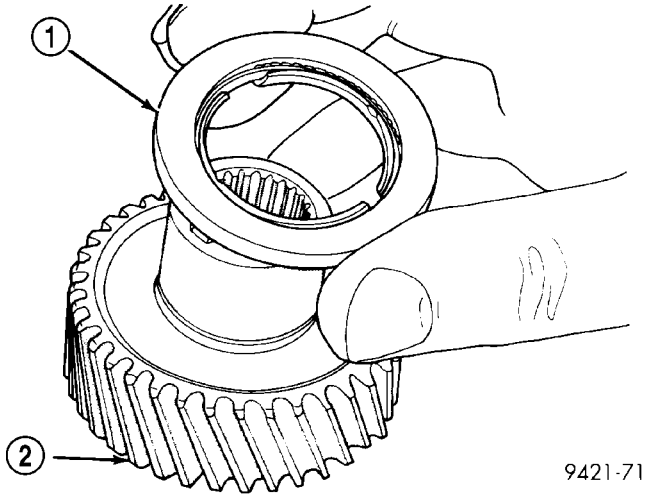

Fig. 113 Number 7 Bearing

1 - #7 BEARING
2 - REAR SUN GEAR

(35) Install the #7 needle bearing (1) to the rear sun gear (2) (Fig. 113). **The number 7 needle bearing has three antireversal tabs and is common with the number 5 and number 2 position. The orientation should allow the bearing to seat flat against the rear sun gear. A small amount of petrolatum can be used to hold the bearing to the rear sun gear.**

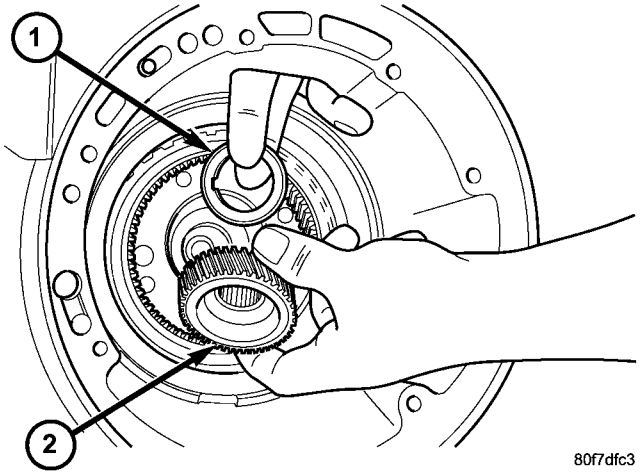

Fig. 114 Install Rear Sun Gear

1 - #7 NEEDLE BEARING
2 - REAR SUN GEAR

(36) Install rear sun gear (2) and #7 needle bearing (1) (Fig. 114).

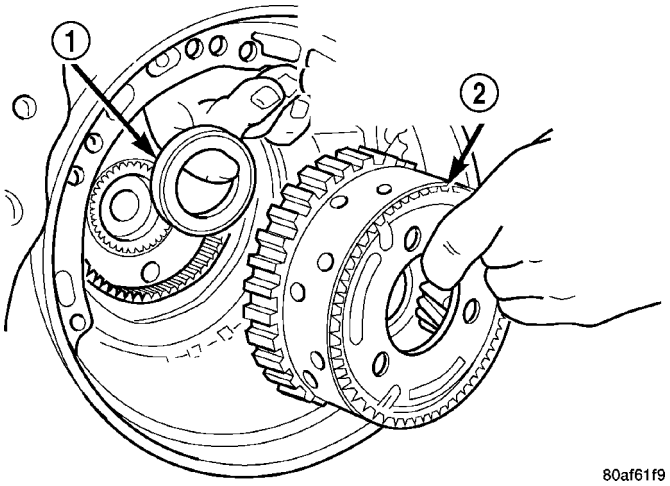

Fig. 115 Install Front Carrier/Rear Annulus

1 - #6 NEEDLE BEARING
2 - FRONT CARRIER AND REAR ANNULUS ASSEMBLY (TWIST AND PULL OR PUSH TO REMOVE OR INSTALL).

(37) Install front carrier/rear annulus assembly (2) and #6 needle bearing (1) (Fig. 115).

AUTOMATIC TRANSMISSION - 42RLE (Continued)

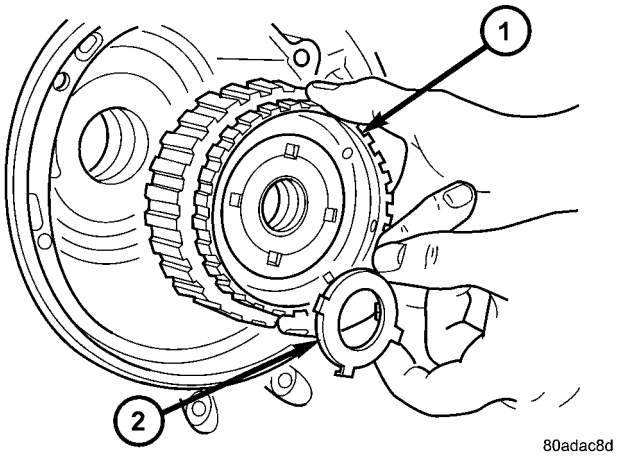

Fig. 116 Install Front Sun Gear Assembly

1 - FRONT SUN GEAR ASSEMBLY
2 - #4 THRUST WASHER (FOUR TABS)

(38) Install front sun gear assembly (1) and #4 thrust washer (2) (Fig. 116).

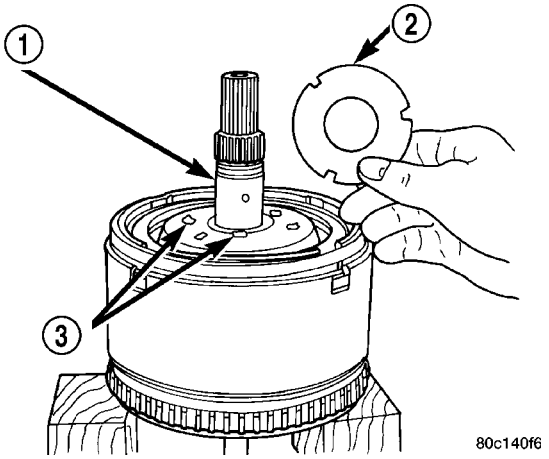

Fig. 117 Install #4 Thrust Plate

1 - OVERDRIVE SHAFT ASSEMBLY
2 - #4 THRUST PLATE (SELECT)
3 - PETROLATUM FOR RETENTION

(39) Determine proper #4 thrust plate thickness. Select the thinnest available #4 thrust plate.

(40) Install #4 thrust plate (2) (Fig. 117) using petrolatum to hold into position.

(41) Install input clutch assembly. Ensure the input clutch assembly is completely seated by viewing position through input speed sensor hole. **If the speed sensor tone wheel is not centered in the opening, the input clutches assembly is not seated properly.**

(42) Remove the oil pump o-ring (2) (Fig. 118) and install oil pump and gasket to transmission. **Use screw-in dowels or phillips-head screwdrivers to align pump to case. Be sure to reinstall O-ring on oil pump after selecting the proper No. 4 thrust plate.**

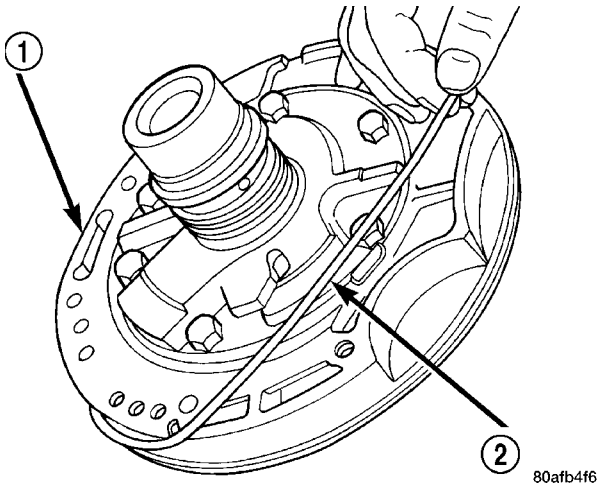

Fig. 118 Remove Oil Pump O-Ring

1 - OIL PUMP ASSEMBLY
2 - O-RING

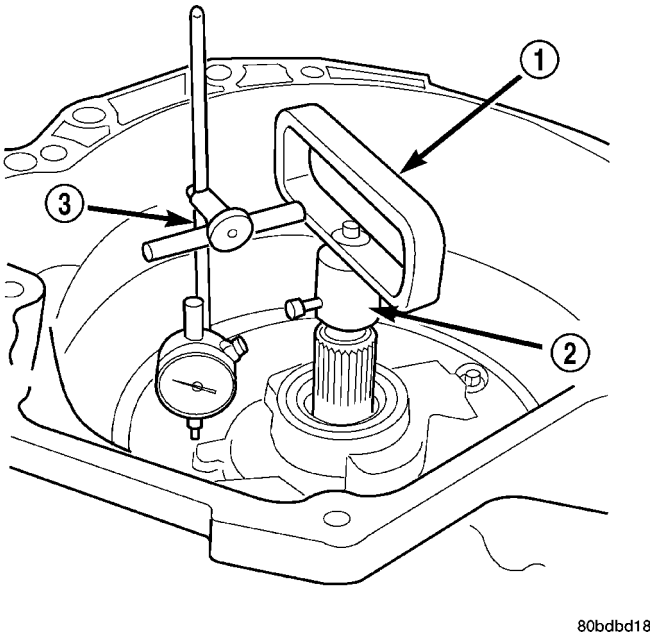

Fig. 119 Measure Input Shaft End Play Using Tool 8266 - Typical

1 - TOOL 8266-8
2 - TOOL 8266-2
3 - TOOL C-3339

(43) Measure the input shaft end play with the transmission in the vertical position. This will ensure that the measurement will be accurate.

(44) Set up and measure endplay using End Play Set 8266 (1, 2) (Fig. 119) and Dial Indicator Set C3339 (3) as shown.

AUTOMATIC TRANSMISSION - 42RLE (Continued)

(45) Measure input shaft end play. **Input shaft end play must be 0.127 to 0.635 mm (0.005 to 0.025 inch).** For example, if end play reading is 0.055 inch, select No. 4 Thrust Plate which is 0.071 to 0.074 thick. This should provide an input shaft end play reading of 0.020 inch, which is within specifications.

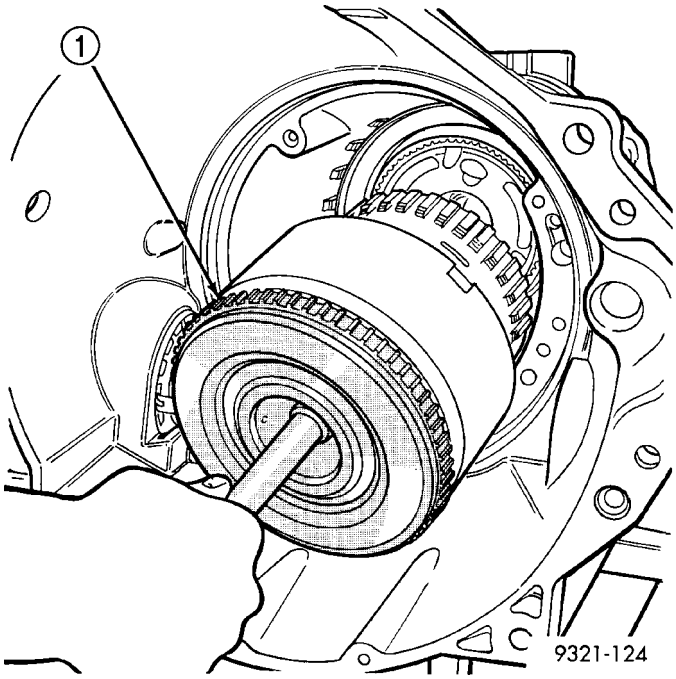

Fig. 120 Install Input Clutch Assembly

1 - INPUT CLUTCH ASSEMBLY

(46) Remove oil pump, gasket, and input clutch assembly to gain access to and install proper #4 thrust plate.

(47) Install input clutch assembly (1) with proper thrust plate (Fig. 120).

(48) Install #1 caged needle bearing (1) (Fig. 121).

CAUTION: By-pass valve MUST be replaced if transmission failure occurs.

(49) Replace cooler by-pass valve (1) (Fig. 122) if transmission failure has occurred.

NOTE: To align oil pump, gasket, and case during installation, use threaded dowels or phillips screwdrivers.

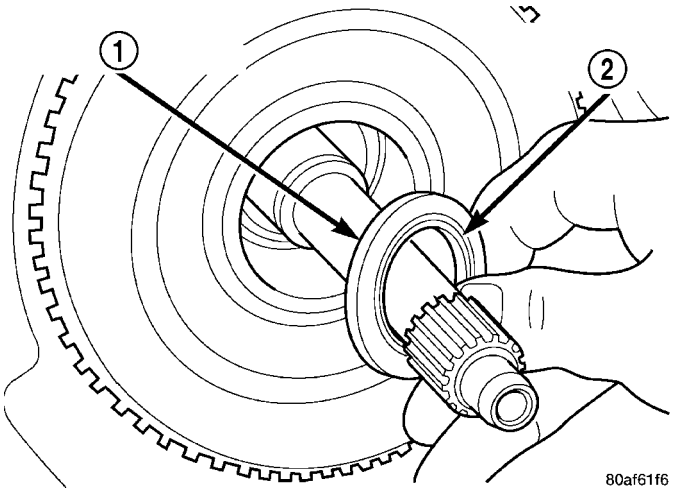

Fig. 121 Install No. 1 Caged Needle Bearing

1 - #1 CAGED NEEDLE BEARING
2 - NOTE: TANGED SIDE OUT

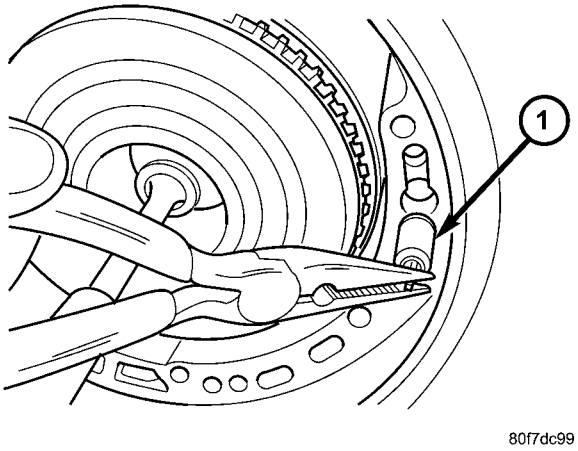

Fig. 122 Install By-Pass Valve

1 - BYPASS VALVE

AUTOMATIC TRANSMISSION - 42RLE (Continued)

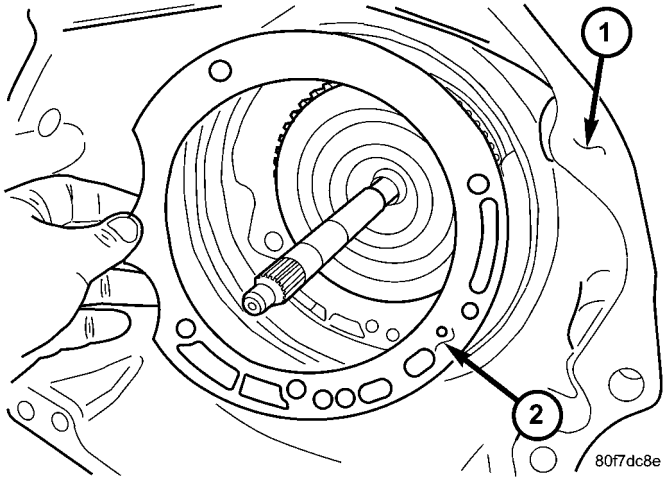

Fig. 123 Install Oil Pump Gasket

1 - BELLHOUSING
2 - OIL PUMP GASKET

(50) Install oil pump gasket (2) (Fig. 123).

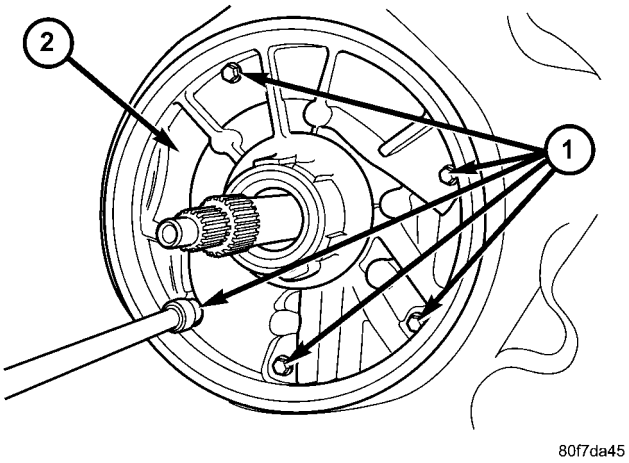

Fig. 124 Install Oil Pump Attaching Bolts

1 - BOLTS
2 - OIL PUMP

(51) Install oil pump (2) (Fig. 124) and torque oil pump-to-case bolts (1) to 30 N·m (265 in. lbs.). Do not reuse original oil pump bolts.

(52) Install low/reverse accumulator (1) (Fig. 125) as shown.

(53) Install low/reverse accumulator plug (2) (Fig. 126).

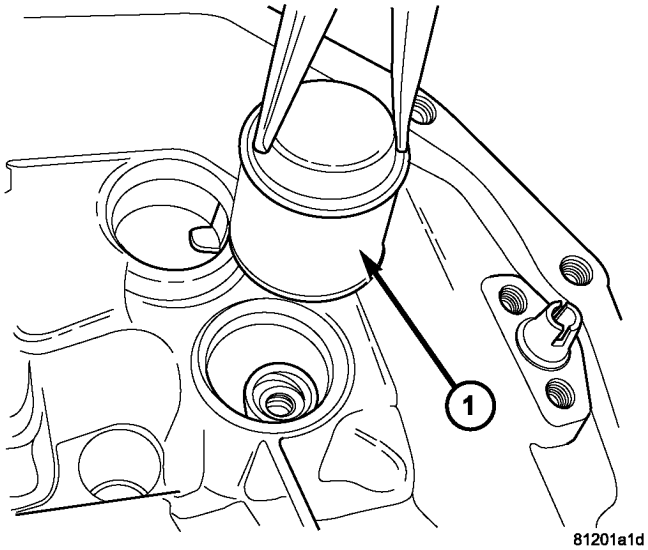

Fig. 125 Low/Reverse Accumulator Piston

1 - ACCUMULATOR PISTON

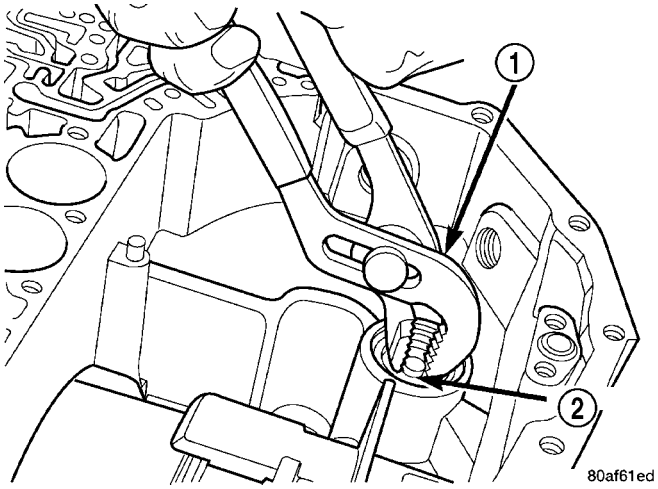

Fig. 126 Install Low/Reverse Accumulator Plug

1 - ADJUSTABLE PLIERS
2 - PLUG

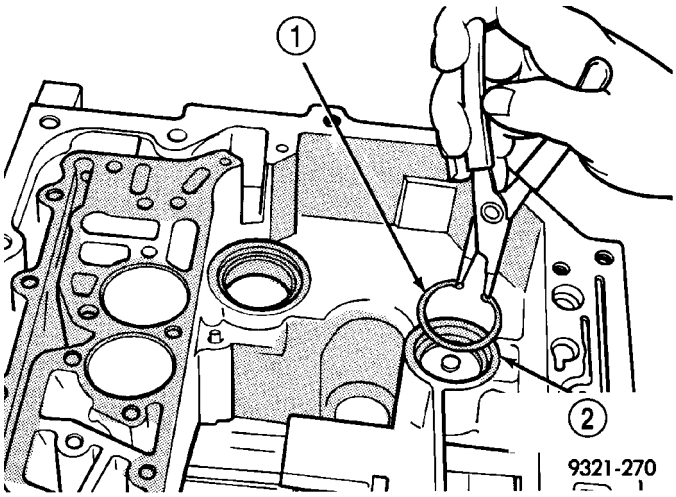

Fig. 127 Install Low/Reverse Accumulator Snap Ring

1 - SNAP RING
2 - LOW/REVERSE ACCUMULATOR

(54) Install low/reverse accumulator snap ring (1) (Fig. 127).

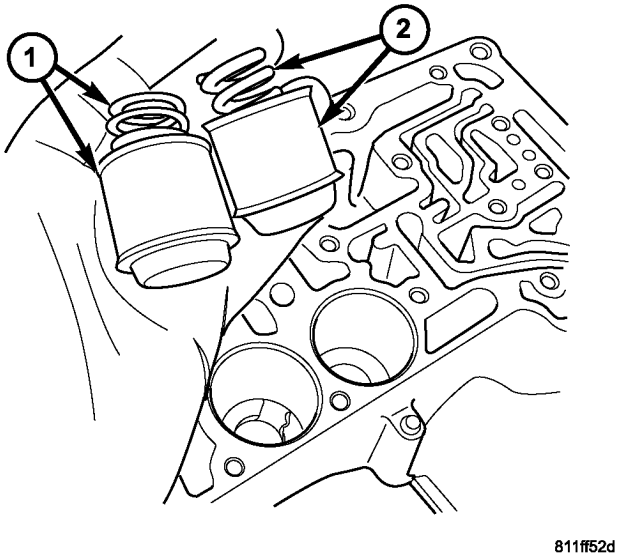

Fig. 128 Underdrive and Overdrive Accumulators

1 - OVERDRIVE PISTON AND SPRING
2 - UNDERDRIVE PISTON AND SPRING

(55) Install underdrive (2) and overdrive (1) accumulators and springs (Fig. 128).

CAUTION: Do not handle the valve body by the manual shaft. Damage could result.

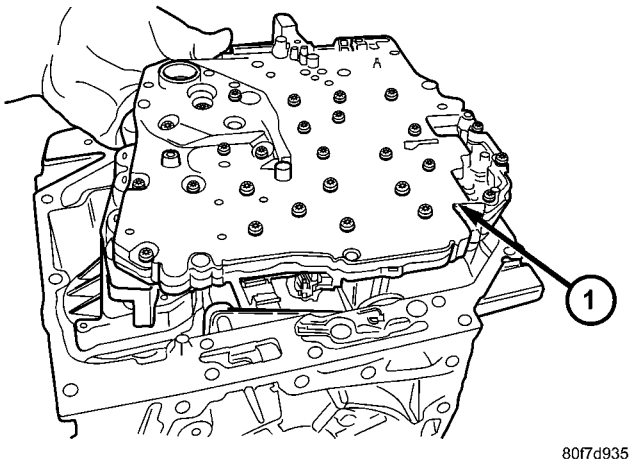

Fig. 129 Install Valve Body Onto Transmission

1 - VALVE BODY

(56) Install valve body (1) (Fig. 129) into place as shown.

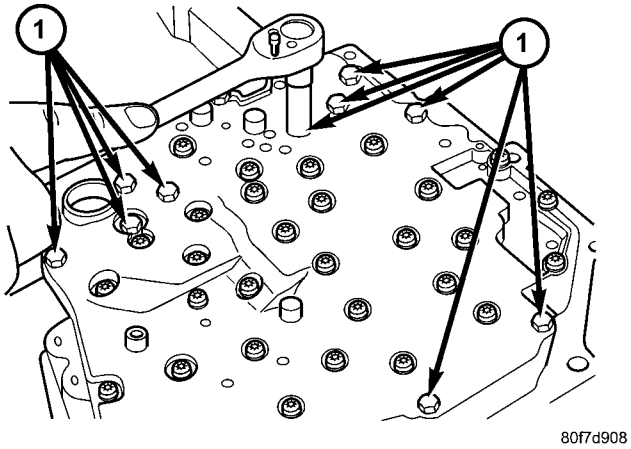

Fig. 130 Install Valve Body Bolts (7)

1 - BOLTS

(57) Install seven (7) valve body-to-case bolts (1) (Fig. 130) and torque to 12 N·m (105 in. lbs.).

AUTOMATIC TRANSMISSION - 42RLE (Continued)

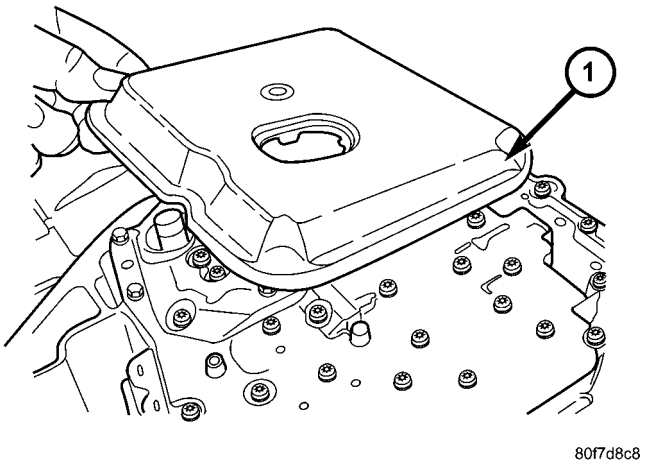

Fig. 131 Install Transmission Filter

1 - TRANSMISSION FILTER

(58) Install transmission oil filter (1) (Fig. 131). Tighten the bolts to 5 N·m (45 in. lbs.).

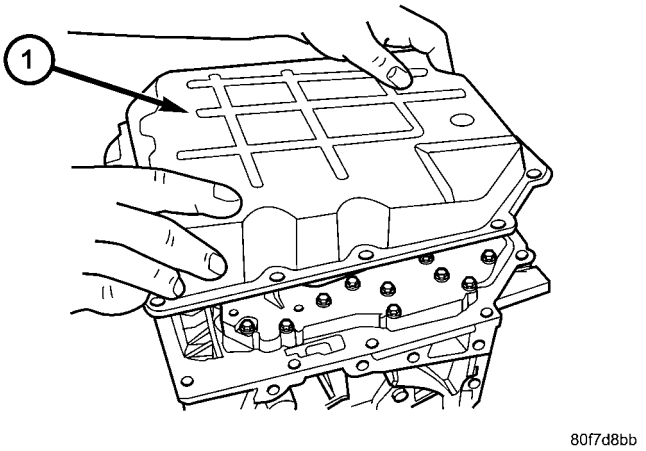

Fig. 132 Install Transmission Oil Pan

1 - TRANSMISSION OIL PAN

(59) Install transmission oil pan (1) (Fig. 132) with a bead of Mopar® ATF RTV.

NOTE: Before installing the oil pan bolt in the bolt hole located between the torque converter clutch on and U/D clutch pressure tap circuits (Fig. 133), it will be necessary to replentish the sealing patch on the bolt using Mopar® Lock & Seal Adhesive.

(60) Install and torque the oil pan-to-case bolts to 20 N·m (14.5 ft. lbs.).

NOTE: Before installing either speed sensor bolt, it will be necessary to replentish the sealing patch on the bolt using Mopar® Lock & Seal Adhesive.

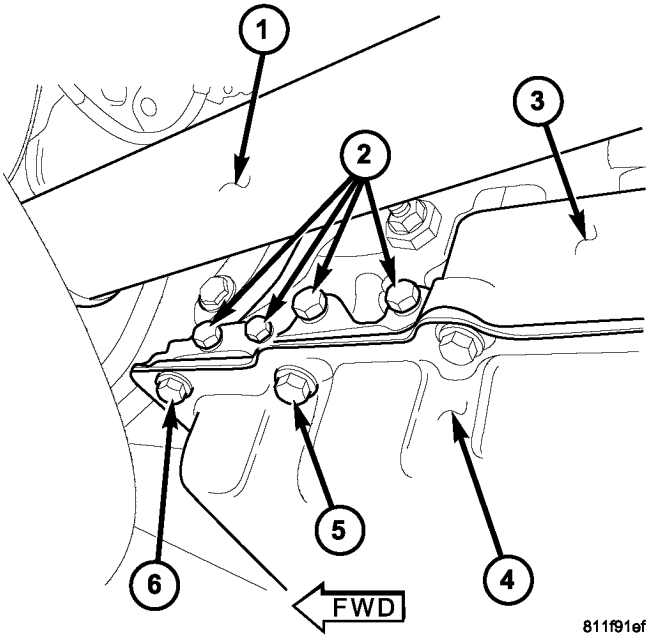

Fig. 133 Pan Fastener

1 - FRONT DRIVESHAFT
2 - PRESSURE PORTS
3 - TRANSMISSION CASE
4 - TRANSMISSION OIL PAN
5 - SECOND TRANSMISSION OIL PAN BOLT ON LEFT SIDE
6 - FIRST TRANSMISSION OIL PAN BOLT

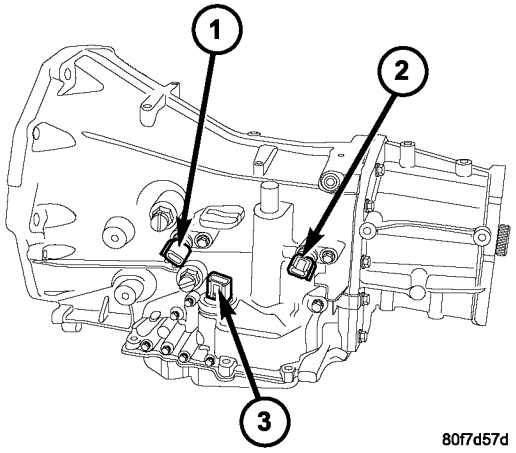

Fig. 134 Input and Output Speed Sensors and Transmission Range Sensor

1 - INPUT SPEED SENSOR
2 - OUTPUT SPEED SENSOR
3 - TRANSMISSION RANGE SENSOR

(61) Install both speed sensors (1, 2) (Fig. 134) into the transmission case. Torque the speed sensor bolts to 9 N·m (80 in. lbs.).

(62) As a final check of the transmission, measure the input shaft end play. This will indicate when a #4 thrust plate change is required. The #4 thrust plate

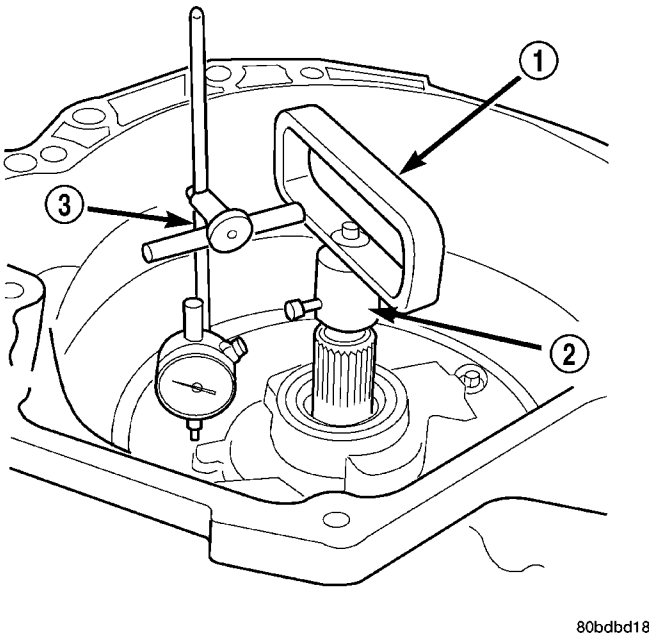

Fig. 135 Measure Input Shaft End Play Using Tool 8266 - Typical

1 - TOOL 8266-8
2 - TOOL 8266-2
3 - TOOL C-3339

is located behind the overdrive clutch hub. Attach a dial indicator to transmission bell housing with its plunger seated against end of input shaft (Fig. 135). Move input shaft in and out to obtain end play reading. **Input shaft end play must be 0.127 to 0.635 mm (0.005 to 0.025 inch).** If not within specifications, make the necessary thrust plate adjustment.

(63) On 4X2 transmissions, perform the following, if necessary:

(a) Install the extension shaft bearing (2) (Fig. 136) onto the extension shaft.

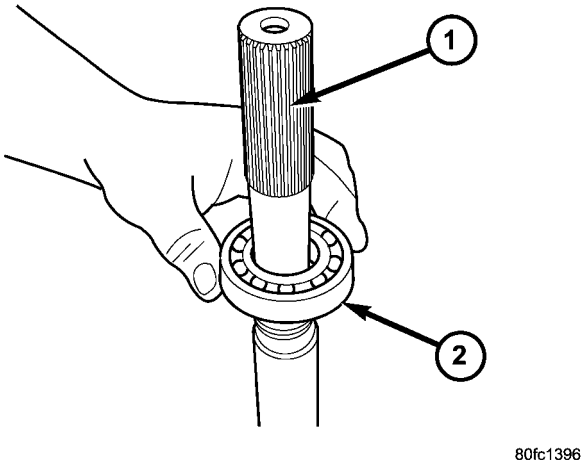

Fig. 136 Install Extension Shaft Bearing

1 - EXTENSION SHAFT
2 - BEARING

(b) Install the extension shaft bearing retaining ring (3) (Fig. 137) onto the extension shaft (1).

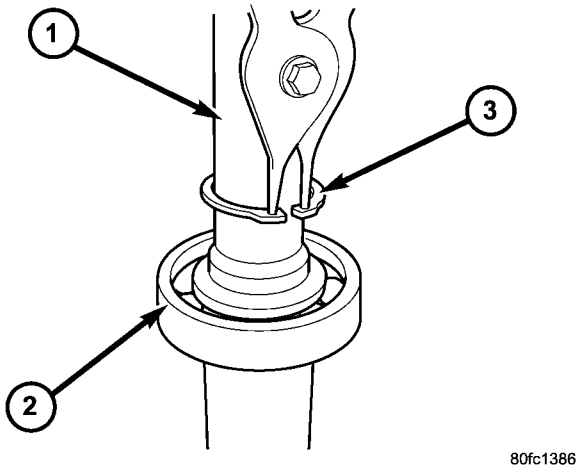

Fig. 137 Install Extension Shaft Bearing Retaining Ring

1 - EXTENSION SHAFT
2 - BEARING
3 - RETAINING RING

(c) Install the extension shaft (2) and bearing assembly (3) (Fig. 138) into the extension housing (1).

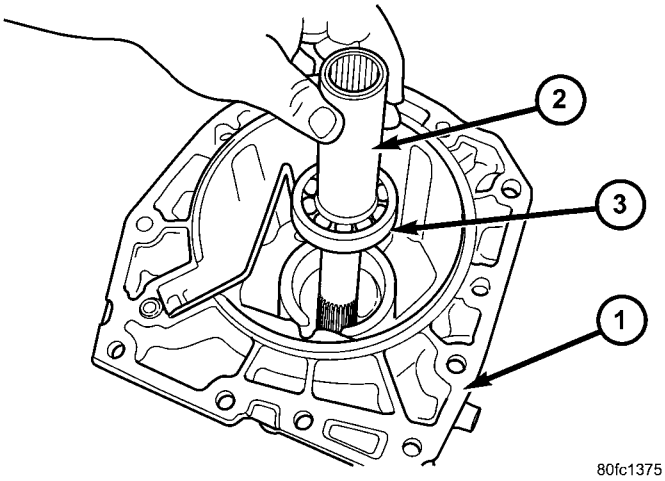

Fig. 138 Install Extension Shaft and Bearing Assembly

1 - EXTENSION HOUSING
2 - EXTENSION SHAFT
3 - BEARING

(d) Install the extension shaft bearing snap ring (3) (Fig. 139) into the extension housing.

(e) Verify that the extension shaft snap ring (3) (Fig. 140) is fully engaged in the snap ring groove.

(64) Inspect the lube tube grommet (2) (Fig. 141) for damage. If the grommet lip is damaged, it will need to be replaced.

AUTOMATIC TRANSMISSION - 42RLE (Continued)

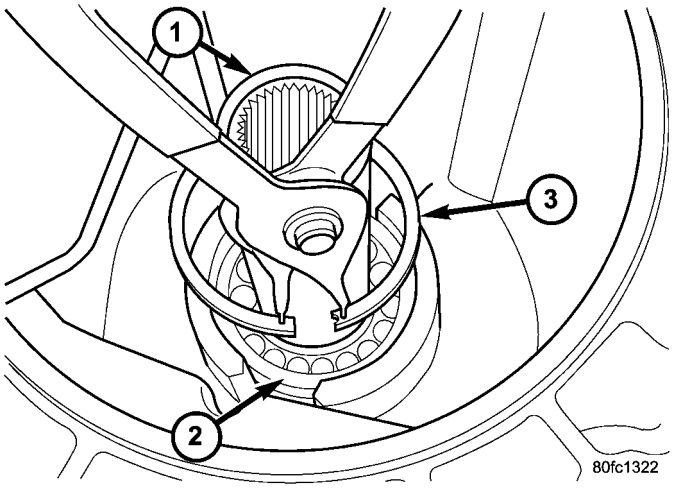

Fig. 139 Install Extension Shaft Bearing Snap Ring

1 - EXTENSION SHAFT
2 - BEARING
3 - SNAP RING

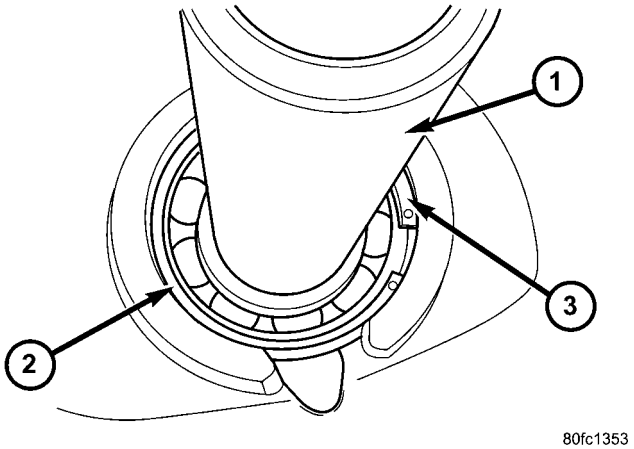

Fig. 140 Extension Shaft Bearing Snap Ring Installed

1 - EXTENSION SHAFT
2 - BEARING
3 - SNAP RING

(65) Install the 4X4 stub shaft onto the transmission output shaft.

(66) Place a bead of Mopar® ATF RTV on the rear surface of the transmission case for the adapter/extension housing.

(67) Install the adapter (Fig. 142) housing (2) onto the transmission case, 4X4 vehicles only.

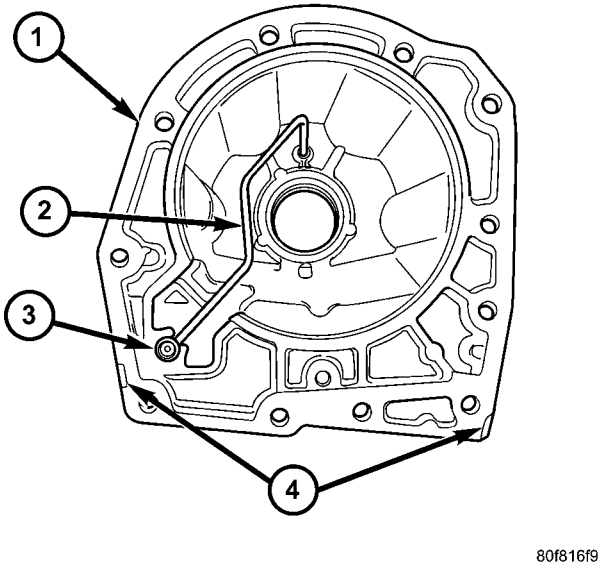

Fig. 141 Lube Tube Grommet

1 - HOUSING
2 - LUBE TUBE
3 - GROMMET
4 - PRY SLOTS

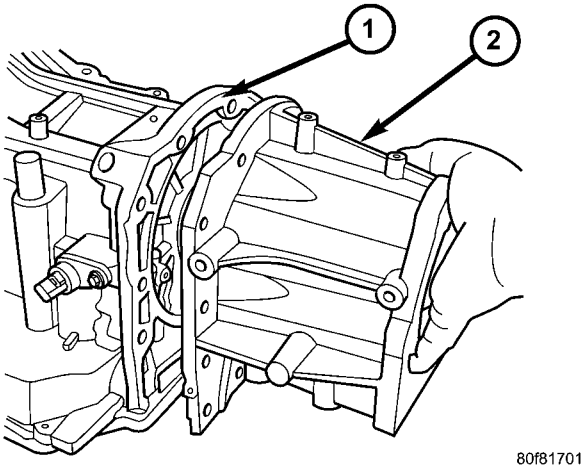

Fig. 142 Install Adapter Housing

1 - TRANSMISSION CASE
2 - ADAPTER HOUSING

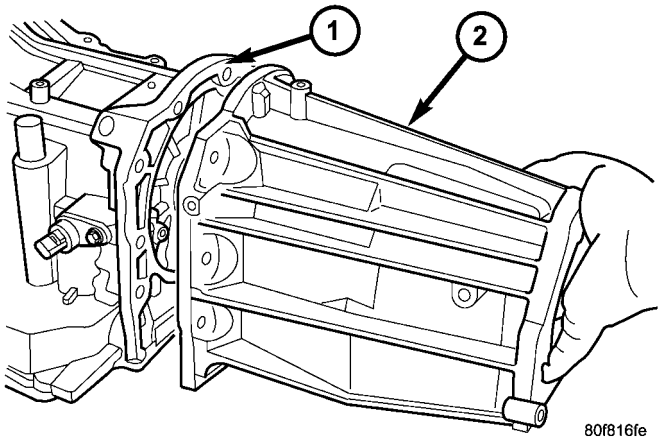

Fig. 143 Install Extension Housing

1 - TRANSMISSION CASE
2 - EXTENSION HOUSING

(68) Install the extension (Fig. 143) housing (2) onto the transmission case, 4X2 vehicles only.

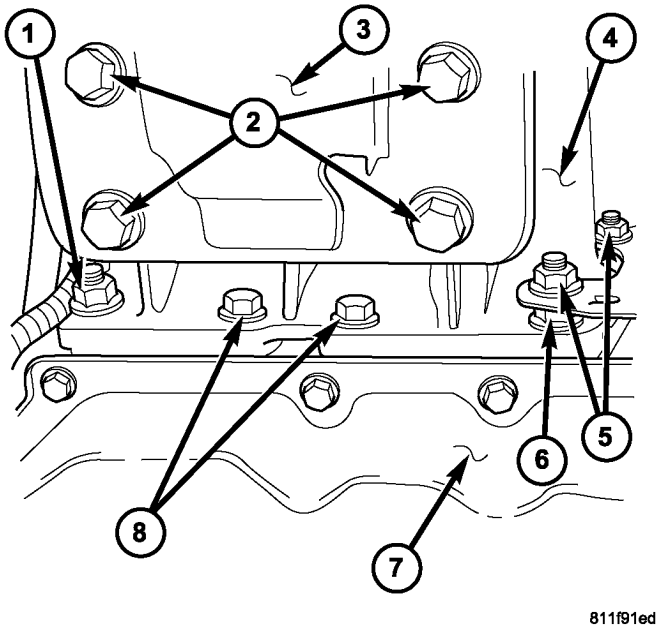

Fig. 144 Adapter Housing Fasteners

1 - STUD, ADAPTER/EXTENSION
2 - TRANSMISSION MOUNT FASTENERS (4)
3 - TRANSMISSION MOUNT
4 - TRANSMISSION CASE
5 - NUT, EXHAUST HANGER BRACKET (2)
6 - STUD, ADAPTER/EXTENSION
7 - TRANSMISSION OIL PAN
8 - BOLT, ADAPTER/EXTENSION (2)

NOTE: Before installing the lowermost four adapter/extension housing bolts (Fig. 144), it will be necessary to replentish the sealing patch on the bolts using Mopar® Lock & Seal Adhesive.

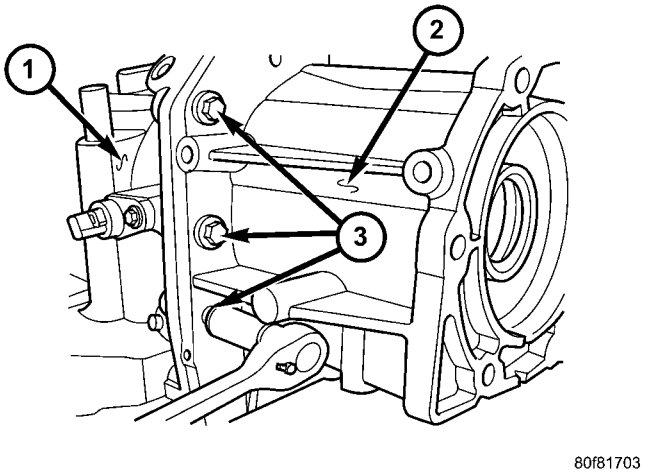

Fig. 145 Install Adapter Housing Bolts

1 - TRANSMISSION CASE
2 - ADAPTER HOUSING
3 - BOLTS

(69) Install the bolts (Fig. 145) that hold the adapter or extension housing onto the transmission case. Be sure to install any stud bolts to their original locations. Tighten the bolts to 54 N·m (40 ft.lbs.).

INSTALLATION

(1) Check torque converter hub and hub drive flats for sharp edges burrs, scratches, or nicks. Polish the hub and flats with 320/400 grit paper and crocus cloth if necessary. Verify that the converter hub o-ring is properly installed and is free of any debris. The hub must be smooth to avoid damaging pump seal at installation.

(2) If a replacement transmission is being installed, transfer any components necessary, such as the manual shift lever and shift cable bracket, from the original transmission onto the replacement transmission.

(3) Lubricate oil pump seal lip with transmission fluid.

(4) Align converter and oil pump.

(5) Carefully insert converter in oil pump. Then rotate converter back and forth until fully seated in pump gears.

(6) Check converter seating with steel scale and straightedge (Fig. 146). Surface of converter lugs should be at least 13mm (1/2 in.) to rear of straightedge when converter is fully seated.

(7) Temporarily secure converter with C-clamp.

(8) Position transmission on jack and secure it with chains.

(9) Check condition of converter driveplate. Replace the plate if cracked, distorted or damaged. **Also be sure transmission dowel pins are seated in engine block and protrude far enough to hold transmission in alignment.**

AUTOMATIC TRANSMISSION - 42RLE (Continued)

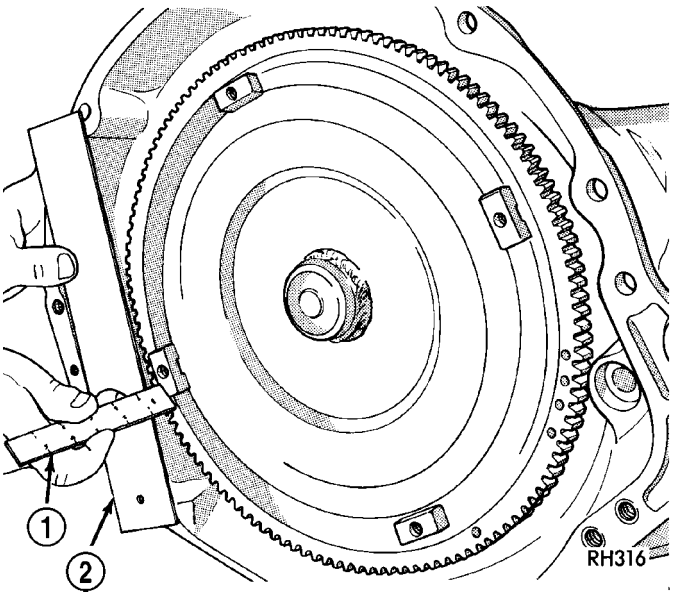

Fig. 146 Checking Converter Seating - Typical

1 - SCALE
2 - STRAIGHTEDGE

(10) Apply a light coating of Mopar® High Temp Grease to the torque converter hub pocket in the rear pocket of the engine's crankshaft.

(11) Raise transmission and align the torque converter with the drive plate and transmission converter housing with the engine block.

(12) Move transmission forward. Then raise, lower or tilt transmission to align the converter housing with engine block dowels.

(13) Carefully work transmission forward and over engine block dowels until converter hub is seated in crankshaft. Verify that no wires, or the transmission vent hose, have become trapped between the engine block and the transmission.

(14) Install two bolts to attach the transmission to the engine.

(15) Install remaining torque converter housing to engine bolts. Tighten to 68 N·m (50 ft.lbs.).

(16) Install transfer case, if equipped. Tighten transfer case nuts to 35 N·m (26 ft.lbs.).

(17) Install rear transmission crossmember. Tighten crossmember to frame bolts to 68 N·m (50 ft.lbs.).

(18) Install rear support to transmission. Tighten bolts to 47 N·m (35 ft.lbs.).

(19) Lower transmission onto crossmember and install bolts attaching transmission mount to crossmember. Tighten clevis bracket to crossmember bolts to 47 N·m (35 ft.lbs.). Tighten the clevis bracket to rear support bolt to 68 N·m (50 ft.lbs.).

(20) Remove engine support fixture.

(21) Connect gearshift cable to support bracket and transmission manual lever.

(22) Connect input and output speed sensor wires (Fig. 147).

(23) Connect wires to the transmission range sensor (Fig. 147) and the solenoid/pressure switch assembly (Fig. 148).

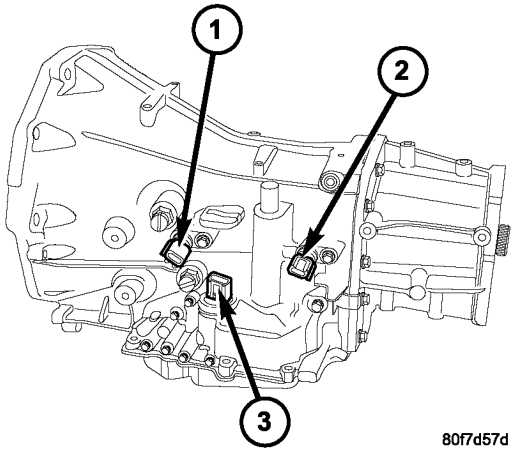

Fig. 147 Input and Output Speed Sensors and Transmission Range Sensor

1 - INPUT SPEED SENSOR
2 - OUTPUT SPEED SENSOR
3 - TRANSMISSION RANGE SENSOR

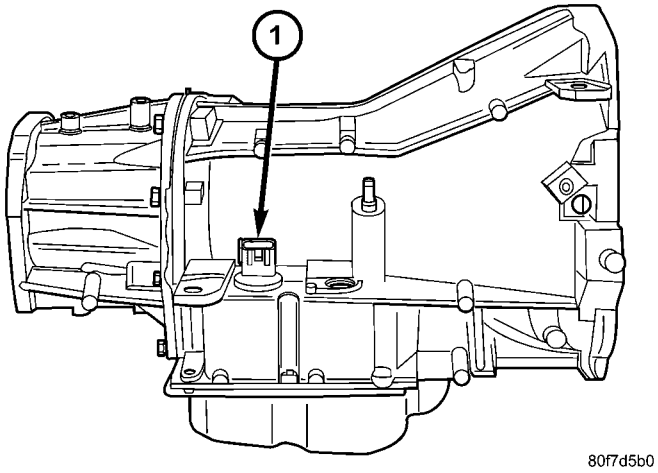

Fig. 148 Solenoid/Pressure Switch Assembly

1 - SOLENOID/PRESSURE SWITCH ASSEMBLY CONNECTOR

CAUTION: It is essential that correct length bolts be used to attach the converter to the driveplate. Bolts that are too long will damage the clutch surface inside the converter.

AUTOMATIC TRANSMISSION - 42RLE (Continued)

(24) Install torque converter-to-driveplate bolts. Tighten bolts to 88 N·m (65 in. lbs.).
(25) Install starter motor and cooler line bracket.
(26) Connect cooler lines to transmission.
(27) Install transmission fill tube.
(28) Install exhaust components (Fig. 149).

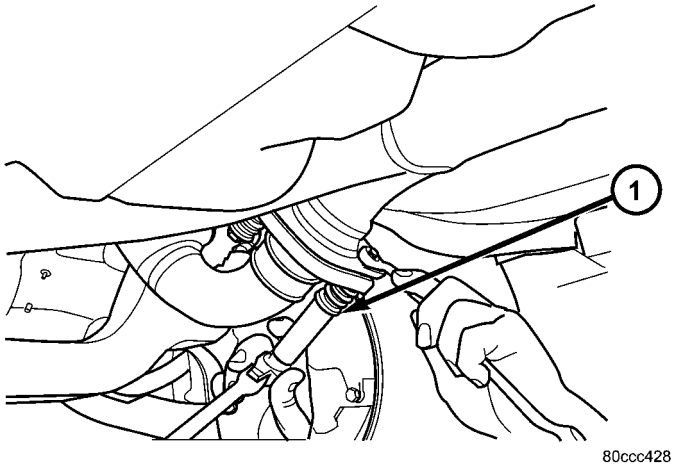

Fig. 149 Install Exhaust Flange Bolts

1 - EXHAUST FLANGE BOLTS

(29) Align and connect propeller shaft(s).
(30) Adjust gearshift cable if necessary.
(31) Install any skid plates removed previously (Fig. 150). (Refer to 13 - FRAMES & BUMPERS/FRAME/TRANSFER CASE SKID PLATE - INSTALLATION)

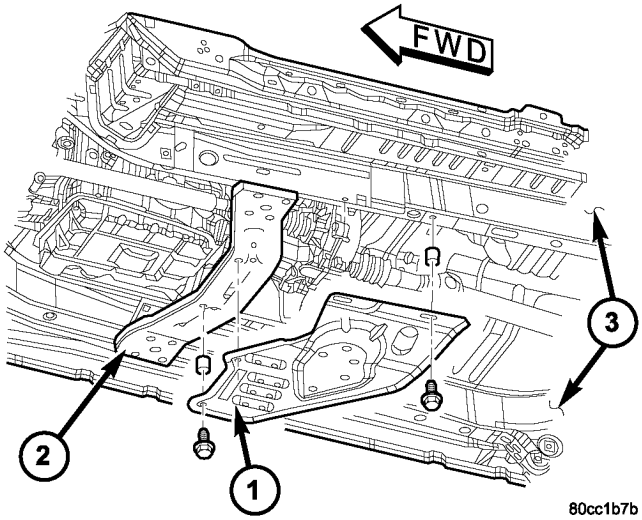

Fig. 150 Install Skid Plate

1 - SKID PLATE
2 - TRANSMISSION CROSSMEMBER
3 - FRAME RAILS

(32) Lower vehicle.
(33) Fill transmission with Mopar® ATF +4, Automatic Transmission Fluid.

AUTOMATIC TRANSMISSION - 42RLE (Continued)

SCHEMATICS AND DIAGRAMS - 42RLE TRANSMISSION

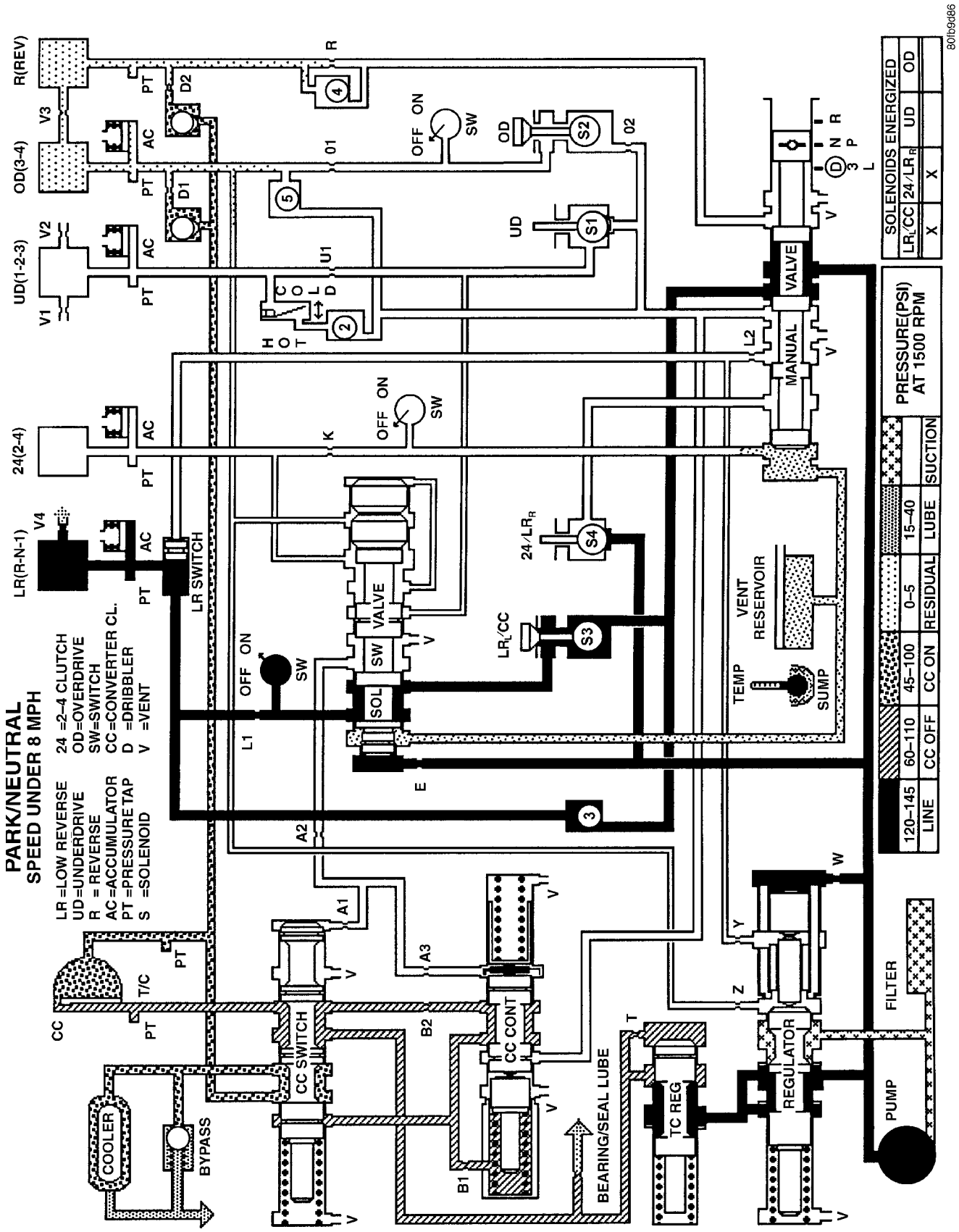

Park/Neutral (Speed Under 8 mph)

AUTOMATIC TRANSMISSION - 42RLE (Continued)

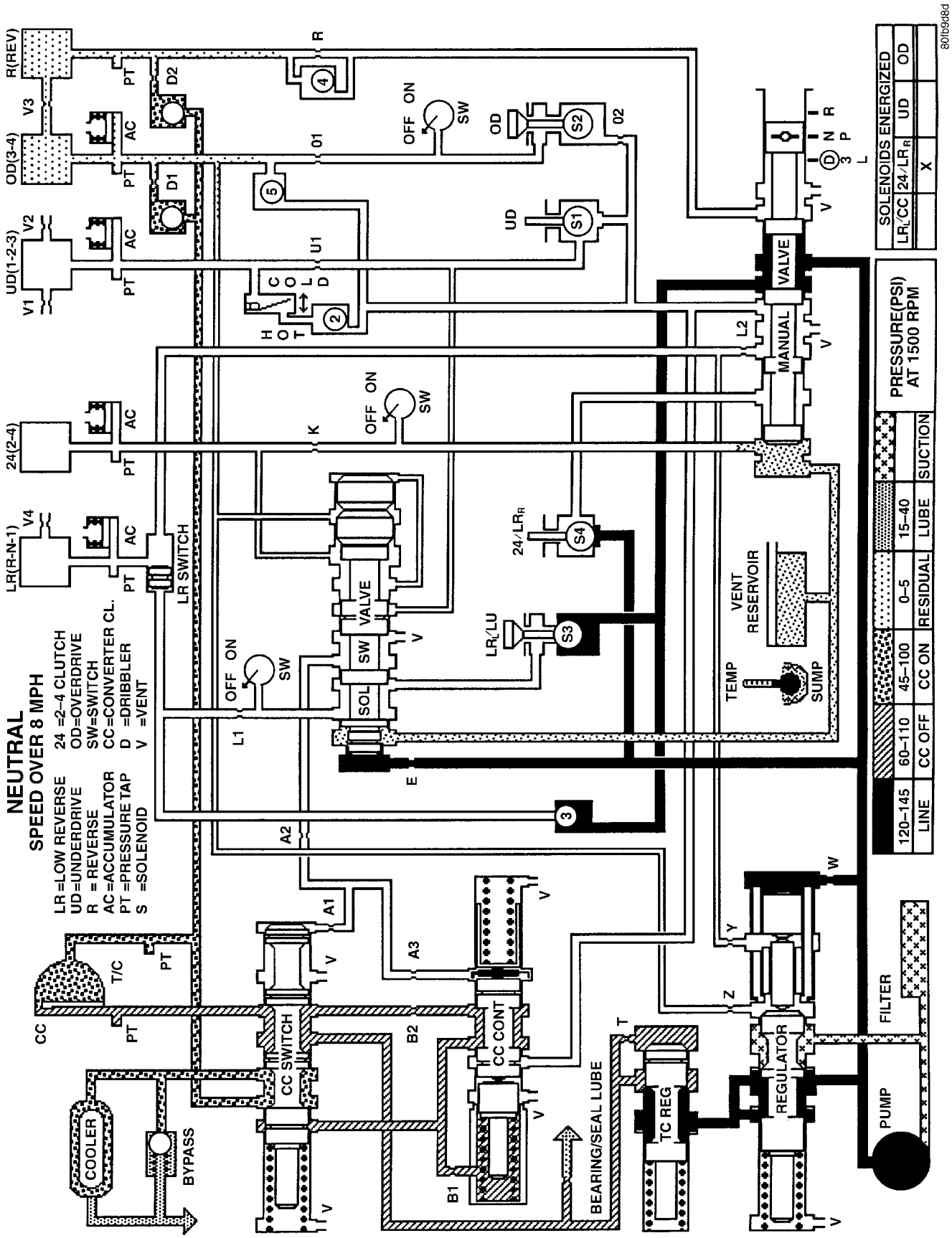

Neutral (Speed Over 8 mph)

AUTOMATIC TRANSMISSION - 42RLE (Continued)

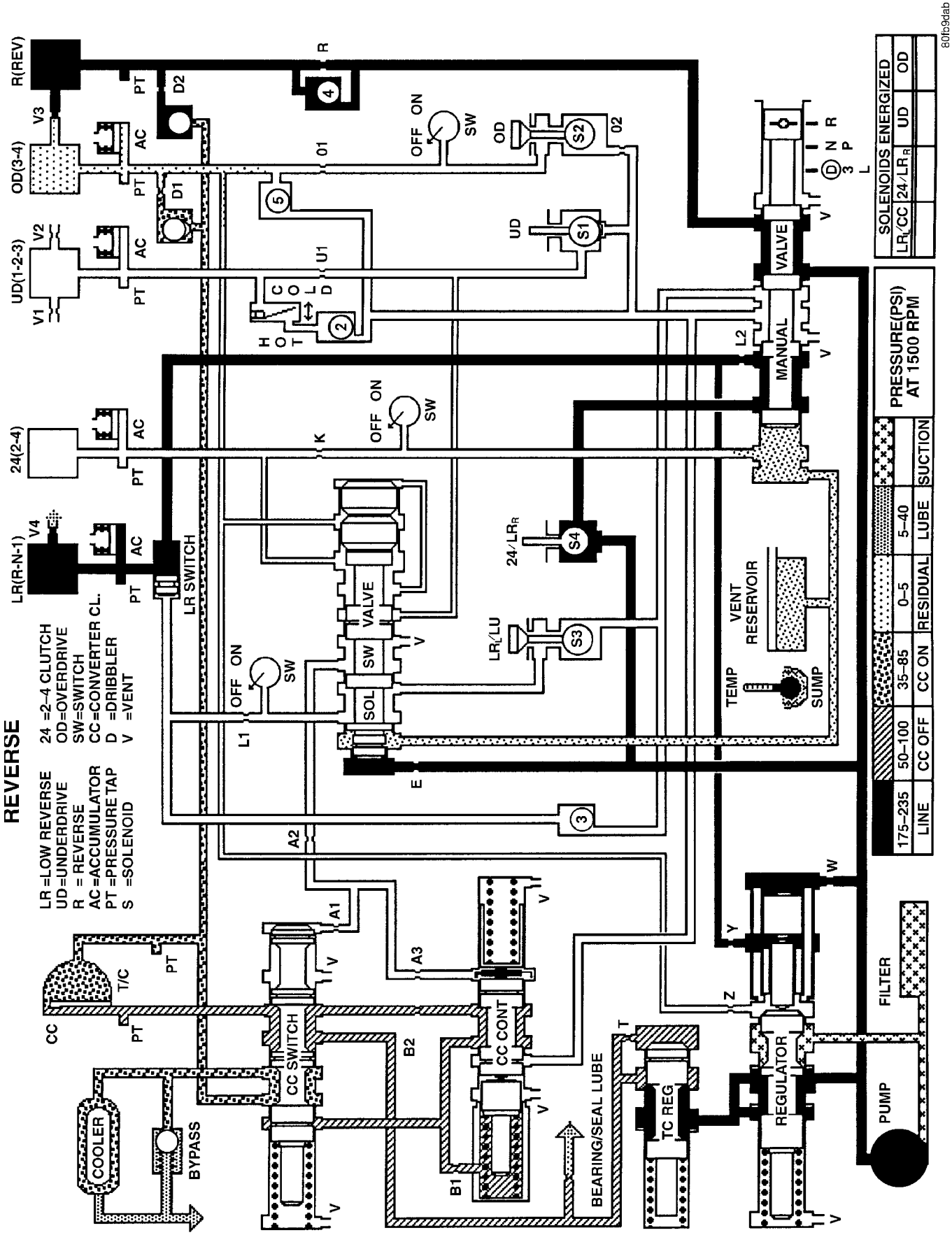

Reverse

AUTOMATIC TRANSMISSION - 42RLE (Continued)

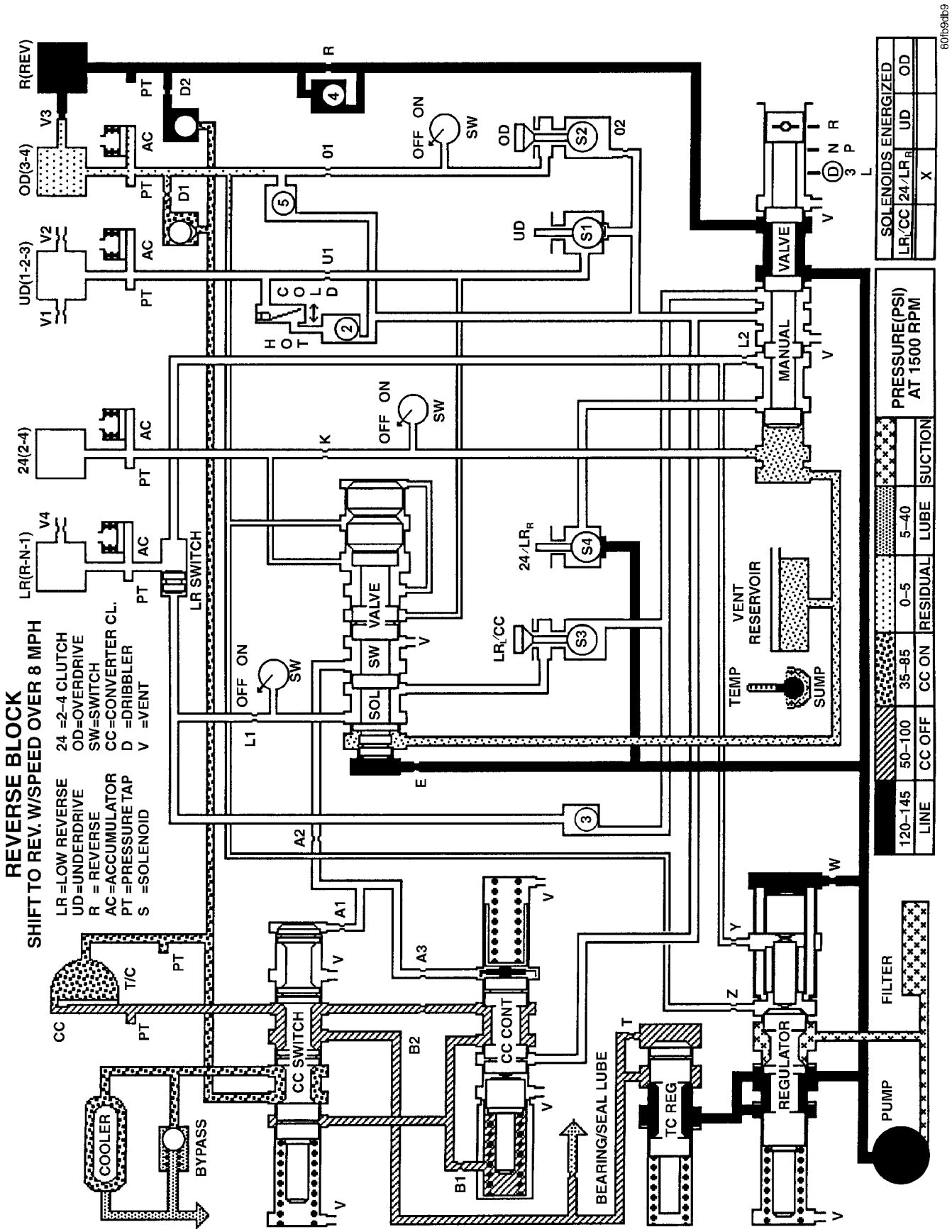

Reverse Block (Shift to Reverse w/Speed Over 8 mph)

AUTOMATIC TRANSMISSION - 42RLE (Continued)

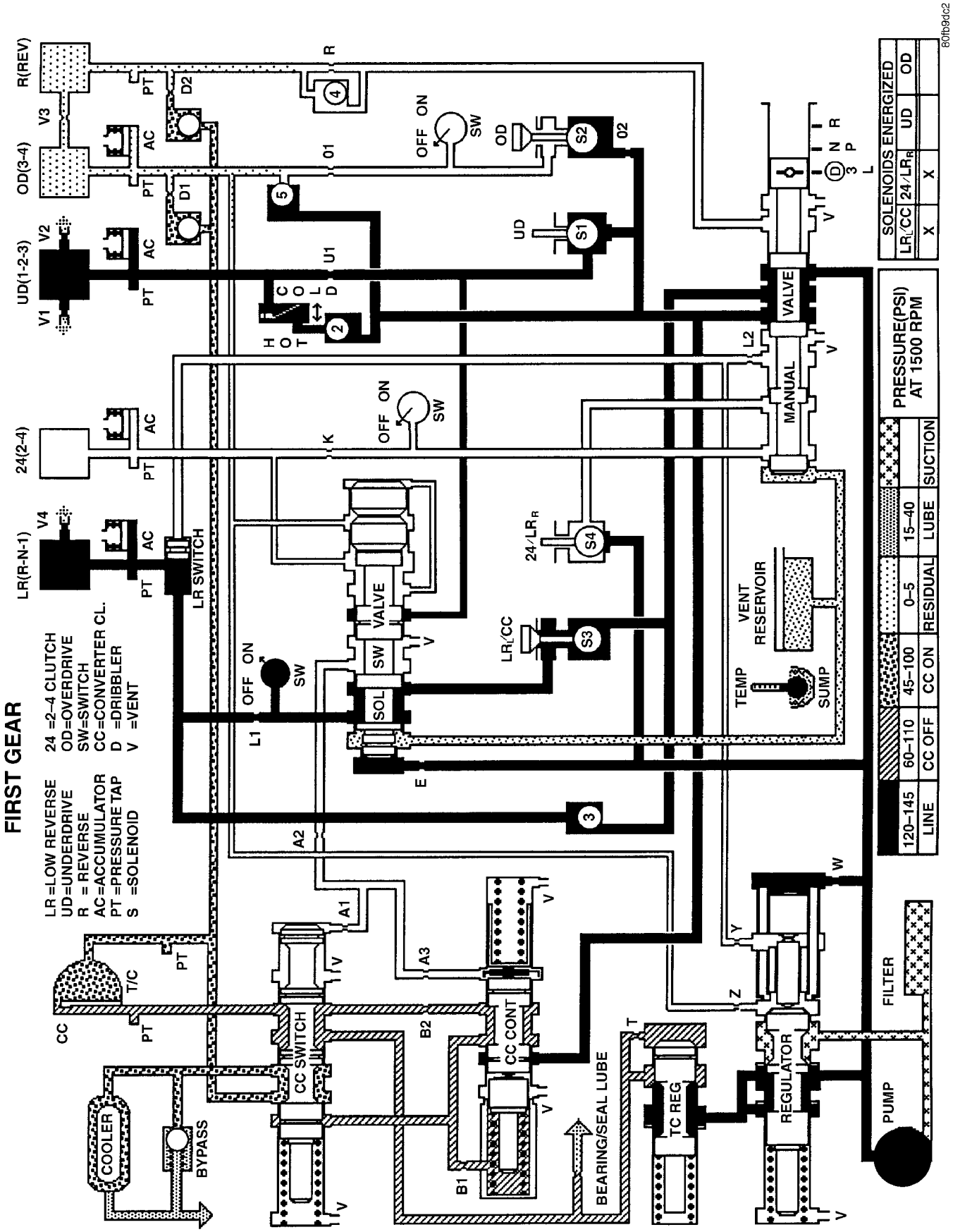

AUTOMATIC TRANSMISSION - 42RLE (Continued)

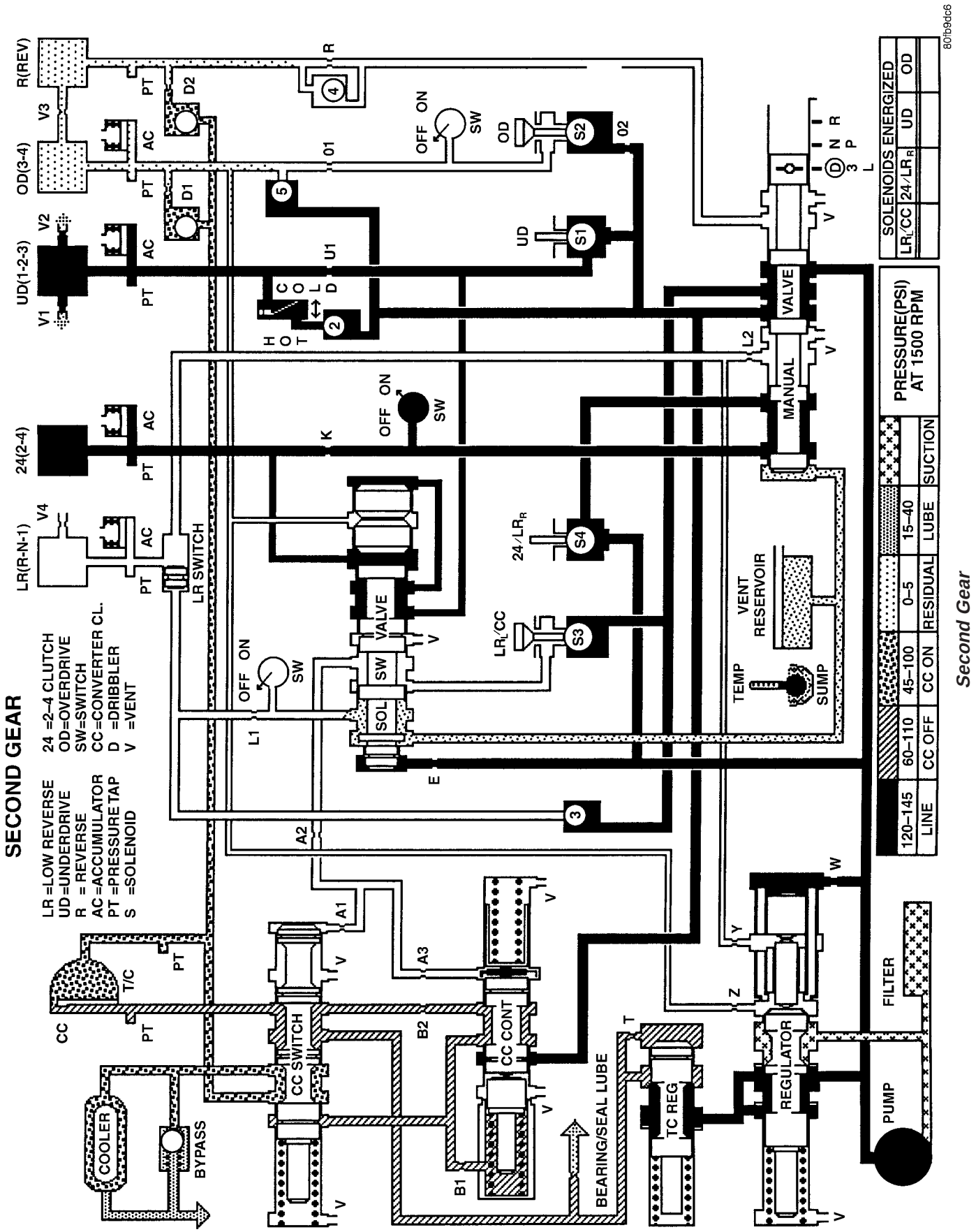

AUTOMATIC TRANSMISSION - 42RLE (Continued)

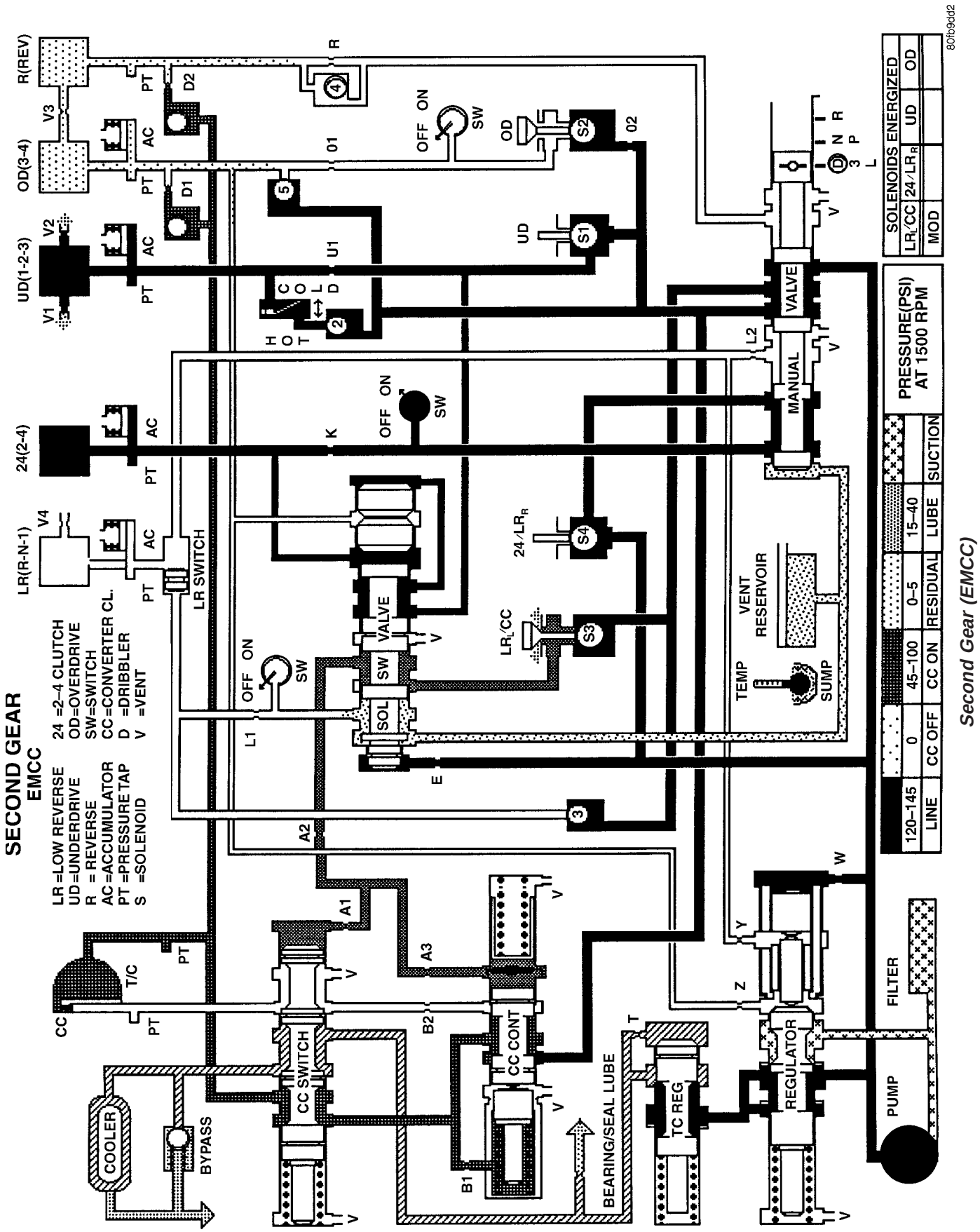

AUTOMATIC TRANSMISSION - 42RLE (Continued)

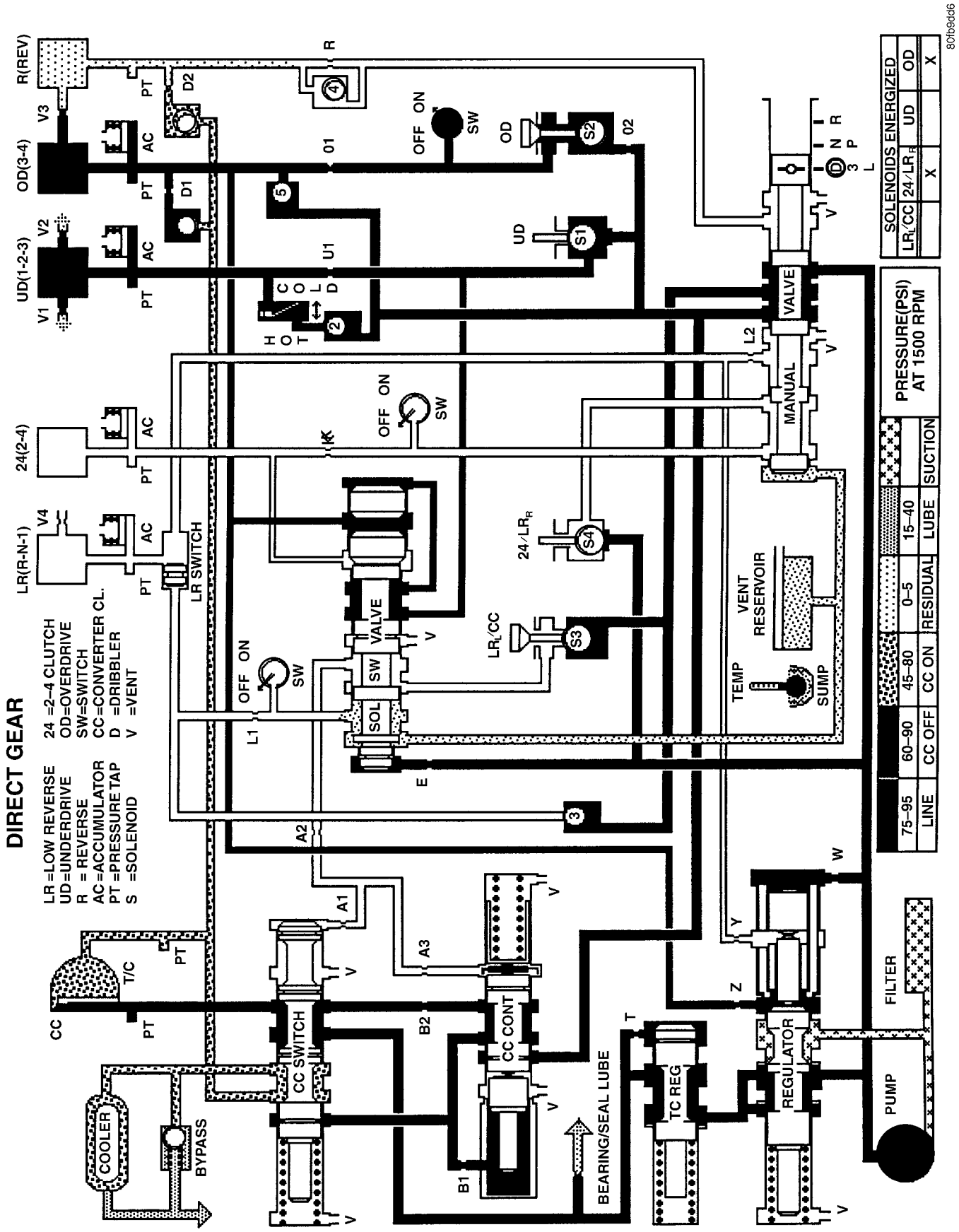

Direct Gear

AUTOMATIC TRANSMISSION - 42RLE (Continued)

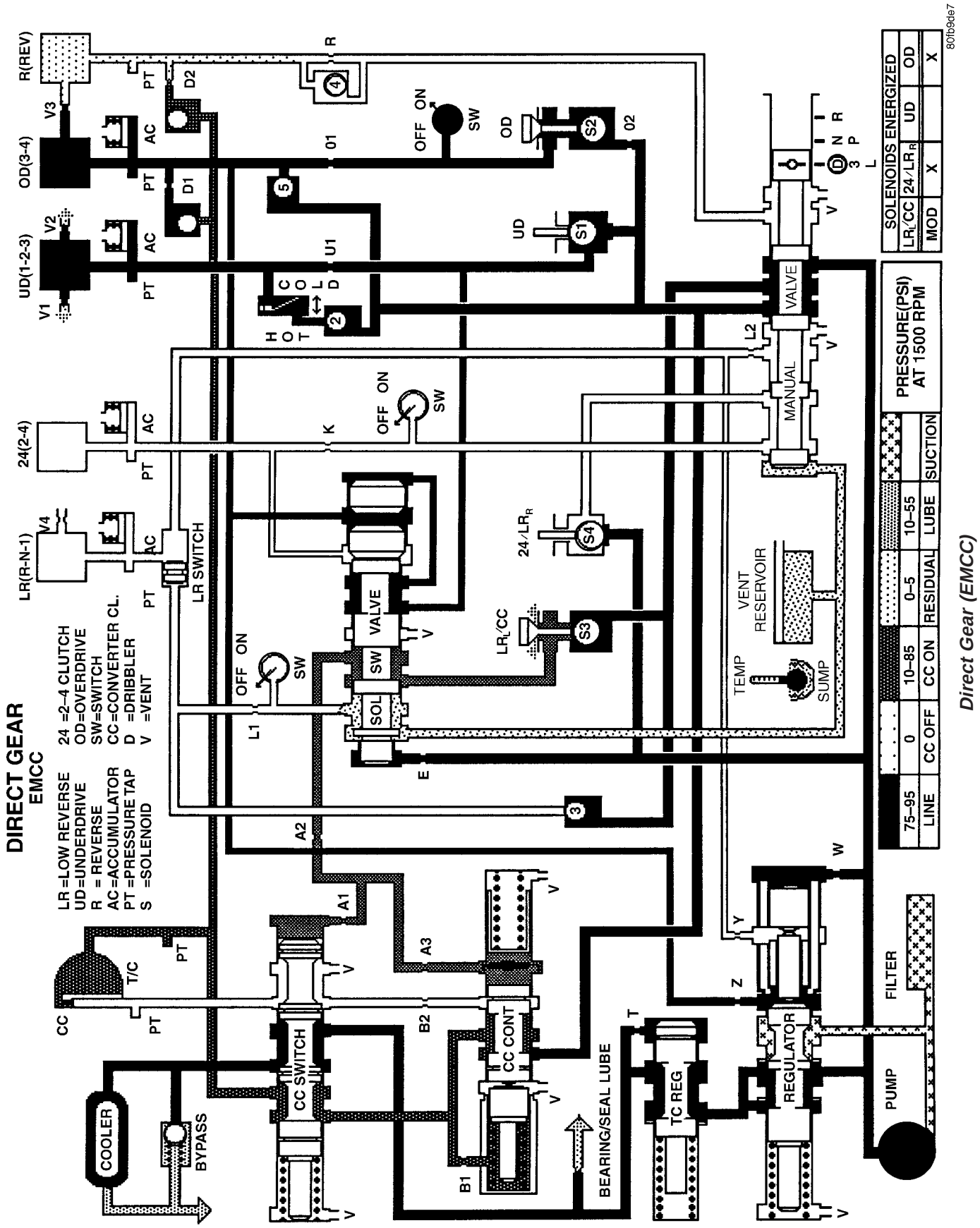

Direct Gear (EMCC)

AUTOMATIC TRANSMISSION - 42RLE (Continued)

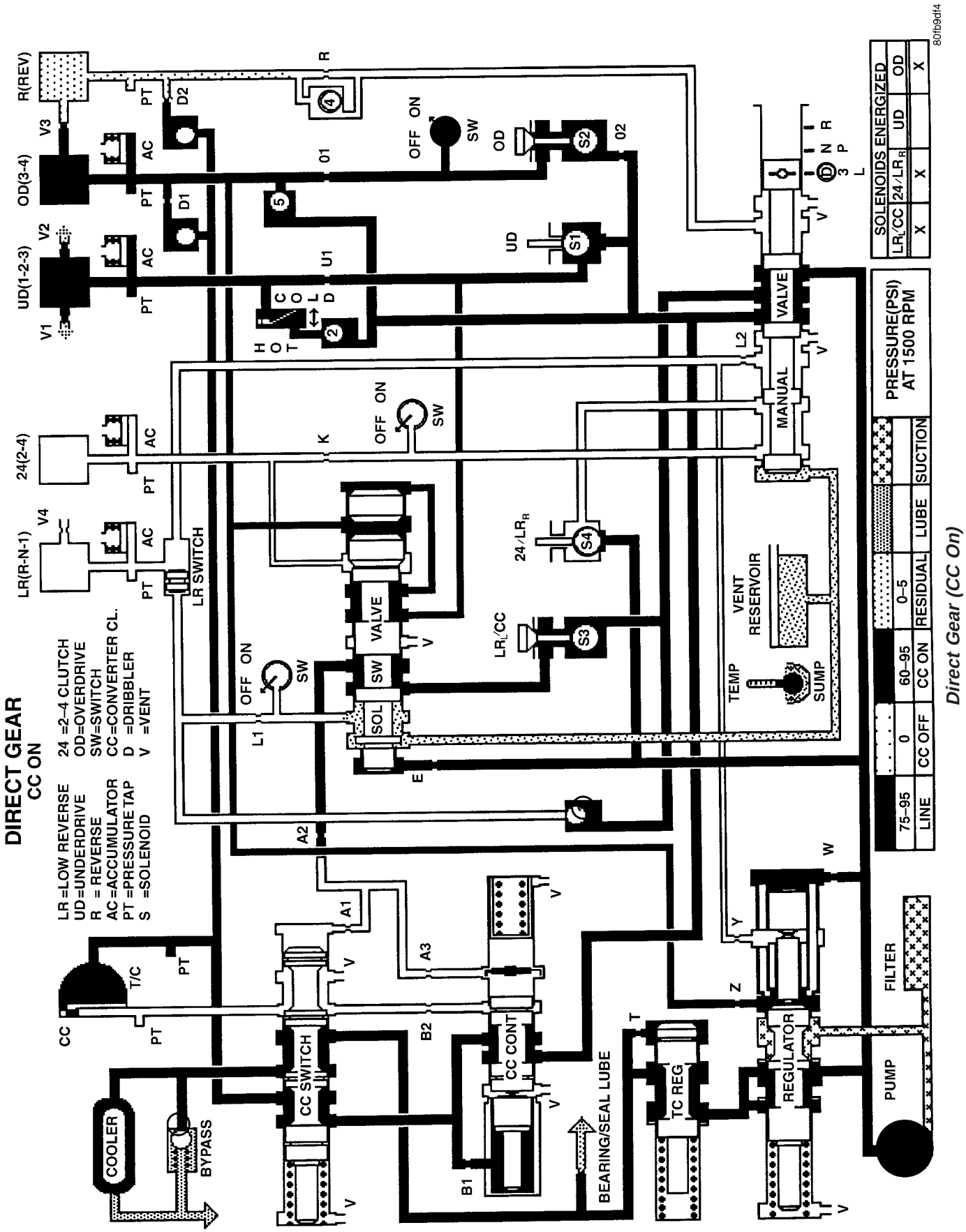

Direct Gear (CC On)

AUTOMATIC TRANSMISSION - 42RLE (Continued)

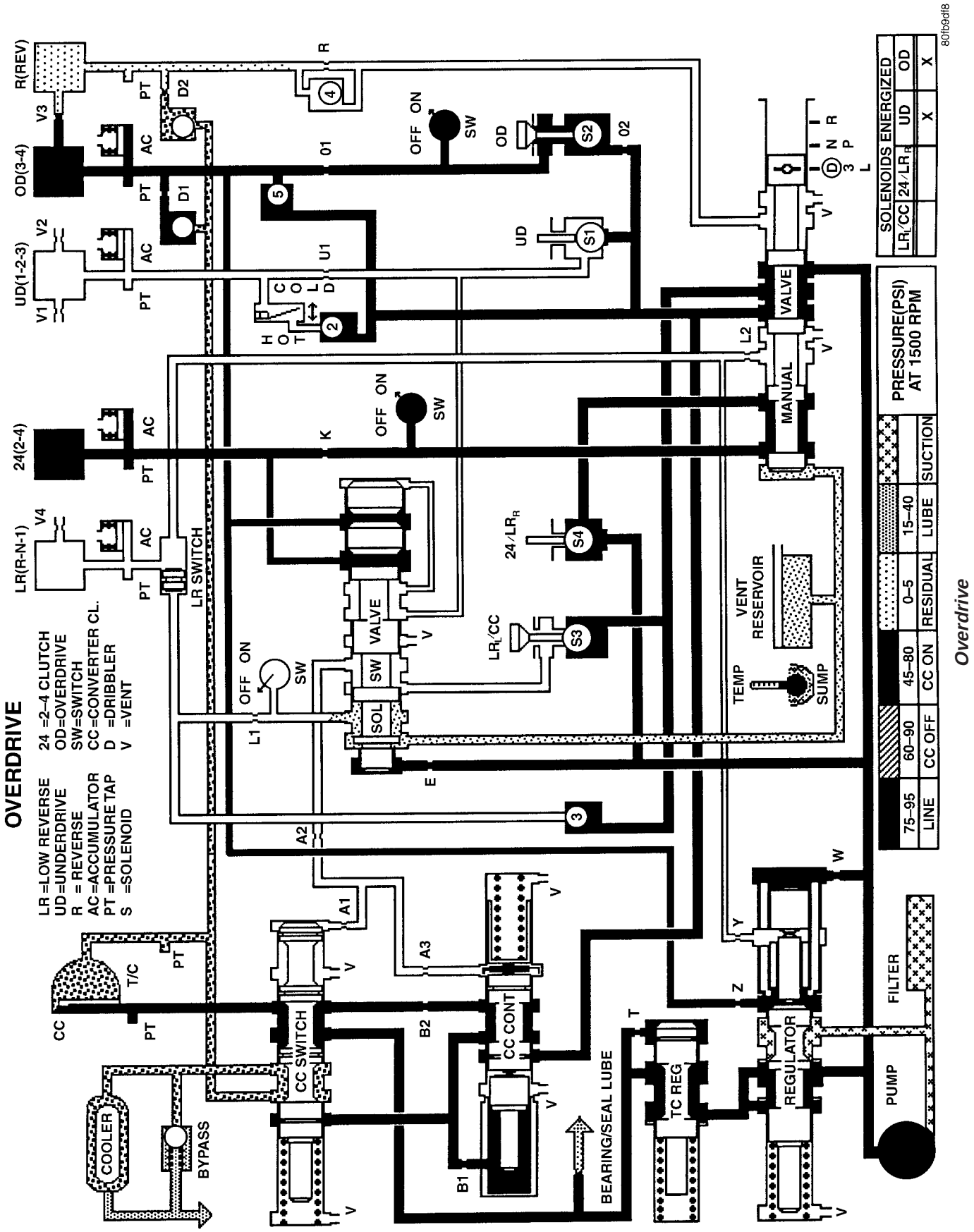

AUTOMATIC TRANSMISSION - 42RLE (Continued)

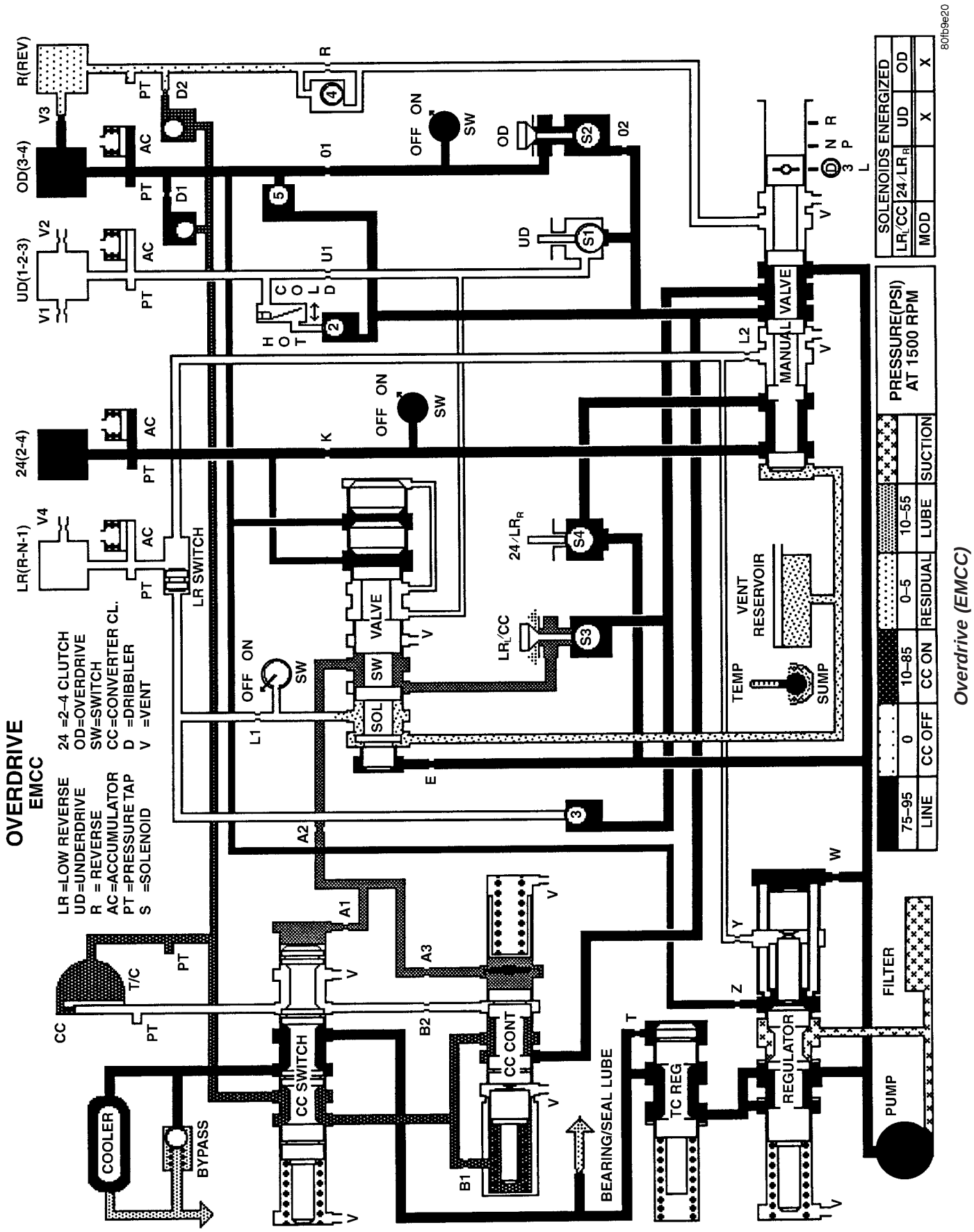

Overdrive (EMCC)

AUTOMATIC TRANSMISSION - 42RLE (Continued)

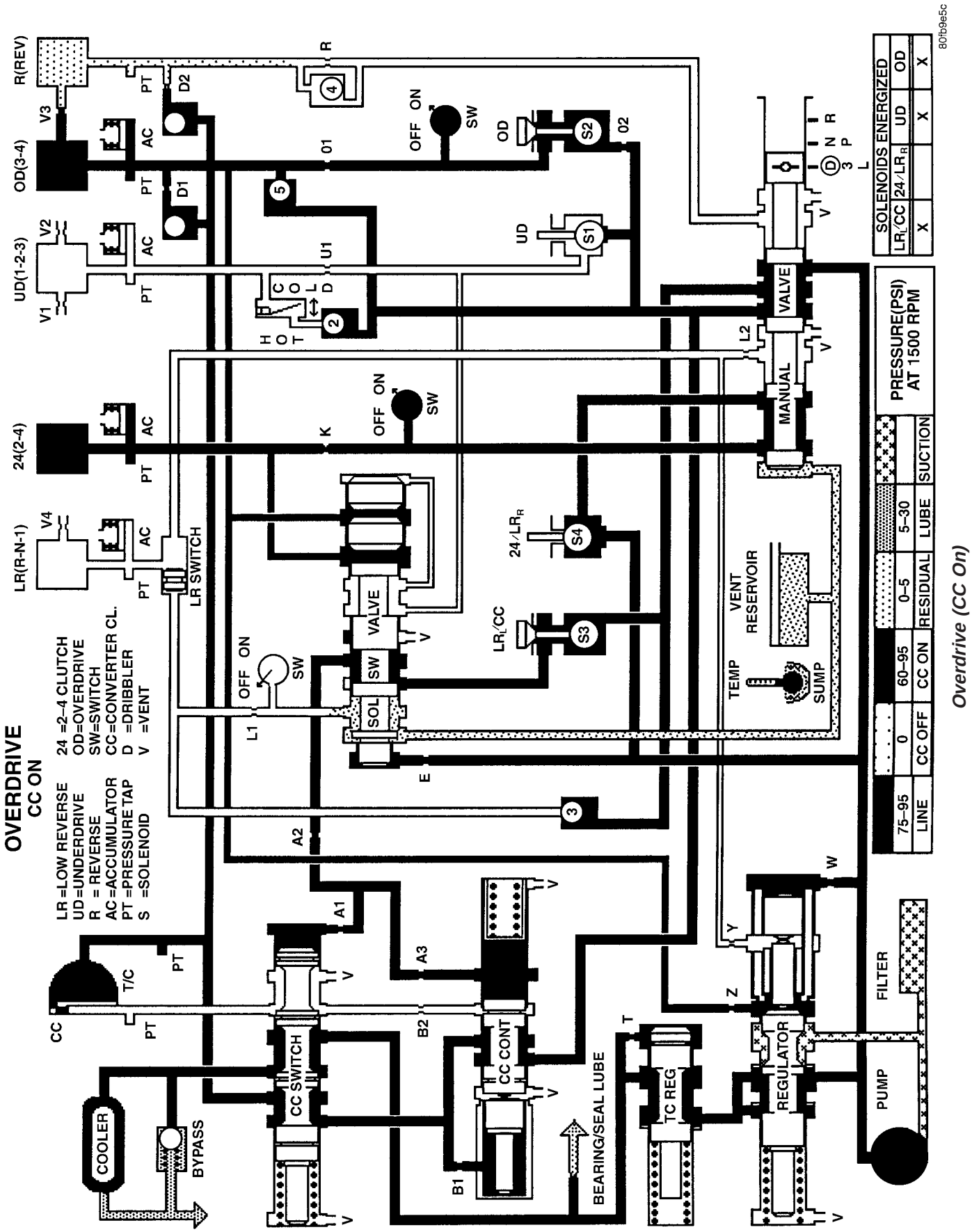

AUTOMATIC TRANSMISSION - 42RLE (Continued)

SPECIFICATIONS

42RLE AUTOMATIC TRANSMISSION

GENERAL SPECIFICATIONS

Transmission Type	Four-Speed Automatic, Electronically Controlled, Fully Adaptive, Electronically Modulated Torque Converter
Lubrication Method	Pump (internal - external gear-type)
Cooling Method	Water Heat Exchanger and/or Air-to-Oil Heat Exchanger

GEAR RATIOS

1st Gear	2.84:1
2nd Gear	1.57:1
3rd Gear (Direct)	1.00:1
4th Gear (Overdrive)	0.69:1
Reverse Gear	2.21:1

BEARING PRELOAD (DRAG TORQUE)

Description	Metric	Standard
Output Shaft	0.22-0.903 N·m	1-8 in. lbs.

CLUTCH PACK

Description	Metric	Standard
Low/Reverse Clutch (Select Reaction Plate)	0.84-1.60 mm	0.033-0.063 in.
Two/Four Clutch (No Select)	0.76-2.64 mm	0.030-0.104 in.
Reverse Clutch (Select Snap Ring)	0.89-1.37 mm	0.035-0.054 in.
Overdrive Clutch (No Select)	1.07-3.25 mm	0.042-0.128 in.
Underdrive Clutch (Select Reaction Plate)	0.94-1.50 mm	0.037-0.059 in.

INPUT SHAFT

Description	Metric	Standard
End Play	0.127-0.635 mm	0.005-0.025 in.

OIL PUMP CLEARANCES

DESCRIPTION	METRIC	STANDARD
Outer Gear-to-Crescent	0.060-0.298 mm	0.0023-0.0117 in.
Inner Gear-to-Crescent	0.093-0.385 mm	0.0036-0.0151 in.
Outer Gear-to-Pocket	0.089-0.202 mm	0.0035-0.0079 in.

AUTOMATIC TRANSMISSION - 42RLE (Continued)

DESCRIPTION	METRIC	STANDARD
Outer Gear Side Clearance	0.020-0.046 mm	0.0008-0.0018 in.
Inner Gear Side Clearance	0.020-0.046 mm	0.0008-0.0018 in.

TORQUE SPECIFICATIONS

Description	N·m	Ft. Lbs.	In. Lbs.
Bolt, Torque Converter Housing to Engine	68	50	-
Bolt, Converter-to-Driveplate	88	65	-
Bolt, Fluid Filter-to-Valve Body	5	-	45
Bolt, L/R Clutch Retainer-to-Case	5	-	45
Bolt, Adapter/Extension Housing	54	40	-
Bolt, Manual Valve Lever-to-Manual Valve	5	-	45
Bolt, Oil Pan-to-Case	20	14.5	-
Bolt, Oil Pump-to-Case	30	-	265
Bolt, Park Sprag Retainer	4.5	-	40
Bolt, Reaction Shaft Support Halves	28	-	250
Bolt, Solenoid/Pressure Switch Assy-to-Valve Body	5.5	-	50
Bolt, Valve Body-to-Case	12	-	105
Bolt, Valve Body-to-Transfer Plate	5	-	45
Fitting, Cooler Line	47.5	35	-
Nut, Output Shaft	271	200	-
Plug, Pressure Tap	5	-	45
Bolt, Input Speed-to-Case Sensor	9	-	80
Bolt, Output Speed-to-Case Sensor	9	-	80

SPECIAL TOOLS

42RLE AUTOMATIC TRANSMISSION

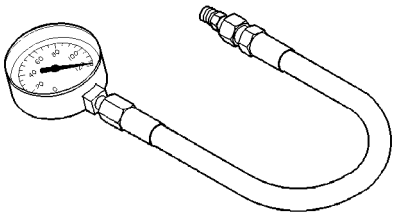

Pressure Gauge (High) C-3293SP

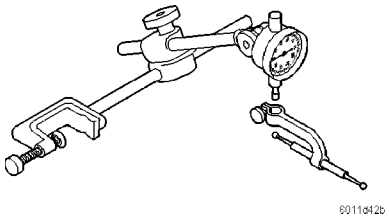

Dial Indicator C-3339

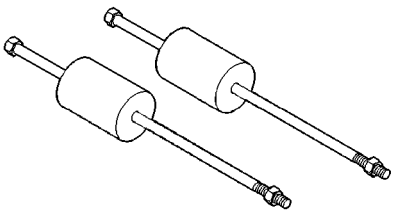

Hammer, Slide - C-3752

AUTOMATIC TRANSMISSION - 42RLE (Continued)

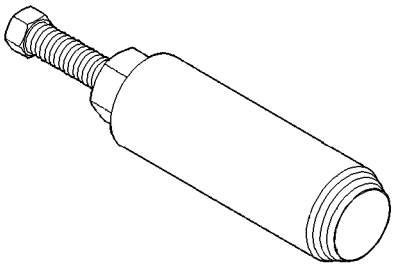

Puller, Seal - C-3981B

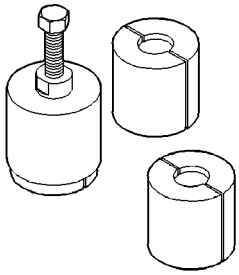

Puller Set 5048

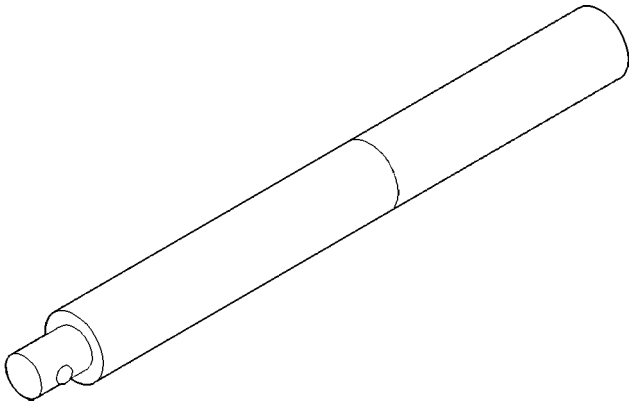

Universal Handle C-4171

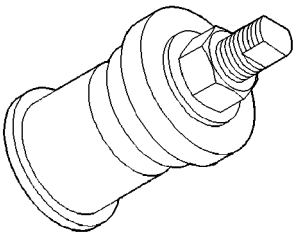

Installer - 5050A

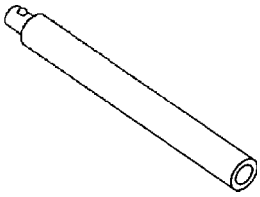

Extension, Handle - C-4171-2

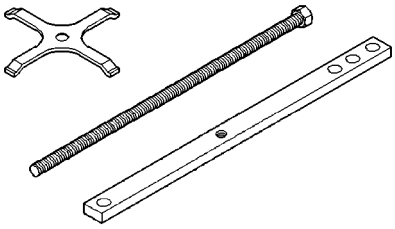

Compressor - 5058A

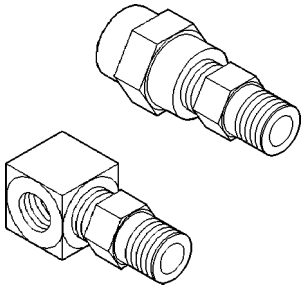

Adapter Set - L-4559

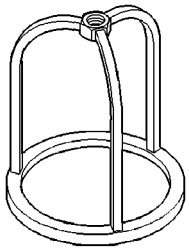

Compressor - 5059-A

AUTOMATIC TRANSMISSION - 42RLE (Continued)

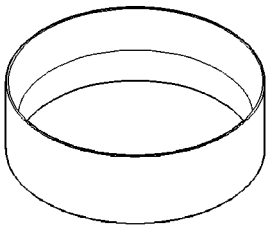

Installer - 5067

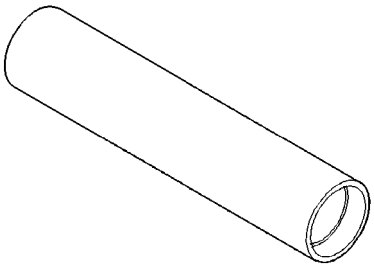

Installer 6052

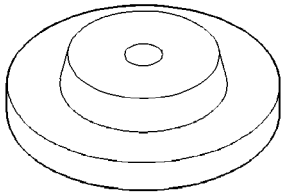

Disk - 6057

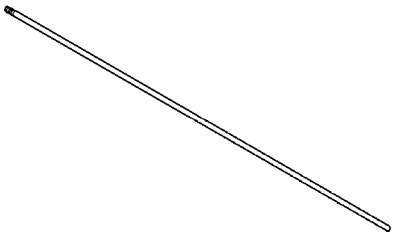

Tip - 6268

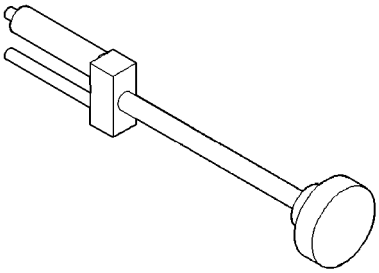

Remover/Installer - 6301

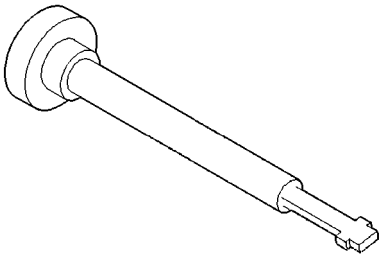

Remover/Installer - 6302

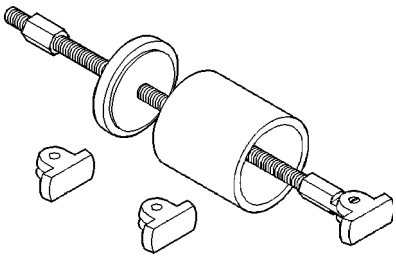

Remover 6310

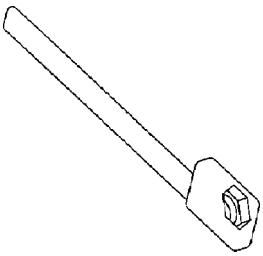

Wrench - 6497

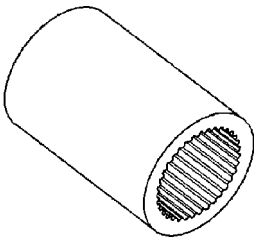

Wrench - 6498-A

AUTOMATIC TRANSMISSION - 42RLE (Continued)

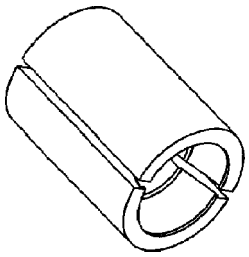

Puller Jaws - 6545

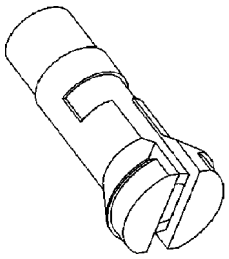

Remover - 6596

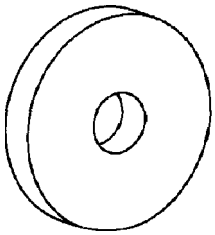

Remover - 6597

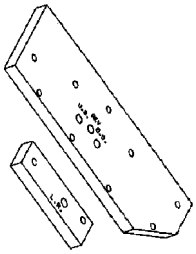

Plate Set - 6599

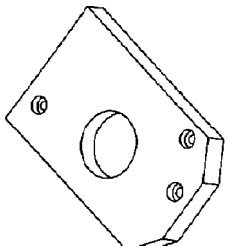

Plate, Support - 6618A

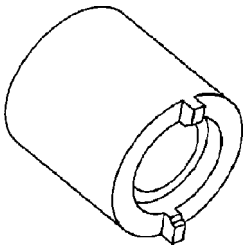

Tool, Staking - 6639

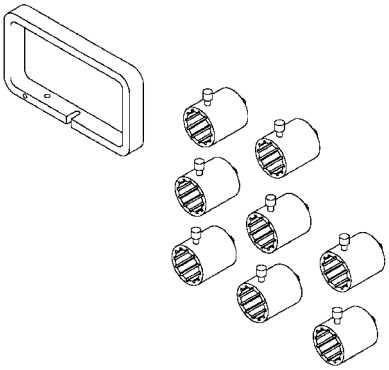

End Play Set - 8266

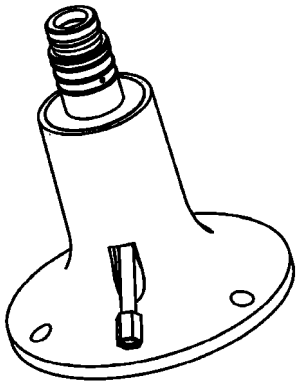

Fixture, Pressure - 8391

ACCUMULATOR

DESCRIPTION

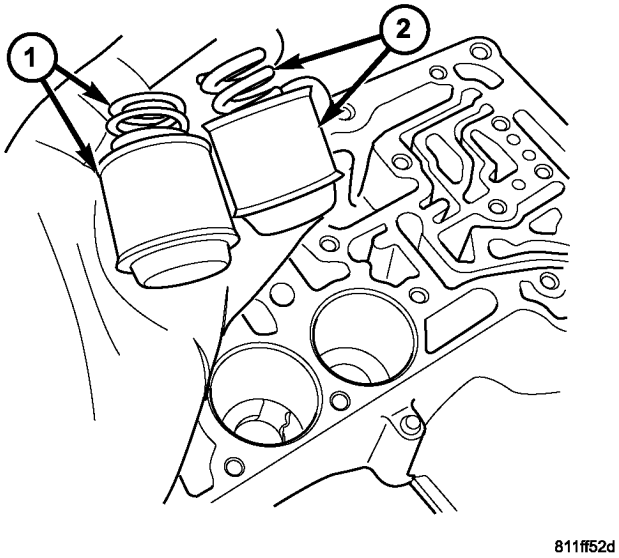

Fig. 151 Underdrive and Overdrive Accumulators

1 - OVERDRIVE PISTON AND SPRING
2 - UNDERDRIVE PISTON AND SPRING

The 42RLE underdrive, overdrive, low/reverse, and 2/4 clutch hydraulic circuits each contain an accumulator. An accumulator typically consists of a piston, return spring(s), and a cover or plug. The overdrive (1) and underdrive (2) accumulators are located within the transmission case, and are retained by the valve body (Fig. 151).

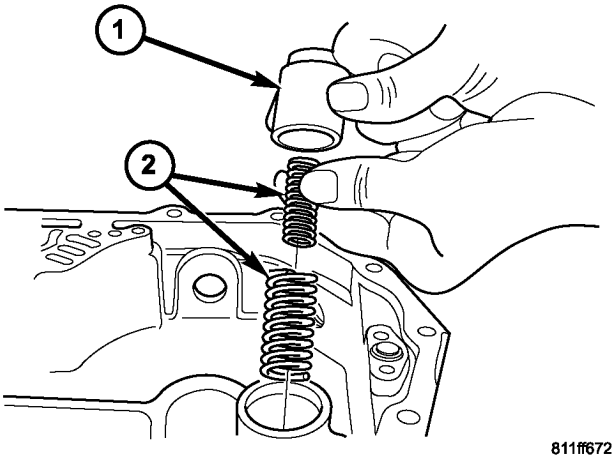

Fig. 152 Low/Reverse Accumulator

1 - PISTON
2 - RETURN SPRINGS

The low reverse (1) accumulator (Fig. 152) is also located within the transmission case, but the assembly is retained by a cover and a snap-ring.

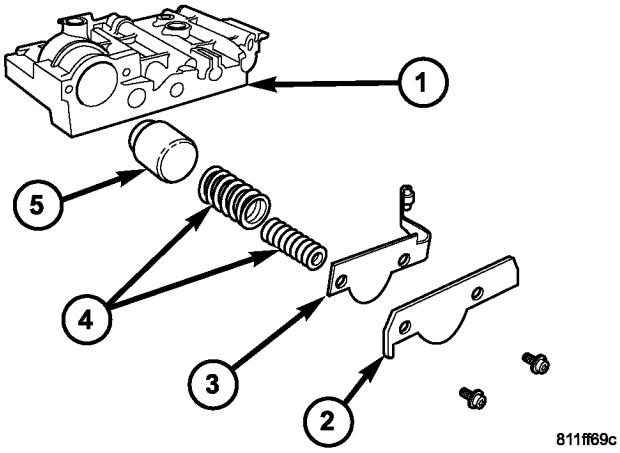

Fig. 153 2/4 Accumulator Assembly

1 - VALVE BODY
2 - RETAINER PLATE
3 - DETENT SPRING
4 - RETURN SPRINGS
5 - PISTON

The 2/4 accumulator (5) is located in the valve body. It is retained by a cover and retaining screws (Fig. 153).

OPERATION

The function of an accumulator is to cushion the application of a frictional clutch element. When pressurized fluid is applied to a clutch circuit, the application force is dampened by fluid collecting in the respective accumulator chamber against the piston and springs. The intended result is a smooth, firm clutch application.

ADAPTER HOUSING SEAL

REMOVAL

(1) Remove the transfer case (Refer to 21 - TRANSMISSION/TRANSFER CASE - REMOVAL).

(2) Using a screw mounted in a slide hammer, remove the adapter housing seal.

INSTALLATION

(1) Install a new adapter housing seal with Tool Handle C-4171 and Installer C-3860-A.

(2) Install the transfer case (Refer to 21 - TRANSMISSION/TRANSFER CASE - INSTALLATION).

BEARINGS

ADJUSTMENTS

BEARING ADJUSTMENT PROCEDURES

Take extreme care when removing and installing bearing cups and cones. **Use only an arbor press for installation,** as a hammer may not properly align the bearing cup or cone. Burrs or nicks on the bearing seat will give a false end play reading, while gauging for proper shims. Improperly seated bearing cup and cones are subject to low-mileage failure.

Bearing cups and cones should be replaced if they show signs of pitting or heat distress.

If distress is seen on either the cup or bearing rollers, both cup and cone must be replaced.

NOTE: Bearing drag torque specifications must be maintained to avoid premature bearing failures.

Used (original) bearing may lose up to 50 percent of the original drag torque after break-in.

NOTE: All bearing adjustments must be made with no other component interference or gear intermesh.

Oil all bearings before checking turning torque.

BRAKE TRANSMISSION SHIFT INTERLOCK MECHANISM

DESCRIPTION

The Brake Transmission Shift Interlock Sytem (BTSI), consists of a Park-Interlock cable and a solenoid mounted in the shift lever assembly. The Park-Interlock cable connects the automatic transmission floor mounted shifter to the steering column ignition switch.

OPERATION

The system locks the shifter into the PARK position. The interlock system is engaged whenever the ignition switch is in the LOCK or ACCESSORY position. An additional electrically activated feature will prevent shifting out of the PARK position unless the brake pedal is depressed approximately one-half an inch. A magnetic holding device in the shift lever assembly is energized when the ignition is in the RUN position. When the key is in the RUN position and the brake pedal is depressed, the shifter is unlocked and will move into any position. The interlock system also prevents the ignition switch from being turned to the LOCK or ACCESSORY position, unless the shifter is fully locked into the PARK position.

DIAGNOSIS AND TESTING - BRAKE TRANSMISSION SHIFT INTERLOCK SYSTEM

(1) Verify that the key can only be removed in the PARK position

(2) When the shift lever is in PARK And the shift handle pushbutton is in the “OUT” position, the ignition key cylinder should rotate freely from OFF to LOCK. When the shifter is in any other gear or neutral position, the ignition key cylinder should not rotate to the LOCK position.

(3) Shifting out of PARK should not be possible when the ignition key cylinder is in the OFF position.

(4) Shifting out of PARK should not be possible while applying normal pushbutton force and ignition key cylinder is in the RUN or START positions unless the foot brake pedal is depressed approximately 1/2 inch (12mm).

(5) Shifting out of PARK should not be possible when the ignition key cylinder is in the ACCESSORY or LOCK positions.

(6) Shifting between any gears, NEUTRAL or into PARK may be done without depressing foot brake pedal with ignition switch in RUN or START positions.

DRIVING CLUTCHES

DESCRIPTION

Three hydraulically applied input clutches are used to drive planetary components. The underdrive (2), overdrive (3), and reverse (4) clutches are considered input/driving clutches and are contained within the input clutch assembly (Fig. 154). The input clutch assembly also contains:

- Input shaft
- Input hub
- Clutch retainer
- Underdrive piston
- Overdrive/reverse piston
- Overdrive hub
- Underdrive hub

OPERATION

The three input clutches are responsible for driving different components of the planetary geartrain.

NOTE: (Refer to 21 - TRANSMISSION/AUTOMATIC - 42RLE - DIAGNOSIS AND TESTING) for a collective view of which clutch elements are applied at each position of the selector lever.

DRIVING CLUTCHES (Continued)

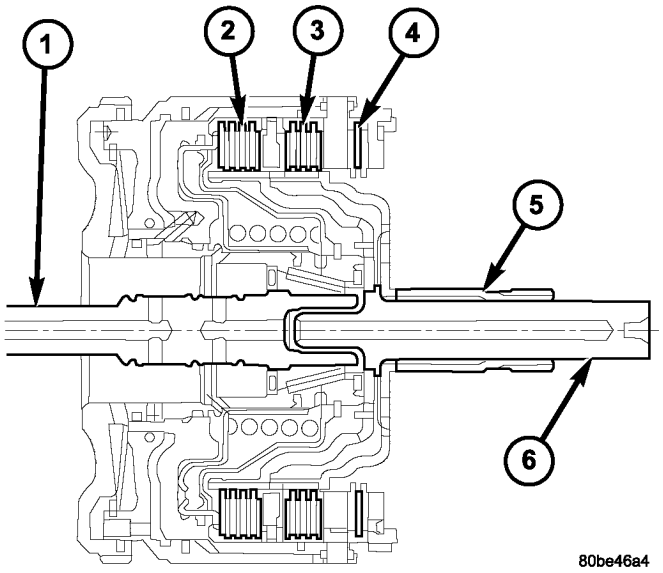

Fig. 154 Input Clutch Assembly

1 - INPUT SHAFT
2 - UNDERDRIVE CLUTCH
3 - OVERDRIVE CLUTCH
4 - REVERSE CLUTCH
5 - OVERDRIVE SHAFT
6 - UNDERDRIVE SHAFT

UNDERDRIVE CLUTCH

The underdrive clutch is hydraulically applied in first, second, and third (direct) gears by pressurized fluid against the underdrive piston. When the underdrive clutch is applied, the underdrive hub drives the rear sun gear.

OVERDRIVE CLUTCH

The overdrive clutch is hydraulically applied in third (direct) and overdrive gears by pressurized fluid against the overdrive/reverse piston. When the overdrive clutch is applied, the overdrive hub drives the front planet carrier.

REVERSE CLUTCH

The reverse clutch is hydraulically applied in reverse gear only by pressurized fluid against the overdrive/reverse piston. When the reverse clutch is applied, the front sun gear assembly is driven.

EXTENSION HOUSING SEAL

REMOVAL

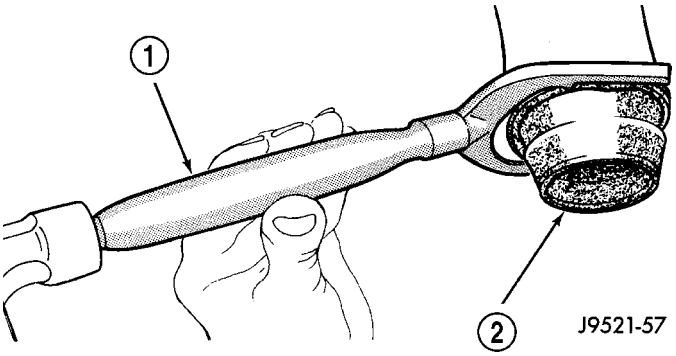

Fig. 155 Removing Transmission Housing Yoke Seal

1 - SPECIAL TOOL C-3985-B
2 - SEAL

(1) Raise vehicle.

(2) Mark propeller shaft and axle yoke, or companion flange, for alignment reference.

(3) Disconnect and remove propeller shaft.

(4) Remove old seal with Seal Remover C-3985-B (1) (Fig. 155) from overdrive extension housing.

INSTALLATION

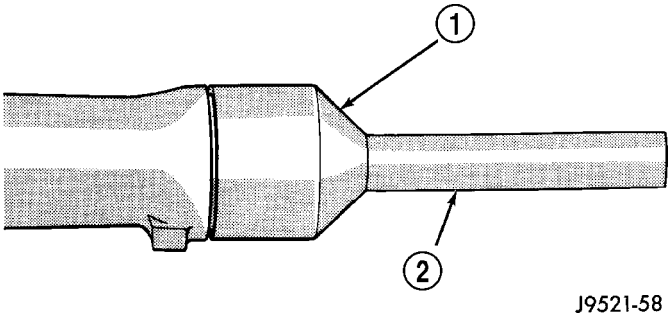

Fig. 156 Installing Transmission Housing Seal

1 - SPECIAL TOOL C-3995-A OR C-3972-A
2 - SPECIAL TOOL C-4471

(1) Place seal in position on overdrive housing.

(2) Drive seal into overdrive housing with Seal Installer C-3995-A (1) (Fig. 156).

(3) Carefully guide propeller shaft slip yoke into housing and onto output shaft splines. Align marks made at removal and connect propeller shaft to rear axle pinion yoke.

FLUID AND FILTER

DIAGNOSIS AND TESTING

DIAGNOSIS AND TESTING - CAUSES OF BURNT FLUID

Burnt, discolored fluid is a result of overheating which has two primary causes.

(1) A result of restricted fluid flow through the main and/or auxiliary cooler. This condition is usually the result of a damaged main cooler, or severe restrictions in the coolers and lines caused by debris or kinked lines.

(2) Heavy duty operation with a vehicle not properly equipped for this type of operation. Trailer towing or similar high load operation will overheat the transmission fluid if the vehicle is improperly equipped. Such vehicles should have an auxiliary transmission fluid cooler, a heavy duty cooling system, and the engine/axle ratio combination needed to handle heavy loads.

EFFECTS OF INCORRECT FLUID LEVEL

A low fluid level allows the pump to take in air along with the fluid. Air in the fluid will cause fluid pressures to be low and develop slower than normal. If the transmission is overfilled, the gears churn the fluid into foam. This aerates the fluid and causing the same conditions occurring with a low level. In either case, air bubbles cause fluid overheating, oxidation, and varnish buildup which interferes with valve and clutch operation. Foaming also causes fluid expansion which can result in fluid overflow from the transmission vent or fill tube. Fluid overflow can easily be mistaken for a leak if inspection is not careful.

FLUID CONTAMINATION

Transmission fluid contamination is generally a result of:

- adding incorrect fluid
- failure to clean dipstick and fill tube when checking level
- engine coolant entering the fluid
- internal failure that generates debris
- overheat that generates sludge (fluid breakdown)
- failure to replace contaminated converter after repair

The use of non-recommended fluids can result in transmission failure. The usual results are erratic shifts, slippage, abnormal wear and eventual failure due to fluid breakdown and sludge formation. Avoid this condition by using recommended fluids only.

The dipstick cap and fill tube should be wiped clean before checking fluid level. Dirt, grease and other foreign material on the cap and tube could fall into the tube if not removed beforehand. Take the time to wipe the cap and tube clean before withdrawing the dipstick.

Engine coolant in the transmission fluid is generally caused by a cooler malfunction. The only remedy is to replace the radiator as the cooler in the radiator is not a serviceable part. If coolant has circulated through the transmission, an overhaul is necessary.

The torque converter should be replaced whenever a failure generates sludge and debris. This is necessary because normal converter flushing procedures will not remove all contaminants.

STANDARD PROCEDURE

FLUID LEVEL CHECK

The transmission sump has a dipstick to check oil similar to most automatic transmissions. It is located on the left side of the engine. Be sure to wipe all dirt from dipstick handle before removing.

The torque converter fills in both the PARK and NEUTRAL positions. Place the selector lever in PARK to be sure that the fluid level check is accurate. **The engine should be running at idle speed for at least one minute, with the vehicle on level ground.** At normal operating temperature (approximately 82 C. or 180 F.), the fluid level is correct if it is in the HOT region (cross-hatched area) on the oil level indicator. The fluid level should be in COLD region at 70° F fluid temperature. Adjust fluid level as necessary. Use only Mopar® ATF+4, Automatic Transmission Fluid.

FLUID LEVEL CHECK USING SCAN TOOL

NOTE: Engine and Transmission should be at normal operating temperature before performing this procedure.

(1) Start engine and apply parking brake.
(2) Connect scan tool and select transmission.
(3) Select sensors.
(4) Read the transmission temperature value.
(5) Compare the fluid temperature value with the chart.
(6) Adjust transmission fluid level shown on the dipstick according to the 42RLE Fluid Temperature Chart (Fig. 157). Use only Mopar® ATF+4, Automatic Transmission Fluid.
(7) Check transmission for leaks.

FLUID AND FILTER (Continued)

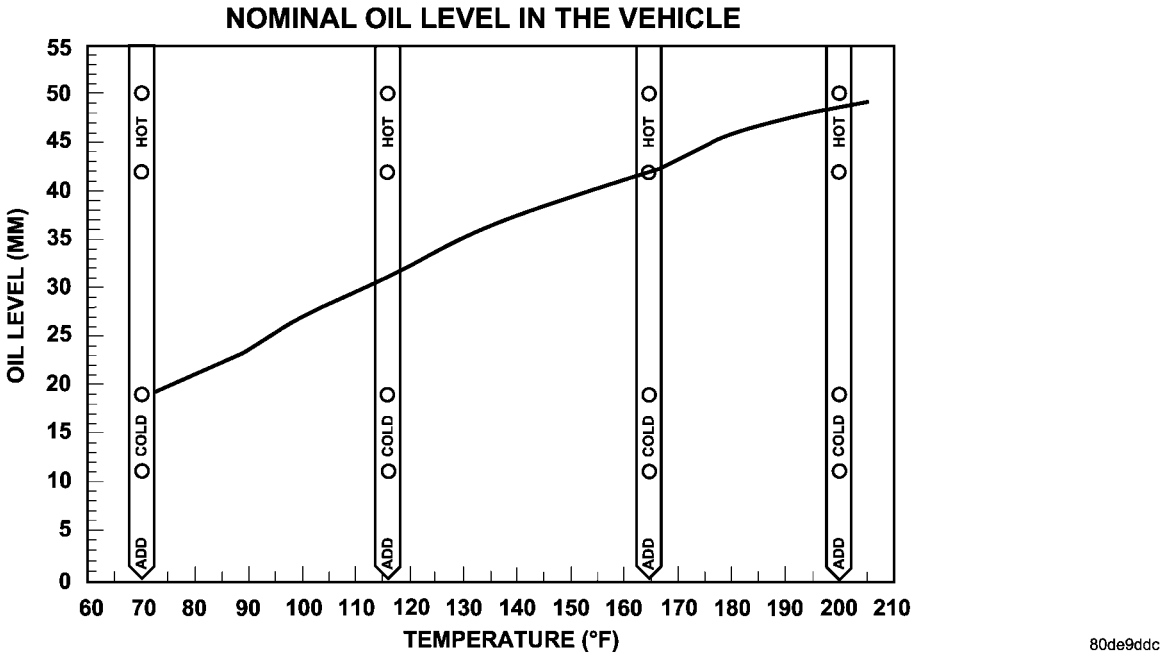

Fig. 157 42RLE Fluid Temperature Chart

FLUID/FILTER SERVICE

NOTE: Only fluids of the type labeled Mopar® ATF+4, Automatic Transmission Fluid, should be used in the transmission sump. A filter change should be made at the time of the transmission oil change. The magnet (on the inside of the oil pan) should also be cleaned with a clean, dry cloth.

NOTE: If the transmission is disassembled for any reason, the fluid and filter should be changed.

(1) Raise vehicle on a hoist. Place a drain container with a large opening, under transmission oil pan.

NOTE: One of the oil pan bolts (5) has a sealing patch applied from the factory. Separate this bolt for reuse.

(2) Loosen pan bolts and tap the pan at one corner to break it loose allowing fluid to drain, then remove the oil pan.

(3) Install a new filter and o-ring on bottom of the valve body and tighten retaining screws to 5 N·m (40 in. lbs.).

NOTE: Before installing the oil pan bolt (5) in the bolt hole located between the torque converter clutch on and U/D clutch pressure tap circuits (Fig. 158), it will be necessary to replentish the sealing patch on the bolt using Mopar® Lock & Seal Adhesive.

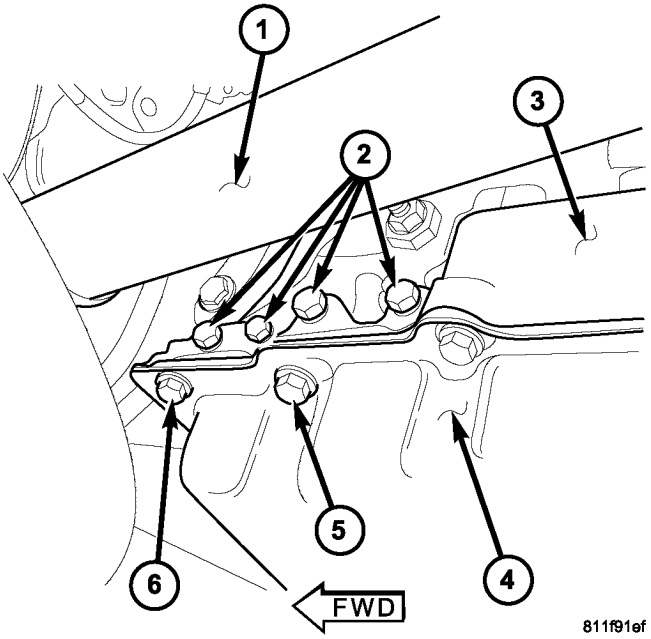

Fig. 158 Pan Fastener

1 - FRONT DRIVESHAFT
2 - PRESSURE PORTS
3 - TRANSMISSION CASE
4 - TRANSMISSION OIL PAN
5 - SECOND TRANSMISSION OIL PAN BOLT ON LEFT SIDE
6 - FIRST TRANSMISSION OIL PAN BOLT

(4) Clean the oil pan and magnet. Reinstall pan using new Mopar® Silicone Adhesive sealant. Tighten oil pan bolts to 19 N·m (165 in. lbs.).

FLUID AND FILTER (Continued)

(5) Pour four quarts of Mopar® ATF+4, Automatic Transmission Fluid, through the dipstick opening.

(6) Start engine and allow to idle for at least one minute. Then, with parking and service brakes applied, move selector lever momentarily to each position, ending in the park or neutral position.

(7) Check the transmission fluid level and add an appropriate amount to bring the transmission fluid level to 3mm (1/8 in.) below the lowest mark on the dipstick.

(8) Recheck the fluid level after the transmission has reached normal operating temperature (180°F.).

(9) To prevent dirt from entering transmission, make certain that dipstick is fully seated into the dipstick opening.

STANDARD PROCEDURE - TRANSMISSION FILL

To avoid overfilling transmission after a fluid change or overhaul, perform the following procedure:

(1) Remove dipstick and insert clean funnel in transmission fill tube.

(2) Add following initial quantity of Mopar® ATF +4, Automatic Transmission Fluid, to transmission:

(a) If only fluid and filter were changed, add **6 pints (3 quarts)** of ATF +4 to transmission.

(b) If transmission was completely overhauled, or torque converter was replaced or drained, add **10 pints (5 quarts)** of ATF +4 to transmission.

(3) Apply parking brakes.

(4) Start and run engine at normal curb idle speed.

(5) Apply service brakes, shift transmission through all gear ranges then back to NEUTRAL, set parking brake, and leave engine running at curb idle speed.

(6) Remove funnel, insert dipstick and check fluid level. If level is low, **add fluid to bring level to MIN mark on dipstick.** Check to see if the oil level is equal on both sides of the dipstick. If one side is noticably higher than the other, the dipstick has picked up some oil from the dipstick tube. Allow the oil to drain down the dipstick tube and re-check.

(7) Drive vehicle until transmission fluid is at normal operating temperature.

(8) With the engine running at curb idle speed, the gear selector in NEUTRAL, and the parking brake applied, check the transmission fluid level.

CAUTION: Do not overfill transmission, fluid foaming and shifting problems can result.

(9) Add fluid to bring level up to MAX arrow mark.

When fluid level is correct, shut engine off, release park brake, remove funnel, and install dipstick in fill tube.

GEARSHIFT CABLE

DIAGNOSIS AND TESTING

GEARSHIFT CABLE

(1) The floor shifter lever and gate positions should be in alignment with all transmission PARK, NEUTRAL, and gear detent positions.

(2) Engine starts must be possible with floor shift lever in PARK or NEUTRAL gate positions only. Engine starts must not be possible in any other gear position.

(3) With floor shift lever handle push-button not depressed and lever in:

(a) PARK position - Apply forward force on center of handle and remove pressure. Engine starts must be possible.

(b) PARK position - Apply rearward force on center of handle and remove pressure. Engine starts must be possible.

(c) NEUTRAL position - Normal position. Engine starts must be possible.

(d) NEUTRAL position - Engine running and brakes applied, apply forward force on center of shift handle. Transmission shall not be able to shift from NEUTRAL to REVERSE.

GEARSHIFT CABLE (Continued)

REMOVAL

(1) Shift transmission into PARK.

(2) Raise vehicle.

(3) Remove the shift cable eyelet from the transmission manual shift lever (Fig. 159).

(4) Remove shift cable from the cable support bracket.

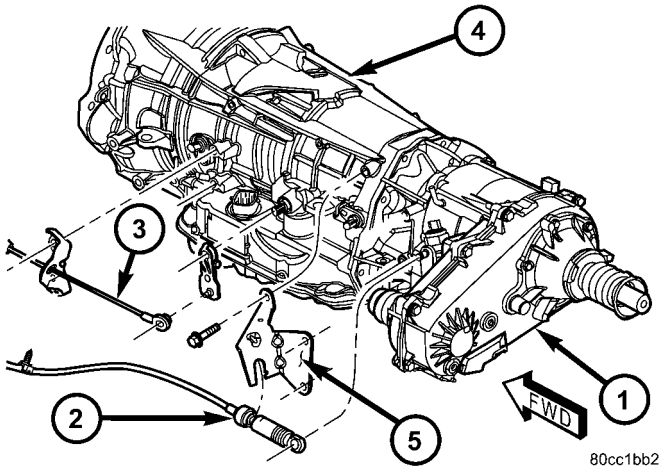

Fig. 159 Remove Shift Cables - Typical

1 - TRANSFER CASE
2 - TRANSFER CASE SHIFT CABLE
3 - TRANSMISSION SHIFT CABLE
4 - AUTOMATIC TRANSMISSION
5 - TRANSFER CASE SHIFT CABLE BRACKET

(5) Lower vehicle.

(6) Remove necessary console parts for access to shift lever assembly and shift cable. (Refer to 23 - BODY/INTERIOR/FLOOR CONSOLE - REMOVAL)

(7) Disconnect cable at shift lever and shifter assembly bracket (Fig. 160).

(8) Remove the nuts holding the shift cable seal plate to the floor pan (Fig. 161).

(9) Pull cable through floor panel opening.

(10) Remove shift cable from vehicle.

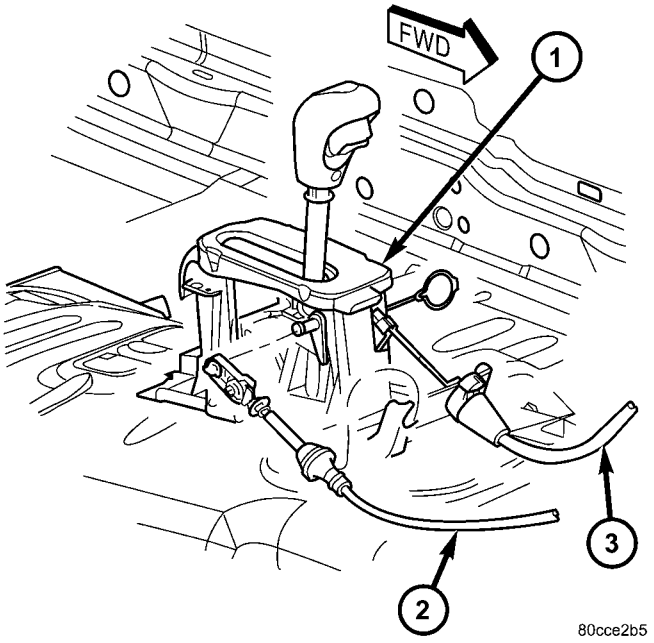

Fig. 160 Transmission Shift Cable At Shifter

1 - SHIFTER ASSEMBLY
2 - GEARSHIFT CABLE
3 - BTSI CABLE

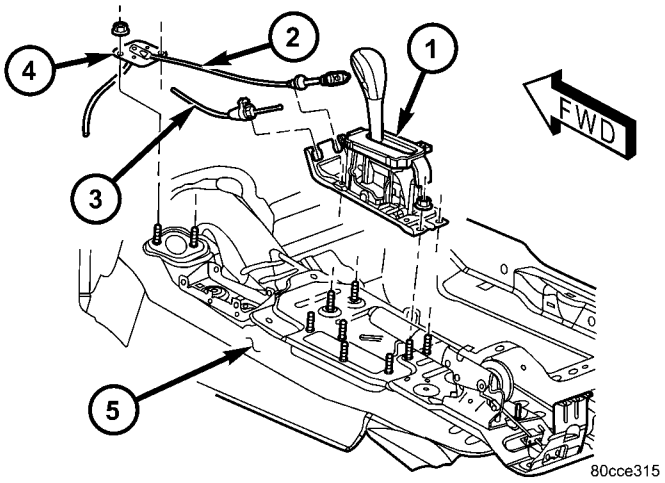

Fig. 161 Transmission Shifter Assembly

1 - SHIFTER ASSEMBLY
2 - GEARSHIFT CABLE
3 - PARK-INTERLOCK CABLE
4 - SHIFT CABLE SEAL PLATE
5 - FLOOR PAN

GEARSHIFT CABLE (Continued)

INSTALLATION

(1) Route cable through hole in floor pan.

(2) Install seal plate to studs in floor pan (Fig. 162).

(3) Install nuts to hold seal plate to floor pan. Tighten nuts to 7 N·m (65 in.lbs.).

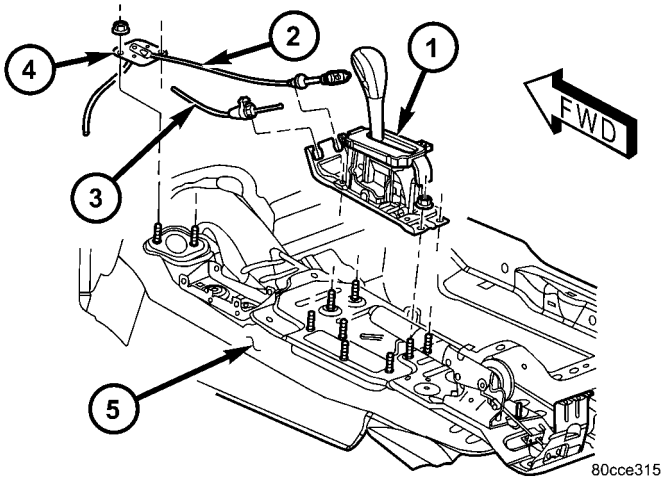

Fig. 162 Transmission Shifter Assembly

1 - SHIFTER ASSEMBLY
2 - GEARSHIFT CABLE
3 - PARK-INTERLOCK CABLE
4 - SHIFT CABLE SEAL PLATE
5 - FLOOR PAN

(4) Install the shift cable to the shifter assembly bracket (Fig. 163). Push cable into the bracket until secure.

(5) Place the floor shifter lever in PARK position.

(6) Loosen the adjustment screw on the shift cable.

(7) Snap the shift cable onto the shift lever pin.

(8) Raise the vehicle.

(9) Install the shift cable to the shift cable support bracket (Fig. 164).

(10) Shift the transmission into PARK. PARK is the rearmost detent position on the transmission manual shift lever.

(11) Snap the shift cable onto the transmission manual shift lever.

(12) Lower vehicle.

(13) Verify that the shift lever is in the PARK position.

(14) Tighten the adjustment screw to 7 N·m (65 in.lbs.).

(15) Verify correct shifter operation.

(16) Install any console parts removed for access to shift lever assembly and shift cable. (Refer to 23 - BODY/INTERIOR/FLOOR CONSOLE - INSTALLATION)

ADJUSTMENTS - GEARSHIFT CABLE

Check adjustment by starting the engine in PARK and NEUTRAL. Adjustment is CORRECT if the engine starts only in these positions. Adjustment is INCORRECT if the engine starts in one but not both positions. If the engine starts in any position other than PARK or NEUTRAL, or if the engine will not start at all, the TRS may be faulty.

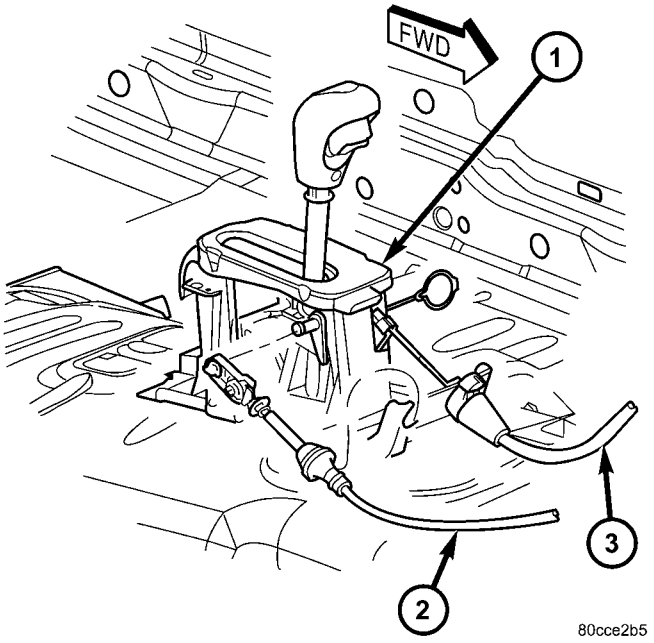

Fig. 163 Transmission Shift Cable At Shifter

1 - SHIFTER ASSEMBLY
2 - GEARSHIFT CABLE
3 - BTSI CABLE

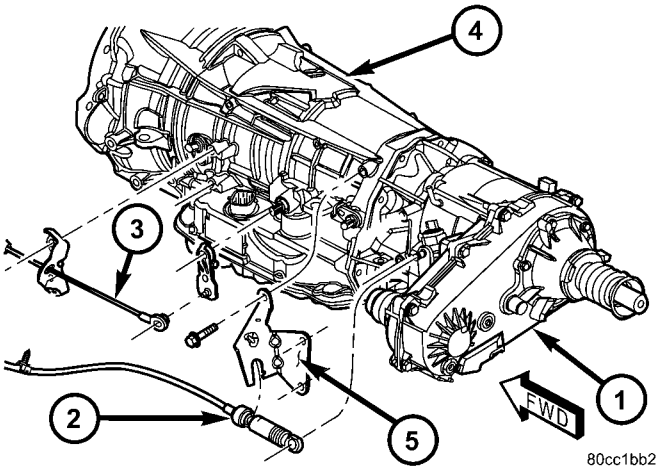

Fig. 164 Install Shift Cable - Typical

1 - TRANSFER CASE
2 - TRANSFER CASE SHIFT CABLE
3 - TRANSMISSION SHIFT CABLE
4 - AUTOMATIC TRANSMISSION
5 - TRANSFER CASE SHIFT CABLE BRACKET

Gearshift Adjustment Procedure

(1) Shift transmission into PARK.

GEARSHIFT CABLE (Continued)

(2) Remove floor console as necessary for access to the shift cable adjustment. (Refer to 23 - BODY/INTERIOR/FLOOR CONSOLE - REMOVAL)

(3) Loosen the shift cable adjustment screw (Fig. 165).

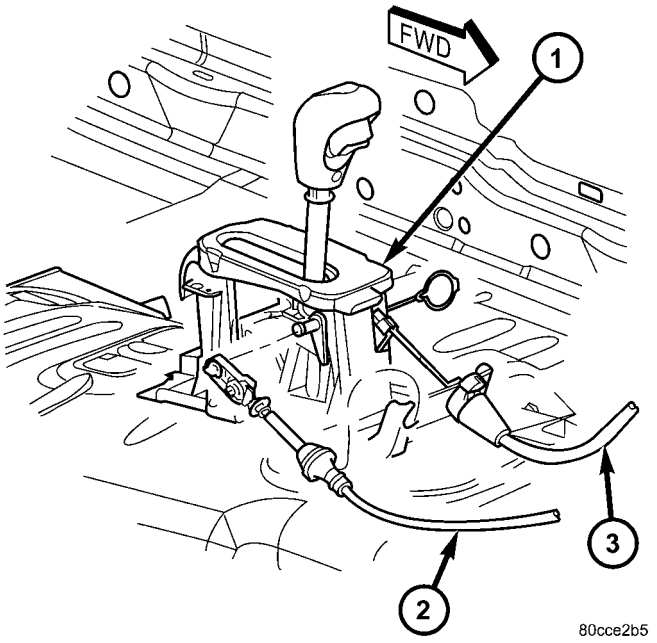

Fig. 165 Transmission Shift Cable At Shifter

1 - SHIFTER ASSEMBLY
2 - GEARSHIFT CABLE
3 - BTSI CABLE

(4) Raise vehicle.

(5) Unsnap cable eyelet from transmission shift lever.

(6) Verify transmission shift lever is in PARK detent by moving lever fully rearward. Last rearward detent is PARK position.

(7) Verify positive engagement of transmission park lock by attempting to rotate propeller shaft. Shaft will not rotate when park lock is engaged.

(8) Snap cable eyelet onto transmission shift lever.

(9) Lower vehicle

(10) Tighten the shift cable adjustment screw to 7 N·m (65 in.lbs.).

(11) Verify correct operation.

(12) Install any floor console components removed for access. (Refer to 23 - BODY/INTERIOR/FLOOR CONSOLE - INSTALLATION)

HOLDING CLUTCHES

DESCRIPTION

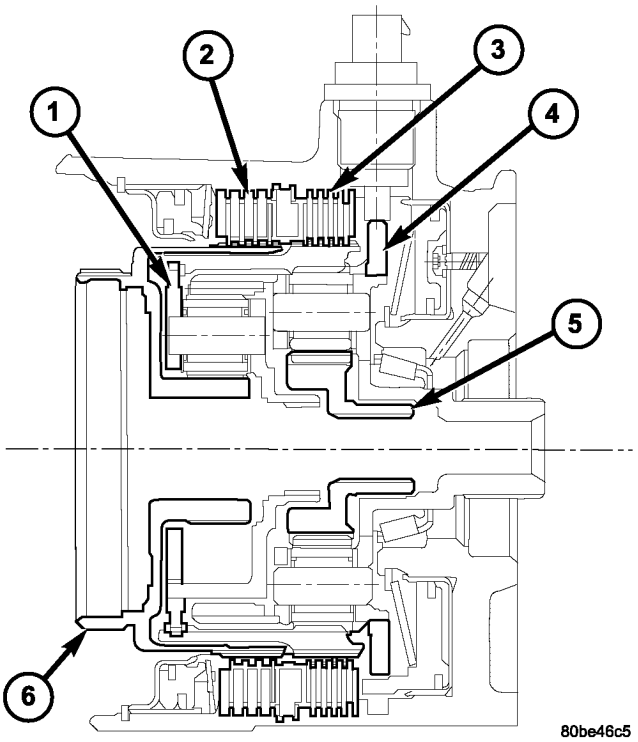

Fig. 166 2/4 and Low/Reverse Clutches

1 - FRONT PLANET CARRIER/REAR ANNULUS
2 - 2/4 CLUTCH
3 - L/R CLUTCH
4 - REAR PLANET CARRIER/FRONT ANNULUS
5 - REAR SUN GEAR
6 - FRONT SUN GEAR ASSEMBLY

Two hydraulically applied multi-disc clutches are used to hold planetary geartrain components stationary while the input clutches drive others. The 2/4 (2) and Low/Reverse (3) clutches are considered holding clutches and are contained at the rear of the transmission case (Fig. 166).

OPERATION

NOTE: (Refer to 21 - TRANSMISSION/AUTOMATIC - 42RLE - DIAGNOSIS AND TESTING) for a collective view of which clutch elements are applied at each position of the selector lever.

HOLDING CLUTCHES (Continued)

2/4 CLUTCH

The 2/4 clutch is hydraulically applied in second and fourth gears by pressurized fluid against the 2/4 clutch piston. When the 2/4 clutch is applied, the front sun gear assembly is held or grounded to the transmission case.

LOW/REVERSE CLUTCH

The Low/Reverse clutch is hydraulically applied in park, reverse, neutral, and first gears by pressurized fluid against the Low/Reverse clutch piston. When the Low/Reverse clutch is applied, the front planet carrier/rear annulus assembly is held or grounded to the transmission case.

INPUT CLUTCH ASSEMBLY

DISASSEMBLY

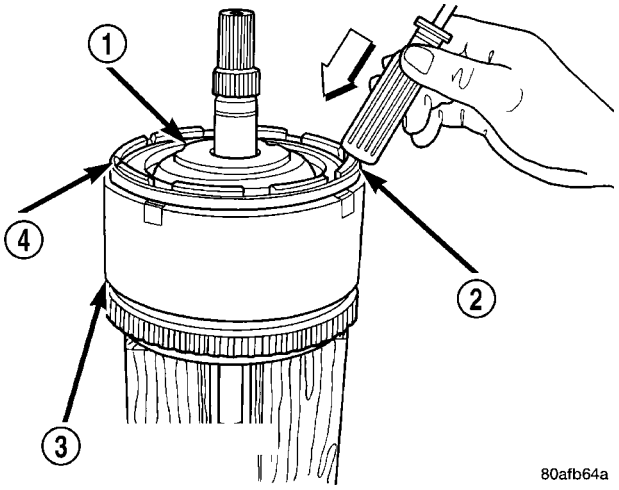

Fig. 167 Tapping Reaction Plate

1 - #4 THRUST PLATE (SELECT)
2 - TAP DOWN REVERSE CLUTCH REACTION PLATE TO REMOVE OR INSTALL SNAP RING
3 - INPUT CLUTCH RETAINER
4 - REVERSE CLUTCH REACTION PLATE

(1) Mount input clutch assembly to Input Clutch Pressure Fixture (Tool 8391).

(2) Tap down (2) reverse clutch reaction plate (4) to release pressure from snap ring (Fig. 167).

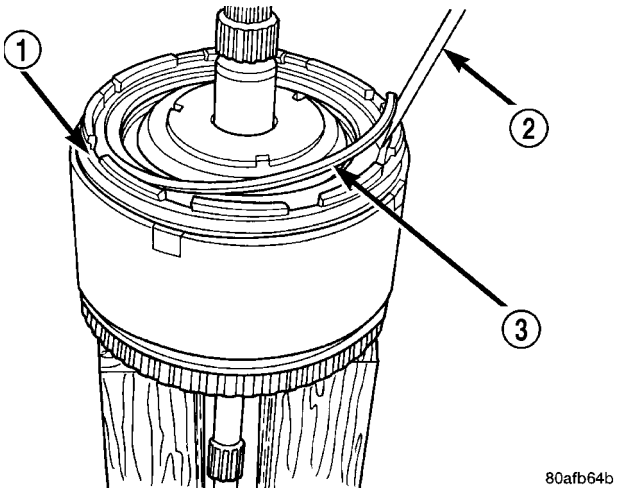

Fig. 168 Reverse Clutch Snap Ring

1 - REACTION PLATE
2 - SCREWDRIVER
3 - REVERSE CLUTCH SNAP RING (SELECT)

(3) Remove reverse clutch snap ring (3) (Fig. 168).

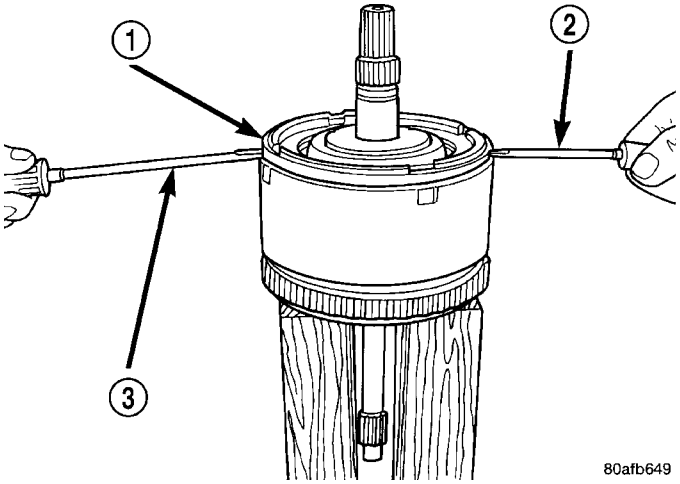

Fig. 169 Pry Reverse Clutch Reaction Plate

1 - REVERSE CLUTCH REACTION PLATE
2 - SCREWDRIVER
3 - SCREWDRIVER

(4) Pry up reverse clutch reaction plate (1) (Fig. 169).

(5) Remove reverse clutch reaction plate (1) (Fig. 170).

NOTE: Tag reverse clutch pack for reassembly identification.

INPUT CLUTCH ASSEMBLY (Continued)

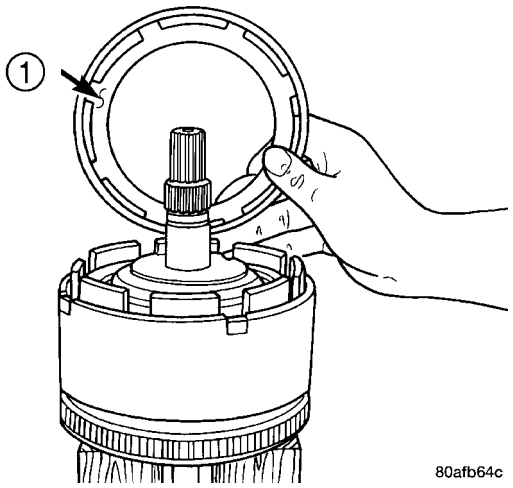

Fig. 170 Reverse Clutch Reaction Plate

1 - REVERSE CLUTCH REACTION PLATE (INSTALL FLAT SIDE DOWN)

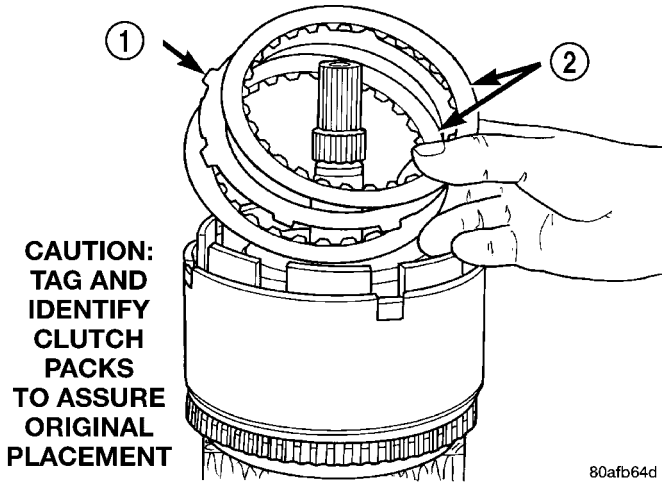

Fig. 171 Reverse Clutch Pack

1 - REVERSE CLUTCH PLATE
2 - REVERSE CLUTCH DISC

(6) Remove the reverse clutch pack (two fibers/one steel) (1, 2) (Fig. 171).

(7) Remove the OD/Reverse reaction plate (1) snap ring (3) (Fig. 172).

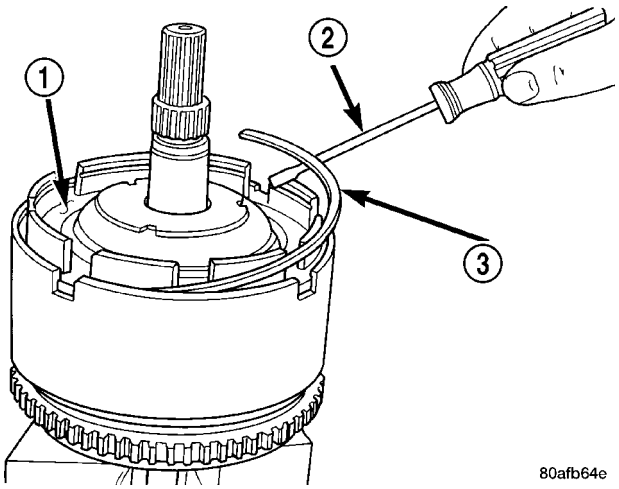

Fig. 172 OD/Reverse Pressure Plate Snap Ring

1 - OD/REVERSE PRESSURE PLATE
2 - SCREWDRIVER
3 - OD/REVERSE PRESSURE PLATE SNAP RING

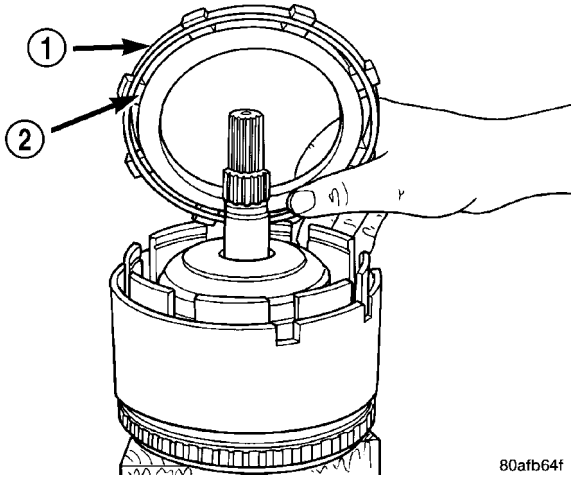

Fig. 173 OD/Reverse Reaction Plate

1 - OD/REVERSE PRESSURE PLATE (STEP SIDE DOWN)
2 - (STEP SIDE DOWN)

(8) Remove OD/Reverse pressure plate (1) (Fig. 173).

(9) Remove OD/Reverse reaction plate wave snap ring (2) (Fig. 174).

INPUT CLUTCH ASSEMBLY (Continued)

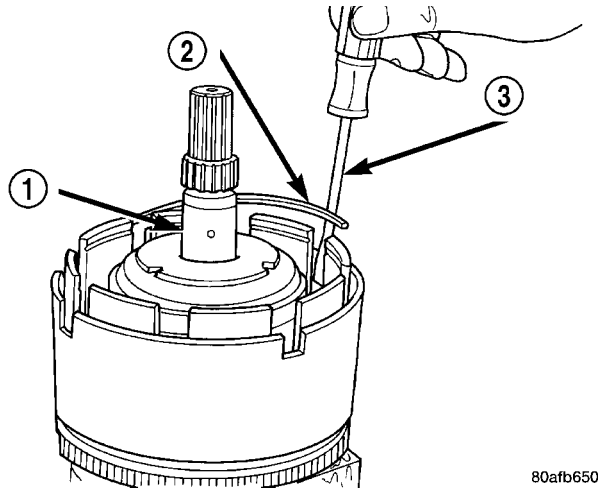

Fig. 174 Waved Snap Ring

1 - OVERDRIVE SHAFT ASSEMBLY
2 - OD/REVERSE CLUTCH WAVED SNAP RING
3 - SCREWDRIVER

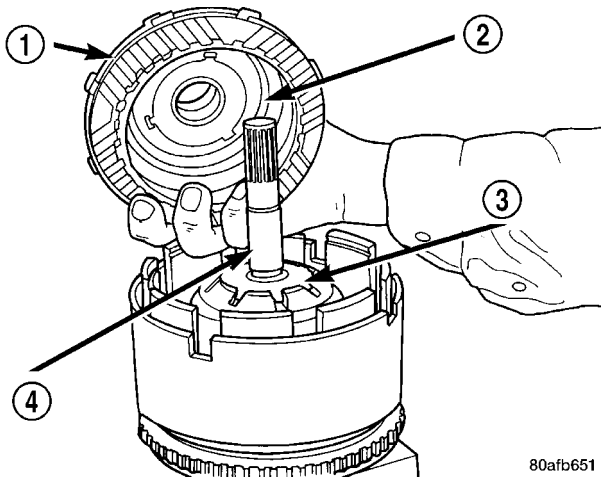

Fig. 175 Remove OD Clutch Pack

1 - OVERDRIVE SHAFT ASSEMBLY AND OD CLUTCH PACK
2 - #3 THRUST PLATE
3 - #3 THRUST WASHER
4 - UNDERDRIVE SHAFT ASSEMBLY

(10) Remove OD shaft/hub and OD clutch pack (1) (Fig. 175).

NOTE: Tag overdrive clutch pack for reassembly identification.

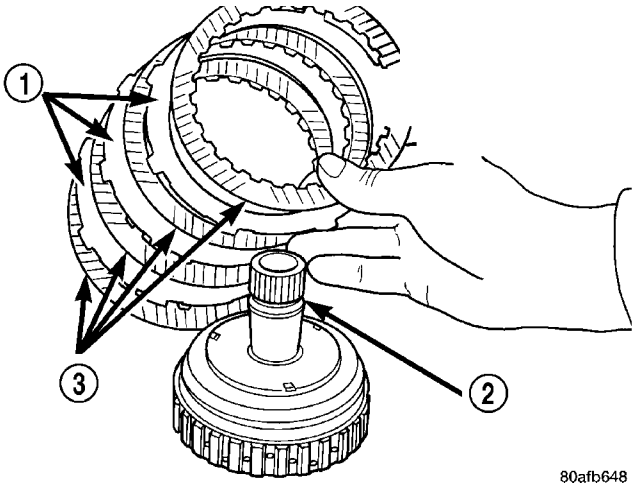

Fig. 176 Overdrive Clutch Pack

1 - OVERDRIVE CLUTCH PLATE
2 - OVERDRIVE SHAFT ASSEMBLY
3 - OVERDRIVE CLUTCH DISC

(11) Remove the overdrive clutch (1, 3) from the overdrive hub/shaft (2) (Fig. 176).

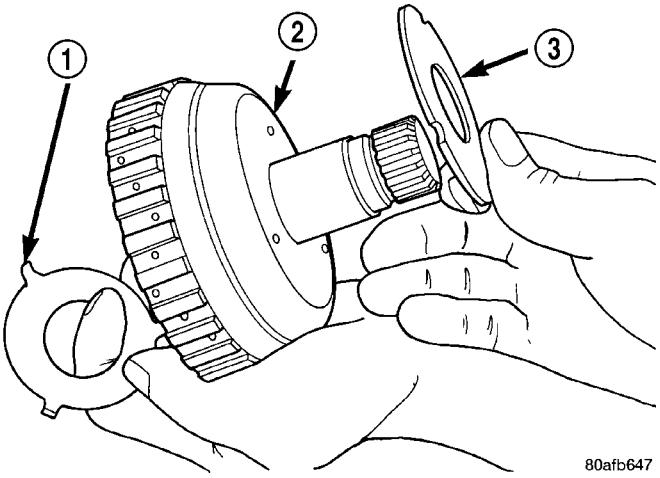

Fig. 177 #3 and #4 Thrust Washers

1 - #3 THRUST PLATE (3 TABS)
2 - OD SHAFT ASSEMBLY
3 - #4 THRUST PLATE (3 SLOTS)

(12) Remove and inspect number 3 and 4 thrust plates (1, 3) (Fig. 177).

(13) Remove the underdrive shaft assembly (2) (Fig. 178).

INPUT CLUTCH ASSEMBLY (Continued)

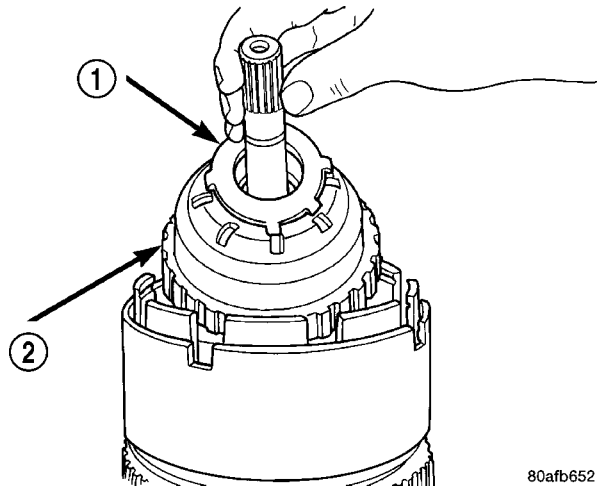

Fig. 178 Underdrive Shaft Assembly

1 - #3 THRUST WASHER (5 TABS)
2 - UNDERDRIVE SHAFT ASSEMBLY

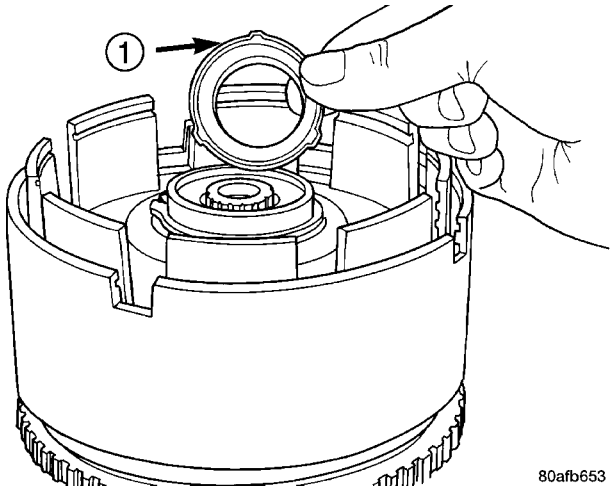

Fig. 179 No 2 Needle Bearing

1 - #2 NEEDLE BEARING (NOTE 3 TABS)

(14) Remove the number 2 needle bearing (1) (Fig. 179).

(15) Remove the OD/UD reaction plate tapered snap ring (1) (Fig. 180).

NOTE: The OD/UD clutch reaction plate has a step on both sides. The OD/UD clutches reaction plate goes tapered step side up.

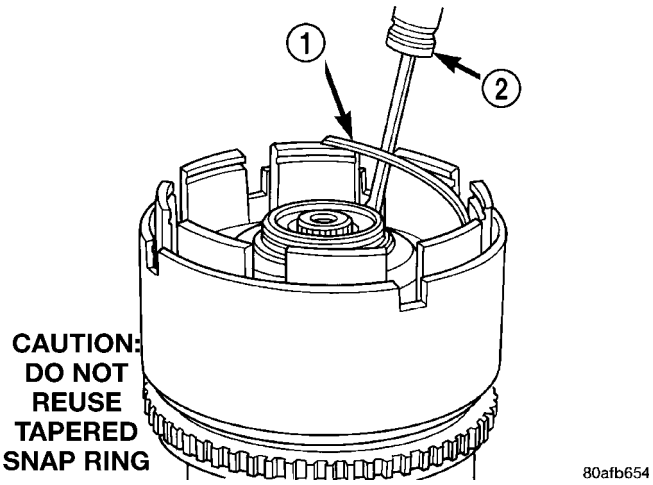

Fig. 180 Tapered Snap Ring

1 - OVERDRIVE/UNDERDRIVE CLUTCHES REACTION PLATE TAPERED SNAP RING
2 - SCREWDRIVER (DO NOT SCRATCH REACTION PLATE)

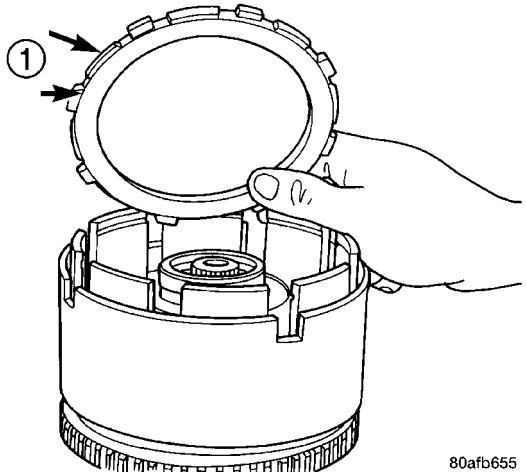

Fig. 181 OD/UD Reaction Plate

1 - OD/UD CLUTCH REACTION PLATE (STEP SIDE DOWN)

(16) Remove the OD/UD reaction plate (1) (Fig. 181).

(17) Remove the first UD clutch disc (1) (Fig. 182).

(18) Remove the UD clutch flat snap ring (1) (Fig. 183).

NOTE: Tag underdrive clutch pack for reassembly identification.

INPUT CLUTCH ASSEMBLY (Continued)

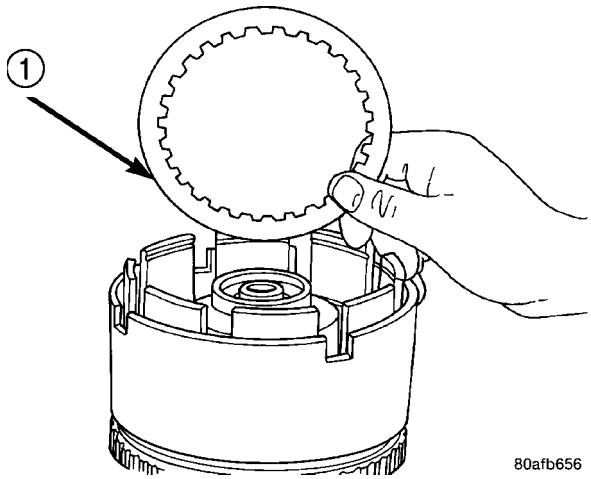

Fig. 182 Remove Last UD Clutch Disc

1 - ONE UNDERDRIVE CLUTCH DISC

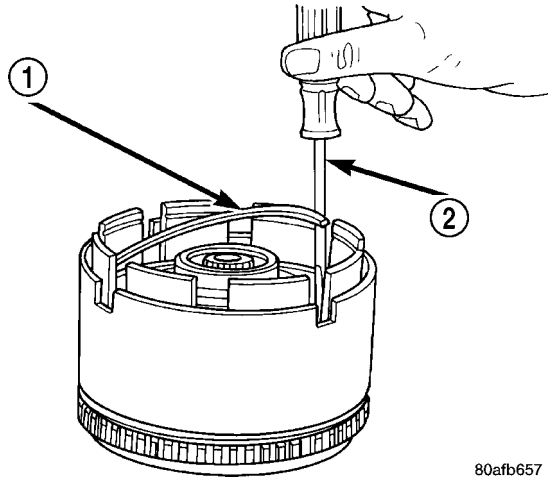

Fig. 183 UD Clutch Flat Snap Ring

1 - UNDERDRIVE CLUTCH REACTION PLATE FLAT SNAP RING
2 - SCREWDRIVER

(19) Remove the UD clutch pack (1, 3) (Fig. 184).

CAUTION: Compress return spring just enough to remove or install snap ring.

(20) Using Tool 5059A (4) and an arbor press (2), compress UD clutch piston enough to remove snap ring (3) (Fig. 185).

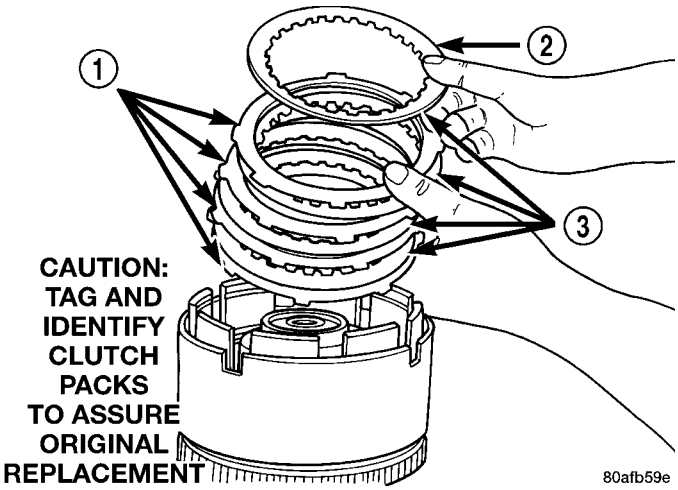

Fig. 184 Underdrive Clutch Pack

1 - CLUTCH PLATE
2 - ONE UD CLUTCH DISC
3 - CLUTCH DISC

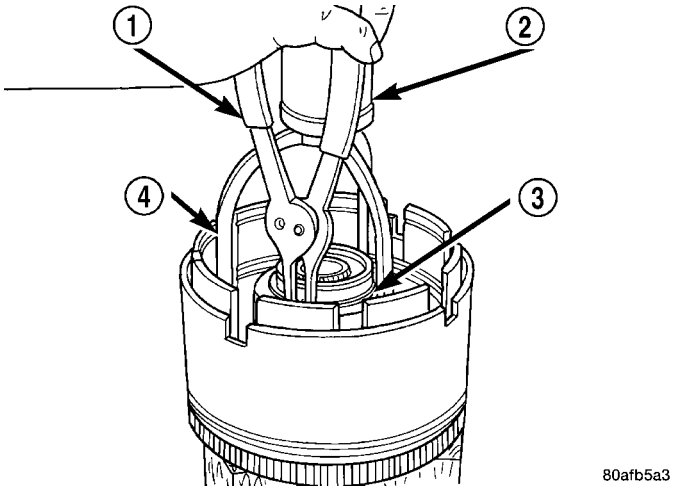

Fig. 185 UD Spring Retainer Snap Ring

1 - SNAP RING PLIERS
2 - ARBOR PRESS RAM
3 - SNAP RING
4 - SPECIAL TOOL 5059A

(21) Remove the underdrive spring retainer snap ring (2), spring retainer (1), and spring (4) (Fig. 186).

(22) Remove the UD clutch piston (1) (Fig. 187).

INPUT CLUTCH ASSEMBLY (Continued)

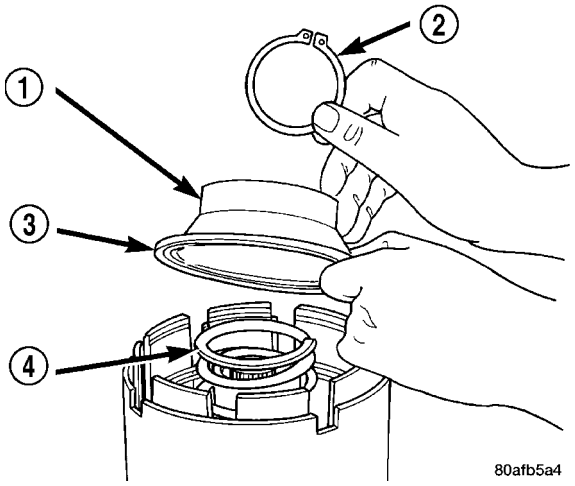

Fig. 186 UD Return Spring and Retainer

1 - UNDERDRIVE SPRING RETAINER
2 - SNAP RING
3 - SEAL
4 - PISTON RETURN SPRING

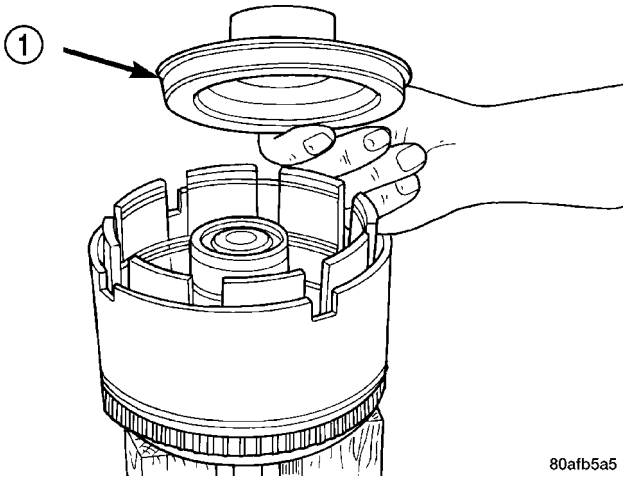

Fig. 187 Underdrive Clutch Piston

1 - PISTON

(23) Remove the input hub tapered snap ring (2) (Fig. 188).

(24) Tap on input hub (1) with soft faced hammer (2) and separate input hub from OD/Reverse piston and clutch retainer (Fig. 189).

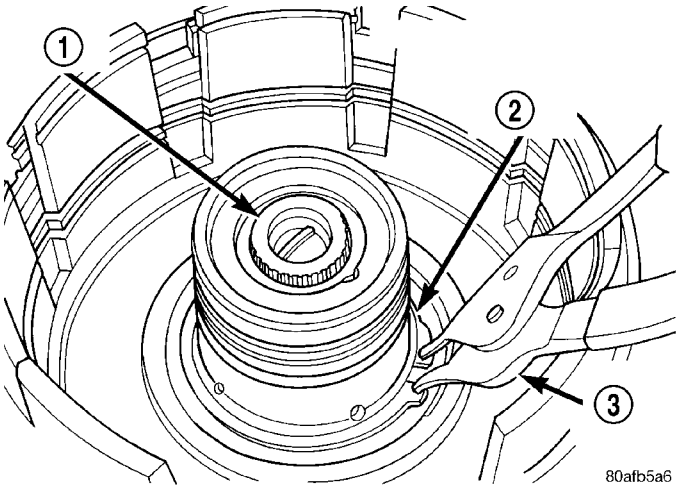

Fig. 188 Input Hub Tapered Snap Ring

1 - INPUT SHAFT
2 - INPUT HUB SNAP RING (TAPERED SIDE UP WITH TABS IN CAVITY)
3 - SNAP RING PLIERS

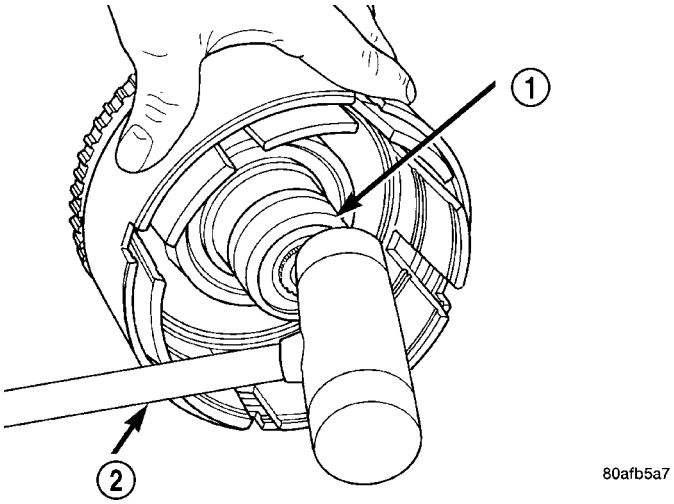

Fig. 189 Tap on Input Hub

1 - INPUT SHAFT AND HUB ASSEMBLY
2 - PLASTIC HAMMER

INPUT CLUTCH ASSEMBLY (Continued)

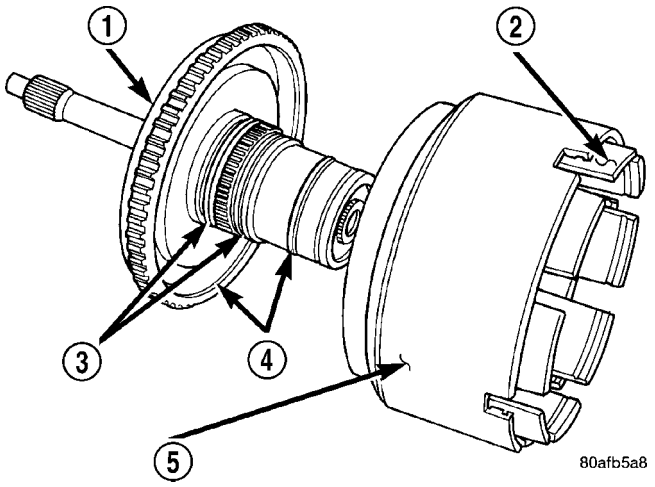

Fig. 190 Input Hub Removed

1 - INPUT SHAFT AND HUB ASSEMBLY
2 - INPUT CLUTCH RETAINER
3 - O-RING
4 - SEAL
5 - OVERDRIVE/REVERSE PISTON

(25) Separate the input hub from OD/Reverse piston (5) and clutch retainer (2) (Fig. 190).

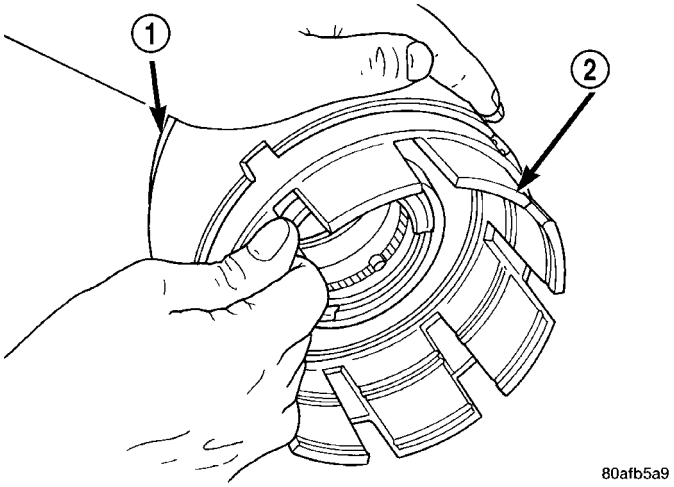

Fig. 191 Pull Retainer from Piston

1 - OVERDRIVE/REVERSE PISTON
2 - INPUT CLUTCH RETAINER

(26) Separate clutch retainer (2) from OD/Reverse piston (1) (Fig. 191).

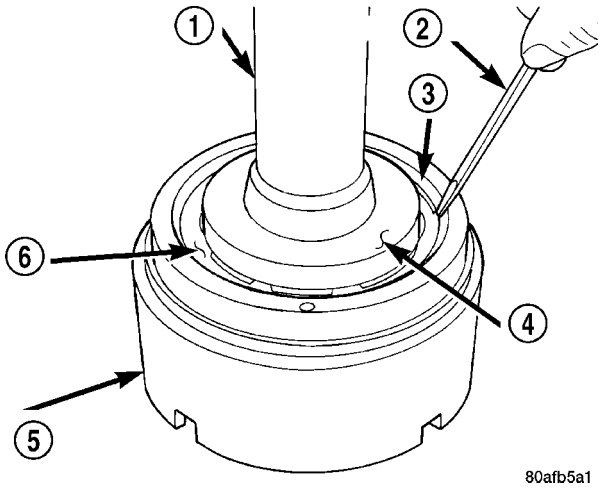

Fig. 192 Remove Snap Ring

1 - ARBOR PRESS RAM (COMPRESS RETURN SPRING JUST ENOUGH TO REMOVE OR INSTALL SNAP RING)
2 - SCREWDRIVER
3 - SNAP RING
4 - SPECIAL TOOL 6057
5 - OD/REVERSE PISTON
6 - RETURN SPRING

(27) Using Tool 6057 (4) and an arbor press(1), compress OD/Reverse piston (5) return spring just enough to remove snap ring (3) (Fig. 192).

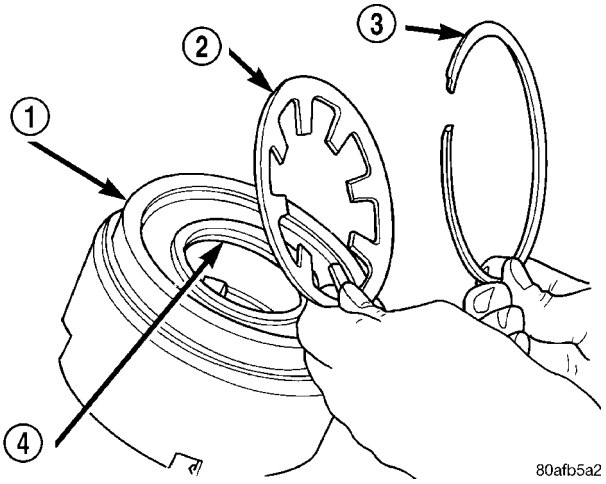

Fig. 193 Return Spring and Snap Ring

1 - OD/REVERSE PISTON
2 - RETURN SPRING
3 - SNAP RING
4 - O-RING

(28) Remove the OD/Reverse piston (5) return spring and snap ring (3) (Fig. 193).

INPUT CLUTCH ASSEMBLY (Continued)

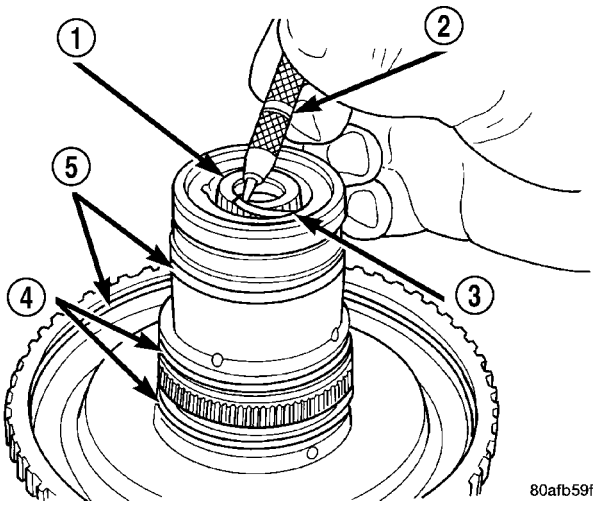

Fig. 194 Remove Input Shaft Snap Ring

1 - INPUT SHAFT
2 - SHARP-POINTED TOOL
3 - SNAP RING
4 - O-RINGS
5 - SEALS

(29) Remove input shaft (1) to input clutch hub snap ring (3) (Fig. 194).

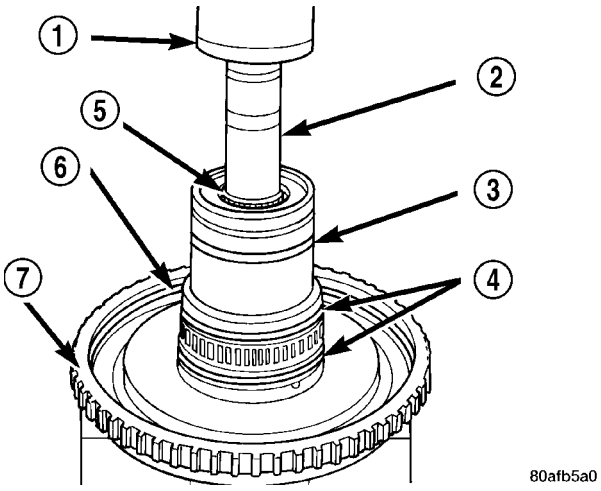

Fig. 195 Remove Input Shaft

1 - ARBOR PRESS RAM
2 - SOCKET
3 - SEAL
4 - O-RINGS
5 - INPUT SHAFT
6 - SEAL
7 - INPUT CLUTCH HUB

(30) Using a suitably sized socket (2) and an arbor press (1), remove input shaft (5) from input shaft hub (Fig. 195).

ASSEMBLY

Use petrolatum on all seals to ease assembly of components.

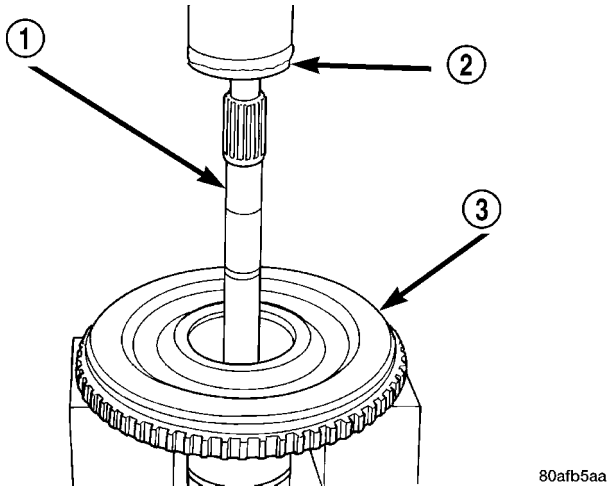

Fig. 196 Install Input Shaft

1 - INPUT SHAFT
2 - ARBOR PRESS RAM
3 - INPUT CLUTCH HUB

(1) Using an arbor press(2), install input shaft (1) to input shaft hub (2) (Fig. 196).

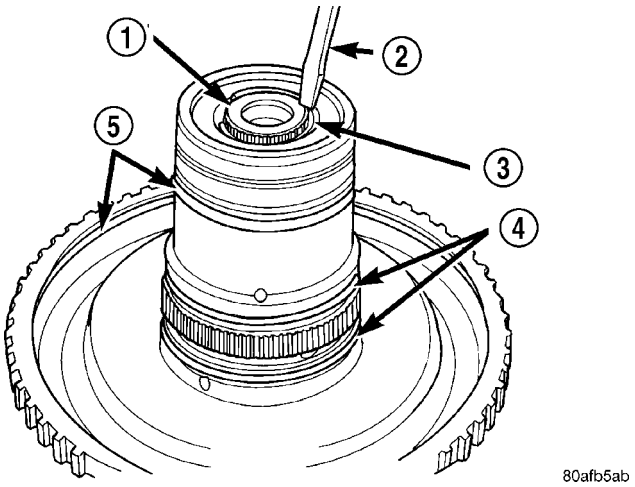

Fig. 197 Install Input Shaft Snap Ring

1 - INPUT SHAFT
2 - SCREWDRIVER (DO NOT SCRATCH BEARING SURFACE)
3 - SNAP RING
4 - O-RINGS
5 - SEALS

(2) Install input shaft snap ring (3) (Fig. 197).

INPUT CLUTCH ASSEMBLY (Continued)

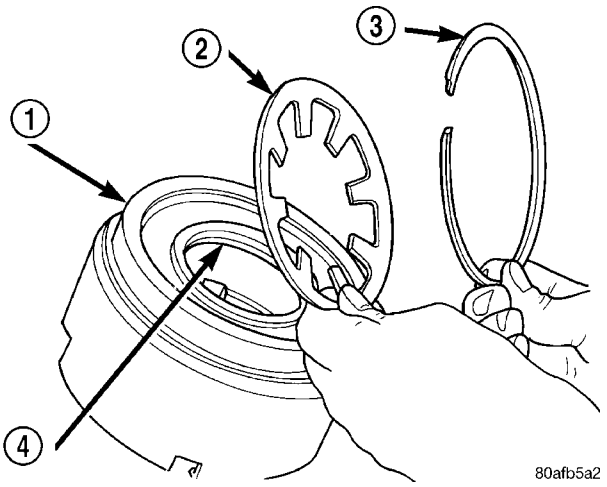

Fig. 198 Return Spring and Snap Ring

1 - OD/REVERSE PISTON
2 - RETURN SPRING
3 - SNAP RING
4 - O-RING

(3) Position the OD/Reverse piston return spring (2) and snap ring (3) onto the OD/Reverse piston (1) (Fig. 198).

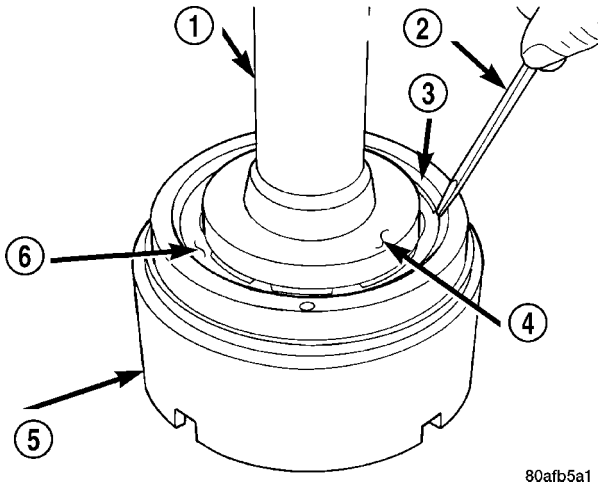

Fig. 199 Install Snap Ring

1 - ARBOR PRESS RAM (COMPRESS RETURN SPRING JUST ENOUGH TO REMOVE OR INSTALL SNAP RING)
2 - SCREWDRIVER
3 - SNAP RING
4 - SPECIAL TOOL 6057
5 - OD/REVERSE PISTON
6 - RETURN SPRING

(4) Using an arbor press (1) and Tool 6057 (4), install the OD/Reverse piston return spring (6) and snap ring (3) (Fig. 199).

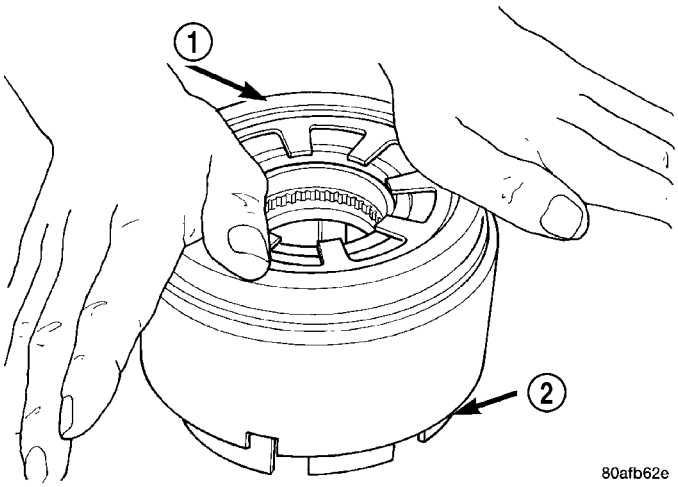

Fig. 200 Install OD/Reverse Piston

1 - PUSH DOWN TO INSTALL OVERDRIVE/REVERSE PISTON
2 - INPUT CLUTCHES RETAINER

(5) Install the OD/Reverse piston (1) assembly to the input clutch retainer (2) (Fig. 200).

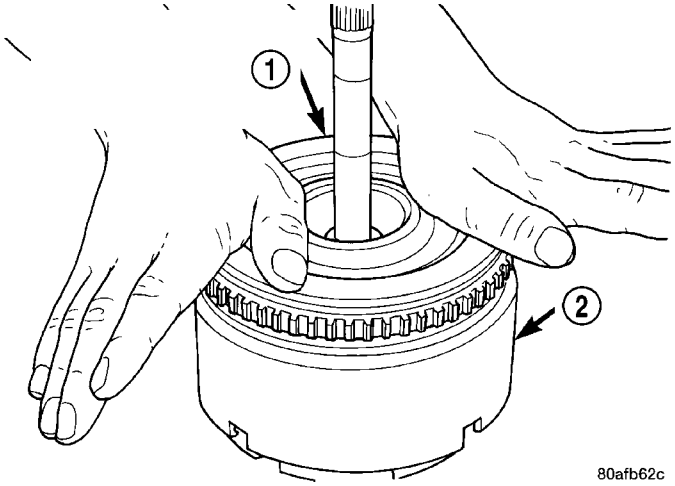

Fig. 201 Install Input Shaft Hub Assembly

1 - PUSH DOWN TO INSTALL INPUT SHAFT HUB ASSEMBLY (ROTATE TO ALIGN SPLINES)
2 - OD/REV. PISTON

(6) Install the input hub/shaft assembly (1) to the OD/Reverse piston/clutch retainer assembly (2) (Fig. 201).

INPUT CLUTCH ASSEMBLY (Continued)

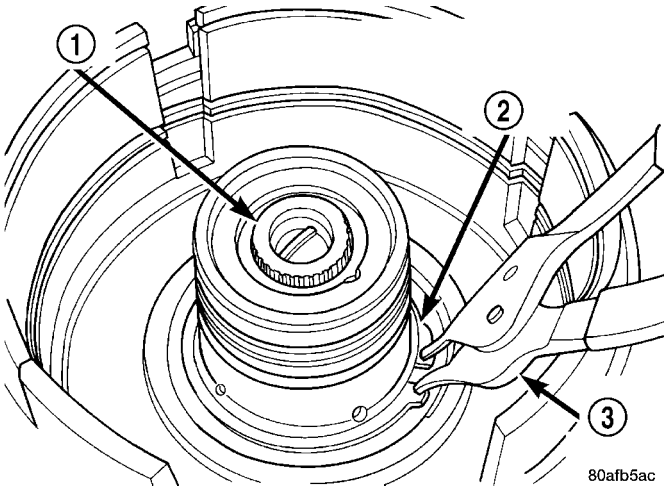

Fig. 202 Install Input Hub Tapered Snap Ring

1 - INPUT SHAFT
2 - INPUT HUB SNAP RING (TAPERED SIDE UP WITH TABS IN CAVITY)
3 - SNAP RING PLIERS

(7) Install input hub tapered snap ring (2) (Fig. 202). **Make sure snap ring is fully seated.**

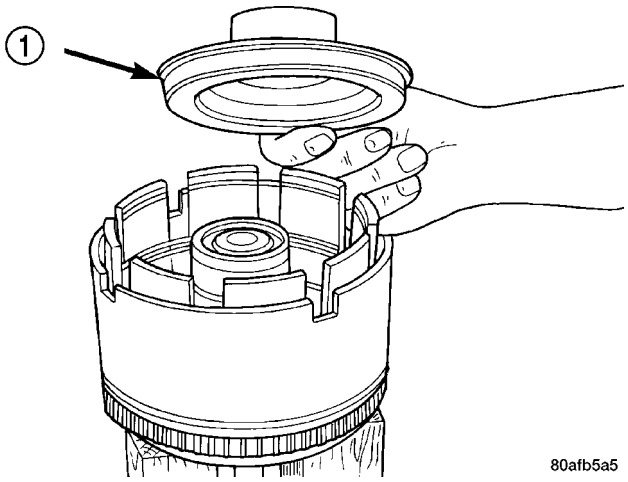

Fig. 203 Underdrive Clutch Piston

1 - PISTON

(8) Install the UD clutch piston (1) (Fig. 203).

(9) Install UD piston return spring (1)and Tool 5067 (2) (Fig. 204).

(10) Position the UD spring retainer (1) and snap ring (2) on the piston return spring (4) (Fig. 205).

CAUTION: Compress return spring just enough to install snap ring.

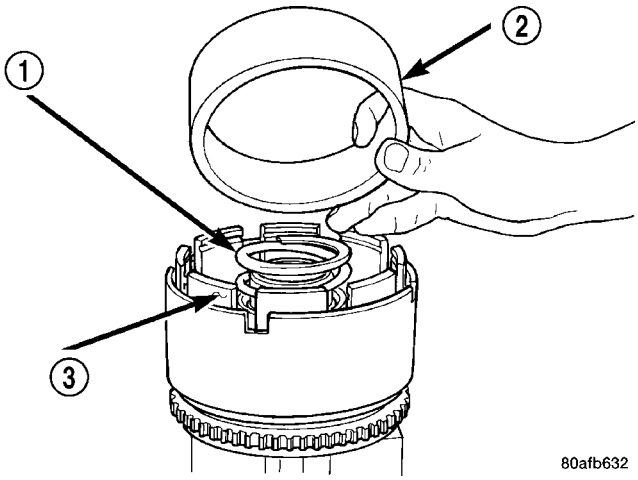

Fig. 204 Seal Compressor Special Tool 5067

1 - PISTON RETURN SPRING
2 - SPECIAL TOOL 5067
3 - INPUT CLUTCH RETAINER

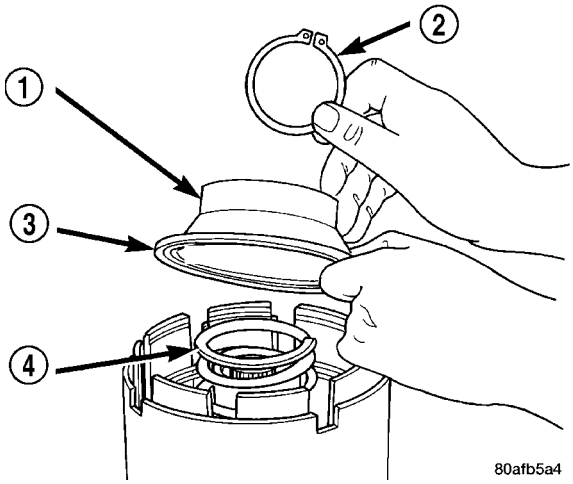

Fig. 205 UD Return Spring and Retainer

1 - UNDERDRIVE SPRING RETAINER
2 - SNAP RING
3 - SEAL
4 - PISTON RETURN SPRING

(11) Using Tool 5059A (6) and an arbor press (1), install the UD spring retainer and snap ring (3) (Fig. 206).

(12) Install the UD clutch pack (four fibers/four steels) (1, 3) (Fig. 207). Leave the top disc (2) out until after the snap ring is installed.

INPUT CLUTCH ASSEMBLY (Continued)

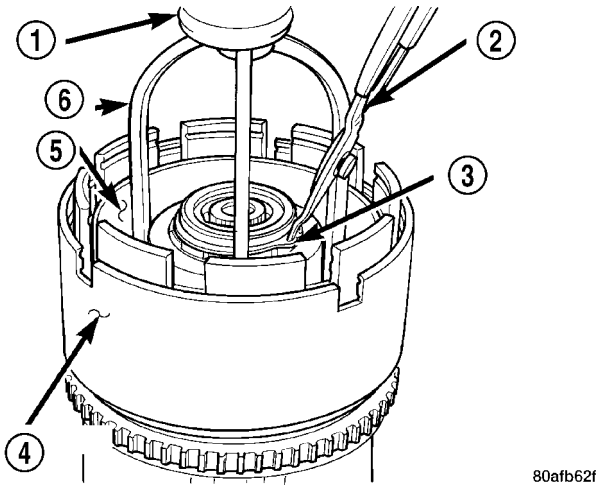

Fig. 206 Install UD Spring Retainer and Snap Ring

1 - ARBOR PRESS RAM
2 - SNAP RING PLIERS
3 - SNAP RING
4 - OD/REVERSE PISTON
5 - TOOL 5067
6 - TOOL 5059A

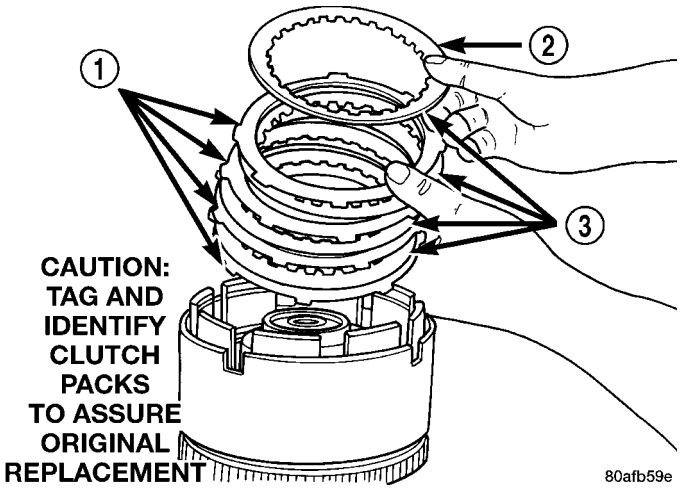

Fig. 207 Underdrive Clutch Pack

1 - CLUTCH PLATE
2 - ONE UD CLUTCH DISC
3 - CLUTCH DISC

(13) Install the UD clutch flat snap ring (1) (Fig. 208).

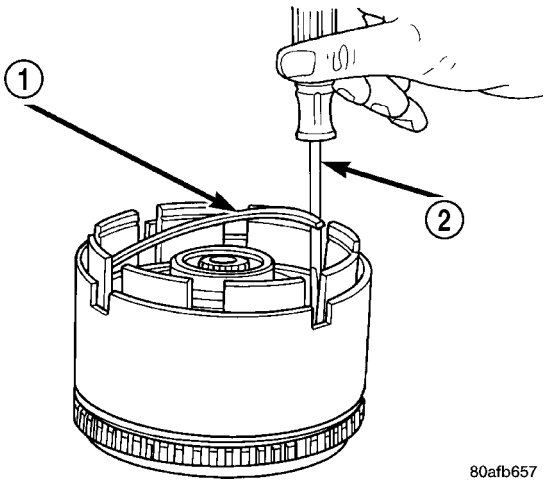

Fig. 208 UD Clutch Flat Snap Ring

1 - UNDERDRIVE CLUTCH REACTION PLATE FLAT SNAP RING
2 - SCREWDRIVER

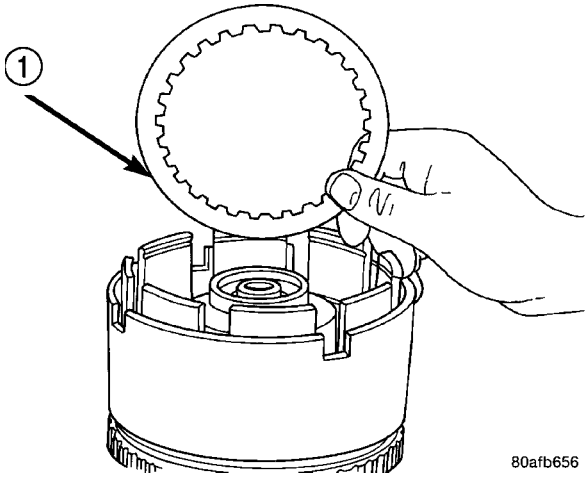

Fig. 209 Install Last UD Clutch Disc

1 - ONE UNDERDRIVE CLUTCH DISC

(14) Install the last UD clutch disc (1) (Fig. 209).

(15) Install the OD/UD clutch reaction plate (1) (Fig. 210). The OD/UD clutches reaction plate has a step on both sides. Install the OD/UD clutches reaction plate tapered step side up.

NOTE: Snap ring ends must be located within one finger of the input clutch hub. Be sure that snap ring is fully seated, by pushing with screwdriver, into snap ring groove all the way around.

INPUT CLUTCH ASSEMBLY (Continued)

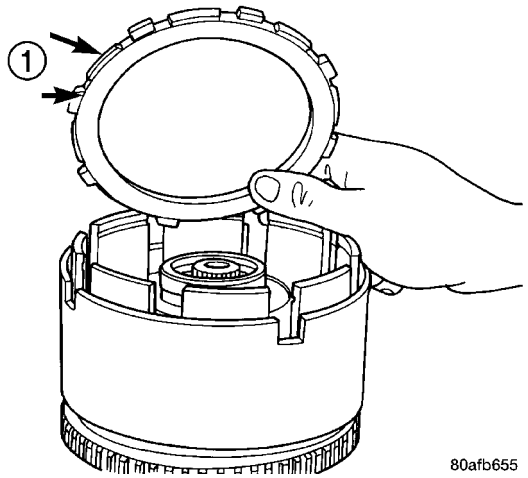

Fig. 210 OD/UD Reaction Plate

1 - OD/UD CLUTCH REACTION PLATE (STEP SIDE DOWN)

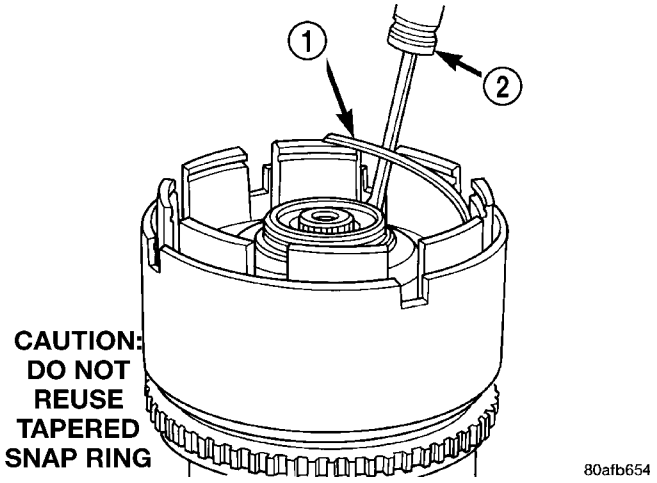

Fig. 211 Tapered Snap Ring

1 - OVERDRIVE/UNDERDRIVE CLUTCHES REACTION PLATE TAPERED SNAP RING
2 - SCREWDRIVER (DO NOT SCRATCH REACTION PLATE)

(16) Install the UD/OD tapered snap ring (1) (Fig. 211).

(17) Seat tapered snap ring (1) to ensure proper installation (Fig. 212).

(18) Install input clutch assembly (1) to the Input Clutch Pressure Fixture 8391 (2) (Fig. 213).

(19) Set up dial indicator (1) on the UD clutch pack (2) (Fig. 214).

(20) Using moderate pressure, press down and hold (near indicator) the UD clutch pack (2) with screwdriver or suitable tool and zero dial indicator (1) (Fig. 215). When releasing pressure on clutch pack, indicator reading should advance 0.005-0.010 inches.

CAUTION: Do not apply more than 30 psi (206 kPa) to the underdrive clutch pack.

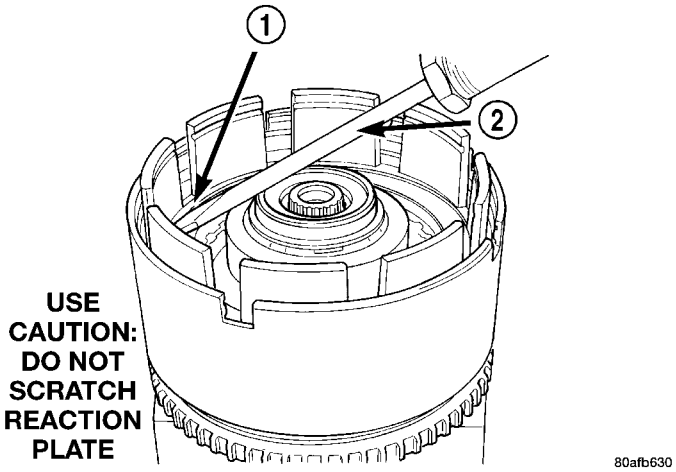

Fig. 212 Seating Tapered Snap Ring

1 - OVERDRIVE/UNDERDRIVE CLUTCHES REACTION PLATE TAPERED SNAP RING
2 - SCREWDRIVER

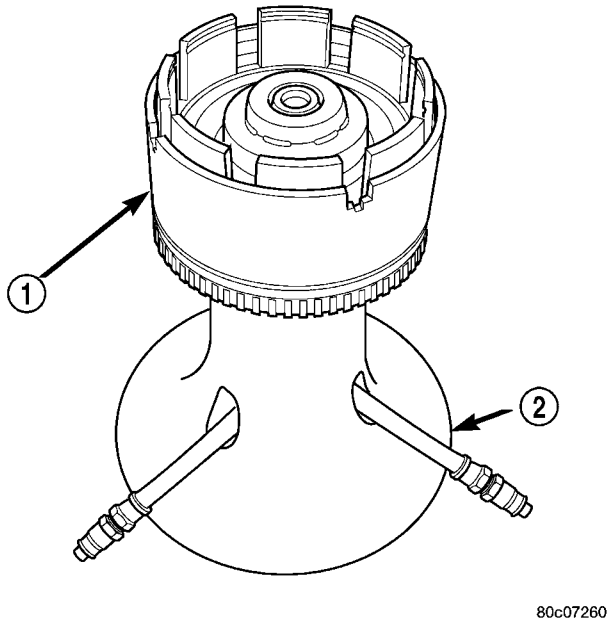

Fig. 213 Input Clutch Assembly on Pressure Fixture Tool - 8391

1 - INPUT CLUTCH ASSEMBLY
2 - INPUT CLUTCH PRESSURE FIXTURE - 8391

(21) Apply 30 psi (206 kPa) to the underdrive hose on Tool 8391 and measure UD clutch clearance. Measure and record UD clutch pack measurement in four (4) places, 90° apart.

(22) Take average of four measurements and compare with UD clutch pack clearance specification. **Underdrive clutch pack clearance must be 0.94-1.50 mm (0.037-0.059 in.).**

INPUT CLUTCH ASSEMBLY (Continued)

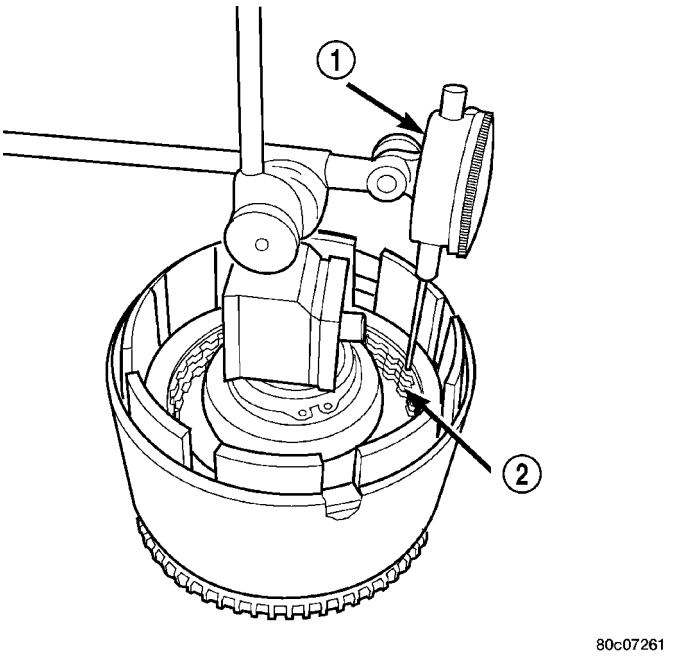

Fig. 214 Set Up Dial Indicator to Measure UD Clutch Clearance

1 - DIAL INDICATOR
2 - UNDERDRIVE CLUTCH

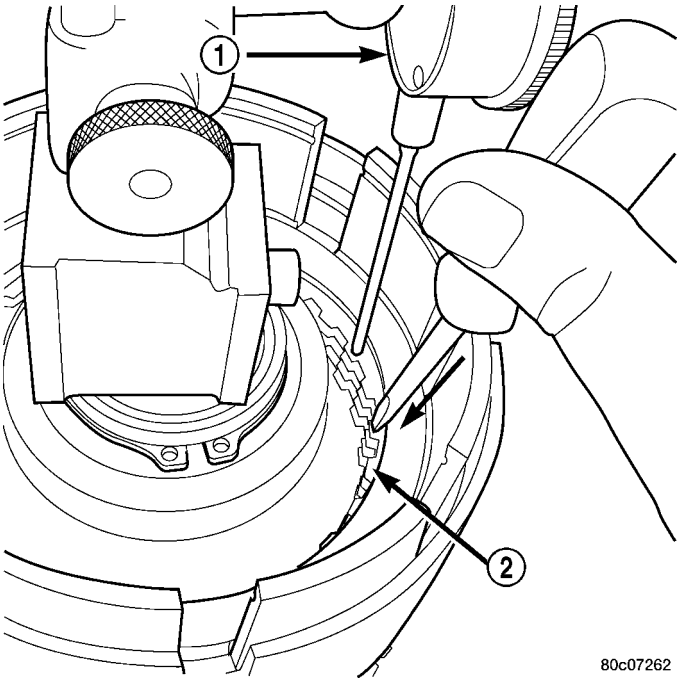

Fig. 215 Press Down on UD Clutch Pack and Zero Dial Indicator

1 - DIAL INDICATOR
2 - UNDERDRIVE CLUTCH

(23) If necessary, select the proper reaction plate to achieve specifications.

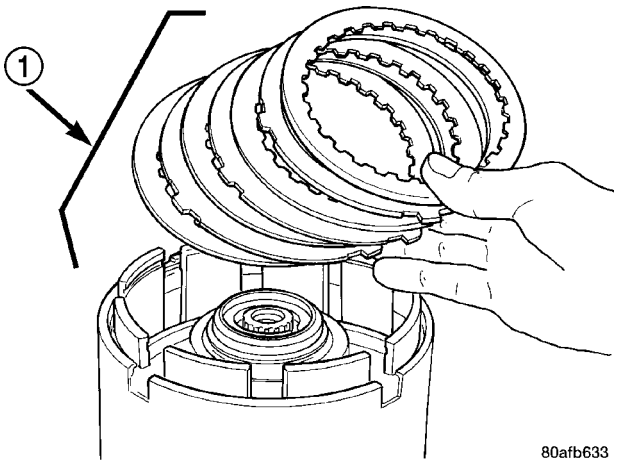

Fig. 216 Install OD Clutch Pack

1 - OVERDRIVE CLUTCH PACK

(24) Install the OD clutch pack (four fibers/three steels) (1) (Fig. 216).

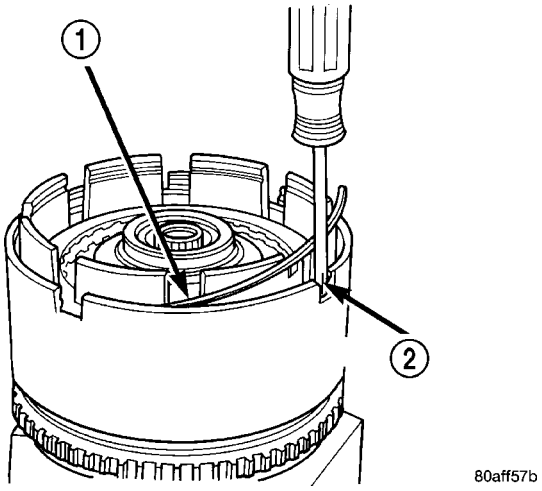

Fig. 217 Install Waved Snap Ring

1 - OVERDRIVE REACTION PLATE WAVED SNAP RING
2 - SCREWDRIVER

(25) Install OD reaction plate waved snap ring (1) (Fig. 217).

(26) Install the OD/Reverse reaction plate (1) with large step down (towards OD clutch pack) (Fig. 218).

(27) Install OD reaction plate flat snap ring (3) (Fig. 219).

(28) Measure OD clutch pack clearance. Set up dial indicator (1) on top of the OD/Reverse reaction plate (2) (Fig. 220).

(29) Zero dial indicator and apply 30 psi (206 kPa) air pressure to the overdrive clutch hose on Tool 8391. Measure and record OD clutch pack measurement in four (4) places, 90° apart.

INPUT CLUTCH ASSEMBLY (Continued)

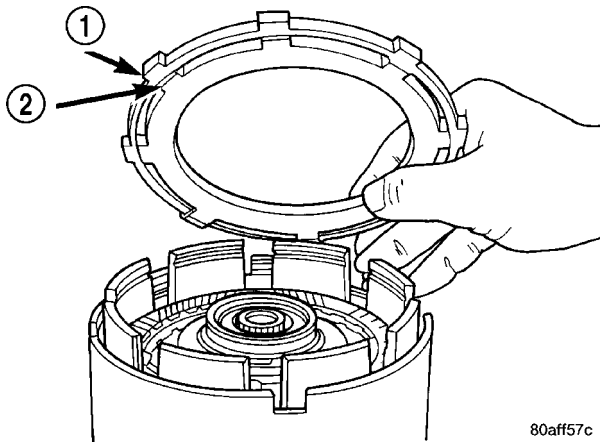

Fig. 218 OD/Reverse Reaction Plate

1 - OVERDRIVE/REVERSE PRESSURE PLATE
2 - (STEP SIDE DOWN)

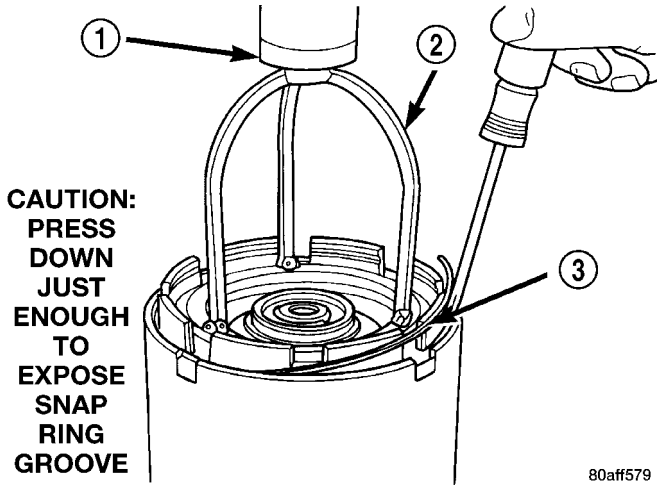

Fig. 219 Install Flat Snap Ring

1 - ARBOR PRESS RAM
2 - TOOL 5059A
3 - FLAT SNAP RING

(30) Take average of four measurements and compare with OD clutch pack clearance specification. **The overdrive (OD) clutch pack clearance is 1.07-3.25 mm (0.042-0.128 in.).**

If not within specifications, the clutch is not assembled properly. There is no adjustment for the OD clutch clearance.

(31) Install reverse clutch pack (two fibers/one steel) (1, 2) (Fig. 221).

(32) Install reverse clutch reaction plate (1) with the flat side down towards reverse clutch (Fig. 222).

(33) Tap reaction plate (3) down to allow installation of the reverse clutch snap ring (1). Install reverse clutch snap ring (1) (Fig. 223).

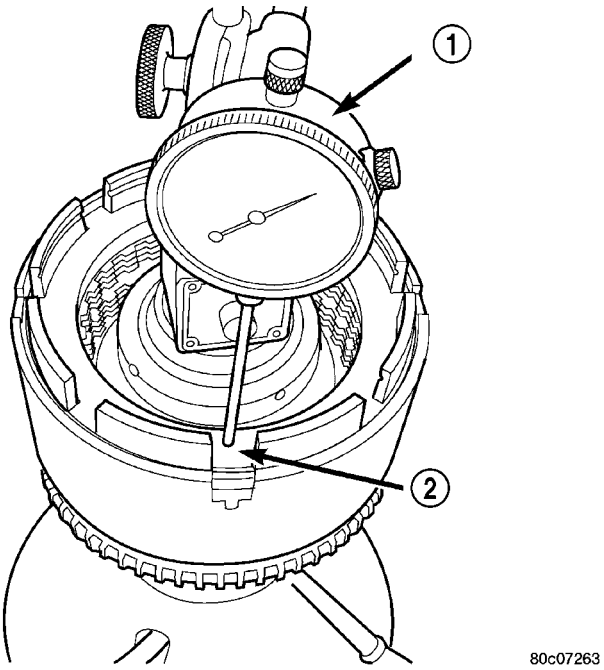

Fig. 220 Measure OD Clutch Pack Clearance

1 - DIAL INDICATOR
2 - OD/REVERSE PRESSURE PLATE

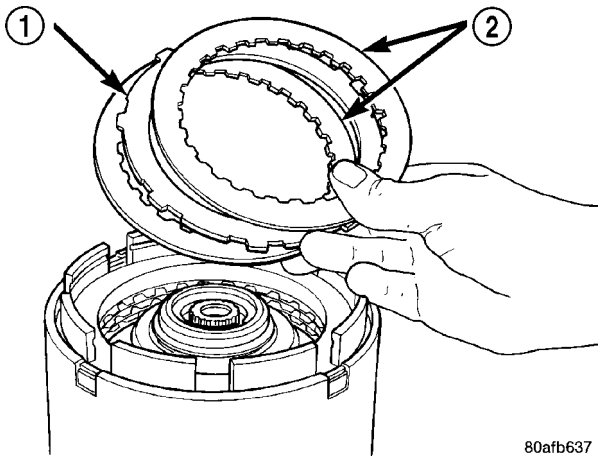

Fig. 221 Install Reverse Clutch Pack

1 - REVERSE CLUTCH PLATE
2 - REVERSE CLUTCH DISCS

(34) Pry up reverse reaction plate (4) to seat against snap ring (2) (Fig. 224).

(35) Set up a dial indicator (1) on the reverse clutch pack (2) (Fig. 225).

INPUT CLUTCH ASSEMBLY (Continued)

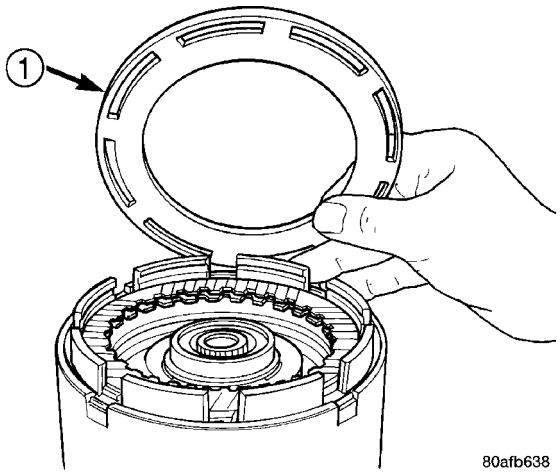

Fig. 222 Install Reaction Plate

1 - REVERSE CLUTCH REACTION PLATE (FLAT SIDE DOWN)

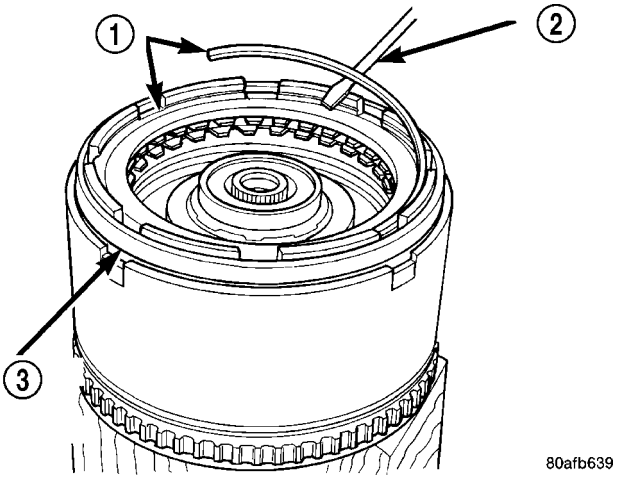

Fig. 223 Install Reverse Clutch Snap Ring

1 - REVERSE CLUTCH SNAP RING (SELECT)
2 - SCREWDRIVER
3 - REVERSE CLUTCH REACTION PLATE

(36) Using moderate pressure, press down and hold (near indicator) reverse clutch disc (2) with screwdriver or suitable tool and zero dial indicator (1) (Fig. 226). When releasing pressure, indicator should advance 0.005-0.010 inches as clutch pack relaxes.

(37) Apply 30 psi (206 kPa) air pressure to the reverse clutch hose on Tool 8391. Measure and record reverse clutch pack measurement in four (4) places, 90° apart.

(38) Take average of four measurements and compare with reverse clutch pack clearance specification. **The reverse clutch pack clearance is 0.89-1.37 mm (0.035-0.054 in.).** Select the proper reverse clutch snap ring to achieve specifications.

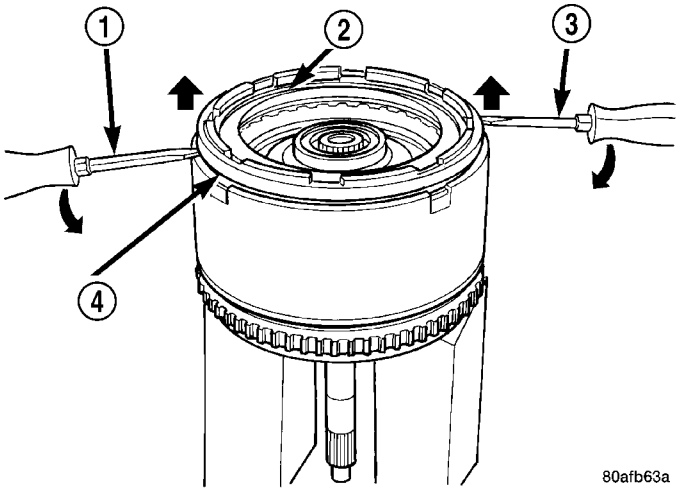

Fig. 224 Pry Up Reaction Plate

1 - SCREWDRIVER
2 - SNAP RING
3 - SCREWDRIVER
4 - MUST RAISE REVERSE REACTION PLATE TO RAISE SNAP RING

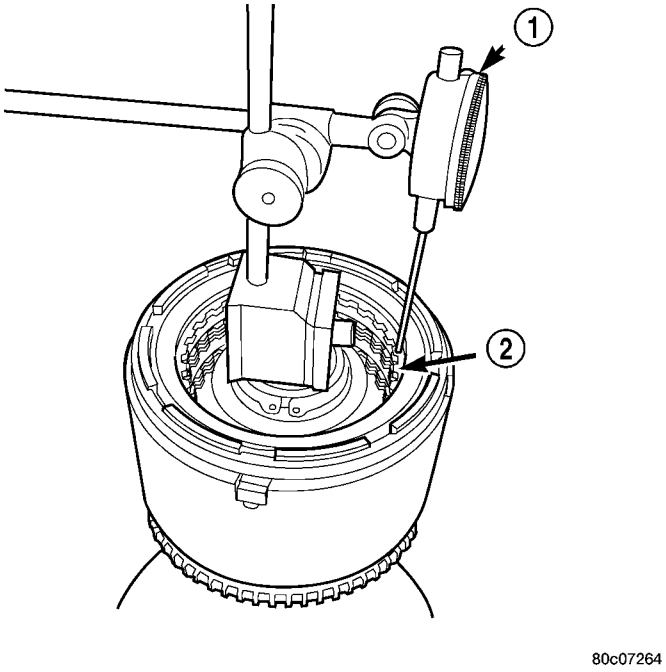

Fig. 225 Measure Reverse Clutch Pack Clearance

1 - DIAL INDICATOR
2 - REVERSE CLUTCH

INPUT CLUTCH ASSEMBLY (Continued)

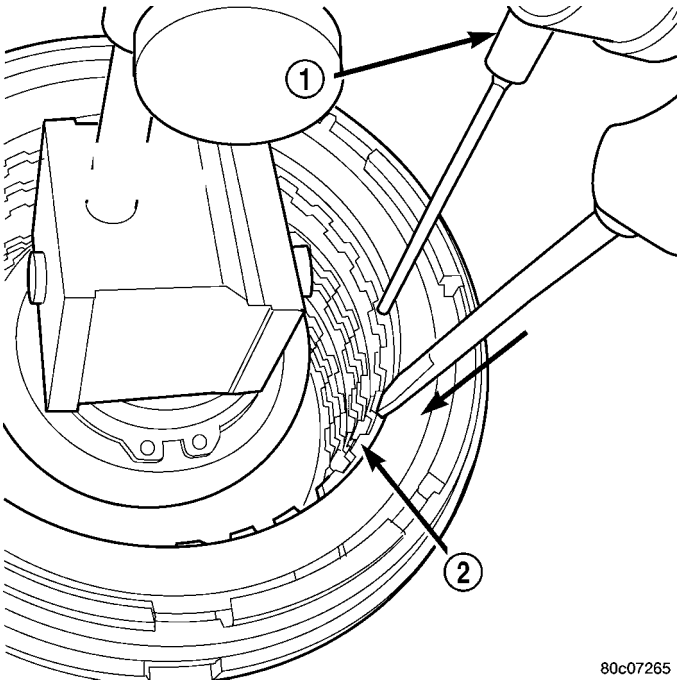

Fig. 226 Press Down on Reverse Clutch and Zero Indicator

1 - DIAL INDICATOR
2 - REVERSE CLUTCH

(39) To complete the assembly, reverse clutch and overdrive clutch must be removed.

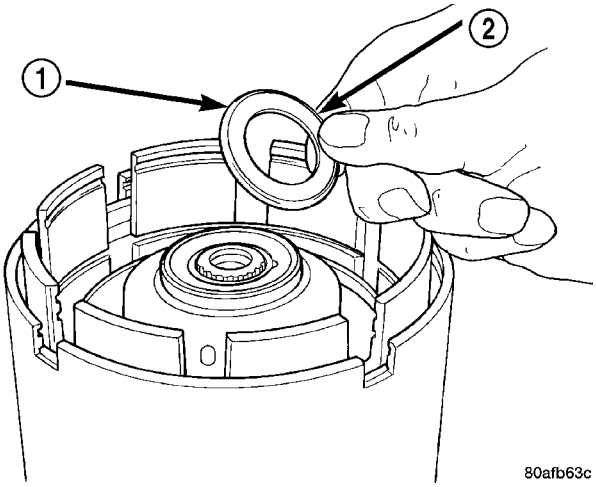

Fig. 227 Install No. 2 Needle Bearing

1 - #2 NEEDLE BEARING (NOTE 3 SMALL TABS)
2 - TABS UP

(40) Install the number 2 needle bearing (1) (Fig. 227).

(41) Install the underdrive shaft assembly (1) (Fig. 228).

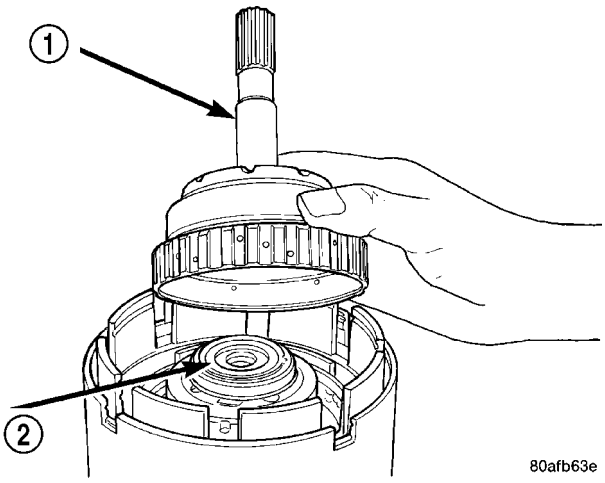

Fig. 228 Install Underdrive Shaft Assembly

1 - UNDERDRIVE SHAFT ASSEMBLY
2 - #2 NEEDLE BEARING

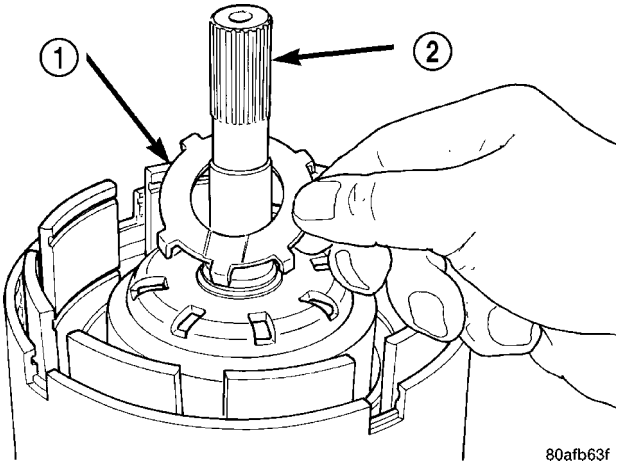

Fig. 229 Install No. 3 Thrust Washer

1 - #3 THRUST WASHER (NOTE 5 TABS)
2 - UNDERDRIVE SHAFT ASSEMBLY

(42) Install the number 3 thrust washer (1) (Fig. 229) to the underdrive shaft assembly (2). Be sure five tabs are seated properly.

(43) Install the number 3 thrust plate (3) to the bottom of the overdrive shaft assembly (1). Retain with petrolatum or transmission assembly gel (2) (Fig. 230).

(44) Install the overdrive shaft assembly (1) (Fig. 231).

INPUT CLUTCH ASSEMBLY (Continued)

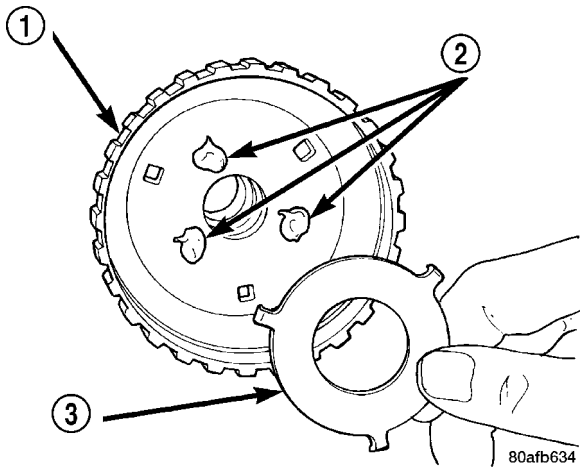

Fig. 230 Install No. 3 Thrust Plate

1 - OVERDRIVE SHAFT ASSEMBLY
2 - DABS OF PETROLATUM (FOR RETENTION)
3 - #3 THRUST PLATE (NOTE 3 TABS)

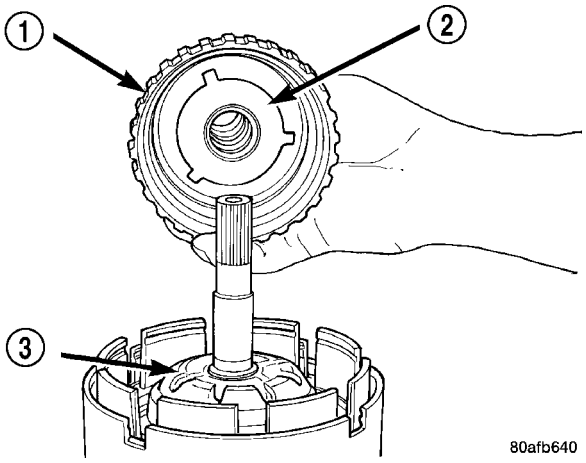

Fig. 231 Install Overdrive Shaft Assembly

1 - OVERDRIVE SHAFT ASSEMBLY
2 - #3 THRUST PLATE
3 - #3 THRUST WASHER

(45) Reinstall overdrive and reverse clutch (Fig. 232). **Rechecking these clutch clearances is not necessary.**

INPUT SPEED SENSOR

DESCRIPTION

The Input (1) and Output (2) Speed Sensors (Fig. 233) are two-wire magnetic pickup devices that generate AC signals as rotation occurs. They are mounted in the left side of the transmission case and are considered primary inputs to the Transmission Control Module (TCM).

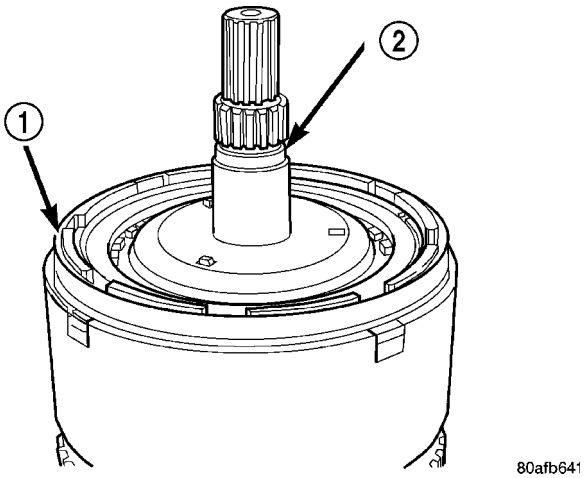

Fig. 232 Input Clutch Assembly

1 - INPUT CLUTCH ASSEMBLY
2 - OVERDRIVE SHAFT ASSEMBLY

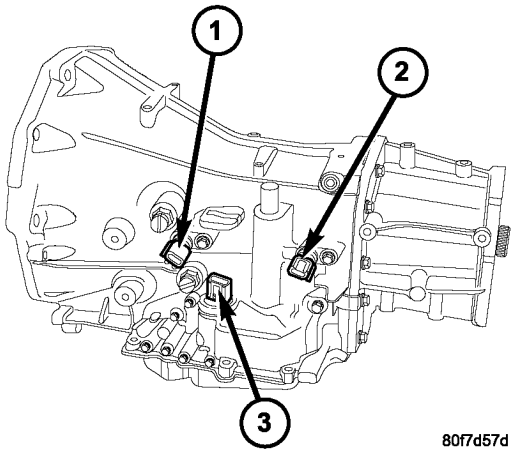

Fig. 233 Input and Output Speed Sensors and Transmission Range Sensor

1 - INPUT SPEED SENSOR
2 - OUTPUT SPEED SENSOR
3 - TRANSMISSION RANGE SENSOR

OPERATION

The Input Speed Sensor provides information on how fast the input shaft is rotating. As the teeth of the input clutch hub pass by the sensor coil, an AC voltage is generated and sent to the TCM. The TCM interprets this information as input shaft rpm.

The Output Speed Sensor generates an AC signal in a similar fashion, though its coil is excited by rotation of the rear planetary carrier lugs. The TCM interprets this information as output shaft rpm.

The TCM compares the input and output speed signals to determine the following:

- Transmission gear ratio
- Speed ratio error detection
- CVI calculation

INPUT SPEED SENSOR (Continued)

The TCM also compares the input speed signal and the engine speed signal to determine the following:

- Torque converter clutch slippage
- Torque converter element speed ratio

REMOVAL

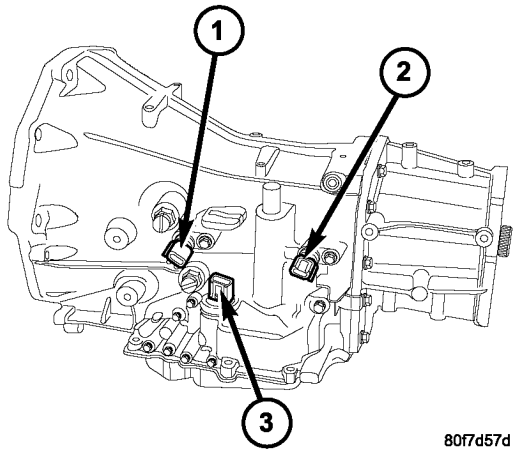

Fig. 234 Input Speed Sensor

1 - INPUT SPEED SENSOR
2 - OUTPUT SPEED SENSOR
3 - TRANSMISSION RANGE SENSOR

(1) Raise vehicle.

(2) Place a suitable fluid catch pan under the transmission.

(3) Remove the wiring connector from the input speed sensor (Fig. 234).

NOTE: The speed sensor bolt has a sealing patch applied from the factory. Be sure to reuse the same bolt.

(4) Remove the bolt holding the input speed sensor to the transmission case.

(5) Remove the input speed sensor from the transmission case.

INSTALLATION

(1) Install the input speed sensor (1) (Fig. 235)into the transmission case.

NOTE: Before installing the speed sensor bolt, it will be necessary to replentish the sealing patch on the bolt using Mopar® Lock & Seal Adhesive.

(2) Install the bolt to hold the input speed sensor into the transmission case. Tighten the bolt to 9 N·m (80 in.lbs.).

(3) Install the wiring connector onto the input speed sensor

(4) Verify the transmission fluid level. Add fluid as necessary.

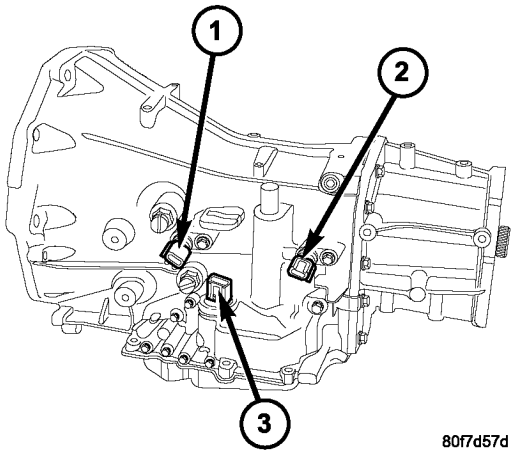

Fig. 235 Input Speed Sensor

1 - INPUT SPEED SENSOR
2 - OUTPUT SPEED SENSOR
3 - TRANSMISSION RANGE SENSOR

(5) Lower vehicle.

OIL PUMP

DESCRIPTION

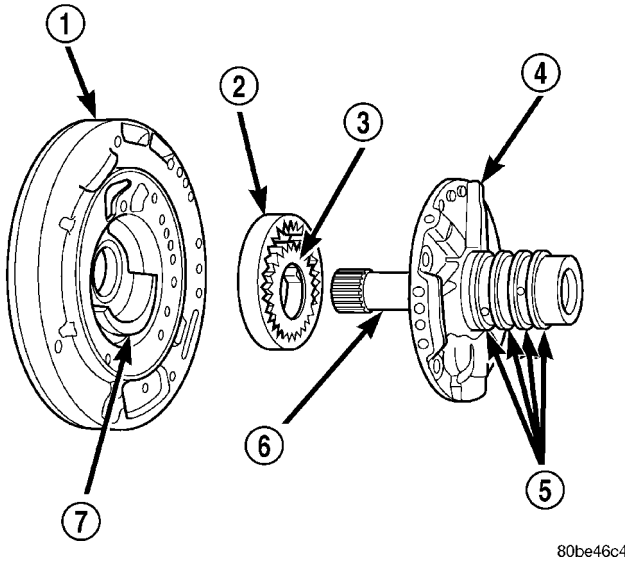

Fig. 236 Oil Pump Assembly

1 - PUMP HOUSING
2 - OUTER PUMP GEAR
3 - INNER PUMP GEAR
4 - REACTION SHAFT SUPPORT
5 - SEAL RINGS (4)
6 - REACTION SHAFT
7 - CRESCENT

The oil pump is located in the pump housing inside the bell housing of the transmission case. The oil pump assembly (Fig. 236) consists of an inner (3) and

OIL PUMP (Continued)

outer (2) gear, a housing (1), and a cover that also serves as the reaction shaft support (6).

OPERATION

As the torque converter rotates, the converter hub rotates the inner and outer gears. As the gears rotate, the clearance between the gear teeth increases in the crescent area, and creates a suction at the inlet side of the pump. This suction draws fluid through the pump inlet from the oil pan. As the clearance between the gear teeth in the crescent area decreases, it forces pressurized fluid into the pump outlet and to the valve body.

DISASSEMBLY

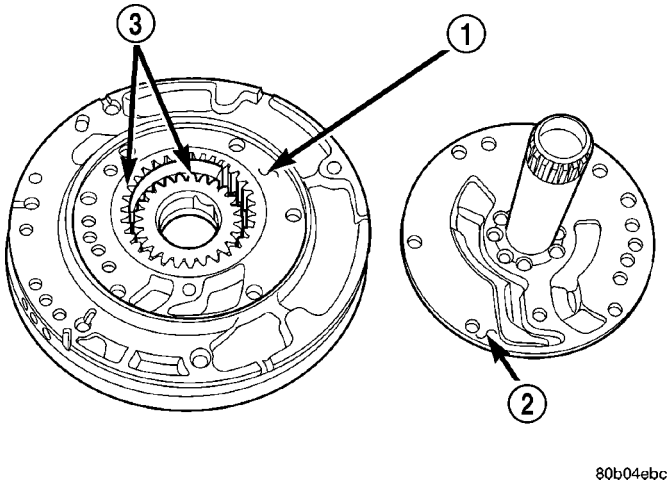

Fig. 237 Reaction Shaft Support

1 - PUMP HOUSING
2 - REACTION SHAFT SUPPORT
3 - PUMP GEARS

(1) Remove the reaction shaft support bolts.

(2) Remove the reaction shaft support(2) from the pump housing (1) (Fig. 237).

(3) Remove the pump gears (2, 3) (Fig. 238) and check for wear and damage on pump housing (1) and gears (2, 3).

(4) Re-install the gears and check clearances.

(5) Measure the clearance between the outer gear (1) and the pump pocket (2) (Fig. 239). Clearance should be 0.089-0.202 mm (0.0035-0.0079 in.).

(6) Measure clearance between outer gear and crescent. Clearance should be 0.060-0.298 mm (0.0023-0.0117 in.).

(7) Measure clearance between inner gear and crescent. Clearance should be 0.093-0.385 mm (0.0036-0.0151 in.).

(8) Position an appropriate piece of Plastigage across both pump gears.

(9) Align the Plastigage to a flat area on the reaction shaft support housing.

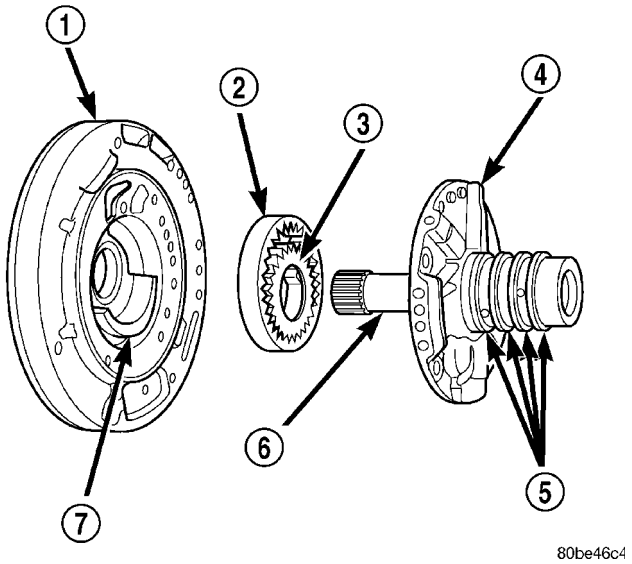

Fig. 238 Oil Pump Assembly

1 - PUMP HOUSING
2 - OUTER PUMP GEAR
3 - INNER PUMP GEAR
4 - REACTION SHAFT SUPPORT
5 - SEAL RINGS (4)
6 - REACTION SHAFT
7 - CRESCENT

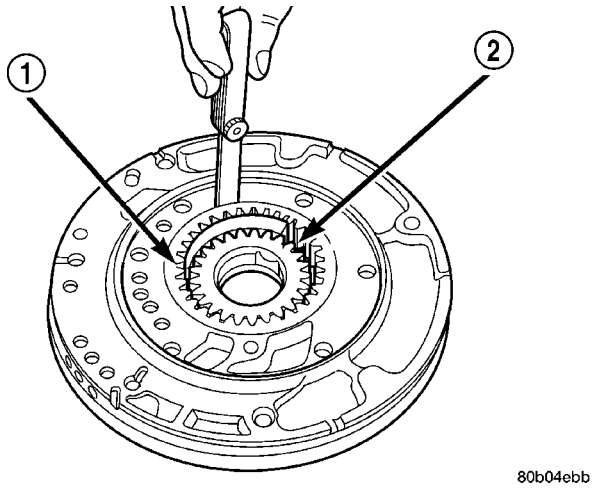

Fig. 239 Measure Outer Gear to Pocket

1 - OUTER GEAR
2 - POCKET

(10) Install the reaction shaft to the pump housing. Tighten the bolts to 27 N·m (20 ft. lbs.).

(11) Remove bolts and carefully separate the housings. Measure the Plastigage following the instructions supplied.

(12) Clearance between outer gear side and the reaction shaft support should be 0.020-0.046 mm (0.0008-0.0018 in.). Clearance between inner gear side and the reaction shaft support should be 0.020-0.046 mm (0.0008-0.0018 in.).

OIL PUMP (Continued)

ASSEMBLY

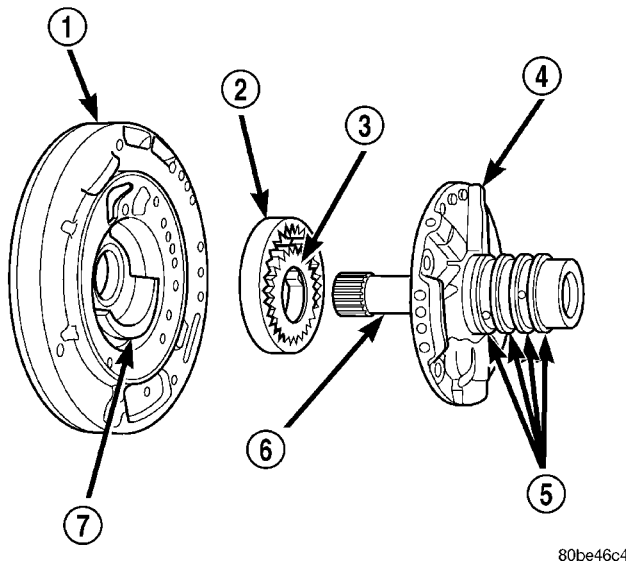

Fig. 240 Oil Pump Assembly

1 - PUMP HOUSING
2 - OUTER PUMP GEAR
3 - INNER PUMP GEAR
4 - REACTION SHAFT SUPPORT
5 - SEAL RINGS (4)
6 - REACTION SHAFT
7 - CRESCENT

(1) Assemble oil pump as shown (Fig. 240)

(2) Install and torque reaction shaft support-to-oil pump housing bolts to 28 N·m (20 ft. lbs.) torque.

OUTPUT SPEED SENSOR

DESCRIPTION

The Input (1) and Output (2) Speed Sensors (Fig. 241) are two-wire magnetic pickup devices that generate AC signals as rotation occurs. They are mounted in the left side of the transmission case and are considered primary inputs to the Transmission Control Module (TCM).

OPERATION

The Input Speed Sensor provides information on how fast the input shaft is rotating. As the teeth of the input clutch hub pass by the sensor coil, an AC voltage is generated and sent to the TCM. The TCM interprets this information as input shaft rpm.

The Output Speed Sensor generates an AC signal in a similar fashion, though its coil is excited by rotation of the rear planetary carrier lugs. The TCM interprets this information as output shaft rpm.

The TCM compares the input and output speed signals to determine the following:

- Transmission gear ratio

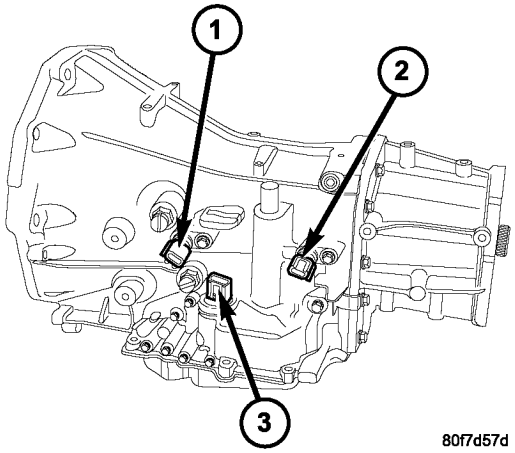

Fig. 241 Input and Output Speed Sensors and Transmission Range Sensor

1 - INPUT SPEED SENSOR
2 - OUTPUT SPEED SENSOR
3 - TRANSMISSION RANGE SENSOR

- Speed ratio error detection
- CVI calculation

The TCM also compares the input speed signal and the engine speed signal to determine the following:

- Torque converter clutch slippage
- Torque converter element speed ratio

REMOVAL

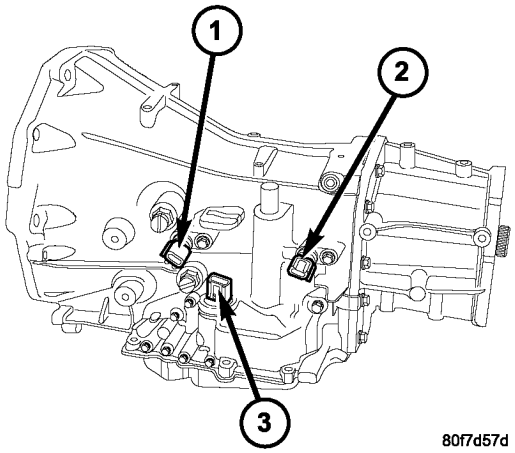

Fig. 242 Input and Output Speed Sensors and Transmission Range Sensor

1 - INPUT SPEED SENSOR
2 - OUTPUT SPEED SENSOR
3 - TRANSMISSION RANGE SENSOR

(1) Raise vehicle.

(2) Place a suitable fluid catch pan under the transmission.

(3) Remove the wiring connector from the output speed sensor (2) (Fig. 242).

OUTPUT SPEED SENSOR (Continued)

NOTE: The speed sensor bolt has a sealing patch applied from the factory. Be sure to reuse the same bolt.

(4) Remove the bolt holding the output speed sensor to the transmission case.

(5) Remove the output speed sensor (2) from the transmission case.

INSTALLATION

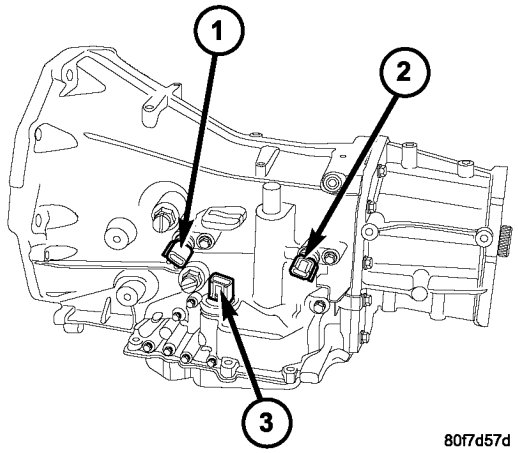

Fig. 243 Input and Output Speed Sensors and Transmission Range Sensor

1 - INPUT SPEED SENSOR
2 - OUTPUT SPEED SENSOR
3 - TRANSMISSION RANGE SENSOR

(1) Install the output speed sensor (2) (Fig. 243) into the transmission case.

NOTE: Before installing the speed sensor bolt, it will be necessary to replentish the sealing patch on the bolt using Mopar® Lock & Seal Adhesive.

(2) Install the bolt to hold the output speed sensor into the transmission case. Tighten the bolt to 9 N·m (80 in.lbs.).

(3) Install the wiring connector onto the output speed sensor

(4) Verify the transmission fluid level. Add fluid as necessary.

(5) Lower vehicle.

OVERDRIVE SWITCH

DESCRIPTION

The overdrive OFF (control) switch is located in the shifter handle. The switch is a momentary contact device that signals the PCM to toggle current status of the overdrive function.

OPERATION

At key-on, fourth gear operation is allowed. Pressing the switch once causes the overdrive OFF mode to be entered and the overdrive OFF switch lamp to be illuminated. Pressing the switch a second time causes normal overdrive operation to be restored and the overdrive lamp to be turned off. The overdrive OFF mode defaults to ON after the ignition switch is cycled OFF and ON. The normal position for the control switch is the ON position. The switch must be in this position to energize the solenoids and allow upshifts to fourth gear. The control switch indicator light illuminates only when the overdrive switch is turned to the OFF position, or when illuminated by the transmission control module.

PARK INTERLOCK CABLE

REMOVAL

(1) Lower the steering column.

(2) With the ignition switch in the “RUN” position depress the park-interlock cable locking tab, located on top of the cable connector (Fig. 244) at the steering column and pull the cable straight out.

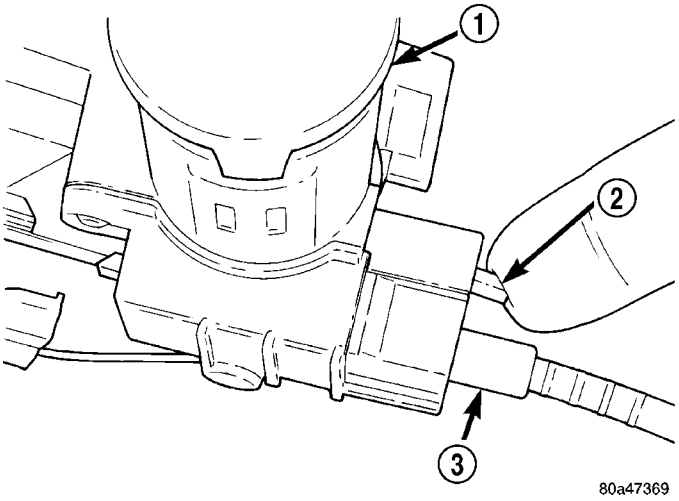

Fig. 244 Park-Interlock Cable

1 - IGNITION LOCK
2 - LOCK TAB
3 - CABLE END

(3) Remove the park-interlock cable from steering column.

(4) Remove the floor console and related trim. (Refer to 23 - BODY/INTERIOR/FLOOR CONSOLE - REMOVAL)

PARK INTERLOCK CABLE (Continued)

(5) Disconnect the park-interlock cable from the shift lever assembly and remove the cable from the shifter assembly bracket (Fig. 245).

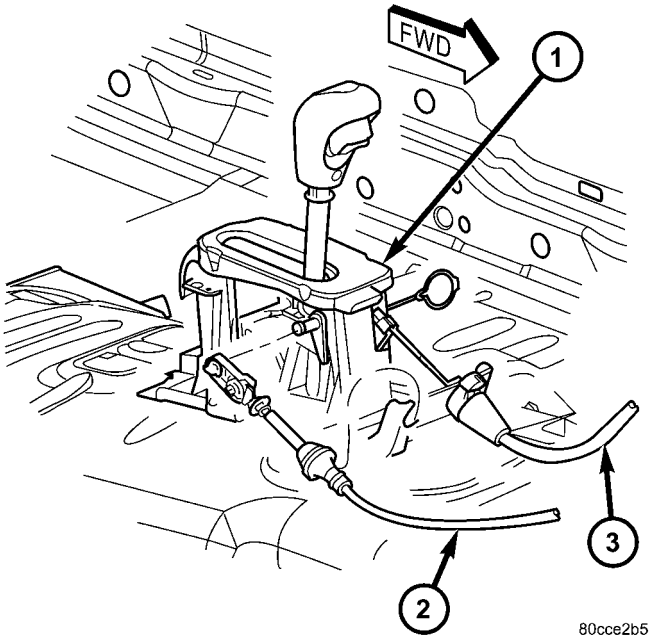

Fig. 245 Shift Cables At Shifter

1 - SHIFTER ASSEMBLY
2 - GEARSHIFT CABLE
3 - BTSI CABLE

(6) Release the park-interlock cable from any remaining clips.

(7) Remove park-interlock cable from the vehicle.

INSTALLATION

NOTE: The gearshift cable must be secured into position and properly adjusted before the installation of the Park-Interlock Cable.

(1) Push the park-interlock cable straight into the square mounting hole in the steering column until cable snaps in place (Fig. 246).

(2) Snap park-interlock cable tie strap into hole in steering column tube.

(3) Route cable to the shifter mechanism.

(4) Install the cable end fitting into shifter lever (Fig. 247).

(5) Snap cable adjuster ears into floor shifter bracket.

(6) Place the ignition key cylinder in the LOCK position.

(7) Push the cable adjuster lock clamp downward to lock it.

(8) Test the park-interlock cable operation.

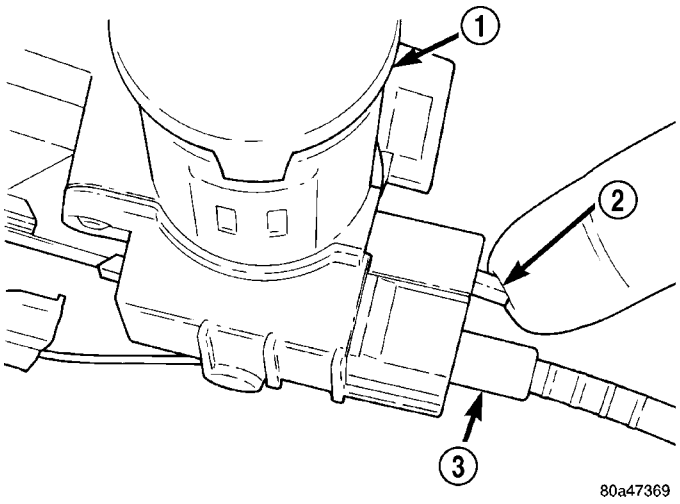

Fig. 246 Brake/Park Interlock Cable

1 - IGNITION LOCK
2 - LOCK TAB
3 - CABLE END

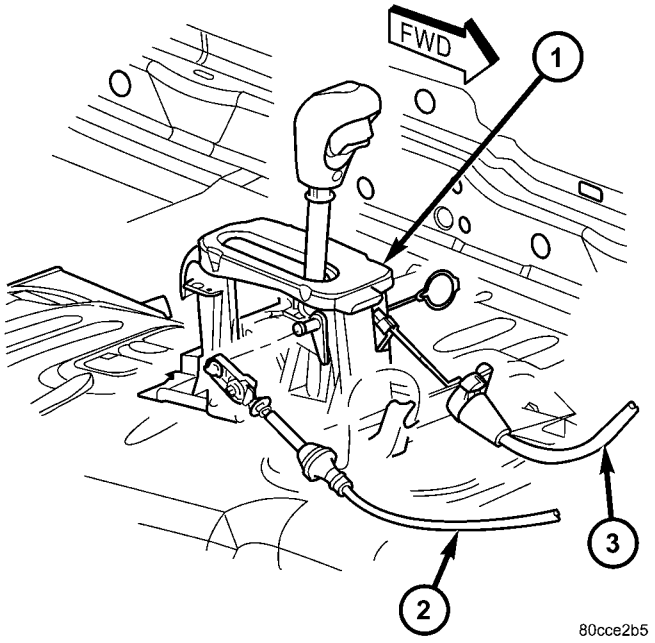

Fig. 247 Transmission Shift Cable At Shifter

1 - SHIFTER ASSEMBLY
2 - GEARSHIFT CABLE
3 - BTSI CABLE

(9) Install the floor console and related trim. (Refer to 23 - BODY/INTERIOR/FLOOR CONSOLE - INSTALLATION)

ADJUSTMENTS - PARK-INTERLOCK CABLE

The park-interlock cable is part of the Brake Transmission Shift Interlock (BTSI) system. Correct cable adjustment is important to proper interlock operation. The gear shift and park lock cables must

PARK INTERLOCK CABLE (Continued)

both be correctly adjusted in order to shift out of PARK.

(1) Remove floor console as necessary for access to the park-interlock cable. (Refer to 23 - BODY/INTERIOR/FLOOR CONSOLE - REMOVAL)

(2) Shift the transmission into the PARK position.

(3) Turn ignition switch to LOCK position. **Be sure ignition key cylinder is in the LOCK position. Cable will not adjust correctly in any other position.**

(4) Pull cable lock button up to release cable (Fig. 248).

(5) Ensure that the cable is free to self-adjust by pushing cable rearward and releasing.

(6) Push lock button down until it snaps in place.

(7) Verify proper operation. (Refer to 21 - TRANSMISSION/AUTOMATIC/SHIFT INTERLOCK SYSTEM - DIAGNOSIS AND TESTING)

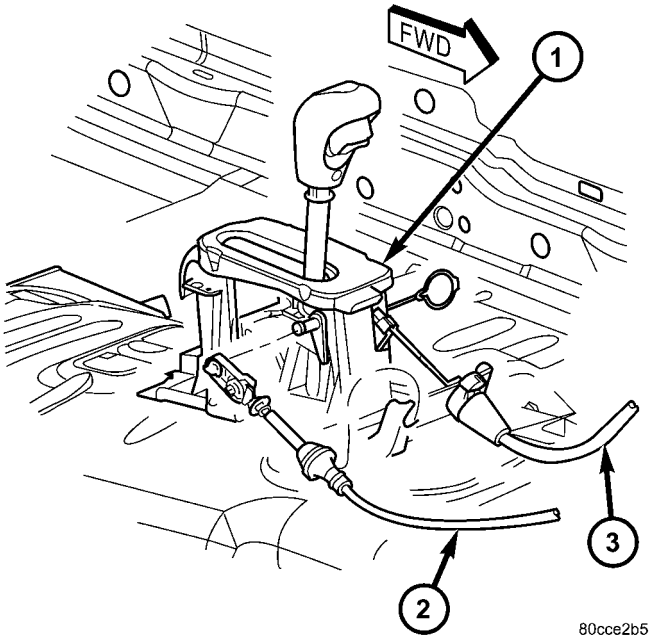

Fig. 248 Shift Cables At Shifter

1 - SHIFTER ASSEMBLY
2 - GEARSHIFT CABLE
3 - BTSI CABLE

PLANETARY GEARTRAIN

DESCRIPTION

The planetary geartrain is located between the input clutch assembly and the rear of the transmission case. The planetary geartrain consists of two sun gears, two planetary carriers, two annulus (ring) gears, and one output shaft (Fig. 249).

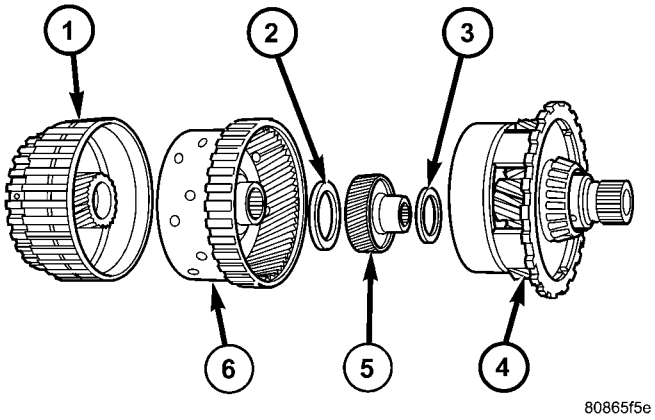

Fig. 249 Planetary Geartrain

1 - FRONT SUN GEAR ASSEMBLY
2 - #6 THRUST BEARING
3 - #7 THRUST BEARING
4 - REAR CARRIER FRONT ANNULUS ASSEMBLY
5 - REAR SUN GEAR
6 - FRONT CARRIER REAR ANNULUS ASSEMBLY

OPERATION

The planetary geartrain utilizes two planetary gear sets that connect the transmission input shaft to the output shaft. Input and holding clutches drive or lock different planetary members to change output ratio or direction.

OIL PUMP SEAL

REMOVAL

(1) Remove the transmission from the vehicle (Refer to 21 - TRANSMISSION/AUTOMATIC - 42RLE - REMOVAL).

(2) Remove the torque converter from the transmission bellhousing.

(3) Use special tool C-3981B to remove oil pump seal.

INSTALLATION

(1) Clean and inspect oil pump seal seat. Then install seal using special tool C-4193-A.

(2) Clean and inspect torque converter hub. If nicks, scratches or hub wear are found, torque converter replacement will be required.

CAUTION: If the torque converter is being replaced, apply a light coating of grease to the crankshaft pilot hole. Also inspect the engine drive plate for cracks. If any cracks are found replace the drive plate. Do not attempt to repair a cracked drive plate. Always use new torque converter to drive plate bolts.

OIL PUMP SEAL (Continued)

(3) Apply a light film of transmission oil to the torque converter hub and oil seal lips. Then install torque converter into transmission. Be sure that the hub lugs mesh with the front pump lugs when installing.

(4) Reinstall the transmission into the vehicle. (Refer to 21 - TRANSMISSION/TRANSAXLE/AUTOMATIC - 42RLE - INSTALLATION)

SHIFT MECHANISM

DESCRIPTION

The gear shift mechanism provides six shift positions which are:

- Park (P)
- Reverse (R)
- Neutral (N)
- Drive (D)
- Manual second (2)
- Manual low (1)

OPERATION

MANUAL LOW (1) range provides first gear only. Overrun braking is also provided in this range. MANUAL SECOND (2) range provides first and second gear only.

DRIVE range provides FIRST, SECOND THIRD and OVERDRIVE FOURTH gear ranges. The shift into OVERDRIVE FOURTH gear range occurs only after the transmission has completed the shift into D THIRD gear range. No further movement of the shift mechanism is required to complete the 3-4 shift.

The FOURTH gear upshift occurs automatically when the overdrive selector switch is in the ON position. No upshift to FOURTH gear will occur if any of the following are true:

- The transmission fluid temperature is below 10° C (50° F) or above 121° C (250° F).
- The shift to THIRD is not yet complete.
- Vehicle speed is too low for the 3-4 shift to occur.

Upshifts into FOURTH will be delayed when the transmission fluid temperature is below 4.5° C (40° F) or above 115.5° C (240° F).

REMOVAL

(1) Remove any necessary console parts for access to shift lever assembly and shifter cables. (Refer to 23 - BODY/INTERIOR/FLOOR CONSOLE - REMOVAL)

(2) Shift transmission into PARK.

(3) Disconnect the transmission shift cable at shift lever and shifter assembly bracket (Fig. 250).

(4) Disconnect the park-interlock cable from the shifter lever and the shifter assembly bracket.

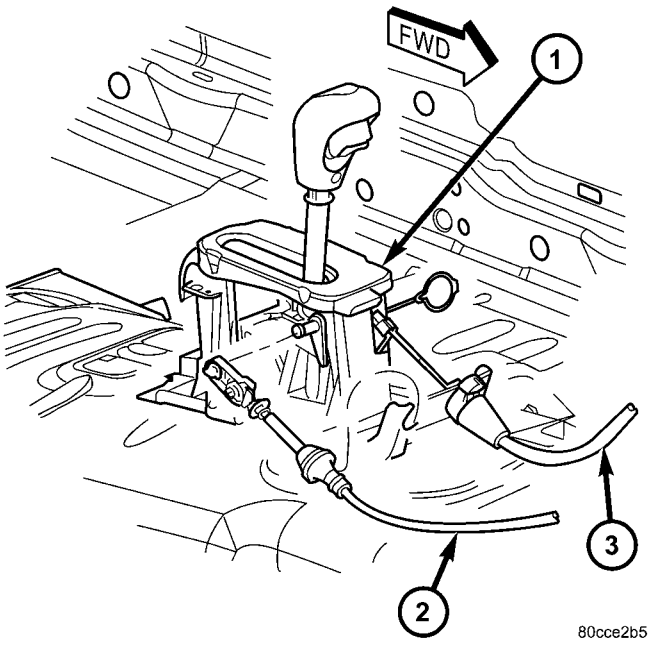

Fig. 250 Shift Cables At Shifter

1 - SHIFTER ASSEMBLY
2 - GEARSHIFT CABLE
3 - BTSI CABLE

(5) Disengage all wiring connectors from the shifter assembly.

(6) Remove all nuts holding the shifter assembly to the floor pan (Fig. 251).

(7) Remove the shifter assembly from the vehicle.

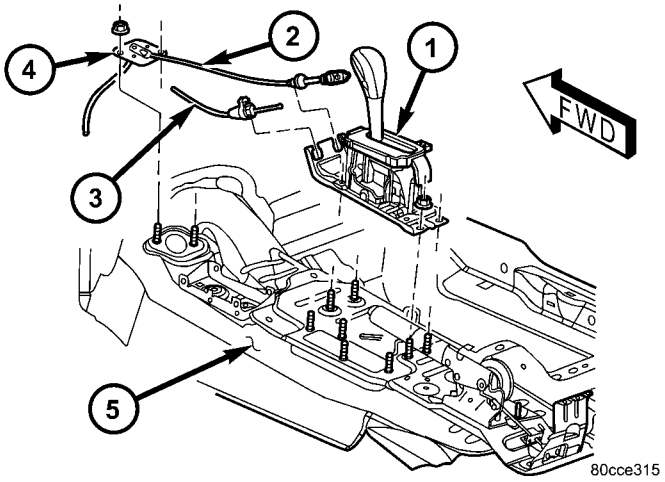

Fig. 251 Transmission Shifter Assembly

1 - SHIFTER ASSEMBLY
2 - GEARSHIFT CABLE
3 - PARK-INTERLOCK CABLE
4 - SHIFT CABLE SEAL PLATE
5 - FLOOR PAN

SHIFT MECHANISM (Continued)

INSTALLATION

(1) Install shifter assembly onto the shifter assembly studs on the floor pan.

(2) Install the nuts to hold the shifter assembly onto the floor pan. Tighten nuts to 28 N·m (250 in.lbs.).

(3) Install wiring harness to the shifter assembly bracket. Engage any wire connectors removed from the shifter assembly.

(4) Install the park-interlock cable into the shifter assembly bracket and into the shifter lever.

(5) Install the shift cable to the shifter assembly bracket. Push cable into the bracket until secure.

(6) Place the floor shifter lever in park position.

(7) Loosen the adjustment screw on the shift cable.

(8) Snap the shift cable onto the shift lever pin.

(9) Verify that the shift lever is in the PARK position.

(10) Tighten the adjustment screw to 7 N·m (65 in.lbs.).

(11) Verify correct shifter operation.

(12) Verify proper BTSI operation. (Refer to 21 - TRANSMISSION/AUTOMATIC/SHIFT INTERLOCK SYSTEM - DIAGNOSIS AND TESTING) Adjust the park-interlock cable as necessary. (Refer to 21 - TRANSMISSION/AUTOMATIC/SHIFT INTERLOCK CABLE - ADJUSTMENTS)

(13) Install any console parts removed for access to shift lever assembly and shift cables. (Refer to 23 - BODY/INTERIOR/FLOOR CONSOLE - INSTALLATION)

SOLENOID

DESCRIPTION

The typical electrical solenoid used in automotive applications is a linear actuator. It is a device that produces motion in a straight line. This straight line motion can be either forward or backward in direction, and short or long distance.

A solenoid is an electromechanical device that uses a magnetic force to perform work. It consists of a coil of wire, wrapped around a magnetic core made from steel or iron, and a spring loaded, movable plunger, which performs the work, or straight line motion.

The solenoids used in transmission applications are attached to valves which can be classified as **normally open (Fig. 252)** or **normally closed (Fig. 253).** The **normally open** solenoid valve is defined as a valve which allows hydraulic flow when no current or voltage is applied to the solenoid. The **normally closed** solenoid valve is defined as a valve which does not allow hydraulic flow when no current or voltage is applied to the solenoid. These valves perform hydraulic control functions for the transmission and must therefore be durable and tolerant of dirt particles. For these reasons, the valves have hardened steel poppets and ball valves. The solenoids operate the valves directly, which means that the solenoids must have very high outputs to close the valves against the sizable flow areas and line pressures found in current transmissions. Fast response time is also necessary to ensure accurate control of the transmission.

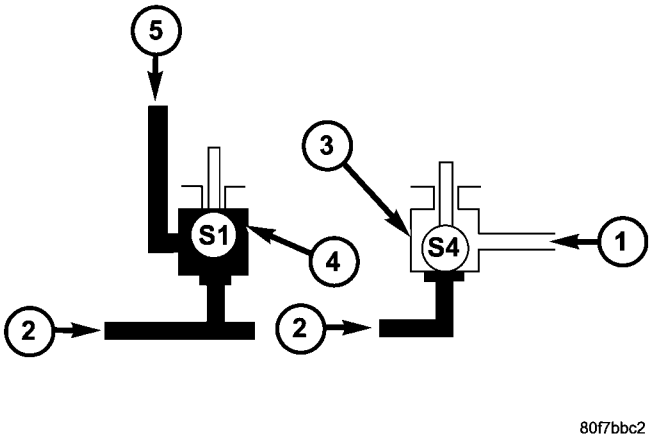

Fig. 252 2/4 - Low Reverse and Underdrive Solenoids

1 - MANUAL VALVE
2 - LINE PRESSURE
3 - 2/4 - LOW REVERSE SOLENOID ENERGIZED
4 - UNDERDRIVE SOLENOID DE-ENERGIZED
5 - UNDERDRIVE CLUTCH

The strength of the magnetic field is the primary force that determines the speed of operation in a particular solenoid design. A stronger magnetic field will cause the plunger to move at a greater speed than a weaker one. There are basically two ways to increase the force of the magnetic field:

1. Increase the amount of current applied to the coil or
2. Increase the number of turns of wire in the coil.

The most common practice is to increase the number of turns by using thin wire that can completely fill the available space within the solenoid housing. The strength of the spring and the length of the plunger also contribute to the response speed possible by a particular solenoid design.

A solenoid can also be described by the method by which it is controlled. Some of the possibilities include variable force, pulse-width modulated, constant ON, or duty cycle. The variable force and pulse-width modulated versions utilize similar methods to control the current flow through the solenoid to position the solenoid plunger at a desired position somewhere between full ON and full OFF. The constant ON and duty cycled versions control the voltage

SOLENOID (Continued)

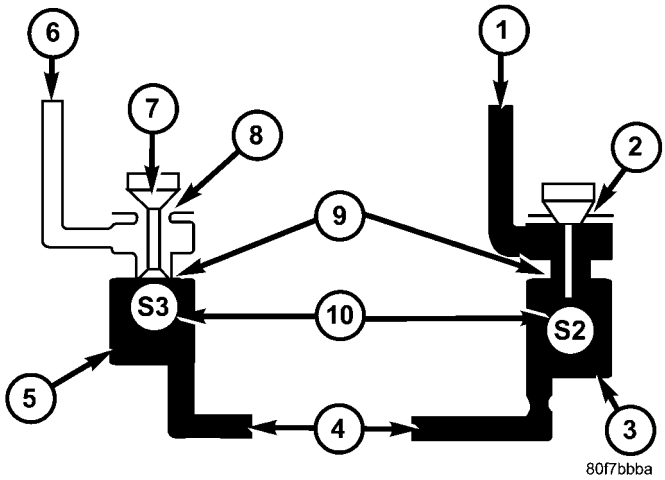

Fig. 253 Low Reverse/Converter Clutch and Overdrive Solenoids

1 - OVERDRIVE CLUTCH
2 - NO VENT
3 - OVERDRIVE SOLENOID ENERGIZED
4 - MANUAL VALVE
5 - LOW REVERSE/CONVERTER CLUTCH SOLENOID DE-ENERGIZED
6 - SOLENOID SWITCH VALVE
7 - TAPER
8 - VENT TO SUMP
9 - ORIFICE
10 - CHECK BALL

across the solenoid to allow either full flow or no flow through the solenoid's valve.

OPERATION

When an electrical current is applied to the solenoid coil, a magnetic field is created which produces an attraction to the plunger, causing the plunger to move and work against the spring pressure and the load applied by the fluid the valve is controlling. The plunger is normally directly attached to the valve which it is to operate. When the current is removed from the coil, the attraction is removed and the plunger will return to its original position due to spring pressure.

The plunger is made of a conductive material and accomplishes this movement by providing a path for the magnetic field to flow. By keeping the air gap between the plunger and the coil to the minimum necessary to allow free movement of the plunger, the magnetic field is maximized.

SOLENOID/PRESSURE SWITCH ASSY

DESCRIPTION

The Solenoid/Pressure Switch Assembly (1) (Fig. 254) is inside the transmission and mounted to the

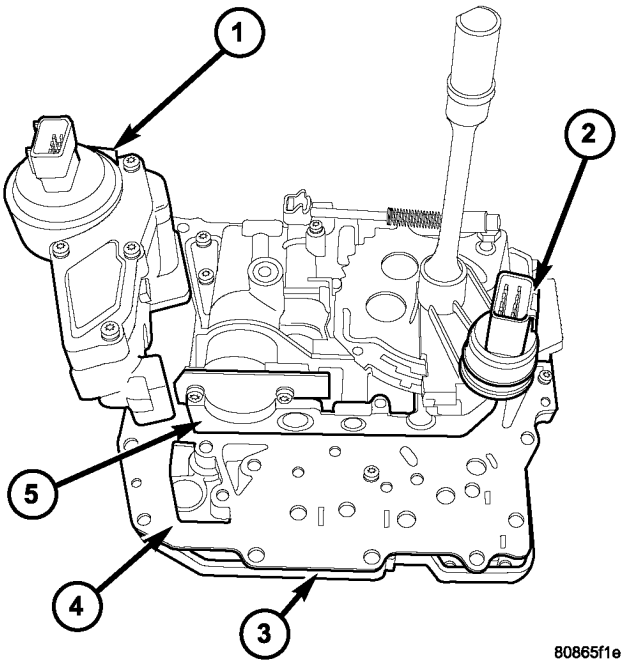

Fig. 254 Valve Body Assembly

1 - SOLENOID/PRESSURE SWITCH ASSEMBLY
2 - TRS
3 - TRANSFER PLATE
4 - SEPARATOR PLATE
5 - VALVE BODY

valve body assembly. The assembly consists of four solenoids that control hydraulic pressure to the L/R, 2/4, OD, and UD friction elements (transmission clutches), and the torque converter clutch. The reverse clutch is controlled by line pressure from the manual valve in the valve body. The solenoids are contained within the Solenoid/Pressure Switch Assembly, and can only be serviced by replacing the assembly.

The solenoid assembly also contains pressure switches that monitor and send hydraulic circuit information to the TCM. Likewise, the pressure switches can only be service by replacing the assembly.

OPERATION

SOLENOIDS

The solenoids receive electrical power from the Transmission Control Relay through a single wire. The TCM energizes or operates the solenoids individually by grounding the return wire of the solenoid needed. When a solenoid is energized, the solenoid valve shifts, and a fluid passage is opened or closed (vented or applied), depending on its default operating state. The result is an apply or release of a frictional element.

SOLENOID/PRESSURE SWITCH ASSY (Continued)

The 2/4 and UD solenoids are normally applied, which allows fluid to pass through in their relaxed or "off" state. By design, this allows transmission limp-in (P,R,N,2) in the event of an electrical failure.

The continuity of the solenoids and circuits are periodically tested. Each solenoid is turned on or off depending on its current state. An inductive spike should be detected by the TCM during this test. If no spike is detected, the circuit is tested again to verify the failure. In addition to the periodic testing, the solenoid circuits are tested if a speed ratio or pressure switch error occurs.

PRESSURE SWITCHES

The TCM relies on three pressure switches to monitor fluid pressure in the L/R, 2/4, and OD hydraulic circuits. The primary purpose of these switches is to help the TCM detect when clutch circuit hydraulic failures occur. The range for the pressure switch closing and opening points is 11-23 psi. Typically the switch opening point will be approximately one psi lower than the closing point. For example, a switch may close at 18 psi and open at 17 psi. The switches are continuously monitored by the TCM for the correct states (open or closed) in each gear as shown in the following chart:

PRESSURE SWITCH STATES

GEAR	L/R	2/4	OD
R	OP	OP	OP
P/N	CL	OP	OP
1st	CL	OP	OP
2nd	OP	CL	OP
D	OP	OP	CL
OD	OP	CL	CL

OP = OPEN

CL = CLOSED

A Diagnostic Trouble Code (DTC) will set if the TCM senses any switch open or closed at the wrong time in a given gear.

The TCM also tests the 2/4 and OD pressure switches when they are normally off (OD and 2/4 are tested in 1st gear, OD in 2nd gear, and 2/4 in 3rd gear). The test simply verifies that they are operational, by looking for a closed state when the corresponding element is applied. Immediately after a shift into 1st, 2nd, or 3rd gear with the engine speed above 1000 rpm, the TCM momentarily turns on element pressure to the 2/4 and/or OD clutch circuits to identify that the appropriate switch has closed. If it doesn't close, it is tested again. If the switch fails to close the second time, the appropriate Diagnostic Trouble Code (DTC) will set.

REMOVAL

NOTE: If the Solenoid/Pressure Switch Assembly is being replaced, the Quick Learn Procedure must be performed. (Refer to 8 - ELECTRICAL/ELECTRONIC CONTROL MODULES/TRANSMISSION CONTROL MODULE - STANDARD PROCEDURE)

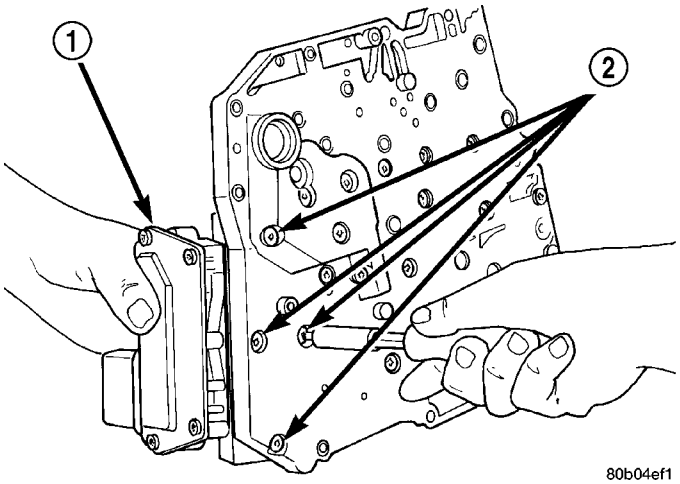

Fig. 255 Solenoid Retaining Screws

1 - SOLENOID/PRESSURE SWITCH ASSEMBLY
2 - RETAINING SCREWS

(1) Raise vehicle on hoist.

(2) Remove valve body assembly from transmission. (Refer to 21 - TRANSMISSION/AUTOMATIC - 42RLE/VALVE BODY - REMOVAL)

(3) Remove Solenoid/Pressure Switch Assembly retaining screws (2) from solenoid (Fig. 255).

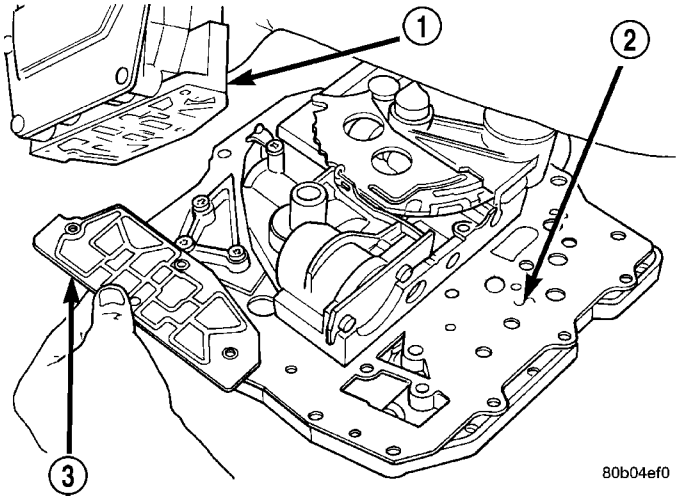

Fig. 256 Solenoid/Pressure Switch Assembly and Screen

1 - SOLENOID/PRESSURE SWITCH ASSEMBLY
2 - VALVE BODY
3 - SCREEN

SOLENOID/PRESSURE SWITCH ASSY (Continued)

(4) Remove Solenoid/Pressure Switch Assembly (1) and screen from valve body (2) (Fig. 256).

INSTALLATION

NOTE: If the Solenoid/Pressure Switch assembly is being replaced, the Quick Learn Procedure must be performed. (Refer to 8 - ELECTRICAL/ELECTRONIC CONTROL MODULES/TRANSMISSION CONTROL MODULE - STANDARD PROCEDURE)

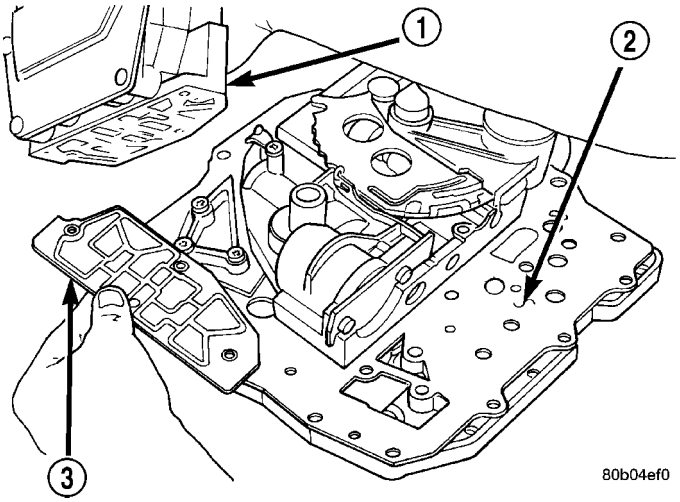

Fig. 257 Solenoid/Pressure Switch Assembly and Screen

1 - SOLENOID/PRESSURE SWITCH ASSEMBLY
2 - VALVE BODY
3 - SCREEN

(1) Install Solenoid/Pressure Switch Assembly (1) (Fig. 257) and screen (3) to the separator and transfer plates.

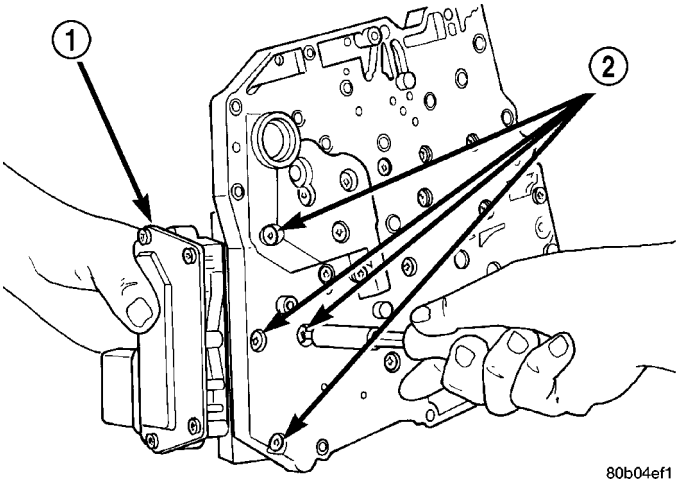

Fig. 258 Solenoid Retaining Screws

1 - SOLENOID/PRESSURE SWITCH ASSEMBLY
2 - RETAINING SCREWS

(2) Install and tighten retaining screws (2) (Fig. 258) to 5.5 N·m (50 in. lbs.) torque.

(3) Install valve body. (Refer to 21 - TRANSMISSION/AUTOMATIC - 42RLE/VALVE BODY - INSTALLATION)

TORQUE CONVERTER

DESCRIPTION

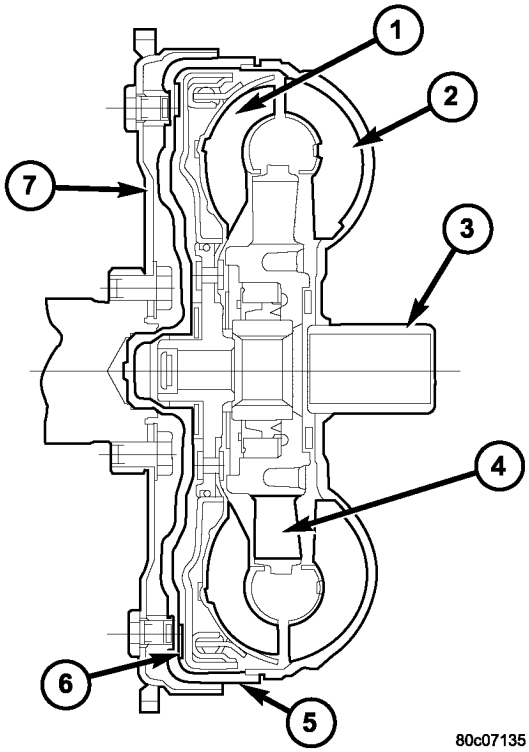

Fig. 259 Torque Converter Assembly

1 - TURBINE
2 - IMPELLER
3 - HUB
4 - STATOR
5 - FRONT COVER
6 - CONVERTER CLUTCH DISC
7 - DRIVE PLATE

The torque converter (Fig. 259) is a hydraulic device that couples the engine crankshaft to the transmission. The torque converter consists of an outer shell with an internal turbine, a stator, an overrunning clutch, an impeller and an electronically applied converter clutch. The converter clutch provides reduced engine speed and greater fuel economy when engaged. Clutch engagement also provides reduced transmission fluid temperatures. The torque converter hub drives the transmission oil (fluid) pump.

The torque converter is a sealed, welded unit that is not repairable and is serviced as an assembly.

TORQUE CONVERTER (Continued)

CAUTION: The torque converter must be replaced if a transmission failure resulted in large amounts of metal or fiber contamination in the fluid.

IMPELLER

The impeller (Fig. 260) is an integral part of the converter housing. The impeller consists of curved blades placed radially along the inside of the housing on the transmission side of the converter. As the converter housing is rotated by the engine, so is the impeller, because they are one and the same and are the driving members of the system.

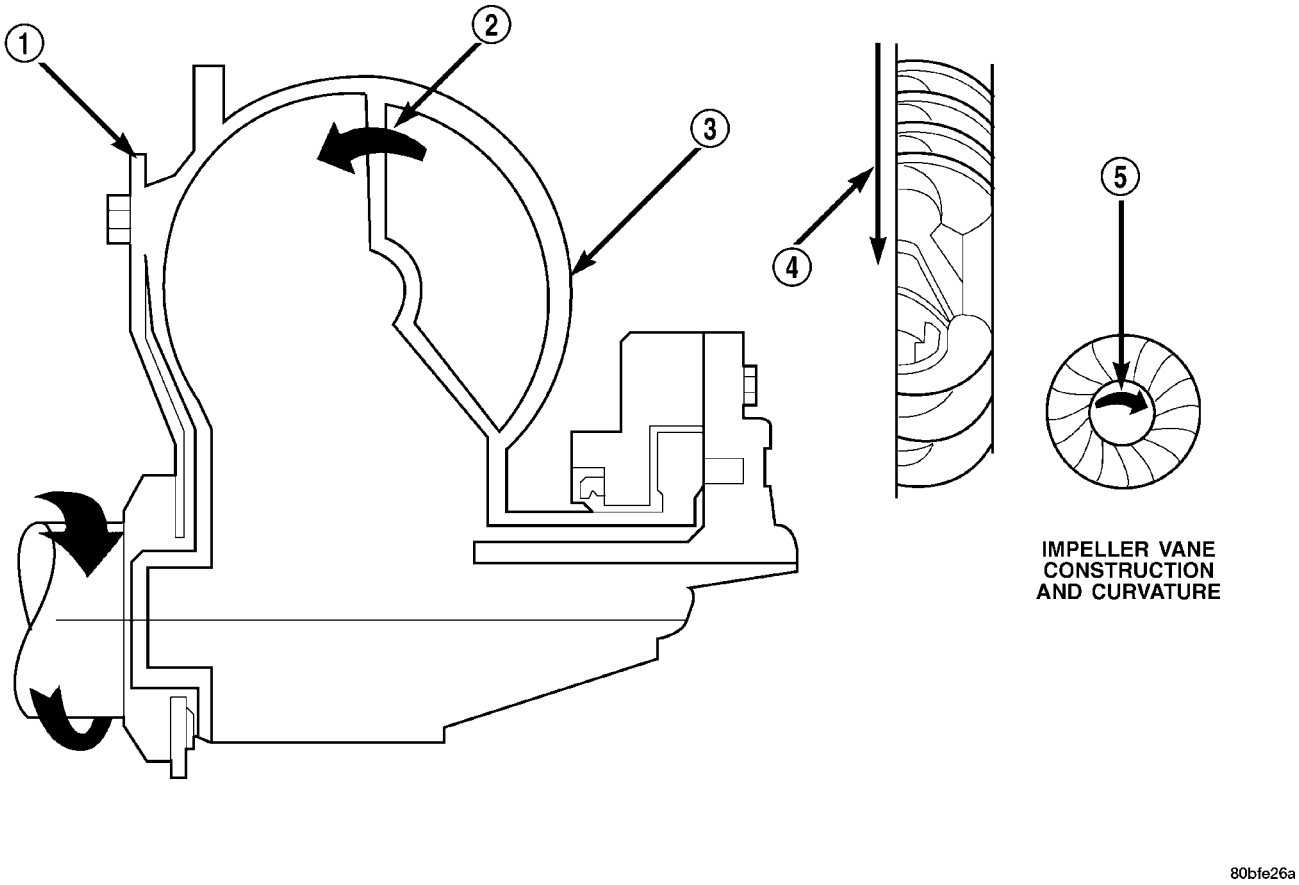

Fig. 260 Impeller

1 - ENGINE FLEXPLATE
2 - OIL FLOW FROM IMPELLER SECTION INTO TURBINE SECTION
3 - IMPELLER VANES AND COVER ARE INTEGRAL
4 - ENGINE ROTATION
5 - ENGINE ROTATION

TORQUE CONVERTER (Continued)

TURBINE

The turbine (Fig. 261) is the output, or driven, member of the converter. The turbine is mounted within the housing opposite the impeller, but is not attached to the housing. The input shaft is inserted through the center of the impeller and splined into the turbine. The design of the turbine is similar to the impeller, except the blades of the turbine are curved in the opposite direction.

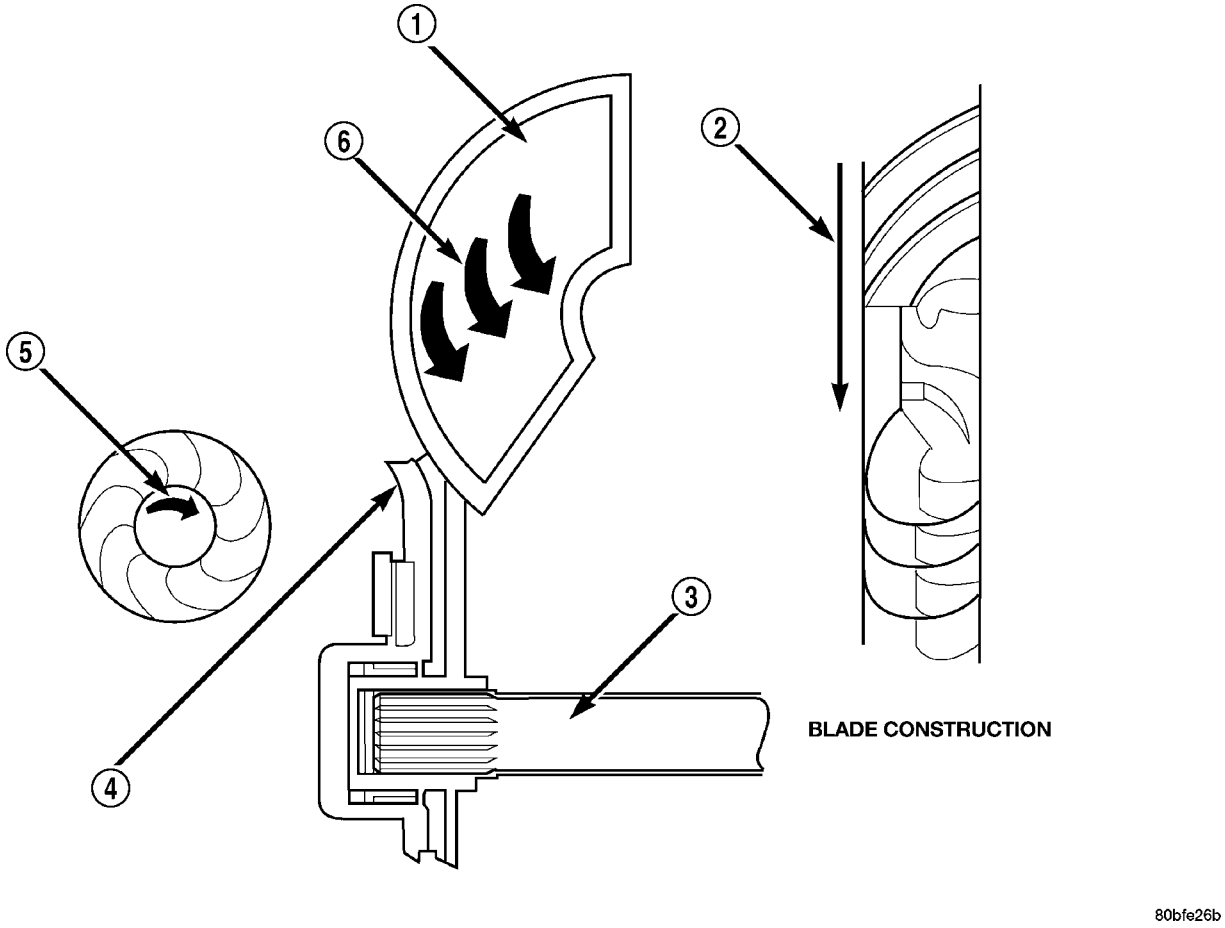

Fig. 261 Turbine

1 - TURBINE VANE
2 - ENGINE ROTATION
3 - INPUT SHAFT
4 - PORTION OF TORQUE CONVERTER COVER
5 - ENGINE ROTATION
6 - OIL FLOW WITHIN TURBINE SECTION

TORQUE CONVERTER (Continued)

STATOR

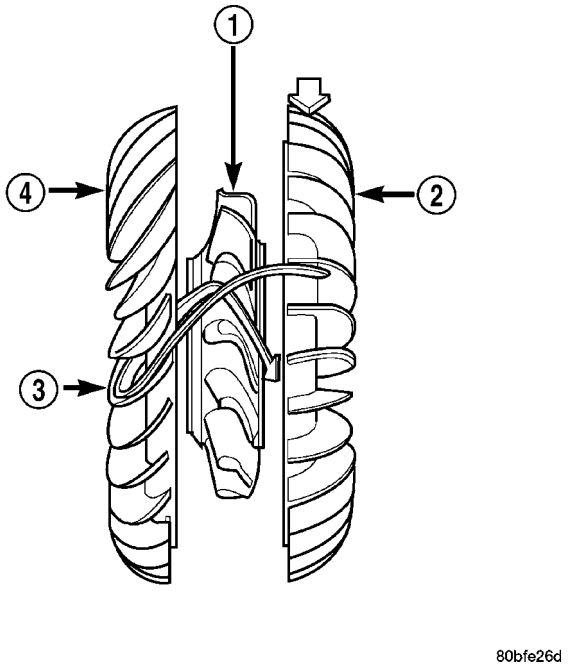

Fig. 262 Stator Location

1 - STATOR
2 - IMPELLER
3 - FLUID FLOW
4 - TURBINE

The stator assembly (Fig. 262) is mounted on a stationary shaft which is an integral part of the oil pump. The stator (1) is located between the impeller (2) and the turbine (4) within the torque converter case.

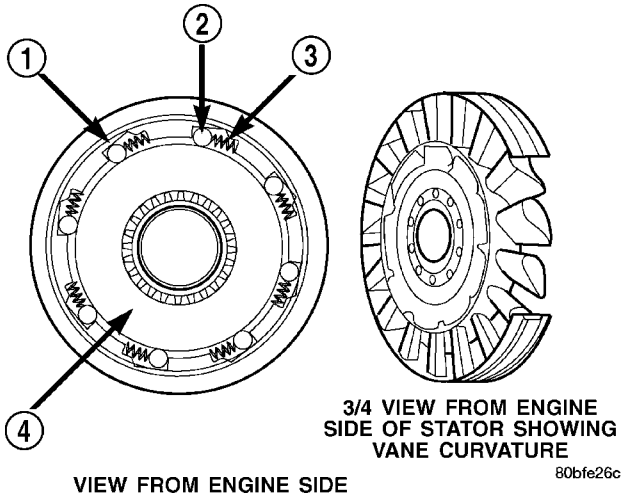

Fig. 263 Stator Components

1 - CAM (OUTER RACE)
2 - ROLLER
3 - SPRING
4 - INNER RACE

The stator contains an over-running clutch (1-4) (Fig. 263), which allows the stator to rotate only in a clockwise direction. When the stator is locked against the over-running clutch, the torque multiplication feature of the torque converter is operational.

TORQUE CONVERTER CLUTCH (TCC)

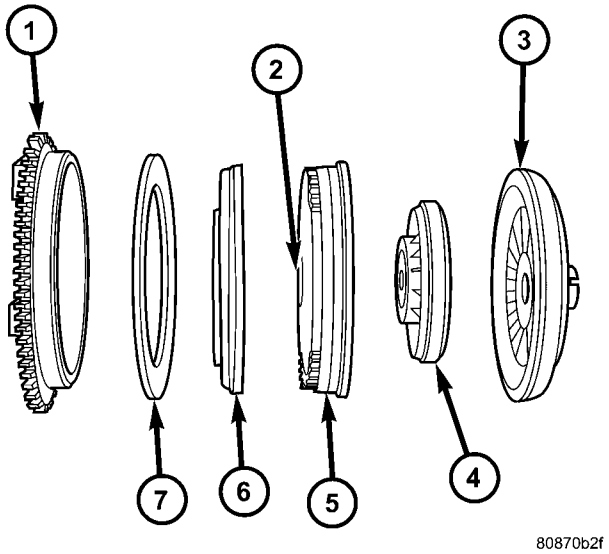

Fig. 264 Torque Converter Clutch (TCC)

1 - IMPELLER FRONT COVER
2 - THRUST WASHER ASSEMBLY
3 - IMPELLER
4 - STATOR
5 - TURBINE
6 - PISTON
7 - FRICTION DISC

The TCC (Fig. 264) was installed to improve the efficiency of the torque converter that is lost to the slippage of the fluid coupling. Although the fluid coupling provides smooth, shock-free power transfer, it is natural for all fluid couplings to slip. If the impeller (3) and turbine (5) were mechanically locked together, a zero slippage condition could be obtained. A hydraulic piston (6) with friction material (7) was added to the turbine assembly (5) to provide this mechanical lock-up.

In order to reduce heat build-up in the transmission and buffer the powertrain against torsional vibrations, the TCM can duty cycle the L/R-CC Solenoid to achieve a smooth application of the torque converter clutch. This function, referred to as Electronically Modulated Converter Clutch (EMCC) can occur at various times depending on the following variables:

- Shift lever position
- Current gear range
- Transmission fluid temperature
- Engine coolant temperature
- Input speed

TORQUE CONVERTER (Continued)

- Throttle angle
- Engine speed

OPERATION

The converter impeller (Fig. 265) (driving member), which is integral to the converter housing and bolted to the engine drive plate, rotates at engine speed. The converter turbine (driven member), which reacts from fluid pressure generated by the impeller, rotates and turns the transmission input shaft.

TURBINE

As the fluid that was put into motion by the impeller blades strikes the blades of the turbine, some of the energy and rotational force is transferred into the turbine and the input shaft. This causes both of them (turbine and input shaft) to rotate in a clockwise direction following the impeller. As the fluid is leaving the trailing edges of the turbine's blades it continues in a "hindering" direction back toward the impeller. If the fluid is not redirected before it strikes the impeller, it will strike the impeller in such a direction that it would tend to slow it down.

STATOR

Torque multiplication is achieved by locking the stator's over-running clutch to its shaft (Fig. 266). Under stall conditions (the turbine is stationary), the oil leaving the turbine blades strikes the face of the stator blades and tries to rotate them in a counter-clockwise direction. When this happens the overrunning clutch of the stator locks and holds the stator from rotating. With the stator locked, the oil strikes the stator blades and is redirected into a "helping" direction before it enters the impeller. This circulation of oil from impeller to turbine, turbine to stator, and stator to impeller, can produce a maximum torque multiplication of about 2.4:1. As the turbine begins to match the speed of the impeller, the fluid that was hitting the stator in such as way as to cause it to lock-up is no longer doing so. In this condition of operation, the stator begins to free wheel and the converter acts as a fluid coupling.

TORQUE CONVERTER CLUTCH (TCC)

The torque converter clutch is hydraulically applied and is released when fluid is vented from the hydraulic circuit by the torque converter control (TCC) solenoid on the valve body. The torque converter clutch is controlled by the Powertrain Control Module (PCM). The torque converter clutch engages in fourth gear, and in third gear under various conditions, such as when the O/D switch is OFF, when the vehicle is cruising on a level surface after the vehicle has warmed up. The torque converter clutch will disengage momentarily when an increase in

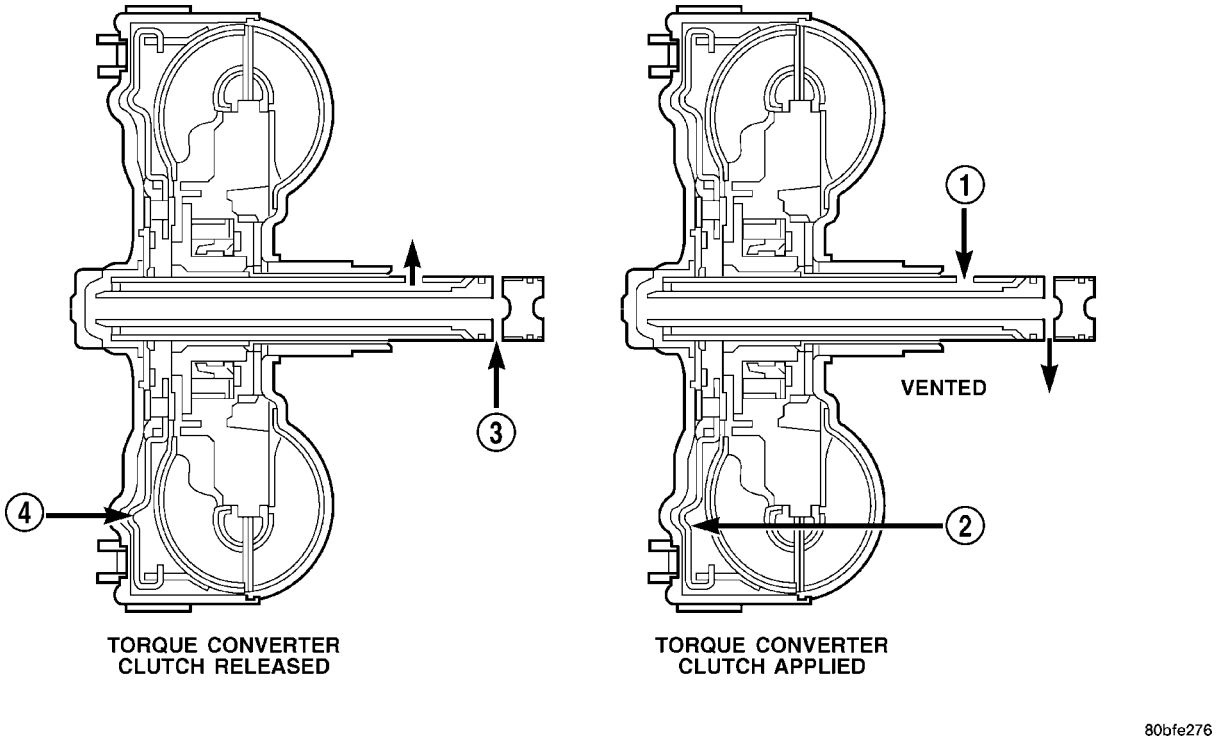

Fig. 265 Torque Converter Fluid Operation

1 - APPLY PRESSURE
2 - THE PISTON MOVES SLIGHTLY FORWARD
3 - RELEASE PRESSURE
4 - THE PISTON MOVES SLIGHTLY REARWARD

TORQUE CONVERTER (Continued)

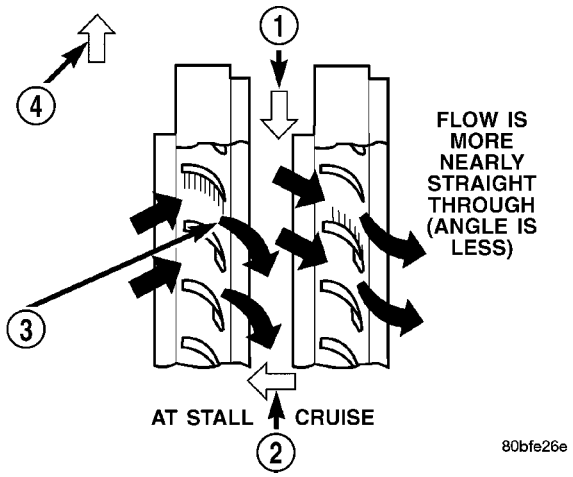

Fig. 266 Stator Operation

1 - DIRECTION STATOR WILL FREE WHEEL DUE TO OIL PUSHING ON BACKSIDE OF VANES
2 - FRONT OF ENGINE
3 - INCREASED ANGLE AS OIL STRIKES VANES
4 - DIRECTION STATOR IS LOCKED UP DUE TO OIL PUSHING AGAINST STATOR VANES

engine load is sensed by the PCM, such as when the vehicle begins to go uphill or the throttle pressure is increased.

REMOVAL

(1) Remove transmission and torque converter from vehicle. (Refer to 21 - TRANSMISSION/AUTOMATIC - 45RFE/545RFE - REMOVAL)

(2) Place a suitable drain pan under the converter housing end of the transmission.

CAUTION: Verify that transmission is secure on the lifting device or work surface, the center of gravity of the transmission will shift when the torque converter is removed creating an unstable condition. The torque converter is a heavy unit. Use caution when separating the torque converter from the transmission.

(3) Pull the torque converter forward until the center hub clears the oil pump seal.

(4) Separate the torque converter from the transmission.

INSTALLATION

NOTE: Check converter hub and drive notches for sharp edges, burrs, scratches, or nicks. Polish the hub and notches with 320/400 grit paper or crocus cloth if necessary. The hub must be smooth to avoid damaging the pump seal at installation.

(1) Lubricate oil pump seal lip with transmission fluid.

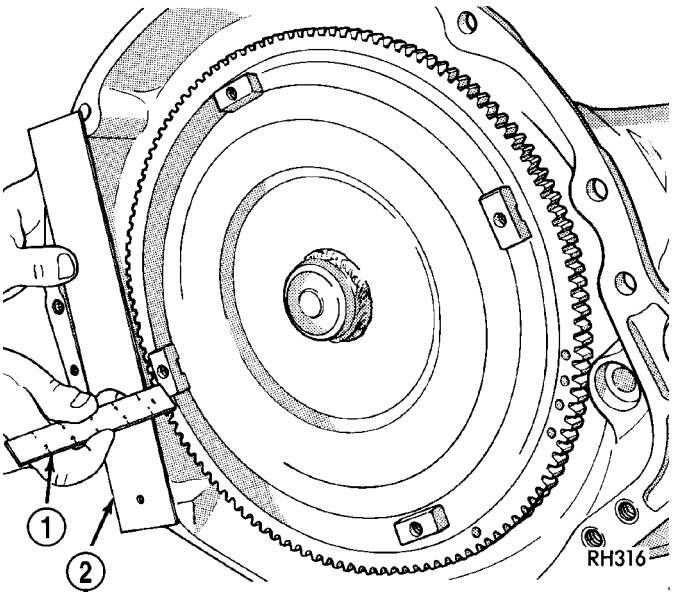

Fig. 267 Checking Torque Converter Seating - Typical

1 - SCALE
2 - STRAIGHTEDGE

(2) Place torque converter in position on transmission.

CAUTION: Do not damage oil pump seal or bushing while inserting torque converter into the front of the transmission.

(3) Align torque converter to oil pump seal opening.

(4) Insert torque converter hub into oil pump.

(5) While pushing torque converter inward, rotate converter until converter is fully seated in the oil pump gears.

(6) Check converter seating with a scale (1) and straightedge (2) (Fig. 267). Surface of converter lugs should be 1/2 in. to rear of straightedge when converter is fully seated.

(7) If necessary, temporarily secure converter with C-clamp attached to the converter housing.

(8) Install the transmission in the vehicle.

(9) Fill the transmission with the recommended fluid.

TRANSMISSION CONTROL RELAY

DESCRIPTION

The relay is supplied fused B+ voltage, energized by the TCM, and is used to supply power to the solenoid pack when the transmission is in normal operating mode.

TRANSMISSION CONTROL RELAY (Continued)

OPERATION

When the relay is “off”, no power is supplied to the solenoid pack and the transmission is in “limp-in” mode. After a controller reset, the TCM energizes the relay. Prior to this, the TCM verifies that the contacts are open by checking for no voltage at the switched battery terminals. After this is verified, the voltage at the solenoid pack pressure switches is checked. After the relay is energized, the TCM monitors the terminals to verify that the voltage is greater than 3 volts.

TRANSMISSION RANGE SENSOR

DESCRIPTION

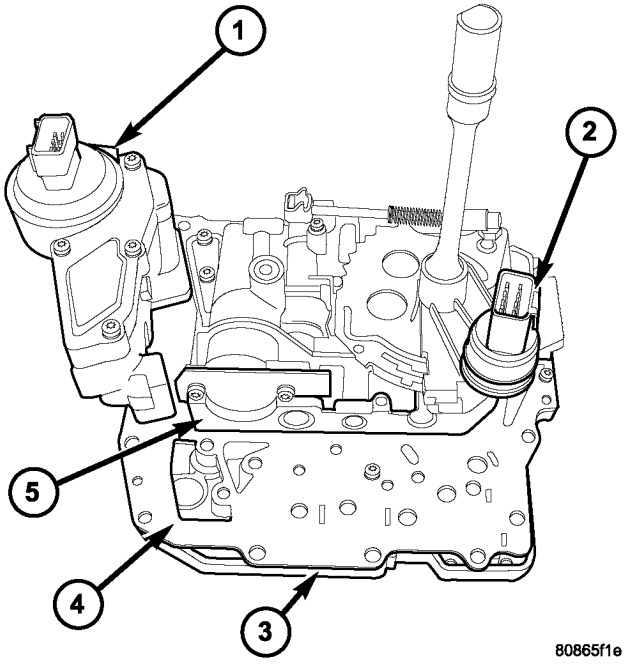

Fig. 268 Valve Body Assembly

1 - SOLENOID/PRESSURE SWITCH ASSEMBLY
2 - TRS
3 - TRANSFER PLATE
4 - SEPARATOR PLATE
5 - VALVE BODY

The Transmission Range Sensor (TRS) (2) (Fig. 268) is mounted to the top of the valve body inside the transmission and can only be serviced by removing the valve body assembly. The electrical connector extends through the transmission case.

The Transmission Range Sensor (TRS) has four switch contacts that monitor shift lever position and send the information to the PCM.

OPERATION

The Transmission Range Sensor (TRS) communicates shift lever position (SLP) to the TCM as a combination of open and closed switches. Each shift lever position has an assigned combination of switch states (open/closed) that the TCM receives from four sense circuits. The TCM interprets this information and determines the appropriate transmission gear position and shift schedule.

Since there are four switches, there are 16 possible combinations of open and closed switches (codes). Seven of these codes are related to gear position and three are recognized as “between gear” codes. This results in six codes which should never occur. These are called “invalid” codes. An invalid code will result in a DTC, and the TCM will then determine the shift lever position based on pressure switch data. This allows reasonably normal transmission operation with a TRS failure.

TRS SWITCH STATES

SLP	T42	T41	T3	T1
P	CL	CL	CL	OP
R	CL	OP	OP	OP
N	CL	CL	OP	CL
D	OP	OP	OP	CL
2	OP	OP	CL	OP
1	CL	OP	CL	CL

TRANSMISSION RANGE SENSOR (Continued)

REMOVAL

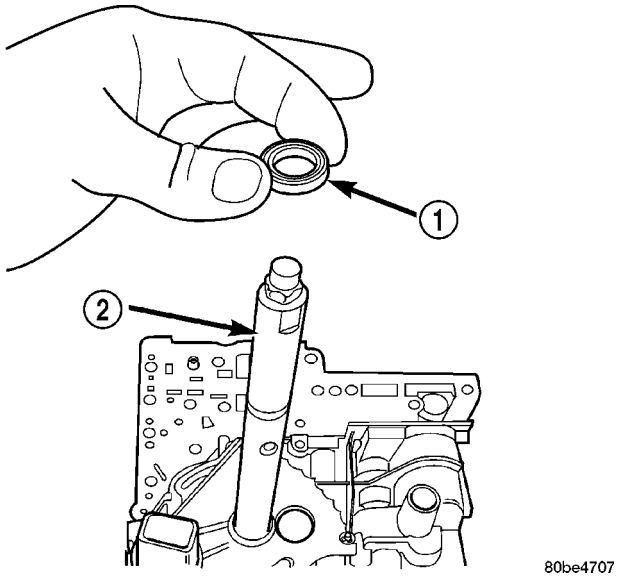

Fig. 269 Manual Shaft Seal - Typical

1 - SEAL
2 - MANUAL SHAFT

(1) Remove valve body assembly from vehicle. (Refer to 21 - TRANSMISSION/AUTOMATIC - 42RLE/VALVE BODY - REMOVAL)

(2) Remove the manual shaft seal (1) (Fig. 269).

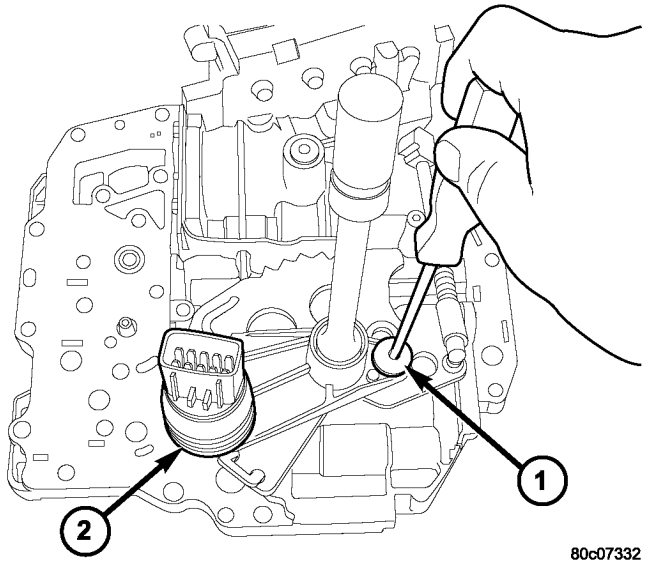

Fig. 270 Manual Shaft Retaining Screw

1 - SCREW
2 - TRS

(3) Remove manual shaft/TRS retaining screw (1) (Fig. 270).

(4) Slide TRS off of manual valve shaft.

INSTALLATION

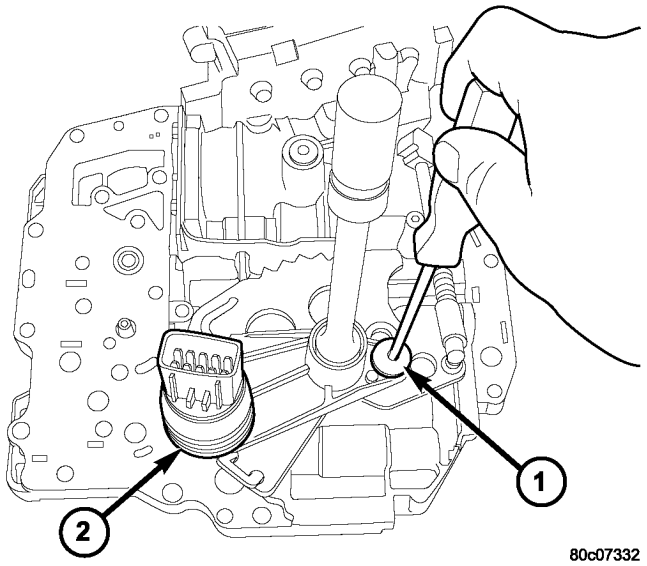

Fig. 271 Manual Shaft Retaining Screw

1 - SCREW
2 - TRS

(1) Install the TRS (2) to the manual shaft. Make sure TRS locating pin rests in manual valve bore slot.

(2) Install the TRS/manual shaft retaining screw (1) (Fig. 271) and torque to 5 N·m (45 in. lbs.) torque.

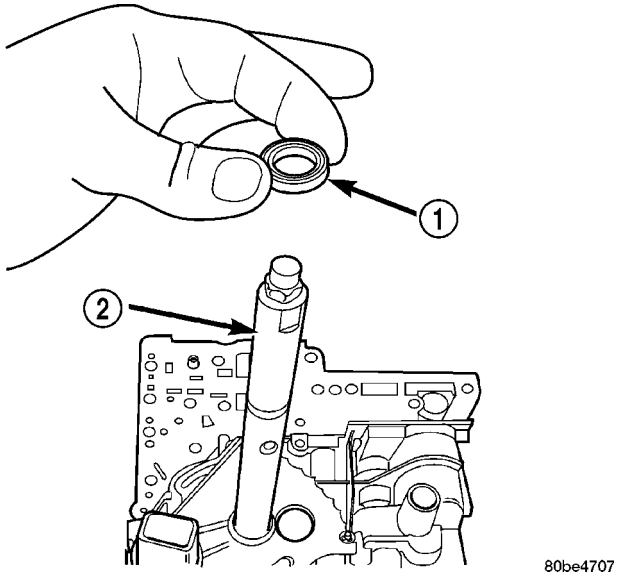

Fig. 272 Manual Shaft Seal - Typical

1 - SEAL
2 - MANUAL SHAFT

(3) Install the manual shaft seal (1) (Fig. 272).

(4) Install valve body to the transmission. (Refer to 21 - TRANSMISSION//AUTOMATIC - 42RLE/VALVE BODY - INSTALLATION)

TRANSMISSION TEMPERATURE SENSOR

DESCRIPTION

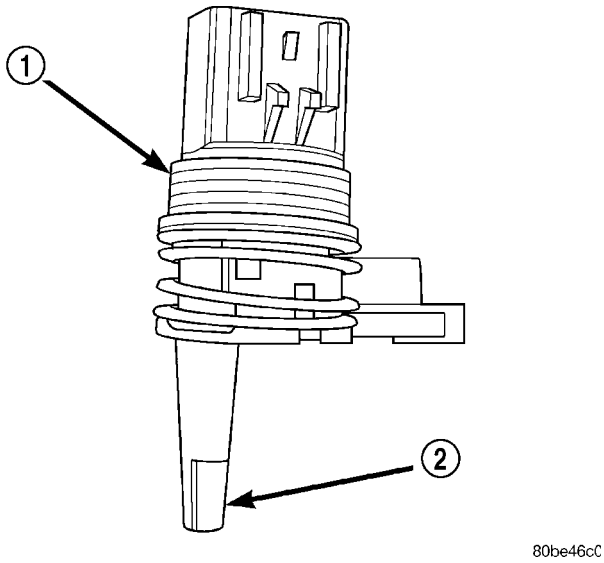

Fig. 273 Transmission Temperature Sensor

1 - TRANSMISSION RANGE SENSOR
2 - TEMPERATURE SENSOR

The transmission temperature sensor (2) (Fig. 273) is located in the transmission range sensor (1) and communicates transmission sump temperature to the TCM.

OPERATION

The transmission range sensor (TRS) has an integrated thermistor that the TCM uses to monitor the transmission's sump temperature. Since fluid temperature can affect transmission shift quality and convertor lock up, the TCM requires this information to determine which shift schedule to operate in. The TCM also monitors this temperature data so it can energize the vehicle cooling fan(s) when a transmission "overheat" condition exists. If the thermistor circuit fails, the TCM will revert to calculated oil temperature usage.

CALCULATED TEMPERATURE

A failure in the temperature sensor or circuit will result in calculated temperature being substituted for actual temperature. Calculated temperature is a predicted fluid temperature which is calculated from a combination of inputs:

- Battery (ambient) temperature
- Engine coolant temperature
- In-gear run time since start-up

VALVE BODY

DESCRIPTION

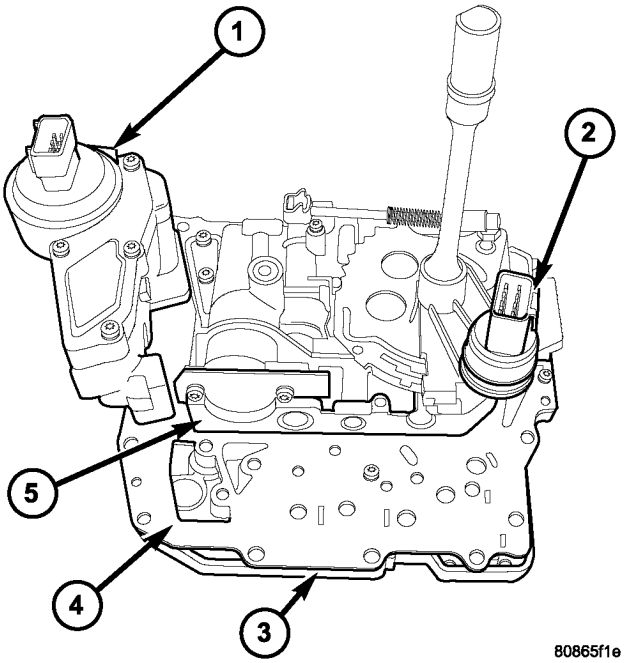

Fig. 274 Valve Body Assembly

1 - SOLENOID/PRESSURE SWITCH ASSEMBLY
2 - TRS
3 - TRANSFER PLATE
4 - SEPARATOR PLATE
5 - VALVE BODY

The valve body assembly (Fig. 274) consists of a cast aluminum valve body (5),separator plate (4), and transfer plate (3). The valve body contains valves and check balls that control fluid delivery to the torque converter clutch, solenoid/pressure switch assembly, and frictional clutches.

Also mounted to the valve body assembly are the solenoid/pressure switch assembly and the transmission range sensor (2) (Fig. 274).

The valves contained within the valve body (1) include the following (Fig. 275):

- Regulator valve(2)
- Solenoid switch valve(7)
- Manual valve(5)
- Converter clutch switch valve(6)
- Converter clutch control valve(4)
- Torque converter regulator valve(2)
- Low/Reverse switch valve(3)

In addition, the valve body also contains the thermal valve, #2, 3, 4 & 5 check balls and the 2/4 accumulator assembly.

VALVE BODY (Continued)

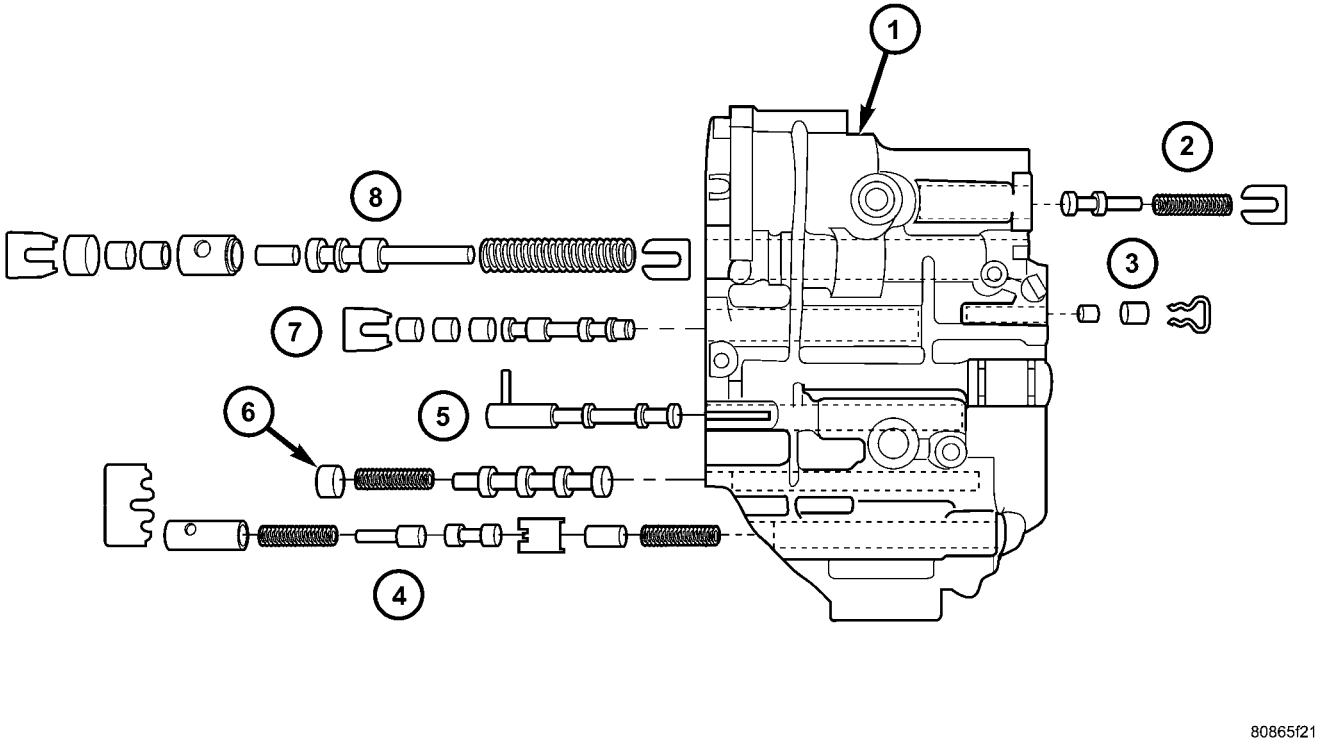

Fig. 275 Valve Body - Exploded

1 - VALVE BODY
2 - T/C REGULATOR VALVE
3 - L/R SWITCH VALVE
4 - CONVERTER CLUTCH CONTROL VALVE
5 - MANUAL VALVE
6 - CONVERTER CLUTCH SWITCH VALVE
7 - SOLENOID SWITCH VALVE
8 - REGULATOR VALVE

OPERATION

NOTE: (Refer to 21 - TRANSMISSION/AUTOMATIC - 42RLE - SCHEMATICS AND DIAGRAMS) for a visual aid in determining valve location, operation and design.

THERMAL VALVE

The thermal valve (1) (Fig. 276) is a bi-metallic shudder valve that helps control the venting rate of oil pressure in the underdrive clutch passage during release of the clutch. When the oil temperature is approximately 20 degrees Fahrenheit or less, the valve is fully open to assist in venting oil past the U1 orifice (2). At temperatures above 20 degrees, the valve starts to close and becomes fully closed at approximately 140 degrees. The thermal valve is located in the transfer plate of the valve body.

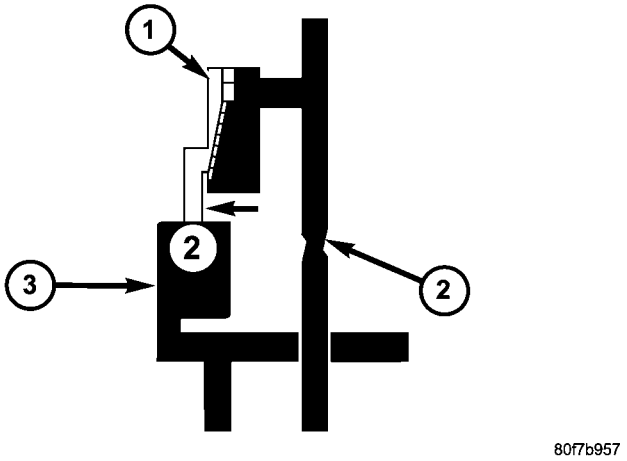

Fig. 276 Thermal Valve

1 - THERMAL VALVE
2 - U1 ORIFICE
3 - NUMBER 2 CHECK BALL

VALVE BODY (Continued)

REGULATOR VALVE

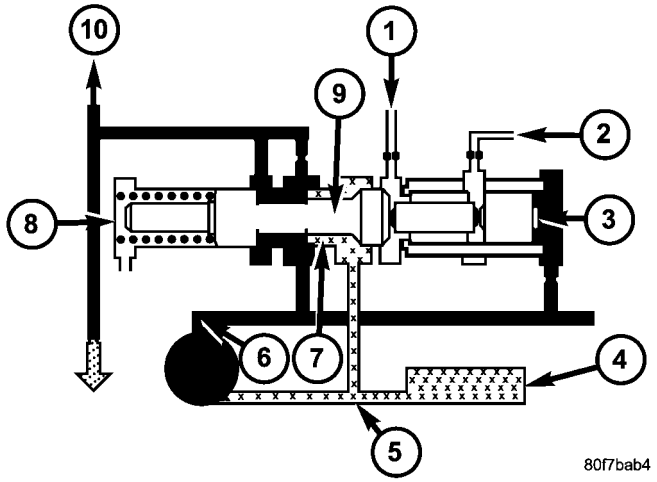

Fig. 277 Regulator Valve

1 - FROM OVERDRIVE CLUTCH CIRCUIT
2 - FROM MANUAL VALVE
3 - HYDRAULIC PRESSURE
4 - FILTER
5 - PUMP INLET
6 - PUMP OUTLET
7 - OIL PRESSURE REGULATED AT THIS POINT
8 - SPRING TENSION
9 - REGULATOR VALVE
10 - TORQUE CONVERTER CONTROL VALVE

The regulator valve (9) (Fig. 277) controls hydraulic pressure in the transmission. It receives unregulated pressure from the pump (6), which works against spring tension (8) to maintain oil at specific pressures. A system of sleeves and ports allows the regulator valve to work at one of three predetermined pressure levels. Regulated oil pressure is also referred to as “line pressure.”

SOLENOID SWITCH VALVE

The solenoid switch valve (Fig. 278) controls line pressure from the LR/CC solenoid (4). In one position, it allows the low/reverse clutch to be pressurized. In the other, it directs line pressure to the converter control and converter clutch valves (7).

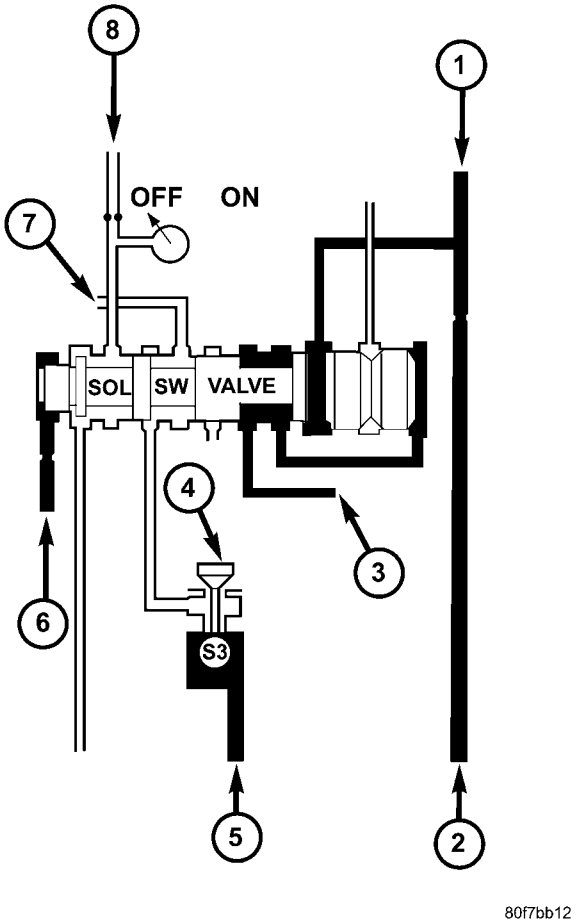

Fig. 278 Solenoid Switch Valve De-Energized

1 - 2/4 CLUTCH
2 - MANUAL VALVE
3 - UD CLUTCH
4 - LR/CC SOLENOID DE-ENERGIZED
5 - MANUAL VALVE
6 - LINE PRESSURE
7 - CONVERTER CLUTCH SWITCH AND CONTROL VALVES
8 - LR CLUTCH

VALVE BODY (Continued)

MANUAL VALVE

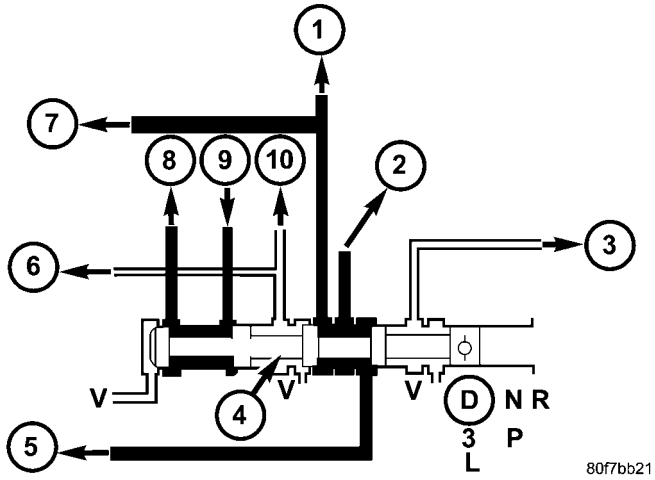

Fig. 279 Manual Valve

1 - UD CLUTCH
2 - LR/CC CLUTCH
3 - REVERSE CLUTCH
4 - MANUAL VALVE
5 - REGULATOR VALVE
6 - REGULATOR VALVE
7 - CONVERTER CLUTCH CONTROL VALVE
8 - 2/4 CLUTCH
9 - 2/4 - L/R SOLENOID
10 - L/R CLUTCH

The manual valve (4) (Fig. 279) is operated by the mechanical shift linkage. Its primary responsibility is to send line pressure to the appropriate hydraulic circuits and solenoids. The valve has three operating ranges or positions.

CONVERTER CLUTCH SWITCH VALVE

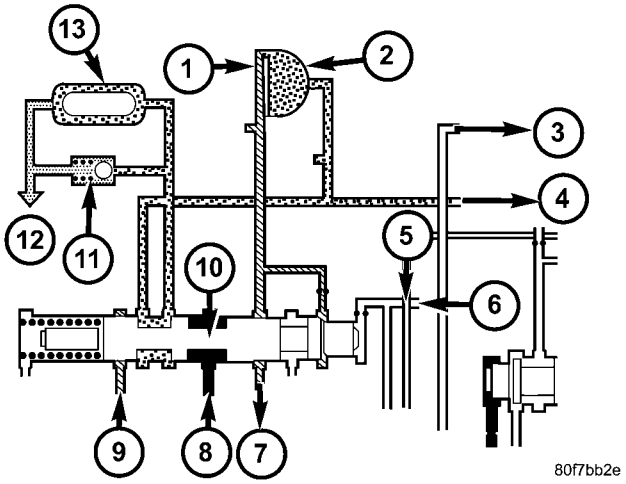

Fig. 280 Converter Clutch Switch Valve

1 - CONVERTER CLUTCH
2 - TORQUE CONVERTER
3 - LR CLUTCH
4 - DRIBBLERS
5 - REGULATOR VALVE
6 - SOLENOID SWITCH VALVE
7 - CONVERTER CLUTCH CONTROL VALVE
8 - TORQUE CONVERTER REGULATOR VALVE
9 - CONVERTER CLUTCH CONTROL VALVE
10 - CONVERTER CLUTCH SWITCH VALVE
11 - BYPASS VALVE
12 - LUBE
13 - COOLER

The main responsibility of the converter clutch switch valve (10) (Fig. 280) is to control hydraulic pressure applied to the front (off) side of the converter clutch piston. Line pressure from the regulator valve (5) is fed to the torque converter regulator valve (8). The pressure is then directed to the converter clutch switch valve (10) and to the front side of the converter clutch piston. This pressure pushes the piston back and disengages the converter clutch.

VALVE BODY (Continued)

CONVERTER CLUTCH CONTROL VALVE

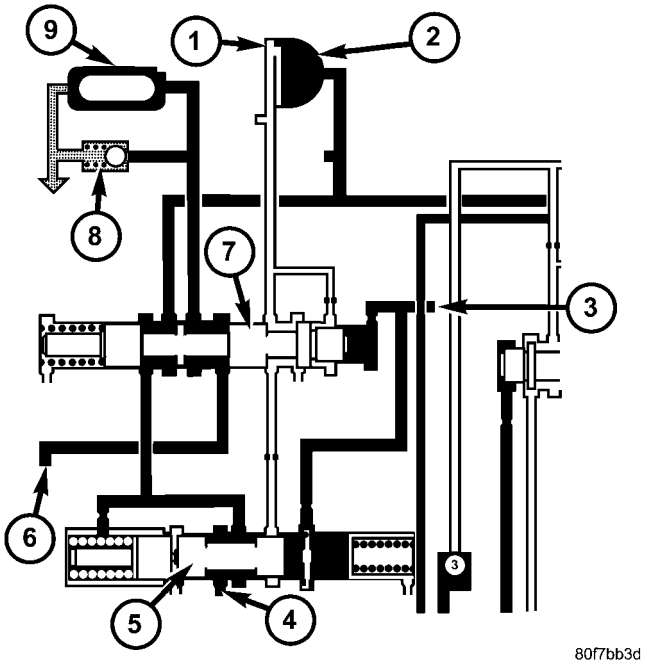

Fig. 281 Converter Clutch Control Valve

1 - CONVERTER CLUTCH
2 - TORQUE CONVERTER
3 - LR/CC SOLENOID
4 - FROM MANUAL VALVE
5 - CONVERTER CLUTCH CONTROL VALVE
6 - TORQUE CONVERTER REGULATOR VALVE
7 - CONVERTER CLUTCH SWITCH VALVE
8 - BYPASS VALVE
9 - COOLER

The converter clutch control valve (5) (Fig. 281) controls the back (on) side of the torque converter clutch (1). When the controller energizes or modulates the LR/CC solenoid to apply the converter clutch piston, both the converter clutch control valve (5) and the converter control valve move, allowing pressure to be applied to the back side of the clutch.

T/C REGULATOR VALVE

The torque converter regulator valve slightly regulates the flow of fluid to the torque converter.

LOW/REVERSE SWITCH VALVE

The low/reverse clutch is applied from different sources, depending on whether low (1st) gear or reverse is selected. The low/reverse switch valve alternates positions depending on from which direction fluid pressure is applied. By design, when the valve is shifted by fluid pressure from one channel, the opposing channel is blocked. The switch valve alienates the possibility of a sticking ball check, thus providing consistent application of the low/reverse clutch under these operating conditions.

REMOVAL

NOTE: If valve body is being reconditioned or replaced, it is necessary to perform the Quick Learn Procedure. (Refer to 8 - ELECTRICAL/ELECTRONIC CONTROL MODULES/TRANSMISSION CONTROL MODULE - STANDARD PROCEDURE)

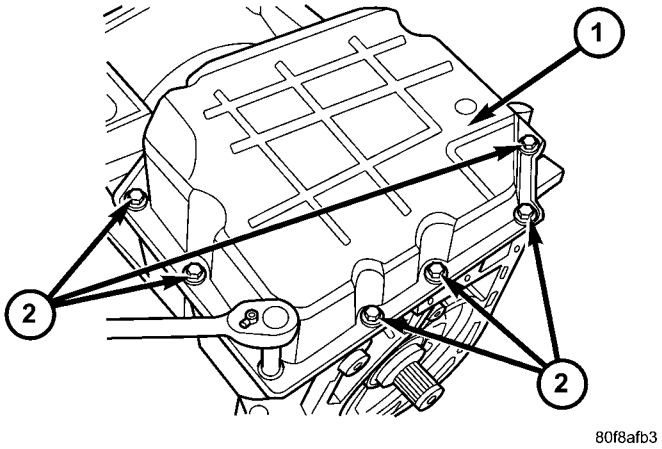

Fig. 282 Remove Transmission Oil Pan Bolts

1 - TRANSMISSION OIL PAN
2 - BOLTS

(1) Disconnect the TRS and solenoid wiring connectors.

(2) Disconnect the shift cable from the shift lever (at the transmission).

(3) Move the manual shift lever clockwise as far as it will go. This should be one position past the L position. Then remove the manual shift lever.

NOTE: One of the oil pan bolts has a sealing patch applied from the factory. Separate this bolts for reuse.

(4) Remove transmission pan bolts (2) (Fig. 282).

VALVE BODY (Continued)

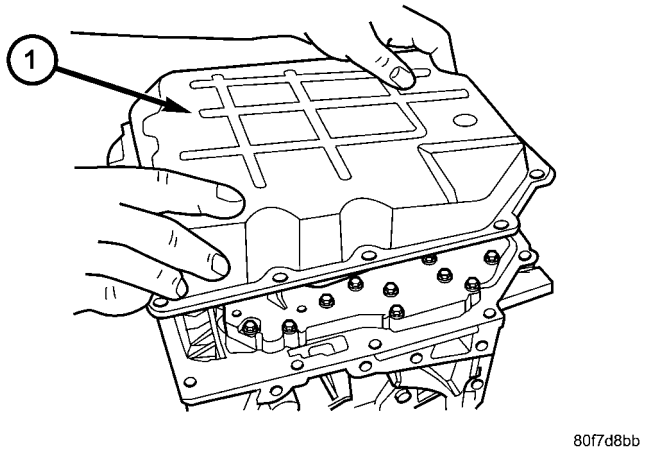

Fig. 283 Remove Transmission Oil Pan

1 - TRANSMISSION OIL PAN

(5) Remove transmission oil pan (1) (Fig. 283).

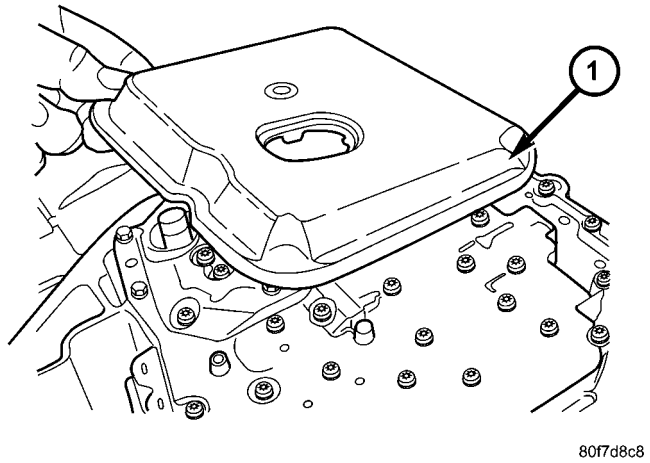

Fig. 284 Remove Transmission Filter

1 - TRANSMISSION FILTER

(6) Remove oil filter (1) (Fig. 284) from valve body. It is held in place by two screws.

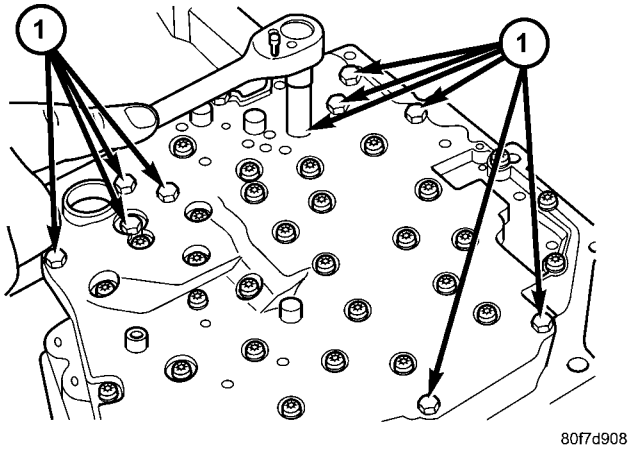

Fig. 285 Remove Valve Body Bolts

1 - BOLTS

(7) Remove valve body bolts-to-case (1) (Fig. 285).

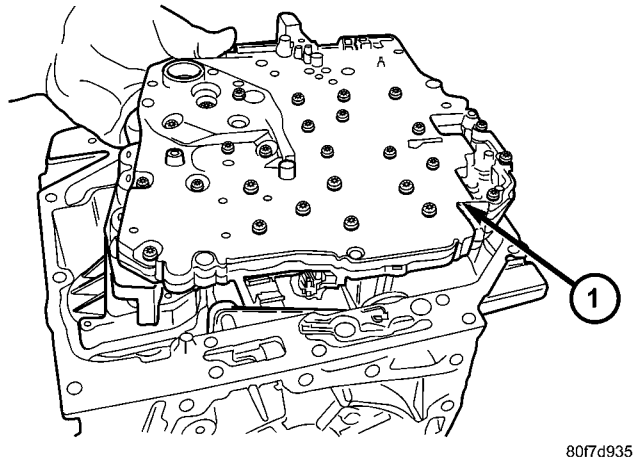

Fig. 286 Remove Valve Body From Transmission

1 - VALVE BODY

CAUTION: The overdrive and underdrive accumulators and springs may fall out when removing the valve body.

(8) Carefully remove valve body assembly (1) from the transmission (Fig. 286).

VALVE BODY (Continued)

DISASSEMBLY

NOTE: If the valve body is being reconditioned or replaced, it is necessary to perform the Quick Learn Procedure using the scan tool (Refer to 8 - ELECTRICAL/ELECTRONIC CONTROL MODULES/TRANSMISSION CONTROL MODULE - STANDARD PROCEDURE)

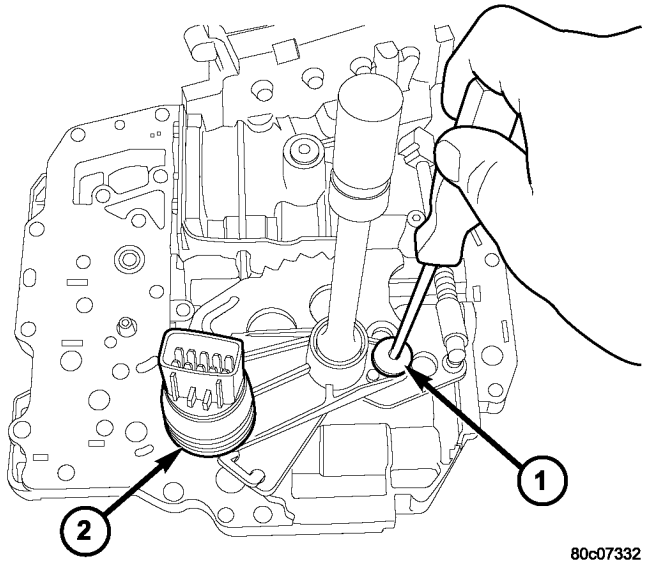

Fig. 287 Manual Shaft Retaining Screw

1 - SCREW
2 - TRS

(1) Remove manual shaft seal.

(2) Remove manual shaft screw (1) (Fig. 287).

(3) Remove Transmission Range Sensor (TRS) (1) and manual shaft (2) (Fig. 288).

(4) Remove Solenoid/Pressure Switch Assembly (1) from valve body (Fig. 289).

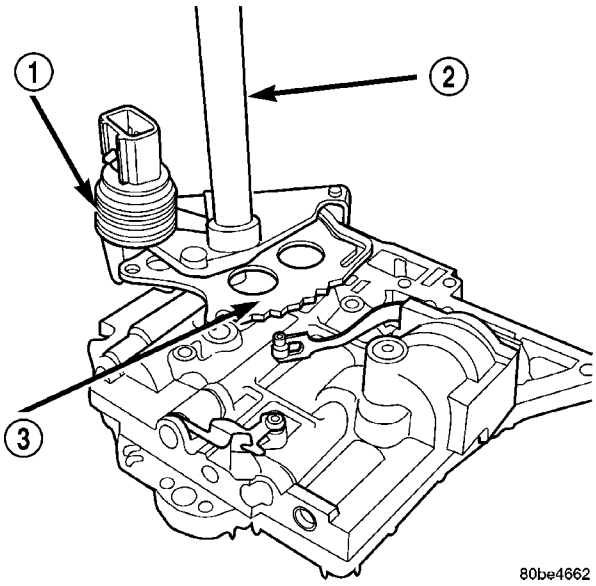

Fig. 288 Manual Shaft/Rooster Comb and Transmission Range Sensor

1 - TRANSMISSION RANGE SENSOR
2 - MANUAL SHAFT
3 - ROOSTER COMB

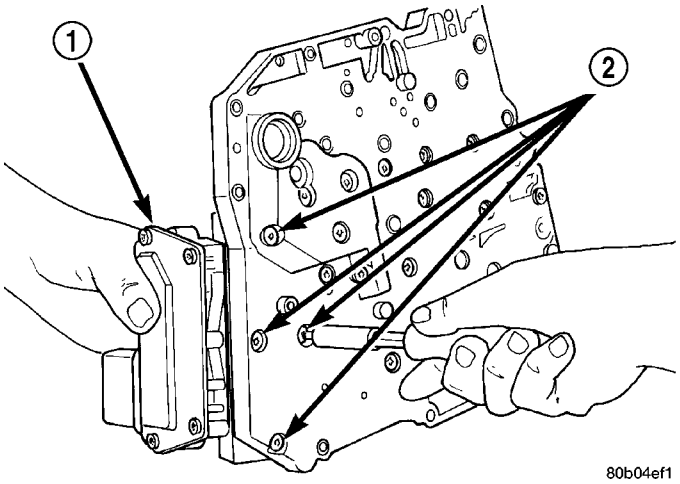

Fig. 289 Solenoid Retaining Screws

1 - SOLENOID/PRESSURE SWITCH ASSEMBLY
2 - RETAINING SCREWS

VALVE BODY (Continued)

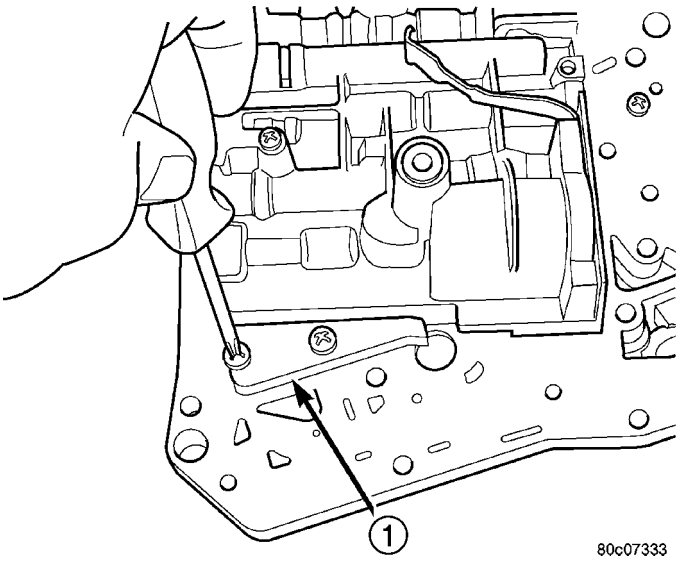

Fig. 290 Remove Stiffener Plate

1 - STIFFENER PLATE

(5) Remove valve body stiffener plate (1) (Fig. 290).

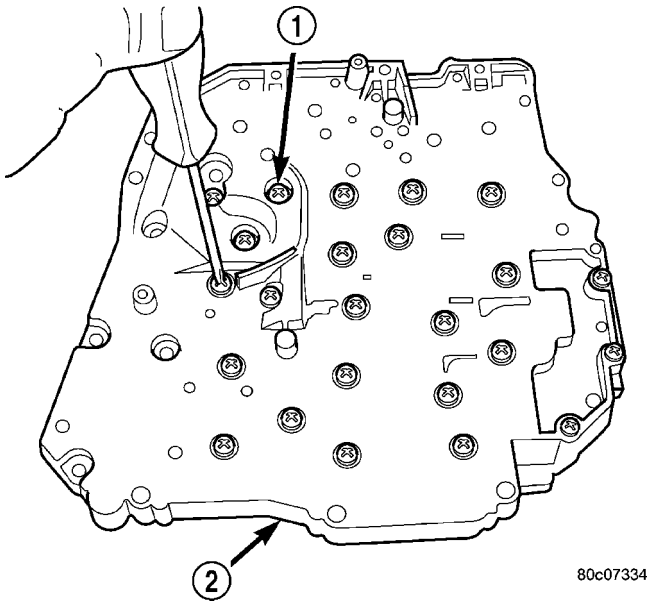

Fig. 291 Remove Transfer Plate-to-Valve Body Screws

1 - SCREW (24)
2 - TRANSFER PLATE

(6) Invert valve body assembly and remove transfer plate-to-valve body screws (1) (Fig. 291).

(7) Remove transfer/separator plate (1) from valve body (2) (Fig. 292)

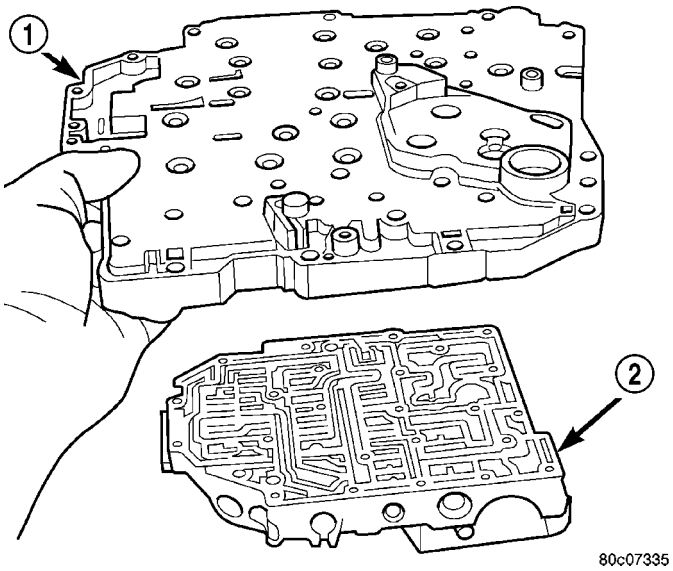

Fig. 292 Remove Transfer Plate to Valve Body

1 - TRANSFER PLATE
2 - VALVE BODY

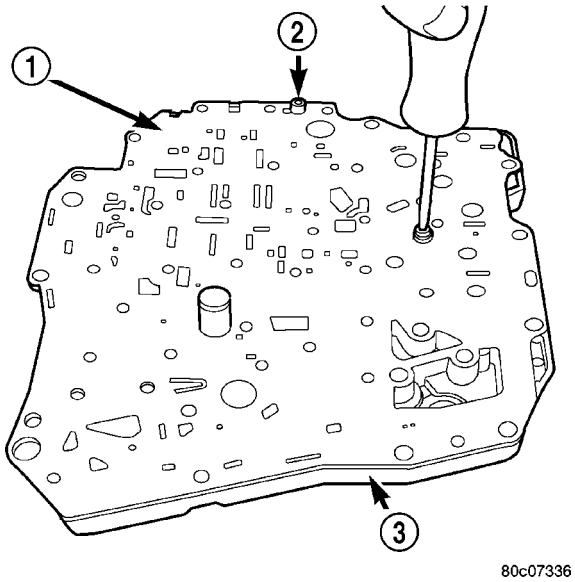

Fig. 293 Remove Separator Plate-to-Transfer Plate Screws

1 - SEPARATOR PLATE
2 - SCREW (2)
3 - TRANSFER PLATE

(8) Remove separator plate-to-transfer plate screws (2) (Fig. 293).

VALVE BODY (Continued)

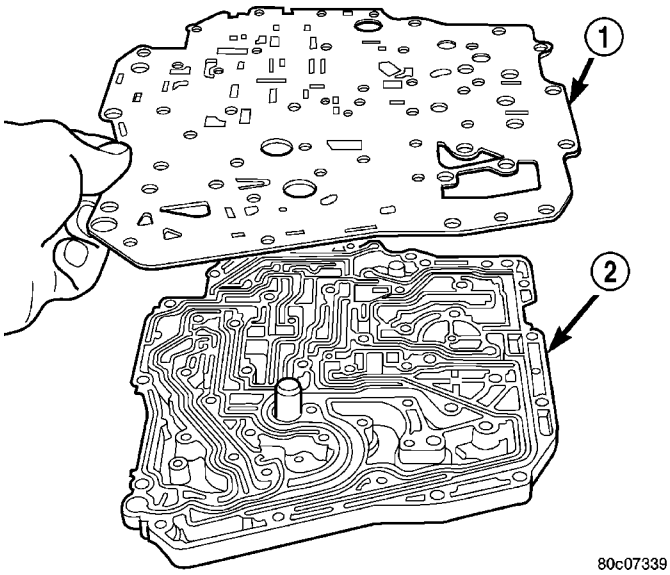

Fig. 294 Remove Separator Plate to Transfer Plate

1 - SEPARATOR PLATE
2 - TRANSFER PLATE

(9) Remove separator plate (1) from transfer plate (2) (Fig. 294).

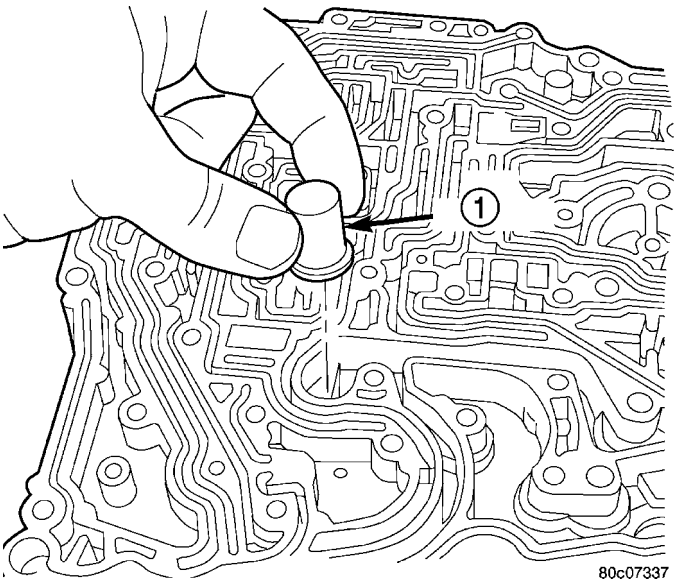

Fig. 295 Remove Oil Screen to Transfer Plate

1 - OIL SCREEN

(10) Remove the oil screen (1) from the transfer plate (Fig. 295).

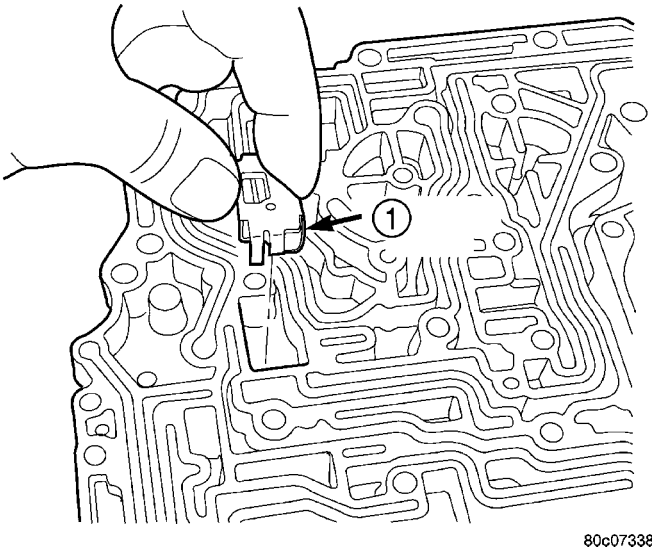

Fig. 296 Remove Thermal Valve to Transfer Plate

1 - THERMAL VALVE

(11) Remove thermal valve (1) (Fig. 296) from transfer plate.

(12) Remove valve body check balls (1-4). Note their location for assembly ease (Fig. 297).

(13) Remove 2/4 accumulator assembly (1-5) (Fig. 298).

(14) Remove dual retainer plate (2) from valve body. Use special tool 6301 (1) to remove plate (2) (Fig. 299).

VALVE BODY (Continued)

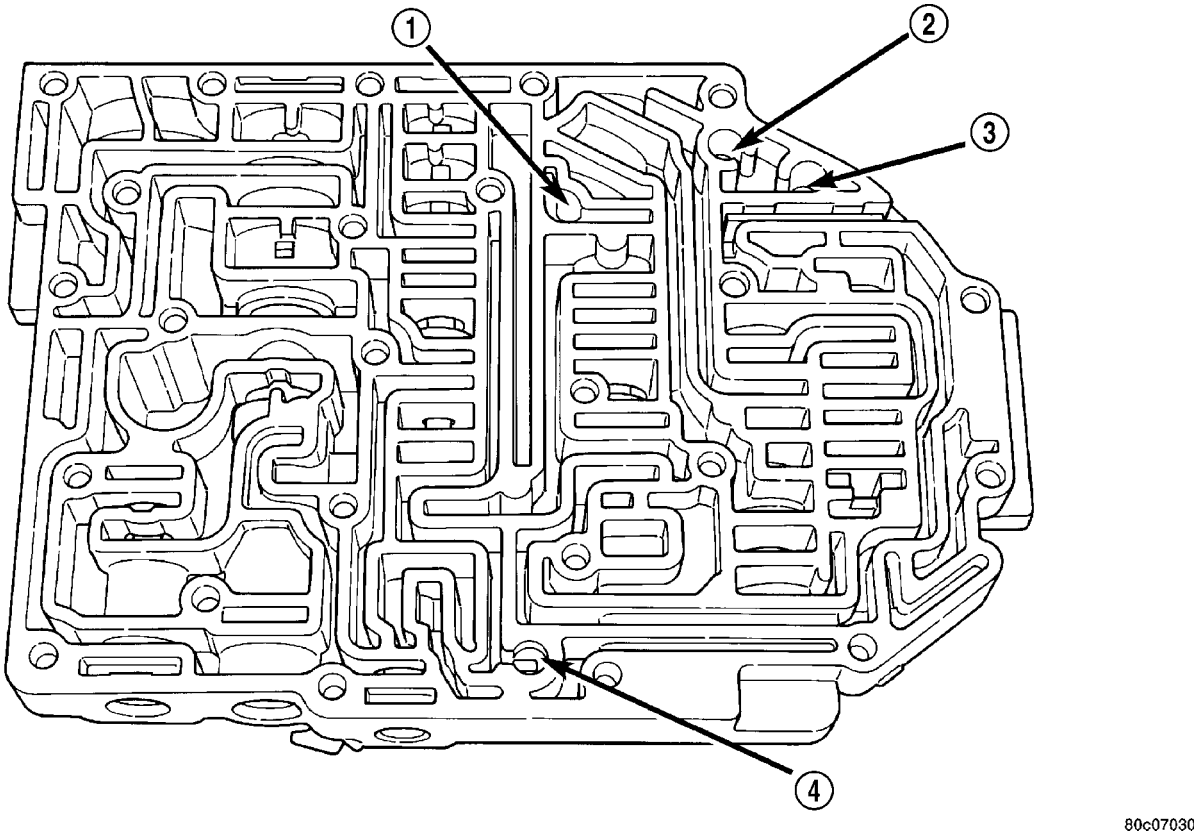

Fig. 297 Ball Check Location

1 - (#4) BALL CHECK LOCATION
2 - (#2) BALL CHECK LOCATION
3 - (#5) BALL CHECK LOCATION
4 - (#3) BALL CHECK LOCATION

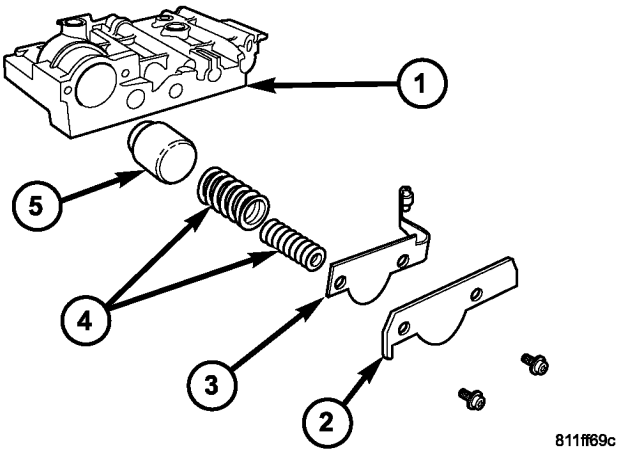

Fig. 298 2/4 Accumulator Assembly

1 - VALVE BODY
2 - RETAINER PLATE
3 - DETENT SPRING
4 - RETURN SPRINGS
5 - PISTON

(15) Remove regulator valve spring retainer (2) (Fig. 300).

(16) Remove remaining retainers (1, 2) (Fig. 301).

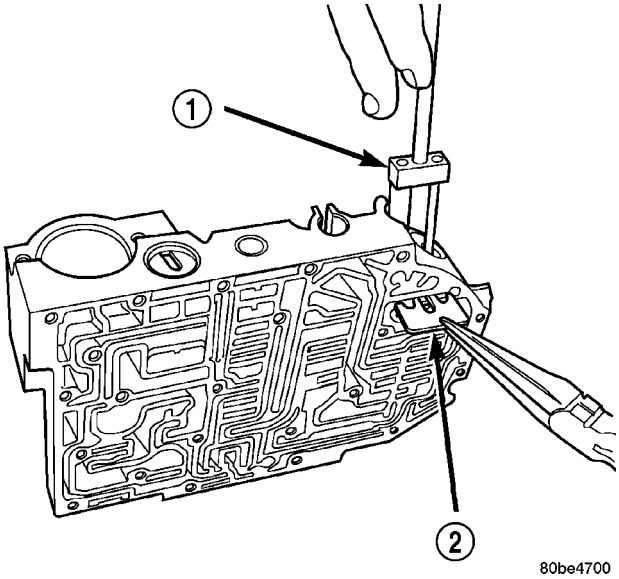

Fig. 299 Remove Dual Retainer Plate using Tool 6301

1 - TOOL 6301
2 - RETAINER

(17) Remove all valves and springs (Fig. 302).

VALVE BODY (Continued)

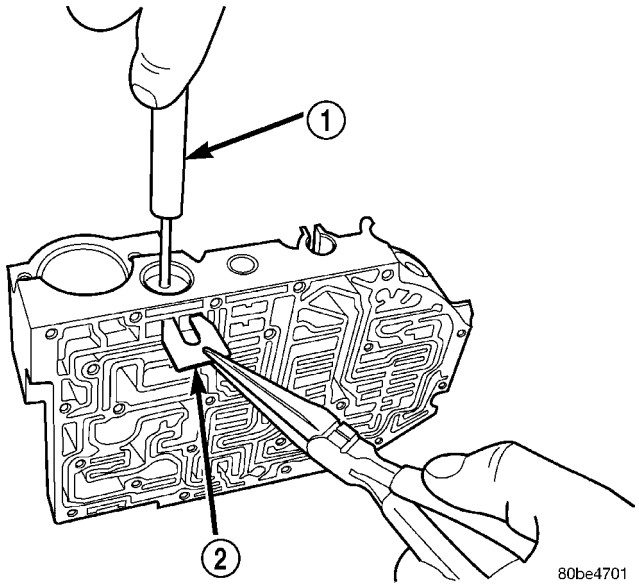

Fig. 300 Remove Regulator Valve Spring Retainer using Tool 6302

1 - TOOL 6302
2 - RETAINER

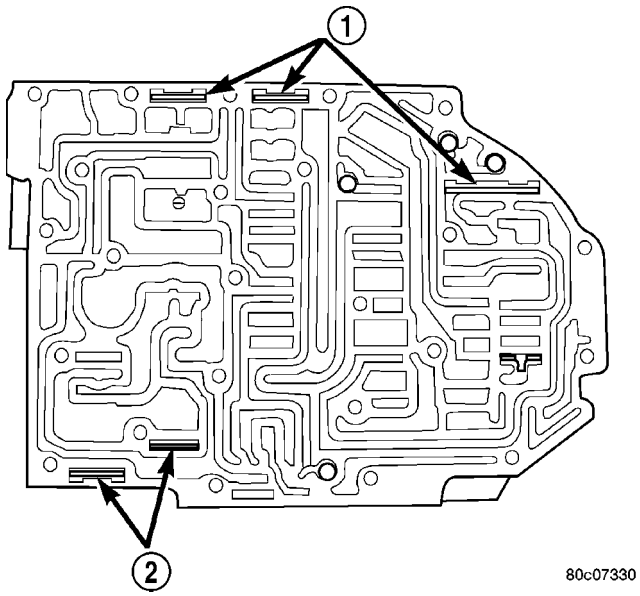

Fig. 301 Valve Retainer Location

1 - RETAINER
2 - RETAINER

(18) Cleanliness through entire disassembly and assembly of the valve body cannot be overempha-

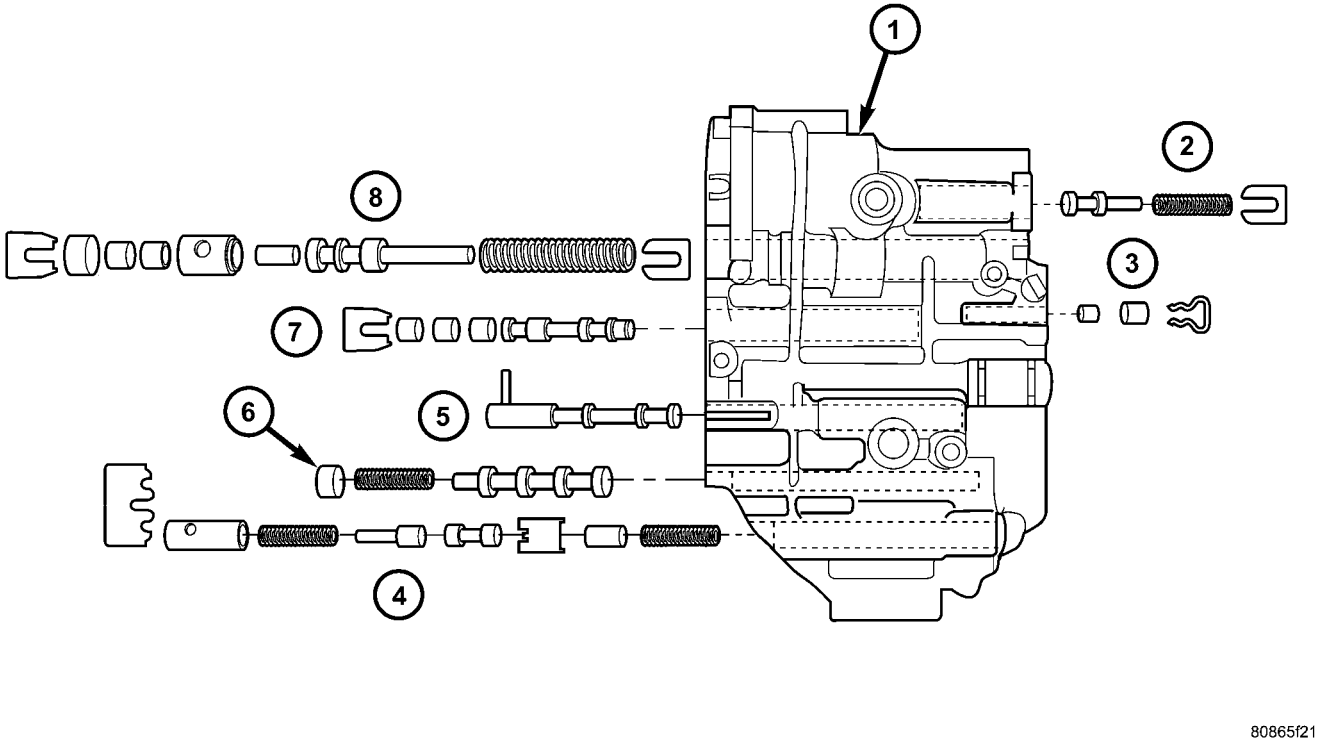

Fig. 302 Valve Body Assembly

1 - VALVE BODY
2 - T/C REGULATOR VALVE
3 - L/R SWITCH VALVE
4 - CONVERTER CLUTCH CONTROL VALVE
5 - MANUAL VALVE
6 - CONVERTER CLUTCH SWITCH VALVE
7 - SOLENOID SWITCH VALVE
8 - REGULATOR VALVE

VALVE BODY (Continued)

sized. When disassembling, each part should be washed in a suitable solvent, then dried by compressed air. **Do not wipe parts with shop towels.** All mating surfaces in the valve body are accurately machined; therefore, careful handling of all parts must be exercised to avoid nicks or burrs.

ASSEMBLY

NOTE: If the valve body assembly is being reconditioned or replaced, it is necessary to perform the Quick Learn Procedure using the scan tool. (Refer to 8 - ELECTRICAL/ELECTRONIC CONTROL MODULES/TRANSMISSION CONTROL MODULE - STANDARD PROCEDURE)

(1) Install all valves and springs as shown (Fig. 303).

(2) Install regulator valve spring retainer (2) (Fig. 304).

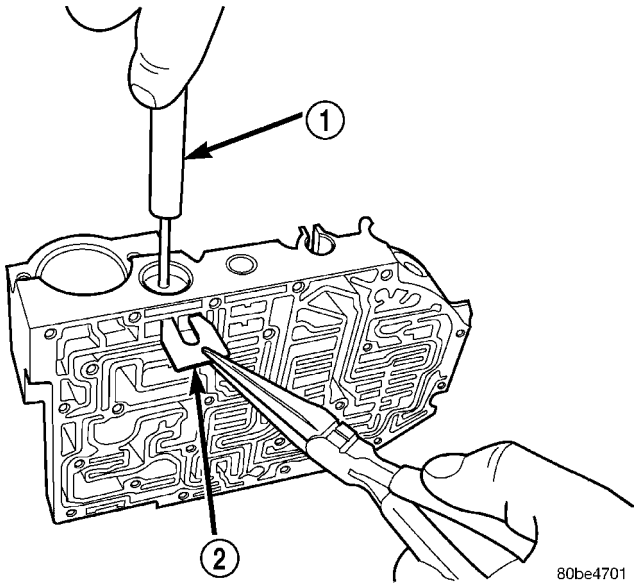

Fig. 304 Install Regulator Valve Spring Retainer using Tool 6302

1 - TOOL 6302
2 - RETAINER

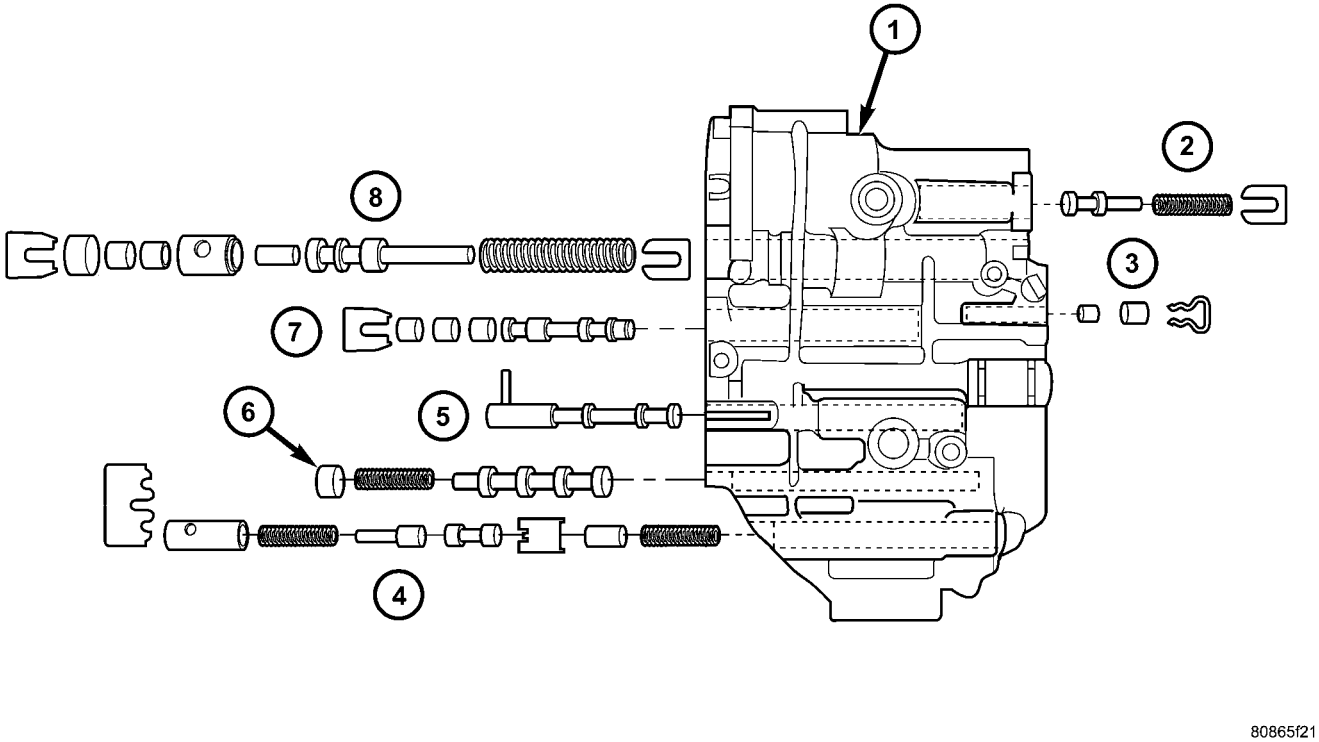

Fig. 303 Valve Body Assembly

1 - VALVE BODY
2 - T/C REGULATOR VALVE
3 - L/R SWITCH VALVE
4 - CONVERTER CLUTCH CONTROL VALVE
5 - MANUAL VALVE
6 - CONVERTER CLUTCH SWITCH VALVE
7 - SOLENOID SWITCH VALVE
8 - REGULATOR VALVE

VALVE BODY (Continued)

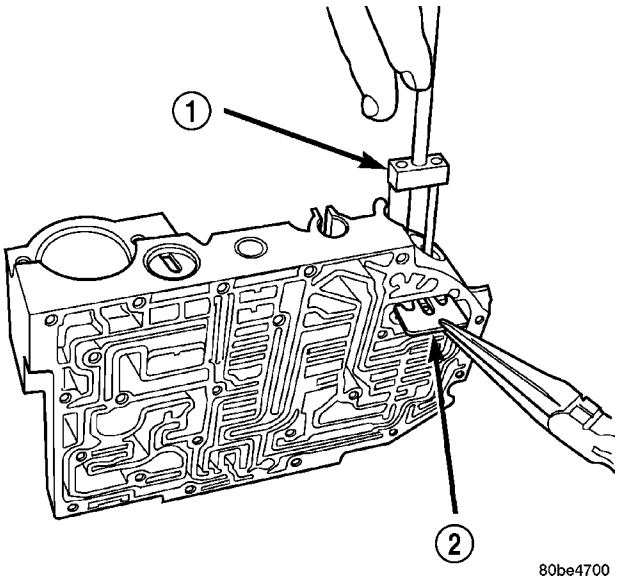

Fig. 305 Install Dual Retainer Plate using Tool 6301

1 - TOOL 6301
2 - RETAINER

(3) Install dual retainer plate (2) using Tool 6301 (1) (Fig. 305).

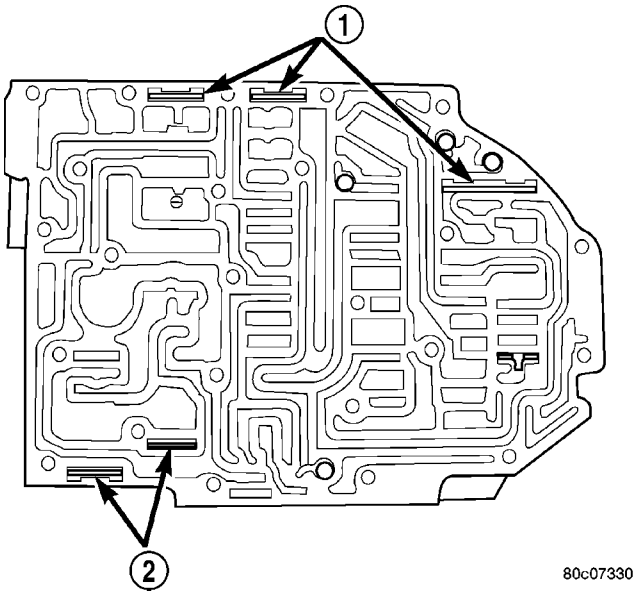

Fig. 306 Valve Retainer Location

1 - RETAINER
2 - RETAINER

(4) Verify that all retainers (1, 2) are installed as shown (Fig. 306). Retainers should be flush or below valve body surface.

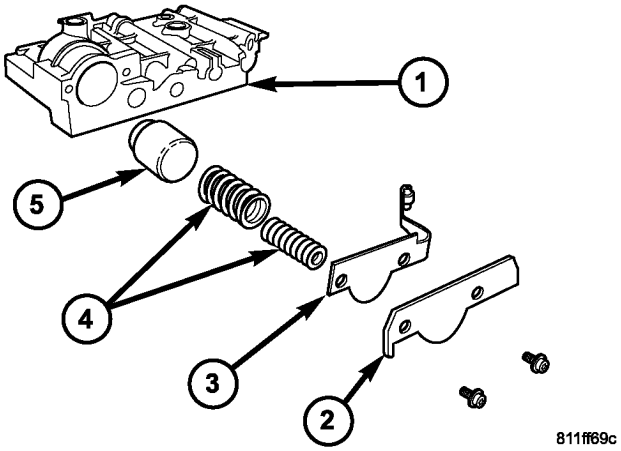

Fig. 307 2/4 Accumulator Assembly

1 - VALVE BODY
2 - RETAINER PLATE
3 - DETENT SPRING
4 - RETURN SPRINGS
5 - PISTON

(5) Install 2/4 Accumulator components (1-5) as shown (Fig. 307). Torque 2/4 Accumulator retainer plate to 5 N·m (45 in. lbs.).

(6) Install check balls into position as shown (Fig. 308). If necessary, secure them with petrolatum or transmission assembly gel for assembly ease.

(7) Install thermal valve (1) to the transfer plate (Fig. 309).

(8) Install the oil screen (1) to the transfer plate (Fig. 310).

VALVE BODY (Continued)

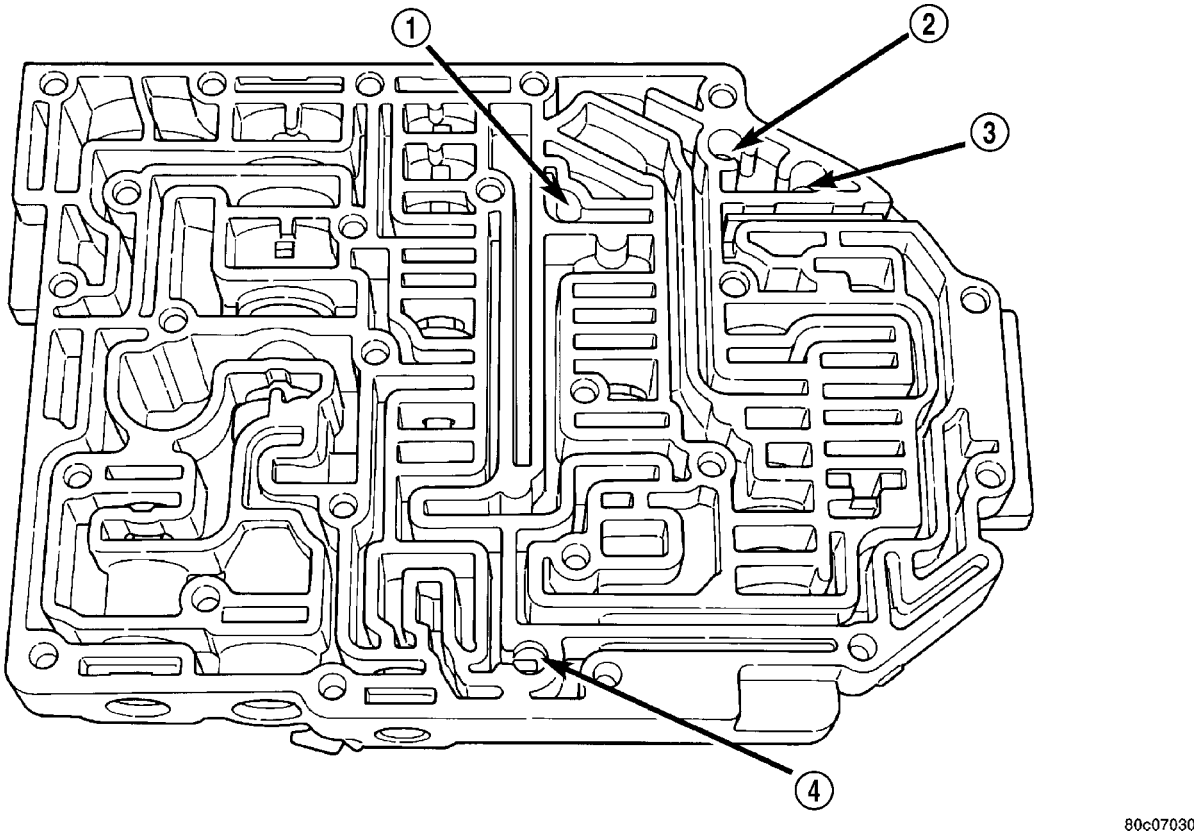

Fig. 308 Ball Check Location

1 - (#4) BALL CHECK LOCATION
2 - (#2) BALL CHECK LOCATION
3 - (#5) BALL CHECK LOCATION
4 - (#3) BALL CHECK LOCATION

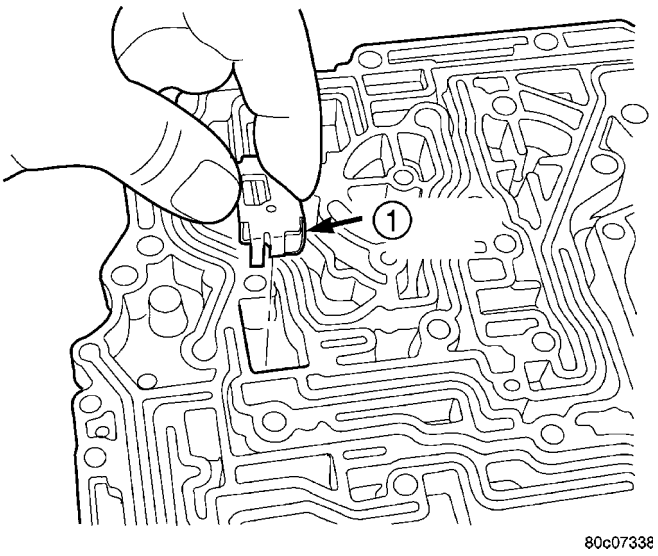

Fig. 309 Install Thermal Valve to Transfer Plate

1 - THERMAL VALVE

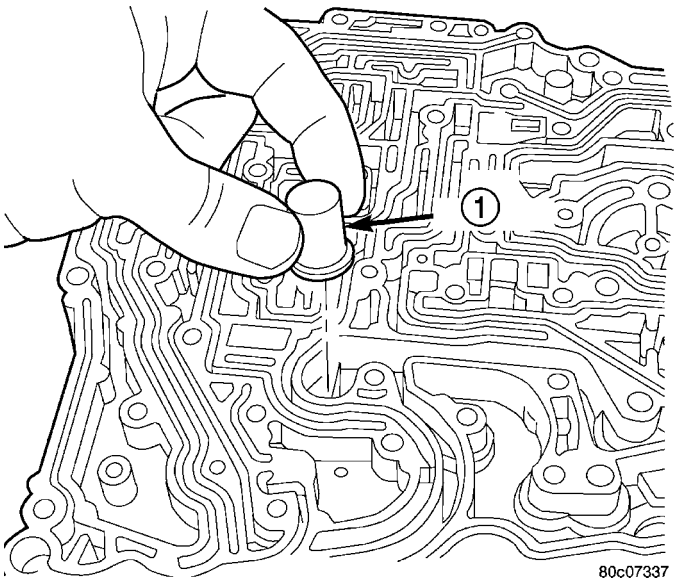

Fig. 310 Install Oil Screen to Transfer Plate

1 - OIL SCREEN

(9) Install separator plate (1) to transfer plate (2) (Fig. 311).

(10) Install the two separator plate-to-transfer plate screws (2) (Fig. 312).

(11) Install the transfer plate (1) to the valve body (2) (Fig. 313).

VALVE BODY (Continued)

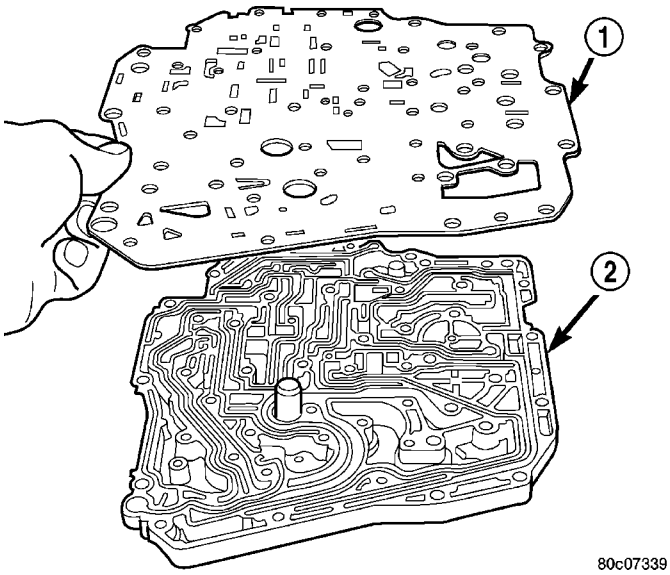

Fig. 311 Install Separator Plate to Transfer Plate

1 - SEPARATOR PLATE
2 - TRANSFER PLATE

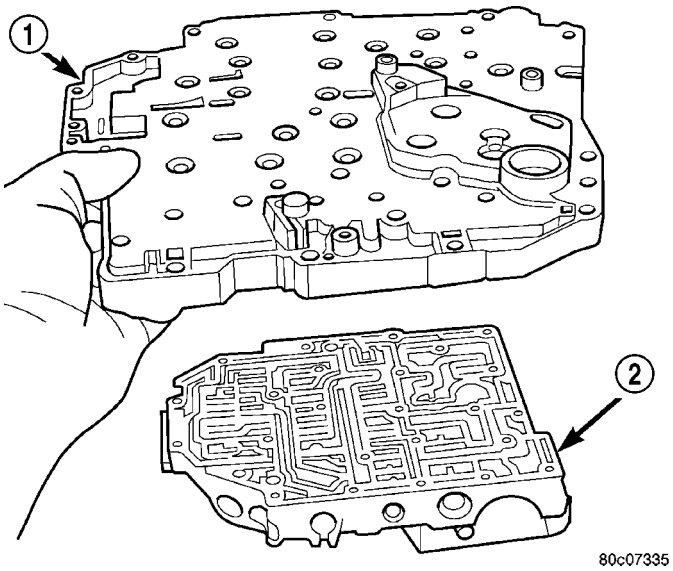

Fig. 313 Install Transfer Plate to Valve Body

1 - TRANSFER PLATE
2 - VALVE BODY

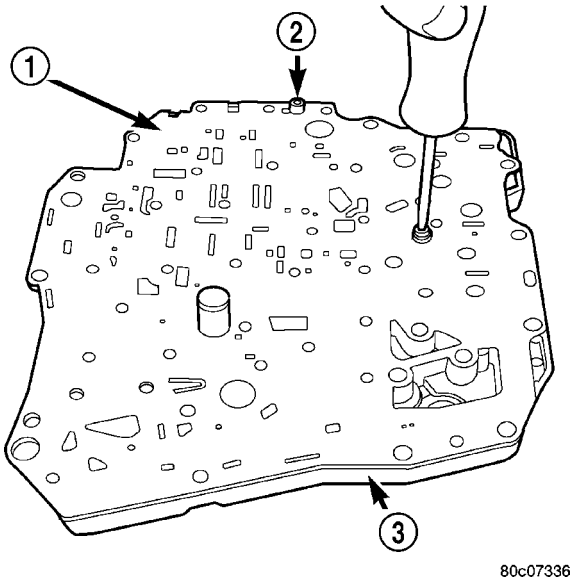

Fig. 312 Install Separator Plate-to-Transfer Plate Screws

1 - SEPARATOR PLATE
2 - SCREW (2)
3 - TRANSFER PLATE

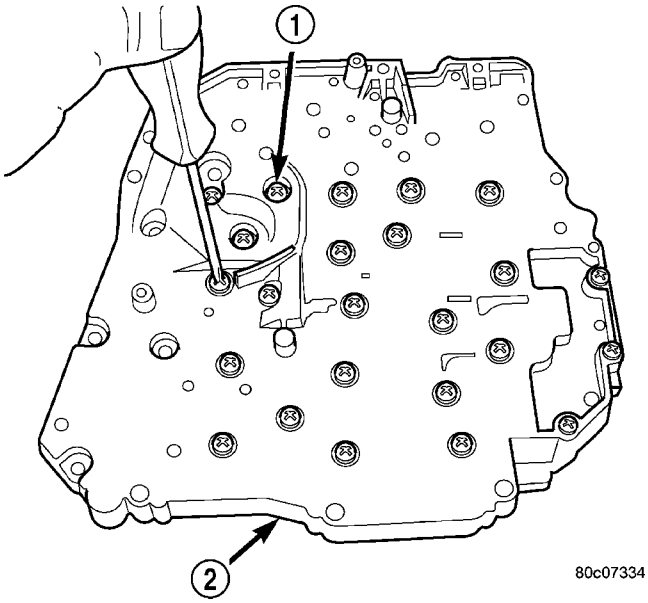

Fig. 314 Install Transfer Plate-to-Valve Body Screws

1 - SCREW (24)
2 - TRANSFER PLATE

(12) Install the transfer plate-to-valve body screws (1) (Fig. 314) and torque to 5 N·m (45 in. lbs.).

VALVE BODY (Continued)

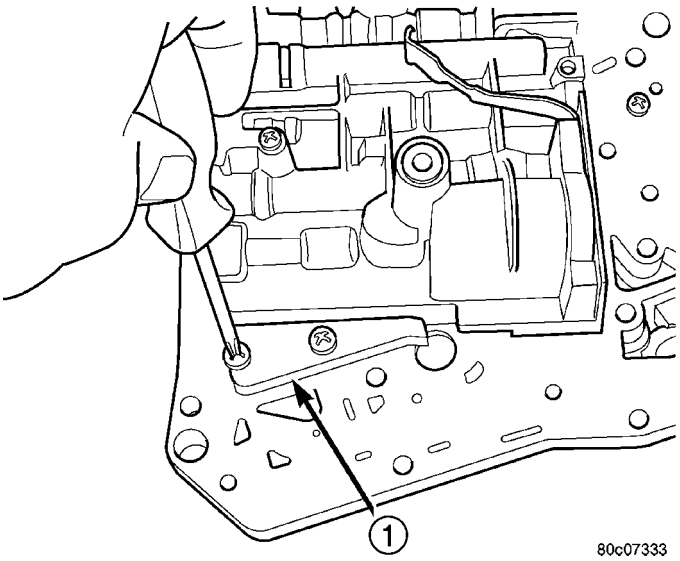

Fig. 315 Install Stiffener Plate

1 - STIFFENER PLATE

(13) Install the stiffener plate (1) (Fig. 315).

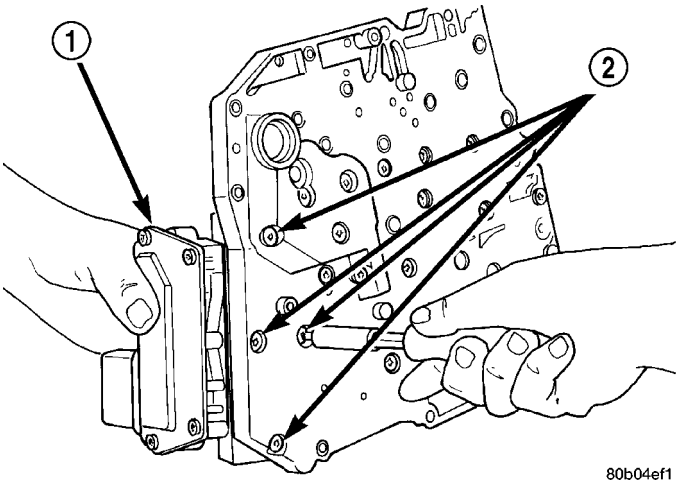

Fig. 316 Solenoid Retaining Screws

1 - SOLENOID/PRESSURE SWITCH ASSEMBLY
2 - RETAINING SCREWS

(14) Install the solenoid/pressure switch assembly (1) and screws to the transfer plate (Fig. 316) and torque to 5.5 N·m (50 in. lbs.).

(15) Install the manual shaft/rooster comb (3) and transmission range sensor (1) to the valve body (Fig. 317).

(16) Install the TRS/manual shaft retaining screw (1) (Fig. 318) and torque to 5 N·m (45 in. lbs.).

(17) Install manual shaft seal.

INSTALLATION

(1) Install valve body into position and start bolts (1). Torque valve body to transmission case bolts (1) (Fig. 319) to 12 N·m (105 in. lbs.) torque.

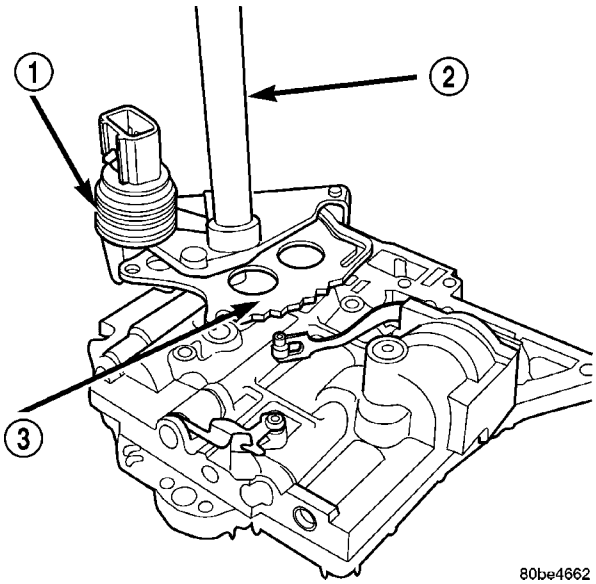

Fig. 317 Manual Shaft/Rooster Comb and Transmission Range Sensor

1 - TRANSMISSION RANGE SENSOR
2 - MANUAL SHAFT
3 - ROOSTER COMB

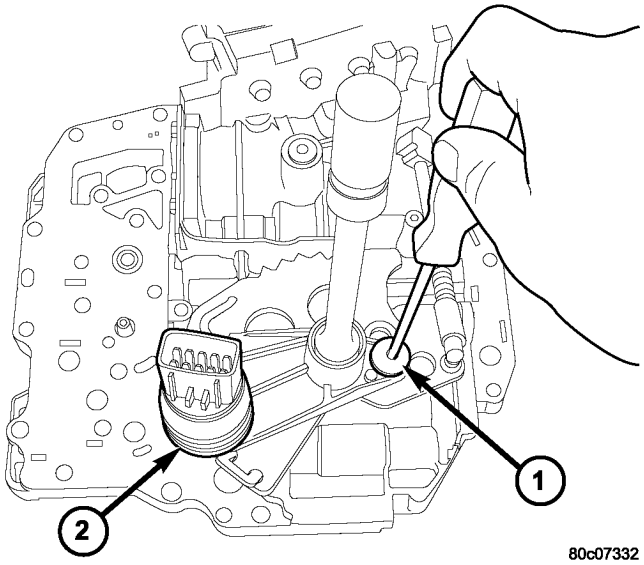

Fig. 318 Manual Shaft Retaining Screw

1 - SCREW
2 - TRS

(2) Install transmission oil filter (1) (Fig. 320).

NOTE: Before installing the oil pan bolt in the bolt hole (5) located between the torque converter clutch on and U/D clutch pressure tap circuits (Fig. 321), it will be necessary to replentish the sealing patch on the bolt using Mopar® Lock & Seal Adhesive.

VALVE BODY (Continued)

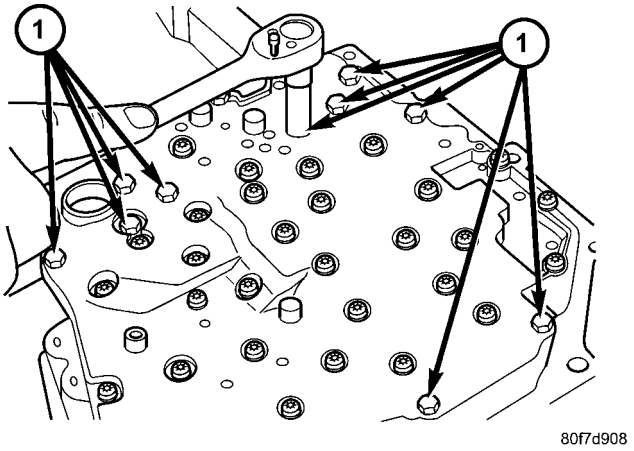

Fig. 319 Install Valve Body Bolts

1 - BOLTS

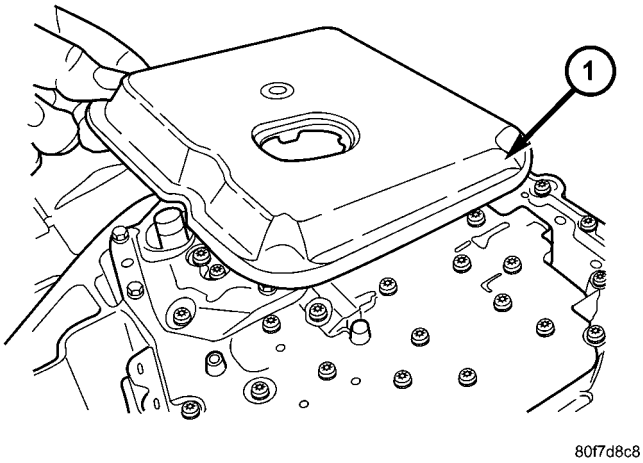

Fig. 320 Install Transmission Filter

1 - TRANSMISSION FILTER

(3) Make sure oil pan (1) and case rail are clean and dry. Install an 1/8” bead of RTV to the transmission oil pan and install to case. Tighten bolts (2) (Fig. 322) to 20 N·m (14.5 ft. lbs.).

(4) Lower vehicle and connect the TRS connector.

(5) Connect solenoid/pressure switch assembly connector.

(6) Lower vehicle.

(7) Fill transmission with ATF+4, Automatic Transmission Fluid. Verify proper fluid level. (Refer to 21 - TRANSMISSION/AUTOMATIC - 42RLE/ FLUID - STANDARD PROCEDURE)

NOTE: If the valve body has been reconditioned or replaced, it is necessary to perform the Quick Learn Procedure. (Refer to 8 - ELECTRICAL/ELECTRONIC CONTROL MODULES/TRANSMISSION CONTROL MODULE - STANDARD PROCEDURE)

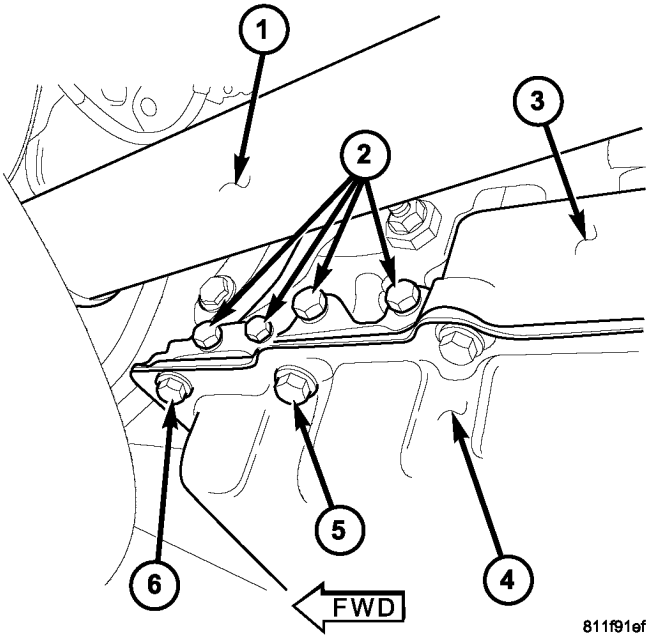

Fig. 321 Pan Fastener Location

1 - FRONT DRIVESHAFT
2 - PRESSURE PORTS
3 - TRANSMISSION CASE
4 - TRANSMISSION OIL PAN
5 - SECOND TRANSMISSION OIL PAN BOLT ON LEFT SIDE
6 - FIRST TRANSMISSION OIL PAN BOLT

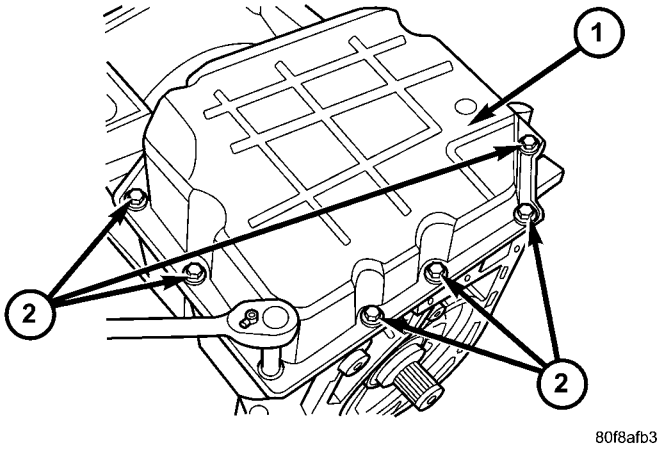

Fig. 322 Install Transmission Oil Pan Bolts

1 - TRANSMISSION OIL PAN
2 - BOLTS

AUTOMATIC TRANSMISSION - 545RFE

TABLE OF CONTENTS

page

AUTOMATIC TRANSMISSION - 545RFE
DESCRIPTION 169
OPERATION 170
DIAGNOSIS AND TESTING
AUTOMATIC TRANSMISSION 171
PRELIMINARY 171
ROAD TESTING 171
HYDRAULIC PRESSURE TEST 172
AIR CHECKING TRANSMISSION CLUTCH OPERATION 173
CONVERTER HOUSING FLUID LEAK 174
STANDARD PROCEDURE - ALUMINUM THREAD REPAIR 174
REMOVAL 174
DISASSEMBLY 177
CLEANING 183
INSPECTION 183
ASSEMBLY 184
INSTALLATION 191
SCHEMATICS AND DIAGRAMS
HYDRAULIC SCHEMATICS 194
SPECIFICATIONS
TRANSMISSION 215
SPECIAL TOOLS
AUTOMATIC TRANSMISSION - RFE 216
4C RETAINER/BULKHEAD
DISASSEMBLY 219
ASSEMBLY 220
ADAPTER HOUSING SEAL
REMOVAL 222
INSTALLATION 222
BRAKE TRANSMISSION SHIFT INTERLOCK SYSTEM
DESCRIPTION 222
OPERATION 222
DIAGNOSIS AND TESTING - BRAKE TRANSMISSION SHIFT INTERLOCK SYSTEM 223
FLUID AND FILTER
DIAGNOSIS AND TESTING
EFFECTS OF INCORRECT FLUID LEVEL . . 223
CAUSES OF BURNT FLUID 223
FLUID CONTAMINATION 223
STANDARD PROCEDURE
FLUID LEVEL CHECK 224
FLUID AND FILTER REPLACEMENT 224
TRANSMISSION FILL 225

page

GEARSHIFT CABLE
DIAGNOSIS AND TESTING GEARSHIFT CABLE 226
REMOVAL 226
INSTALLATION 226
ADJUSTMENTS - GEARSHIFT CABLE 228
HOLDING CLUTCHES
DESCRIPTION 228
OPERATION 228
INPUT CLUTCH ASSEMBLY
DESCRIPTION 230
OPERATION 230
DISASSEMBLY 232
ASSEMBLY 235
INPUT SPEED SENSOR
DESCRIPTION 240
OPERATION 240
REMOVAL 241
INSTALLATION 241
LINE PRESSURE (LP) SENSOR
DESCRIPTION 241
OPERATION 242
REMOVAL 242
INSTALLATION 242
LOW/REVERSE CLUTCH
DISASSEMBLY 243
CLEANING 244
INSPECTION 244
ASSEMBLY 244
OIL PUMP
DESCRIPTION 247
OPERATION 247
STANDARD PROCEDURE - OIL PUMP VOLUME CHECK 248
DISASSEMBLY 249
CLEANING 251
INSPECTION 251
ASSEMBLY 251
OIL PUMP FRONT SEAL
REMOVAL 255
INSTALLATION 255
OUTPUT SPEED SENSOR
DESCRIPTION 255
OPERATION 255
REMOVAL 255
INSTALLATION 256
OVERDRIVE SWITCH
DESCRIPTION 256
OPERATION 256

PARK INTERLOCK CABLE
REMOVAL 256
INSTALLATION 256
ADJUSTMENTS - PARK-INTERLOCK CABLE . 257
PLANETARY GEARTRAIN
DESCRIPTION 258
OPERATION 258
DISASSEMBLY 261
CLEANING 261
INSPECTION 261
ASSEMBLY 261
SHIFT MECHANISM
DESCRIPTION 262
OPERATION 262
REMOVAL 263
INSTALLATION 263
SOLENOID SWITCH VALVE
DESCRIPTION 264
OPERATION 264
TORQUE CONVERTER
DESCRIPTION 264
OPERATION 268
REMOVAL 269
INSTALLATION 269
TRANSMISSION CONTROL RELAY
DESCRIPTION 270
OPERATION 270
TRANSMISSION RANGE SENSOR
DESCRIPTION 270
OPERATION 270
TRANSMISSION SOLENOID/TRS ASSEMBLY
DESCRIPTION 271
OPERATION 271
REMOVAL 271
INSTALLATION 272
TRANSMISSION TEMPERATURE SENSOR
DESCRIPTION 272
OPERATION 272
VALVE BODY
DESCRIPTION 273
OPERATION 274
REMOVAL 274
DISASSEMBLY 275
CLEANING 277
INSPECTION 277
ASSEMBLY 279
INSTALLATION 281

AUTOMATIC TRANSMISSION - 545RFE

DESCRIPTION

The 545RFE automatic transmission is a sophisticated, multi-range, electronically controlled transmission which combines optimized gear ratios for responsive performance, state of the art efficiency features and low NVH. Other features include driver adaptive shifting and three planetary gear sets to provide wide ratio capability with precise ratio steps for optimum driveability. The three planetary gear sets also make available a unique alternate second gear ratio. The primary 2nd gear ratio fits between 1st and 3rd gears for normal through-gear accelerations. The alternate second gear ratio (2prime) allows smoother 4-2 kickdowns at high speeds to provide 2nd gear passing performance over a wider highway cruising range. An additional overdrive ratio (0.67:1) is also provided for greater fuel economy and less NVH at highway speeds.

The hydraulic portion of the transmission consists of the transmission fluid, fluid passages, hydraulic valves, and various line pressure control components.

The primary mechanical components of the transmission consist of the following:

- Three multiple disc input clutches
- Three multiple disc holding clutches
- Five hydraulic accumulators
- Three planetary gear sets
- Dual Stage Hydraulic oil pump
- Valve body
- Solenoid pack

The Transmission Control Module (TCM) is the “heart” or “brain” of the electronic control system and relies on information from various direct and indirect inputs (sensors, switches, etc.) to determine driver demand and vehicle operating conditions. Depending on the vehicle configuration, the TCM may be a standalone module or it it may be housed along with the Powertrain Control Module (PCM) in a single module. With this information, the TCM can calculate and perform timely and quality shifts through various output or control devices (solenoid pack, transmission control relay, etc.).

TRANSMISSION IDENTIFICATION

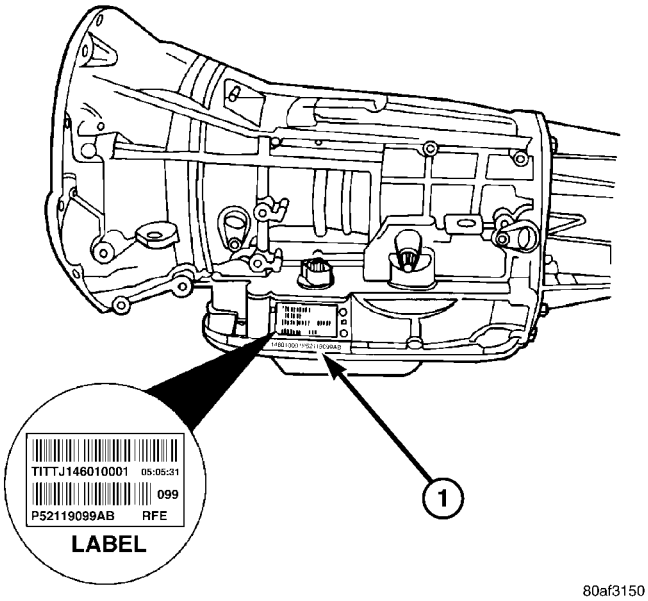

Fig. 1 Transmission Part And Serial Number Location

1 - IDENTIFICATION NUMBERS (STAMPED)

Transmission identification numbers (1) are stamped on the left side of the case just above the oil pan sealing surface (Fig. 1). Refer to this information when ordering replacement parts. A label is attached to the transmission case above the stamped numbers. The label gives additional information which may also be necessary for identification purposes.

GEAR RATIOS

The 545RFE gear ratios are:

1st	3.00:1
2nd	1.67:1
2nd Prime	1.50:1
3rd	1.00:1
4th	0.75:1
5th	0.67:1
Reverse	3.00:1

OPERATION

The 545RFE offers full electronic control of all automatic up and downshifts, and features real-time adaptive closed-loop shift and pressure control. Electronic shift and torque converter clutch controls help protect the transmission from damage due to high temperatures, which can occur under severe operating conditions. By altering shift schedules, line pressure, and converter clutch control, these controls reduce heat generation and increase transmission cooling.

To help reduce efficiency-robbing parasitic losses, the transmissions includes a dual-stage transmission fluid pump with electronic output pressure control. Under most driving conditions, pump output capacity greatly exceeds that which is needed to keep the clutches applied. The 45RFE/545RFE pump-pressure control system monitors input torque and adjusts the pump pressure accordingly. The primary stage of the pump works continuously; the second stage is bypassed when demand is low. The control system also monitors input and output speed and, if incipient clutch slip is observed, the pressure control solenoid duty cycle is varied, increasing pressure in proportion to demand.

A high-travel torque converter damper assembly allows earlier torque converter clutch engagement to reduce slippage. Needle-type thrust bearings reduce internal friction. The 45RFE/545RFE is packaged in a one-piece die-cast aluminum case. To reduce NVH, the case has high lateral, vertical and torsional stiffness. It is also designed to maximize the benefit of the structural dust cover that connects the bottom of the bell housing to the engine bedplate, enhancing overall power train stiffness. Dual filters protect the pump and other components. A cooler return filter is added to the customary main sump filter. Independent lubrication and cooler circuits assure ample pressure for normal transmission operation even if the cooler is obstructed or the fluid cannot flow due to extremely low temperatures.

The hydraulic control system design (without electronic assist) provides the transmission with PARK, REVERSE, NEUTRAL, SECOND, and THIRD gears, based solely on driver shift lever selection. This design allows the vehicle to be driven (in “limp-in” mode) in the event of a electronic control system failure, or a situation that the Transmission Control Module (TCM) recognizes as potentially damaging to the transmission.

The TCM also performs certain self-diagnostic functions and provides comprehensive information (sensor data, DTC’s, etc.) which is helpful in proper diagnosis and repair. This information can be viewed with the scan tool.

AUTOMATIC TRANSMISSION - 545RFE (Continued)

DIAGNOSIS AND TESTING

AUTOMATIC TRANSMISSION

CAUTION: Before attempting any repair on a 545RFE automatic transmission, check for Diagnostic Trouble Codes with the DRB® scan tool.

Transmission malfunctions may be caused by these general conditions:

- Poor engine performance
- Improper adjustments
- Hydraulic malfunctions
- Mechanical malfunctions
- Electronic malfunctions

Diagnosis of these problems should always begin by checking the easily accessible variables: fluid level and condition, gearshift cable adjustment. Then perform a road test to determine if the problem has been corrected or if more diagnosis is necessary. If the problem persists after the preliminary tests and corrections are completed, hydraulic pressure checks should be performed.

PRELIMINARY

Two basic procedures are required. One procedure for vehicles that are drivable and an alternate procedure for disabled vehicles (will not back up or move forward).

VEHICLE IS DRIVABLE

(1) Check for transmission fault codes using scan tool.

(2) Check fluid level and condition.

(3) Adjust gearshift cable if complaint was based on delayed, erratic, or harsh shifts.

(4) Road test and note how transmission upshifts, downshifts, and engages.

(5) Perform hydraulic pressure test if shift problems were noted during road test.

(6) Perform air-pressure test to check clutch operation.

VEHICLE IS DISABLED

(1) Check fluid level and condition.

(2) Check for broken or disconnected gearshift cable.

(3) Check for cracked, leaking cooler lines, or loose or missing pressure-port plugs.

(4) Raise and support vehicle on safety stands, start engine, shift transmission into gear, and note following:

(a) If propeller shaft turns but wheels do not, problem is with differential or axle shafts.

(b) If propeller shaft does not turn and transmission is noisy, stop engine. Remove oil pan, and check for debris. If pan is clear, remove transmission and check for damaged driveplate, converter, oil pump, or input shaft.

(c) If propeller shaft does not turn and transmission is not noisy, perform hydraulic-pressure test to determine if problem is hydraulic or mechanical.

ROAD TESTING

Before road testing, be sure the fluid level and control cable adjustments have been checked and adjusted if necessary. Verify that all diagnostic trouble codes have been resolved.

Observe engine performance during the road test. A poorly tuned engine will not allow accurate analysis of transmission operation.

Operate the transmission in all gear ranges. Check for shift variations and engine flare which indicates slippage. Note if shifts are harsh, spongy, delayed, early, or if part throttle downshifts are sensitive.

Slippage indicated by engine flare, usually means clutch, overrunning clutch, or line presure problems.

A slipping clutch can often be determined by comparing which internal units are applied in the various gear ranges. The Clutch Application chart provides a basis for analyzing road test results.

AUTOMATIC TRANSMISSION - 545RFE (Continued)

545RFE CLUTCH APPLICATION CHART

SLP	UD	OD	R	2C	4C	L/R	OVERRUNNING
P–PARK						ON	
R–REVERSE			ON			ON	
N-NEUTRAL						ON	
D–FIRST	ON					ON*	ON
D–SECOND	ON			ON			
D–SECOND PRIME	ON				ON		
D–THIRD	ON	ON					
D–FOURTH		ON			ON		
D–FIFTH		ON		ON			
D–LIMP-IN	ON	ON					
2–FIRST	ON					ON*	ON
2–SECOND	ON			ON			
2–LIMP-IN	ON			ON			
1–LOW	ON					ON	ON

*L/R clutch is on only with the output shaft speed below 150 rpm.

HYDRAULIC PRESSURE TEST

An accurate tachometer and pressure test gauges are required. Test Gauge C-3293-SP has a 300 psi range and is used at all locations where pressures exceed 100 psi.

Pressure Test Port Locations

Only two pressure ports are supplied on the transmission case. The torque converter clutch apply and release ports are located on the right side of the transmission case (Fig. 2).

To determine the line pressure, there are two available methods. The DRB® scan tool can be used to read line pressure from the line pressure sensor. The second method is to install Line Pressure Adapter 8259 (Fig. 4) into the transmission case and then install the pressure gauge and the original sensor into the adapter. This will allow a comparison of the DRB® readings and the gauge reading to determe the accuracy of the line pressure sensor. The DRB® line pressure reading should match the gauge reading within ±10 psi.

In order to access any other pressure tap locations, the transmission oil pan must be removed, the pressure port plugs removed and Valve Body Pressure Tap Adapter 8258-A (Fig. 5) installed. The extensions supplied with Adapter 8258-A will allow the installation of pressure gauges to the valve body. Refer to (Fig. 3) for correct pressure tap location identification.

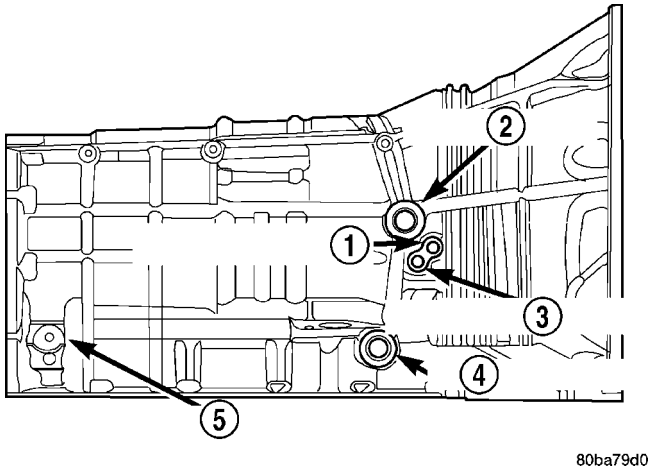

Fig. 2 Torque Converter Pressure Locations

1 - TCC RELEASE
2 - TO COOLER
3 - TCC APPLY
4 - FROM COOLER
5 - LINE PRESSURE SENSOR

TEST PROCEDURE

All pressure readings should be taken with the transmission fluid level full, transmission oil at the normal operating temperature, and the engine at 1500 rpm. Check the transmission for proper operation in each gear position that is in question or if a specific element is in question, check the pressure readings in at least two gear positions that employ that element. Refer to the Hydraulic Schematics at

AUTOMATIC TRANSMISSION - 545RFE (Continued)

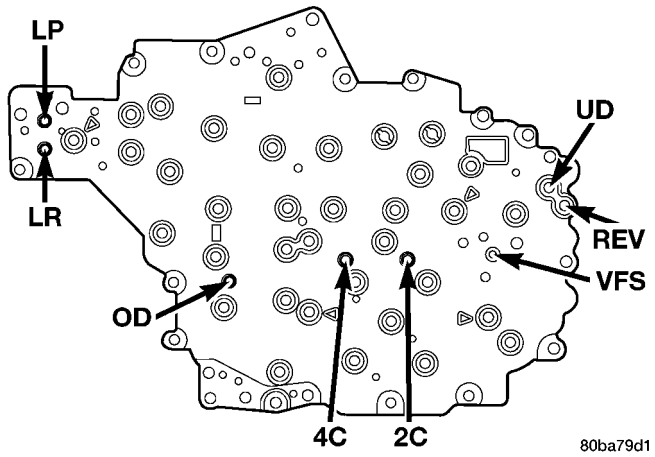

Fig. 3 Pressure Tap Locations

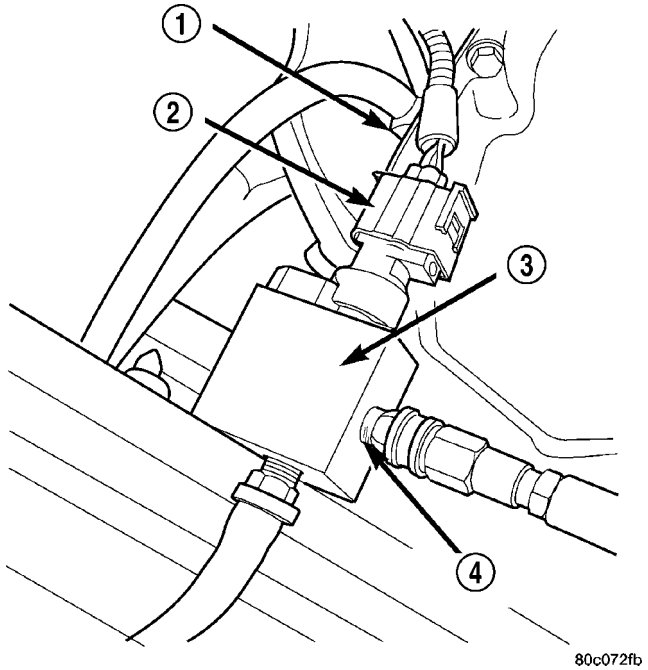

Fig. 4 Line Pressure Adapter 8259

1 - LINE PRESSURE SENSOR PORT
2 - LINE PRESSURE SENSOR
3 - TOOL 8259
4 - PRESSURE TAP

the rear of this section to determine the correct pressures for each element in a given gear position.

NOTE: The 545RFE utilizes closed loop control of pump line pressure. The pressure readings may therefore vary greatly but should always follow line pressure.

Some common pressures that can be measured to evaluate pump and clutch performance are the upshift/downshift pressures and the garage shift pressures. The upshift/downshift pressure for all

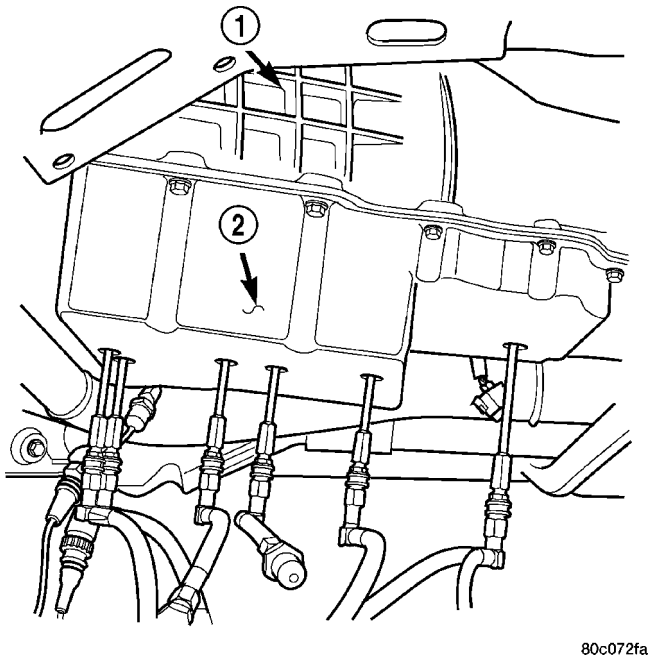

Fig. 5 Valve Body Pressure Tap Adapter 8258-A

1 - 545RFE TRANSMISSION
2 - TOOL 8258-A

shifts except the 4-5 shift is 120 psi. The upshift pressure for the 4-5 shift is 130 psi. The garage shift pressure when performing a N-R shift is 220 psi. The garage shift pressure for the R-N and N-1 shifts is 120 psi.

AIR CHECKING TRANSMISSION CLUTCH OPERATION

Air-pressure testing can be used to check transmission clutch operation. The test can be conducted with the transmission either in the vehicle or on the work bench, as a final check.

Air-pressure testing requires that the oil pan and valve body be removed from the transmission. The clutch apply passages are shown in the Air Pressure Test Passages graphic (Fig. 6).

NOTE: The air supply which is used must be free of moisture and dirt. Use a pressure of 30 psi to test clutch operation.

Apply air pressure at each port. If the clutch is functioning, a soft thump will be heard as the clutch is applied. The clutch application can also be felt by touching the appropriate element while applying air pressure. As the air pressure is released, the clutch should also release.

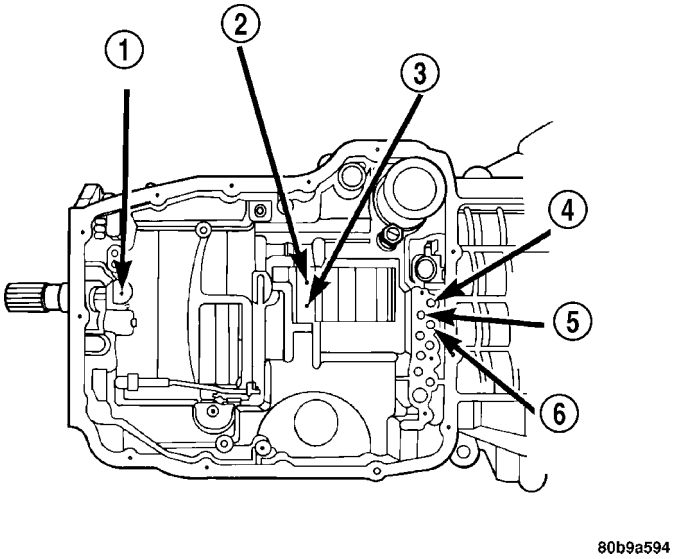

Fig. 6 Air Pressure Test Passages

1 - LOW REVERSE CLUTCH
2 - 4TH CLUTCH
3 - 2ND CLUTCH
4 - OVERDRIVE CLUTCH
5 - UNDERDRIVE CLUTCH
6 - REVERSE CLUTCH

CONVERTER HOUSING FLUID LEAK

When diagnosing converter housing fluid leaks, two items must be established before repair.

(1) Verify that a leak condition actually exists.

(2) Determined the true source of the leak.

Some suspected converter housing fluid leaks may not be leaks at all. They may only be the result of residual fluid in the converter housing, or excess fluid spilled during factory fill or fill after repair. Converter housing leaks have several potential sources. Through careful observation, a leak source can be identified before removing the transmission for repair. Torque converter seal leaks tend to move along the drive hub and onto the rear of the converter. Pump cover seal leaks tend to run down the cover and the inside surface of the bellhousing.

Some leaks, or suspected leaks, may be particularly difficult to locate. If necessary, a Mopar® approved dye should be used to locate and confirm a leak.

TORQUE CONVERTER LEAK POINTS

Possible sources of converter leaks are:

(1) Leaks at the weld joint around the outside diameter weld (Fig. 7).

(2) Leaks at the converter hub weld (Fig. 7).

In most cases, a torque converter which is wet from transmission fluid indicates a leak at one of these areas.

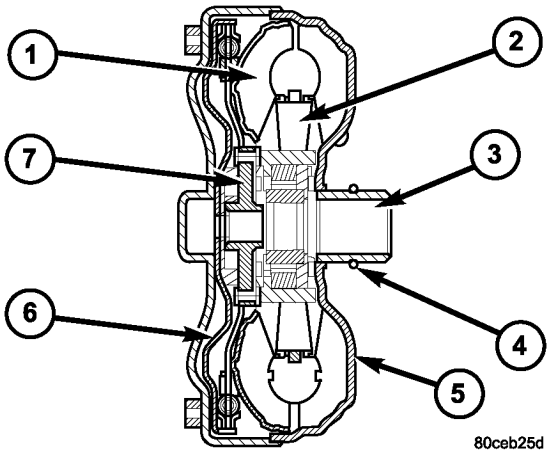

Fig. 7 Torque Converter Assembly

1 - TURBINE ASSEMBLY
2 - STATOR
3 - CONVERTER HUB
4 - O-RING
5 - IMPELLER ASSEMBLY
6 - CONVERTER CLUTCH PISTON
7 - TURBINE HUB

STANDARD PROCEDURE - ALUMINUM THREAD REPAIR

Damaged or worn threads in the aluminum transmission case and valve body can be repaired by the use of Heli-Coils™, or equivalent. This repair consists of drilling out the worn-out damaged threads. Then tap the hole with a special Heli-Coil™ tap, or equivalent, and installing a Heli-Coil™ insert, or equivalent, into the hole. This brings the hole back to its original thread size.

Heli-Coil™, or equivalent, tools and inserts are readily available from most automotive parts suppliers.

REMOVAL

(1) Disconnect the negative battery cable.

(2) Raise and support the vehicle

(3) Remove any necessary skid plates (Fig. 8). (Refer to 13 - FRAMES & BUMPERS/FRAME/TRANSFER CASE SKID PLATE - REMOVAL)

(4) Mark propeller shaft and axle companion flanges for assembly alignment.

(5) Remove the rear propeller shaft. (Refer to 3 - DIFFERENTIAL & DRIVELINE/PROPELLER SHAFT/PROPELLER SHAFT - REMOVAL)

(6) Remove the front propeller shaft, if necessary. (Refer to 3 - DIFFERENTIAL & DRIVELINE/PROPELLER SHAFT/PROPELLER SHAFT - REMOVAL)

AUTOMATIC TRANSMISSION - 545RFE (Continued)

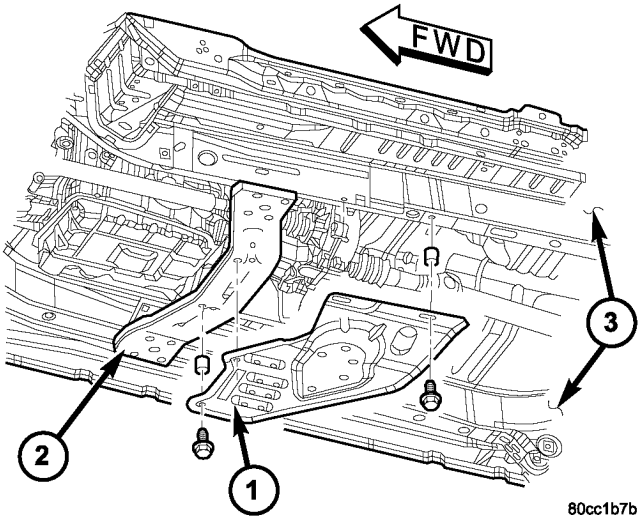

Fig. 8 Remove Skid Plate

1 - SKID PLATE
2 - TRANSMISSION CROSSMEMBER
3 - FRAME RAILS

(7) Disengage the output speed sensor connector from the output speed sensor (Fig. 9).

(8) Disengage the input speed sensor connector from the input speed sensor (Fig. 10).

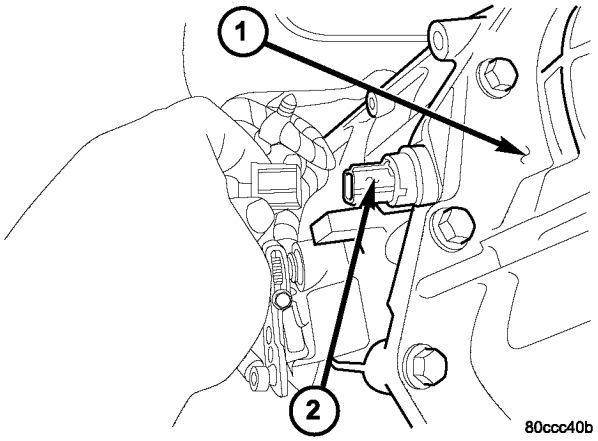

Fig. 9 Disconnect Output Speed Sensor

1 - TRANSMISSION
2 - OUTPUT SPEED SENSOR

(9) Disengage the transmission solenoid/TRS assembly connector from the transmission solenoid/TRS assembly (Fig. 11).

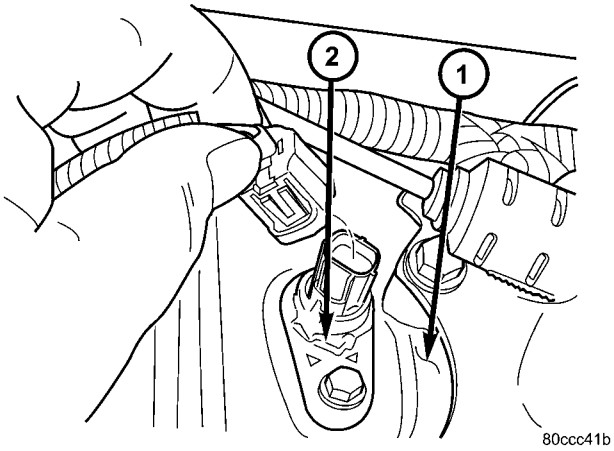

Fig. 10 Disconnect Input Speed Sensor

1 - TRANSMISSION
2 - INPUT SPEED SENSOR

(10) Disengage the line pressure sensor connector from the line pressure sensor (Fig. 12).

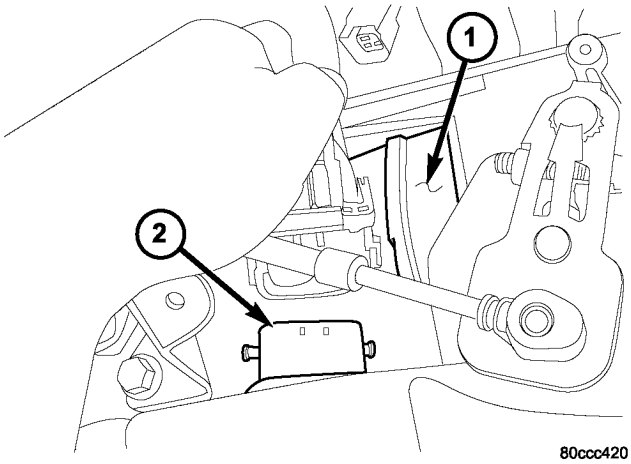

Fig. 11 Disconnect Transmission Solenoid/TRS Assembly

1 - TRANSMISSION
2 - TRANSMISSION SOLENOID/TRS ASSEMBLY

(11) Remove the bolts holding the exhaust cross-over pipe to the pre-catalytic converter pipe flanges (Fig. 13).

AUTOMATIC TRANSMISSION - 545RFE (Continued)

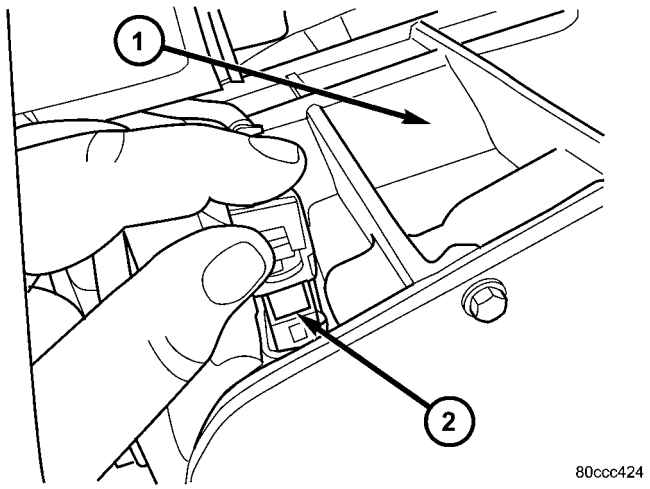

Fig. 12 Disconnect Line Pressure Sensor

1 - TRANSMISSION
2 - LINE PRESSURE SENSOR

(12) Remove the bolts holding the exhaust crossover pipe to the catalytic converter flange.

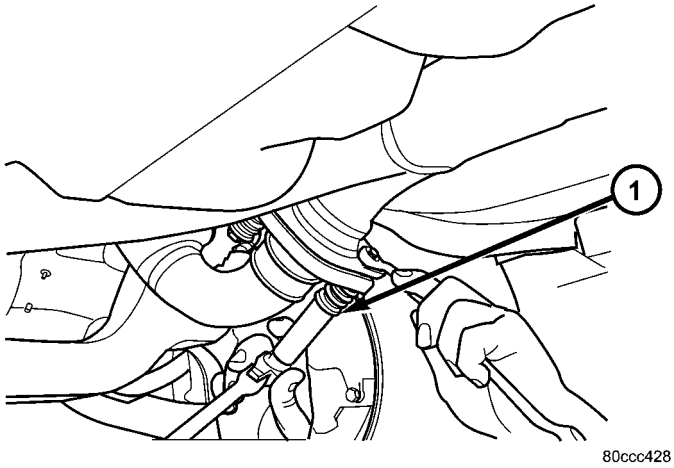

Fig. 13 Remove Exhaust Flange Bolts

1 - EXHAUST FLANGE BOLTS

(13) Disconnect gearshift cable from transmission manual valve lever (Fig. 14).

(14) Disengage the shift cable from the cable support bracket.

(15) Remove the starter motor.

(16) Remove the engine to transmission collar (Fig. 15).

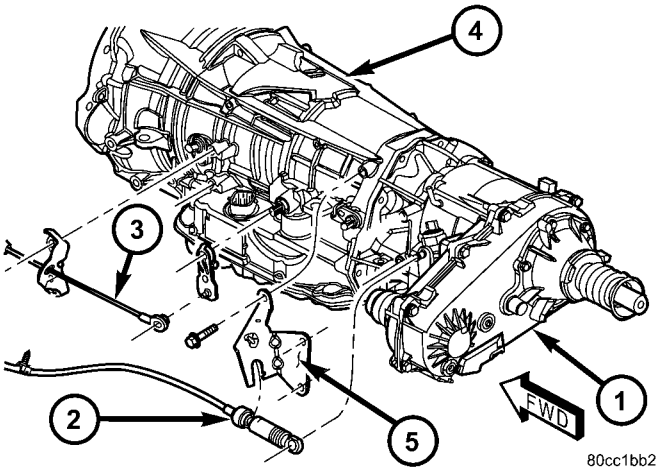

Fig. 14 Remove Shift Cables

1 - TRANSFER CASE
2 - TRANSFER CASE SHIFT CABLE
3 - TRANSMISSION SHIFT CABLE
4 - AUTOMATIC TRANSMISSION
5 - TRANSFER CASE SHIFT CABLE BRACKET

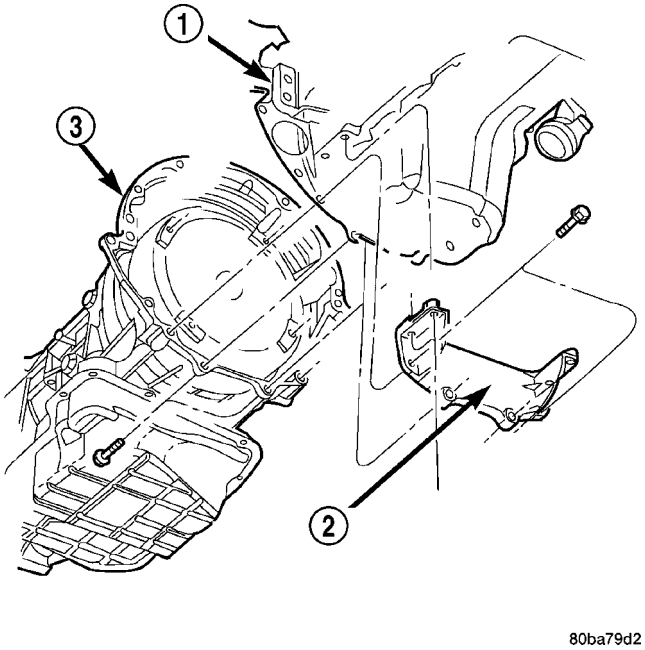

Fig. 15 Transmission Collar

1 - ENGINE
2 - ENGINE TO TRANSMISSION COLLAR
3 - TRANSMISSION

AUTOMATIC TRANSMISSION - 545RFE (Continued)

(17) Rotate crankshaft in clockwise direction until converter bolts are accessible. Then remove bolts one at a time. Rotate crankshaft with socket wrench on dampener bolt.

(18) Disconnect transmission fluid cooler lines at transmission fittings and clips.

(19) Disconnect the transmission vent hose from the transmission.

(20) Remove transfer case.

(21) Support rear of engine with safety stand or jack.

(22) Raise transmission slightly with service jack to relieve load on crossmember and supports.

(23) Remove bolts securing rear support and cushion to transmission and crossmember (Fig. 16).

(24) Remove bolts attaching crossmember to frame and remove crossmember.

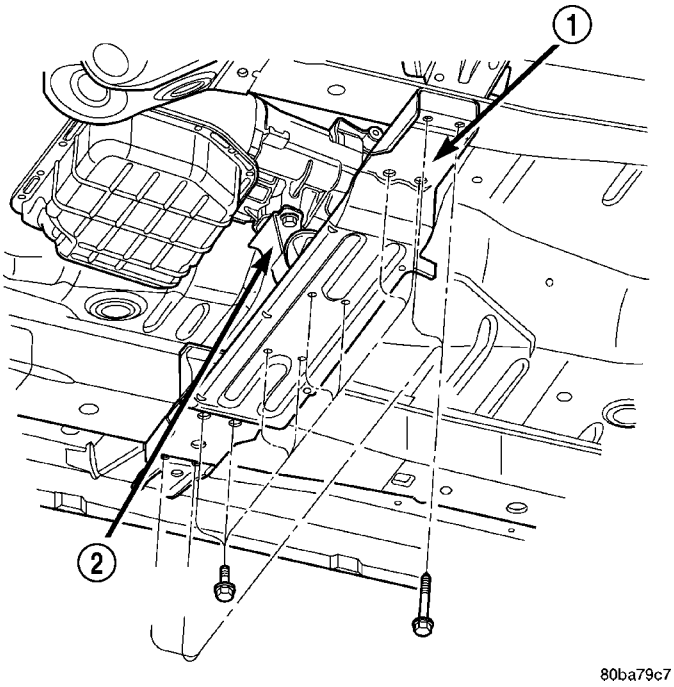

Fig. 16 Rear Transmission Crossmember

1 - CROSSMEMBER
2 - REAR TRANSMISSION MOUNT

(25) Remove all remaining converter housing bolts.

(26) Carefully work transmission and torque converter assembly rearward off engine block dowels.

(27) Hold torque converter in place during transmission removal.

(28) Lower transmission and remove assembly from under the vehicle (Fig. 17).

(29) To remove torque converter, carefully slide torque converter out of the transmission.

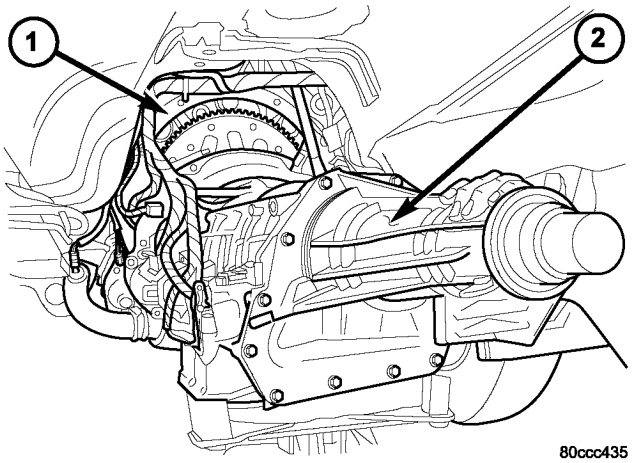

Fig. 17 Remove Transmission

1 - ENGINE
2 - TRANSMISSION

DISASSEMBLY

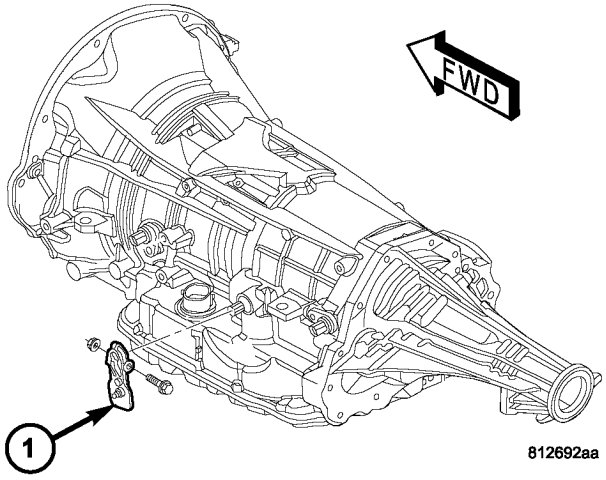

Fig. 18 Remove the Manual Shaft Lever

1 - MANUAL SHAFT LEVER

(1) Drain fluid from transmission.

(2) Clean exterior of transmission with suitable solvent or pressure washer.

(3) Remove the torque converter from the transmission.

(4) Remove the manual shift lever (1) (Fig. 18) from the transmission.

AUTOMATIC TRANSMISSION - 545RFE (Continued)

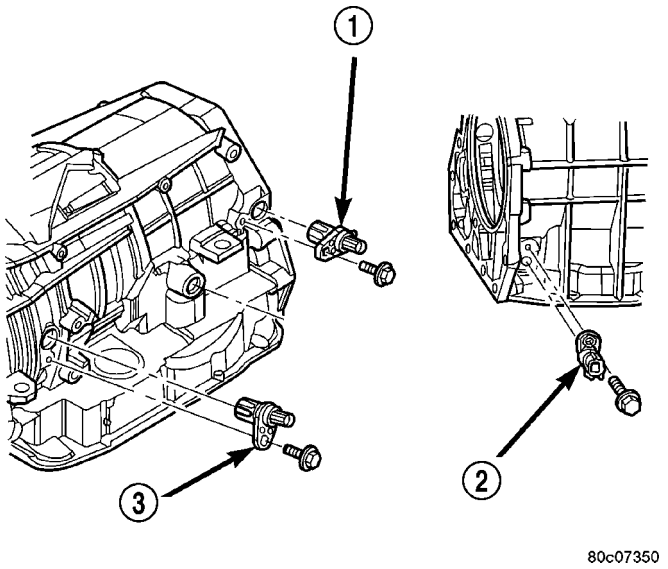

Fig. 19 Remove Input, Output, and Line Pressure Sensors

1 - OUTPUT SPEED SENSOR
2 - LINE PRESSURE SENSOR
3 - INPUT SPEED SENSOR

(5) Remove the input (3), output (1), and line pressure sensors (2) from the transmission case. (Fig. 19)

(6) Inspect the ends of the sensors for debris, which may indicate the nature of the transmission failure.

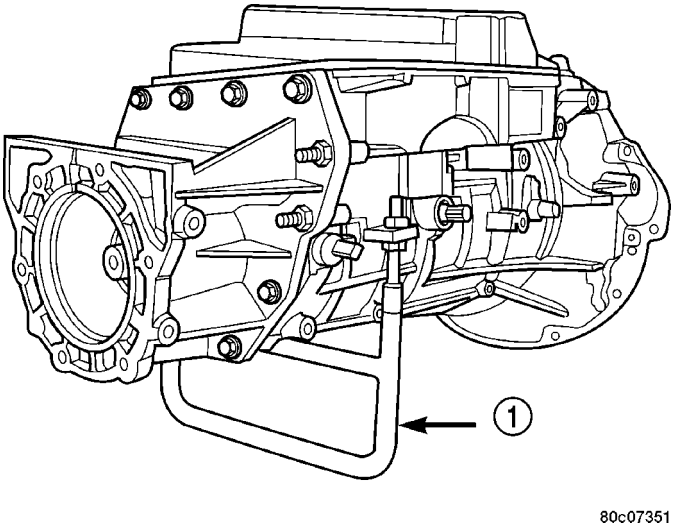

Fig. 20 Install Support Stand - Tool 8257

1 - TOOL 8257

(7) Install Support Stand 8257 (1) onto the transmission case. (Fig. 20)

(8) Using Adapter 8266-1 from End-Play Tool Set 8266 (1) and Dial Indicator C-3339 (2), measure and record the input shaft end-play. (Fig. 21)

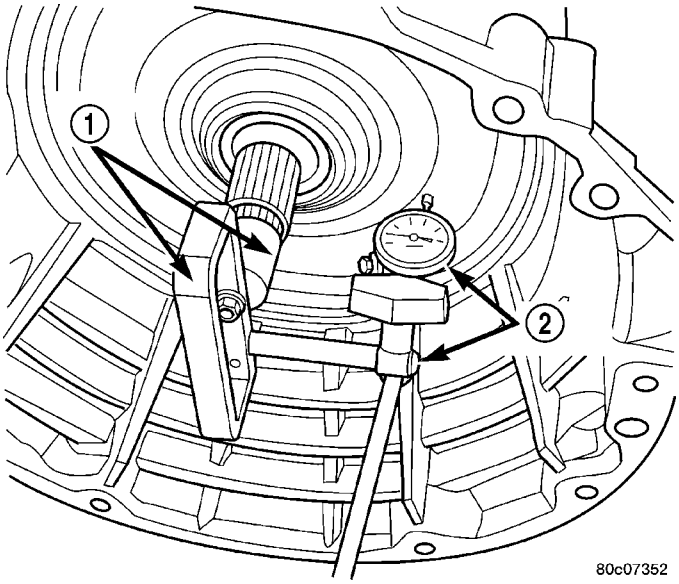

Fig. 21 Measure Input Shaft End Play

1 - TOOL 8266
2 - TOOL C-3339

NOTE: When measuring the input shaft end-play, two ″stops″ will be felt. When the input shaft is pushed inward and the dial indicator zeroed, the first ″stop″ felt when the input shaft is pulled outward is the movement of the input shaft in the input clutch housing hub. This value should not be included in the end-play measured value and therefore must be recorded and subtracted from the dial indicator reading.

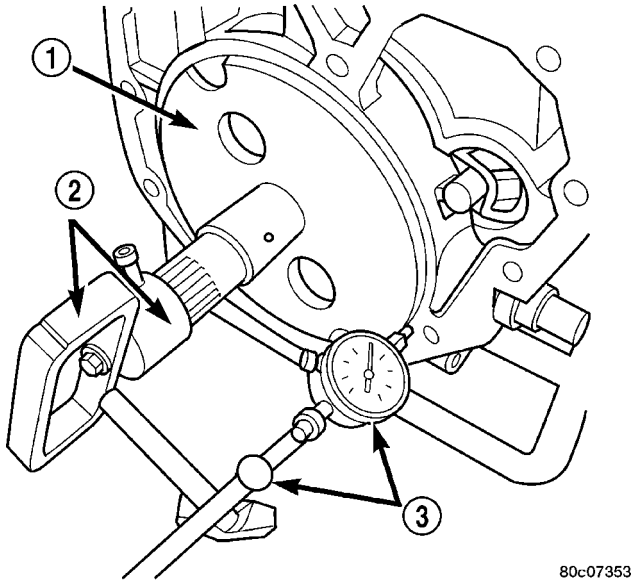

Fig. 22 Measure Output Shaft End Play

1 - TOOL 8261
2 - TOOL 8266
3 - TOOL C-3339

AUTOMATIC TRANSMISSION - 545RFE (Continued)

(9) Remove the bolts holding the transmission extension/adapter housing to the transmission case.

(10) Remove the extension/adapter housing from the transmission case.

(11) Using Alignment Plate 8261 (1), Adapter 8266-17 from End-Play Tool Set 8266 (2) and Dial Indicator C-3339 (3), measure and record the output shaft end-play. (Fig. 22)

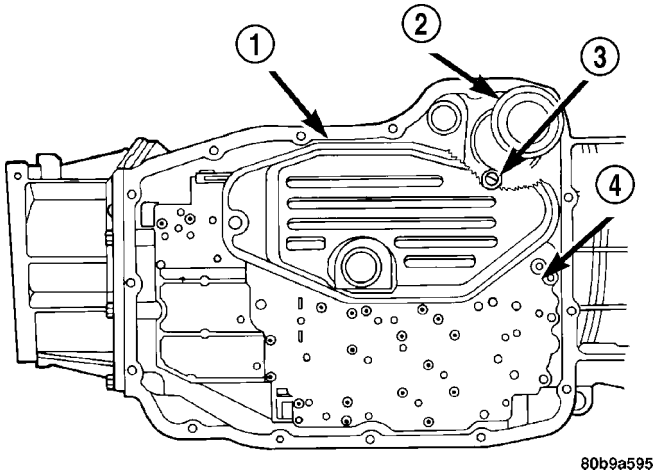

Fig. 23 Remove Primary Oil and Cooler Filters

1 - PRIMARY OIL FILTER
2 - COOLER RETURN FILTER
3 - COOLER RETURN FILTER BYPASS VALVE
4 - VALVE BODY

(12) Remove the bolts holding the transmission oil pan to the transmission case.

(13) Remove the transmission oil pan from the transmission case.

(14) Remove the primary oil filter (1) and the oil cooler return filter (2). (Fig. 23)

(15) Remove the cooler return filter bypass valve (3).

(16) Remove the bolts (1) holding the valve body to the transmission case. (Fig. 24)

(17) Remove the valve body from the transmission case.

(18) Remove the outer snap-ring (3) securing the transmission front cover (2) into the transmission case. (Fig. 25)

(19) Remove the inner snap-ring (1) securing the transmission front cover to the oil pump. (Fig. 25)

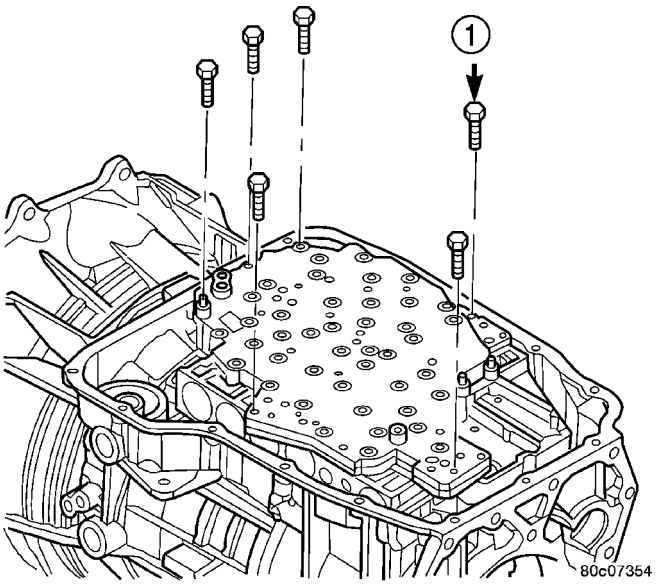

Fig. 24 Remove Valve Body Assembly

1 - VALVE BODY TO CASE BOLT (6)

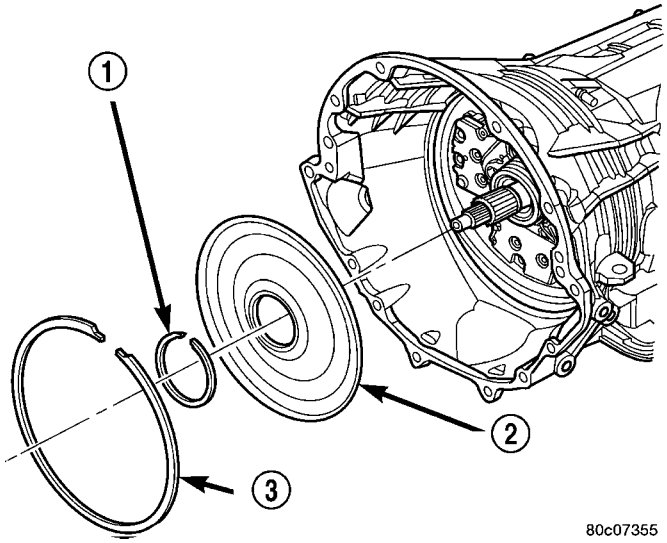

Fig. 25 Remove Transmission Front Cover

1 - INNER SNAP-RING
2 - TRANSMISSION FRONT COVER
3 - OUTER SNAP-RING

AUTOMATIC TRANSMISSION - 545RFE (Continued)

(20) Reaching through a case opening in the valve body area with a long blunted tool, remove the transmission front cover from the transmission case.

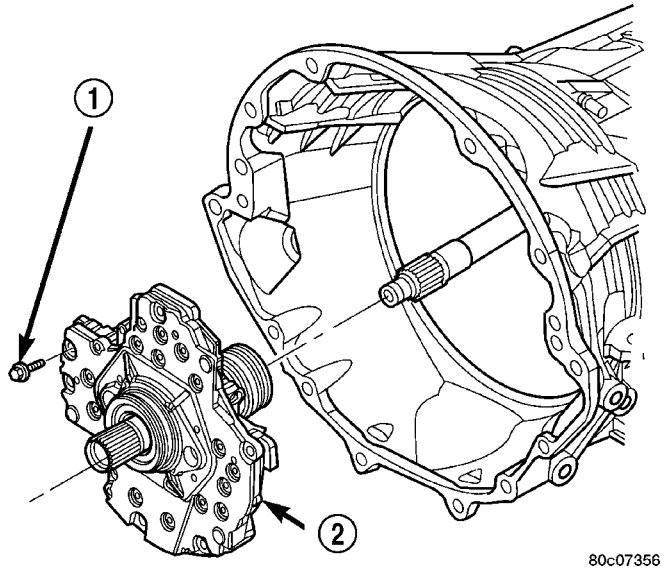

Fig. 26 Remove Oil Pump

1 - OIL PUMP TO CASE BOLT (6)
2 - OIL PUMP

(21) Remove the bolts (1) holding the oil pump into the transmission case. (Fig. 26)

(22) Remove the oil pump (2). Hold inward on the input shaft to prevent pulling the input clutch assembly with the oil pump. (Fig. 26)

CAUTION: If the input shaft is not held during oil pump removal, the input clutch assembly will attempt to move forward with the oil pump and the numbers 2, 3, or 4 bearings inside the input clutch assembly may become dislodged.

(23) Remove the number 1 thrust bearing (4) from the input clutch assembly. (Fig. 27)

(24) Remove the input clutch assembly (3) from the transmission case. (Fig. 27)

(25) Remove the number 5 thrust bearing (1) and selective thrust plate (2) from the input clutch assembly (3) (Fig. 27), or the 4C clutch retainer/bulkhead.

(26) Remove the 4C clutch retainer/bulkhead tapered snap-ring (1) from the transmission case. (Fig. 28)

(27) Remove the 4C clutch retainer/bulkhead (2) from the transmission case. (Fig. 28)

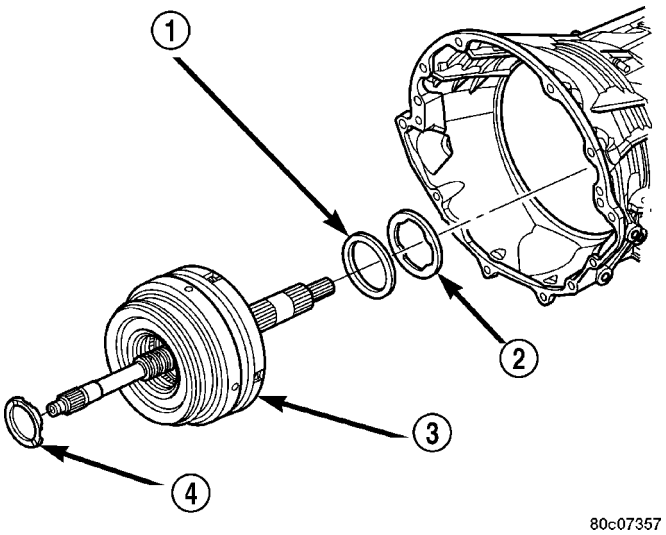

Fig. 27 Remove Input Clutch Assembly

1 - THRUST BEARING NUMBER 5
2 - THRUST PLATE (SELECT)
3 - INPUT CLUTCH ASSEMBLY
4 - THRUST BEARING NUMBER 1

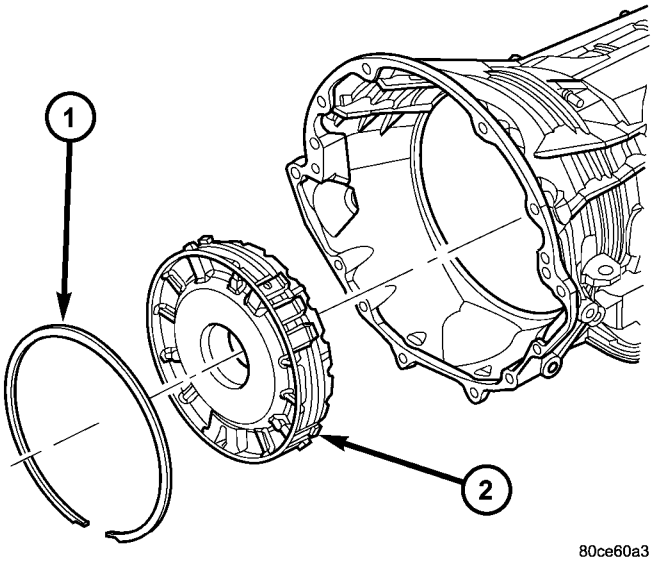

Fig. 28 Remove 4C Clutch Retainer/Bulkhead

1 - SNAP-RING
2 - 4C CLUTCH RETAINER/BULKHEAD

AUTOMATIC TRANSMISSION - 545RFE (Continued)

(28) Remove the front 2C clutch pack snap-ring (1) from the transmission case. (Fig. 29)

(29) Remove the 2C clutch pack (2, 3, 4) from the transmission case. (Fig. 29)

(30) Remove the rear selective plate (6) and number 6 thrust bearing (7) from the reaction annulus (8). (Fig. 30)

(31) Remove the reaction annulus (8) from the reaction planetary carrier (3). (Fig. 30)

(32) Remove the number 7 thrust bearing (5). (Fig. 30)

(33) Remove the reaction sun gear (4). (Fig. 30)

(34) Remove the number 8 thrust bearing (1) from the reaction planetary carrier (3). (Fig. 30)

(35) Remove the reaction planetary carrier (3) (Fig. 30). Note that this planetary gear set has three pinion gears.

(36) Remove the number 9 thrust bearing (2) from the reverse planetary gear set. (Fig. 30)

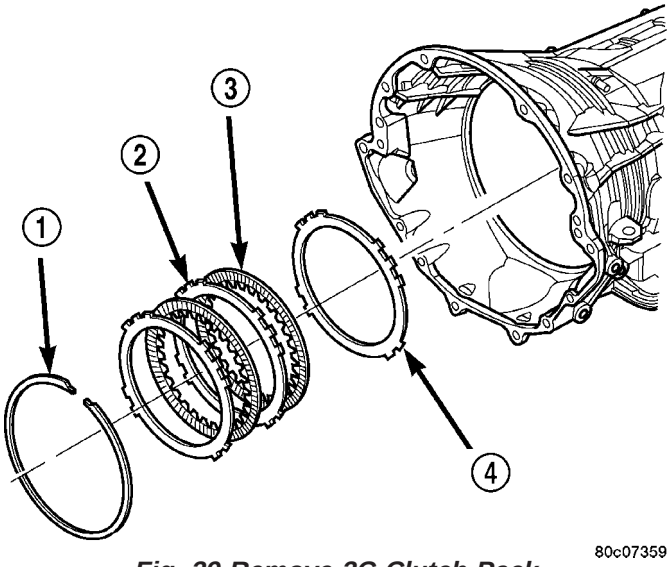

Fig. 29 Remove 2C Clutch Pack

1 - SNAP-RING
2 - PLATE
3 - DISC
4 - REACTION PLATE

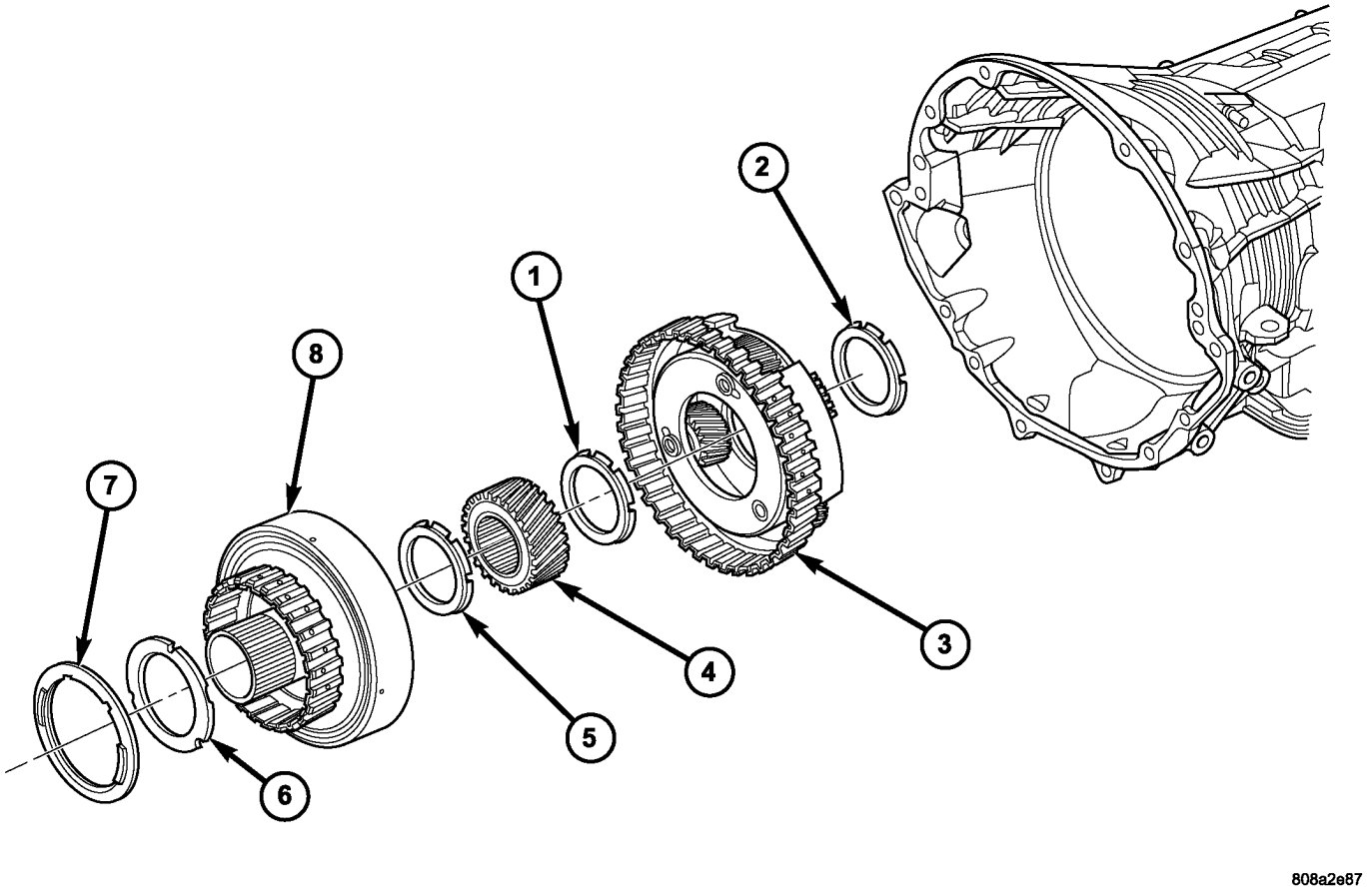

Fig. 30 Remove Reaction Annulus and Carrier

1 - THRUST BEARING NUMBER 8
2 - THRUST BEARING NUMBER 9
3 - REACTION PLANETARY CARRIER
4 - REACTION SUN GEAR
5 - THRUST BEARING NUMBER 7
6 - THRUST PLATE (SELECT)
7 - THRUST BEARING NUMBER 6
8 - REACTION ANNULUS

AUTOMATIC TRANSMISSION - 545RFE (Continued)

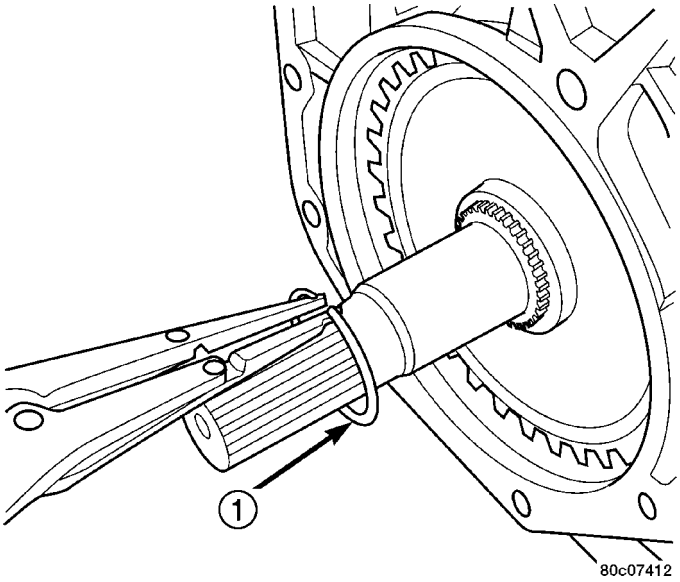

Fig. 31 Remove Park Sprag Snap-Ring

1 - SNAP-RING

(37) Remove the snap-ring (1) holding the park sprag gear onto the output shaft. (Fig. 31)

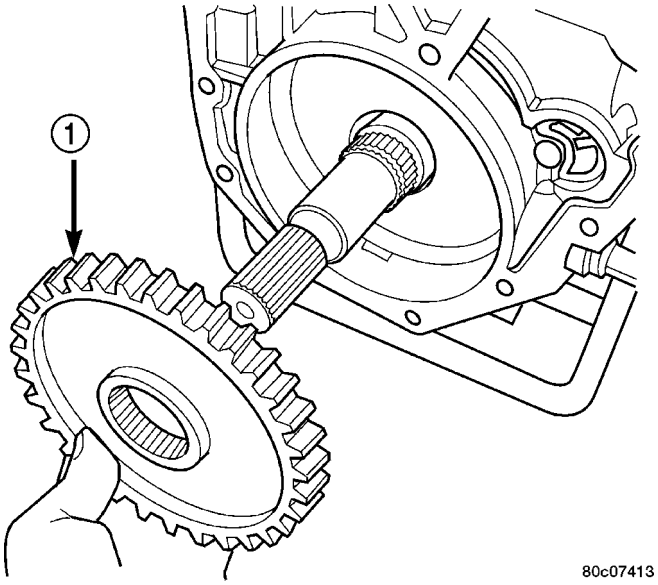

Fig. 32 Remove Park Sprag Gear

1 - PARK SPRAG GEAR

(38) Remove the park sprag gear (1) from the output shaft. (Fig. 32)

(39) Remove the input/reverse planetary assembly (1). (Fig. 33)

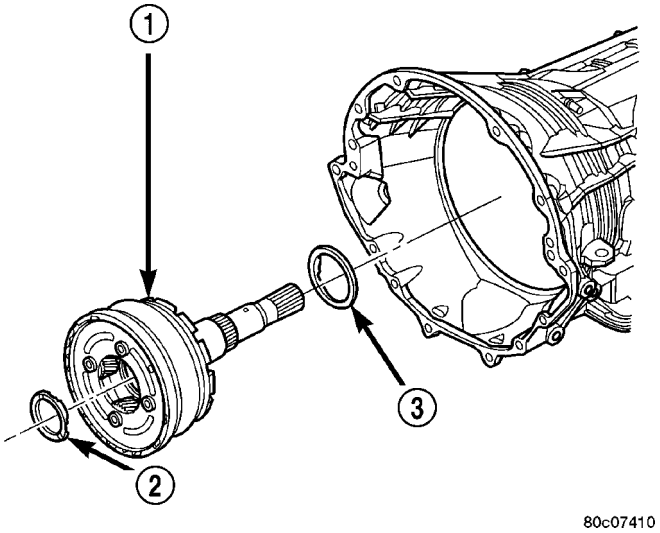

Fig. 33 Remove Input/Reverse Planetary Assembly

1 - INPUT/REVERSE PLANETARY ASSEMBLY
2 - BEARING NUMBER 9
3 - BEARING NUMBER 12

(40) Remove the number 12 thrust bearing (3) from the input/reverse planetary assembly (1). (Fig. 33)

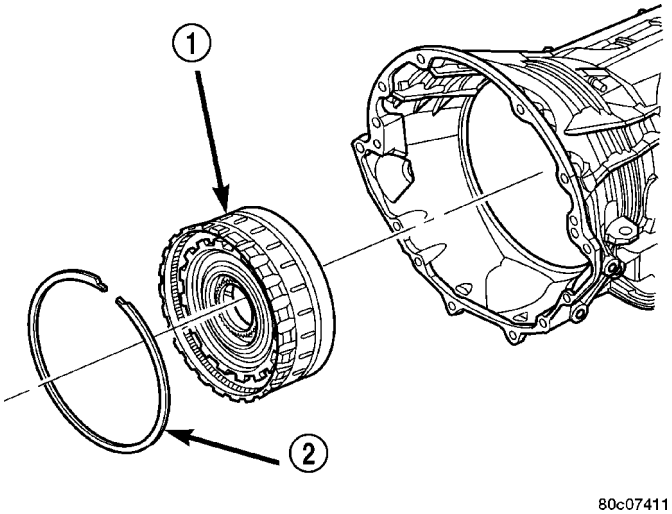

Fig. 34 Remove Low/Reverse Clutch Retainer

1 - LOW/REVERSE OVERRUNNING CLUTCH ASSEMBLY
2 - SNAP-RING

(41) Remove the snap-ring (2) holding the low/reverse clutch retainer (1) into the transmission case. (Fig. 34)

(42) Remove the low/reverse clutch retainer (1) from the transmission case. (Fig. 34)

AUTOMATIC TRANSMISSION - 545RFE (Continued)

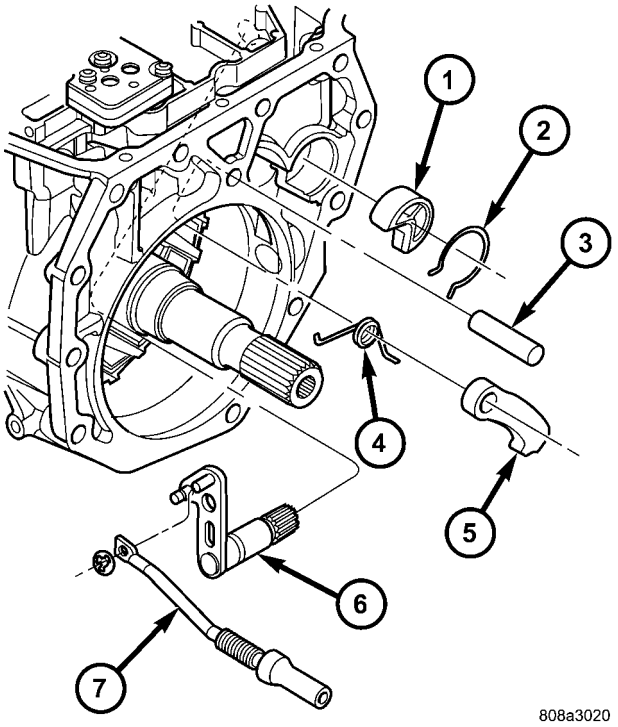

Fig. 35 Manual Shaft/Park Lock Components

1 - GUIDE
2 - SNAP-RING
3 - SHAFT
4 - SPRING
5 - PARK PAWL
6 - MANUAL SHAFT/LEVER
7 - PARK ROD

(43) Remove the park rod (7) and e-clip. (Fig. 35)

(44) Remove the park rod guide snap-ring (2). (Fig. 35)

(45) Remove the park rod guide (1). (Fig. 35)

(46) Remove the park pawl pivot shaft (3), park pawl (5), and spring (4). (Fig. 35)

(47) Remove the manual selector shaft (6). (Fig. 35)

(48) Remove the manual selector shaft seal.

(49) Remove the dipstick tube seal.

CLEANING

The use of crocus cloth is permissible where necessary, providing it is used carefully. When used on shafts, or valves, use extreme care to avoid rounding off sharp edges. Sharp edges are vital as they prevent foreign matter from getting between the valve and valve bore.

Do not reuse oil seals, gaskets, seal rings, or O-rings during overhaul. Replace these parts as a matter of course. Also do not reuse snap rings or E-clips that are bent or distorted. Replace these parts as well.

Lubricate transmission parts with Mopar® ATF +4, Automatic Transmission Fluid, during overhaul and assembly. Use petroleum jelly, Mopar® Door Ease, or Ru-Glyde to prelubricate seals, O-rings, and thrust washers. Petroleum jelly can also be used to hold parts in place during reassembly.

Clean the case in a solvent tank. Flush the case bores and fluid passages thoroughly with solvent. Dry the case and all fluid passages with compressed air. Be sure all solvent is removed from the case and that all fluid passages are clear.

NOTE: Do not use shop towels or rags to dry the case (or any other transmission component) unless they are made from lint-free materials. Lint will stick to case surfaces and transmission components and circulate throughout the transmission after assembly. A sufficient quantity of lint can block fluid passages and interfere with valve body operation.

INSPECTION

Inspect the case for cracks, porous spots, worn bores, or damaged threads. Damaged threads can be repaired with Helicoil® thread inserts. However, the case will have to be replaced if it exhibits any type of damage or wear.

AUTOMATIC TRANSMISSION - 545RFE (Continued)

ASSEMBLY

NOTE: Clean and inspect all components. Replace any components which show evidence of excessive wear or scoring.

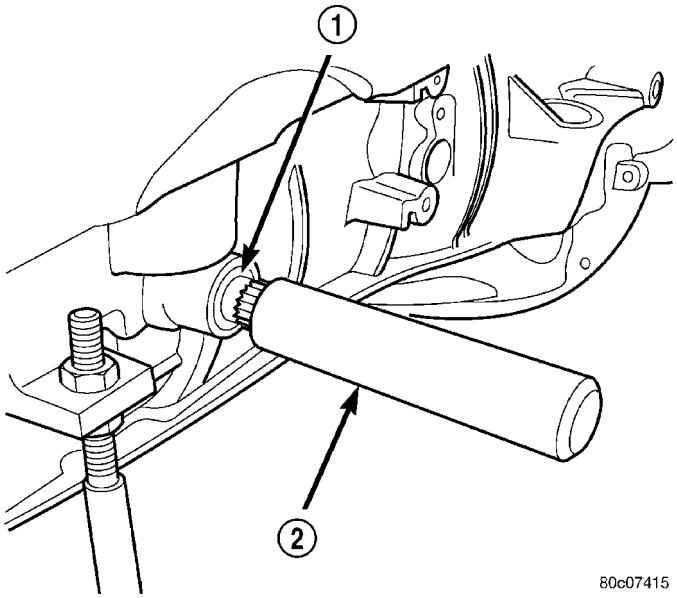

Fig. 36 Install Selector Shaft Seal

1 - SEAL
2 - TOOL 8253

(1) Install the cooler filter bypass valve. Torque the bypass valve to specification. The valve uses a tapered pipe thread and excessive torque can damage the transmission case. Tighten the cooler filter bypass valve to 4.5 N·m (40 in.lbs.).

(2) Install a new selector shaft seal (1) using Seal Installer 8253 (2). (Fig. 36)

(3) Install the manual selector shaft and retaining screw. Tighten the manual selector shaft retaining screw to 28 N·m (250 in.lbs.).

(4) Install the manual shift lever (1) (Fig. 37) onto the manual selector shaft. Torque the retaining cross-bolt to 16 N·m (140 in.lbs.).

(5) Install the park pawl (5), spring (4), and shaft (3). (Fig. 38)

(6) Install the park rod (7) and e-clip. (Fig. 38)

(7) Install the park rod guide (1) and snap-ring (2). (Fig. 38)

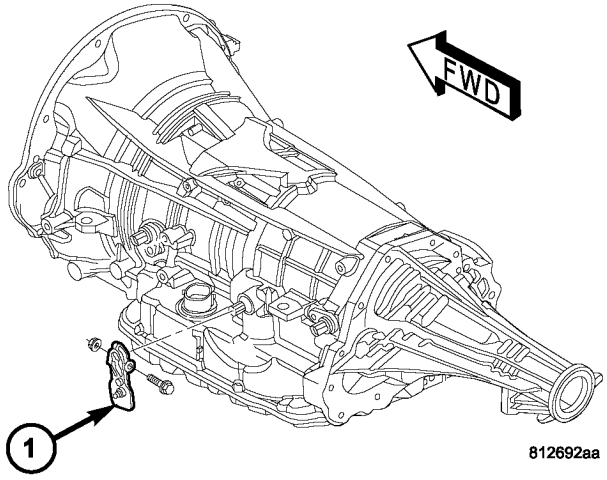

Fig. 37 Remove the Manual Shaft Lever

1 - MANUAL SHAFT LEVER

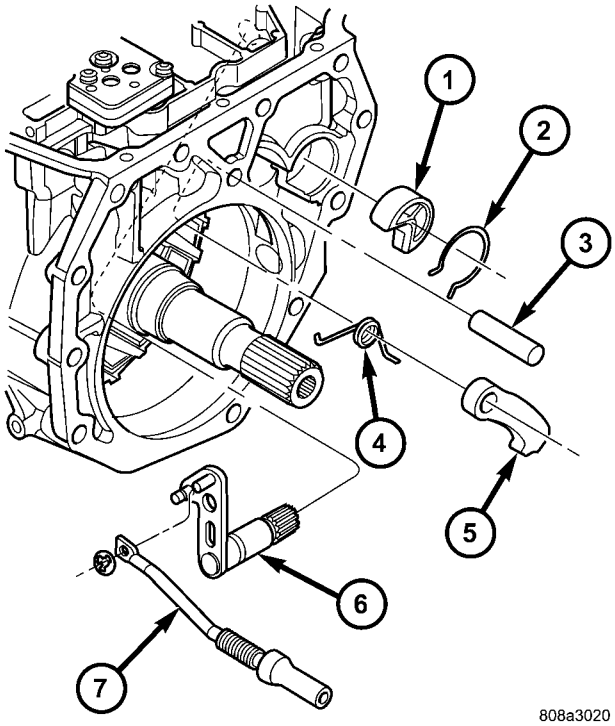

Fig. 38 Manual Shaft/Park Lock Components

1 - GUIDE
2 - SNAP-RING
3 - SHAFT
4 - SPRING
5 - PARK PAWL
6 - MANUAL SHAFT/LEVER
7 - PARK ROD

AUTOMATIC TRANSMISSION - 545RFE (Continued)

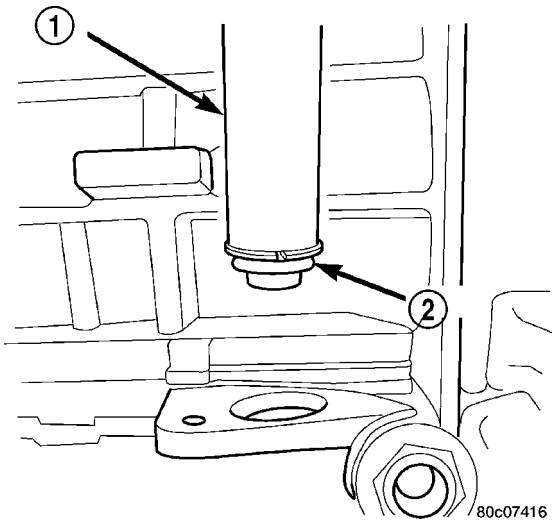

Fig. 39 Install Dipstick Tube Seal Using Tool 8254

1 - TOOL 8254
2 - SEAL

(8) Install a new dipstick tube seal (2) using Seal Installer 8254 (1). (Fig. 39)

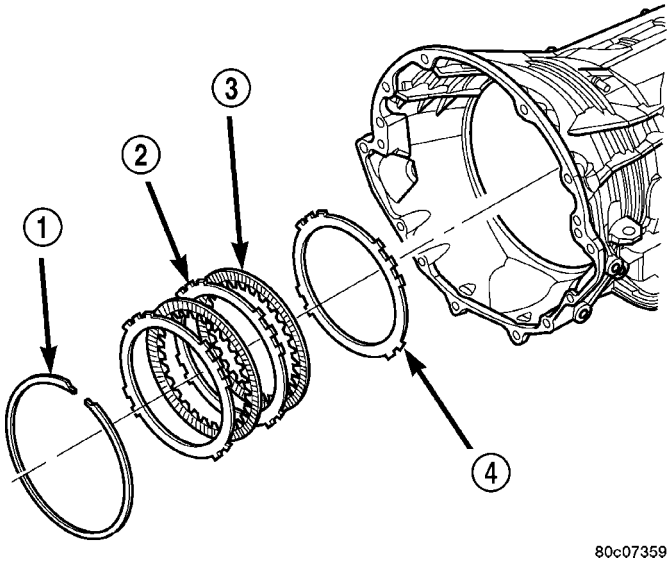

Fig. 40 Install 2C Clutch Pack

1 - SNAP-RING
2 - PLATE
3 - DISC
4 - REACTION PLATE

NOTE: Before final assembly of transmission centerline, the 2C/4C clutch components should be installed into position and measured as follows:

(9) Install the 2C reaction plate (4) into the transmission case. (Fig. 40)

(10) Install the 2C clutch pack (2, 3) into the transmission case. (Fig. 40)

(11) Install the flat 2C clutch snap-ring (1) into the transmission case. (Fig. 40)

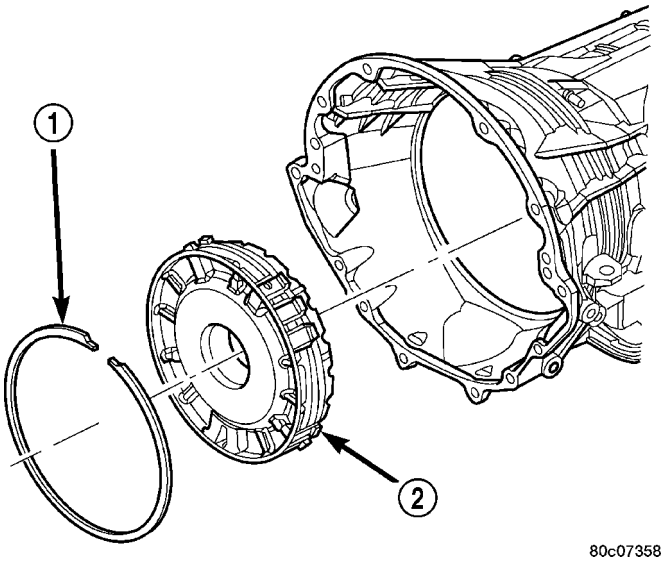

Fig. 41 Install 4C Clutch Retainer/Bulkhead

1 - SNAP-RING
2 - 4C CLUTCH RETAINER/BULKHEAD

(12) Install the 4C retainer/bulkhead (2) (Fig. 41) into the transmission case. Make sure that the oil feed holes are pointing toward the valve body area.

(13) Install the 4C retainer/bulkhead tapered snap-ring (1) into the transmission case. Make sure that the open ends of the snap-ring are located in the case opening toward the valve body area.

(14) Using a feeler gauge through the opening in the rear of the transmission case, measure the 2C clutch pack clearance between the 2C reaction plate and the transmission case at four different points. The average of these measurements is the 2C clutch pack clearance. The correct clutch clearance is 0.455-1.335 mm (0.018-0.053 in.). The reaction plate is not selective. If the clutch pack clearance is not within specification, the reaction plate, all the friction discs, and steels must be replaced.

(15) Remove the 4C retainer/bulkhead and all of the 2C clutch components from the transmission case.

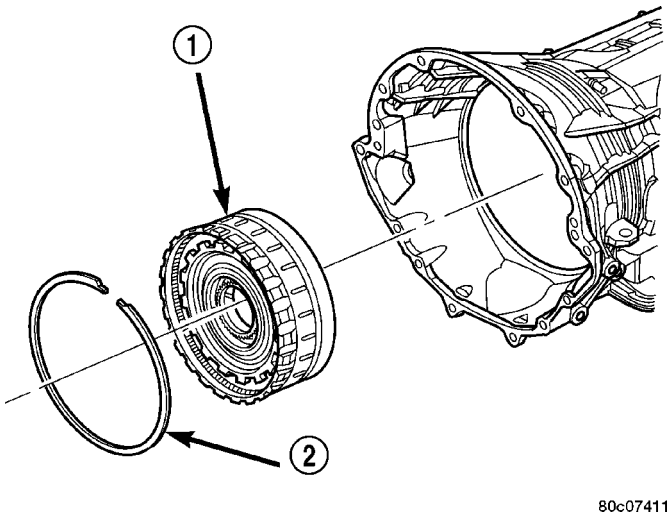

Fig. 42 Install Low/Reverse Clutch Retainer

1 - LOW/REVERSE OVERRUNNING CLUTCH ASSEMBLY
2 - SNAP-RING

(16) Install the low/reverse clutch assembly (1) (Fig. 42). Make sure that the oil feed hole points toward the valve body area and that the bleed orifice is aligned with the notch in the rear of the transmission case.

(17) Install the snap-ring (2) (Fig. 42) to hold the low/reverse clutch retainer into the transmission case. The snap-ring is tapered and must be installed with the tapered side forward. Once installed, verify that the snap-ring is fully seated in the snap-ring groove.

(18) Air check the low/reverse clutch and verify correct overrunning clutch operation.

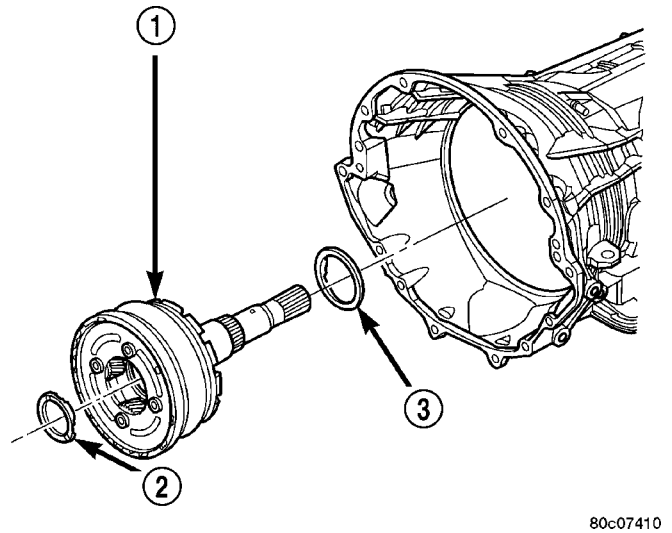

Fig. 43 Install Input/Reverse Planetary Assembly

1 - INPUT/REVERSE PLANETARY ASSEMBLY
2 - BEARING NUMBER 9
3 - BEARING NUMBER 12

(19) Install the number 12 thrust bearing (3) over the output shaft and against the rear planetary gear set. The flat side of the bearing goes toward the planetary gearset and the raised tabs on the inner race should face the rear of the transmission.

(20) Install the reverse/input planetary assembly (1) through the low/reverse clutch assembly. (Fig. 43)

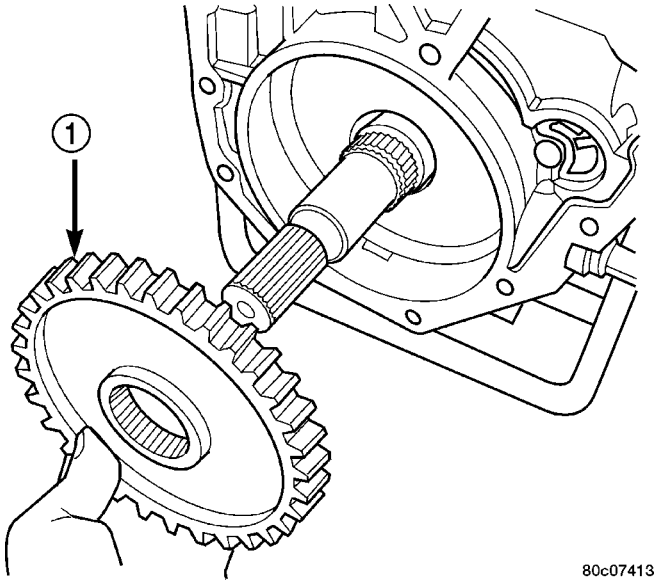

Fig. 44 Install Park Sprag Gear

1 - PARK SPRAG GEAR

(21) Install the park sprag gear (1) onto the output shaft. (Fig. 44)

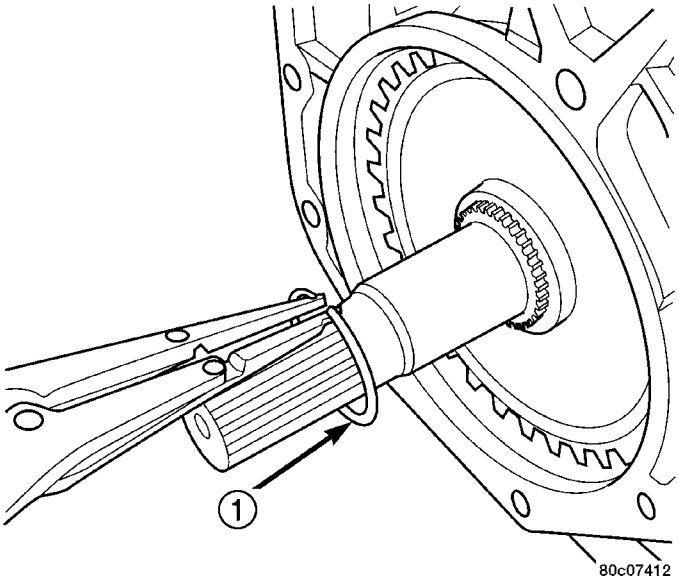

Fig. 45 Install Park Sprag Snap-Ring

1 - SNAP-RING

(22) Install the snap-ring (1) to hold the park sprag onto the output shaft. (Fig. 45)

AUTOMATIC TRANSMISSION - 545RFE (Continued)

(23) Install the 2C reaction plate (4) into the transmission case. (Fig. 46)

(24) Install the 2C clutch pack (2, 3, 4) into the transmission case. (Fig. 46)

(25) Install the number 8 thrust bearing (1) inside the reaction carrier with the outer race against the reaction planetary carrier (3).

(26) Install the reaction planetary gear set and the number 9 thrust bearing (2), with the inner race against the reaction planetary carrier (3), into the transmission case. (Fig. 47)

(27) Install the flat 2C clutch snap-ring into the transmission case. (Fig. 46)

(28) Install the reaction sun gear (4) into the reaction planetary gear set. **Make sure** the small shoulder is facing the front of the transmission. (Fig. 47)

(29) Install the number 7 thrust bearing (5) onto the reaction sun gear (4) with the inner race against the sun gear. (Fig. 47)

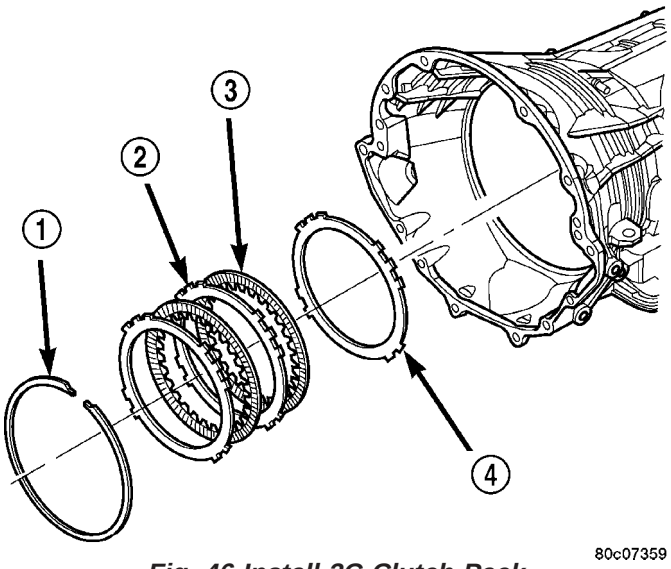

Fig. 46 Install 2C Clutch Pack

1 - SNAP-RING
2 - PLATE
3 - DISC
4 - REACTION PLATE

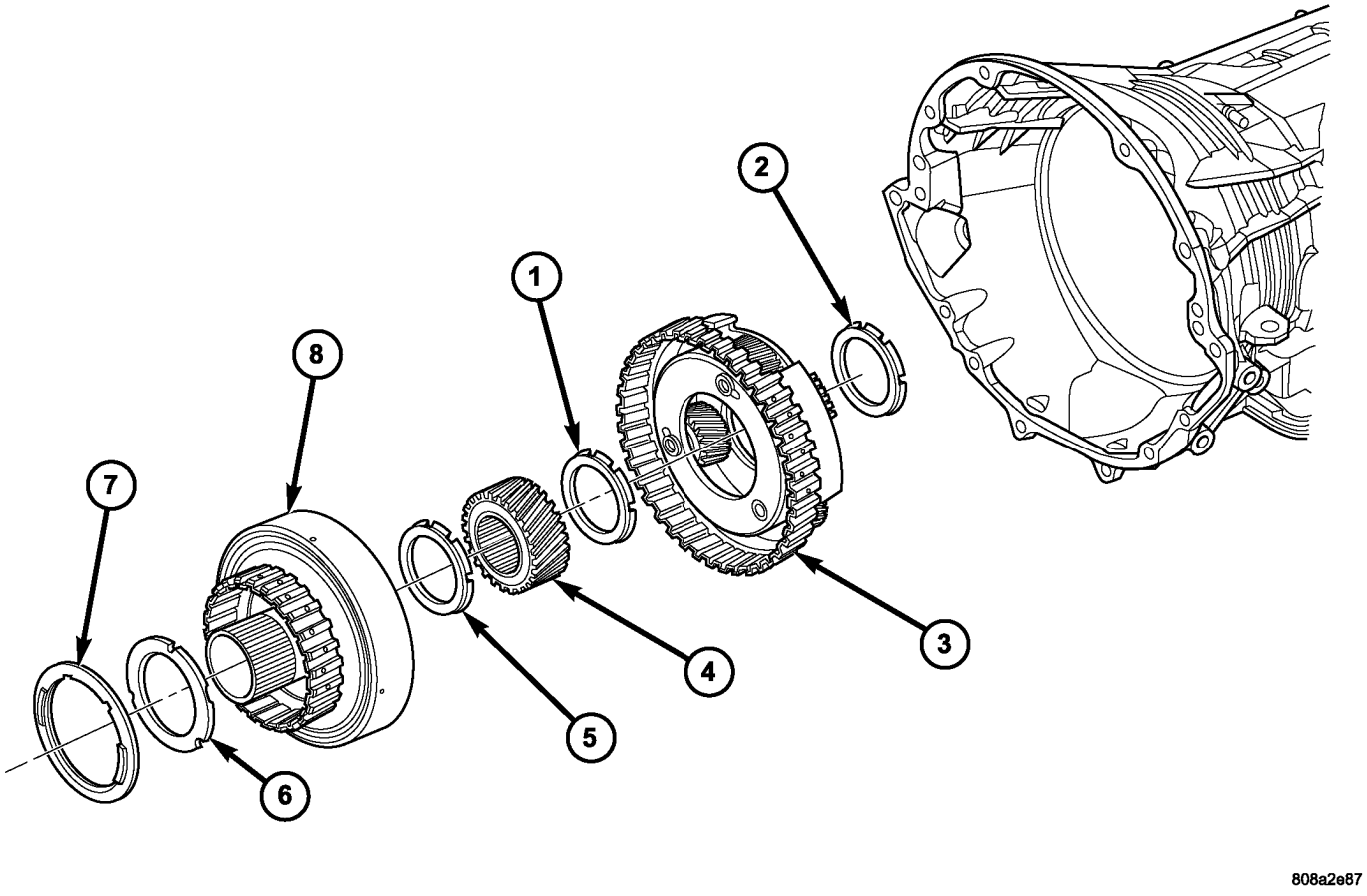

Fig. 47 Install Reaction Annulus and Carrier

1 - THRUST BEARING NUMBER 8
2 - THRUST BEARING NUMBER 9
3 - REACTION PLANETARY CARRIER
4 - REACTION SUN GEAR
5 - THRUST BEARING NUMBER 7
6 - THRUST PLATE (SELECT)
7 - THRUST BEARING NUMBER 6
8 - REACTION ANNULUS

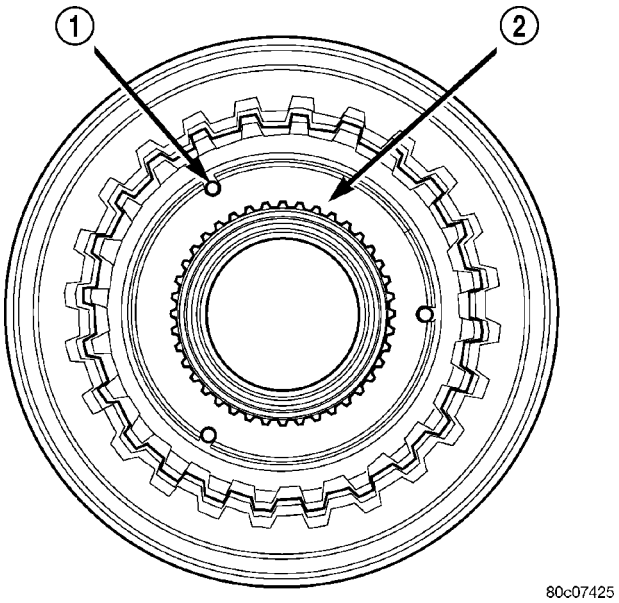

Fig. 48 Thrust Plate Alignment

1 - LOCATING LUG (3)
2 - THRUST PLATE

(30) Install the output shaft selective thrust plate (2) onto the reaction annulus with the oil grooves facing the annulus gear and the lugs (1) and notches aligned as shown. (Fig. 48)

(31) Install the number 6 thrust bearing (7) against the output shaft selective thrust plate (6) with the flat side against the thrust plate (Fig. 47) and the raised tabs on the inner race facing the front of the transmission.

(32) Install the reaction annulus (8) into the reaction planetary gear set. (Fig. 47)

(33) Install the 4C retainer/bulkhead (2) into the transmission case. Make sure that the oil feed holes are pointing toward the valve body area. Rotate the reaction annulus during the installation of the 4C retainer/bulkhead to ease installation.

(34) Install the 4C retainer/bulkhead tapered snap-ring (1) into the transmission case (Fig. 49) with the taper toward the front of the case. Make sure that the open ends of the snap-ring are located in the case opening toward the valve body area.

(35) Air check the 2C and 4C clutch operation.

(36) Using Alignment Plate 8261 (1), Adapter 8266-17 from End-Play Tool Set 8266 (2) and Dial Indicator C-3339 (3), measure (Fig. 50) and record the output shaft end-play. The correct output shaft end-play is 0.22-0.55 mm (0.009-0.021 in.). Adjust as necessary. Install the chosen output shaft selective thrust plate and re-measure end-play to verify selection.

(37) Apply a bead of RTV silicone and install the extension/adapter housing onto the transmission case.

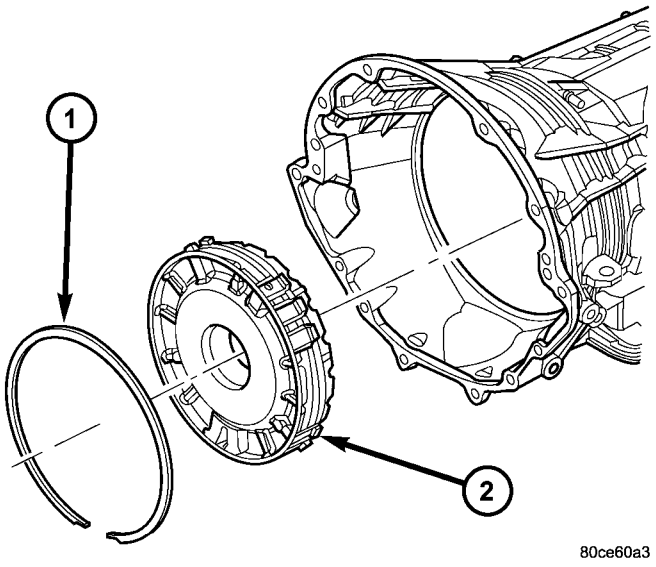

Fig. 49 Install 4C Clutch Retainer/Bulkhead

1 - SNAP-RING
2 - 4C CLUTCH RETAINER/BULKHEAD

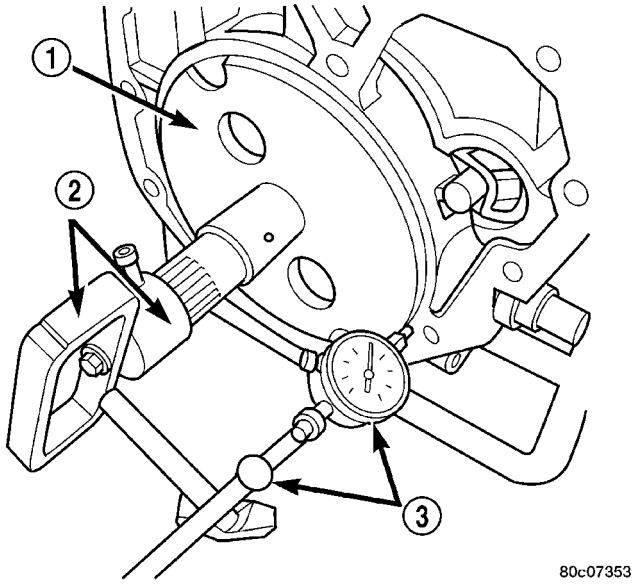

Fig. 50 Measure Output Shaft End Play

1 - TOOL 8261
2 - TOOL 8266
3 - TOOL C-3339

(38) Install and torque the bolts to hold the extension/adapter housing onto the transmission case. The correct torque is 54 N·m (40 ft.lbs.).

(39) Install the number 5 thrust bearing (1) (Fig. 51) and selective thrust plate (2) onto the 4C retainer/bulkhead. Be sure that the outer race of the bearing is against the thrust plate.

AUTOMATIC TRANSMISSION - 545RFE (Continued)

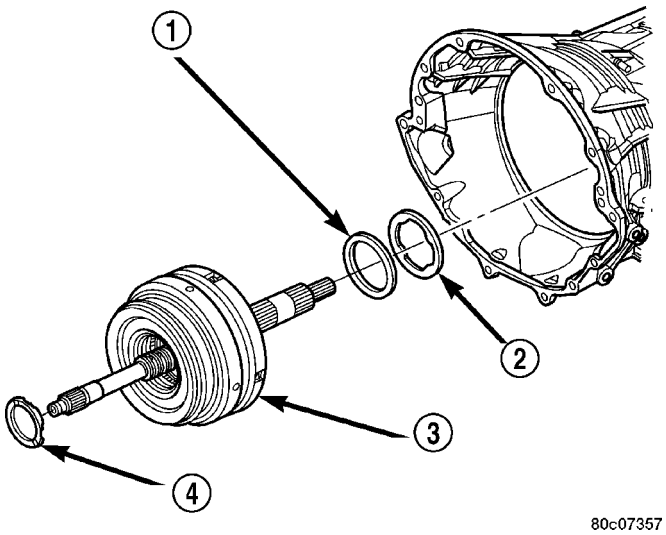

Fig. 51 Install Input Clutch Assembly

1 - THRUST BEARING NUMBER 5
2 - THRUST PLATE (SELECT)
3 - INPUT CLUTCH ASSEMBLY
4 - THRUST BEARING NUMBER 1

(40) Install the input clutch assembly (3) (Fig. 51) into the transmission case. Make sure that the input clutch assembly is fully installed by performing a visual inspection through the input speed sensor hole. If the tone wheel teeth on the input clutch assembly are centered in the hole, the assembly is fully installed.

(41) Install the number 1 thrust bearing (4) with the outer race up in the pocket of the input clutch assembly. (Fig. 51)

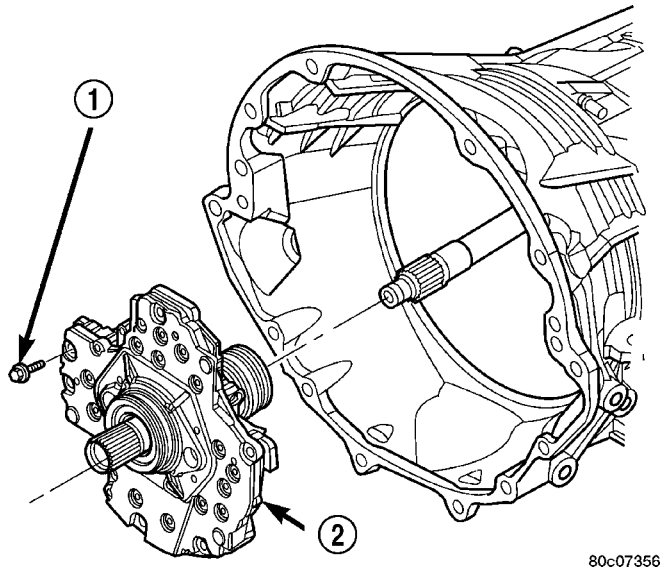

Fig. 52 Install Oil Pump

1 - OIL PUMP TO CASE BOLT (6)
2 - OIL PUMP

(42) Install the oil pump (2) into the transmission case. (Fig. 52)

(43) Install the bolts (1) to hold the oil pump into the transmission case. Tighten the oil pump bolts to 28 N·m (250 in.lbs.).

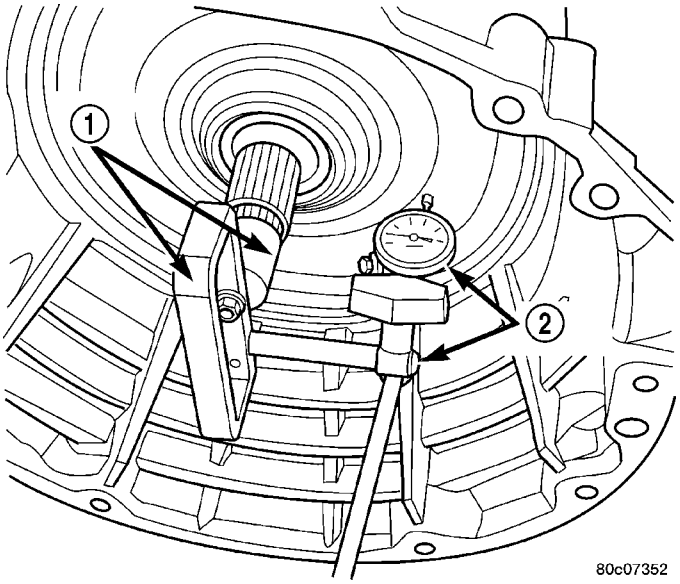

Fig. 53 Measure Input Shaft End Play

1 - TOOL 8266
2 - TOOL C-3339

(44) Using Adapter 8266-1 from End-Play Tool Set 8266 (1) and Dial Indicator C-3339 (2), measure (Fig. 53) and record the input shaft end-play. The correct end-play is 0.46-0.89 mm (0.018-0.035 in.). Adjust as necessary. Install the chosen thrust plate on the number 5 thrust bearing and re-measure end-play to verify selection.

NOTE: When measuring the input shaft end-play, two ″stops″ will be felt. When the input shaft is pushed inward and the dial indicator zeroed, the first ″stop″ felt when the input shaft is pulled outward is the movement of the input shaft in the input clutch housing hub. This value should not be included in the end-play measured value and therefore must be recorded and subtracted from the dial indicator reading.

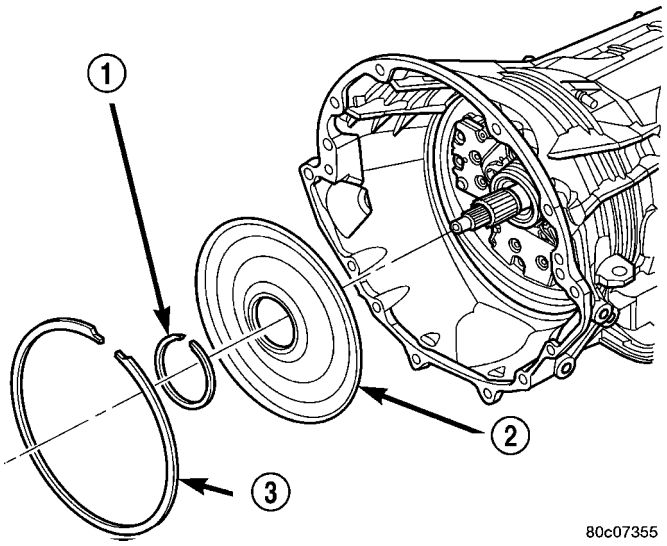

Fig. 54 Install the Transmission Front Cover

1 - INNER SNAP-RING
2 - TRANSMISSION FRONT COVER
3 - OUTER SNAP-RING

(45) Install the transmission front cover (2) into the transmission case. (Fig. 54)

(46) Install the outer snap-ring (3) to hold the transmission front cover (2) into the transmission case. (Fig. 54)

(47) Partially install the inner transmission front cover snap-ring (1) onto the oil pump. (Fig. 54)

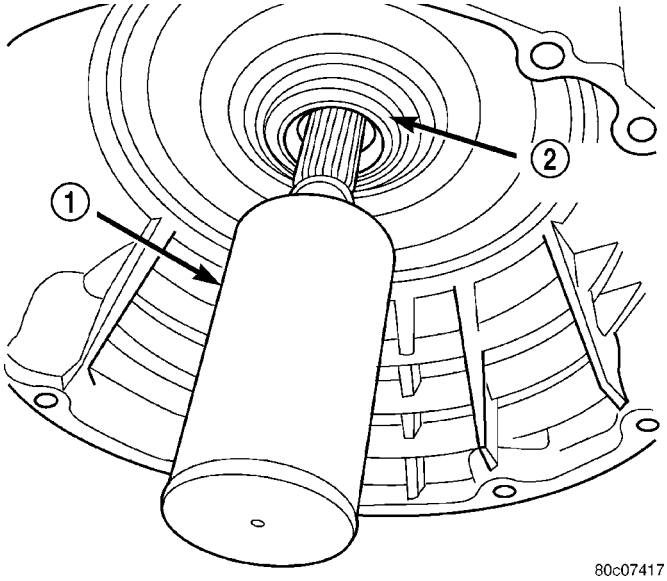

Fig. 55 Seat Snap-Ring Using Tool 8255

1 - TOOL 8255
2 - SNAP-RING

(48) Using Installer 8255 (1), install the inner transmission front cover snap-ring (2) the remainder of the way onto the oil pump. (Fig. 55)

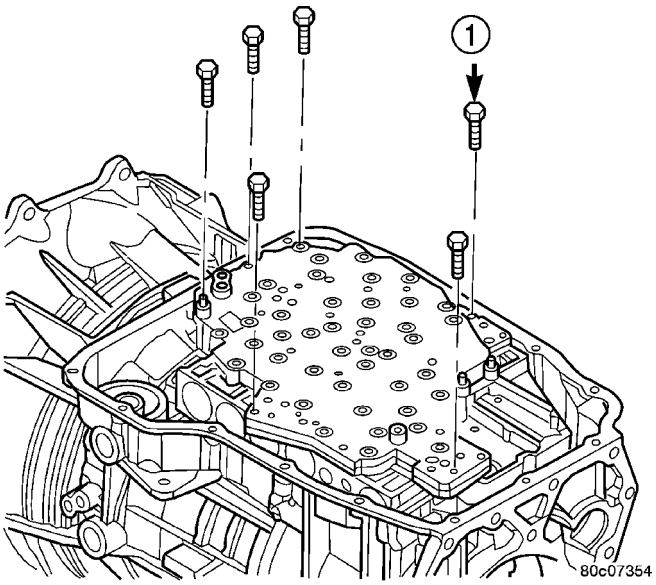

Fig. 56 Install Valve Body Assembly

1 - VALVE BODY TO CASE BOLT (6)

(49) Install the valve body. Verify that the pin on the manual lever has properly engaged the TRS selector plate. Tighten the valve body to transmission case bolts (1) (Fig. 56) to 12 N·m (105 in.lbs.).

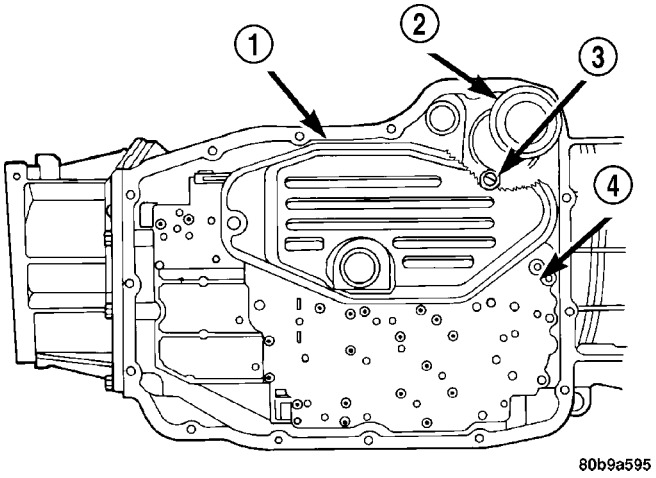

Fig. 57 Install Primary Oil and Cooler Filters

1 - PRIMARY OIL FILTER
2 - COOLER RETURN FILTER
3 - COOLER RETURN FILTER BYPASS VALVE
4 - VALVE BODY

CAUTION: The primary oil filter seal MUST be fully installed flush against the oil pump body. DO NOT install the seal onto the filter neck and attempt to install the filter and seal as an assembly. Damage to the transmission will result.

(50) Install a new primary oil filter seal in the oil pump inlet bore. Seat the seal in the bore with the butt end of a hammer, or other suitable tool.

AUTOMATIC TRANSMISSION - 545RFE (Continued)

(51) Install the primary oil filter (1) (Fig. 57) and the oil cooler return filter (2). Tighten the screw to hold the primary oil filter to the valve body to 4.5 N·m (40 in.lbs.). Using Oil Filter Wrench 8321, tighten the cooler return oil filter to the transmission case to 14 N·m (125 in.lbs.).

(52) Apply RTV silicone to the oil pan and install the transmission oil pan. Tighten the bolts to 12 N·m (105 in.lbs.).

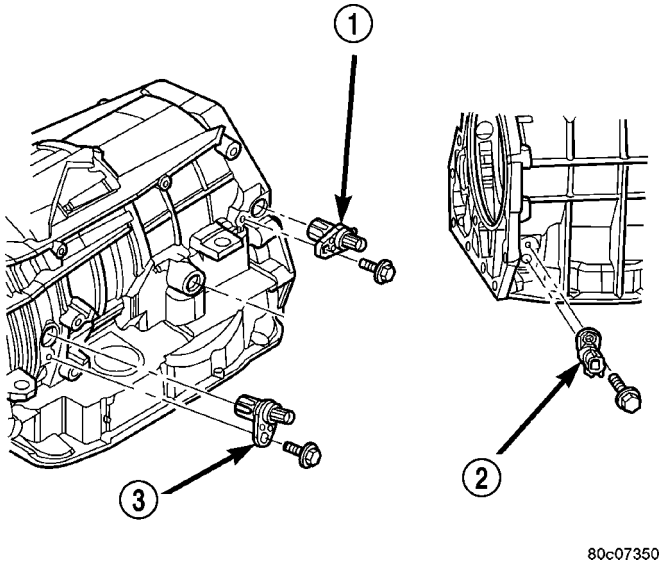

Fig. 58 Install Input, Output, and Line Pressure Sensors

1 - OUTPUT SPEED SENSOR
2 - LINE PRESSURE SENSOR
3 - INPUT SPEED SENSOR

(53) Install the input (3), output (1), and line pressure sensors (2) (Fig. 58). Tighten the bolts to 12 N·m (105 in.lbs.).

INSTALLATION

(1) Check torque converter hub and hub drive flats for sharp edges burrs, scratches, or nicks. Polish the hub and flats with 320/400 grit paper and crocus cloth if necessary. Verify that the converter hub o-ring is properly installed and is free of any debris. The hub must be smooth to avoid damaging pump seal at installation.

(2) If a replacement transmission is being installed, transfer any components necessary, such as the manual shift lever and shift cable bracket, from the original transmission onto the replacement transmission.

(3) Lubricate oil pump seal lip with transmission fluid.

(4) Align converter and oil pump.

(5) Carefully insert converter in oil pump. Then rotate converter back and forth until fully seated in pump gears.

(6) Check converter seating with steel scale and straightedge (Fig. 59). Surface of converter lugs should be at least 13mm (1/2 in.) to rear of straightedge when converter is fully seated.

(7) Temporarily secure converter with C-clamp.

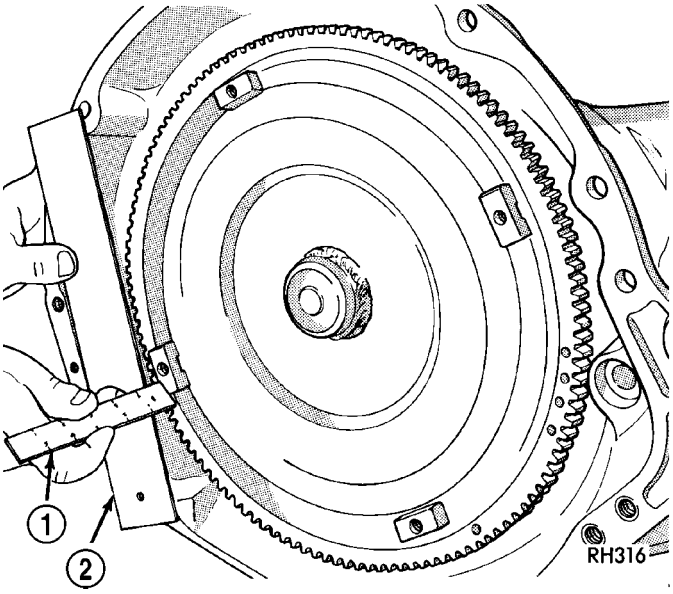

Fig. 59 Checking Torque Converter Seating - Typical

1 - SCALE
2 - STRAIGHTEDGE

(8) Position transmission on jack and secure it with chains.

(9) Check condition of converter driveplate. Replace the plate if cracked, distorted or damaged. **Also be sure transmission dowel pins are seated in engine block and protrude far enough to hold transmission in alignment.**

(10) Apply a light coating of Mopar® High Temp Grease to the torque converter hub pocket in the rear pocket of the engine's crankshaft.

(11) Raise transmission (Fig. 60) and align the torque converter with the drive plate and transmission converter housing with the engine block.

(12) Move transmission forward. Then raise, lower or tilt transmission to align the converter housing with engine block dowels.

(13) Carefully work transmission forward and over engine block dowels until converter hub is seated in crankshaft. Verify that no wires, or the transmission vent hose, have become trapped between the engine block and the transmission.

(14) Install two bolts to attach the transmission to the engine.

(15) Install remaining torque converter housing to engine bolts. Tighten to 68 N·m (50 ft.lbs.).

(16) Install transfer case, if equipped. Tighten transfer case nuts to 35 N·m (26 ft.lbs.).

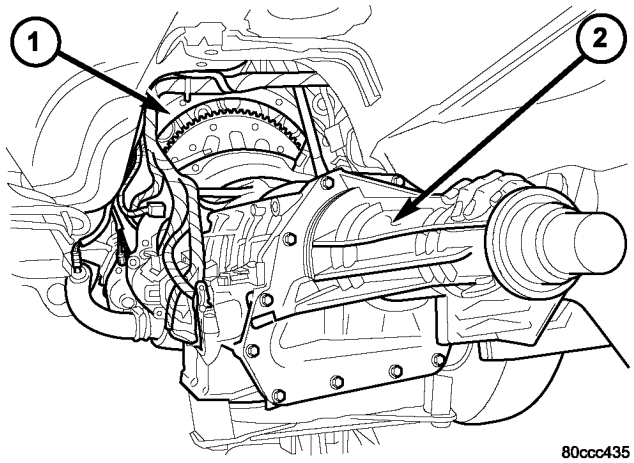

Fig. 60 Install Transmission

1 - ENGINE
2 - TRANSMISSION

(17) Install rear transmission crossmember. Tighten crossmember to frame bolts to 68 N·m (50 ft.lbs.).

(18) Install rear support to transmission. Tighten bolts to 47 N·m (35 ft.lbs.).

(19) Lower transmission onto crossmember and install bolts attaching transmission mount to crossmember. Tighten clevis bracket to crossmember bolts to 47 N·m (35 ft.lbs.). Tighten the clevis bracket to rear support bolt to 68 N·m (50 ft.lbs.).

(20) Remove engine support fixture.

(21) Connect gearshift cable to support bracket and transmission manual lever (Fig. 61).

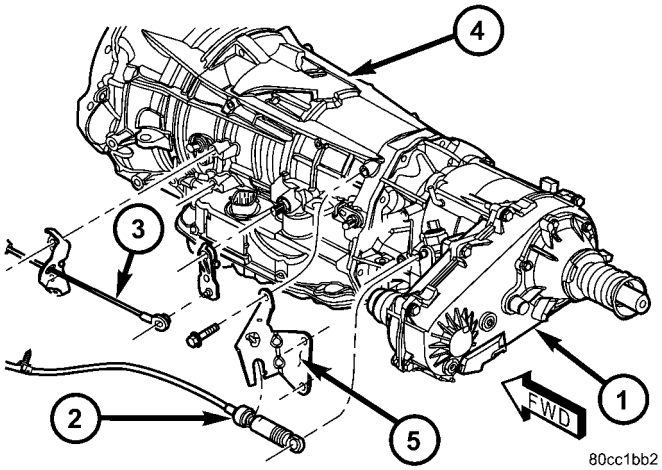

Fig. 61 Install Shift Cables

1 - TRANSFER CASE
2 - TRANSFER CASE SHIFT CABLE
3 - TRANSMISSION SHIFT CABLE
4 - AUTOMATIC TRANSMISSION
5 - TRANSFER CASE SHIFT CABLE BRACKET

(22) Connect wires to solenoid and pressure switch assembly (Fig. 62) connector, input (Fig. 63) and output (Fig. 64) speed sensors, and line pressure sensor (Fig. 65). Be sure transmission harnesses are properly routed.

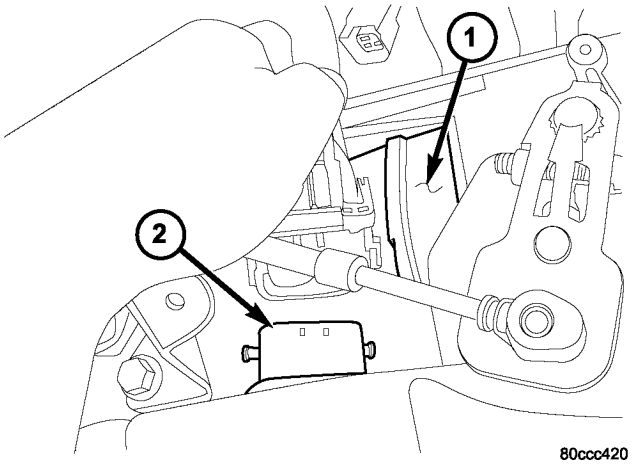

Fig. 62 Connect Transmission Solenoid

1 - TRANSMISSION
2 - TRANSMISSION SOLENOID/TRS ASSEMBLY

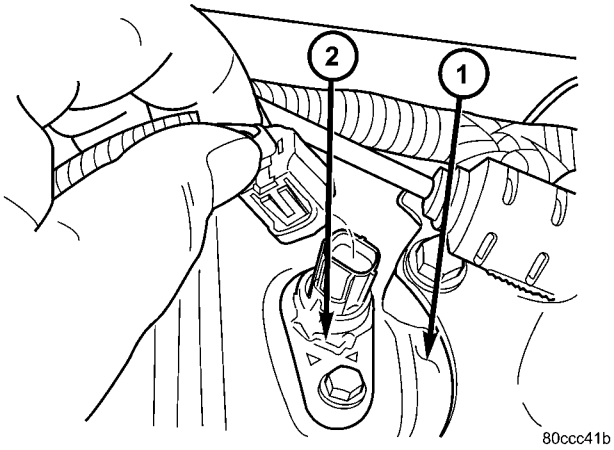

Fig. 63 Connect Input Speed Sensor

1 - TRANSMISSION
2 - INPUT SPEED SENSOR

CAUTION: It is essential that correct length bolts be used to attach the converter to the driveplate. Bolts that are too long will damage the clutch surface inside the converter.

(23) Install torque converter-to-driveplate bolts. Tighten bolts to 31 N·m (270 in. lbs.).

(24) Install starter motor and cooler line bracket.

(25) Connect cooler lines to transmission.

(26) Install transmission fill tube.

(27) Install exhaust components (Fig. 66).

(28) Install the structural dust cover (Fig. 67) (Refer to 9 - ENGINE/ENGINE BLOCK/STRUCTURAL COVER - INSTALLATION) onto the transmission and the engine.

(29) Align and connect propeller shaft(s).

(30) Adjust gearshift cable if necessary.

AUTOMATIC TRANSMISSION - 545RFE (Continued)

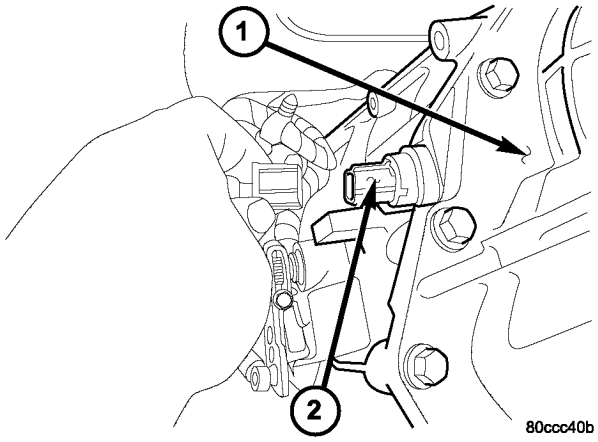

Fig. 64 Connect Output Speed Sensor

1 - TRANSMISSION
2 - OUTPUT SPEED SENSOR

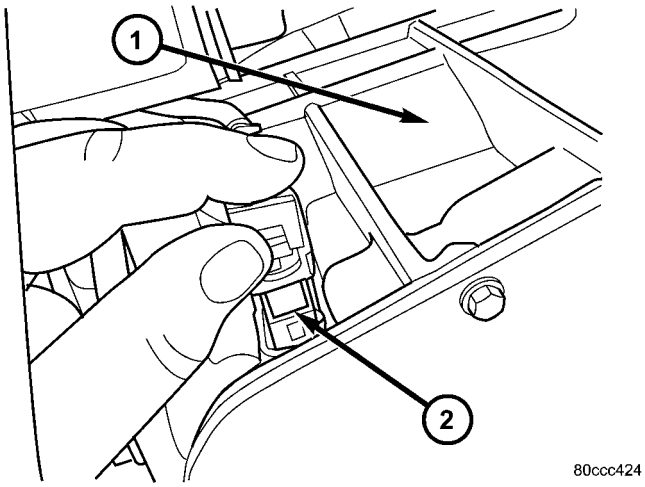

Fig. 65 Connect Line Pressure Sensor

1 - TRANSMISSION
2 - LINE PRESSURE SENSOR

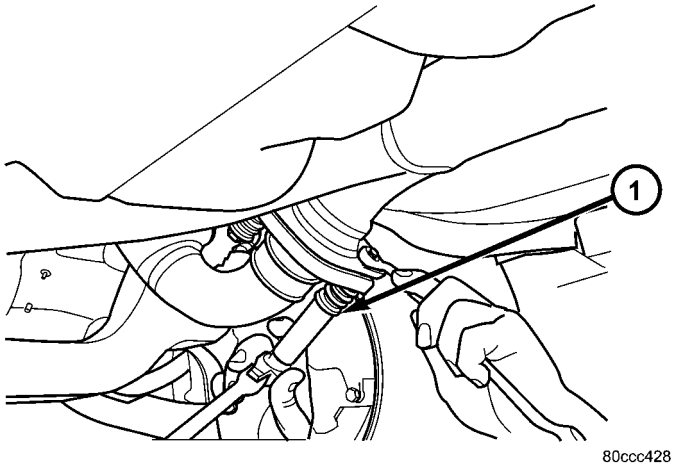

Fig. 66 Install Exhaust Flange Bolts

1 - EXHAUST FLANGE BOLTS

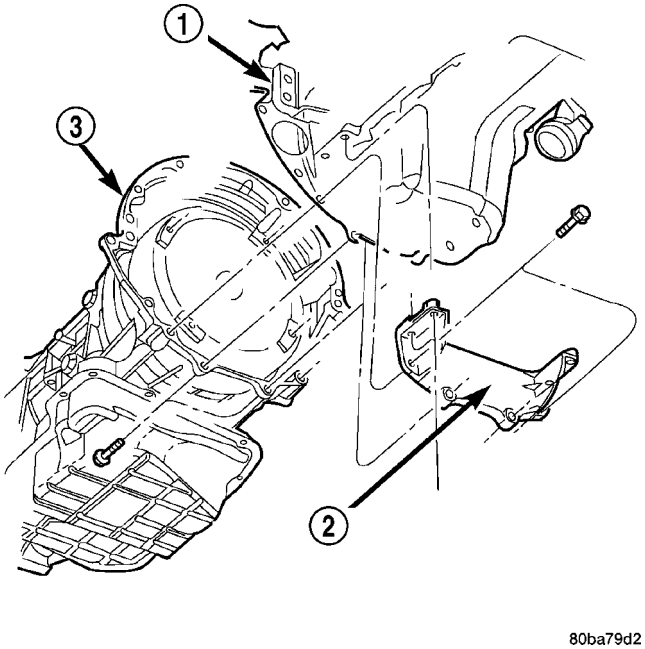

Fig. 67 Transmission Collar

1 - ENGINE
2 - ENGINE TO TRANSMISSION COLLAR
3 - TRANSMISSION

(31) Install any skid plates removed previously (Fig. 68). (Refer to 13 - FRAMES & BUMPERS/ FRAME/TRANSFER CASE SKID PLATE - INSTALLATION)

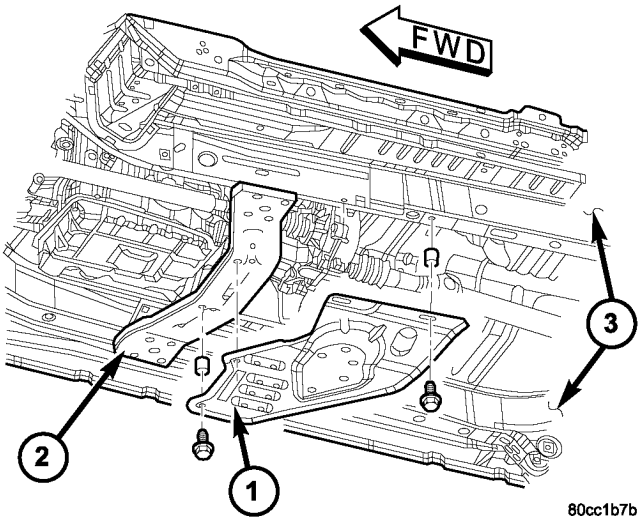

Fig. 68 Install Skid Plate

1 - SKID PLATE
2 - TRANSMISSION CROSSMEMBER
3 - FRAME RAILS

(32) Lower vehicle.

(33) Fill transmission with Mopar® ATF +4, type 9602, Automatic Transmission Fluid.

AUTOMATIC TRANSMISSION - 545RFE (Continued)

SCHEMATICS AND DIAGRAMS

HYDRAULIC SCHEMATICS

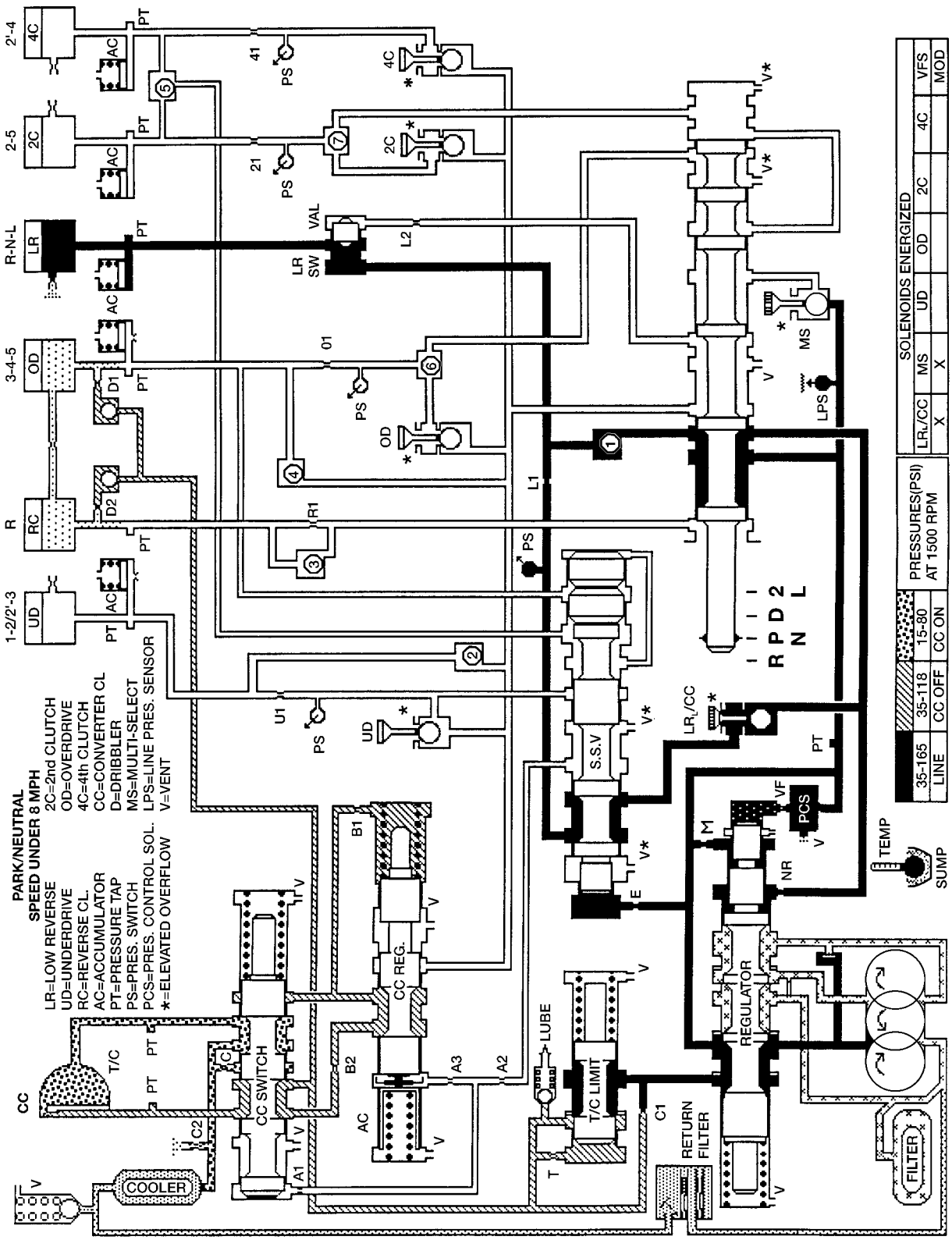

HYDRAULIC FLOW IN PARK/NEUTRAL

AUTOMATIC TRANSMISSION - 545RFE (Continued)

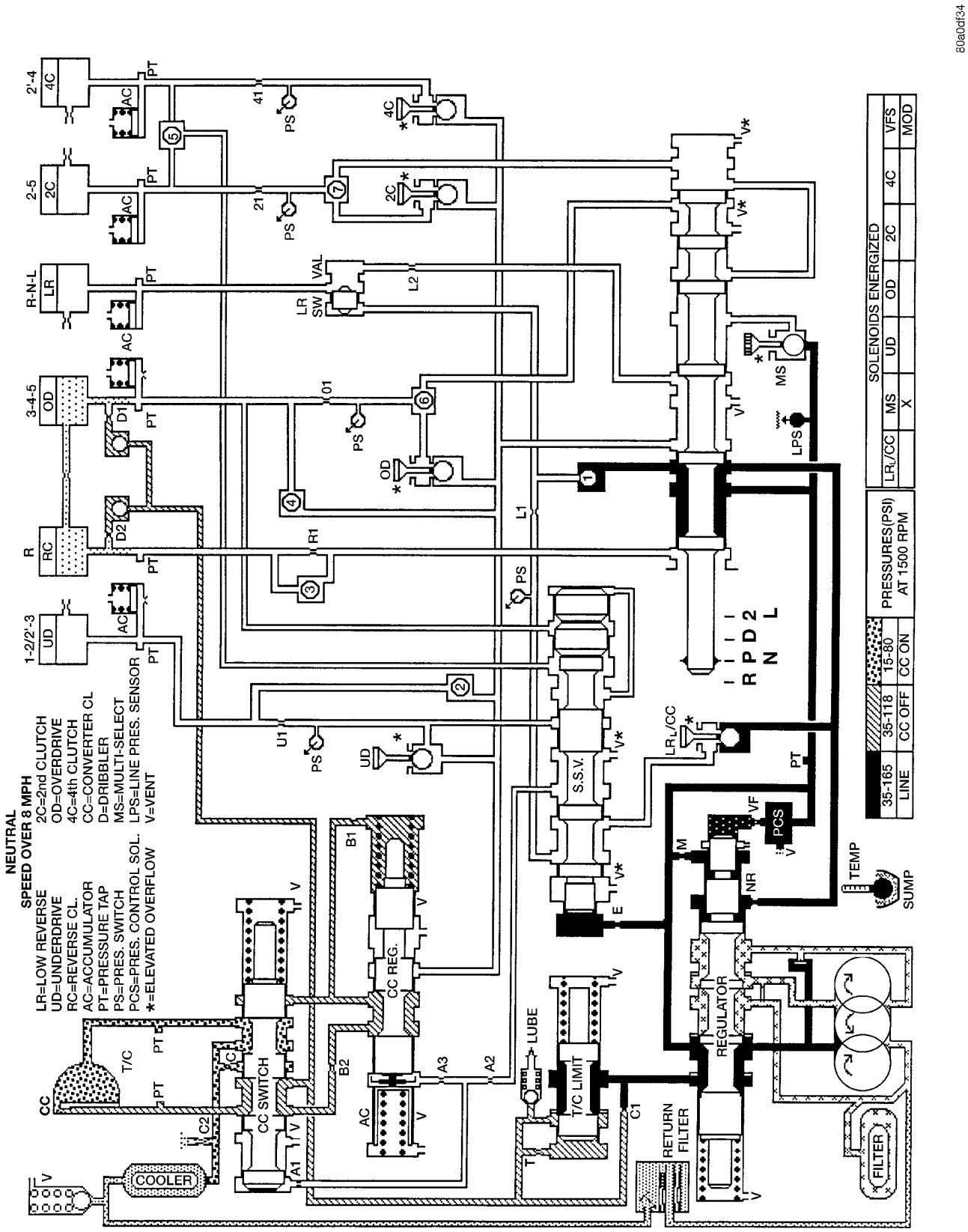

HYDRAULIC FLOW IN NEUTRAL OVER 8MPH

AUTOMATIC TRANSMISSION - 545RFE (Continued)

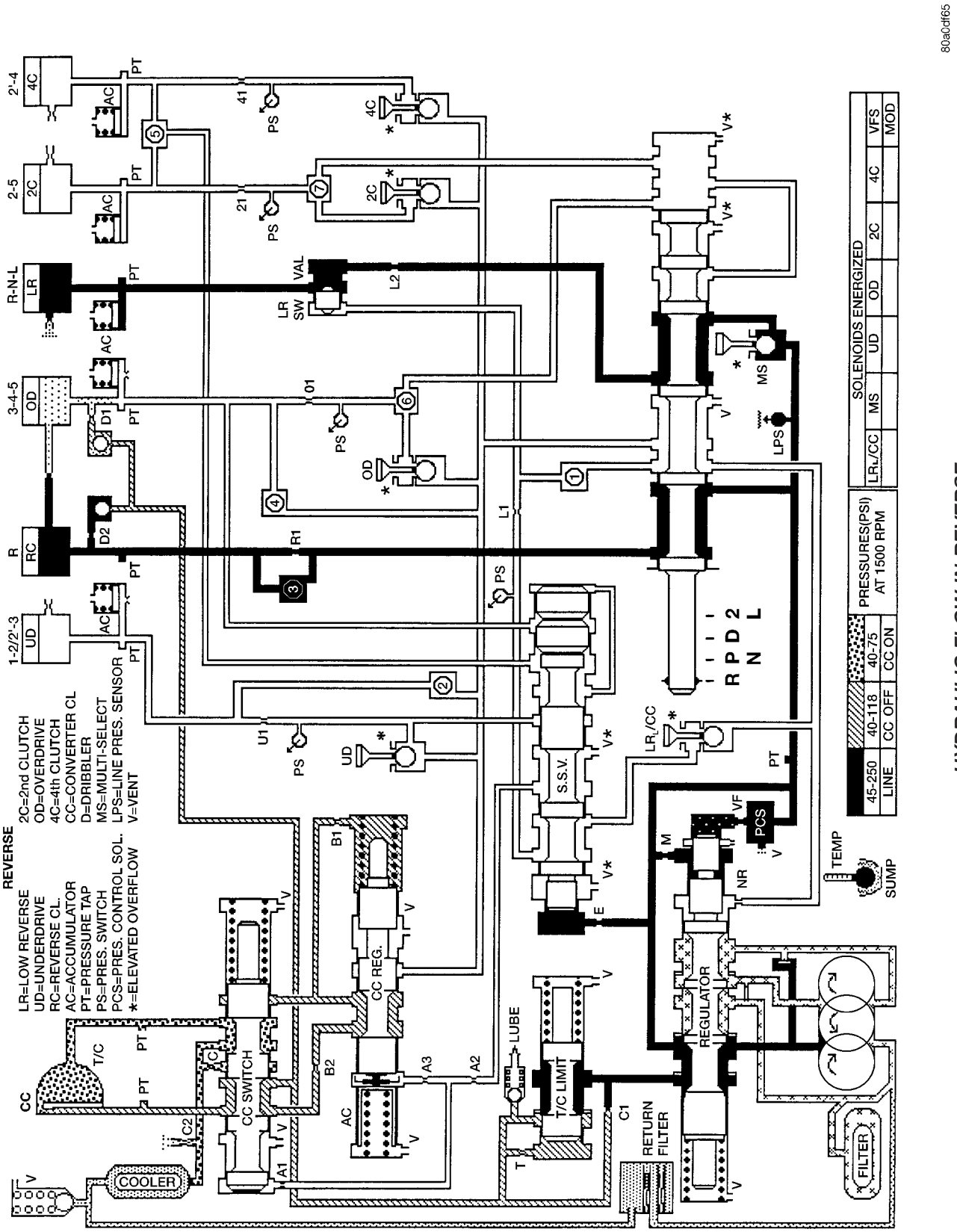

HYDRAULIC FLOW IN REVERSE

AUTOMATIC TRANSMISSION - 545RFE (Continued)

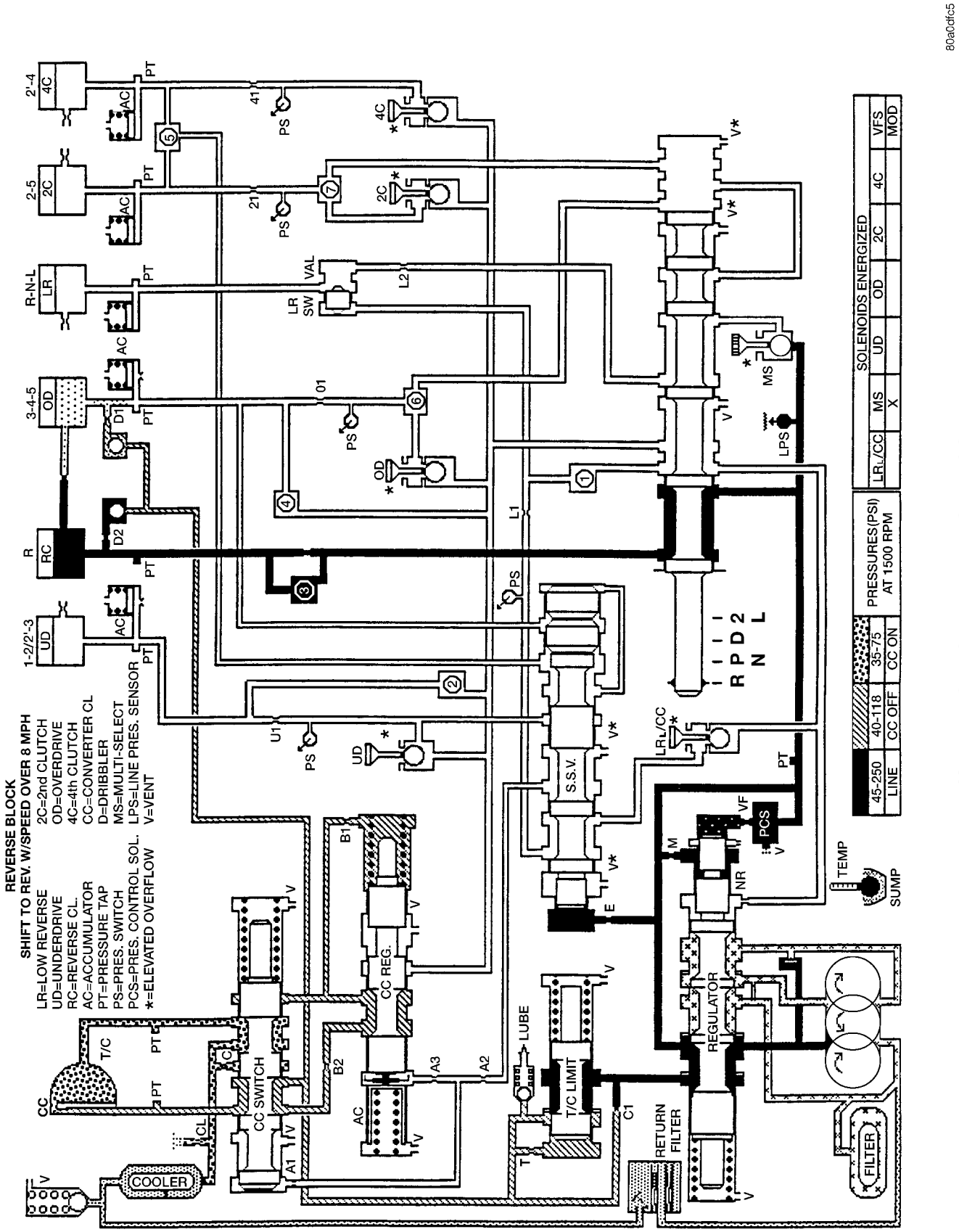

AUTOMATIC TRANSMISSION - 545RFE (Continued)

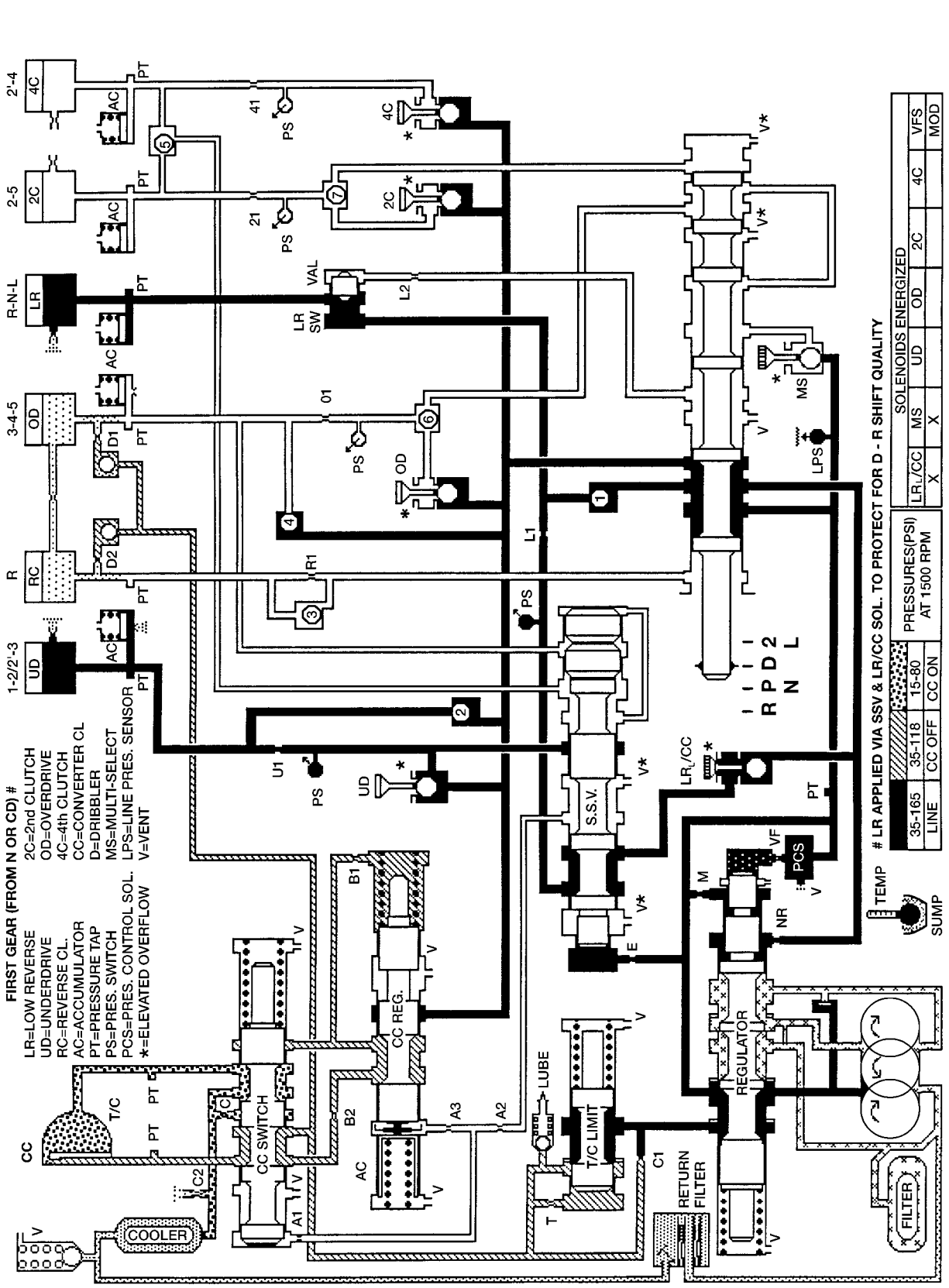

HYDRAULIC FLOW IN FIRST GEAR (FROM N OR OD)

AUTOMATIC TRANSMISSION - 545RFE (Continued)

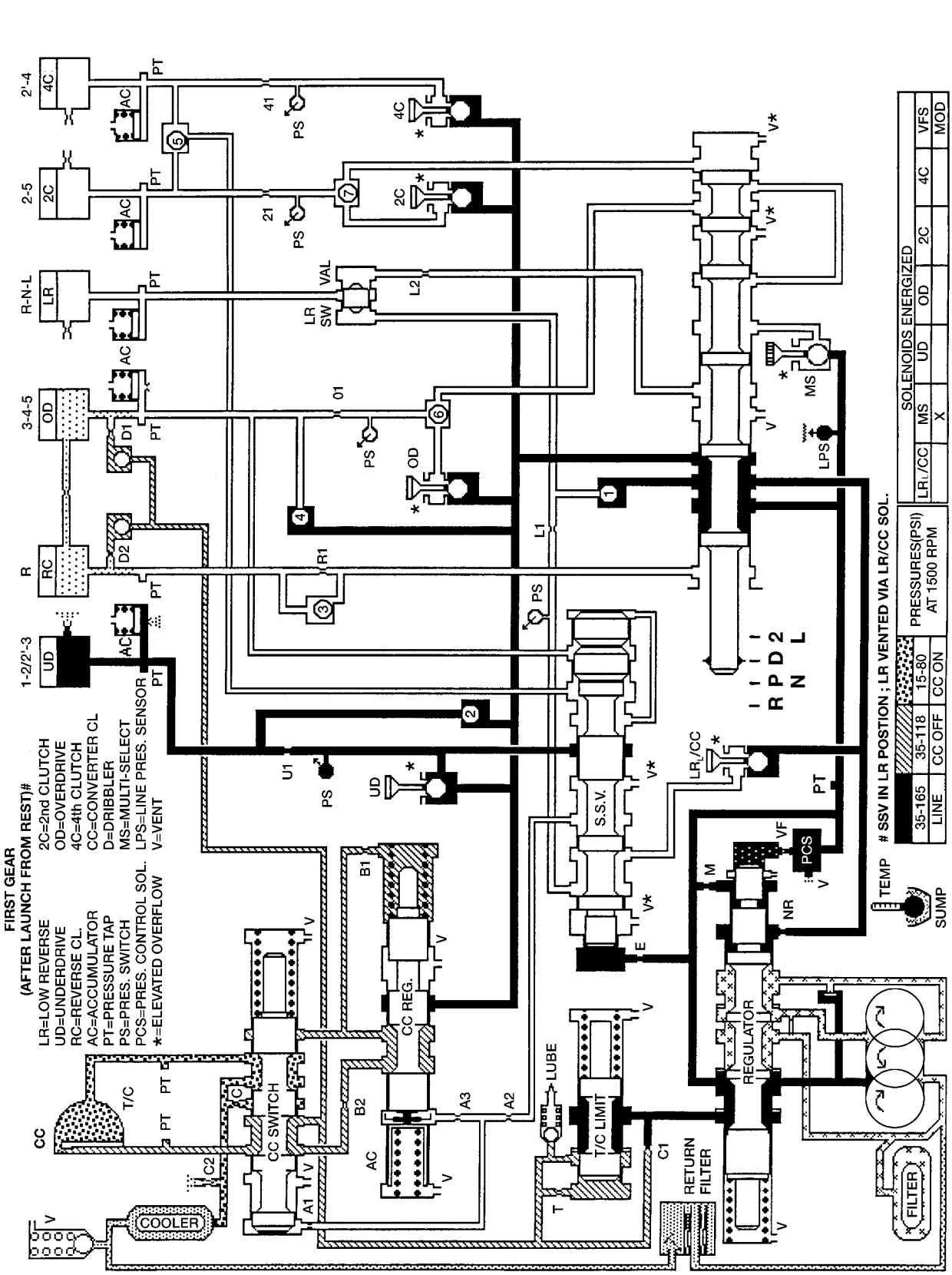

HYDRAULIC FLOW IN FIRST GEAR (AFTER LAUNCH FROM REST)

AUTOMATIC TRANSMISSION - 545RFE (Continued)

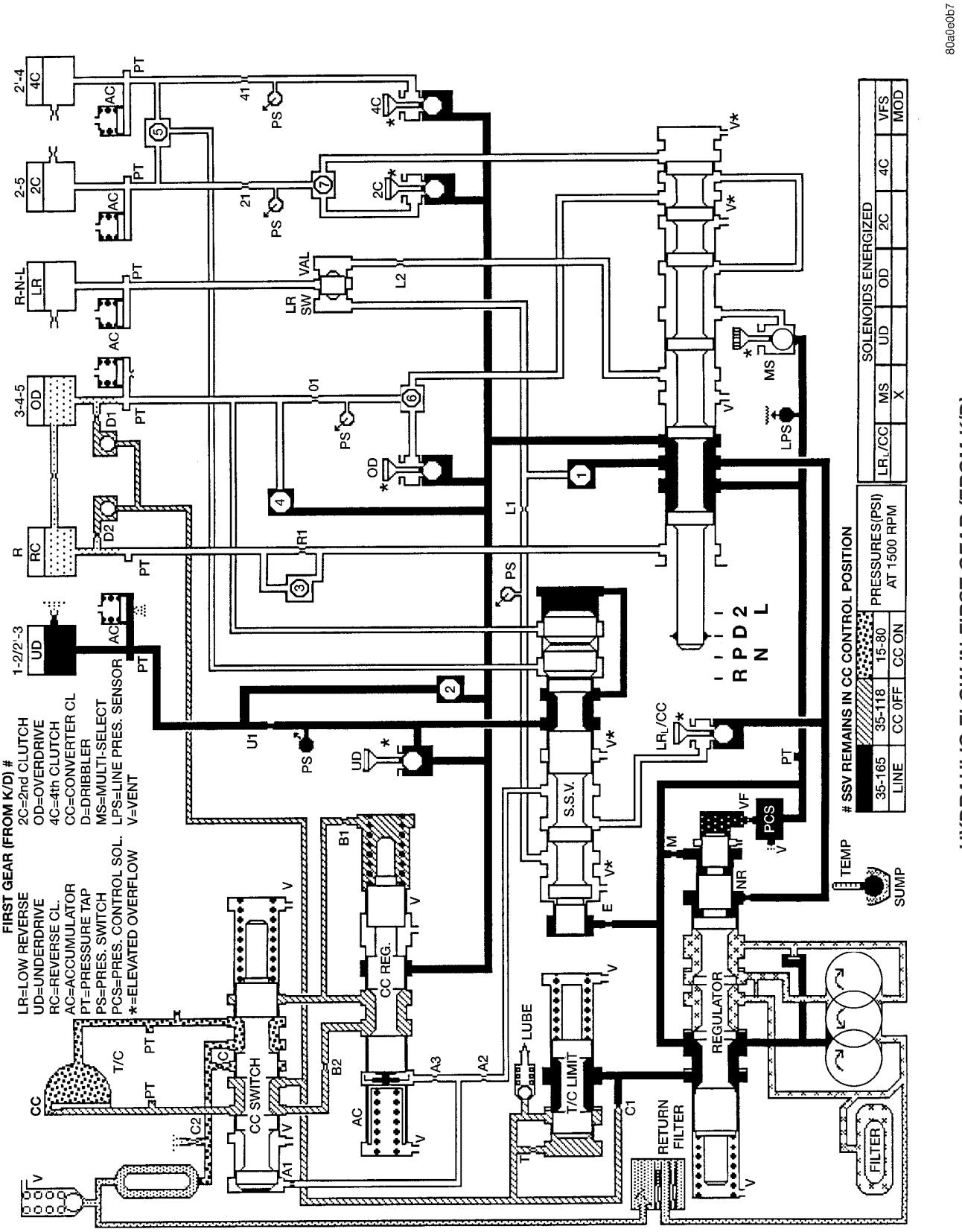

HYDRAULIC FLOW IN FIRST GEAR (FROM K/D)

AUTOMATIC TRANSMISSION - 545RFE (Continued)

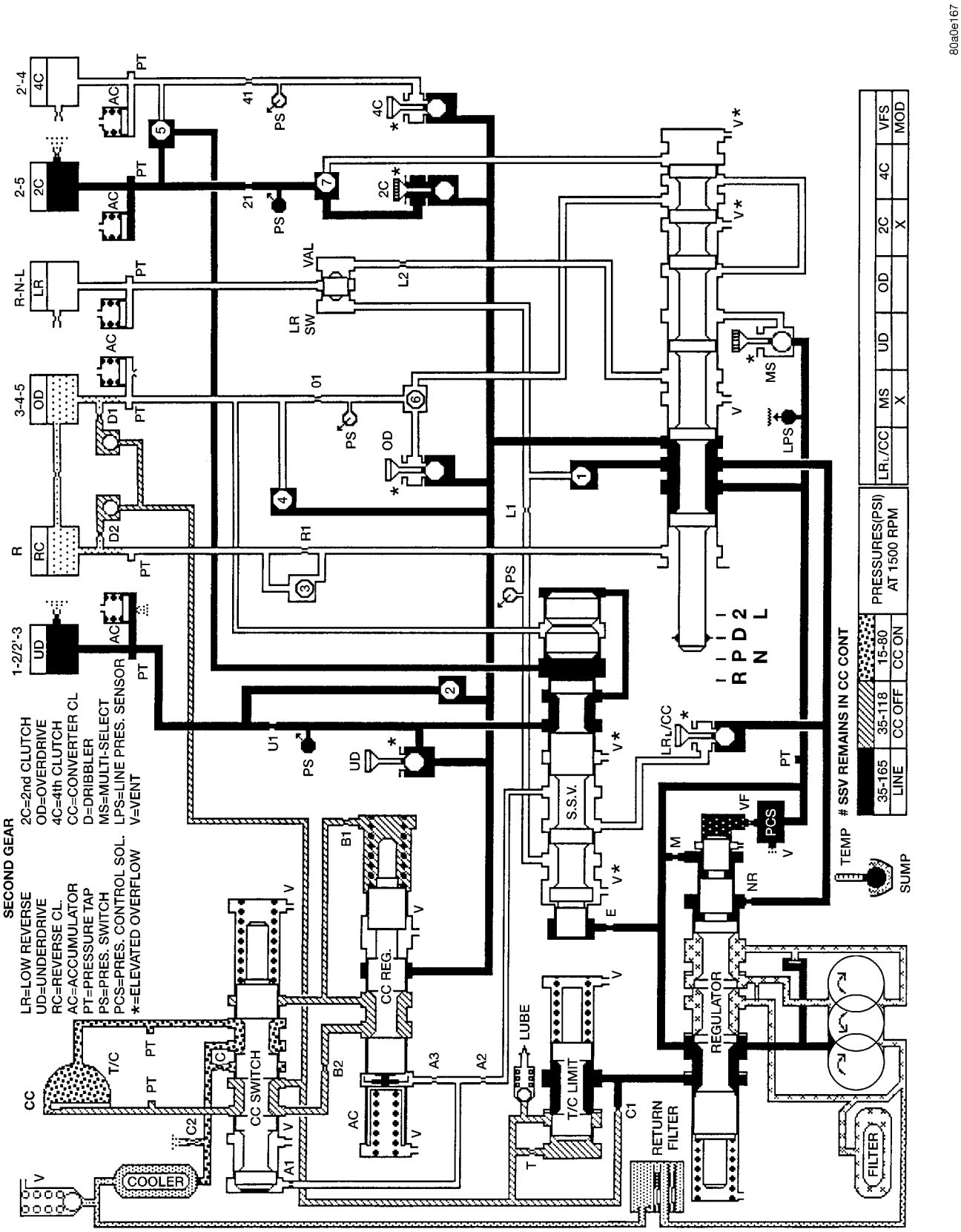

HYDRAULIC FLOW IN SECOND GEAR

AUTOMATIC TRANSMISSION - 545RFE (Continued)

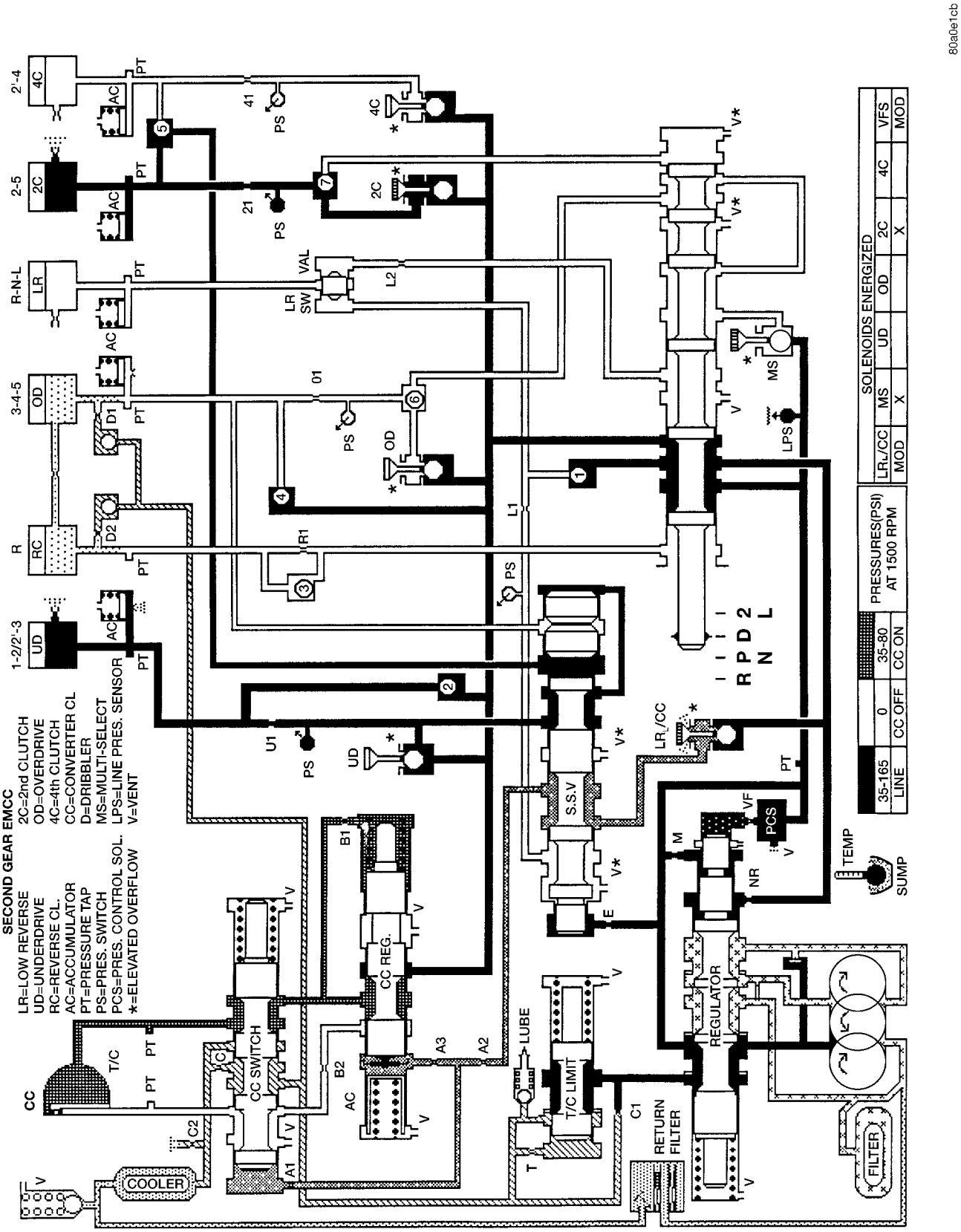

HYDRAULIC FLOW IN SECOND GEAR EMCC

AUTOMATIC TRANSMISSION - 545RFE (Continued)

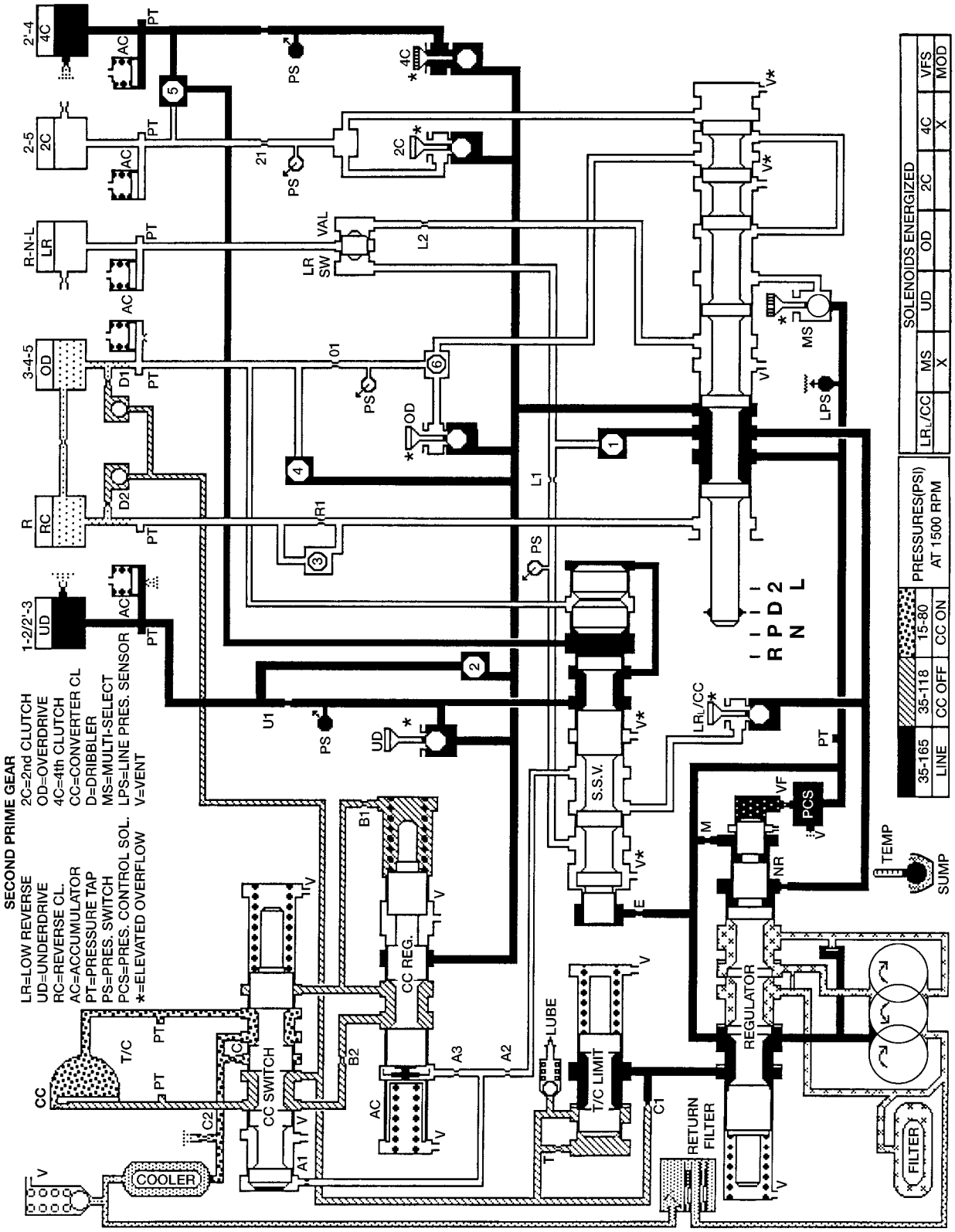

HYDRAULIC FLOW IN SECOND PRIME GEAR

AUTOMATIC TRANSMISSION - 545RFE (Continued)

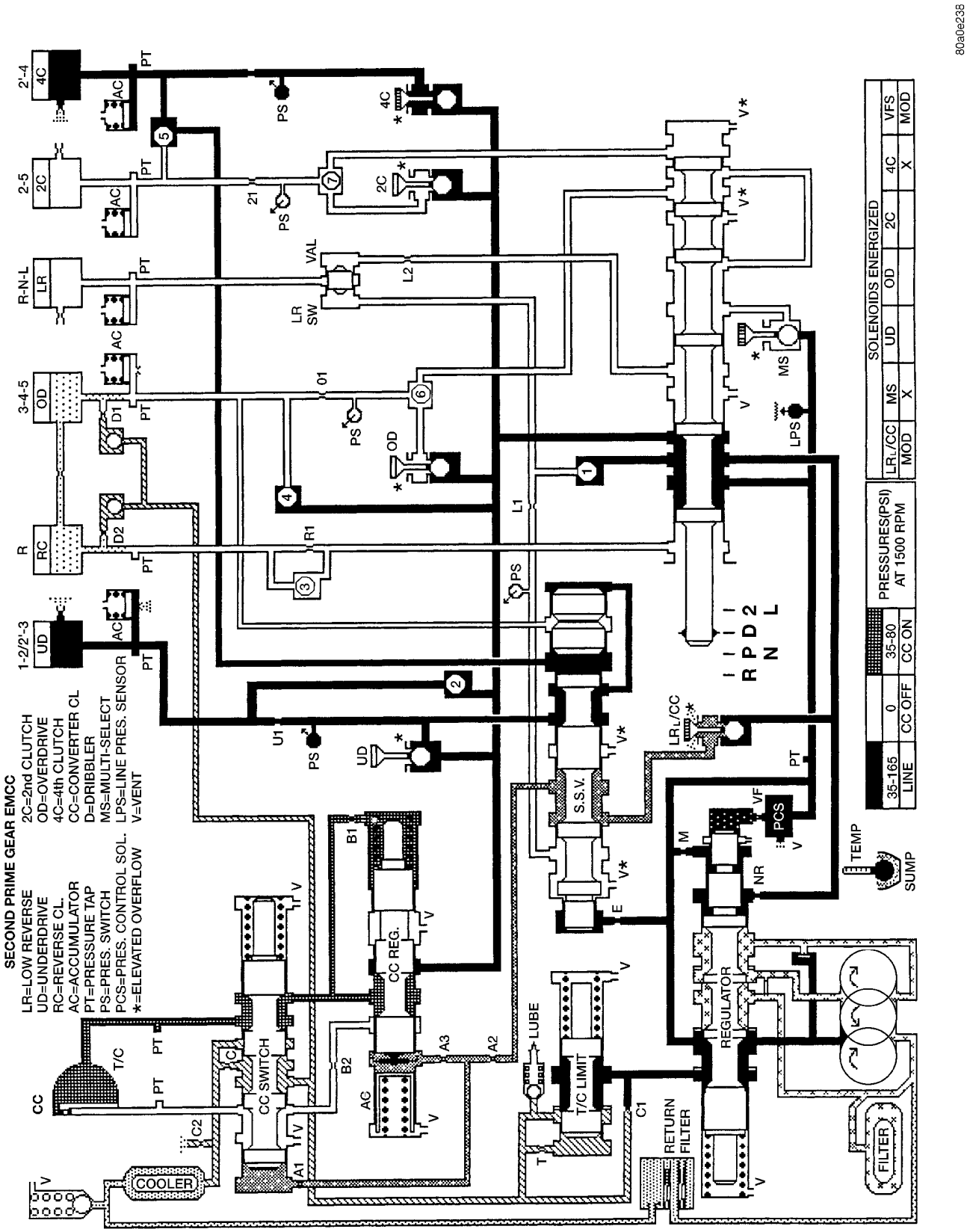

HYDRAULIC FLOW IN SECOND PRIME GEAR EMCC

AUTOMATIC TRANSMISSION - 545RFE (Continued)

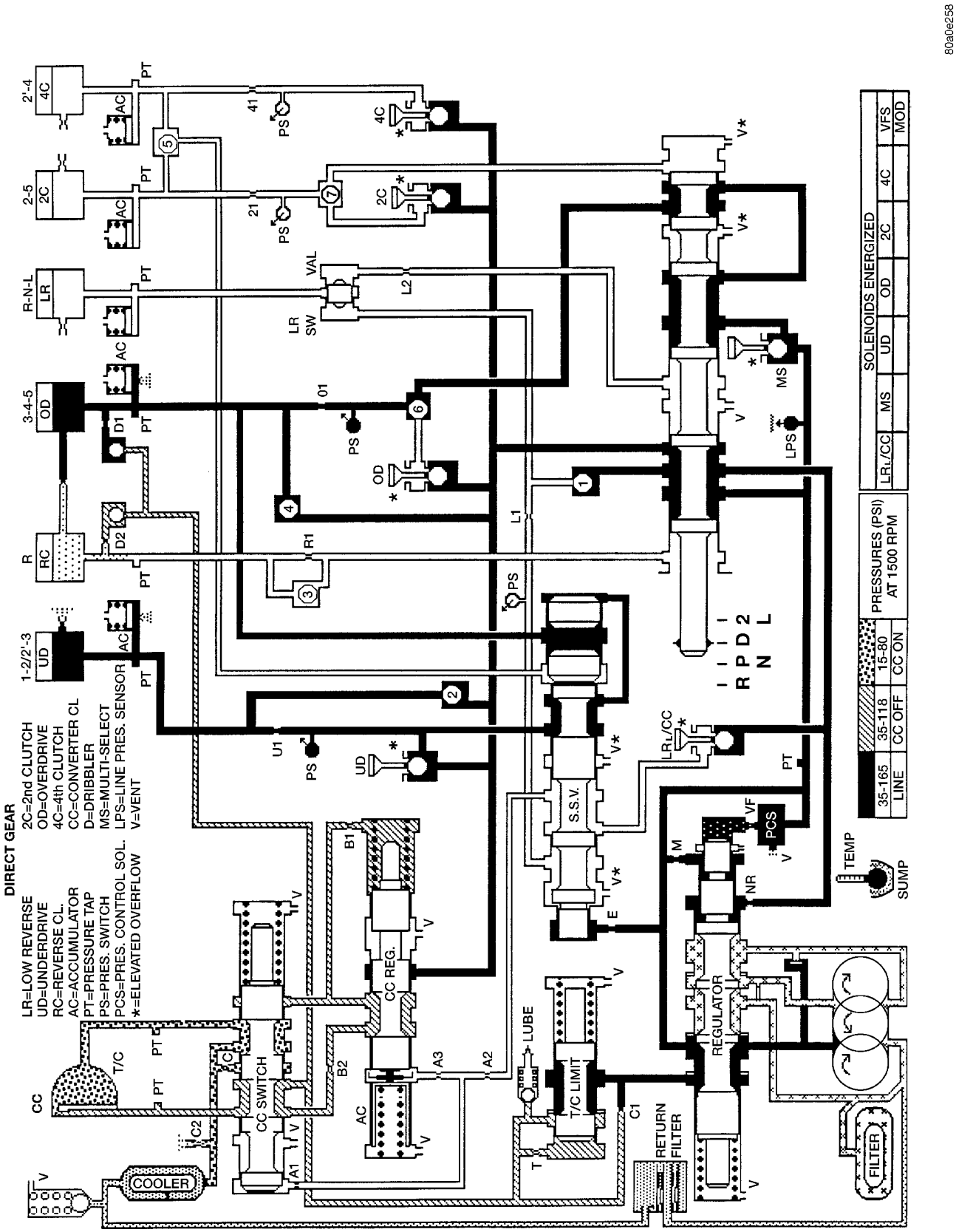

HYDRAULIC FLOW IN DIRECT GEAR

AUTOMATIC TRANSMISSION - 545RFE (Continued)

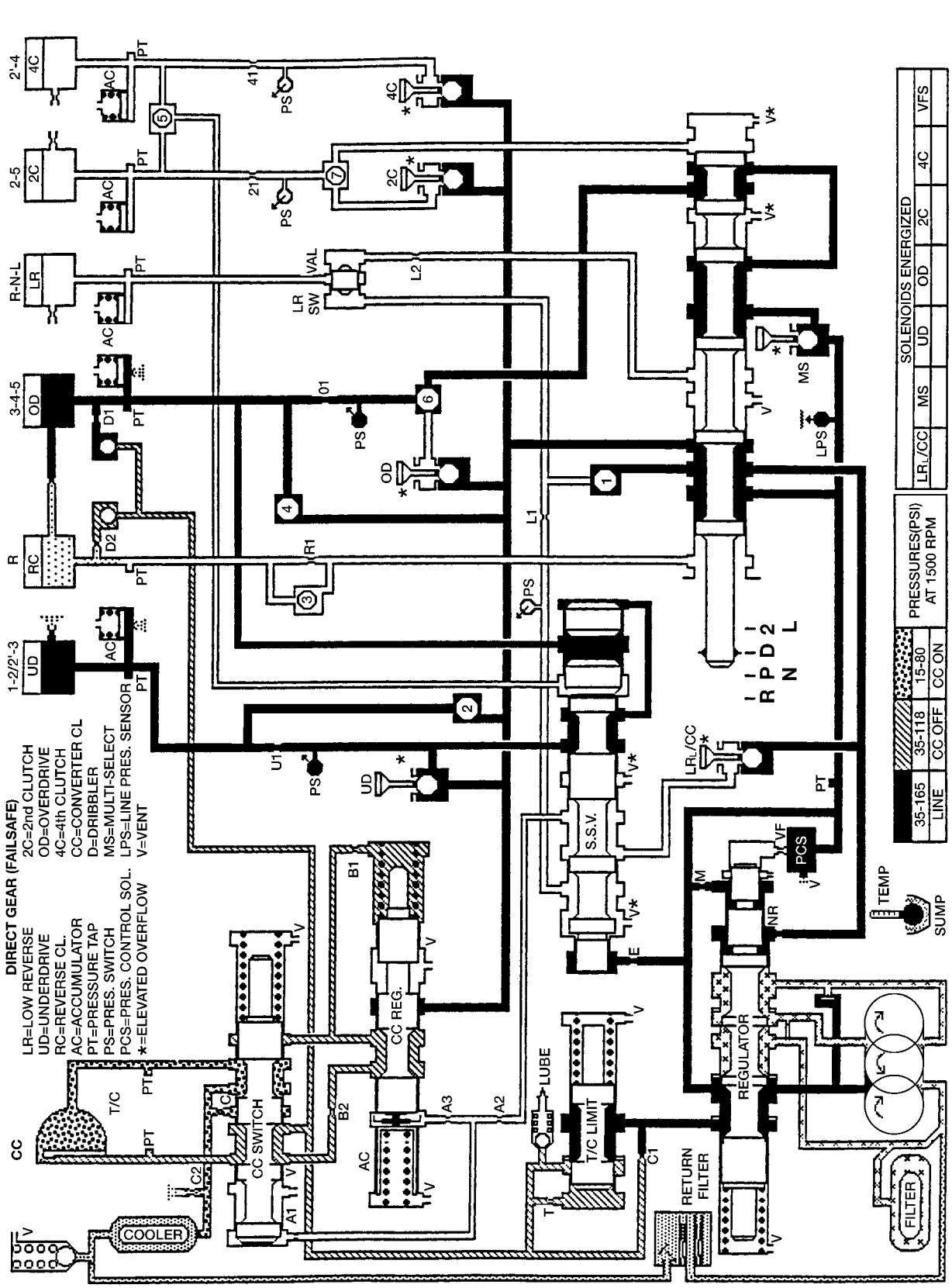

HYDRAULIC FLOW IN DIRECT GEAR (FAILSAFE)

AUTOMATIC TRANSMISSION - 545RFE (Continued)

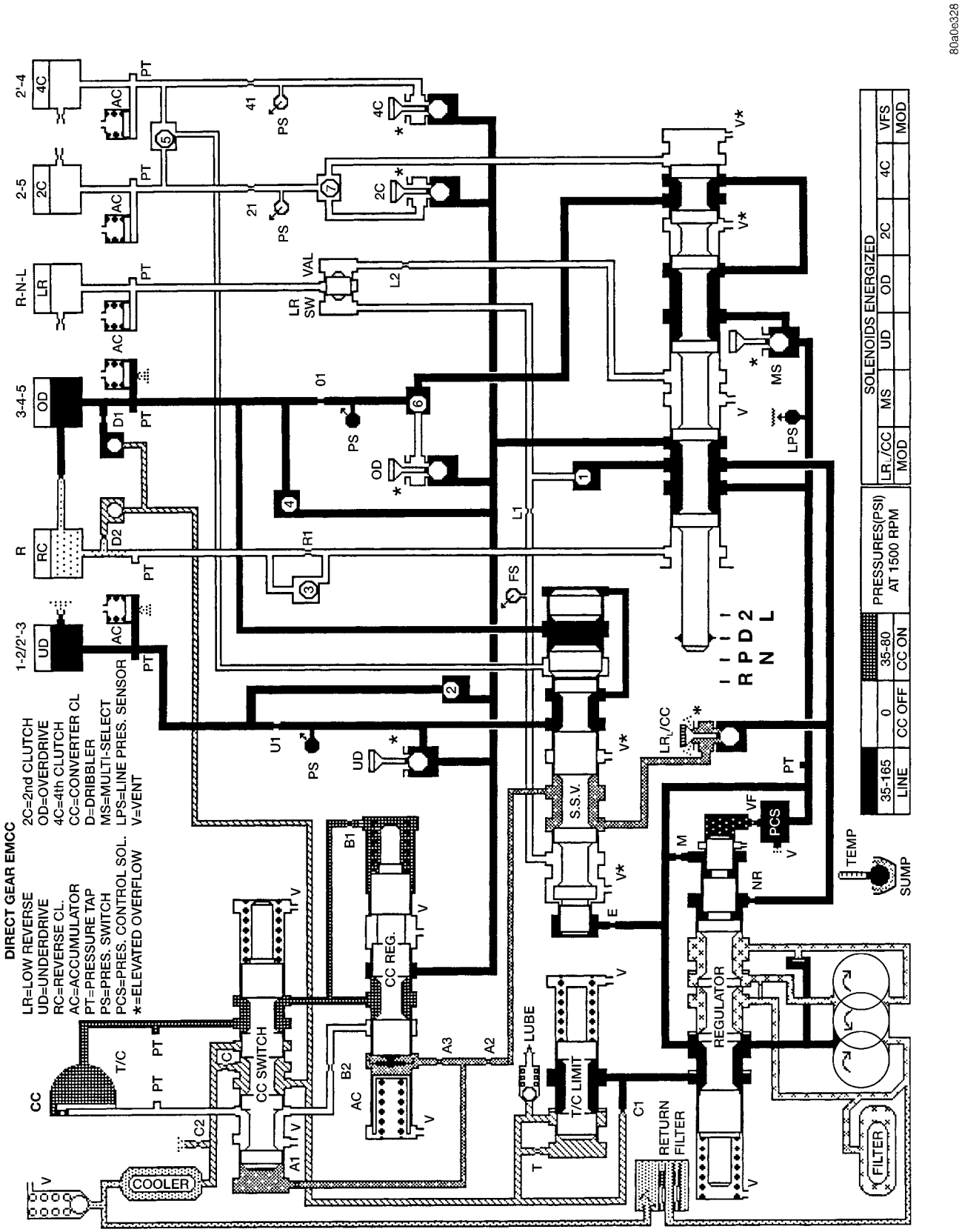

HYDRAULIC FLOW IN DIRECT GEAR EMCC

AUTOMATIC TRANSMISSION - 545RFE (Continued)

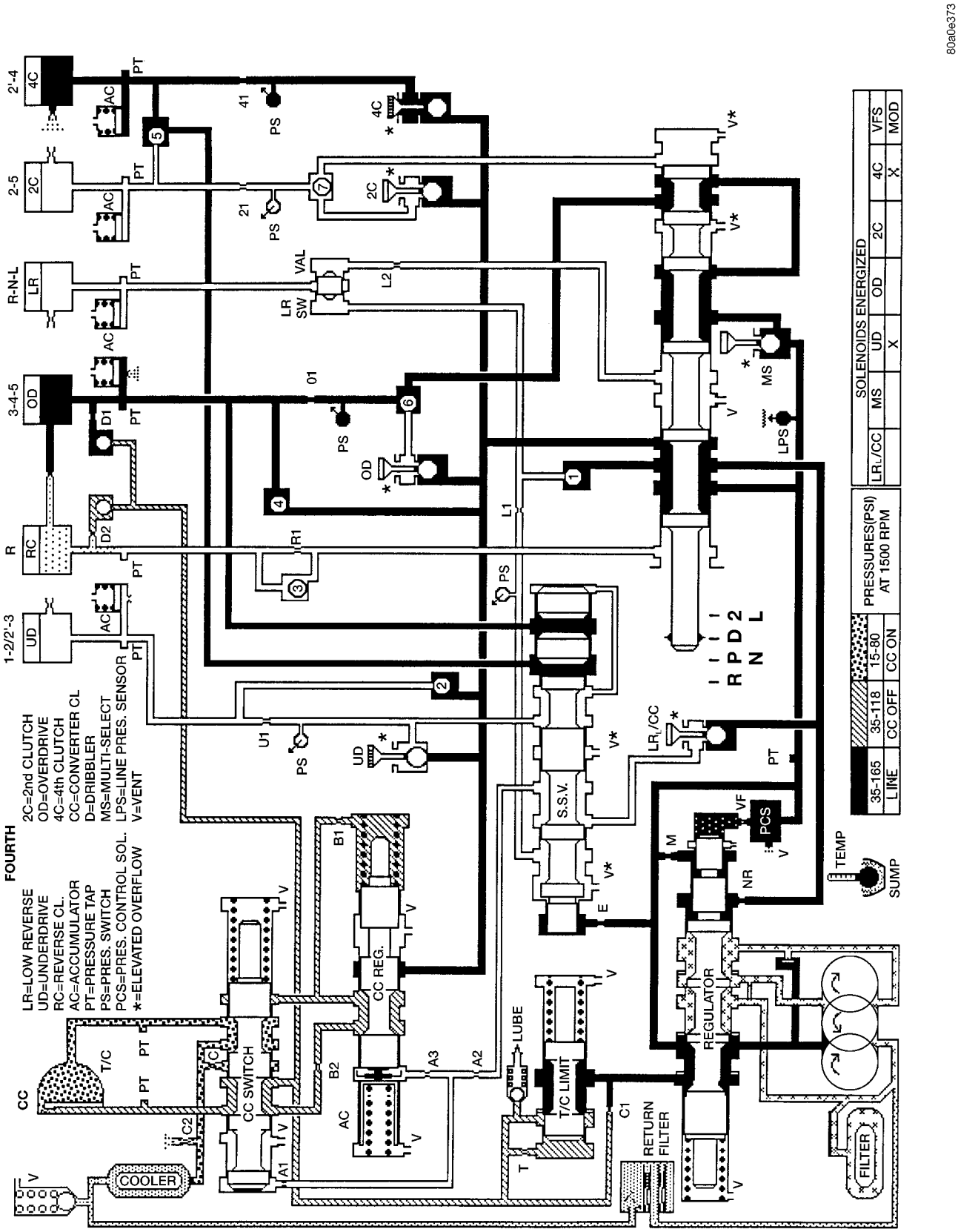

AUTOMATIC TRANSMISSION - 545RFE (Continued)

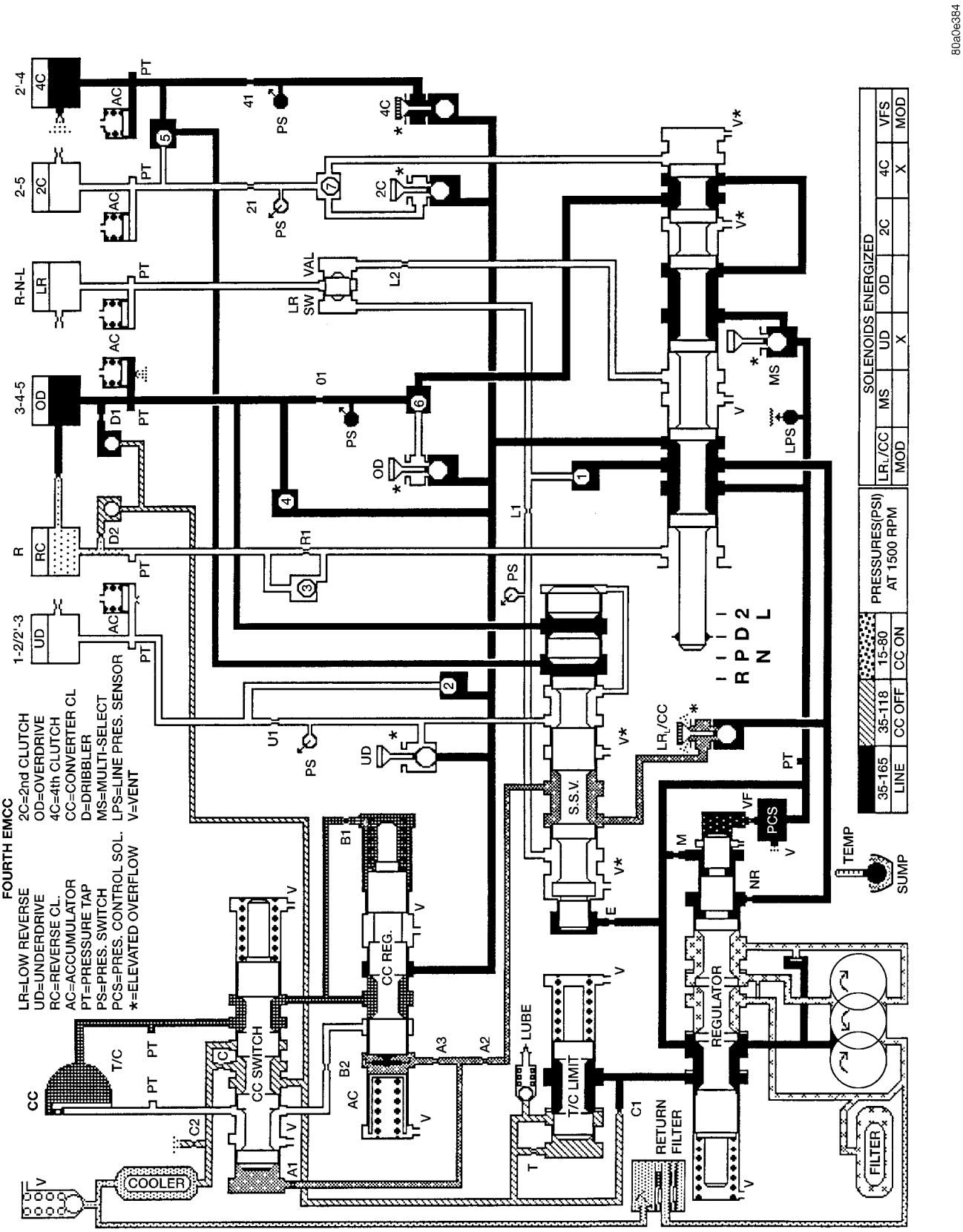

HYDRAULIC FLOW IN FOURTH EMCC

AUTOMATIC TRANSMISSION - 545RFE (Continued)

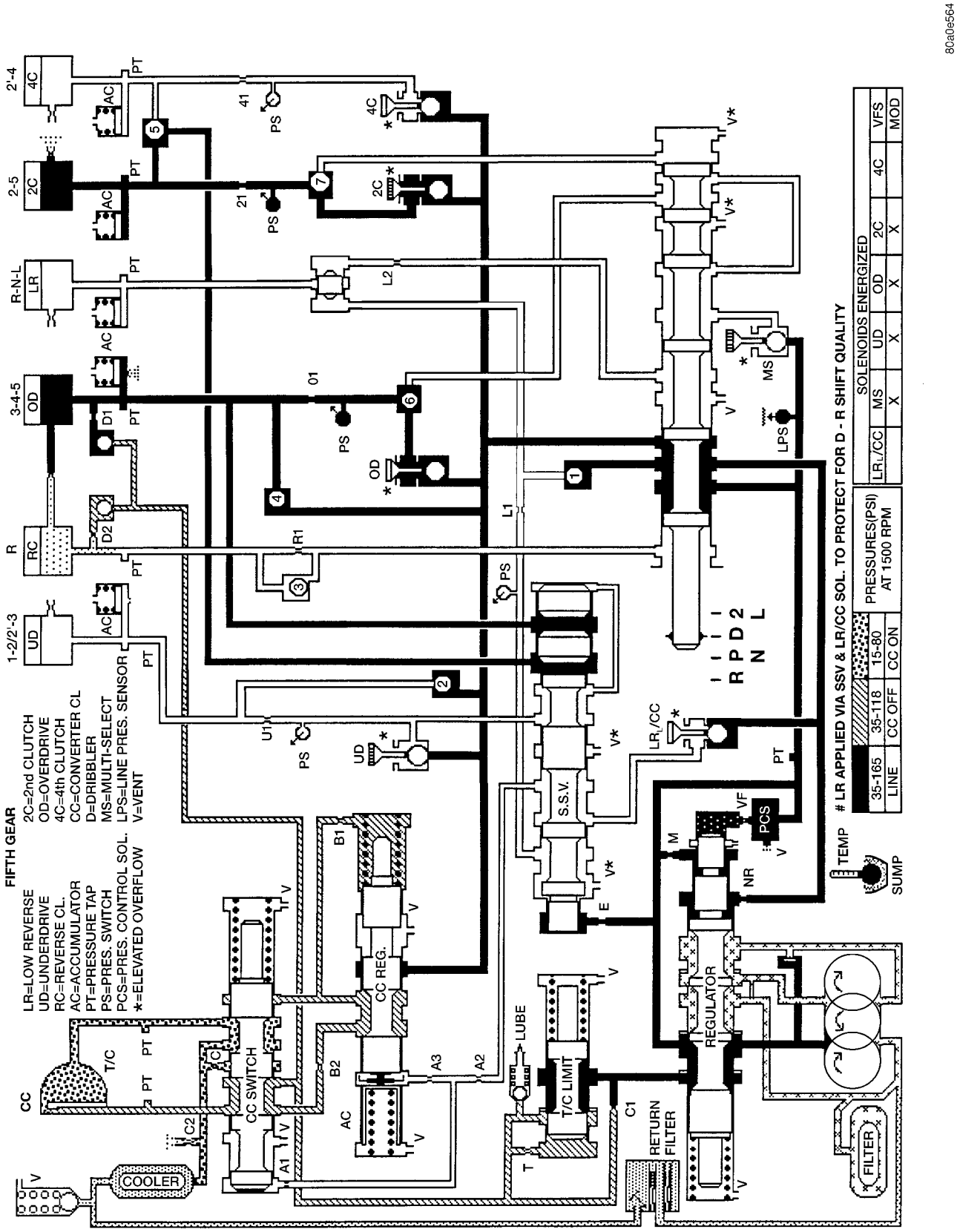

HYDRAULIC FLOW IN FIFTH

AUTOMATIC TRANSMISSION - 545RFE (Continued)

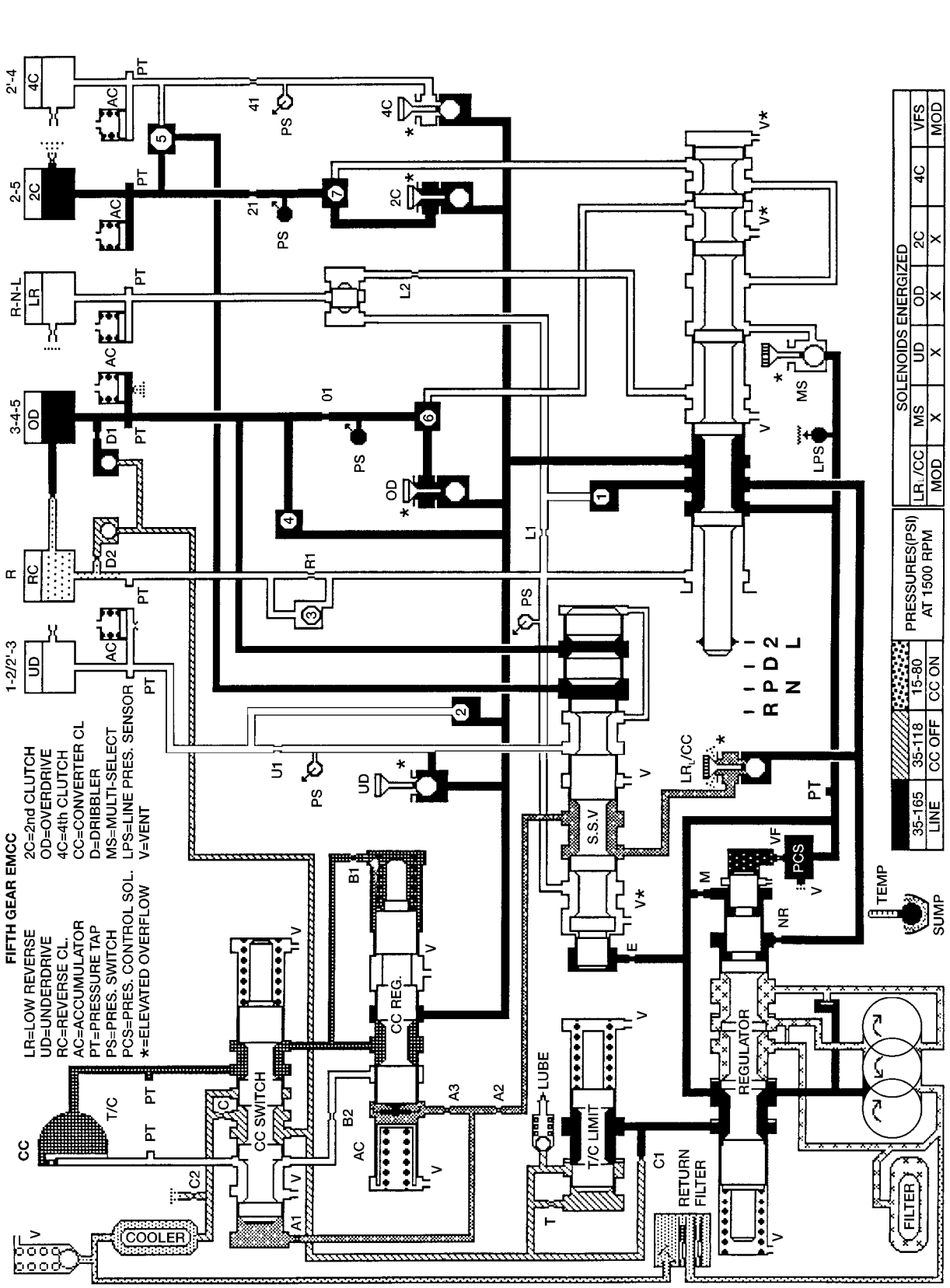

AUTOMATIC TRANSMISSION - 545RFE (Continued)

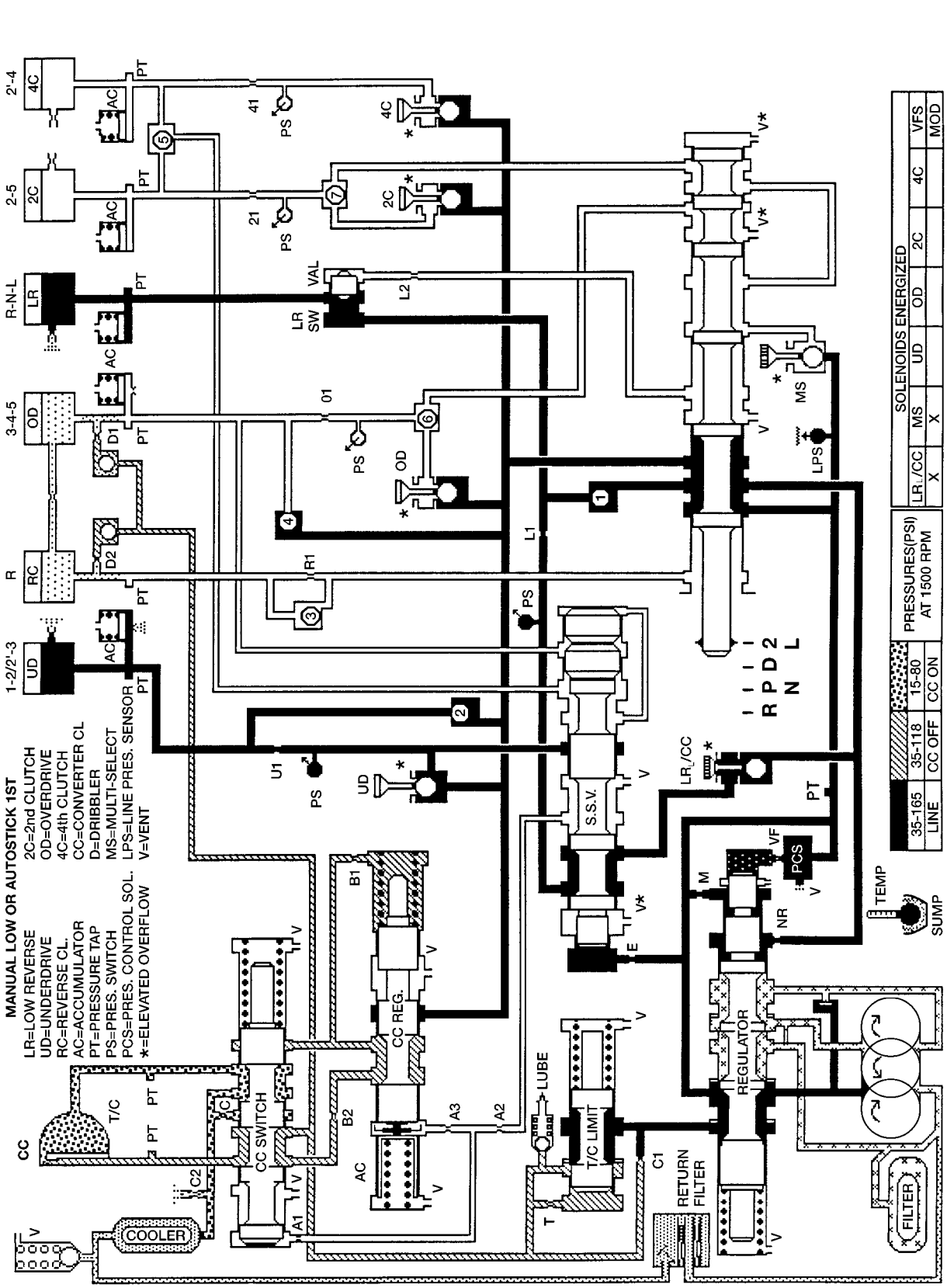

HYDRAULIC FLOW IN MANUAL LOW OR AUTOSTICK 1ST

AUTOMATIC TRANSMISSION - 545RFE (Continued)

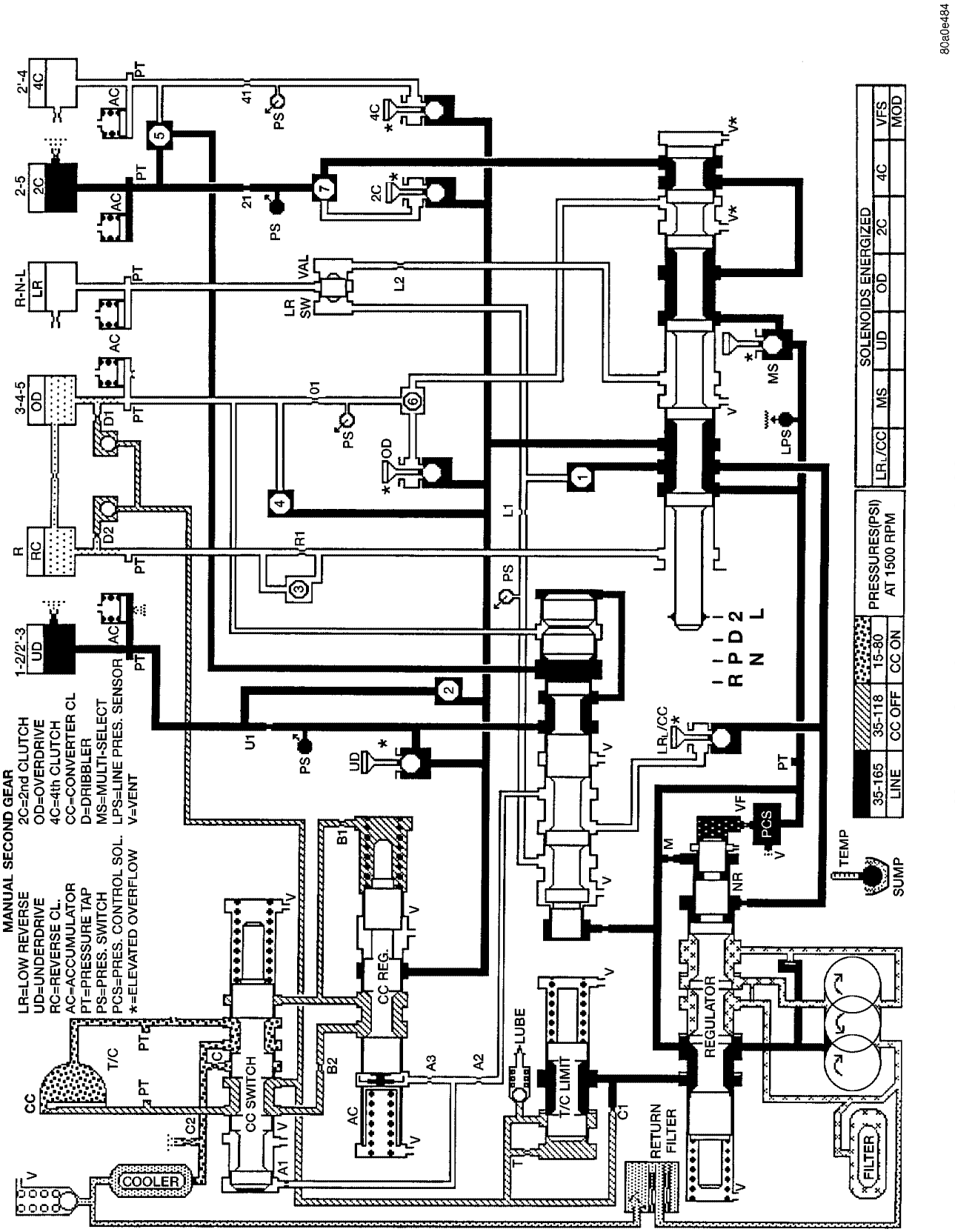

AUTOMATIC TRANSMISSION - 545RFE (Continued)

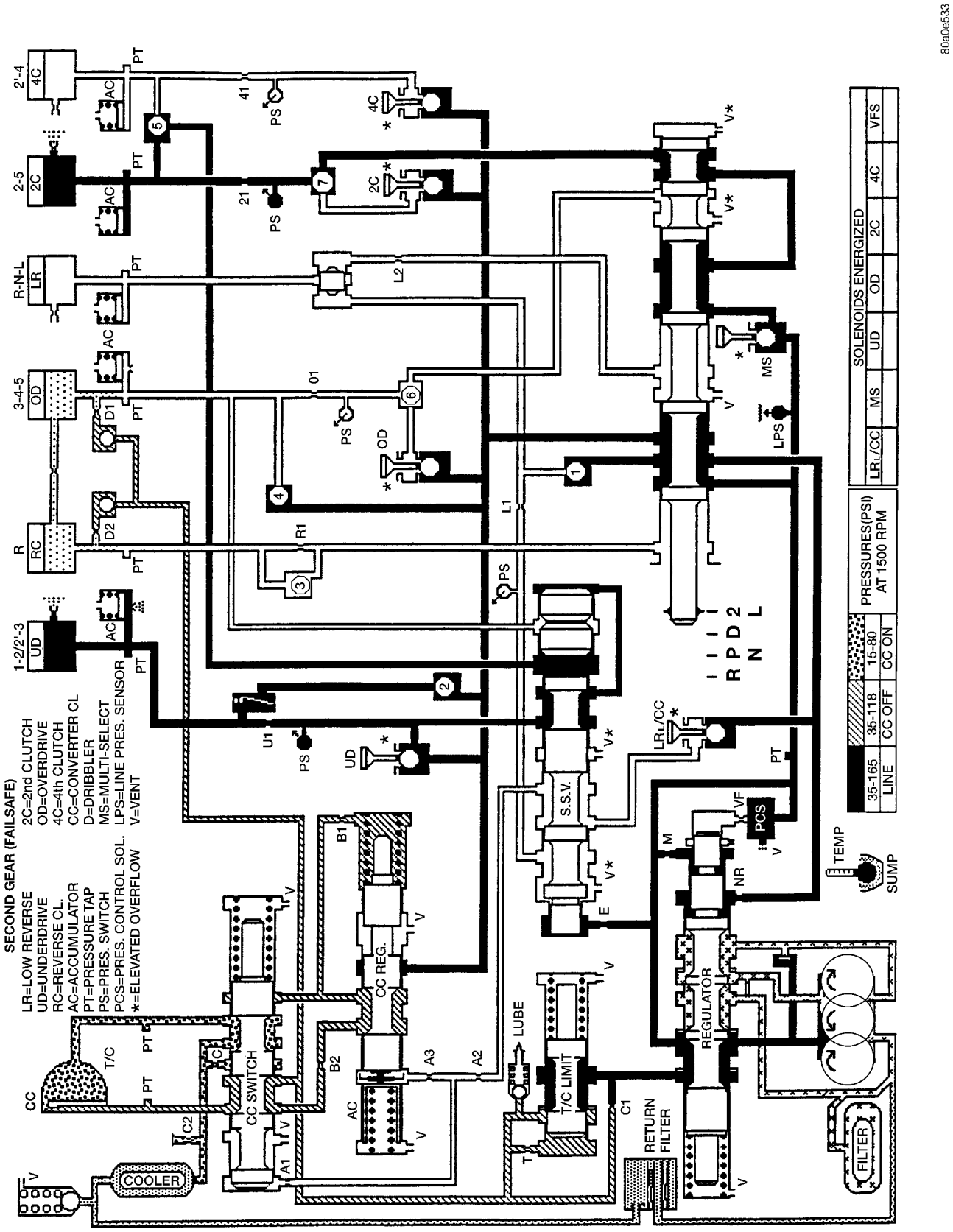

HYDRAULIC FLOW IN MANUAL SECOND (FAILSAFE)

AUTOMATIC TRANSMISSION - 545RFE (Continued)

SPECIFICATIONS

TRANSMISSION

GENERAL

Component	Metric	Inch
Output Shaft End Play	0.22-0.55 mm	0.009-0.021 in.
Input Shaft End Play	0.46-0.89 mm	0.018-0.035 in.
2C Clutch Pack Clearance	0.455-1.335 mm	0.018-0.053 in.
4C Clutch Pack Clearance	0.770-1.390 mm	0.030-0.055 in.
L/R Clutch Pack Clearance	1.00-1.74 mm	0.039-0.069 in.
OD Clutch Pack Clearance	1.103-1.856 mm	0.043-0.073 in.
UD Clutch Pack Clearance	0.84-1.54 mm	0.033-0.061 in.
Reverse Clutch Pack Clearance	0.81-1.24 mm	0.032-0.049 in.
Recommended fluid	Mopar® ATF +4	

GEAR RATIOS

1ST	3.00:1
2ND	1.67:1
2ND Prime	1.50:1
3RD	1.0:1
4TH	0.75:1
5TH	0.67:1
REVERSE	3.00:1

TORQUE SPECIFICATIONS

DESCRIPTION	N·m	Ft. Lbs.	In. Lbs.
Fitting, cooler line at trans	17.5	-	155
Bolt, torque convertor	31	23	-
Bolt/nut, crossmember	68	50	-
Bolt, driveplate to crankshaft	75	55	-
Bolt, oil pan	11.8	-	105
Screw, primary fluid filter	4.5	-	40
Bolt, oil pump	28.2	-	250
Bolt, oil pump body to cover	4.5	-	40
Screw, plate to oil pump body	4.5	-	40
Bolt, valve body to case	11.8	-	105
Plug, pressure test port	5.1	-	45
Bolt, reaction shaft support	11.8	-	105
Screw, valve body to transfer plate	5.6	-	50
Screw, solenoid module to transfer plate	5.7	-	50
Screw, accumulator cover	7	-	60
Screw, detent spring	4.5	-	40
Bolt, input speed sensor	11.8	-	105
Bolt, output speed sensor	11.8	-	105
Bolt, line pressure sensor	11.8	-	105
Bolt, extension housing	54	40	-
Valve, cooler return filter bypass	4.5	-	40
Screw, manual valve cam retaining	4.5	-	40
Bolt, manual lever	28.2	-	250

AUTOMATIC TRANSMISSION - 545RFE (Continued)

SPECIAL TOOLS

AUTOMATIC TRANSMISSION - RFE

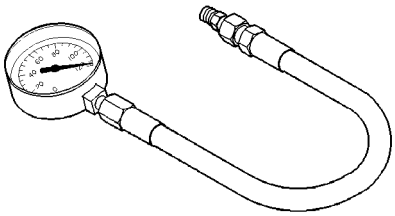

Gauge, Oil Pressure - C-3292

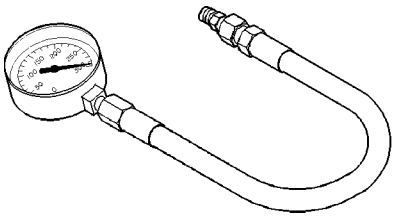

Gauge, Oil Pressure - C-3293SP

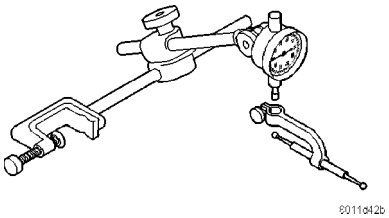

Dial Indicator - C-3339

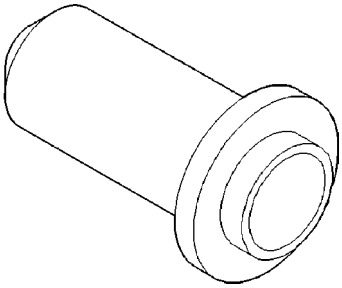

Installer, Seal - C-3860-A

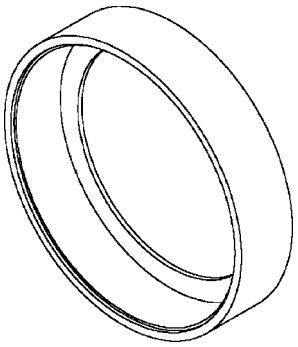

Compressor, Spring - 8249

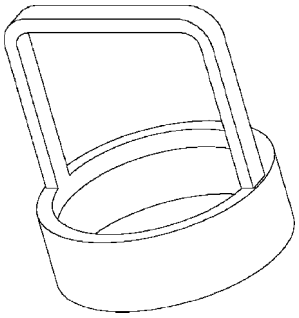

Compressor, Spring - 8250

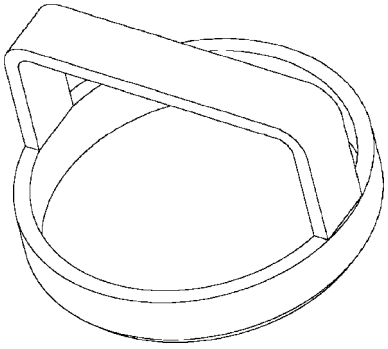

Compressor, Spring - 8251

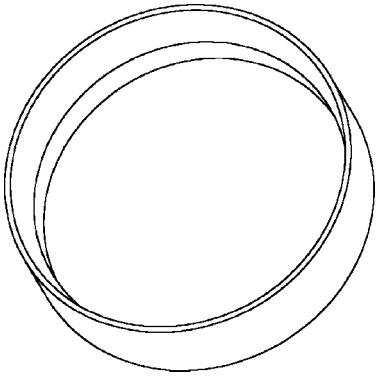

Installer, Piston - 8252

4C RETAINER/BULKHEAD (Continued)

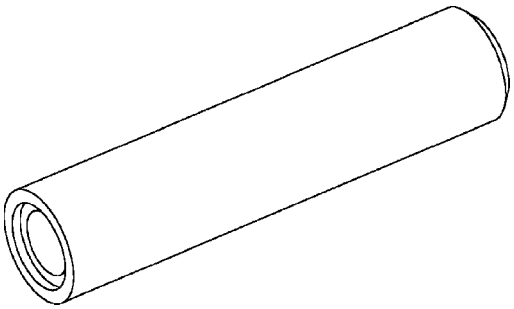

Installer, Seal - 8253

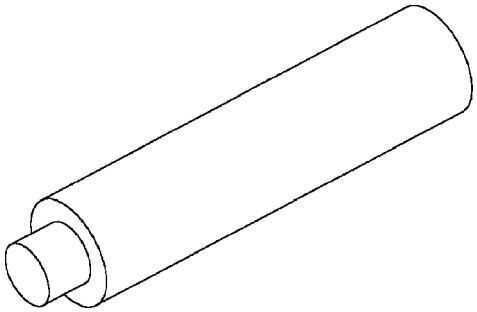

Installer, Seal - 8254

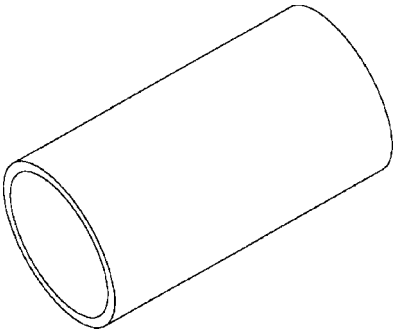

Installer, Snap-ring - 8255

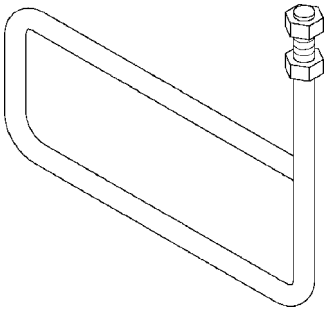

Stand, Support - 8257

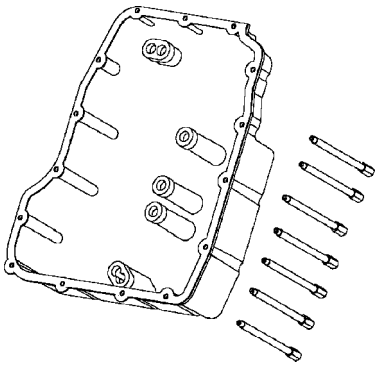

Adapter, Pressure Tap - 8258-A

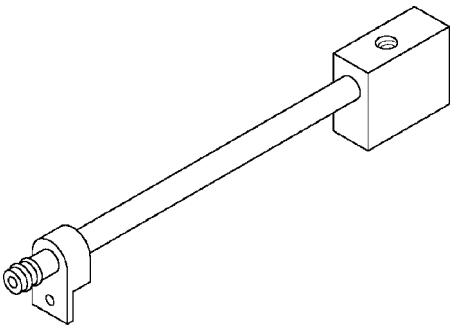

Adapter, Line Pressure - 8259

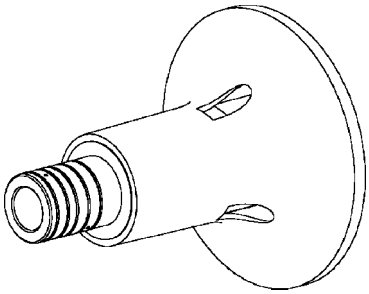

Fixture, Input Clutch Pressure - 8260

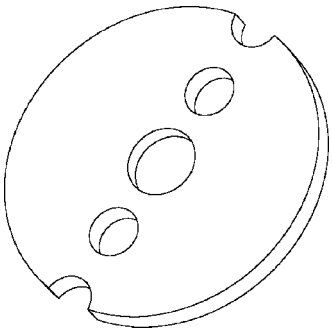

Plate, Alignment - 8261

4C RETAINER/BULKHEAD (Continued)

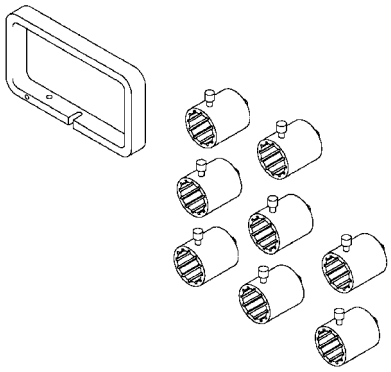

End Play Set - 8266

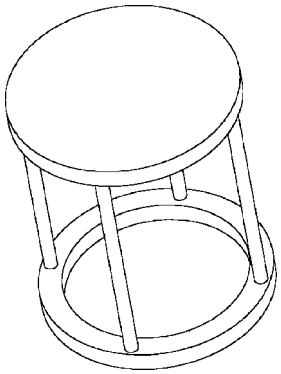

Compressor, Spring - 8285

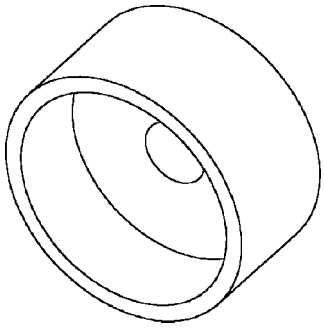

Installer, Bearing - 8320

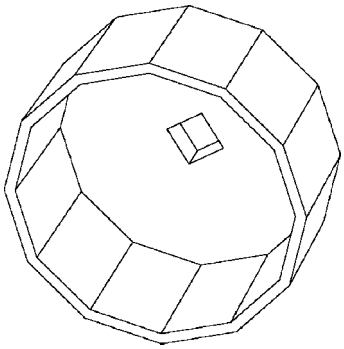

Wrench, Filter - 8321

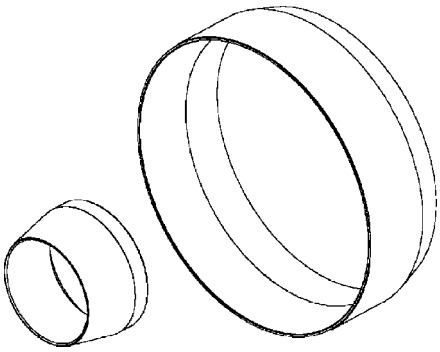

Installer, Piston - 8504

4C RETAINER/BULKHEAD

DISASSEMBLY

(1) Remove the 2C piston Belleville spring snap-ring (6) from the 4C retainer /bulkhead (13). (Fig. 69)

(2) Remove the 2C piston Belleville spring (5) from the retainer/bulkhead (13). (Fig. 69)

(3) Remove the 2C piston (2) from the retainer/bulkhead (13). Use 20 psi of air pressure to remove the piston if necessary.

(4) Remove the 4C clutch snap-ring (7) from the retainer/bulkhead (13). (Fig. 69)

(5) Remove the 4C clutch pack (3, 4, 8) from the retainer/bulkhead (13). (Fig. 69)

(6) Using Spring Compressor 8250 (2) (Fig. 70) and a suitable shop press (1), compress the 4C piston return spring (10) and remove the snap-ring (9). (Fig. 69)

(7) Remove the 4C piston return spring (10) (Fig. 69) and piston (12) from the retainer/bulkhead (13). Use 20 psi of air pressure to remove the piston if necessary.

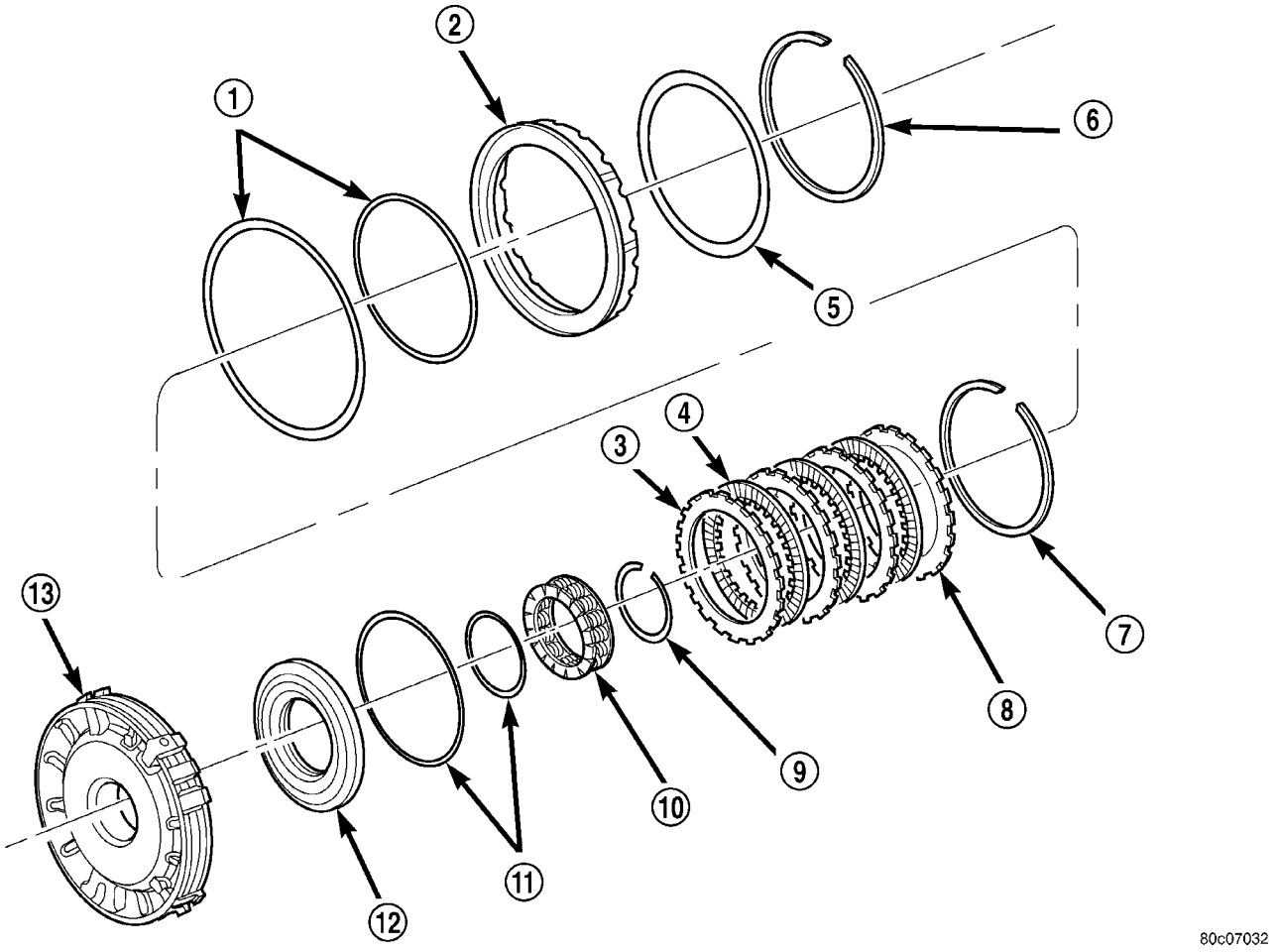

Fig. 69 4C Retainer/Bulkhead Components

1 - SEAL
2 - 2C PISTON
3 - PLATE
4 - DISC
5 - 2C BELLEVILLE SPRING
6 - SNAP-RING
7 - SNAP-RING (SELECT)
8 - REACTION PLATE
9 - SNAP-RING
10 - RETURN SPRING
11 - SEAL
12 - 4C PISTON
13 - 4C RETAINER/BULKHEAD

4C RETAINER/BULKHEAD (Continued)

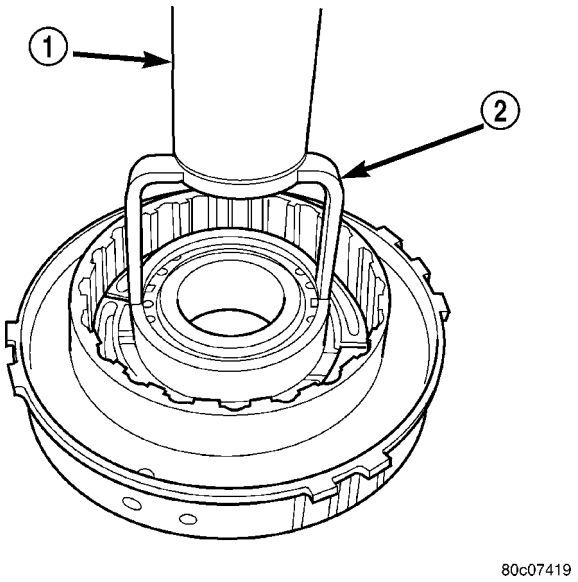

Fig. 70 Compress 4C Piston Return Spring Using Tool 8250

1 - PRESS
2 - TOOL 8250

ASSEMBLY

NOTE: Clean and inspect all components. Replace any components which show evidence of excessive wear or scoring.

(1) Install new seals (1, 11) on the 2C and 4C pistons. (Fig. 71)

(2) Lubricate all seals with Mopar® ATF +4 prior to installation.

(3) Install the 4C piston (12) into the 4C retainer/bulkhead (13). (Fig. 71)

(4) Position the 4C piston return spring (10) onto the 4C piston (12).

(5) Using Spring Compressor 8250 (2) and a suitable shop press (1), compress the 4C piston return spring and install the snap-ring. (Fig. 72)

(6) Assemble and install the 4C clutch pack (3, 4) into the retainer/bulkhead (13) (Fig. 71) with the steel separator plate against the piston.

(7) Install the 4C reaction plate (8) (Fig. 71) and snap-ring (7) into the retainer/bulkhead (13). The 4C reaction plate is non-directional.

(8) Measure the 4C clutch clearance. The correct clutch clearance is 0.77-1.39 mm (0.030-0.055 in.). The snap-ring (7) is selectable. Install the chosen snap-ring and re-measure to verify the selection.

(9) Install the 2C piston (2) into the retainer/bulkhead (13). (Fig. 71)

(10) Position the 2C Belleville spring (5) onto the 2C piston (2).

4C RETAINER/BULKHEAD (Continued)

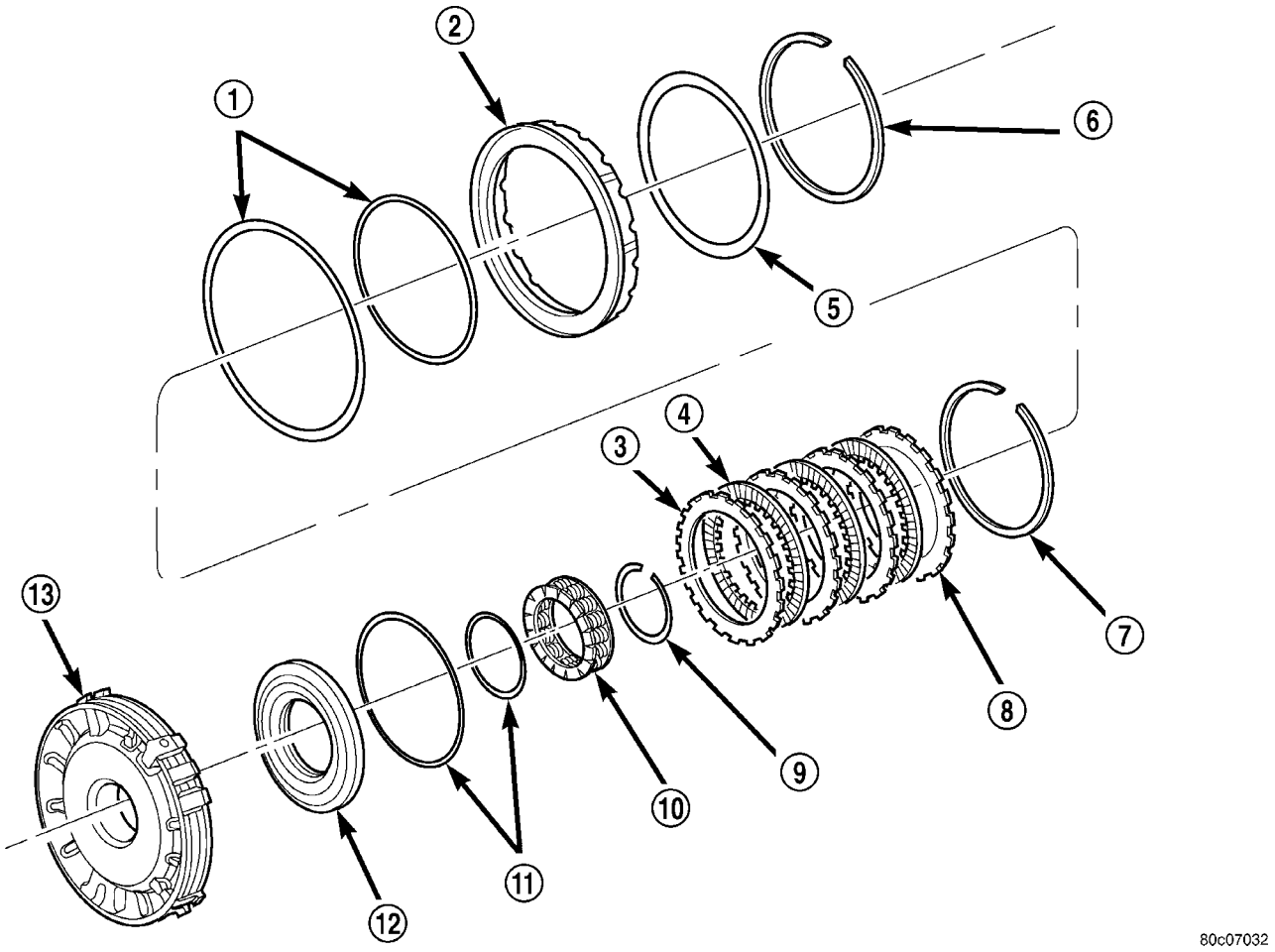

Fig. 71 4C Retainer/Bulkhead Components

1 - SEAL
2 - 2C PISTON
3 - PLATE
4 - DISC
5 - 2C BELLEVILLE SPRING
6 - SNAP-RING
7 - SNAP-RING (SELECT)
8 - REACTION PLATE
9 - SNAP-RING
10 - RETURN SPRING
11 - SEAL
12 - 4C PISTON
13 - 4C RETAINER/BULKHEAD

(11) Position the 2C Belleville spring snap-ring (6) onto the 2C Belleville spring (5). (Fig. 71)

4C RETAINER/BULKHEAD (Continued)

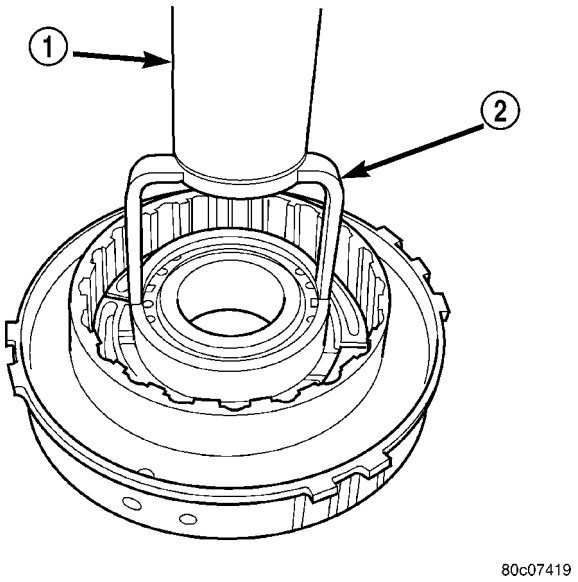

Fig. 72 Compress 4C Piston Return Spring Using Tool 8250

1 - PRESS
2 - TOOL 8250

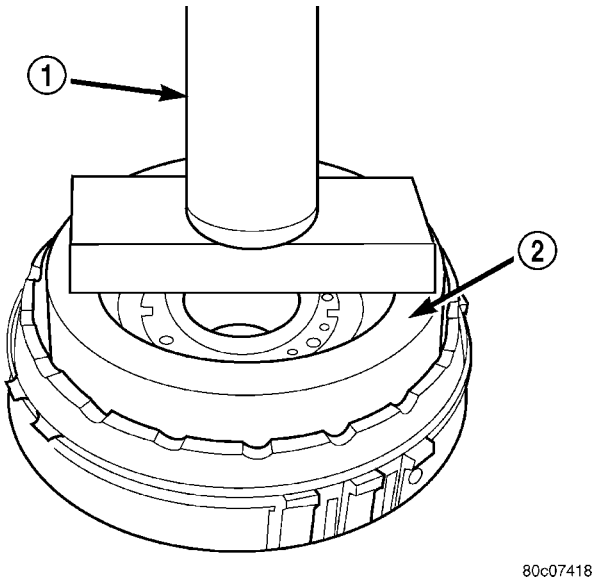

Fig. 73 Compress 2C Belleville Spring Using Tool 8249

1 - PRESS
2 - TOOL 8249

(12) Using Spring Compressor 8249 (2) (Fig. 73) and a suitable shop press (1), compress the Belleville spring (5) until the snap-ring (6) is engaged with the snap-ring groove in the retainer/bulkhead.

ADAPTER HOUSING SEAL

REMOVAL

(1) Remove the transfer case from the transmission.

(2) Using a screw mounted on a slide hammer, remove the adapter housing seal.

INSTALLATION

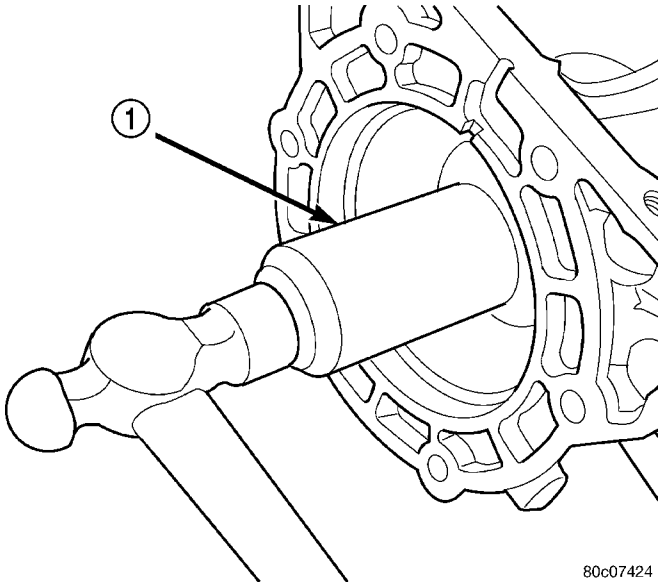

Fig. 74 Adapter Housing Seal Installation

1 - TOOL C-3860-A

(1) Clean the adapter seal bore in the adapter housing of any residue or particles remaining from the original seal.

(2) Install new oil seal in the adapter housing using Seal Installer C-3860-A (1) (Fig. 74). A properly installed seal is flush to the face of the seal bore.

(3) Install the transfer case onto the transmission.

BRAKE TRANSMISSION SHIFT INTERLOCK SYSTEM

DESCRIPTION

The Brake Transmission Shift Interlock Sytem (BTSI), consists of a Park-Interlock cable and a solenoid mounted in the shift lever assembly. The Park-Interlock cable connects the automatic transmission floor mounted shifter to the steering column ignition switch.

OPERATION

The system locks the shifter into the PARK position. The interlock system is engaged whenever the ignition switch is in the LOCK or ACCESSORY posi-

BRAKE TRANSMISSION SHIFT INTERLOCK SYSTEM (Continued)

tion. An additional electrically activated feature will prevent shifting out of the PARK position unless the brake pedal is depressed approximately one-half an inch. A magnetic holding device in the shift lever assembly is energized when the ignition is in the RUN position. When the key is in the RUN position and the brake pedal is depressed, the shifter is unlocked and will move into any position. The interlock system also prevents the ignition switch from being turned to the LOCK or ACCESSORY position, unless the shifter is fully locked into the PARK position.

DIAGNOSIS AND TESTING - BRAKE TRANSMISSION SHIFT INTERLOCK SYSTEM

(1) Verify that the key can only be removed in the PARK position

(2) When the shift lever is in PARK And the shift handle pushbutton is in the “OUT” position, the ignition key cylinder should rotate freely from OFF to LOCK. When the shifter is in any other gear or neutral position, the ignition key cylinder should not rotate to the LOCK position.

(3) Shifting out of PARK should not be possible when the ignition key cylinder is in the OFF position.

(4) Shifting out of PARK should not be possible while applying normal pushbutton force and ignition key cylinder is in the RUN or START positions unless the foot brake pedal is depressed approximately 1/2 inch (12mm).

(5) Shifting out of PARK should not be possible when the ignition key cylinder is in the ACCESSORY or LOCK positions.

(6) Shifting between any gears, NEUTRAL or into PARK may be done without depressing foot brake pedal with ignition switch in RUN or START positions.

FLUID AND FILTER

DIAGNOSIS AND TESTING

EFFECTS OF INCORRECT FLUID LEVEL

A low fluid level allows the pump to take in air along with the fluid. Air in the fluid will cause fluid pressures to be low and develop slower than normal. If the transmission is overfilled, the gears churn the fluid into foam. This aerates the fluid and causing the same conditions occurring with a low level. In either case, air bubbles cause fluid overheating, oxidation, and varnish buildup which interferes with valve and clutch operation. Foaming also causes fluid expansion which can result in fluid overflow from the transmission vent or fill tube. Fluid overflow can easily be mistaken for a leak if inspection is not careful.

CAUSES OF BURNT FLUID

Burnt, discolored fluid is a result of overheating which has three primary causes.

(1) Internal clutch slippage, usually caused by low line pressure, inadequate clutch apply pressure, or clutch seal failure.

(2) A result of restricted fluid flow through the main and/or auxiliary cooler. This condition is usually the result of a faulty or improperly installed drainback valve, a damaged oil cooler, or severe restrictions in the coolers and lines caused by debris or kinked lines.

(3) Heavy duty operation with a vehicle not properly equipped for this type of operation. Trailer towing or similar high load operation will overheat the transmission fluid if the vehicle is improperly equipped. Such vehicles should have an auxiliary transmission fluid cooler, a heavy duty cooling system, and the engine/axle ratio combination needed to handle heavy loads.

FLUID CONTAMINATION

Transmission fluid contamination is generally a result of:

- adding incorrect fluid
- failure to clean dipstick and fill tube when checking level
- engine coolant entering the fluid
- internal failure that generates debris
- overheat that generates sludge (fluid breakdown)
- failure to replace contaminated converter after repair

The use of non-recommended fluids can result in transmission failure. The usual results are erratic shifts, slippage, abnormal wear and eventual failure due to fluid breakdown and sludge formation. Avoid this condition by using recommended fluids only.

The dipstick cap and fill tube should be wiped clean before checking fluid level. Dirt, grease and other foreign material on the cap and tube could fall into the tube if not removed beforehand. Take the time to wipe the cap and tube clean before withdrawing the dipstick.

Engine coolant in the transmission fluid is generally caused by a cooler malfunction. The only remedy is to replace the radiator as the cooler in the radiator is not a serviceable part. If coolant has circulated through the transmission, an overhaul is necessary.

The torque converter should be replaced whenever a failure generates sludge and debris. This is necessary because normal converter flushing procedures will not remove all contaminants.

FLUID AND FILTER (Continued)

STANDARD PROCEDURE

FLUID LEVEL CHECK

Low fluid level can cause a variety of conditions because it allows the pump to take in air along with the fluid. As in any hydraulic system, air bubbles make the fluid spongy, therefore, pressures will be low and build up slowly.

Improper filling can also raise the fluid level too high. When the transmssion has too much fluid, the geartrain churns up foam and cause the same conditions which occur with a low fluid level.

In either case, air bubbles can cause overheating and/or fluid oxidation, and varnishing. This can interfere with normal valve, clutch, and accumulator operation. Foaming can also result in fluid escaping from the transmission vent where it may be mistaken for a leak.

After the fluid has been checked, seat the dipstick fully to seal out water and dirt.

The transmission has a dipstick to check oil level. It is located on the right side of the engine. Be sure to wipe all dirt from dipstick handle before removing.

The torque converter fills in both the P (PARK) and N (NEUTRAL) positions. Place the selector lever in P (PARK) to be sure that the fluid level check is accurate. **The engine should be running at idle speed for at least one minute, with the vehicle on level ground.** At normal operating temperature (approximately 82 C. or 180 F.), the fluid level is correct if it is in the HOT region (cross-hatched area) on the oil level indicator. The fluid level will be approximately at the upper COLD hole of the dipstick at 70° F fluid temperature.

NOTE: Engine and Transmission should be at normal operating temperature before performing this procedure.

(1) Start engine and apply parking brake.
(2) Shift the transmission into DRIVE for approximately 2 seconds.
(3) Shift the transmission into REVERSE for approximately 2 seconds.
(4) Shift the transmission into PARK.
(5) Hook up scan tool and select transmission.
(6) Select sensors.
(7) Read the transmission temperature value.
(8) Compare the fluid temperature value with the chart. (Fig. 75)
(9) Adjust transmission fluid level shown on the dipstick according to the Transmission Fluid Temperature Chart.

NOTE: After adding any fluid to the transmission, wait a minimum of 2 minutes for the oil to fully drain from the fill tube into the transmission before rechecking the fluid level.

(10) Check transmission for leaks.

FLUID AND FILTER REPLACEMENT

For proper service intervals (Refer to LUBRICATION & MAINTENANCE/MAINTENANCE SCHEDULES - DESCRIPTION).

REMOVAL

(1) Hoist and support vehicle on safety stands.
(2) Place a large diameter shallow drain pan beneath the transmission pan.
(3) Remove bolts holding front and sides of pan to transmission.
(4) Loosen bolts holding rear of pan to transmission.
(5) Slowly separate front of pan away from transmission allowing the fluid to drain into drain pan.
(6) Hold up pan and remove remaining bolts holding pan to transmission.
(7) While holding pan level, lower pan away from transmission.
(8) Pour remaining fluid in pan into drain pan.
(9) Remove the screw holding the primary oil filter (1) to valve body. (Fig. 76)
(10) Separate filter from valve body and oil pump and pour fluid in filter into drain pan.
(11) Remove and discard the oil filter seal from the bottom of the oil pump.
(12) If replacing the cooler return filter (2), use Oil Filter Wrench 8321 to remove the filter from the transmission.
(13) Dispose of used trans fluid and filter(s) properly.

INSPECTION

Inspect bottom of pan and magnet for excessive amounts of metal. A light coating of clutch material on the bottom of the pan does not indicate a problem unless accompanied by a slipping condition or shift lag. If fluid and pan are contaminated with excessive amounts of debris, refer to the diagnosis section of this group.

CLEANING

(1) Using a suitable solvent, clean pan and magnet.
(2) Using a suitable gasket scraper, clean original sealing material from surface of transmission case and the transmission pan.

FLUID AND FILTER (Continued)

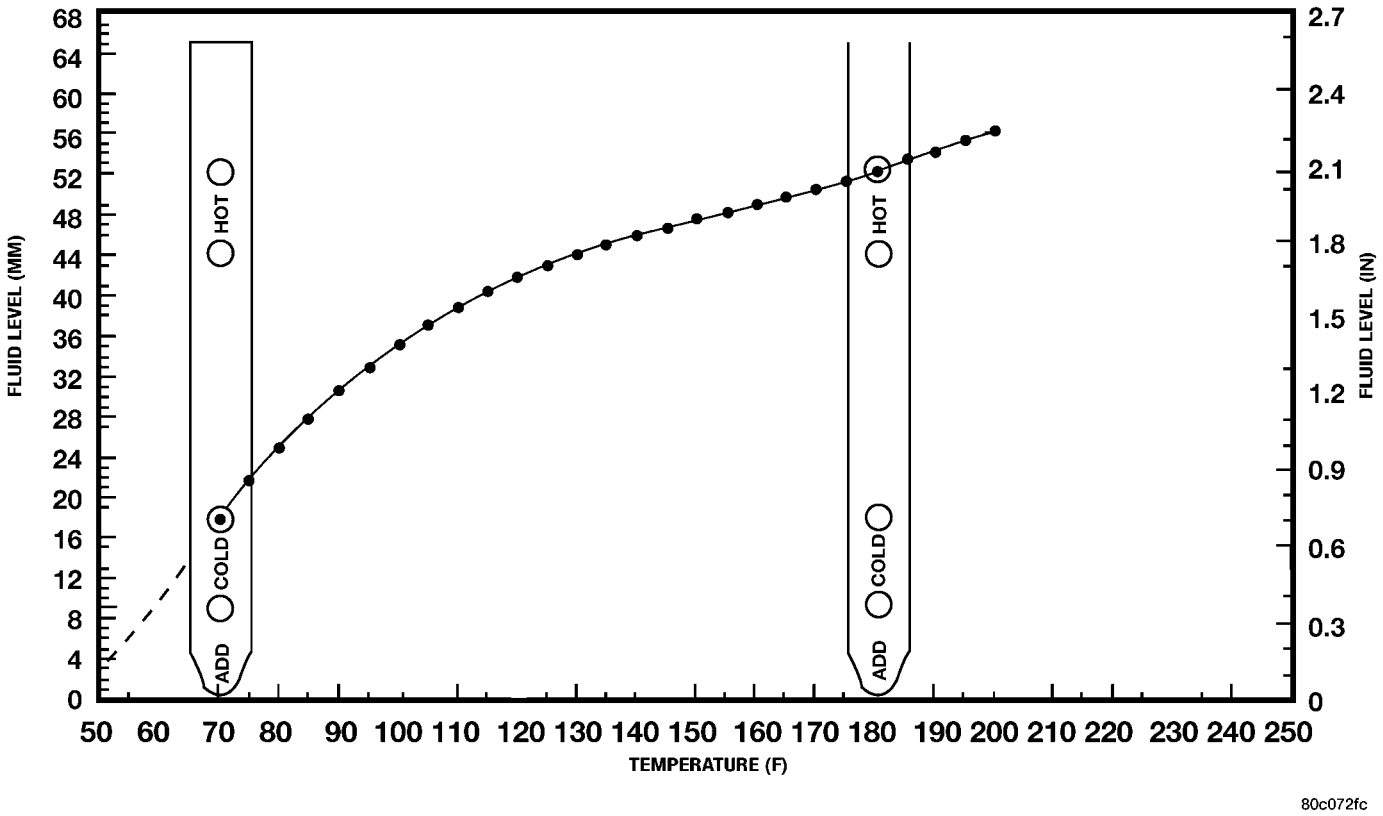

Fig. 75 Transmission Fluid Temperature Chart

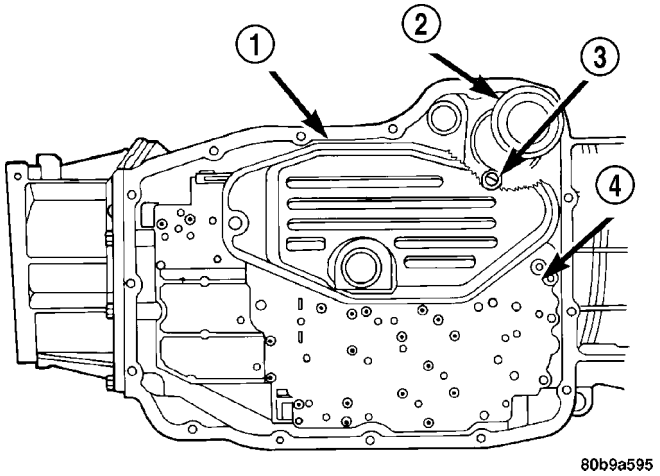

Fig. 76 Transmission Filters - 4X4 Shown

1 - PRIMARY OIL FILTER
2 - COOLER RETURN FILTER
3 - COOLER RETURN FILTER BYPASS VALVE
4 - VALVE BODY

INSTALLATION

CAUTION: The primary oil filter seal MUST be fully installed flush against the oil pump body. DO NOT install the seal onto the filter neck and attempt to install the filter and seal as an assembly. Damage to the transmission will result.

(1) Install a new primary oil filter seal in the oil pump inlet bore. Seat the seal in the bore with the butt end of a hammer, or other suitable tool.

(2) Place replacement filter in position on valve body and into the oil pump.

(3) Install screw to hold the primary oil filter (1) (Fig. 76) to valve body. Tighten screw to 4.5 N·m (40 in. lbs.) torque.

(4) Install new cooler return filter (2) onto the transmission, if necessary. Torque the filter to 14.12 N·m (125 in.lbs.).

(5) Place bead of Mopar® RTV sealant onto the transmission case sealing surface.

(6) Place pan in position on transmission.

(7) Install bolts to hold pan to transmission. Tighten bolts to 11.8 N·m (105 in. lbs.) torque.

(8) Lower vehicle and fill transmission with Mopar® ATF +4.

TRANSMISSION FILL

To avoid overfilling transmission after a fluid change or overhaul, perform the following procedure:

(1) Remove dipstick and insert clean funnel in transmission fill tube.

FLUID AND FILTER (Continued)

(2) Add following initial quantity of Mopar® ATF +4 to transmission:

(a) If only fluid and filter were changed, add **10 pints (5 quarts)** of ATF +4 to transmission.

(b) If transmission was completely overhauled and the torque converter was replaced or drained, add **24 pints (12 quarts)** of ATF +4 to transmission.

(3) Check the transmission fluid (Refer to 21 - TRANSMISSION/AUTOMATIC - RFE/FLUID - STANDARD PROCEDURE) and adjust as required.

GEARSHIFT CABLE

DIAGNOSIS AND TESTING

GEARSHIFT CABLE

(1) The floor shifter lever and gate positions should be in alignment with all transmission PARK, NEUTRAL, and gear detent positions.

(2) Engine starts must be possible with floor shift lever in PARK or NEUTRAL gate positions only. Engine starts must not be possible in any other gear position.

(3) With floor shift lever handle push-button not depressed and lever in:

(a) PARK position - Apply forward force on center of handle and remove pressure. Engine starts must be possible.

(b) PARK position - Apply rearward force on center of handle and remove pressure. Engine starts must be possible.

(c) NEUTRAL position - Normal position. Engine starts must be possible.

(d) NEUTRAL position - Engine running and brakes applied, apply forward force on center of shift handle. Transmission shall not be able to shift from NEUTRAL to REVERSE.

REMOVAL

(1) Shift transmission into PARK.

(2) Raise vehicle.

(3) Remove the shift cable eyelet from the transmission manual shift lever (Fig. 77).

(4) Remove shift cable from the cable support bracket.

(5) Lower vehicle.

(6) Remove necessary console parts for access to shift lever assembly and shift cable. (Refer to 23 - BODY/INTERIOR/FLOOR CONSOLE - REMOVAL)

(7) Disconnect cable at shift lever and shifter assembly bracket (Fig. 78).

(8) Remove the nuts holding the shift cable seal plate to the floor pan (Fig. 79).

(9) Pull cable through floor panel opening.

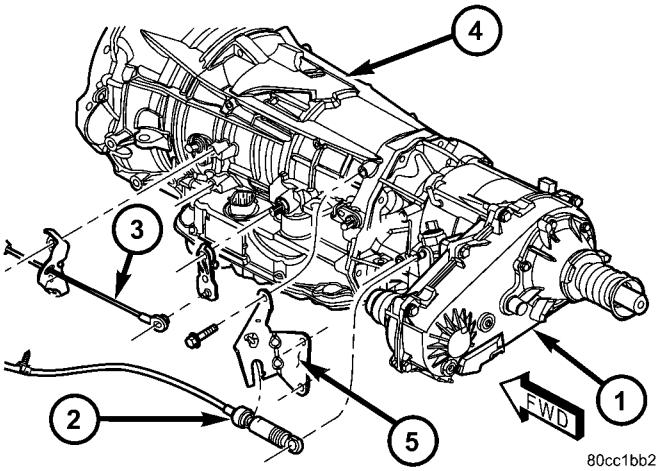

Fig. 77 Remove Shift Cables - Typical

1 - TRANSFER CASE
2 - TRANSFER CASE SHIFT CABLE
3 - TRANSMISSION SHIFT CABLE
4 - AUTOMATIC TRANSMISSION
5 - TRANSFER CASE SHIFT CABLE BRACKET

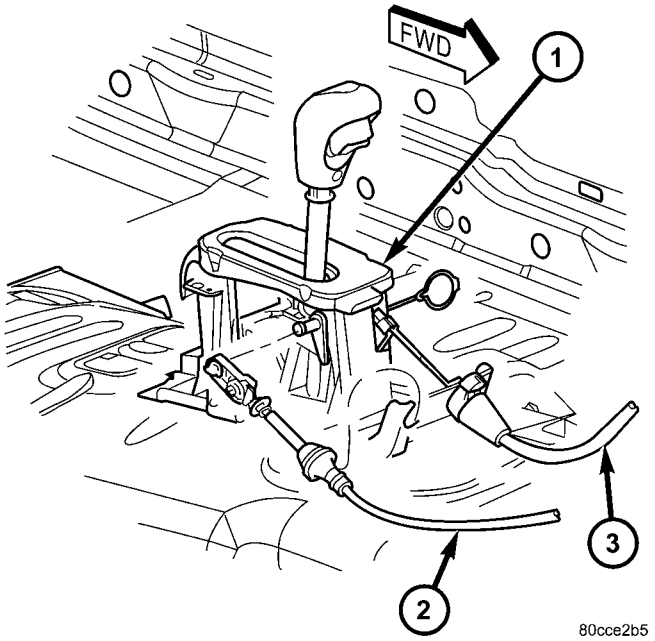

Fig. 78 Transmission Shift Cable At Shifter

1 - SHIFTER ASSEMBLY
2 - GEARSHIFT CABLE
3 - BTSI CABLE

(10) Remove shift cable from vehicle.

INSTALLATION

(1) Route cable through hole in floor pan.

(2) Install seal plate to studs in floor pan (Fig. 80).

(3) Install nuts to hold seal plate to floor pan. Tighten nuts to 7 N·m (65 in.lbs.).

GEARSHIFT CABLE (Continued)

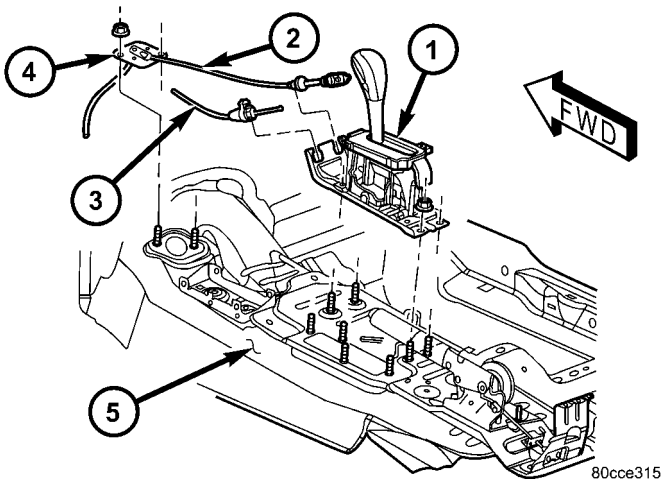

Fig. 79 Transmission Shifter Assembly

1 - SHIFTER ASSEMBLY
2 - GEARSHIFT CABLE
3 - PARK-INTERLOCK CABLE
4 - SHIFT CABLE SEAL PLATE
5 - FLOOR PAN

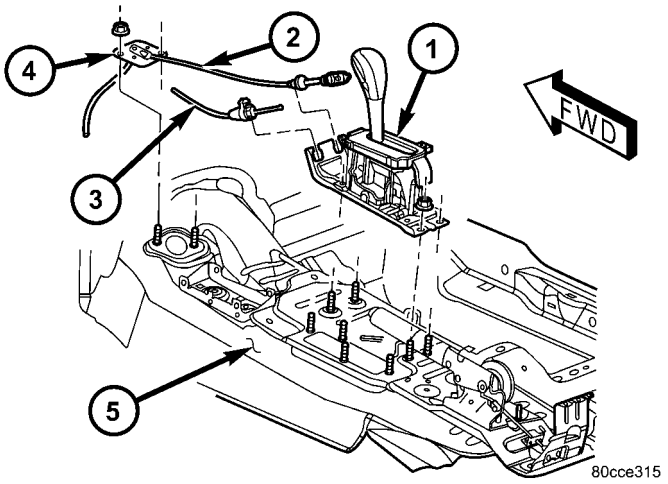

Fig. 80 Transmission Shifter Assembly

1 - SHIFTER ASSEMBLY
2 - GEARSHIFT CABLE
3 - PARK-INTERLOCK CABLE
4 - SHIFT CABLE SEAL PLATE
5 - FLOOR PAN

(4) Install the shift cable to the shifter assembly bracket (Fig. 81). Push cable into the bracket until secure.

(5) Place the floor shifter lever in PARK position.

(6) Loosen the adjustment screw on the shift cable.

(7) Snap the shift cable onto the shift lever pin.

(8) Raise the vehicle.

(9) Install the shift cable to the shift cable support bracket (Fig. 82).

(10) Shift the transmission into PARK. PARK is the rearmost detent position on the transmission manual shift lever.

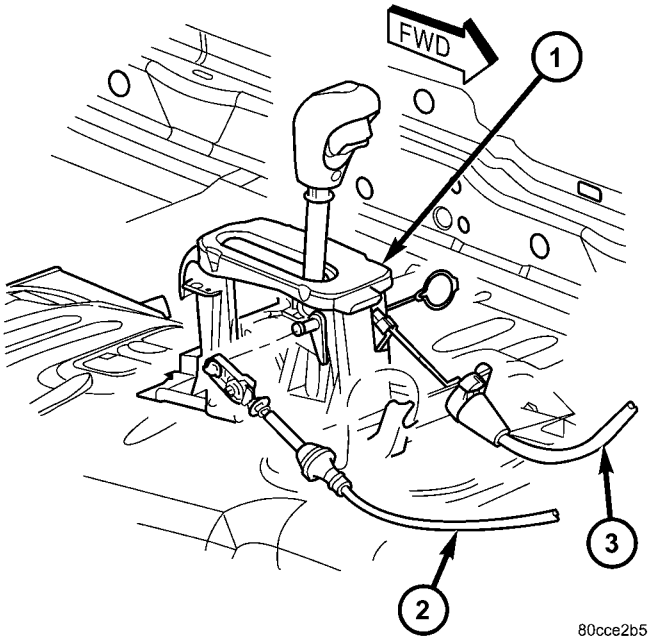

Fig. 81 Transmission Shift Cable At Shifter

1 - SHIFTER ASSEMBLY
2 - GEARSHIFT CABLE
3 - BTSI CABLE

(11) Snap the shift cable onto the transmission manual shift lever.

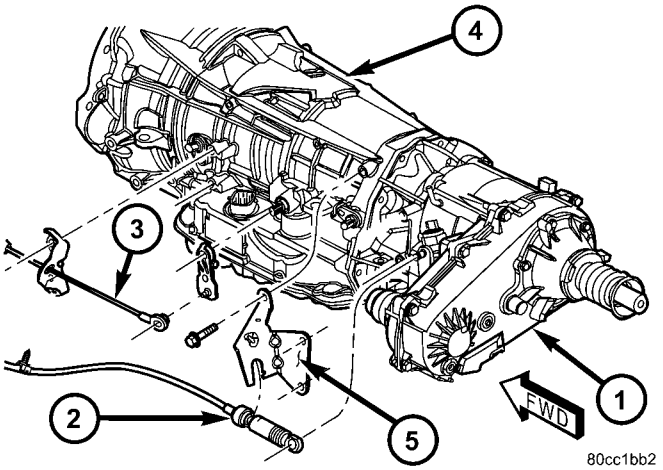

Fig. 82 Install Shift Cable - Typical

1 - TRANSFER CASE
2 - TRANSFER CASE SHIFT CABLE
3 - TRANSMISSION SHIFT CABLE
4 - AUTOMATIC TRANSMISSION
5 - TRANSFER CASE SHIFT CABLE BRACKET

(12) Lower vehicle.

(13) Verify that the shift lever is in the PARK position.

(14) Tighten the adjustment screw to 7 N·m (65 in.lbs.).

GEARSHIFT CABLE (Continued)

(15) Verify correct shifter operation.

(16) Install any console parts removed for access to shift lever assembly and shift cable. (Refer to 23 - BODY/INTERIOR/FLOOR CONSOLE - INSTALLATION)

ADJUSTMENTS - GEARSHIFT CABLE

Check adjustment by starting the engine in PARK and NEUTRAL. Adjustment is CORRECT if the engine starts only in these positions. Adjustment is INCORRECT if the engine starts in one but not both positions. If the engine starts in any position other than PARK or NEUTRAL, or if the engine will not start at all, the TRS may be faulty.

Gearshift Adjustment Procedure

(1) Shift transmission into PARK.

(2) Remove floor console as necessary for access to the shift cable adjustment. (Refer to 23 - BODY/INTERIOR/FLOOR CONSOLE - REMOVAL)

(3) Loosen the shift cable adjustment screw (Fig. 83).

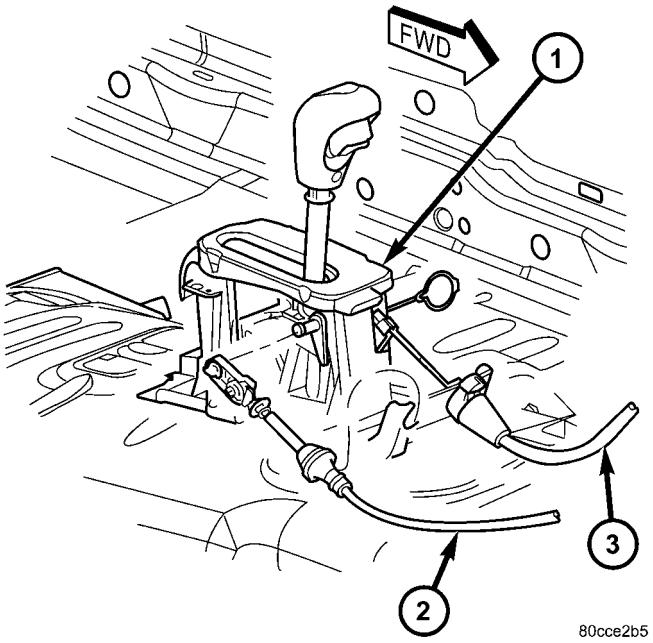

Fig. 83 Transmission Shift Cable At Shifter

1 - SHIFTER ASSEMBLY
2 - GEARSHIFT CABLE
3 - BTSI CABLE

(4) Raise vehicle.

(5) Unsnap cable eyelet from transmission shift lever.

(6) Verify transmission shift lever is in PARK detent by moving lever fully rearward. Last rearward detent is PARK position.

(7) Verify positive engagement of transmission park lock by attempting to rotate propeller shaft. Shaft will not rotate when park lock is engaged.

(8) Snap cable eyelet onto transmission shift lever.

(9) Lower vehicle

(10) Tighten the shift cable adjustment screw to 7 N·m (65 in.lbs.).

(11) Verify correct operation.

(12) Install any floor console components removed for access. (Refer to 23 - BODY/INTERIOR/FLOOR CONSOLE - INSTALLATION)

HOLDING CLUTCHES

DESCRIPTION

Three hydraulically applied multi-disc clutches are used to hold some planetary geartrain components stationary while the input clutches drive others. The 2C, 4C, and Low/Reverse clutches are considered holding clutches. The 2C and 4C clutches are located in the 4C retainer/bulkhead (13). (Fig. 84)

The Low/Reverse clutch is located at the rear of the transmission case. (Fig. 85)

OPERATION

2C CLUTCH

The 2C clutch is hydraulically applied in second and fifth gear by pressurized fluid against the 2C piston. When the 2C clutch is applied, the reverse sun gear assembly is held or grounded to the transmission case by holding the reaction planetary carrier.

4C CLUTCH

The 4C clutch is hydraulically applied in second prime and fourth gear by pressurized fluid against the 4C clutch piston. When the 4C clutch is applied, the reaction annulus gear is held or grounded to the transmission case.

HOLDING CLUTCHES (Continued)

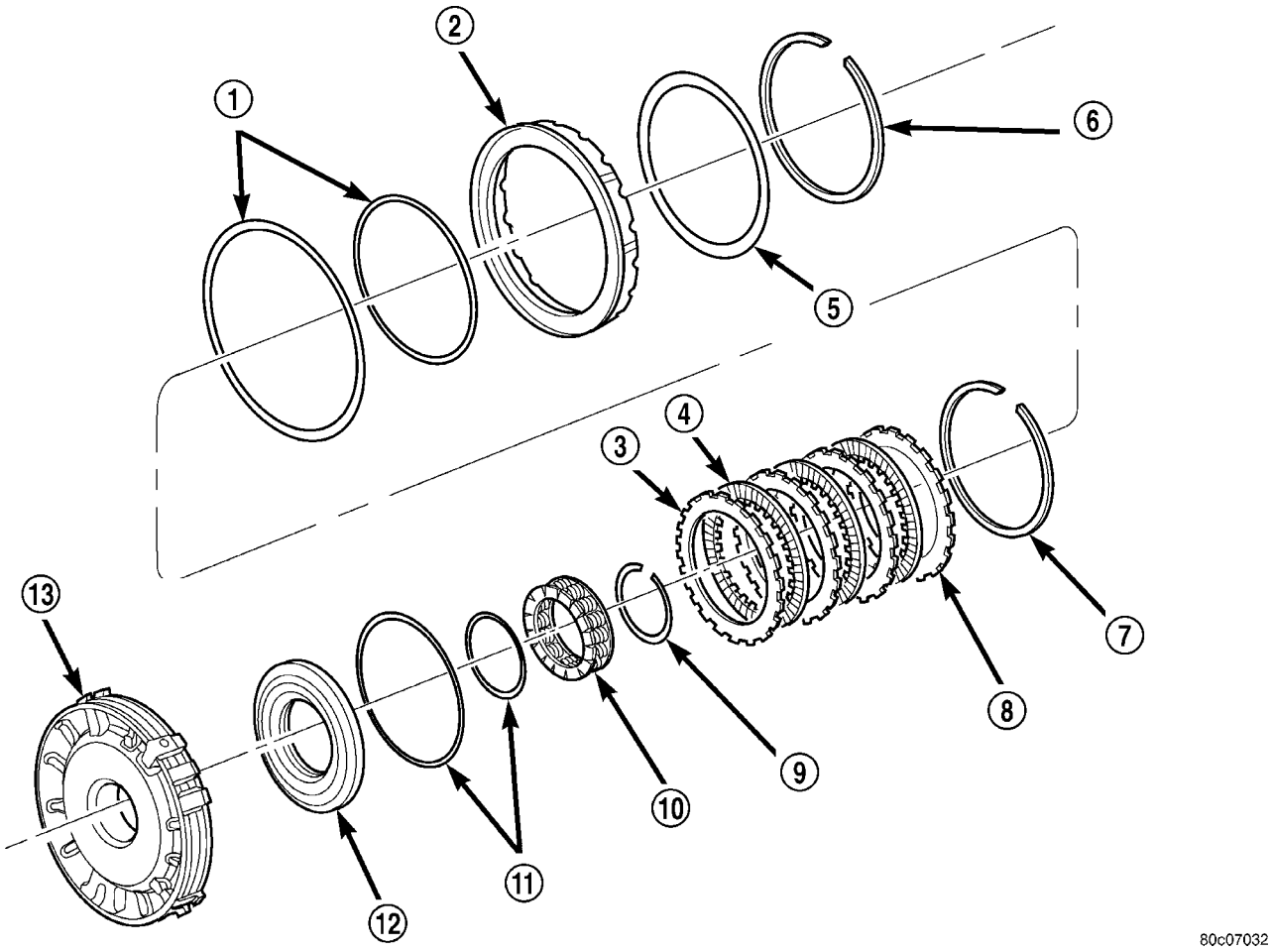

Fig. 84 2C and 4C Clutches

1 - SEAL
2 - 2C PISTON
3 - PLATE
4 - DISC
5 - 2C BELLEVILLE SPRING
6 - SNAP-RING
7 - SNAP-RING (SELECT)
8 - REACTION PLATE
9 - SNAP-RING
10 - RETURN SPRING
11 - SEAL
12 - 4C PISTON
13 - 4C RETAINER/BULKHEAD

LOW/REVERSE CLUTCH

The Low/Reverse clutch is hydraulically applied in park, reverse, neutral, and first gear, only at low speeds, by pressurized fluid against the Low/Reverse clutch piston. When the Low/Reverse clutch is applied, the input annulus assembly is held or grounded to the transmission case.

HOLDING CLUTCHES (Continued)

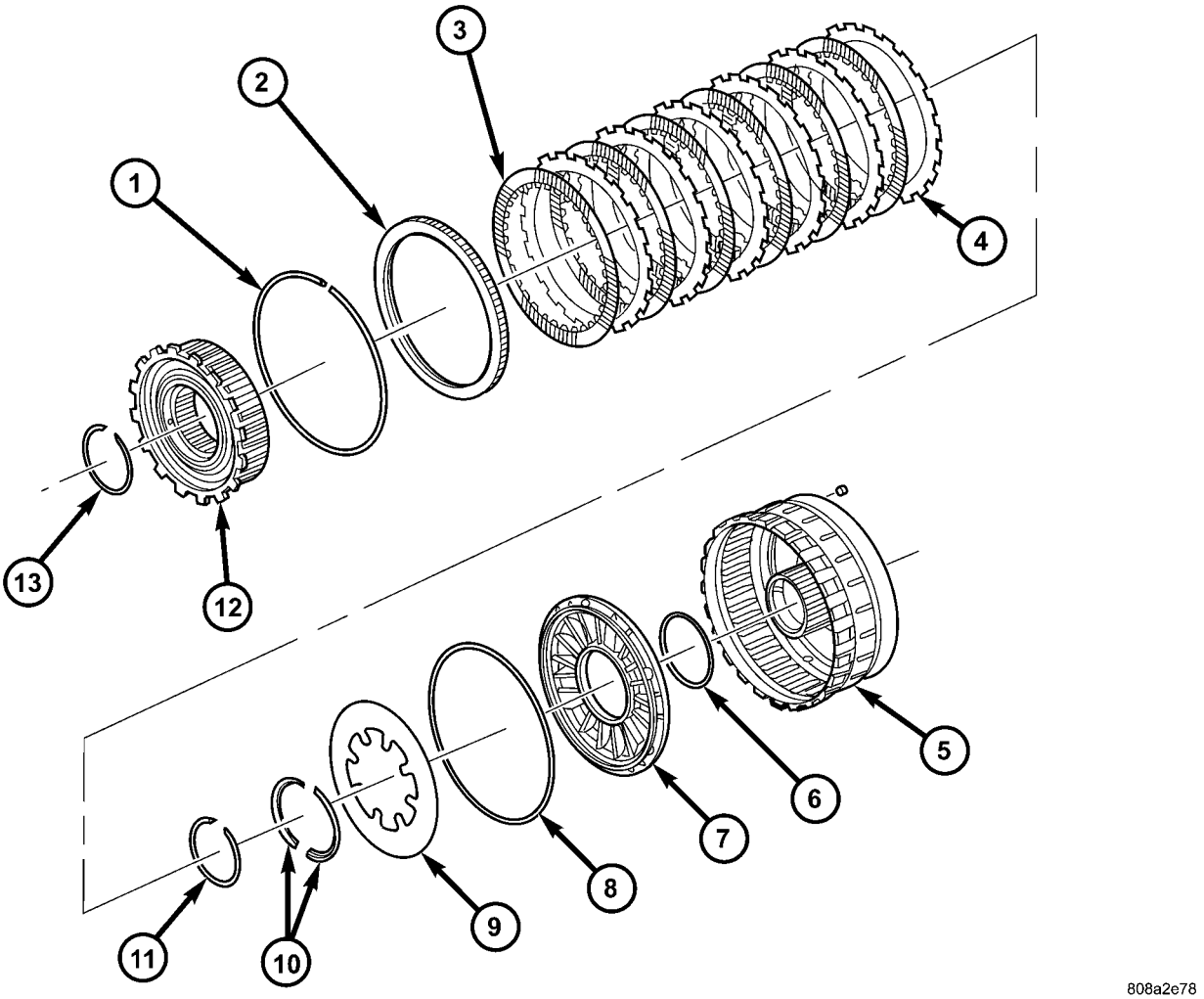

Fig. 85 Low/Reverse Clutch

1 - SNAP-RING (SELECT)
2 - REACTION PLATE
3 - DISC
4 - PLATE
5 - L/R CLUTCH RETAINER
6 - SEAL
7 - PISTON
8 - SEAL
9 - BELLEVILLE SPRING
10 - RETAINER
11 - SNAP-RING
12 - OVERRUNNING CLUTCH
13 - SNAP-RING

INPUT CLUTCH ASSEMBLY

DESCRIPTION

Three hydraulically applied input clutches are used to drive planetary components. The underdrive, overdrive, and reverse clutches are considered input clutches and are contained within the input clutch assembly. (Fig. 86) (Fig. 87)

The input clutch assembly also contains:

- Input shaft
- Input hub
- Clutch retainer
- Underdrive piston
- Overdrive/reverse piston
- Overdrive hub
- Underdrive hub

OPERATION

The three input clutches are responsible for driving different components of the planetary geartrain.

UNDERDRIVE CLUTCH

The underdrive clutch is hydraulically applied in first, second, second prime, and third (direct) gears by pressurized fluid against the underdrive piston. When the underdrive clutch is applied, the underdrive hub drives the input sun gear.

INPUT CLUTCH ASSEMBLY (Continued)

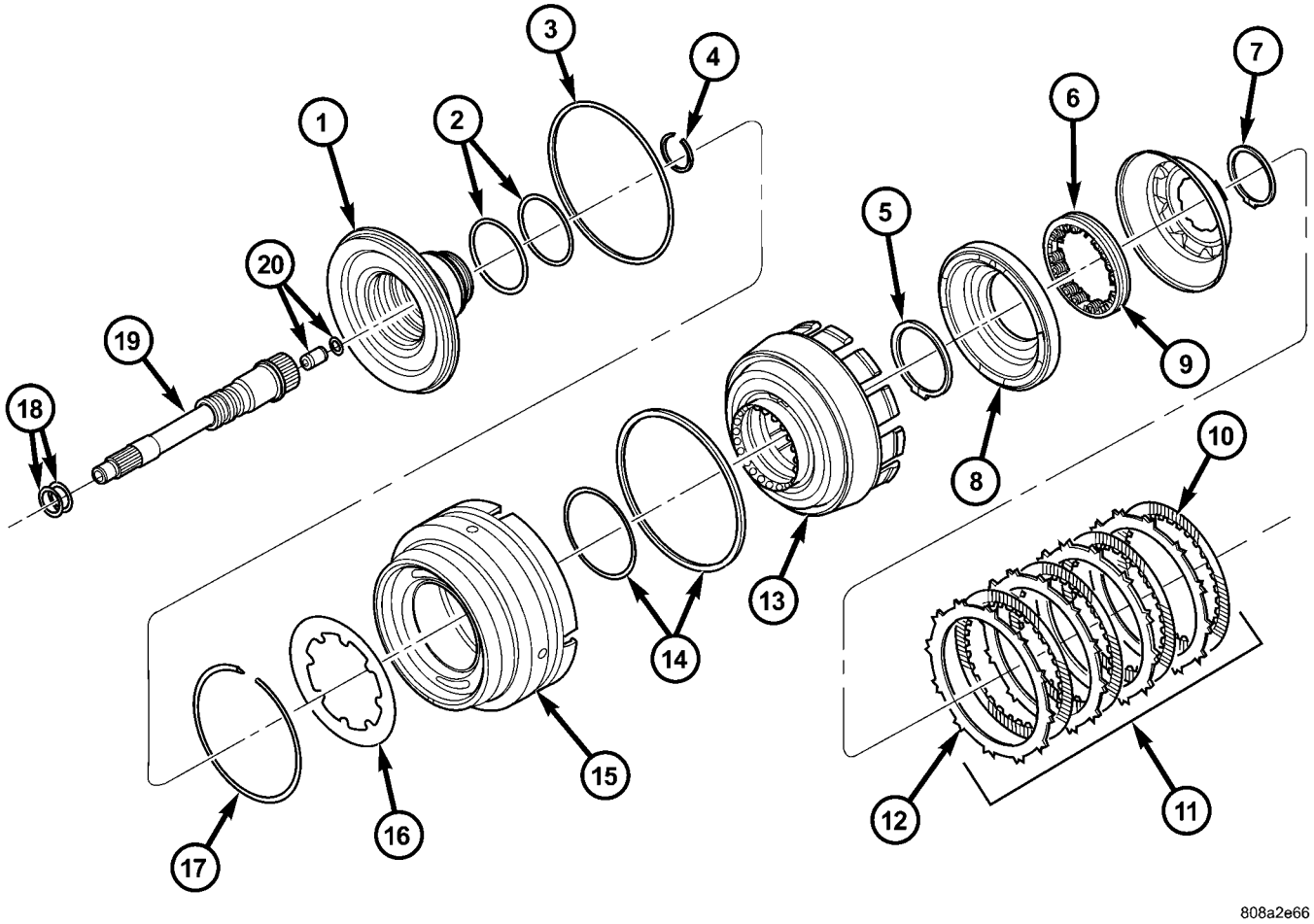

Fig. 86 Input Clutch Assembly - Part 1

1 - INPUT CLUTCH HUB
2 - O-RING SEALS
3 - SEAL
4 - SNAP-RING
5 - SNAP-RING
6 - UD BALANCE PISTON
7 - SNAP-RING
8 - UD PISTON
9 - SPRING
10 - DISC
11 - UD CLUTCH
12 - PLATE
13 - CLUTCH RETAINER
14 - SEAL
15 - OD/REV PISTON
16 - BELLEVILLE SPRING
17 - SNAP-RING
18 - SEAL RINGS
19 - INPUT SHAFT
20 - LUBRICATION CHECK VALVE AND SNAP-RING

OVERDRIVE CLUTCH

The overdrive clutch is hydraulically applied in third (direct), fourth, and fifth gears by pressurized fluid against the overdrive/reverse piston. When the overdrive clutch is applied, the overdrive hub drives the reverse carrier/input annulus assembly.

REVERSE CLUTCH

The reverse clutch is hydraulically applied in reverse gear by pressurized fluid against the overdrive/reverse piston. When the reverse clutch is applied, the reaction annulus gear is driven.

INPUT CLUTCH ASSEMBLY (Continued)

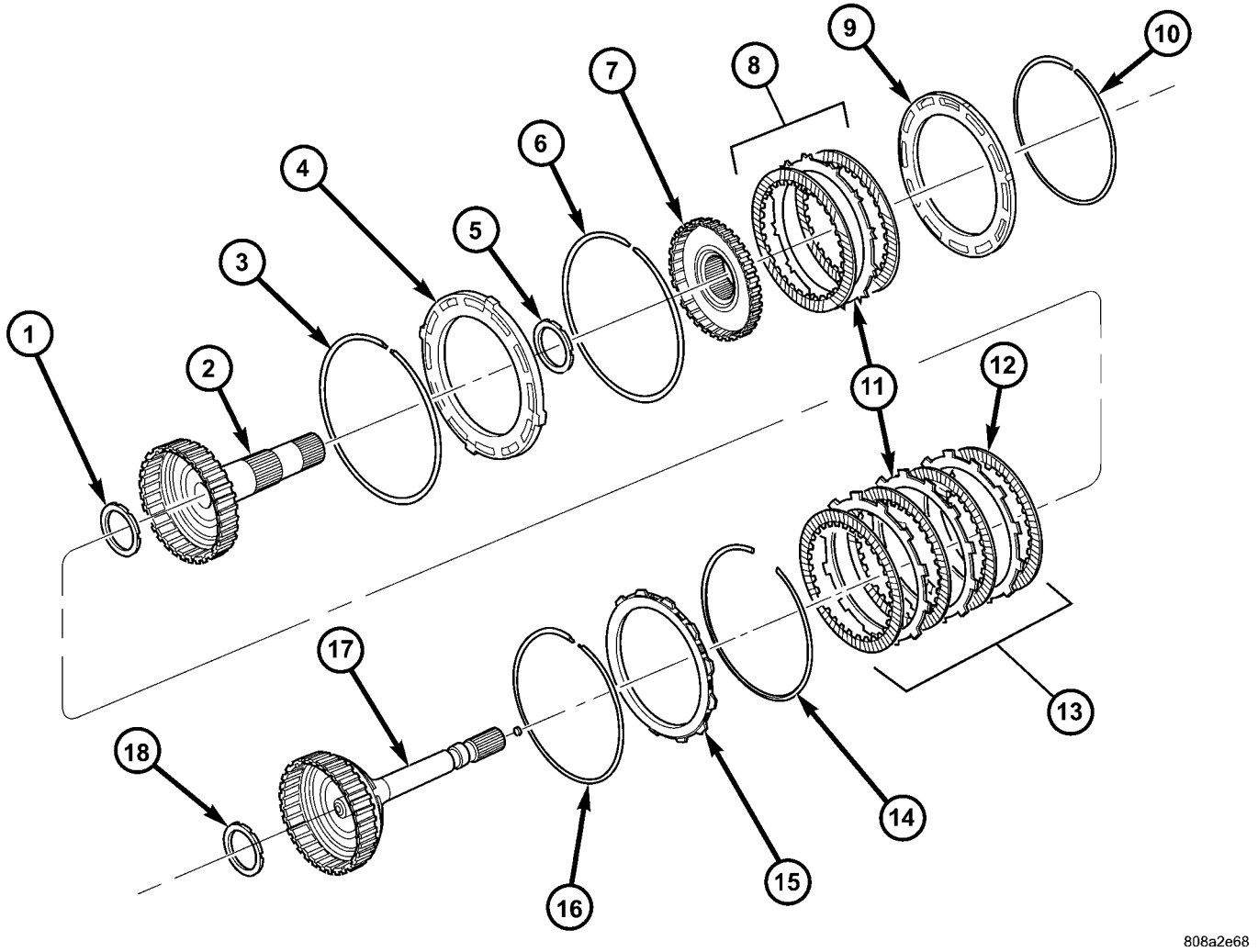

Fig. 87 Input Clutch Assembly - Part 2

1 - THRUST BEARING NUMBER 3
2 - OD HUB/SHAFT
3 - SNAP-RING (WAVE)
4 - REV/OD REACTION PLATE
5 - THRUST BEARING NUMBER 4
6 - SNAP-RING (FLAT)
7 - REVERSE HUB/SHAFT
8 - REVERSE CLUTCH
9 - REVERSE REACTION PLATE
10 - SNAP-RING (SELECT)
11 - PLATE
12 - DISC
13 - OD CLUTCH
14 - SNAP-RING (TAPERED)
15 - UD/OD REACTION PLATE
16 - SNAP-RING (FLAT)
17 - UD HUB/SHAFT
18 - THRUST BEARING NUMBER 2

DISASSEMBLY

(1) Remove the reverse reaction plate selective snap-ring (10) from the input clutch retainer (13). (Fig. 88)

(2) Remove the reverse reaction plate (9) from the input clutch retainer (13).

(3) Remove the reverse hub (7) and reverse clutch pack (8) from the input clutch retainer (13).

(4) Remove the number 4 thrust bearing (5) from the overdrive hub (2).

(5) Remove the overdrive hub (2) from the input clutch retainer (13). (Fig. 88)

(6) Remove the number 3 thrust bearing (1) from the underdrive hub (17).

(7) Remove the OD/reverse reaction plate snap-ring (6) from the input clutch retainer (13).

(8) Remove the underdrive hub (17), overdrive clutch (13), and overdrive reaction plate (15) from the input clutch retainer (13). (Fig. 88)

NOTE: The overdrive friction discs and steel discs are thicker than the matching components in the underdrive and reverse clutches.

INPUT CLUTCH ASSEMBLY (Continued)

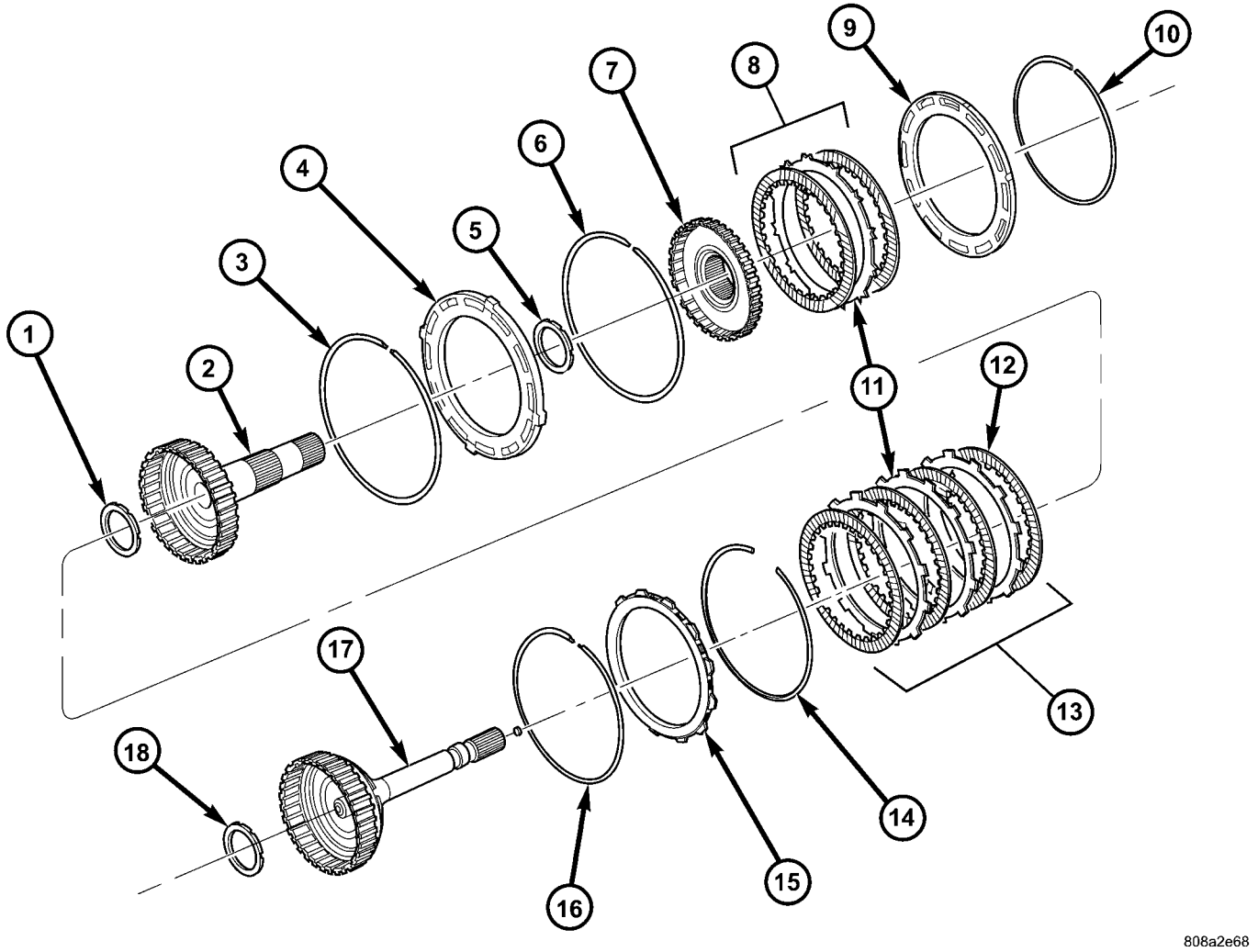

Fig. 88 Input Clutch Assembly - Part 2

1 - THRUST BEARING NUMBER 3
2 - OD HUB/SHAFT
3 - SNAP-RING (WAVE)
4 - REV/OD REACTION PLATE
5 - THRUST BEARING NUMBER 4
6 - SNAP-RING (FLAT)
7 - REVERSE HUB/SHAFT
8 - REVERSE CLUTCH
9 - REVERSE REACTION PLATE
10 - SNAP-RING (SELECT)
11 - PLATE
12 - DISC
13 - OD CLUTCH
14 - SNAP-RING (TAPERED)
15 - UD/OD REACTION PLATE
16 - SNAP-RING (FLAT)
17 - UD HUB/SHAFT
18 - THRUST BEARING NUMBER 2

(9) Remove the number 2 thrust bearing (18) from the input clutch hub (1).

(10) Remove the overdrive clutch wave snap-ring (3) from the input clutch retainer (13).

(11) Remove the UD/OD reaction plate tapered snap-ring (14) from the input clutch retainer (13).

(12) Remove the UD/OD reaction plate (15) from the input clutch retainer (13).

(13) Remove the UD/OD reaction plate flat snap-ring (16) from the input clutch retainer (13). (Fig. 88)

(14) Remove the underdrive clutch pack (11) from the input clutch retainer (13). (Fig. 89)

(15) Using Spring Compressor 8251 (2) , compress the UD/OD balance piston (3) and remove the snap-ring from the input clutch hub (1). (Fig. 90)

(16) Remove the UD/OD balance piston (6) and piston return spring (9) from the input clutch retainer (13). (Fig. 89)

(17) Remove the underdrive piston (8) from the input clutch retainer (13). (Fig. 89)

INPUT CLUTCH ASSEMBLY (Continued)

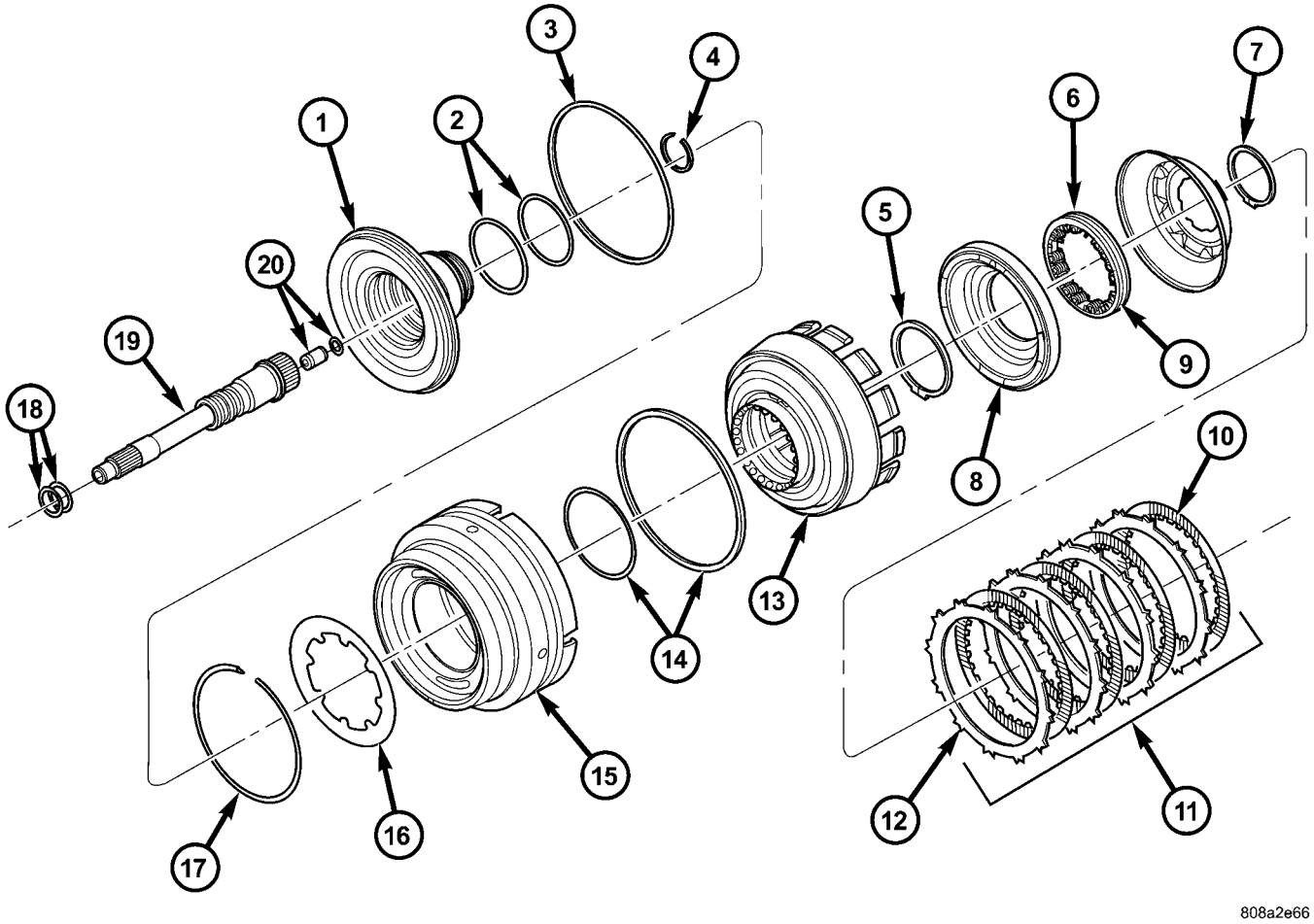

Fig. 89 Input Clutch Assembly - Part 1

1 - INPUT CLUTCH HUB	11 - UD CLUTCH
2 - O-RING SEALS	12 - PLATE
3 - SEAL	13 - CLUTCH RETAINER
4 - SNAP-RING	14 - SEAL
5 - SNAP-RING	15 - OD/REV PISTON
6 - UD BALANCE PISTON	16 - BELLEVILLE SPRING
7 - SNAP-RING	17 - SNAP-RING
8 - UD PISTON	18 - SEAL RINGS
9 - SPRING	19 - INPUT SHAFT
10 - DISC	20 - LUBRICATION CHECK VALVE AND SNAP-RING

NOTE: Both the UD/OD balance piston and the underdrive piston have seals molded onto them. If the seal is damaged, do not attempt to install a new seal onto the piston. The piston/seal must be replaced as an assembly.

(18) Remove the input clutch retainer tapered snap-ring (5).

(19) Separate input clutch retainer (13) from input clutch hub (1).

(20) Separate OD/reverse piston (15) from input clutch hub retainer (13). (Fig. 89)

(21) Remove all seals and o-rings from the input shaft and input hub. The o-rings on the input hub are color coded. Be sure to make note of which o-ring belongs in which location.

INPUT CLUTCH ASSEMBLY (Continued)

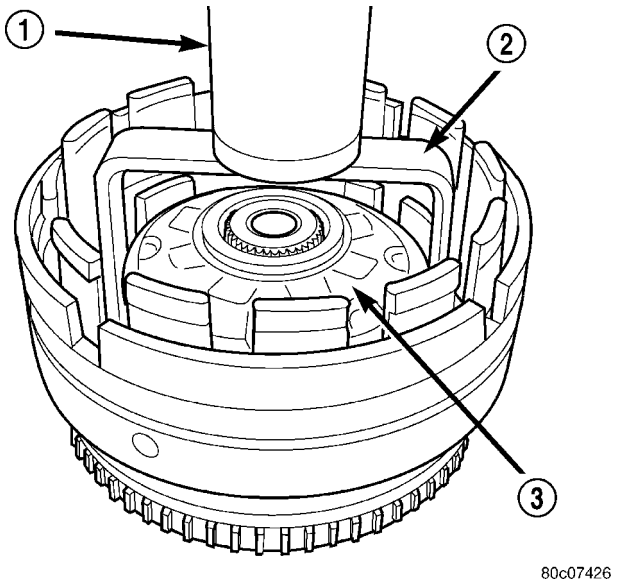

Fig. 90 Compressing UD/OD Balance Piston Using Tool 8251

1 - PRESS
2 - TOOL 8251
3 - BALANCE PISTON

ASSEMBLY

NOTE: Install all new seals and o-rings onto the input shaft and input hub. The o-rings on the input hub are color coded. Be sure to install the correct o-ring in the correct location.

(1) Check the transmission lubrication check valve (20) located in the input shaft using shop air. The valve should only allow air flow in one direction. If the valve allows no air flow, or air flow in both directions, the valve will need to be replaced.

(2) Lubricate all seals with Mopar® ATF +4, Automatic Transmission Fluid, prior to installation.

(3) Assemble the OD/reverse piston (15) onto the input clutch hub (1). (Fig. 91)

(4) Assemble the input clutch retainer (13) onto the input clutch hub (1).

INPUT CLUTCH ASSEMBLY (Continued)

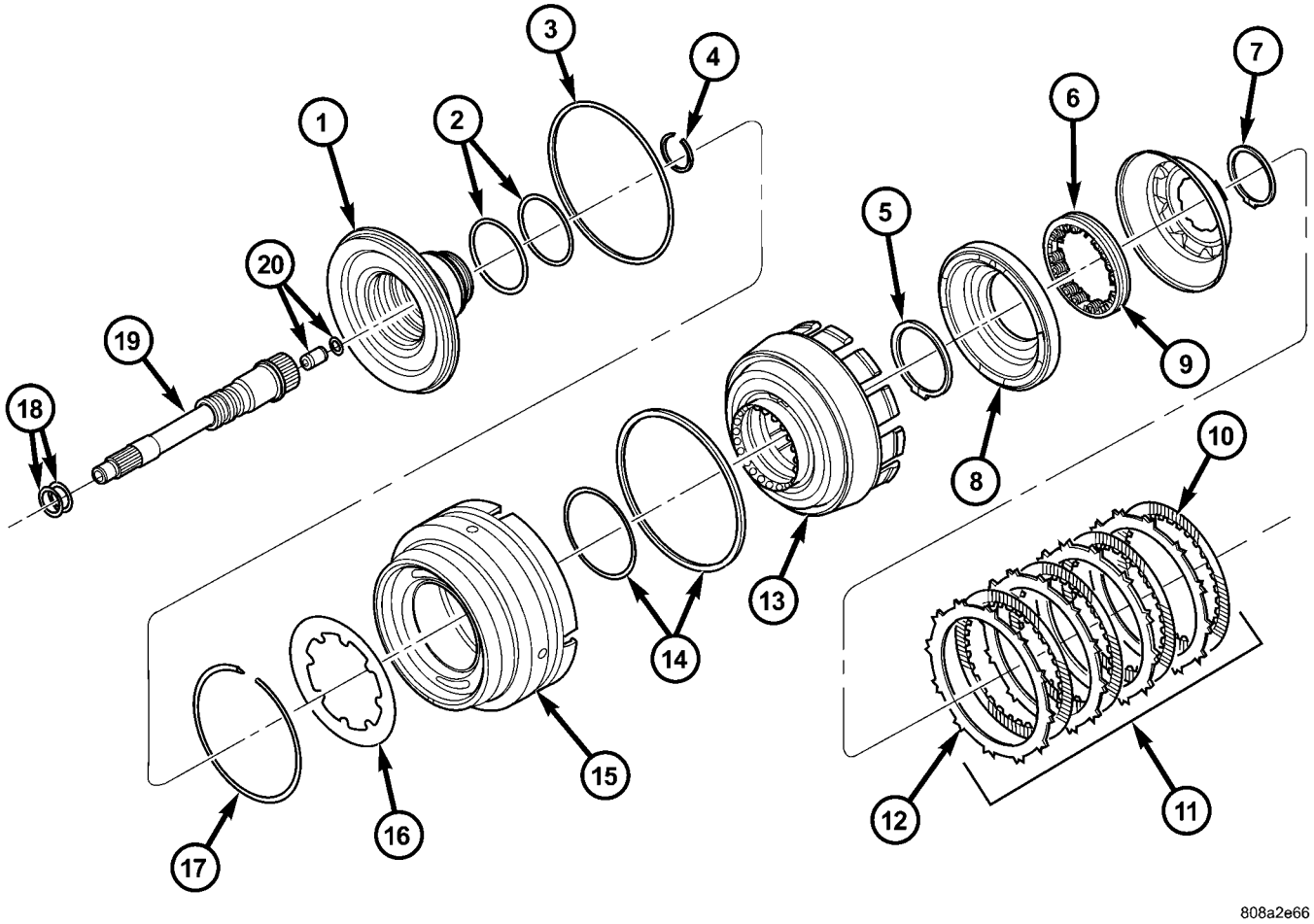

Fig. 91 Input Clutch Assembly - Part 1

1 - INPUT CLUTCH HUB
2 - O-RING SEALS
3 - SEAL
4 - SNAP-RING
5 - SNAP-RING
6 - UD BALANCE PISTON
7 - SNAP-RING
8 - UD PISTON
9 - SPRING
10 - DISC
11 - UD CLUTCH
12 - PLATE
13 - CLUTCH RETAINER
14 - SEAL
15 - OD/REV PISTON
16 - BELLEVILLE SPRING
17 - SNAP-RING
18 - SEAL RINGS
19 - INPUT SHAFT
20 - LUBRICATION CHECK VALVE AND SNAP-RING

INPUT CLUTCH ASSEMBLY (Continued)

(5) Install the input clutch retainer tapered snap-ring (5) with tapered side up onto the input clutch hub (1).

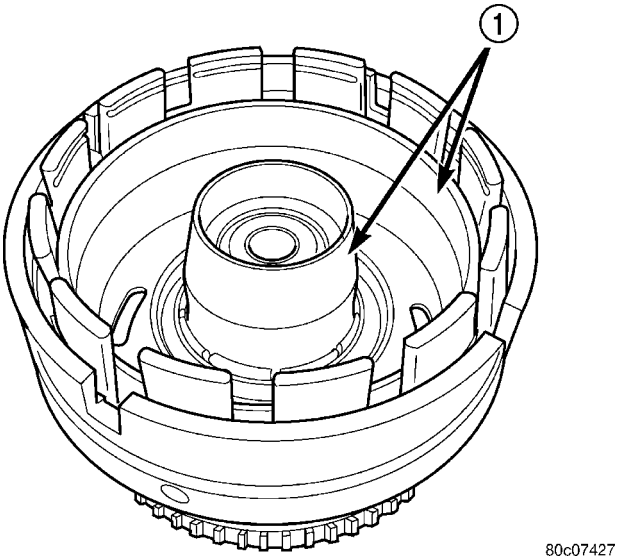

Fig. 92 Install Underdrive Piston Using Tool 8504

1 - TOOL 8504

(6) Install Piston Guides 8504 (1) into the input clutch retainer (13) (Fig. 92) and onto the input clutch hub (1) to guide the inner and outer under-drive piston (8) seals into position.

(7) Install the underdrive piston (8) into the input clutch retainer (13) and over the input clutch hub (1). (Fig. 91)

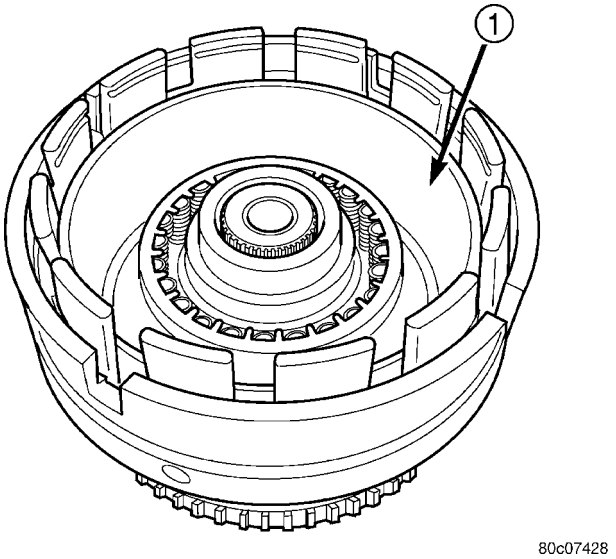

Fig. 93 Install Balance Piston Using Tool 8252

1 - TOOL 8252

(8) Install the UD/OD balance piston return spring pack (9) into the input clutch retainer (13).

(9) Install Piston Guide 8252 (1) into the input clutch retainer (13) (Fig. 93) to guide the UD/OD balance piston (6) seal into position inside the under-drive piston (8).

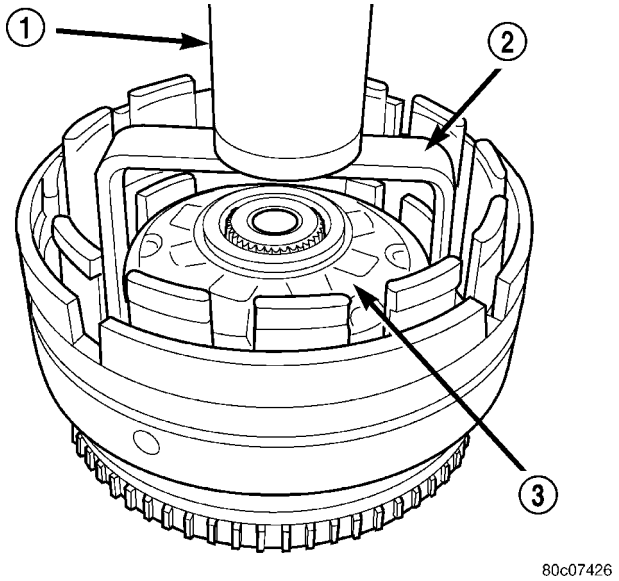

Fig. 94 Compressing UD/OD Balance Piston Using Tool 8251

1 - PRESS
2 - TOOL 8251
3 - BALANCE PISTON

(10) Install the UD/OD balance piston (3) into the input clutch retainer and the underdrive piston.

(11) Using Spring Compressor 8251 (2), compress the UD/OD return spring pack and secure the piston in place with the snap-ring. (Fig. 94)

(12) Install the underdrive clutch pack (11) into the input clutch retainer. (Fig. 91)

(13) Install the UD/OD reaction plate lower flat snap-ring (16) (Fig. 95). The correct snap-ring can be identified by the two tabbed ears.

(14) Install the UD/OD reaction plate (15) into the input clutch retainer. The reaction plate is to be installed with the big step down.

(15) Install the UD/OD reaction plate upper tapered snap-ring (14) with tapered side up.

INPUT CLUTCH ASSEMBLY (Continued)

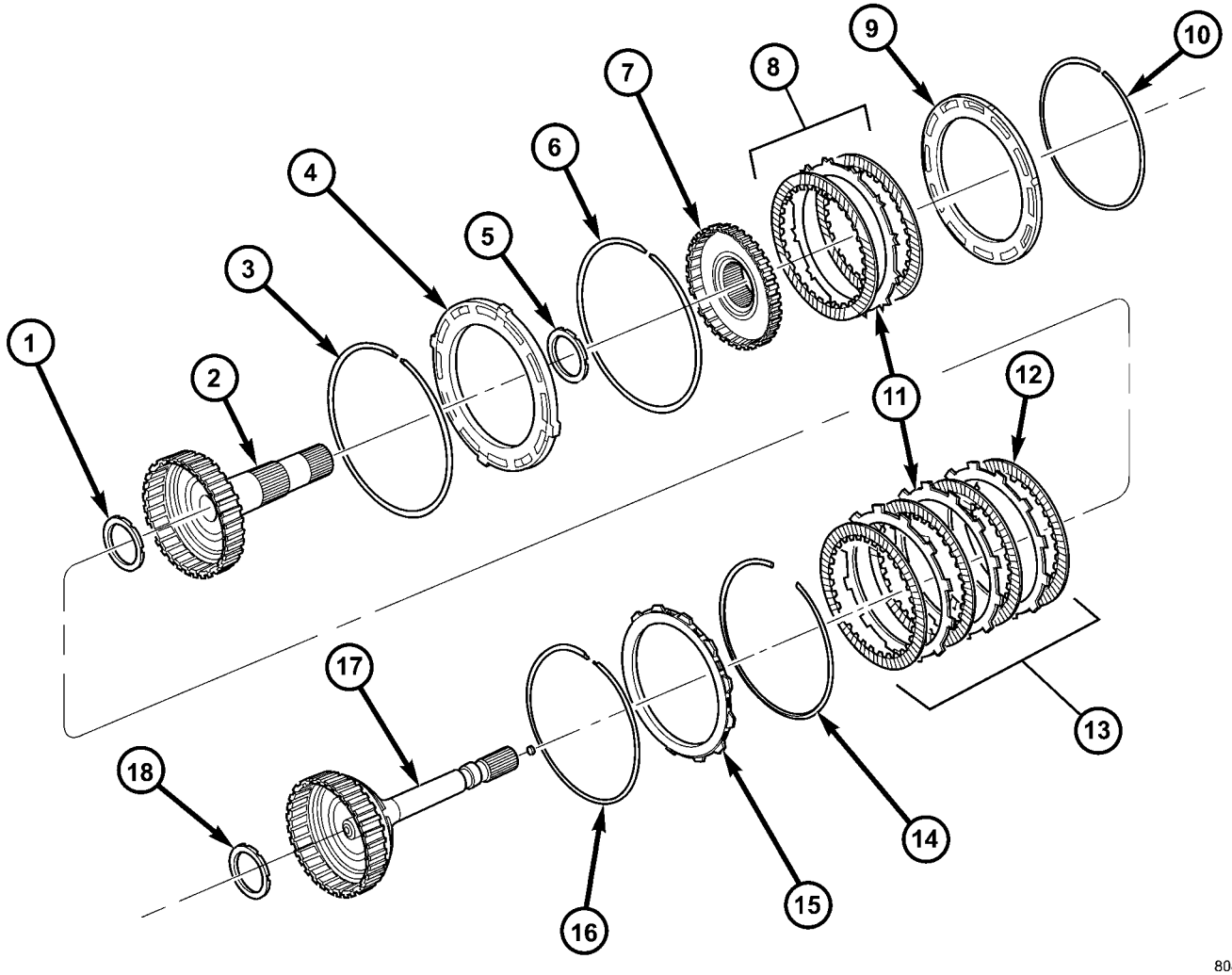

Fig. 95 Input Clutch Assembly - Part 2

1 - THRUST BEARING NUMBER 3
2 - OD HUB/SHAFT
3 - SNAP-RING (WAVE)
4 - REV/OD REACTION PLATE
5 - THRUST BEARING NUMBER 4
6 - SNAP-RING (FLAT)
7 - REVERSE HUB/SHAFT
8 - REVERSE CLUTCH
9 - REVERSE REACTION PLATE
10 - SNAP-RING (SELECT)
11 - PLATE
12 - DISC
13 - OD CLUTCH
14 - SNAP-RING (TAPERED)
15 - UD/OD REACTION PLATE
16 - SNAP-RING (FLAT)
17 - UD HUB/SHAFT
18 - THRUST BEARING NUMBER 2

INPUT CLUTCH ASSEMBLY (Continued)

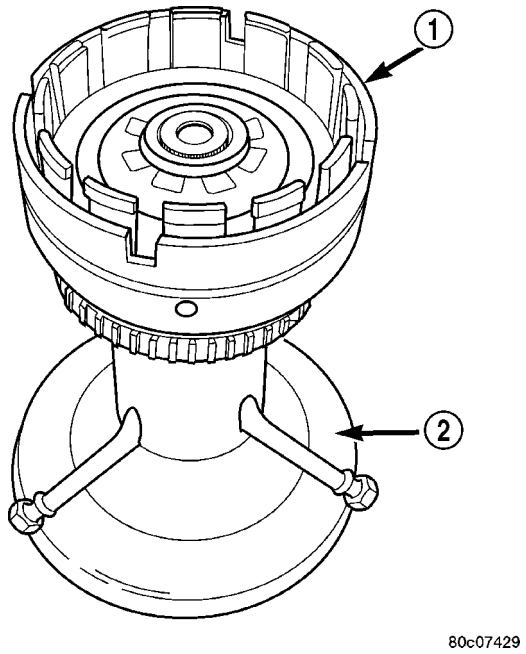

Fig. 96 Input Clutch Assembly Mounted on Tool 8260

1 - INPUT CLUTCH ASSEMBLY
2 - TOOL 8260

(16) Install the input clutch assembly into Input Clutch Pressure Fixture 8260 (2). (Fig. 96)

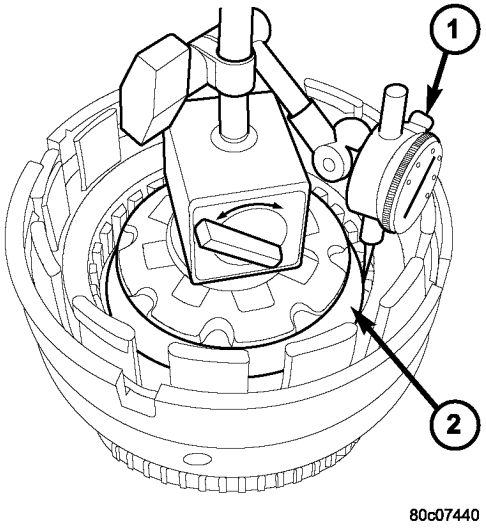

Fig. 97 Measuring UD Clutch Clearance

1 - TOOL C-3339
2 - UNDERDRIVE CLUTCH PACK

(17) Mount a dial indicator to the assembly, push down on the clutch discs and zero the indicator against the underdrive clutch discs (Fig. 97). Apply 20 psi of air pressure to the underdrive clutch and record the dial indicator reading. Measure and record UD clutch pack measurement in four (4) places, 90° apart. Take average of four measurements and compare with UD clutch pack clearance specification. The correct clutch clearance is 0.84-1.54 mm (0.033-0.061 in.). The reaction plate is not selective. If the clutch clearance is not within specification, replace the reaction plate along with all the friction and steel discs.

(18) Install the overdrive clutch pack (13) (Fig. 95) into the input clutch retainer. The overdrive steel separator plates can be identified by the lack of the half-moon cuts in the locating tabs.

(19) Install the overdrive clutch wavy snap-ring (3) (Fig. 95) with the two tabbed ears into the input clutch retainer.

(20) Install the OD/reverse reaction plate (4) (Fig. 95) into the input clutch retainer. The reaction plate is non-directional.

(21) Install the OD/reverse reaction plate flat snap-ring (6) into the input clutch retainer.

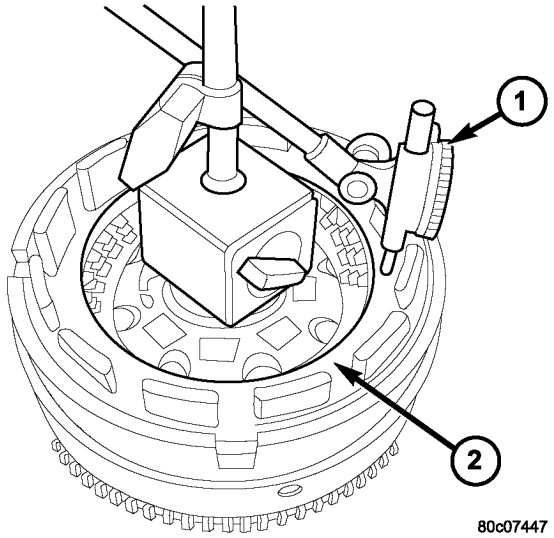

Fig. 98 Measuring OD Clutch Clearance

1 - TOOL C-3339
2 - OD/REV REACTION PLATE

(22) Mount a dial indicator to the assembly and zero the indicator against the OD/reverse reaction plate (2) (Fig. 98). Apply 20 psi of air pressure to the overdrive clutch and record the dial indicator reading. Measure and record OD clutch pack measurement in four (4) places, 90° apart. Take average of four measurements and compare with OD clutch pack clearance specification.Verify that the clutch clearance is 1.103-1.856 mm (0.043-0.073 in.). The reaction plate is not selective. If the clutch clearance is not within specification, replace the reaction plate along with all the friction and steel discs.

INPUT CLUTCH ASSEMBLY (Continued)

(23) Install the reverse clutch pack (8) into the input clutch retainer. (Fig. 95)

(24) Install the reverse reaction plate(9) into the input clutch retainer.

(25) Install the reverse reaction plate selective snap-ring (10) into the input clutch retainer.

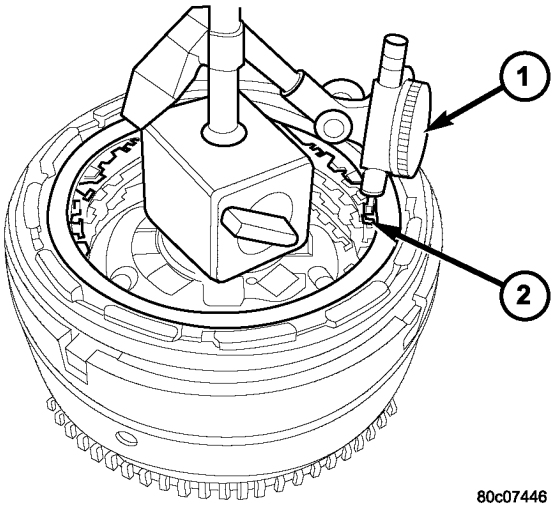

Fig. 99 Measuring Reverse Clutch Clearance

1 - TOOL C-3339
2 - REVERSE CLUTCH PACK

(26) Mount a dial indicator to the assembly, push down on the clutch discs, pull up on the reaction plate to ensure the plate is properly seated and zero the indicator against the reverse clutch discs (2) (Fig. 99). Apply 20 psi of air pressure to the reverse clutch and record the dial indicator reading. Measure and record Reverse clutch pack measurement in four (4) places, 90° apart. Take average of four measurements and compare with Reverse clutch pack clearance specification. The correct clutch clearance is 0.58-1.47 mm (0.023-0.058 in.). Adjust as necessary. Install the chosen snap-ring and re-measure to verify selection.

(27) Remove the reverse clutch pack (8) from the input clutch retainer.

(28) Install the number 2 thrust bearing (18) onto the underdrive hub (17) with outer race against the hub with petroleum jelly.

(29) Install the underdrive hub (17) into the input clutch retainer.

(30) Install the number 3 thrust bearing (1) into the overdrive hub (2) with the outer race against the hub with petroleum jelly.

(31) Install the overdrive hub (2) into the input clutch retainer.

(32) Install the number 4 thrust bearing (5) into the reverse hub with outer race against the hub with petroleum jelly.

(33) Install the reverse hub (7) into the input clutch retainer.

(34) Install the complete reverse clutch pack (8).

(35) Install the reverse reaction plate (9) and snap-ring (10).

(36) Push up on reaction plate to allow reverse clutch to move freely.

INPUT SPEED SENSOR

DESCRIPTION

The Input and Output Speed Sensors are two-wire magnetic pickup devices that generate AC signals as rotation occurs. They are mounted in the left side of the transmission case and are considered primary inputs to the Transmission Control Module (TCM).

OPERATION

The Input Speed Sensor provides information on how fast the input shaft is rotating. As the teeth of the input clutch hub pass by the sensor coil, an AC voltage is generated and sent to the TCM. The TCM interprets this information as input shaft rpm.

The Output Speed Sensor generates an AC signal in a similar fashion, though its coil is excited by rotation of the rear planetary carrier lugs. The TCM interprets this information as output shaft rpm.

The TCM compares the input and output speed signals to determine the following:

- Transmission gear ratio
- Speed ratio error detection
- CVI calculation

The TCM also compares the input speed signal and the engine speed signal to determine the following:

- Torque converter clutch slippage
- Torque converter element speed ratio

INPUT SPEED SENSOR (Continued)

REMOVAL

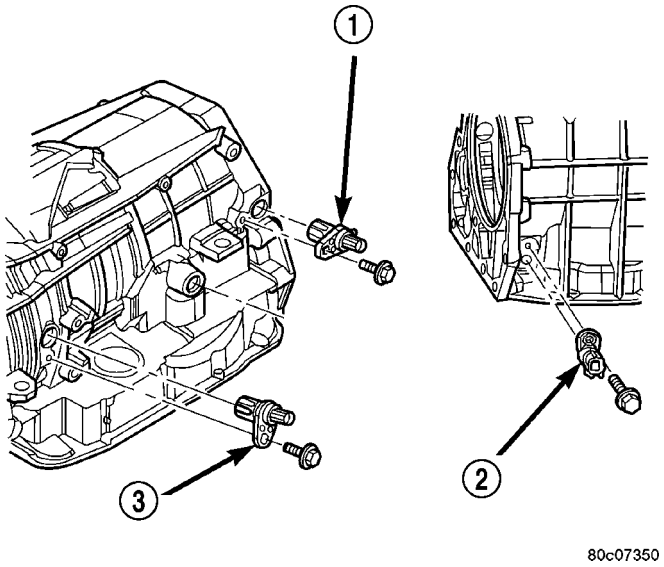

Fig. 100 Input Speed Sensor

1 - OUTPUT SPEED SENSOR
2 - LINE PRESSURE SENSOR
3 - INPUT SPEED SENSOR

(1) Raise vehicle.

(2) Place a suitable fluid catch pan under the transmission.

(3) Remove the wiring connector from the input speed sensor (3). (Fig. 100)

(4) Remove the bolt holding the input speed sensor to the transmission case.

(5) Remove the input speed sensor (3) from the transmission case.

INSTALLATION

(1) Install the input speed sensor (3) (Fig. 101) into the transmission case.

(2) Install the bolt to hold the input speed sensor (3) into the transmission case. Tighten the bolt to 11.9 N·m (105 in.lbs.).

(3) Install the wiring connector onto the input speed sensor.

(4) Verify the transmission fluid level. Add fluid as necessary.

(5) Lower vehicle.

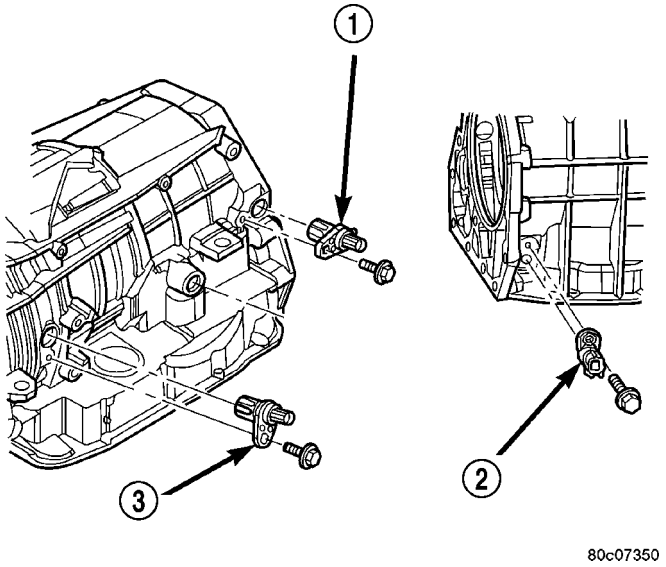

Fig. 101 Input Speed Sensor

1 - OUTPUT SPEED SENSOR
2 - LINE PRESSURE SENSOR
3 - INPUT SPEED SENSOR

LINE PRESSURE (LP) SENSOR

DESCRIPTION

The TCM utilizes a closed-loop system to control transmission line pressure. The system contains a variable force style solenoid, the Pressure Control Solenoid, mounted on the side of the solenoid and pressure switch assembly. The solenoid is duty cycle controlled by the TCM to vent the unnecessary line pressure supplied by the oil pump back to the sump. The system also contains a variable pressure style sensor, the Line Pressure Sensor, which is a direct input to the TCM. The line pressure solenoid monitors the transmission line pressure and completes the feedback loop to the TCM. The TCM uses this information to adjust its control of the pressure control solenoid to achieve the desired line pressure.

LINE PRESSURE (LP) SENSOR (Continued)

OPERATION

The TCM calculates the desired line pressure based upon inputs from the transmission and engine. The TCM calculates the torque input to the transmission and uses that information as the primary input to the calculation. The line pressure is set to a predetermined value during shifts and when the transmission is in the PARK and NEUTRAL positions. This is done to ensure consistent shift quality. During all other operation, the actual line pressure is compared to the desired line pressure and adjustments are made to the pressure control solenoid duty cycle.

REMOVAL

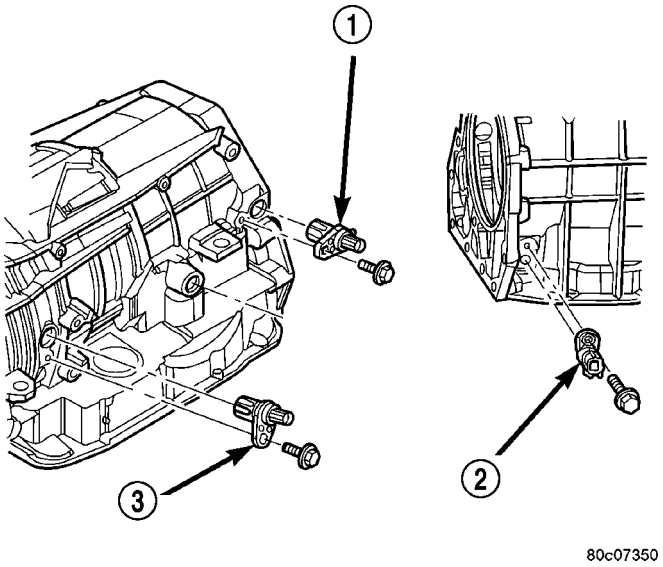

Fig. 102 Line Pressure Sensor

1 - OUTPUT SPEED SENSOR
2 - LINE PRESSURE SENSOR
3 - INPUT SPEED SENSOR

(1) Raise vehicle.

(2) Place a suitable fluid catch pan under the transmission.

(3) Remove the wiring connector from the line pressure sensor (2). (Fig. 102)

(4) Remove the bolt holding the line pressure sensor (2) to the transmission case.

(5) Remove the line pressure sensor (2) from the transmission case.

INSTALLATION

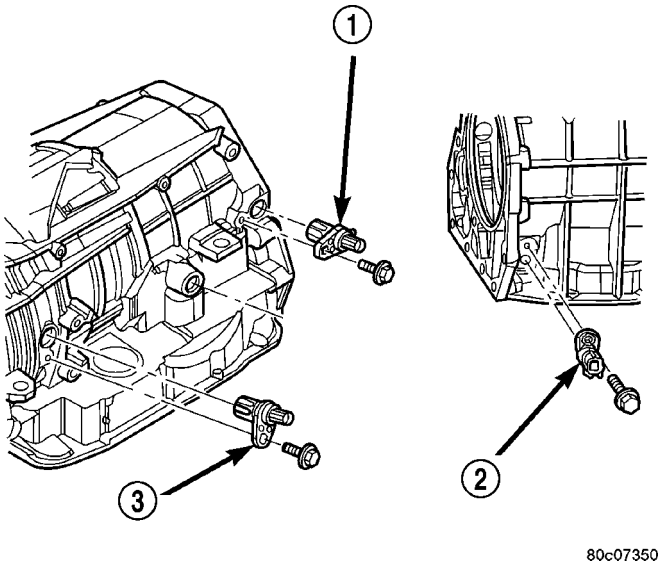

Fig. 103 Line Pressure Sensor

1 - OUTPUT SPEED SENSOR
2 - LINE PRESSURE SENSOR
3 - INPUT SPEED SENSOR

(1) Install the line pressure sensor (2) (Fig. 103) into the transmission case.

(2) Install the bolt to hold the line pressure sensor (2) into the transmission case. Tighten the bolt to 11.9 N·m (105 in.lbs.).

(3) Install the wiring connector onto the line pressure sensor (2).

(4) Verify the transmission fluid level. Add fluid as necessary.

(5) Lower vehicle.

LOW/REVERSE CLUTCH

DISASSEMBLY

(1) Remove the inner overrunning clutch snap-ring (13) from the low/reverse clutch retainer (5). (Fig. 104)

(2) Remove the outer low/reverse reaction plate flat snap-ring (1. (Fig. 104)

(3) Remove the low/reverse clutch (3, 4) and the overrunning clutch (12) from the low/reverse clutch retainer (5) as an assembly. (Fig. 104)

(4) Separate the low/reverse clutch (3, 4) from the overrunning clutch (12).

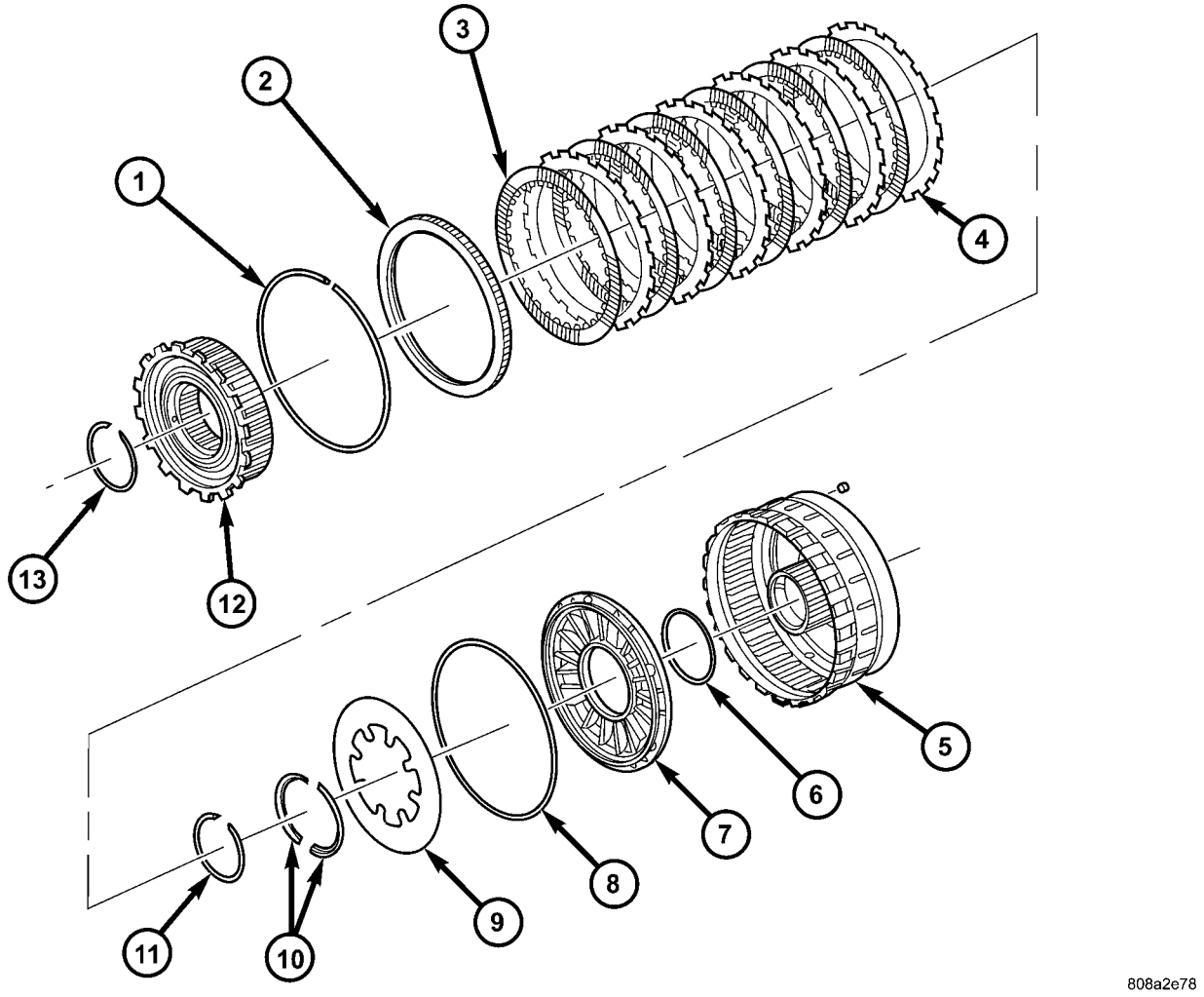

Fig. 104 Low/Reverse Clutch Assembly

1 - SNAP-RING (SELECT)
2 - REACTION PLATE
3 - DISC
4 - PLATE
5 - L/R CLUTCH RETAINER
6 - SEAL
7 - PISTON
8 - SEAL
9 - BELLEVILLE SPRING
10 - RETAINER
11 - SNAP-RING
12 - OVERRUNNING CLUTCH
13 - SNAP-RING

LOW/REVERSE CLUTCH (Continued)

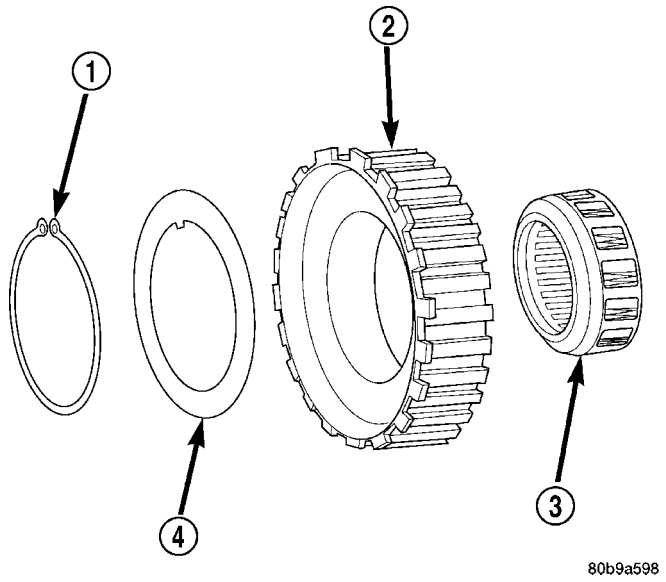

Fig. 105 Overrunning Clutch

1 - SNAP-RING
2 - OUTER RACE
3 - OVERRUNNING CLUTCH
4 - SPACER

(5) Remove the overrunning clutch snap-ring (1). (Fig. 105)

(6) Remove the spacer (4) from the overrunning clutch (3). (Fig. 105)

(7) Separate the inner and outer races (2) of the overrunning clutch (3). (Fig. 105)

(8) Remove the overrunning clutch lower snap-ring. (Fig. 105)

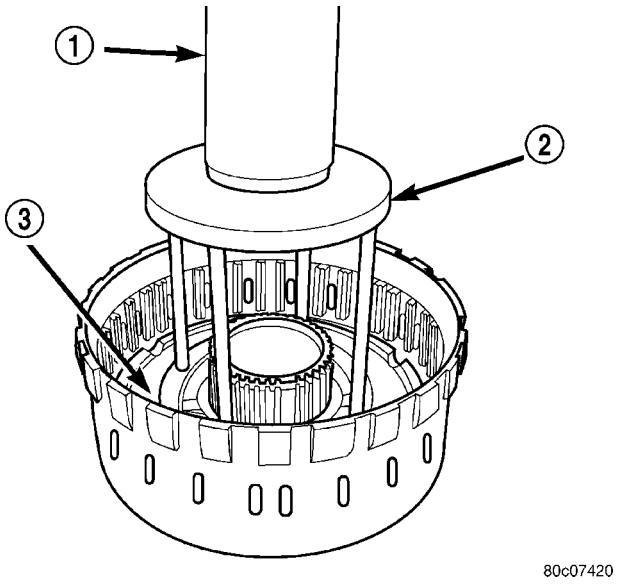

Fig. 106 Compress Low/Reverse Belleville Spring Using Tool 8285

1 - PRESS
2 - TOOL 8285
3 - BELLEVILLE SPRING

(9) Using Spring Compressor 8285 (2) (Fig. 106) and a suitable shop press (1), compress the low/reverse piston Belleville spring (3) and remove the split retaining ring holding the Belleville spring into the low/reverse clutch retainer.

(10) Remove the low/reverse clutch Belleville spring (3) and piston from the low/reverse clutch retainer. Use 20 psi of air pressure to remove the piston if necessary.

CLEANING

Clean the overrunning clutch assembly, clutch cam, and low-reverse clutch retainer. Dry them with compressed air after cleaning.

INSPECTION

Inspect condition of each clutch part after cleaning. Replace the overrunning clutch roller and spring assembly if any rollers or springs are worn or damaged, or if the roller cage is distorted, or damaged. Replace the cam if worn, cracked or damaged.

Replace the low-reverse clutch retainer if the clutch race, roller surface or inside diameter is scored, worn or damaged.

ASSEMBLY

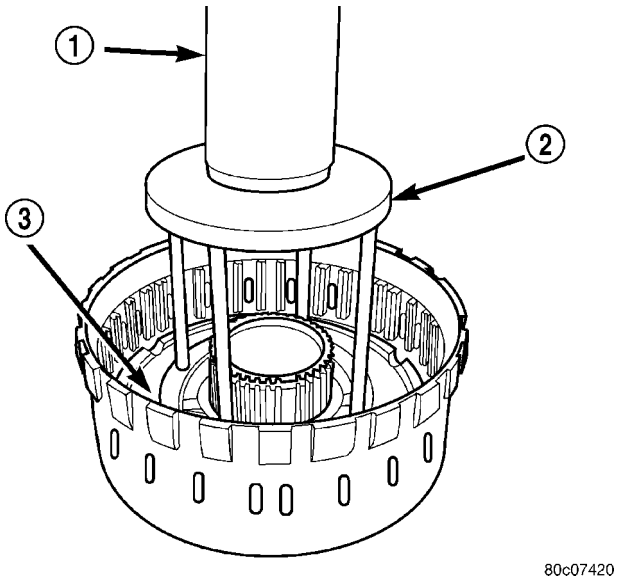

Fig. 107 Compress Low/Reverse Belleville Spring Using Tool 8285

1 - PRESS
2 - TOOL 8285
3 - BELLEVILLE SPRING

(1) Check the bleed orifice to ensure that it is not plugged or restricted.

(2) Install a new seal on the low/reverse piston. Lubricate the seal with Mopar® ATF +4, Automatic Transmission Fluid, prior to installation.

LOW/REVERSE CLUTCH (Continued)

(3) Install the low/reverse piston into the low/reverse clutch retainer.

(4) Position the low/reverse piston Belleville spring (3) on the low/reverse piston.

(5) Using Spring Compressor 8285 (2) and a suitable shop press (1) (Fig. 107), compress the low/reverse piston Belleville spring (3) and install the split retaining ring to hold the Belleville spring into the low/reverse clutch retainer.

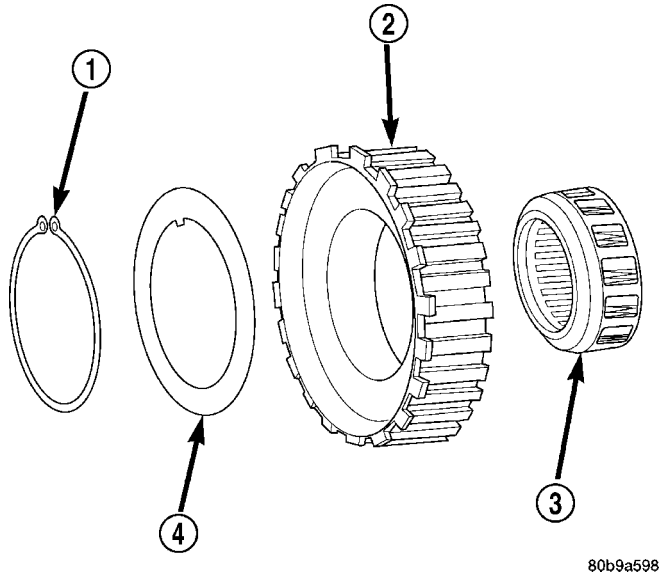

Fig. 108 Overrunning Clutch

1 - SNAP-RING
2 - OUTER RACE
3 - OVERRUNNING CLUTCH
4 - SPACER

(6) Install the lower overrunning clutch snap-ring. (Fig. 108)

(7) Assemble the inner and outer races (2) of the overrunning clutch (3). (Fig. 108)

(8) Position the overrunning clutch spacer (4) on the overrunning clutch (3).

(9) Install the upper overrunning clutch snap-ring (1). (Fig. 108)

(10) Assemble and install the low/reverse clutch pack (3, 4) into the low/reverse clutch retainer (5). (Fig. 109)

(11) Install the low/reverse reaction plate (2) into the low/reverse clutch retainer (5) (Fig. 109). The reaction plate is directional and must be installed with the flat side down.

(12) Install the low/reverse clutch pack snap-ring (1) (Fig. 109). The snap-ring is selectable and should be chosen to give the correct clutch pack clearance.

(13) Measure the low/reverse clutch pack clearance and adjust as necessary. The correct clutch clearance is 1.00-1.74 mm (0.039-0.075 in.).

(14) Install the overrunning clutch (12) into the low/reverse clutch retainer (5) making sure that the index splines are aligned with the retainer.

(15) Install the overrunning clutch inner snap-ring (13).

LOW/REVERSE CLUTCH (Continued)

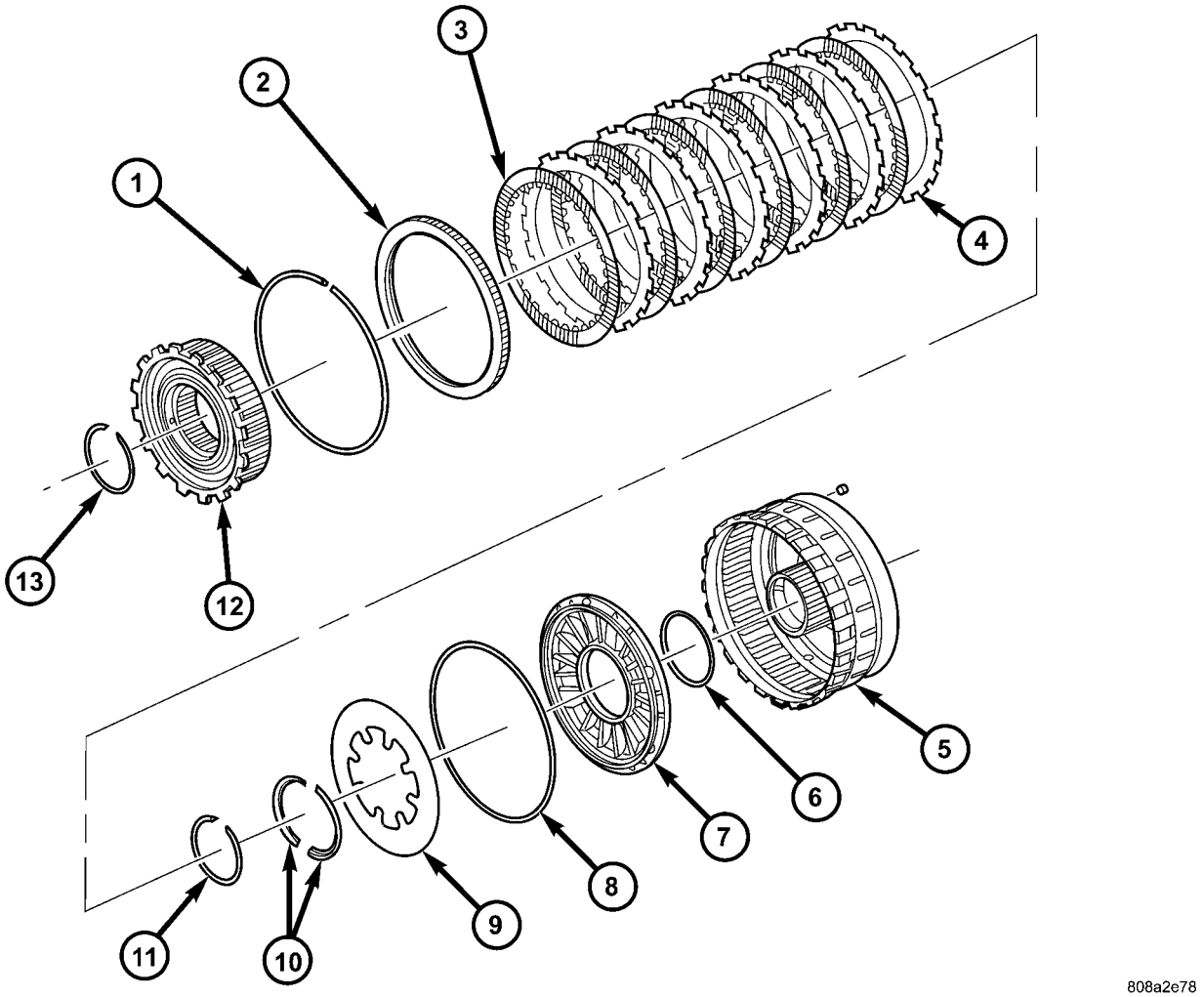

Fig. 109 Low/Reverse Clutch Assembly

1 - SNAP-RING (SELECT)
2 - REACTION PLATE
3 - DISC
4 - PLATE
5 - L/R CLUTCH RETAINER
6 - SEAL
7 - PISTON
8 - SEAL
9 - BELLEVILLE SPRING
10 - RETAINER
11 - SNAP-RING
12 - OVERRUNNING CLUTCH
13 - SNAP-RING

OIL PUMP

DESCRIPTION

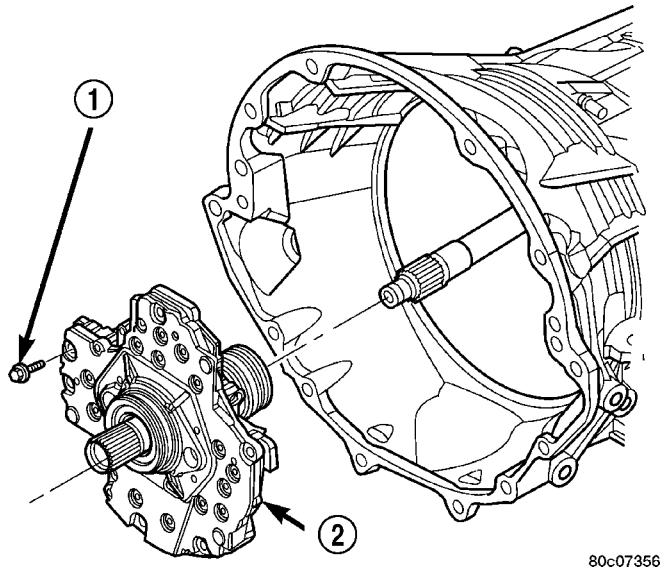

Fig. 110 Oil Pump

1 - OIL PUMP TO CASE BOLT (6)
2 - OIL PUMP

The oil pump (2) (Fig. 110) is located at the front of the transmission inside the bell housing and behind the transmission front cover.

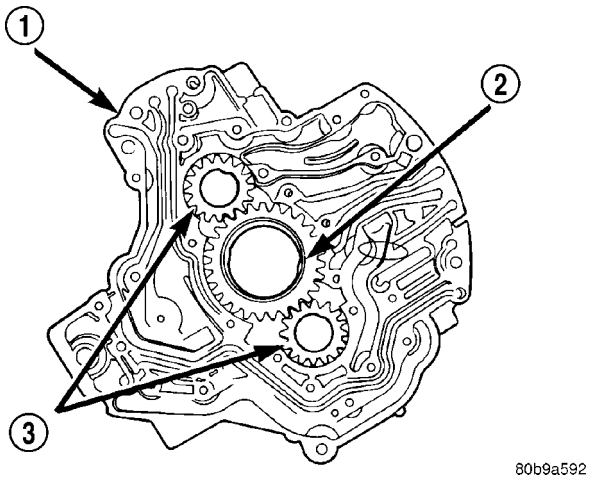

Fig. 111 Oil Pump Gears

1 - PUMP HOUSING
2 - DRIVE GEAR
3 - DRIVEN GEARS

The oil pump consists of two independent pumps. (Fig. 111)

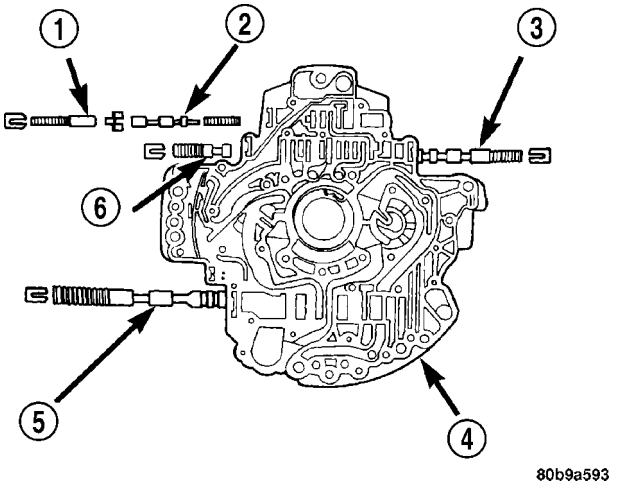

Fig. 112 Oil Pump Valves

1 - TORQUE CONVERTER CLUTCH ACCUMULATOR VALVE
2 - TORQUE CONVERTER CLUTCH CONTROL VALVE
3 - TORQUE CONVERTER CLUTCH SWITCH VALVE
4 - PUMP VALVE BODY
5 - PRESSURE REGULATOR VALVE
6 - TORQUE CONVERTER CLUTCH LIMIT VALVE

The oil pump also contains a number of valves. The converter clutch switch (3) (Fig. 112) and control valves (2), pressure regulator valve (5), and converter pressure limit valve (6) are all located in the oil pump valve body.

A front seal (2) (Fig. 113), and a bolt on reaction shaft (5) complete the oil pump assembly.

OPERATION

As the torque converter rotates, the converter hub rotates the oil pump drive gear. As the drive gear rotates both driven gears, a vacuum is created when the gear teeth come out of mesh. This suction draws fluid through the pump inlet from the oil pan. As the gear teeth come back into mesh, pressurized fluid is forced into the pump outlet and to the oil pump valves.

At low speeds, both sides of the pump supply fluid to the transmission. As the speed of the torque converter increases, the flow from both sides increases until the flow from the primary side alone is sufficient to meet system demands. At this point, the check valve located between the two pumps closes. The secondary side is shut down and the primary side supplies all the fluid to the transmission.

CONVERTER CLUTCH SWITCH VALVE

The converter clutch switch valve is used to control the hydraulic pressure supplied to the front (OFF) side of the torque converter clutch.

OIL PUMP (Continued)

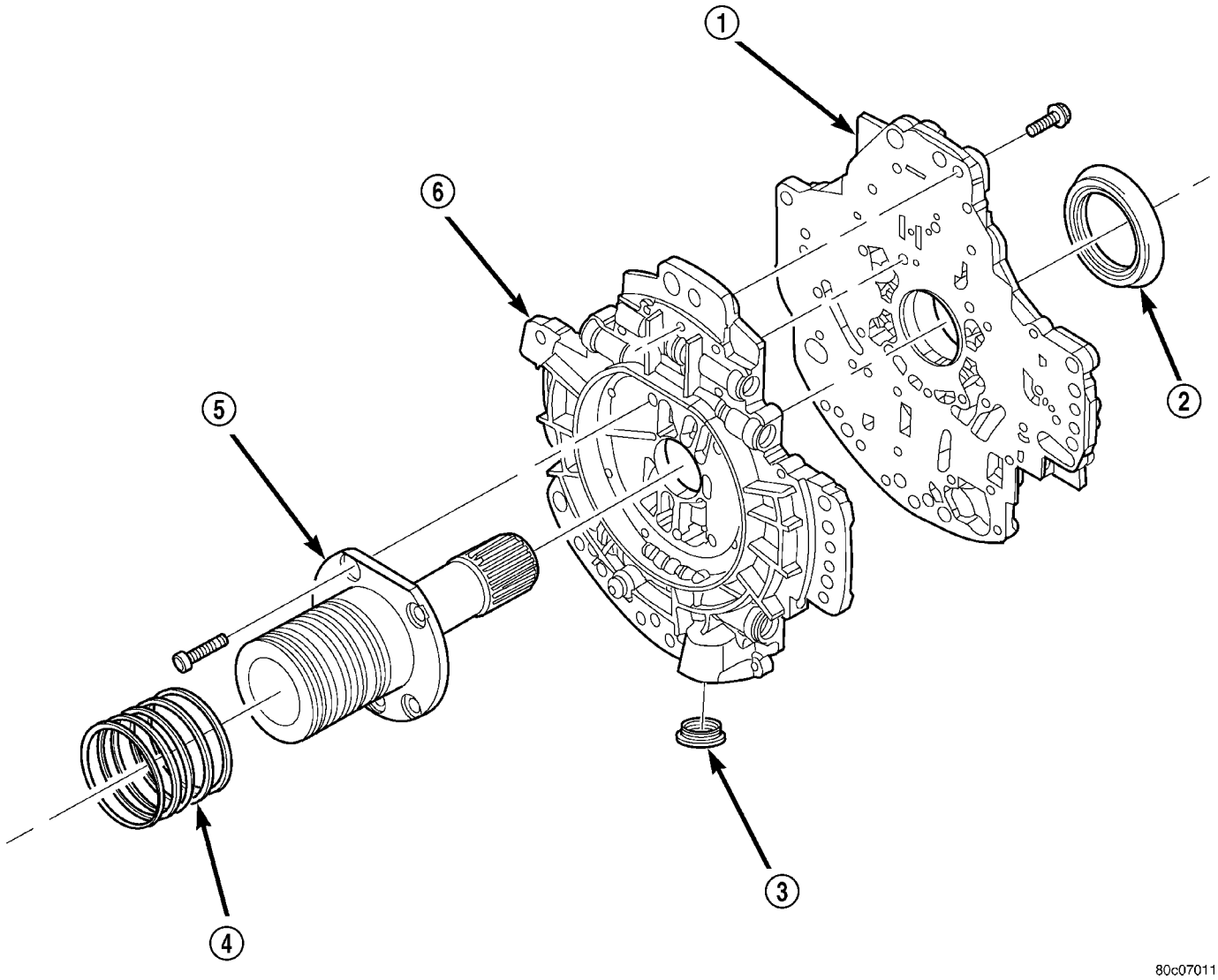

Fig. 113 Oil Pump Reaction Shaft

1 - PUMP HOUSING
2 - SEAL
3 - OIL FILTER SEAL
4 - SEAL RING (5)
5 - REACTION SHAFT SUPPORT
6 - PUMP VALVE BODY

CONVERTER CLUTCH REGULATOR VALVE

The converter clutch regulator valve is used to control the hydraulic pressure supplied to the back (ON) side of the torque converter clutch.

TORQUE CONVERTER LIMIT VALVE

The torque converter limit valve serves to limit the available line pressure to the torque converter clutch.

STANDARD PROCEDURE - OIL PUMP VOLUME CHECK

Measuring the oil pump output volume will determine if sufficient oil flow to the transmission oil cooler exists, and whether or not an internal transmission failure is present.

Verify that the transmission fluid is at the proper level. Refer to the Fluid Level Check procedure in this section. If necessary, fill the transmission to the proper level with Mopar® ATF +4, Automatic Transmission Fluid.

(1) Disconnect the **To cooler** line at the cooler inlet and place a collecting container under the disconnected line.

CAUTION: With the fluid set at the proper level, fluid collection should not exceed (1) quart or internal damage to the transmission may occur.

(2) Run the engine **at 1800 rpm**, with the shift selector in neutral. Verify that the transmission fluid temperature is below 104.5° C (220° F) for this test.

OIL PUMP (Continued)

(3) If one quart of transmission fluid is collected in the container in 30 seconds or less, oil pump flow volume is within acceptable limits. If fluid flow is intermittent, or it takes more than 30 seconds to collect one quart of fluid, refer to the Hydraulic Pressure tests in this section for further diagnosis.

(4) Re-connect the **To cooler** line to the transmission cooler inlet.

(5) Refill the transmission to proper level.

DISASSEMBLY

(1) Remove the bolts holding the reaction shaft support (5) to the oil pump. (Fig. 114)

(2) Remove the reaction shaft support (5) from the oil pump. (Fig. 114)

(3) Remove all bolts holding the oil pump halves together. (Fig. 114)

(4) Using suitable prying tools, separate the oil pump sections by inserting the tools in the supplied areas and prying the halves apart.

NOTE: The oil pump halves are aligned to each other through the use of two dowels. Be sure to pry upward evenly to prevent damage to the oil pump components.

(5) Remove the screws (7) holding the separator plate (1) onto the oil pump housing (4). (Fig. 115)

(6) Remove the separator plate (1) from the oil pump housing (4). (Fig. 115)

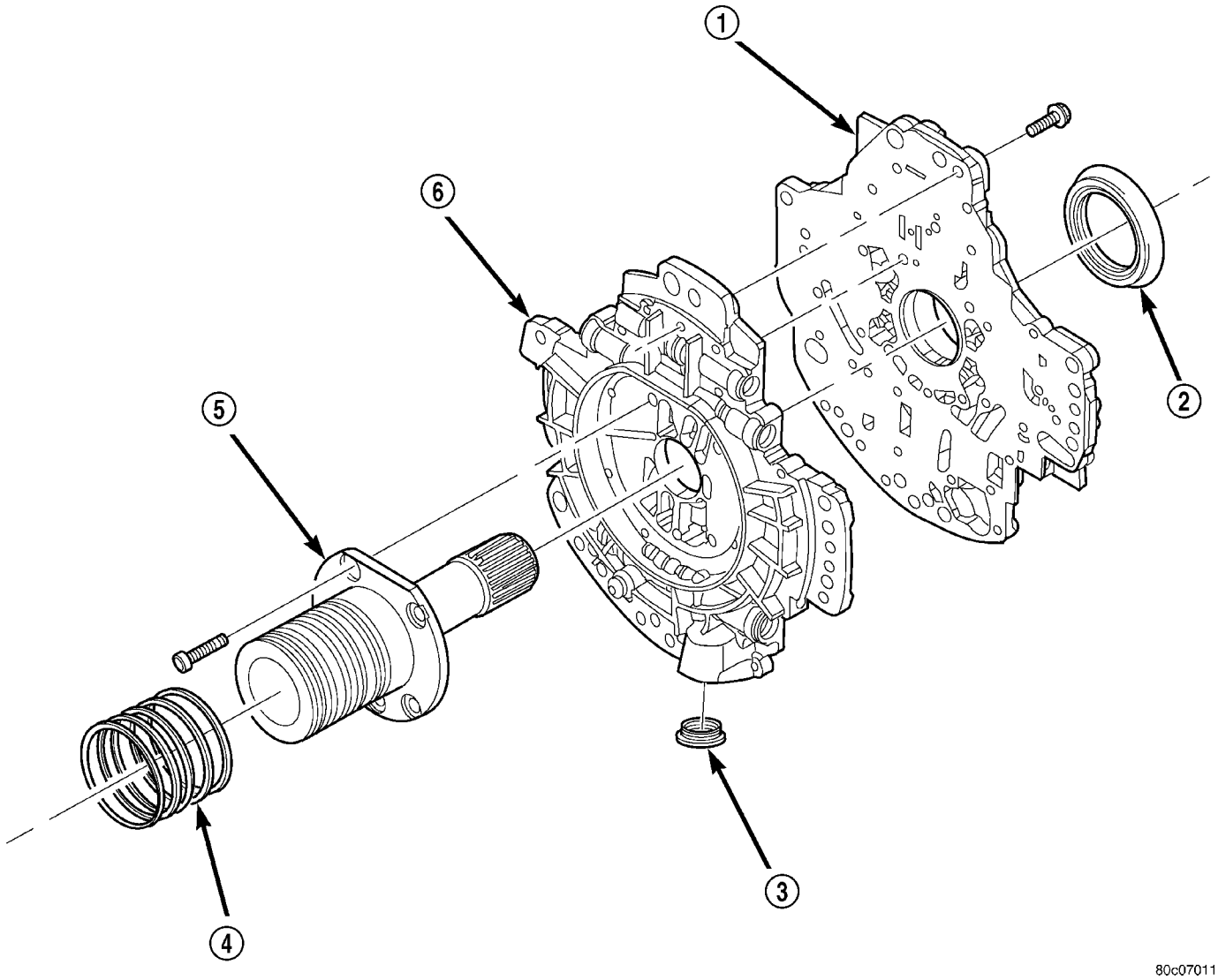

Fig. 114 Oil Pump Assembly

1 - PUMP HOUSING
2 - SEAL
3 - OIL FILTER SEAL
4 - SEAL RING (5)
5 - REACTION SHAFT SUPPORT
6 - PUMP VALVE BODY

OIL PUMP (Continued)

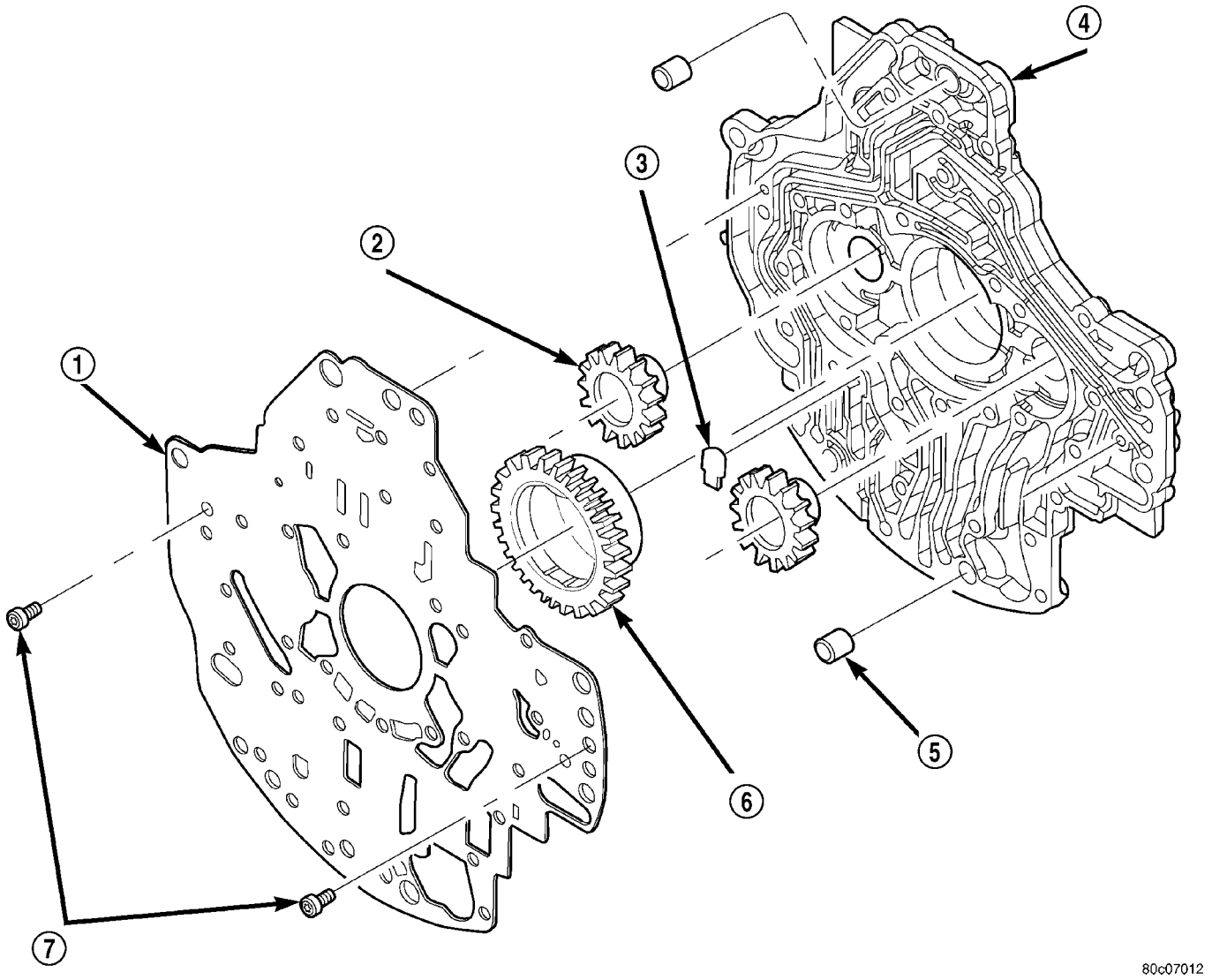

Fig. 115 Oil Pump Housing and Gears

1 - SEPARATOR PLATE
2 - DRIVEN GEAR (2)
3 - CHECK VALVE
4 - PUMP HOUSING
5 - DOWEL (2)
6 - DRIVE GEAR
7 - SCREW

(7) Mark all gears for location. The gears are select fit and if the oil pump is to be reused, the gears must be returned to their original locations.

(8) Remove the oil pump gears (2, 6) from the oil pump housing (4). (Fig. 115)

OIL PUMP (Continued)

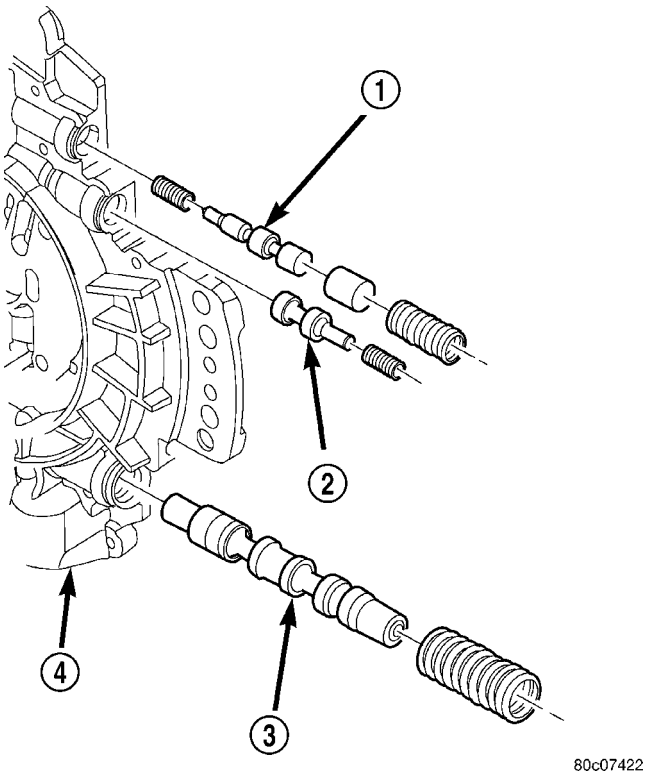

Fig. 116 Oil Pump Valve Body

1 - T/C REGULATOR VALVE
2 - T/C LIMIT VALVE
3 - REGULATOR VALVE
4 - OIL PUMP VALVE BODY

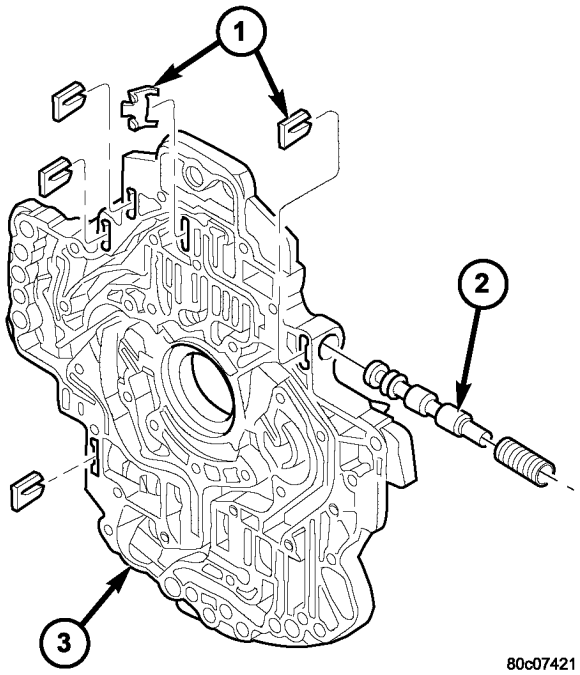

Fig. 117 T/C Switch Valve

1 - RETAINER
2 - T/C SWITCH VALVE
3 - OIL PUMP VALVE BODY

(9) Remove the oil pump valve retainers (1) and associated valve (2) and spring one at a time. (Fig. 116) (Fig. 117) Mark the combination of components as a group and tag them as to the location from which they were removed.

CLEANING

Clean pump and support components with solvent and dry them with compressed air.

INSPECTION

Check condition of the seal rings and thrust washer on the reaction shaft support. The seal rings do not need to be replaced unless cracked, broken, or severely worn.

Inspect the pump and support components. Replace the pump or support if the seal ring grooves or machined surfaces are worn, scored, pitted, or damaged. Replace the pump gears if pitted, worn chipped, or damaged.

Inspect the pump reaction shaft support bushings. Replace either bushing only if heavily worn, scored or damaged. It is not necessary to replace the bushings unless they are actually damaged.

Inspect the valves and plugs for scratches, burrs, nicks, or scores. Minor surface scratches on steel valves and plugs can be removed with crocus cloth but **do not round off the edges of the valve or plug lands.** Maintaining sharpness of these edges is vitally important. The edges prevent foreign matter from lodging between the valves and plugs and the bore.

Inspect all the valve and plug bores in the oil pump cover. Use a penlight to view the bore interiors. Replace the oil pump if any bores are distorted or scored. Inspect all of the valve springs. The springs must be free of distortion, warpage or broken coils.

Trial fit each valve and plug in its bore to check freedom of operation. When clean and dry, the valves and plugs should drop freely into the bores.

ASSEMBLY

NOTE: Clean and inspect all components. Make sure that all passages are thoroughly cleaned and are free from dirt or debris. Make sure that all valves move freely in their proper bore. Make sure that all gear pockets and bushings are free from excessive wear and scoring. Replace the oil pump if any excessive wear or scoring is found.

OIL PUMP (Continued)

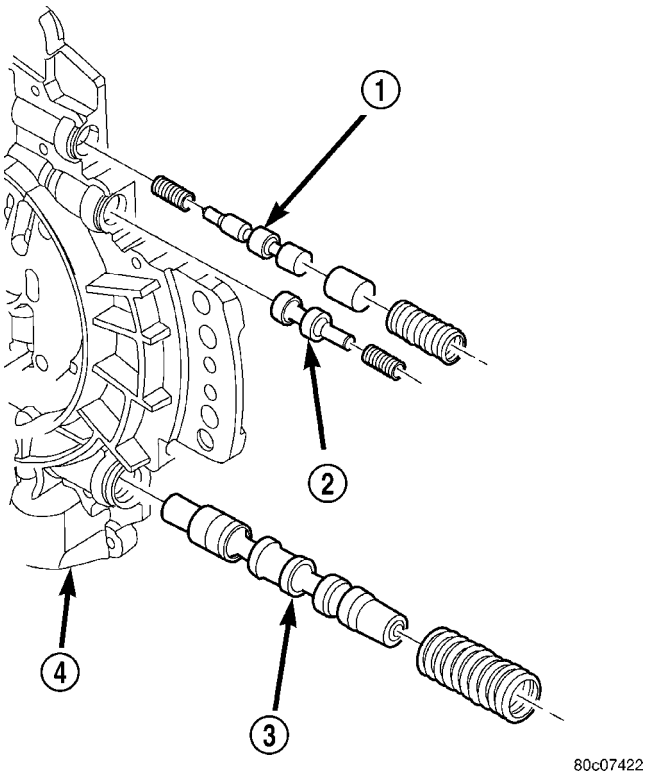

Fig. 118 Oil Pump Valve Body

1 - T/C REGULATOR VALVE
2 - T/C LIMIT VALVE
3 - REGULATOR VALVE
4 - OIL PUMP VALVE BODY

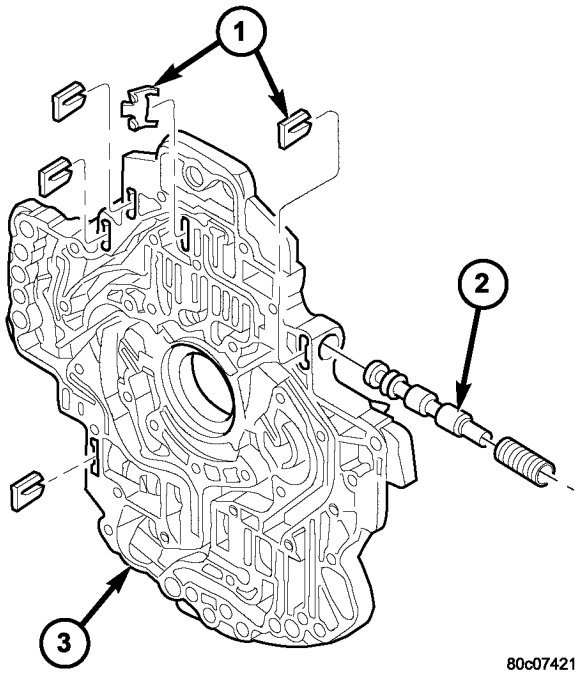

Fig. 119 T/C Switch Valve

1 - RETAINER
2 - T/C SWITCH VALVE
3 - OIL PUMP VALVE BODY

(1) Lubricate the oil pump valves with Mopar® ATF +4 and install the valve, spring and retainer into the appropriate oil pump valve body (4) bore. (Fig. 118) (Fig. 119)

(2) Coat the gears (2, 6) with Mopar® ATF +4 and install into their original locations.

(3) Place the separator plate (1) onto the oil pump housing (4). (Fig. 120)

(4) Install the screws(7) (Fig. 120) to hold the separator plate (1) onto the oil pump housing (4). Tighten the screws to 4.5 N·m (40 in.lbs.).

(5) Position the oil pump valve body (6) onto the locating dowels. (Fig. 121)

(6) Seat the two oil pump halves together and install all bolts finger tight.

(7) Torque all bolts down slowly starting in the center and working outward. The correct torque is 4.5 N·m (40 in.lbs.).

(8) Verify that the oil pump gears rotate freely and smoothly.

(9) Position the reaction shaft support (5) onto the oil pump valve body (6). (Fig. 121)

(10) Install and torque the bolts (Fig. 121) to hold the reaction shaft support (5) to the oil pump valve body (6). The correct torque is 12 N·m (105 in.lbs.).

OIL PUMP (Continued)

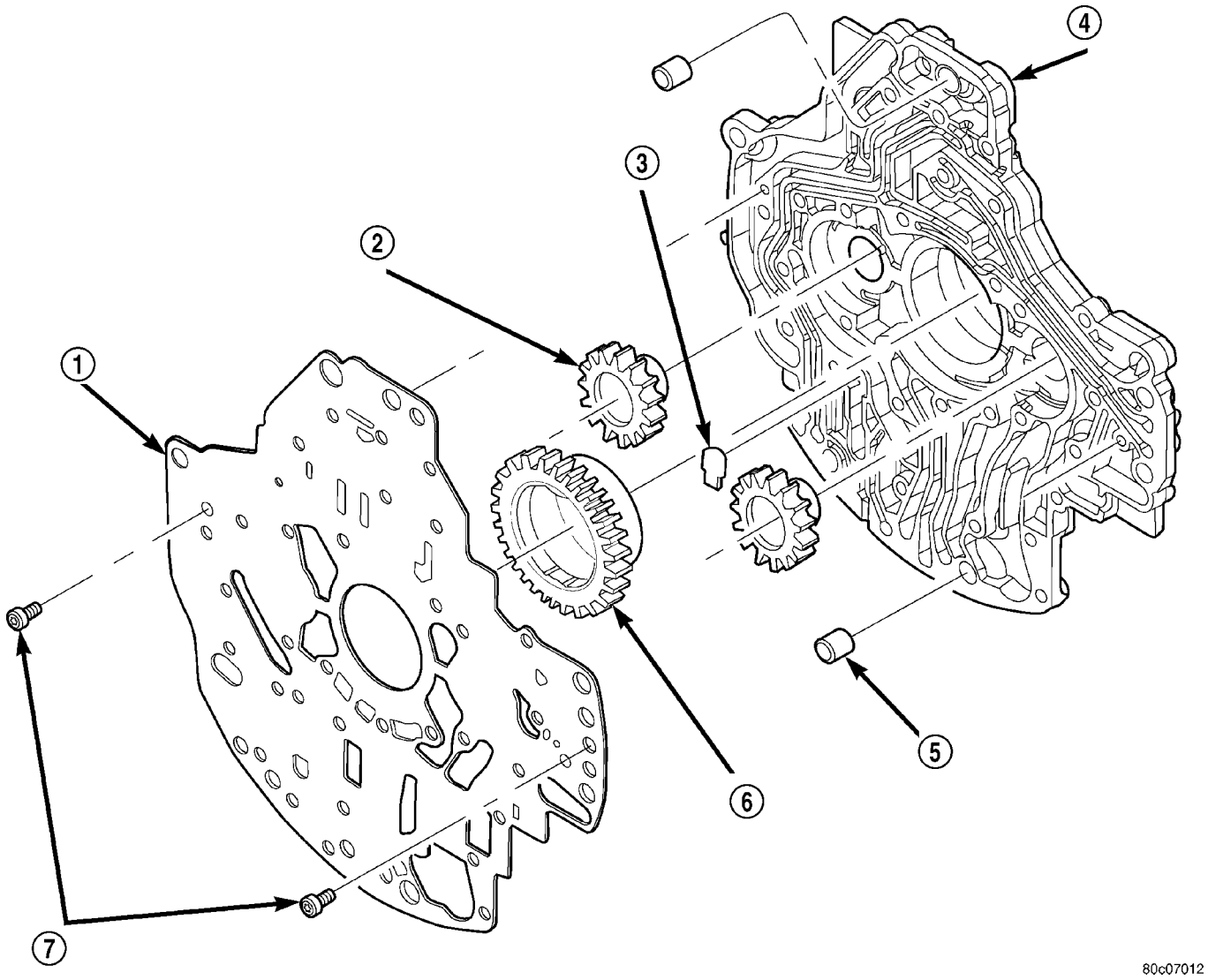

Fig. 120 Oil Pump Housing and Gears

1 - SEPARATOR PLATE
2 - DRIVEN GEAR (2)
3 - CHECK VALVE
4 - PUMP HOUSING
5 - DOWEL (2)
6 - DRIVE GEAR
7 - SCREW

OIL PUMP (Continued)

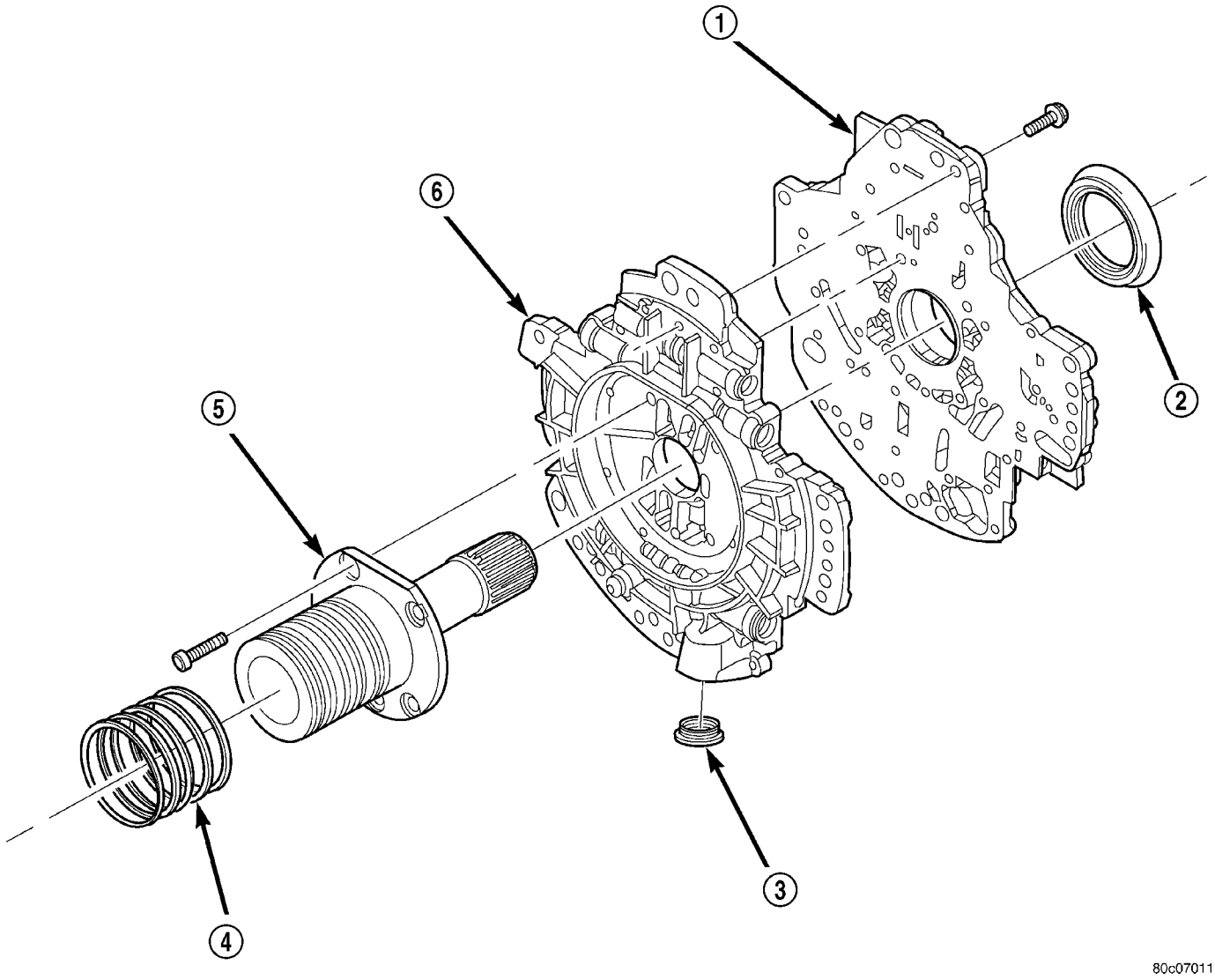

Fig. 121 Oil Pump Assembly

1 - PUMP HOUSING
2 - SEAL
3 - OIL FILTER SEAL
4 - SEAL RING (5)
5 - REACTION SHAFT SUPPORT
6 - PUMP VALVE BODY

OIL PUMP FRONT SEAL

REMOVAL

(1) Remove transmission from the vehicle.

(2) Remove the torque converter from the transmission.

(3) Using a screw mounted in a slide hammer, remove the oil pump front seal.

INSTALLATION

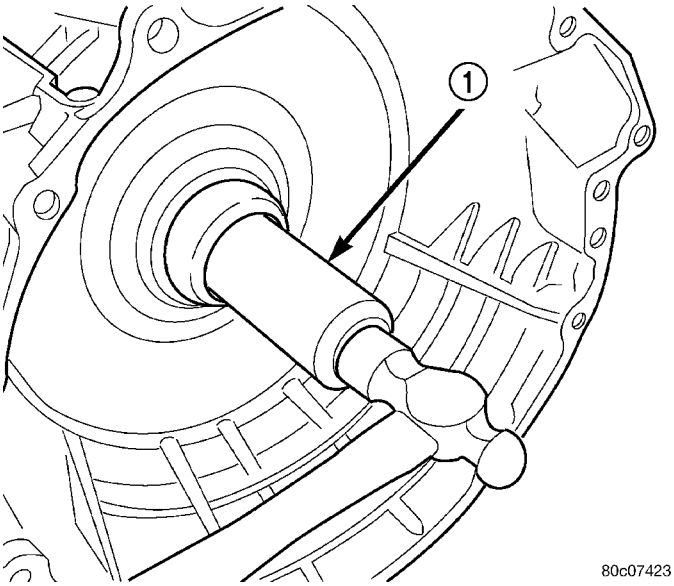

Fig. 122 Install Oil Pump Front Seal

1 - TOOL C-3860-A

(1) Clean seal bore of the oil pump of any residue or particles from the original seal.

(2) Install new oil seal in the oil pump housing using Seal Installer C-3860-A (1) (Fig. 122).

OUTPUT SPEED SENSOR

DESCRIPTION

The Input and Output Speed Sensors are two-wire magnetic pickup devices that generate AC signals as rotation occurs. They are mounted in the left side of the transmission case and are considered primary inputs to the Transmission Control Module (TCM).

OPERATION

The Input Speed Sensor provides information on how fast the input shaft is rotating. As the teeth of the input clutch hub pass by the sensor coil, an AC voltage is generated and sent to the TCM. The TCM interprets this information as input shaft rpm.

The Output Speed Sensor generates an AC signal in a similar fashion, though its coil is excited by rotation of the rear planetary carrier lugs. The TCM interprets this information as output shaft rpm.

The TCM compares the input and output speed signals to determine the following:

- Transmission gear ratio
- Speed ratio error detection
- CVI calculation

The TCM also compares the input speed signal and the engine speed signal to determine the following:

- Torque converter clutch slippage
- Torque converter element speed ratio

REMOVAL

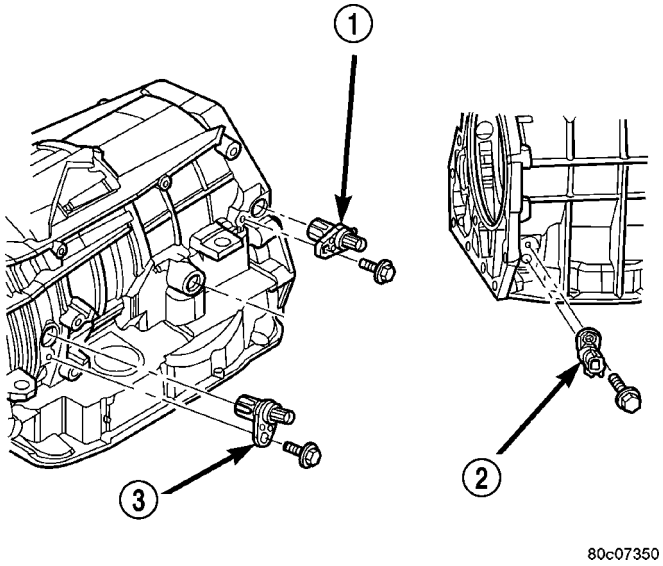

Fig. 123 Output Speed Sensor

1 - OUTPUT SPEED SENSOR
2 - LINE PRESSURE SENSOR
3 - INPUT SPEED SENSOR

(1) Raise vehicle.

(2) Place a suitable fluid catch pan under the transmission.

(3) Remove the wiring connector from the output speed sensor (1) (Fig. 123).

(4) Remove the bolt holding the output speed sensor (1) to the transmission case.

(5) Remove the output speed sensor (1) from the transmission case.

OUTPUT SPEED SENSOR (Continued)

INSTALLATION

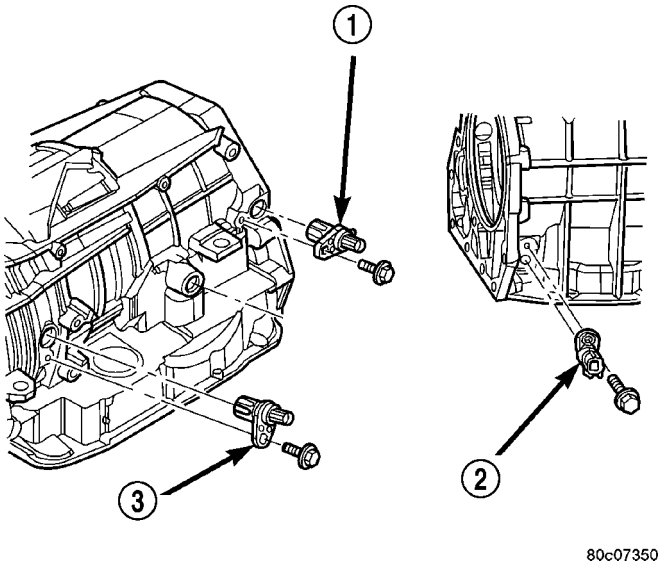

Fig. 124 Output Speed Sensor

1 - OUTPUT SPEED SENSOR
2 - LINE PRESSURE SENSOR
3 - INPUT SPEED SENSOR

(1) Install the output speed sensor (1) (Fig. 124) into the transmission case.

(2) Install the bolt to hold the output speed sensor (1) into the transmission case. Tighten the bolt to 11.9 N·m (105 in.lbs.).

(3) Install the wiring connector onto the output speed sensor (1).

(4) Verify the transmission fluid level. Add fluid as necessary.

(5) Lower vehicle.

OVERDRIVE SWITCH

DESCRIPTION

The overdrive OFF (control) switch is located in the shifter handle. The switch is a momentary contact device that signals the PCM to toggle current status of the overdrive function.

OPERATION

At key-on, fourth gear operation is allowed. Pressing the switch once causes the overdrive OFF mode to be entered and the overdrive OFF switch lamp to be illuminated. Pressing the switch a second time causes normal overdrive operation to be restored and the overdrive lamp to be turned off. The overdrive OFF mode defaults to ON after the ignition switch is cycled OFF and ON. The normal position for the control switch is the ON position. The switch must be in this position to energize the solenoids and allow upshifts to fourth gear. The control switch indicator light illuminates only when the overdrive switch is turned to the OFF position, or when illuminated by the transmission control module.

PARK INTERLOCK CABLE

REMOVAL

(1) Lower the steering column.

(2) With the ignition switch in the “RUN” position depress the park-interlock cable locking tab, located on top of the cable connector (Fig. 125) at the steering column and pull the cable straight out.

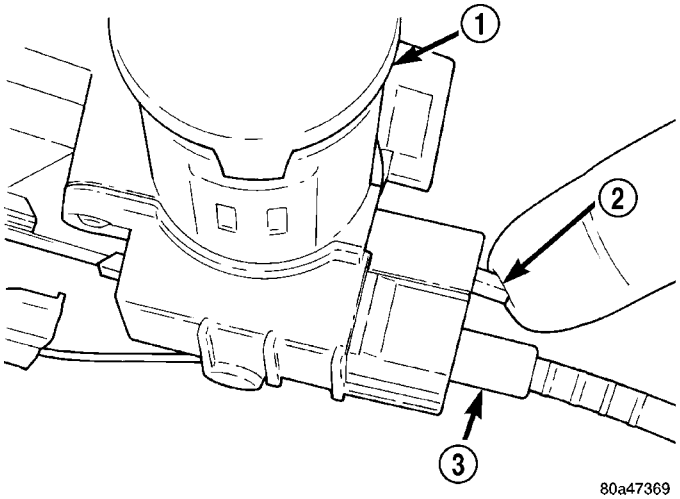

Fig. 125 Park-Interlock Cable

1 - IGNITION LOCK
2 - LOCK TAB
3 - CABLE END

(3) Remove the park-interlock cable from steering column.

(4) Remove the floor console and related trim. (Refer to 23 - BODY/INTERIOR/FLOOR CONSOLE - REMOVAL)

(5) Disconnect the park-interlock cable from the shift lever assembly and remove the cable from the shifter assembly bracket (Fig. 126).

(6) Release the park-interlock cable from any remaining clips.

(7) Remove park-interlock cable from the vehicle.

INSTALLATION

NOTE: The gearshift cable must be secured into position and properly adjusted before the installation of the Park-Interlock Cable.

(1) Push the park-interlock cable straight into the square mounting hole in the steering column until cable snaps in place (Fig. 127).

PARK INTERLOCK CABLE (Continued)

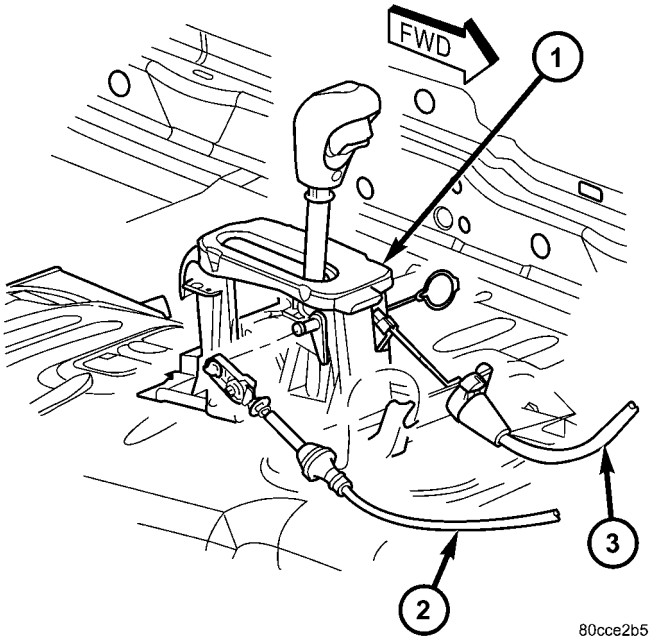

Fig. 126 Shift Cables At Shifter

1 - SHIFTER ASSEMBLY
2 - GEARSHIFT CABLE
3 - BTSI CABLE

(2) Snap park-interlock cable tie strap into hole in steering column tube.

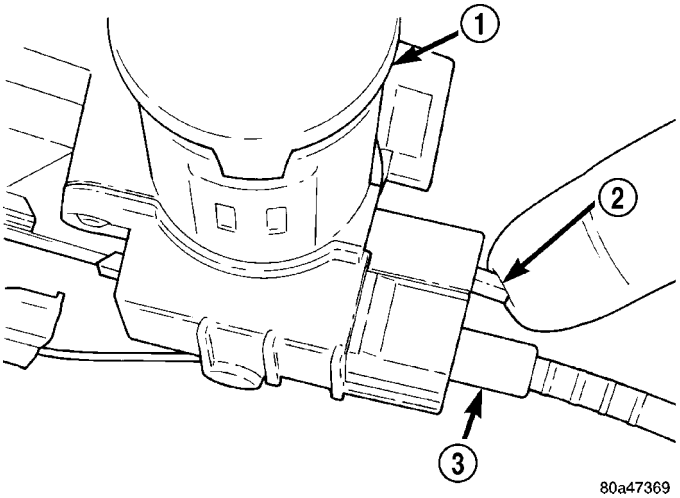

Fig. 127 Brake/Park Interlock Cable

1 - IGNITION LOCK
2 - LOCK TAB
3 - CABLE END

(3) Route cable to the shifter mechanism.

(4) Install the cable end fitting into shifter lever (Fig. 128).

(5) Snap cable adjuster ears into floor shifter bracket.

(6) Place the ignition key cylinder in the LOCK position.

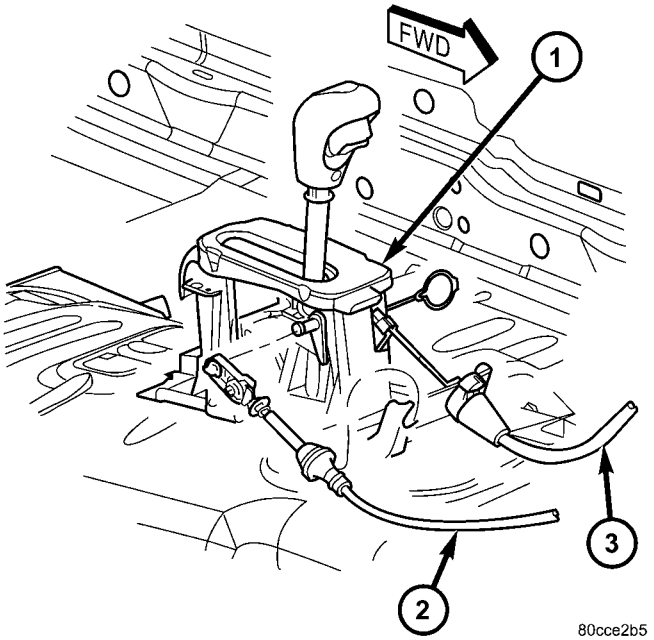

Fig. 128 Transmission Shift Cable At Shifter

1 - SHIFTER ASSEMBLY
2 - GEARSHIFT CABLE
3 - BTSI CABLE

(7) Push the cable adjuster lock clamp downward to lock it.

(8) Test the park-interlock cable operation.

(9) Install the floor console and related trim. (Refer to 23 - BODY/INTERIOR/FLOOR CONSOLE - INSTALLATION)

ADJUSTMENTS - PARK-INTERLOCK CABLE

The park-interlock cable is part of the Brake Transmission Shift Interlock (BTSI) system. Correct cable adjustment is important to proper interlock operation. The gear shift and park lock cables must both be correctly adjusted in order to shift out of PARK.

(1) Remove floor console as necessary for access to the park-interlock cable. (Refer to 23 - BODY/INTERIOR/FLOOR CONSOLE - REMOVAL)

(2) Shift the transmission into the PARK position.

(3) Turn ignition switch to LOCK position. **Be sure ignition key cylinder is in the LOCK position. Cable will not adjust correctly in any other position.**

(4) Pull cable lock button up to release cable (Fig. 129).

(5) Ensure that the cable is free to self-adjust by pushing cable rearward and releasing.

(6) Push lock button down until it snaps in place.

PARK INTERLOCK CABLE (Continued)

(7) Verify proper operation. (Refer to 21 - TRANSMISSION/AUTOMATIC/SHIFT INTERLOCK SYSTEM - DIAGNOSIS AND TESTING)

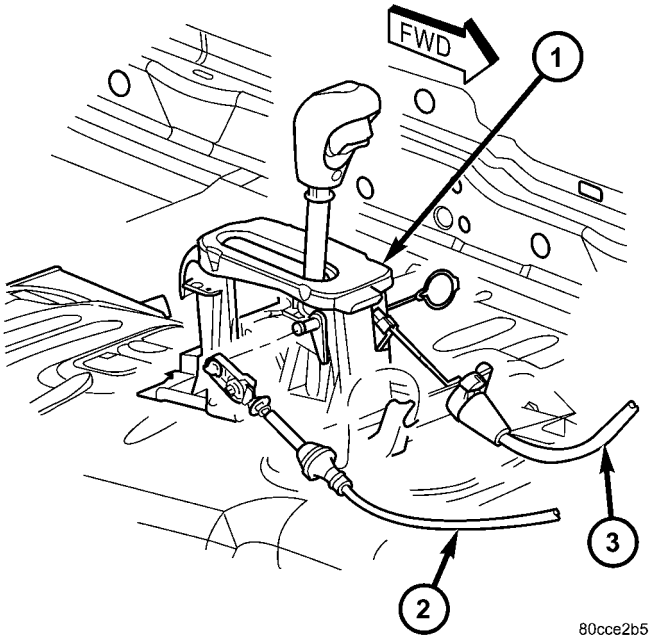

Fig. 129 Shift Cables At Shifter

1 - SHIFTER ASSEMBLY
2 - GEARSHIFT CABLE
3 - BTSI CABLE

PLANETARY GEARTRAIN

DESCRIPTION

The planetary geartrain is located behind the 4C retainer/bulkhead, toward the rear of the transmission. The planetary geartrain consists of three primary assemblies:

- Reaction (3, 4, 8) (Fig. 130).
- Reverse (7) (Fig. 131).
- Input (4, 5, 6) (Fig. 131).

OPERATION

REACTION PLANETARY GEARTRAIN

The reaction planetary carrier and reverse sun gear of the reaction planetary geartrain are a single component which is held by the 2C clutch when required. The reaction annulus gear is a stand alone component that can be driven by the reverse clutch or held by the 4C clutch. The reaction sun gear is driven by the overdrive clutch.

REVERSE PLANETARY GEARTRAIN

The reverse planetary geartrain is the middle of the three planetary sets. The reverse planetary carrier can be driven by the overdrive clutch as required. The reverse planetary carrier is also splined to the input annulus gear, which can be held by the low/reverse clutch. The reverse planetary annulus, input planetary carrier, and output shaft are all one piece.

PLANETARY GEARTRAIN (Continued)

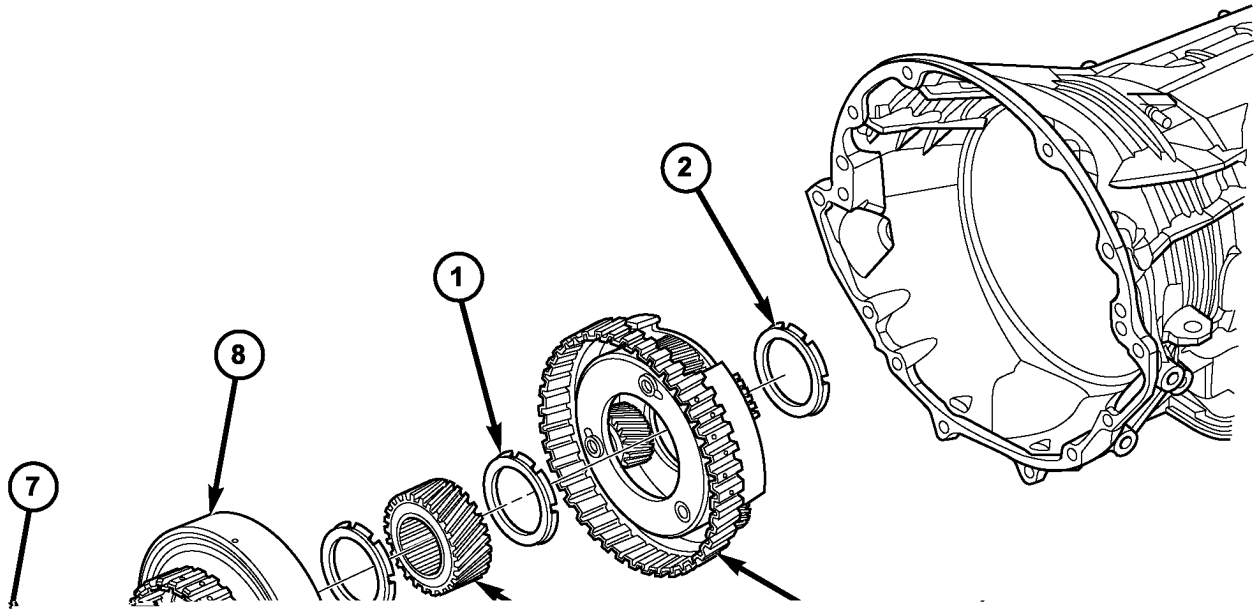

Fig. 130 Reaction Planetary Geartrain

1 - THRUST BEARING NUMBER 8
2 - THRUST BEARING NUMBER 9
3 - REACTION PLANETARY CARRIER
4 - REACTION SUN GEAR
5 - THRUST BEARING NUMBER 7
6 - THRUST PLATE (SELECT)
7 - THRUST BEARING NUMBER 6
8 - REACTION ANNULUS

PLANETARY GEARTRAIN (Continued)

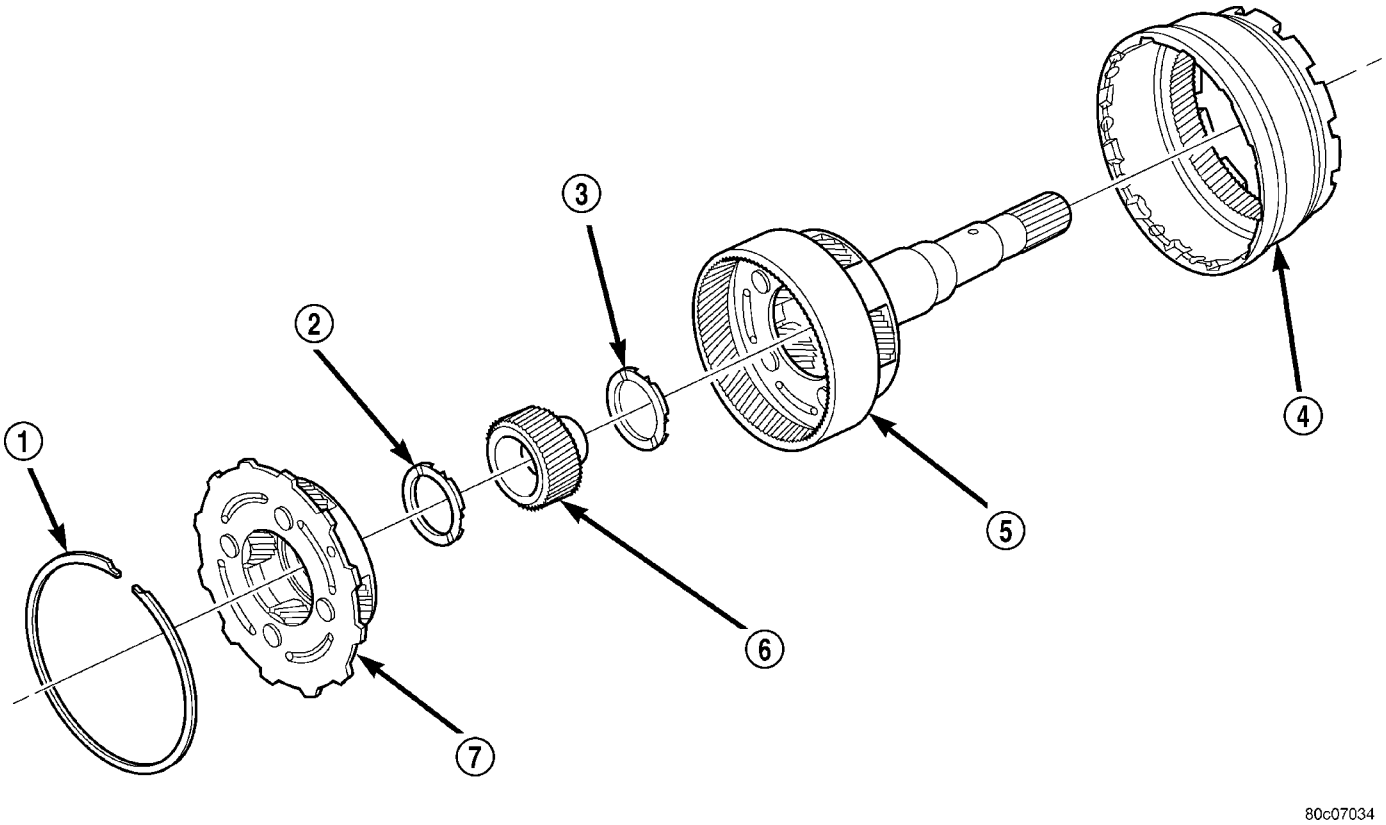

Fig. 131 Reverse/Input Planetary Geartrain

1 - SNAP-RING
2 - THRUST BEARING NUMBER 10
3 - THRUST BEARING NUMBER 11
4 - INPUT ANNULUS
5 - INPUT PLANETARY CARRIER
6 - INPUT SUN GEAR
7 - REVERSE PLANETARY CARRIER

PLANETARY GEARTRAIN (Continued)

INPUT PLANETARY GEARTRAIN

The input sun gear of the input planetary geartrain is driven by the underdrive clutch.

DISASSEMBLY

(1) Remove the snap-ring (1) holding the input annulus (4) into the input carrier (5) (Fig. 132).

(2) Remove the input annulus (4) from the input carrier (5) (Fig. 132).

(3) Remove the number 9 thrust bearing from the reverse planetary carrier. Note that this planetary carrier has four pinion gears.

(4) Remove the reverse planetary gear carrier (7) (Fig. 132).

(5) Remove the number 10 thrust bearing (2) from the input sun gear (6) (Fig. 132).

(6) Remove the input sun gear (6) from the input carrier (5) (Fig. 132).

(7) Remove the number 11 thrust bearing (3) from the input carrier (5) (Fig. 132).

CLEANING

Clean the planetary components in solvent and dry them with compressed air.

INSPECTION

Check sun gear and driving shell condition. Replace the gear if damaged or if the bushings are scored or worn. The bushings are not serviceable. Replace the driving shell if worn, cracked or damaged.

Replace planetary gear sets if gears, pinion pins, or carrier are damaged in any way. Replace the annulus gears and supports if either component is worn or damaged.

Replace the output shaft if the machined surfaces are scored, pitted, or damaged in any way. Also replace the shaft if the splines are damaged, or exhibits cracks at any location.

ASSEMBLY

NOTE: Clean and inspect all components. Replace any components which show evidence of excessive wear or scoring.

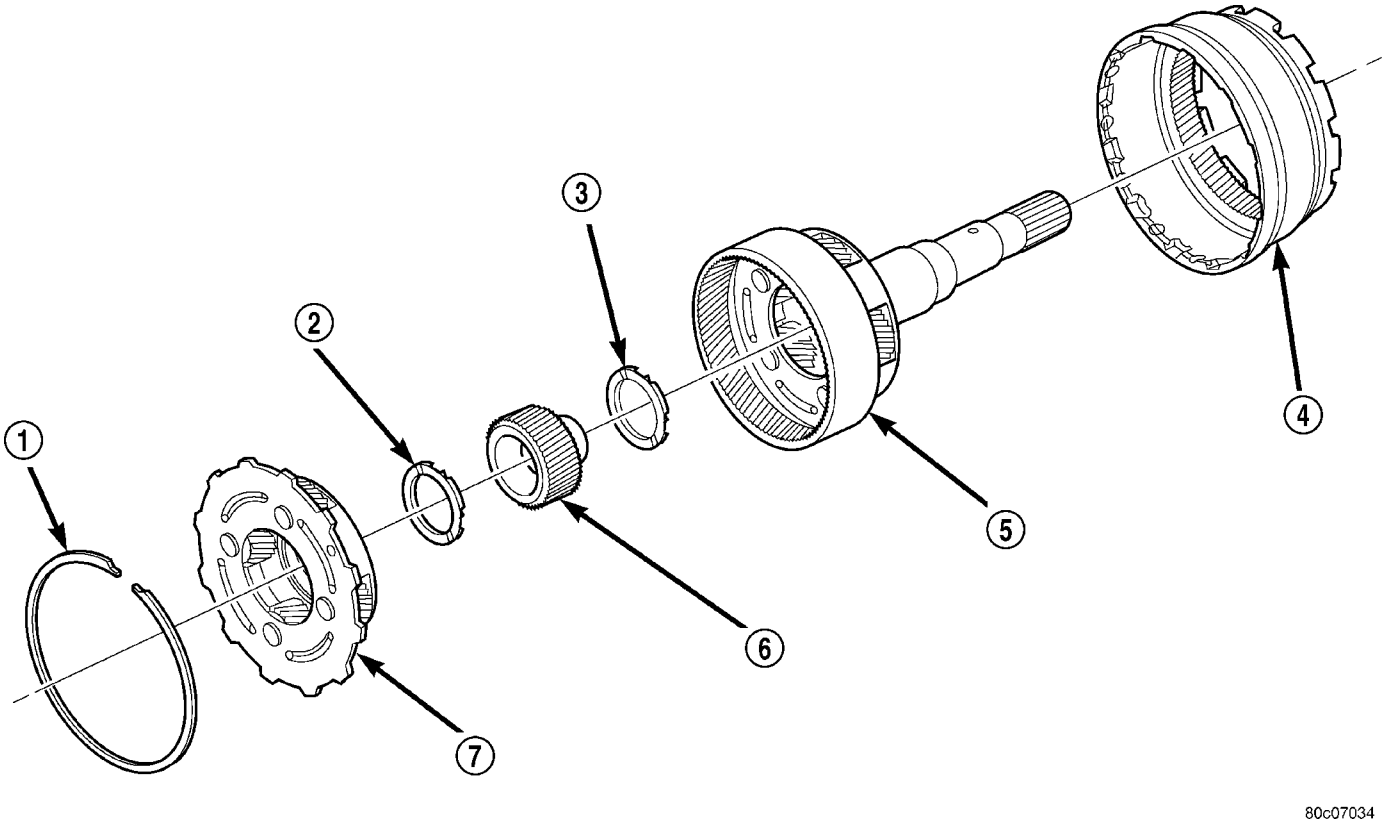

Fig. 132 Reverse/Input Planetary Carrier Assembly

1 - SNAP-RING
2 - THRUST BEARING NUMBER 10
3 - THRUST BEARING NUMBER 11
4 - INPUT ANNULUS
5 - INPUT PLANETARY CARRIER
6 - INPUT SUN GEAR
7 - REVERSE PLANETARY CARRIER

PLANETARY GEARTRAIN (Continued)

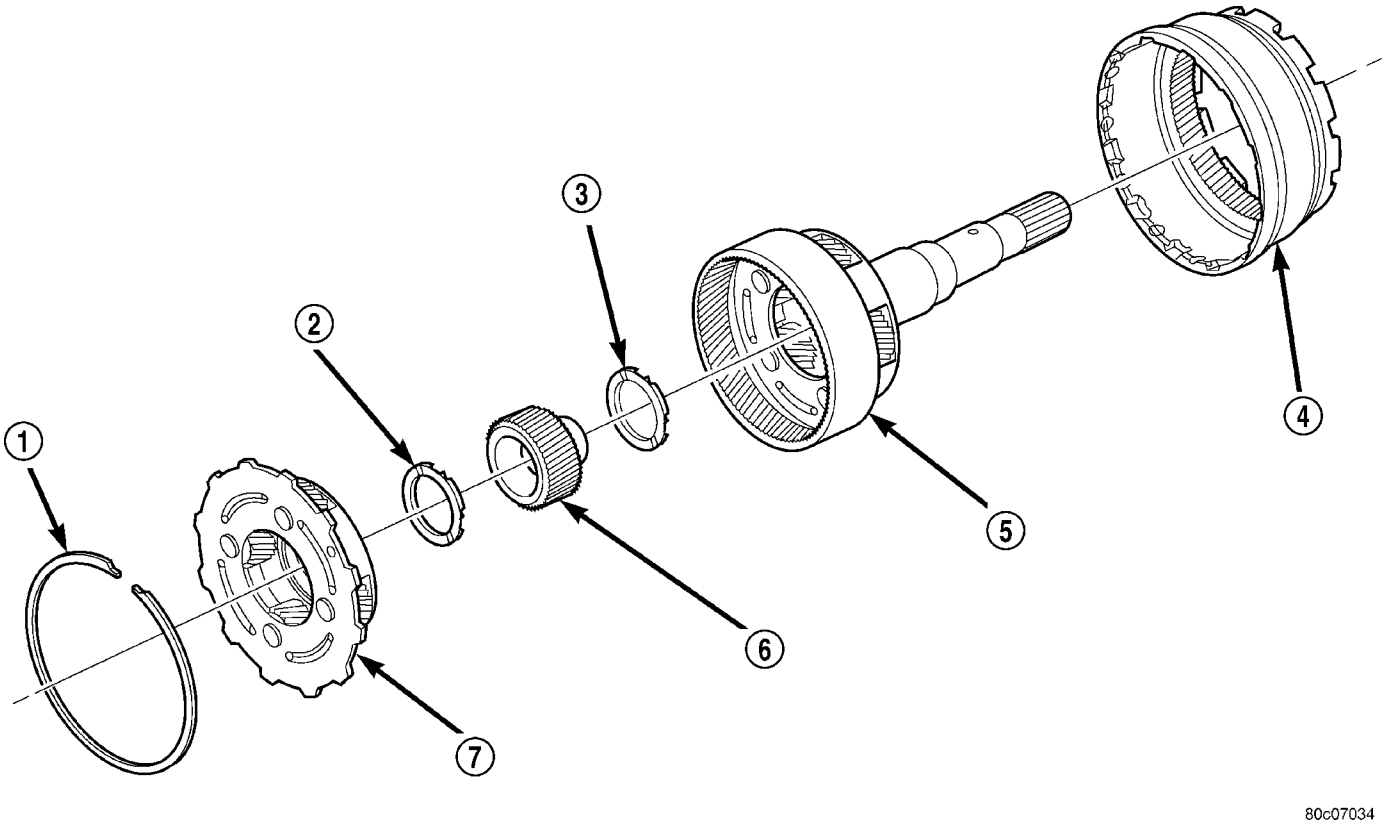

Fig. 133 Reverse/Input Planetary Carrier Assembly

1 - SNAP-RING
2 - THRUST BEARING NUMBER 10
3 - THRUST BEARING NUMBER 11
4 - INPUT ANNULUS
5 - INPUT PLANETARY CARRIER
6 - INPUT SUN GEAR
7 - REVERSE PLANETARY CARRIER

(1) Install the number 11 thrust bearing (3) into the input planetary carrier (5) so that the inner race will be toward the front of the transmission (Fig. 133).

(2) Install the input sun gear (6) into the input carrier (5) (Fig. 133).

(3) Install the number 10 thrust bearing (2) onto the rear of the reverse planetary carrier (7) with the inner race toward the carrier (Fig. 133).

(4) Install the number 9 thrust bearing onto the front of the reverse planetary carrier (7) with the outer race toward the carrier and the inner race facing upward (Fig. 133).

(5) Install the reverse planetary gear carrier (7) into the input carrier (5) (Fig. 133).

(6) Install the input annulus gear (4) into the input carrier (5) (Fig. 133).

(7) Install the snap-ring (1) to hold the input annulus gear (4) into the input carrier (5) (Fig. 133).

SHIFT MECHANISM

DESCRIPTION

The gear shift mechanism provides six shift positions which are:

- Park (P)
- Reverse (R)
- Neutral (N)
- Drive (D)
- Manual second (2)
- Manual low (1)

OPERATION

MANUAL LOW (1) range provides FIRST gear only. Overrun braking is also provided in this range. MANUAL SECOND (2) range provides FIRST and SECOND gear only.

DRIVE range provides FIRST, SECOND, THIRD and OVERDRIVE FOURTH and FIFTH gear ranges. The shift into OVERDRIVE FOURTH and FIFTH gear range occurs only after the transmission has completed the shift into D THIRD gear range. No

SHIFT MECHANISM (Continued)

further movement of the shift mechanism is required to complete the 3-4 or 4-5 shifts.

The FOURTH and FIFTH gear upshifts occurs automatically when the overdrive selector switch is in the ON position. An upshift to FOURTH and FIFTH gears may not occur or may be delayed in some of the possible shift schedules. (Refer to 8 - ELECTRICAL/ELECTRONIC CONTROL MODULES/TRANSMISSION CONTROL MODULE - OPERATION)

REMOVAL

(1) Remove any necessary console parts for access to shift lever assembly and shifter cables. (Refer to 23 - BODY/INTERIOR/FLOOR CONSOLE - REMOVAL)

(2) Shift transmission into PARK.

(3) Disconnect the transmission shift cable at shift lever and shifter assembly bracket (Fig. 134).

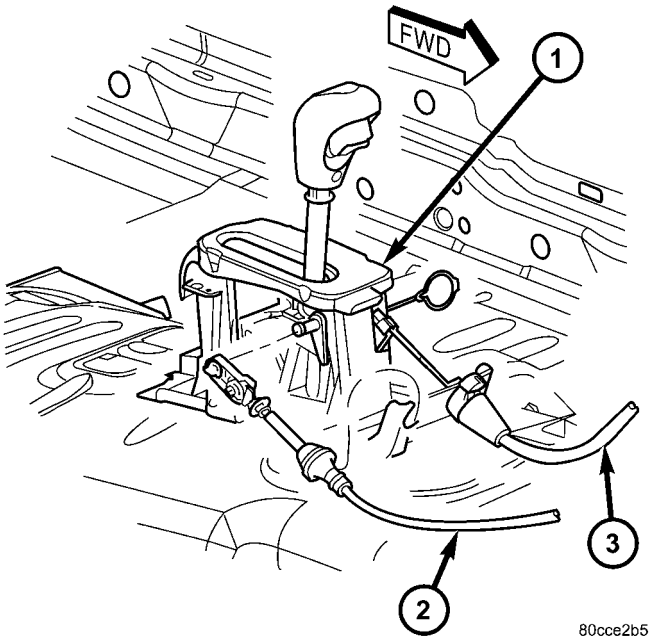

Fig. 134 Shift Cables At Shifter

1 - SHIFTER ASSEMBLY
2 - GEARSHIFT CABLE
3 - BTSI CABLE

(4) Disconnect the park-interlock cable from the shifter lever and the shifter assembly bracket.

(5) Disengage all wiring connectors from the shifter assembly.

(6) Remove all nuts holding the shifter assembly to the floor pan (Fig. 135).

(7) Remove the shifter assembly from the vehicle.

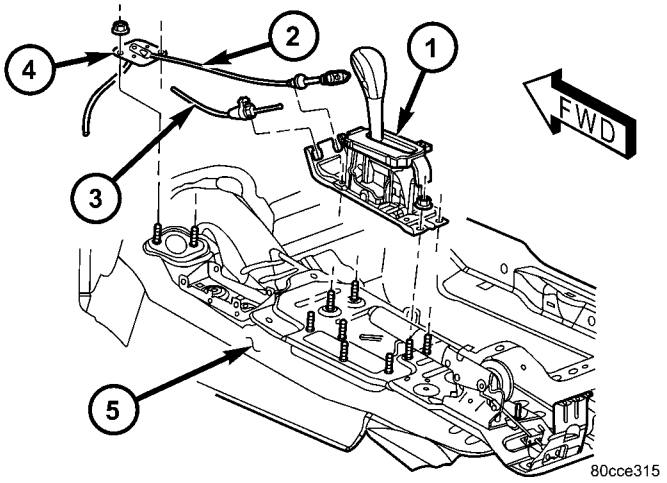

Fig. 135 Transmission Shifter Assembly

1 - SHIFTER ASSEMBLY
2 - GEARSHIFT CABLE
3 - PARK-INTERLOCK CABLE
4 - SHIFT CABLE SEAL PLATE
5 - FLOOR PAN

INSTALLATION

(1) Install shifter assembly onto the shifter assembly studs on the floor pan.

(2) Install the nuts to hold the shifter assembly onto the floor pan. Tighten nuts to 28 N·m (250 in.lbs.).

(3) Install wiring harness to the shifter assembly bracket. Engage any wire connectors removed from the shifter assembly.

(4) Install the park-interlock cable into the shifter assembly bracket and into the shifter lever.

(5) Install the shift cable to the shifter assembly bracket. Push cable into the bracket until secure.

(6) Place the floor shifter lever in park position.

(7) Loosen the adjustment screw on the shift cable.

(8) Snap the shift cable onto the shift lever pin.

(9) Verify that the shift lever is in the PARK position.

(10) Tighten the adjustment screw to 7 N·m (65 in.lbs.).

(11) Verify correct shifter operation.

(12) Verify proper BTSI operation. (Refer to 21 - TRANSMISSION/AUTOMATIC/SHIFT INTERLOCK SYSTEM - DIAGNOSIS AND TESTING) Adjust the park-interlock cable as necessary. (Refer to 21 - TRANSMISSION/AUTOMATIC/SHIFT INTERLOCK CABLE - ADJUSTMENTS)

(13) Install any console parts removed for access to shift lever assembly and shift cables. (Refer to 23 - BODY/INTERIOR/FLOOR CONSOLE - INSTALLATION)

SOLENOID SWITCH VALVE

DESCRIPTION

The Solenoid Switch Valve (SSV) is located in the valve body and controls the direction of the transmission fluid when the L/R-TCC solenoid is energized.

OPERATION

The Solenoid Switch Valve controls line pressure from the LR-TCC solenoid. In 1st gear, the SSV will be in the downshifted position, thus directing fluid to the L/R clutch circuit. In 2nd, 3rd, 4th, and 5th gears, the solenoid switch valve will be in the upshifted position and directs the fluid into the torque converter clutch (TCC) circuit.

When shifting into 1st gear, a special hydraulic sequence is performed to ensure SSV movement into the downshifted position. The L/R pressure switch is monitored to confirm SSV movement. If the movement is not confirmed (the L/R pressure switch does not close), 2nd gear is substituted for 1st. A DTC will be set after three unsuccessful attempts are made to get into 1st gear in one given key start.

TORQUE CONVERTER

DESCRIPTION

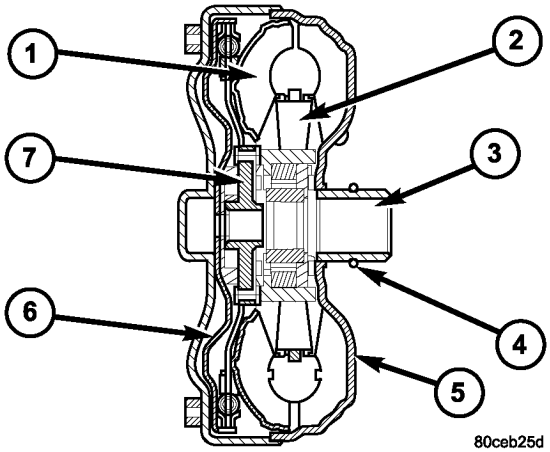

Fig. 136 Torque Converter Assembly

1 - TURBINE ASSEMBLY
2 - STATOR
3 - CONVERTER HUB
4 - O-RING
5 - IMPELLER ASSEMBLY
6 - CONVERTER CLUTCH PISTON
7 - TURBINE HUB

The torque converter (Fig. 136) is a hydraulic device that couples the engine crankshaft to the transmission. The torque converter consists of an outer shell with an internal turbine (1), a stator (2), an overrunning clutch, an impeller (5), and an electronically applied converter clutch (6). The converter clutch provides reduced engine speed and greater fuel economy when engaged. Clutch engagement also provides reduced transmission fluid temperatures. The torque converter hub (3) drives the transmission oil (fluid) pump and contains an o-ring seal (4) to better control oil flow.

The torque converter is a sealed, welded unit that is not repairable and is serviced as an assembly.

CAUTION: The torque converter must be replaced if a transmission failure resulted in large amounts of metal or fiber contamination in the fluid.

TORQUE CONVERTER (Continued)

IMPELLER

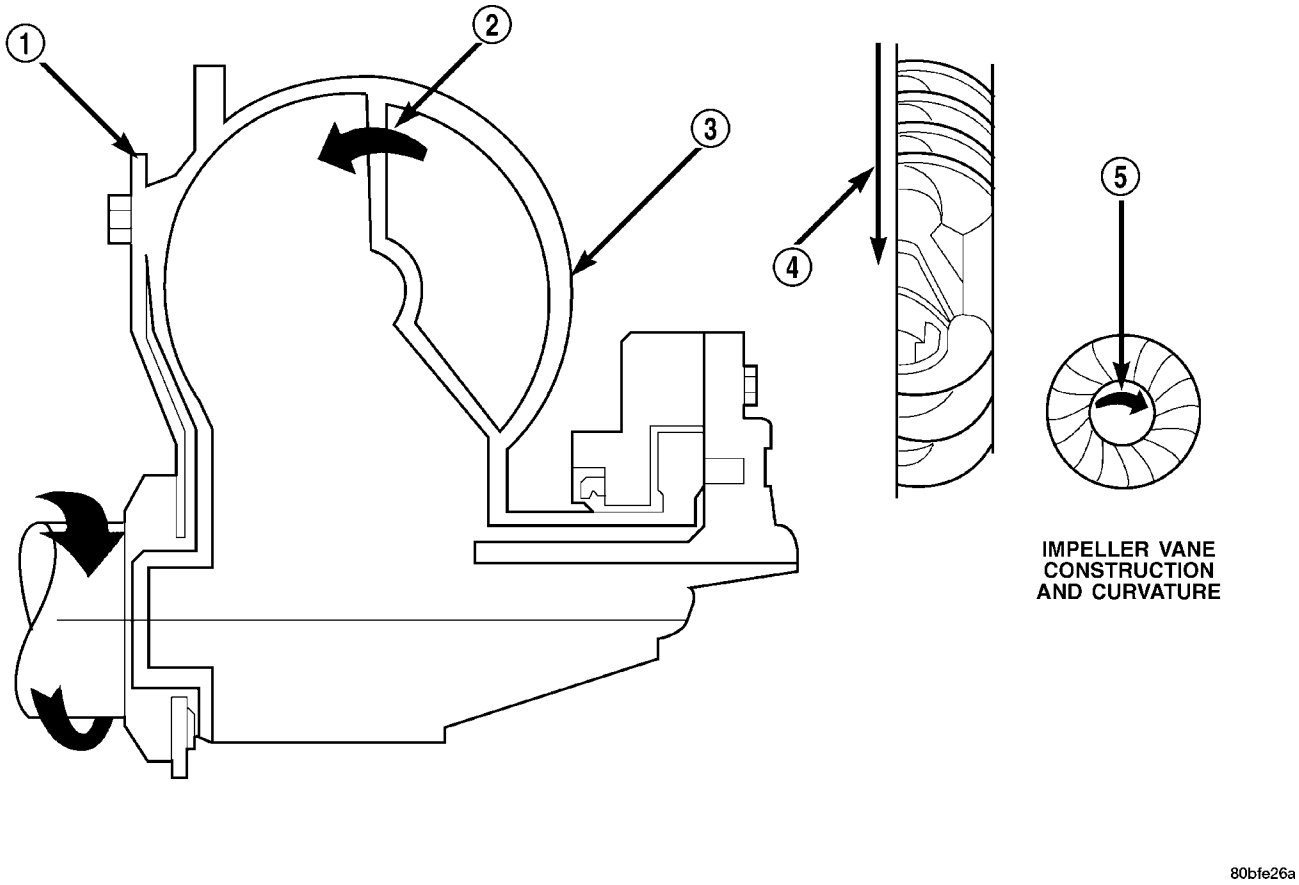

Fig. 137 Impeller

1 - ENGINE FLEXPLATE
2 - OIL FLOW FROM IMPELLER SECTION INTO TURBINE SECTION
3 - IMPELLER VANES AND COVER ARE INTEGRAL
4 - ENGINE ROTATION
5 - ENGINE ROTATION

The impeller (Fig. 137) is an integral part of the converter housing. The impeller consists of curved blades placed radially along the inside of the housing on the transmission side of the converter. As the converter housing is rotated by the engine, so is the impeller, because they are one and the same and are the driving members of the system.

TORQUE CONVERTER (Continued)

TURBINE

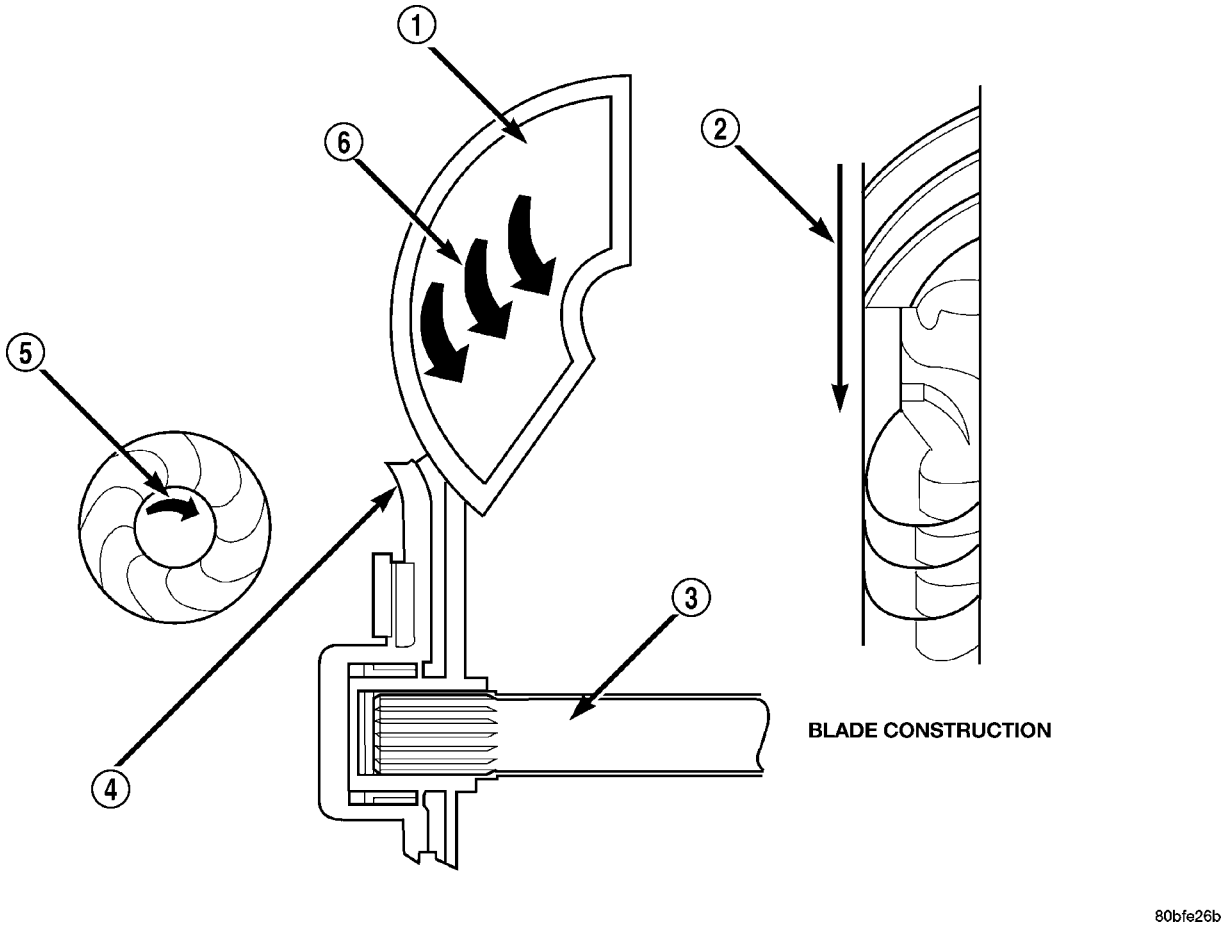

Fig. 138 Turbine

1 - TURBINE VANE
2 - ENGINE ROTATION
3 - INPUT SHAFT
4 - PORTION OF TORQUE CONVERTER COVER
5 - ENGINE ROTATION
6 - OIL FLOW WITHIN TURBINE SECTION

The turbine (Fig. 138) is the output, or driven, member of the converter. The turbine is mounted within the housing opposite the impeller, but is not attached to the housing. The input shaft is inserted through the center of the impeller and splined into the turbine. The design of the turbine is similar to the impeller, except the blades of the turbine are curved in the opposite direction.

TORQUE CONVERTER (Continued)

STATOR

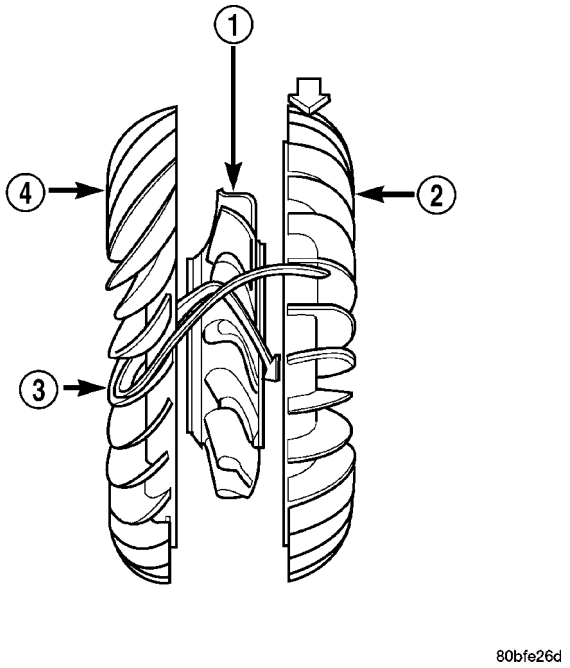

Fig. 139 Stator Location

1 - STATOR
2 - IMPELLER
3 - FLUID FLOW
4 - TURBINE

The stator assembly (Fig. 139) is mounted on a stationary shaft which is an integral part of the oil pump. The stator (1) is located between the impeller (2) and the turbine (4) within the torque converter case.

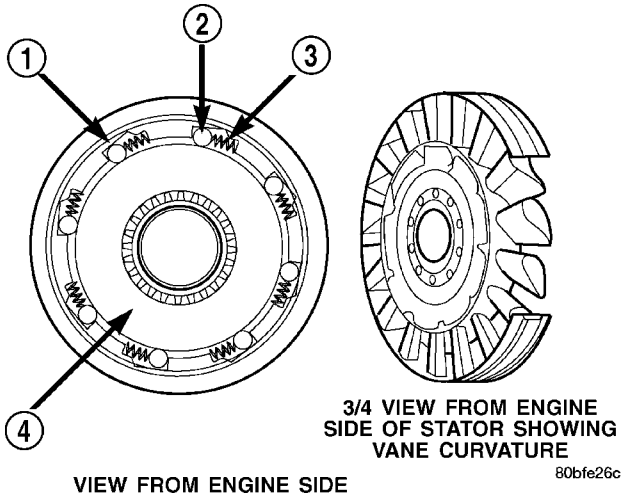

Fig. 140 Stator Components

1 - CAM (OUTER RACE)
2 - ROLLER
3 - SPRING
4 - INNER RACE

The stator contains an over-running clutch (1-4) (Fig. 140), which allows the stator to rotate only in a clockwise direction. When the stator is locked against the over-running clutch, the torque multiplication feature of the torque converter is operational.

TORQUE CONVERTER CLUTCH (TCC)

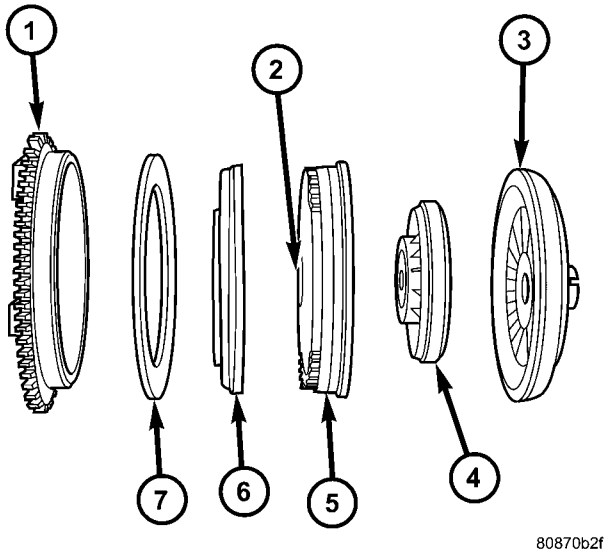

Fig. 141 Torque Converter Clutch (TCC)

1 - IMPELLER FRONT COVER
2 - THRUST WASHER ASSEMBLY
3 - IMPELLER
4 - STATOR
5 - TURBINE
6 - PISTON
7 - FRICTION DISC

The TCC (Fig. 141) was installed to improve the efficiency of the torque converter that is lost to the slippage of the fluid coupling. Although the fluid coupling provides smooth, shock-free power transfer, it is natural for all fluid couplings to slip. If the impeller (3) and turbine (5) were mechanically locked together, a zero slippage condition could be obtained. A hydraulic piston (6) with friction material (7) was added to the turbine assembly (5) to provide this mechanical lock-up.

In order to reduce heat build-up in the transmission and buffer the powertrain against torsional vibrations, the TCM can duty cycle the L/R-CC Solenoid to achieve a smooth application of the torque converter clutch. This function, referred to as Electronically Modulated Converter Clutch (EMCC) can occur at various times depending on the following variables:

- Shift lever position
- Current gear range
- Transmission fluid temperature
- Engine coolant temperature
- Input speed

TORQUE CONVERTER (Continued)

- Throttle angle
- Engine speed

OPERATION

The converter impeller (Fig. 142) (driving member), which is integral to the converter housing and bolted to the engine drive plate, rotates at engine speed. The converter turbine (driven member), which reacts from fluid pressure generated by the impeller, rotates and turns the transmission input shaft.

TURBINE

As the fluid that was put into motion by the impeller blades strikes the blades of the turbine, some of the energy and rotational force is transferred into the turbine and the input shaft. This causes both of them (turbine and input shaft) to rotate in a clockwise direction following the impeller. As the fluid is leaving the trailing edges of the turbine's blades it continues in a "hindering" direction back toward the impeller. If the fluid is not redirected before it strikes the impeller, it will strike the impeller in such a direction that it would tend to slow it down.

STATOR

Torque multiplication is achieved by locking the stator's over-running clutch to its shaft (Fig. 143). Under stall conditions (the turbine is stationary), the oil leaving the turbine blades strikes the face of the stator blades and tries to rotate them in a counter-clockwise direction. When this happens the over-running clutch of the stator locks and holds the stator from rotating. With the stator locked, the oil strikes the stator blades and is redirected into a "helping" direction before it enters the impeller. This circulation of oil from impeller to turbine, turbine to stator, and stator to impeller, can produce a maximum torque multiplication of about 2.4:1. As the turbine begins to match the speed of the impeller, the fluid that was hitting the stator in such as way as to cause it to lock-up is no longer doing so. In this condition of operation, the stator begins to free wheel and the converter acts as a fluid coupling.

TORQUE CONVERTER CLUTCH (TCC)

In a standard torque converter, the impeller and turbine are rotating at about the same speed and the stator is freewheeling, providing no torque multiplication. By applying the turbine's piston and friction material to the front cover, a total converter engagement can be obtained. The result of this engagement is a direct 1:1 mechanical link between the engine and the transmission.

The clutch can be engaged in second, third, fourth, and fifth gear ranges depending on overdrive control switch position. If the overdrive control switch is in

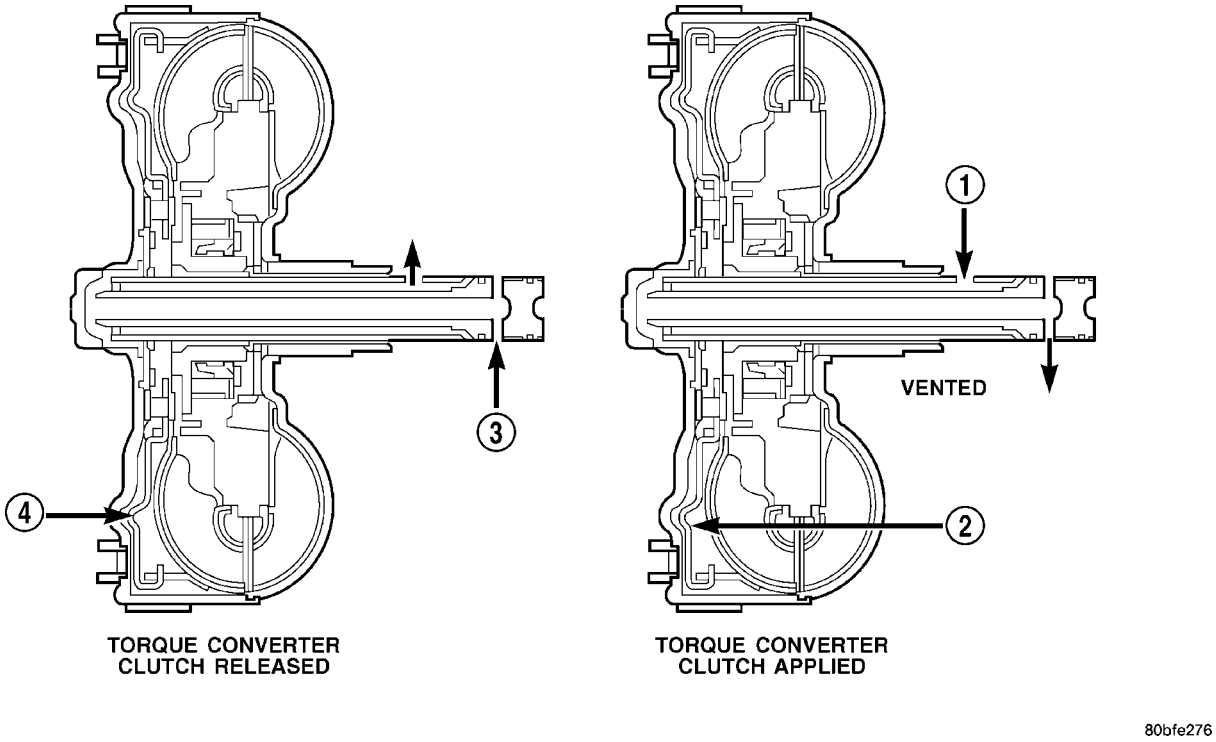

Fig. 142 Torque Converter Fluid Operation - Typical

1 - APPLY PRESSURE
2 - THE PISTON MOVES SLIGHTLY FORWARD
3 - RELEASE PRESSURE
4 - THE PISTON MOVES SLIGHTLY REARWARD

TORQUE CONVERTER (Continued)

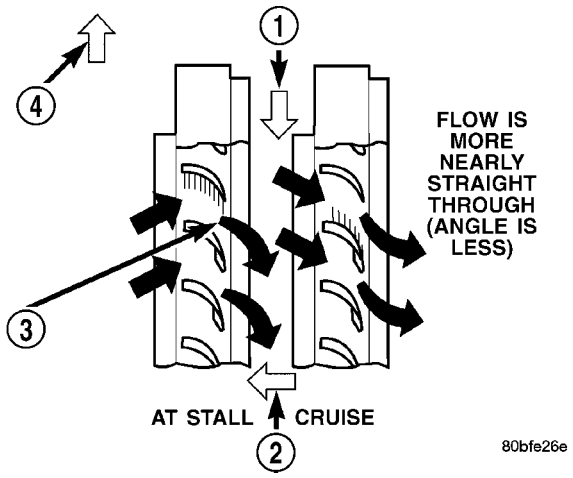

Fig. 143 Stator Operation

1 - DIRECTION STATOR WILL FREE WHEEL DUE TO OIL PUSHING ON BACKSIDE OF VANES
2 - FRONT OF ENGINE
3 - INCREASED ANGLE AS OIL STRIKES VANES
4 - DIRECTION STATOR IS LOCKED UP DUE TO OIL PUSHING AGAINST STATOR VANES

the normal ON position, the clutch will engage after the shift to fourth gear, and above approximately 72 km/h (45 mph). If the control switch is in the OFF position, the clutch will engage after the shift to third gear, at approximately 56 km/h (35 mph) at light throttle.

The TCM controls the torque converter by way of internal logic software. The programming of the software provides the TCM with control over the L/R-CC Solenoid. There are four output logic states that can be applied as follows:

- No EMCC
- Partial EMCC
- Full EMCC
- Gradual-to-no EMCC

NO EMCC

Under No EMCC conditions, the L/R Solenoid is OFF. There are several conditions that can result in NO EMCC operations. No EMCC can be initiated due to a fault in the transmission or because the TCM does not see the need for EMCC under current driving conditions.

PARTIAL EMCC

Partial EMCC operation modulates the L/R Solenoid (duty cycle) to obtain partial torque converter clutch application. Partial EMCC operation is maintained until Full EMCC is called for and actuated. During Partial EMCC some slip does occur. Partial EMCC will usually occur at low speeds, low load and light throttle situations.

FULL EMCC

During Full EMCC operation, the TCM increases the L/R Solenoid duty cycle to full ON after Partial EMCC control brings the engine speed within the desired slip range of transmission input speed relative to engine rpm.

GRADUAL-TO-NO EMCC

This operation is to soften the change from Full or Partial EMCC to No EMCC. This is done at mid-throttle by decreasing the L/R Solenoid duty cycle.

REMOVAL

(1) Remove transmission and torque converter from vehicle. (Refer to 21 - TRANSMISSION/AUTOMATIC - 45RFE/545RFE - REMOVAL)

(2) Place a suitable drain pan under the converter housing end of the transmission.

CAUTION: Verify that transmission is secure on the lifting device or work surface, the center of gravity of the transmission will shift when the torque converter is removed creating an unstable condition. The torque converter is a heavy unit. Use caution when separating the torque converter from the transmission.

(3) Pull the torque converter forward until the center hub clears the oil pump seal.

(4) Separate the torque converter from the transmission.

INSTALLATION

NOTE: Check converter hub and drive flats for sharp edges, burrs, scratches, or nicks. Polish the hub and flats with 320/400 grit paper or crocus cloth if necessary. Verify that the converter hub o-ring is properly installed and is free from debris. The hub must be smooth to avoid damaging the pump seal at installation.

(1) Lubricate oil pump seal lip with transmission fluid.

(2) Place torque converter in position on transmission.

CAUTION: Do not damage oil pump seal or converter hub o-ring while inserting torque converter into the front of the transmission.

(3) Align torque converter to oil pump seal opening.

(4) Insert torque converter hub into oil pump.

(5) While pushing torque converter inward, rotate converter until converter is fully seated in the oil pump gears.

TORQUE CONVERTER (Continued)

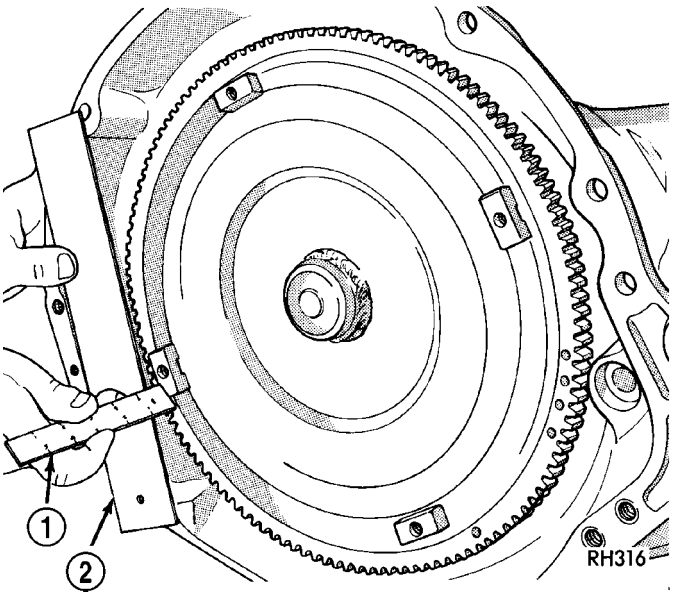

Fig. 144 Checking Torque Converter Seating-Typical

1 - SCALE
2 - STRAIGHTEDGE

(6) Check converter seating with a scale (1) and straightedge (2) (Fig. 144). Surface of converter lugs should be at least 13 mm (1/2 in.) to rear of straightedge when converter is fully seated.

(7) If necessary, temporarily secure converter with C-clamp attached to the converter housing.

(8) Install the transmission in the vehicle.

(9) Fill the transmission with the recommended fluid.

TRANSMISSION CONTROL RELAY

DESCRIPTION

The relay is supplied fused B+ voltage, energized by the TCM, and is used to supply power to the solenoid pack when the transmission is in normal operating mode.

OPERATION

When the relay is “off”, no power is supplied to the solenoid pack and the transmission is in “limp-in” mode. After a controller reset, the TCM energizes the relay. Prior to this, the TCM verifies that the contacts are open by checking for no voltage at the switched battery terminals. After this is verified, the voltage at the solenoid pack pressure switches is checked. After the relay is energized, the TCM monitors the terminals to verify that the voltage is greater than 3 volts.

TRANSMISSION RANGE SENSOR

DESCRIPTION

The Transmission Range Sensor (TRS) is part of the solenoid module, which is mounted to the top of the valve body inside the transmission.

The Transmission Range Sensor (TRS) has five switch contact pins that:

- Determine shift lever position
- Supply ground to the Starter Relay in Park and Neutral only.
- Supply +12 V to the backup lamps in Reverse only.

The TRS also has an integrated temperature sensor (thermistor) that communicates transmission temperature to the TCM and PCM.

OPERATION

The Transmission Range Sensor (TRS) communicates shift lever position to the TCM as a combination of open and closed switches. Each shift lever position has an assigned combination of switch states (open/closed) that the TCM receives from four sense circuits. The TCM interprets this information and determines the appropriate transmission gear position and shift schedule.

There are many possible combinations of open and closed switches (codes). Seven of these possible codes are related to gear position and five are recognized as “between gear” codes. This results in many codes which should **never occur**. These are called “invalid” codes. An invalid code will result in a DTC, and the TCM will then determine the shift lever position based on pressure switch data. This allows reasonably normal transmission operation with a TRS failure.

GEAR	C5	C4	C3	C2	C1
Park	CL	OP	OP	CL	CL
Temp 1	CL	OP	OP	CL	OP
Reverse	OP	OP	OP	CL	OP
Temp 2	OP	OP	CL	CL	OP
Neutral 1	OP	OP	CL	CL	CL
Neutral 2	OP	CL	CL	CL	CL
Temp 3	OP	CL	CL	CL	OP
Drive	OP	CL	CL	OP	OP
Temp 4	OP	CL	OP	OP	OP
Manual 2	CL	CL	OP	OP	OP
Temp 5	CL	OP	OP	OP	OP
Manual 1	CL	OP	CL	OP	OP

TRANSMISSION SOLENOID/ TRS ASSEMBLY

DESCRIPTION

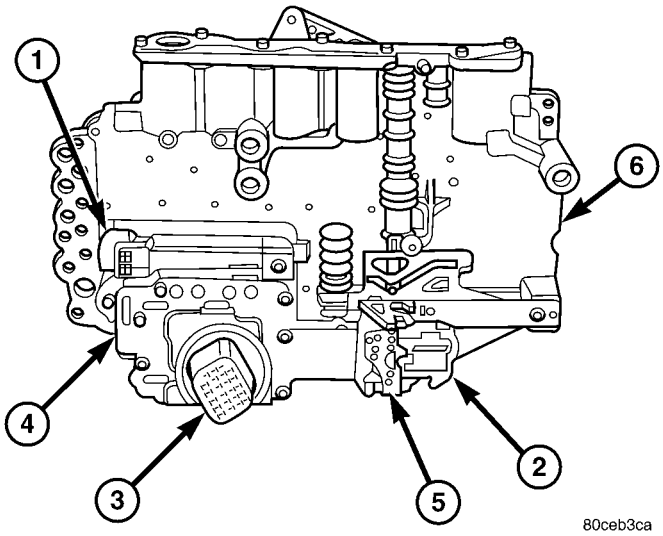

Fig. 145 Transmission Solenoid/TRS Assembly

1 - PRESSURE CONTROL SOLENOID
2 - TRANSMISSION RANGE SELECTOR PLATE
3 - 23-WAY CONNECTOR
4 - SOLENOID PACK
5 - TRANSMISSION RANGE SENSOR
6 - VALVE BODY

The transmission solenoid/TRS assembly is internal to the transmission and mounted on the valve body assembly (Fig. 145). The assembly consists of six solenoids that control hydraulic pressure to the six friction elements (transmission clutches), and the torque converter clutch. The pressure control solenoid is located on the side of the solenoid/TRS assembly. The solenoid/TRS assembly also contains five pressure switches that feed information to the TCM.

OPERATION

SOLENOIDS

Solenoids are used to control the L/R, 2C, 4C, OD, and UD friction elements. The reverse clutch is controlled by line pressure and the position of the manual valve in the valve body. All the solenoids are contained within the Solenoid and Pressure Switch Assembly. The solenoid and pressure switch assembly contains one additional solenoid, Multi-Select (MS), which serves primarily to provide 2nd and 3rd gear limp-in operation.

The solenoids receive electrical power from the Transmission Control Relay through a single wire. The TCM energizes or operates the solenoids individually by grounding the return wire of the solenoid as necessary. When a solenoid is energized, the solenoid valve shifts, and a fluid passage is opened or closed (vented or applied), depending on its default operating state. The result is an apply or release of a frictional element.

The MS and UD solenoids are normally applied to allow transmission limp-in in the event of an electrical failure.

The continuity of the solenoids and circuits are periodically tested. Each solenoid is turned on or off depending on its current state. An inductive spike should be detected by the TCM during this test. If no spike is detected, the circuit is tested again to verify the failure. In addition to the periodic testing, the solenoid circuits are tested if a speed ratio or pressure switch error occurs.

PRESSURE SWITCHES

The TCM relies on five pressure switches to monitor fluid pressure in the L/R, 2C, 4C, UD, and OD hydraulic circuits. The primary purpose of these switches is to help the TCM detect when clutch circuit hydraulic failures occur. The switches close at approximately 23 psi and open at approximately 11 psi, and simply indicate whether or not pressure exists. The switches are continuously monitored by the TCM for the correct states (open or closed) in each gear as shown in the following chart:

GEAR	L/R	2C	4C	UD	OD
R	OP	OP	OP	OP	OP
P/N	CL	OP	OP	OP	OP
1ST	CL*	OP	OP	CL	OP
2ND	OP	CL	OP	CL	OP
2ND PRIME	OP	OP	CL	CL	OP
D	OP	OP	OP	CL	CL
4TH	OP	OP	CL	OP	CL
5TH	OP	CL	OP	OP	CL

*L/R is closed if output speed is below 100 rpm in Drive and Manual 2. L/R is open in Manual 1.

A Diagnostic Trouble Code (DTC) will set if the TCM senses any switch open or closed at the wrong time in a given gear.

REMOVAL

(1) Remove the valve body from the transmission (Fig. 146). (Refer to 21 - TRANSMISSION/AUTOMATIC - 45RFE/545RFE/VALVE BODY - REMOVAL)

(2) Remove the bolts (1) holding the transmission solenoid/TRS assembly onto the valve body (Fig. 147).

TRANSMISSION SOLENOID/TRS ASSEMBLY (Continued)

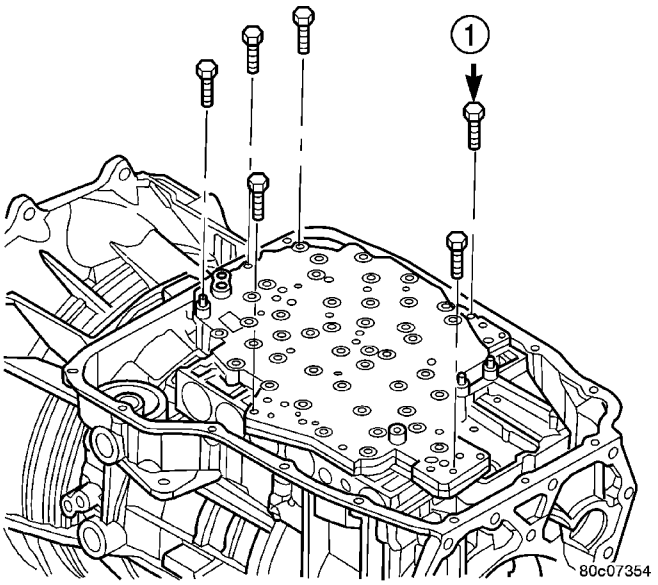

Fig. 146 Valve Body Bolts

1 - VALVE BODY TO CASE BOLT (6)

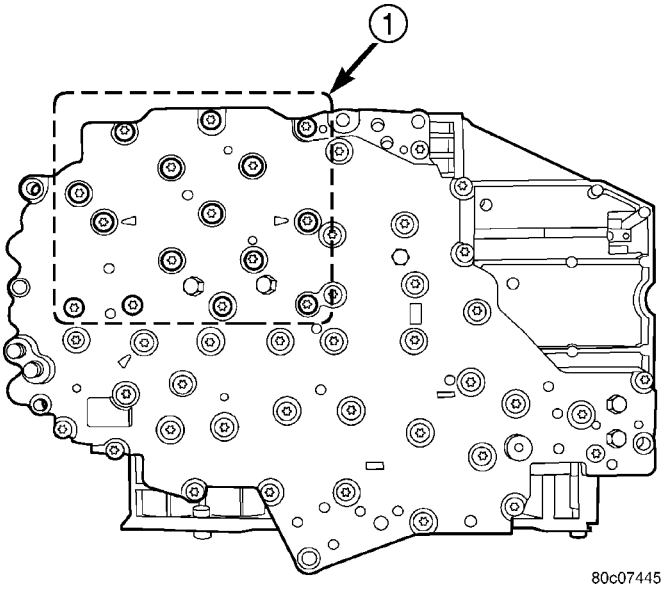

Fig. 147 Transmission Solenoid/TRS Assembly Screws

1 - SOLENOID PACK BOLTS (15)

(3) Separate the transmission solenoid/TRS assembly from the valve body.

INSTALLATION

(1) Place TRS selector plate in the PARK position.

(2) Position the transmission solenoid/TRS assembly onto the valve body. Be sure that both alignment dowels are fully seated in the valve body and that the TRS switch contacts are properly positioned in the selector plate

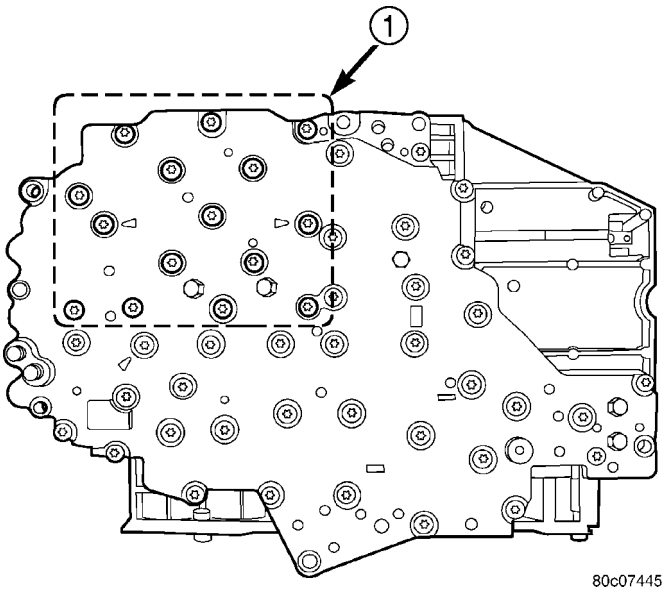

Fig. 148 Transmission Solenoid/TRS Assembly Screws

1 - SOLENOID PACK BOLTS (15)

(3) Install the bolts (1) (Fig. 148) to hold the transmission solenoid/TRS assembly onto the valve body.

(4) Tighten the solenoid assembly screws adjacent to the arrows cast into the bottom of the valve body first. Tighten the screws to 5.7 N·m (50 in.lbs.).

(5) Tighten the remainder of the solenoid assembly screws to 5.7 N·m (50 in.lbs.).

(6) Install the valve body into the transmission.

TRANSMISSION TEMPERATURE SENSOR

DESCRIPTION

The transmission temperature sensor is a thermistor that is integral to the Transmission Range Sensor (TRS).

OPERATION

The transmission temperature sensor is used by the TCM to sense the temperature of the fluid in the sump. Since fluid temperature can affect transmission shift quality and convertor lock up, the TCM requires this information to determine which shift schedule to operate in.

Calculated Temperature

A failure in the temperature sensor or circuit will result in calculated temperature being substituted for actual temperature. Calculated temperature is a predicted fluid temperature which is calculated from a combination of inputs:

- Battery (ambient) temperature

TRANSMISSION TEMPERATURE SENSOR (Continued)

- Engine coolant temperature
- In-gear run time since start-up

VALVE BODY

DESCRIPTION

The valve body consists of a cast aluminum valve body, a separator plate, and a transfer plate. The valve body contains valves and check balls that control fluid delivery to the torque converter clutch, bands, and frictional clutches. The valve body contains the following components (Fig. 149):

- Solenoid switch valve
- Manual valve
- Low/reverse switch valve
- 5 Accumulators
- 7 check balls (Fig. 150)

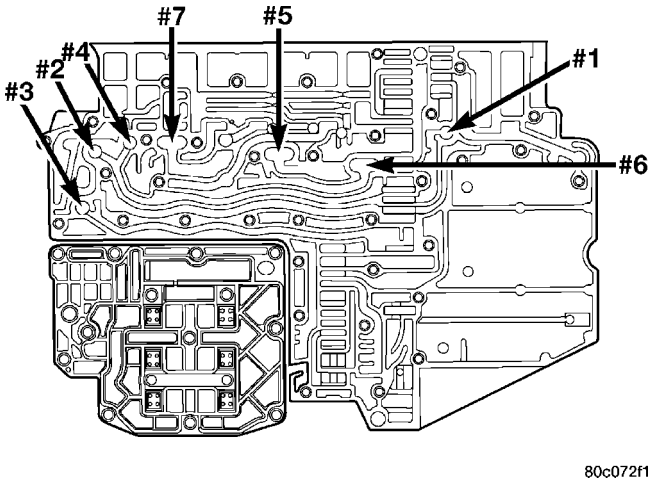

Fig. 150 Check Ball Locations

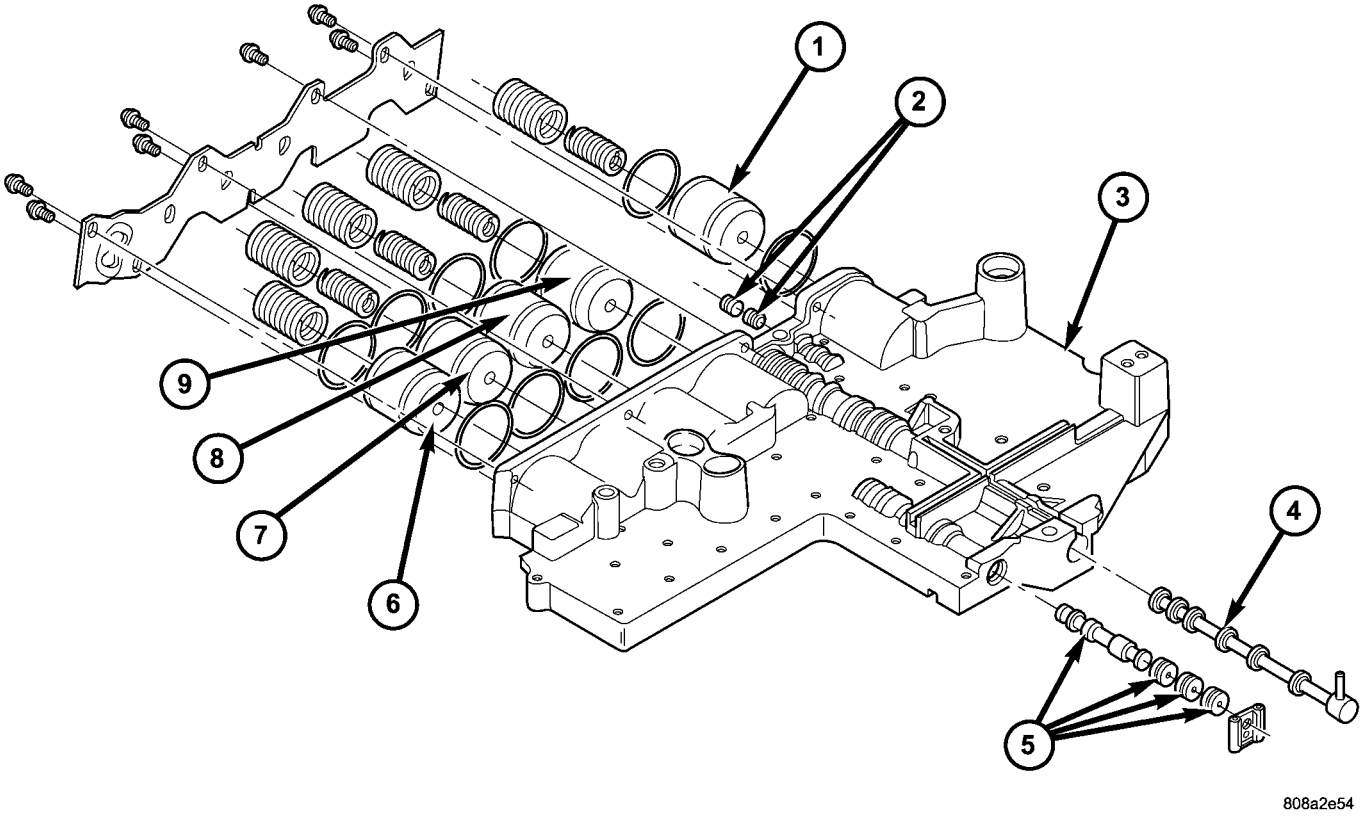

Fig. 149 Valve Body Components

1 - LOW/REVERSE ACCUMULATOR
2 - LOW/REVERSE SWITCH VALVE
3 - UPPER VALVE BODY
4 - MANUAL VALVE
5 - SOLENOID SWITCH VALVE
6 - OVERDRIVE ACCUMULATOR
7 - UNDERDRIVE ACCUMULATOR
8 - 4C ACCUMULATOR
9 - 2C ACCUMULATOR

VALVE BODY (Continued)

OPERATION

NOTE: Refer to the Hydraulic Schematics for a visual aid in determining valve location, operation and design.

SOLENOID SWITCH VALVE

The Solenoid Switch Valve (SSV) controls the direction of the transmission fluid when the L/R-TCC solenoid is energized.

The Solenoid Switch Valve controls line pressure from the LR-TCC solenoid. In 1st gear, the SSV will be in the downshifted position, thus directing fluid to the L/R clutch circuit. In 2nd, 3rd, 4th, and fifth gears, the solenoid switch valve will be in the upshifted position and directs the fluid into the torque converter clutch (TCC) circuit.

When shifting into 1st gear, a special hydraulic sequence is performed to ensure SSV movement into the downshifted position. The L/R pressure switch is monitored to confirm SSV movement. If the movement is not confirmed (the L/R pressure switch does not close), 2nd gear is substituted for 1st. A DTC will be set after three unsuccessful attempts are made to get into 1st gear in one given key start.

MANUAL VALVE

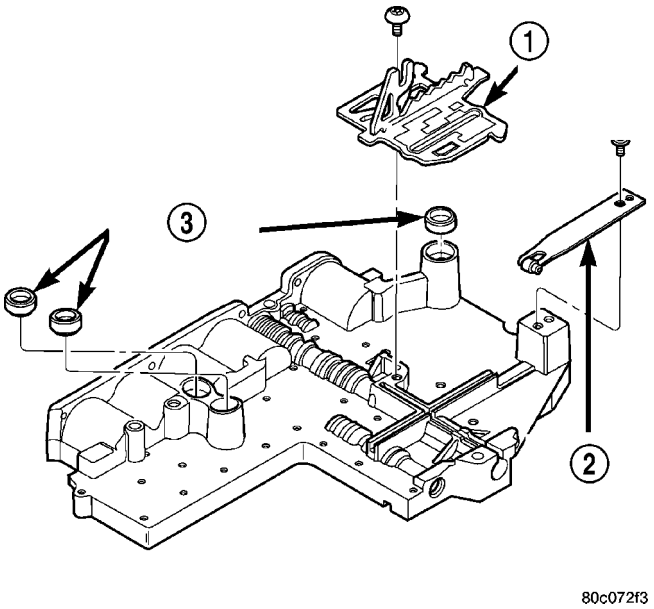

Fig. 151 TRS Selector Plate and Detent Spring

1 - TRS SELECTOR PLATE
2 - DETENT SPRING
3 - CLUTCH PASSAGE SEALS

The manual valve is a relay valve. The purpose of the manual valve is to direct fluid to the correct circuit needed for a specific gear or driving range. The manual valve, as the name implies, is manually operated by the driver with a lever located on the top of the valve body. The valve is connected mechanically by a cable to the gearshift mechanism. The valve is held in each of its positions by a roller detent spring (2) (Fig. 151) that engages the “roostercomb” of the TRS selector plate (1).

LOW/REVERSE SWITCH VALVE

The low/reverse switch valve allows the low/reverse clutch to be operated by either the LR/CC solenoid or the MS solenoid.

REMOVAL

NOTE: The valve body can be removed for service without having to remove the transmission assembly. The valve body can be disassembled for cleaning and inspection of the individual components. (Refer to 21 - TRANSMISSION/AUTOMATIC - 45RFE/ VALVE BODY - DISASSEMBLY)

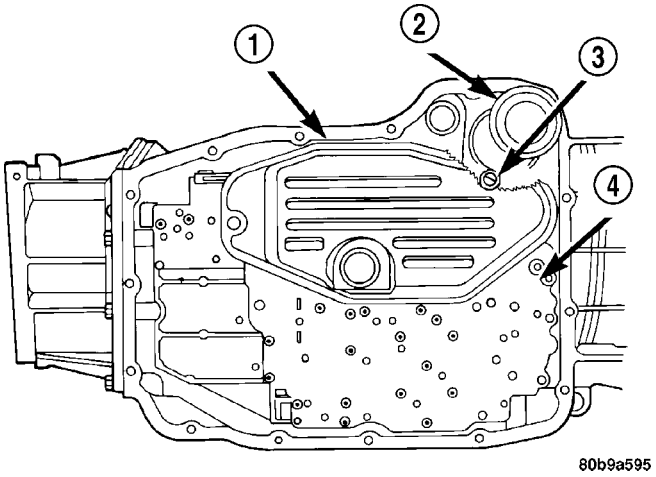

Fig. 152 Remove Primary Oil Filter

1 - PRIMARY OIL FILTER
2 - COOLER RETURN FILTER
3 - COOLER RETURN FILTER BYPASS VALVE
4 - VALVE BODY

(1) Shift transmission into PARK.

(2) Raise vehicle.

(3) Disconnect wires at the solenoid and pressure switch assembly connector.

(4) Position drain pan under transmission oil pan.

(5) Remove transmission oil pan.

(6) Remove the primary oil filter (1) from valve body. (Fig. 152)

VALVE BODY (Continued)

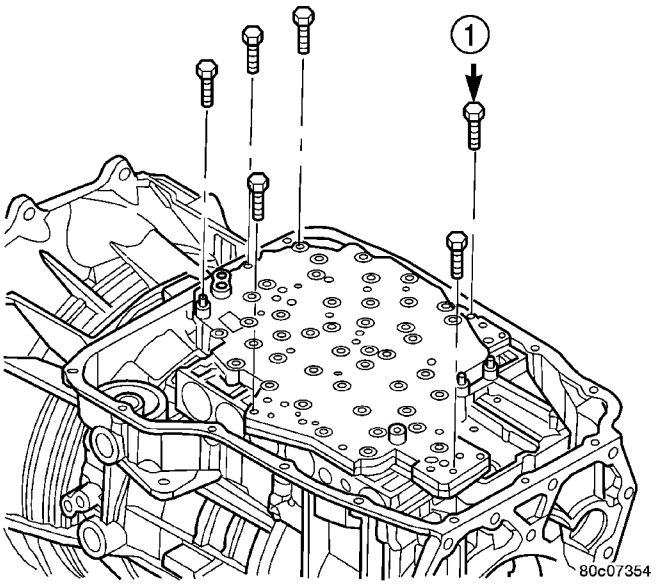

Fig. 153 Valve Body Bolts

1 - VALVE BODY TO CASE BOLT (6)

(7) Remove bolts (1) attaching valve body to transmission case. (Fig. 153)

(8) Lower the valve body and work the electrical connector out of transmission case.

(9) Separate the valve body from the transmission.

DISASSEMBLY

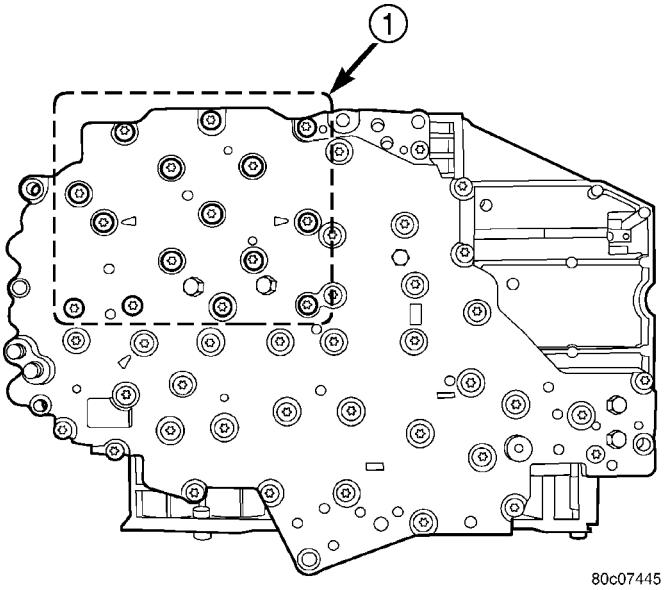

Fig. 154 Solenoid and Pressure Switch Assembly Screws

1 - SOLENOID PACK BOLTS (15)

(1) Remove the bolts (1) holding the solenoid and pressure switch assembly (Fig. 154) to the valve body. Do not remove the screws on the top of the solenoid and pressure switch assembly.

(2) Separate the solenoid and pressure switch assembly from the valve body.

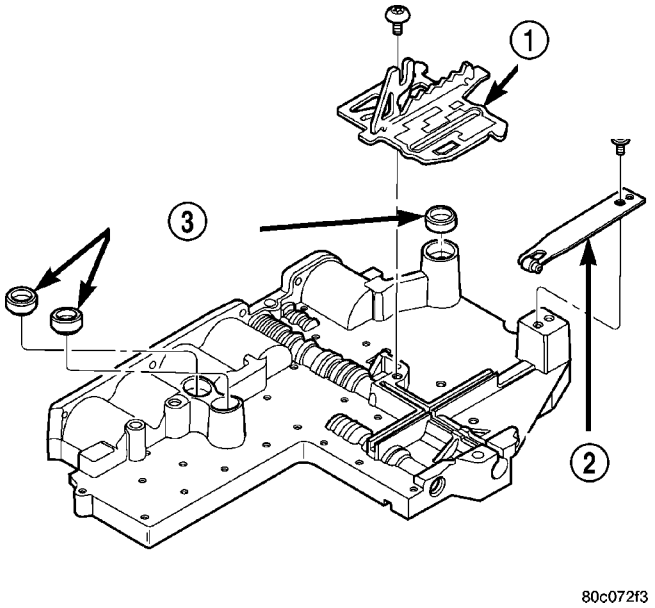

Fig. 155 Valve Body External Components

1 - TRS SELECTOR PLATE
2 - DETENT SPRING
3 - CLUTCH PASSAGE SEALS

(3) Remove the screw holding the detent spring (2) (Fig. 155) onto the valve body.

(4) Remove the detent spring (2) from the valve body.

(5) Remove the TRS selector plate (1) from the valve body and the manual valve.

(6) Remove the clutch passage seals (3) from the valve body, if necessary.

(7) Remove the screws holding the accumulator cover onto the valve body (Fig. 156).

(8) Remove the accumulator springs and pistons (1, 6-9) from the valve body. Note which accumulator piston and spring belong in each location.

(9) Place the valve body on the bench with the transfer plate upward.

NOTE: The valve body contains seven check balls. The transfer plate must be placed upward to prevent losing the check balls when the transfer plate is removed from the valve body.

(10) Remove the screws holding the valve body to the valve body transfer plate.

(11) Remove the transfer plate from the valve body. Note the location of all check balls (Fig. 157).

(12) Remove the check balls from the valve body.

VALVE BODY (Continued)

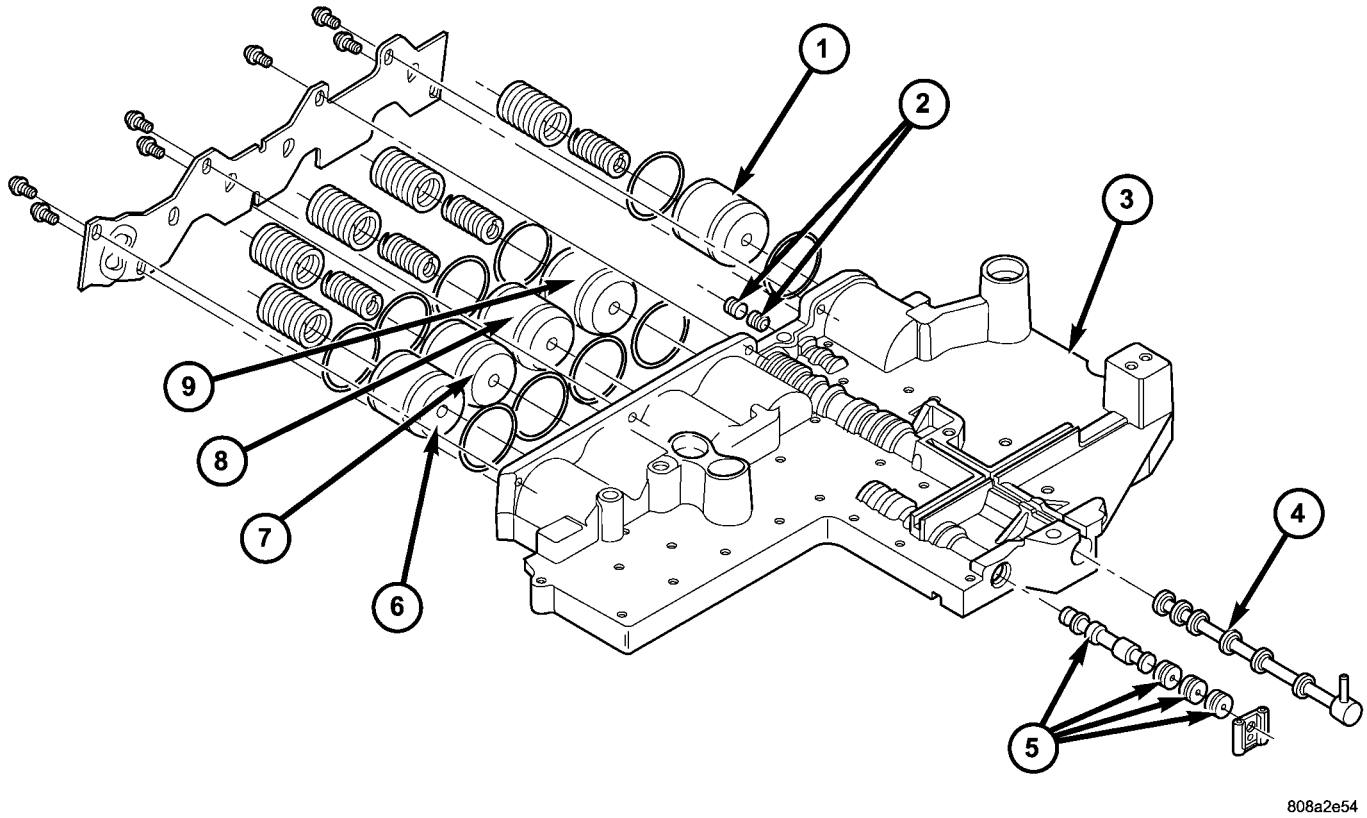

Fig. 156 Valve Body Components

1 - LOW/REVERSE ACCUMULATOR
2 - LOW/REVERSE SWITCH VALVE
3 - UPPER VALVE BODY
4 - MANUAL VALVE
5 - SOLENOID SWITCH VALVE
6 - OVERDRIVE ACCUMULATOR
7 - UNDERDRIVE ACCUMULATOR
8 - 4C ACCUMULATOR
9 - 2C ACCUMULATOR

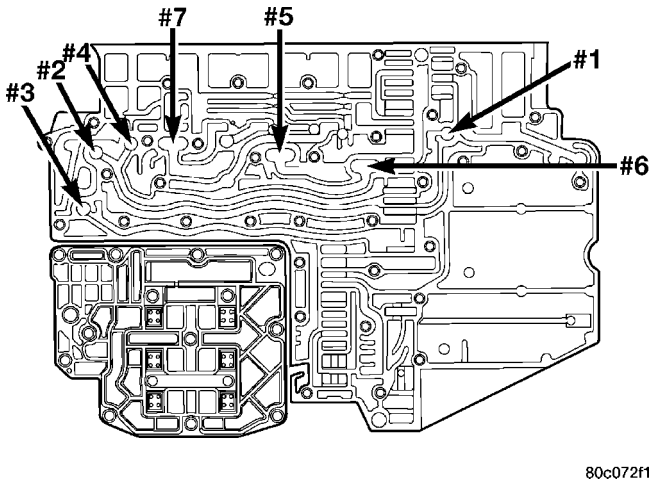

Fig. 157 Check Ball Locations

(13) Remove the retainers securing the solenoid switch valve (1), manual valve (2), and the low/reverse switch valve (3) from the valve body and remove the associated valve and spring. Tag each valve and spring combination with location information to aid in assembly. (Fig. 158)

VALVE BODY (Continued)

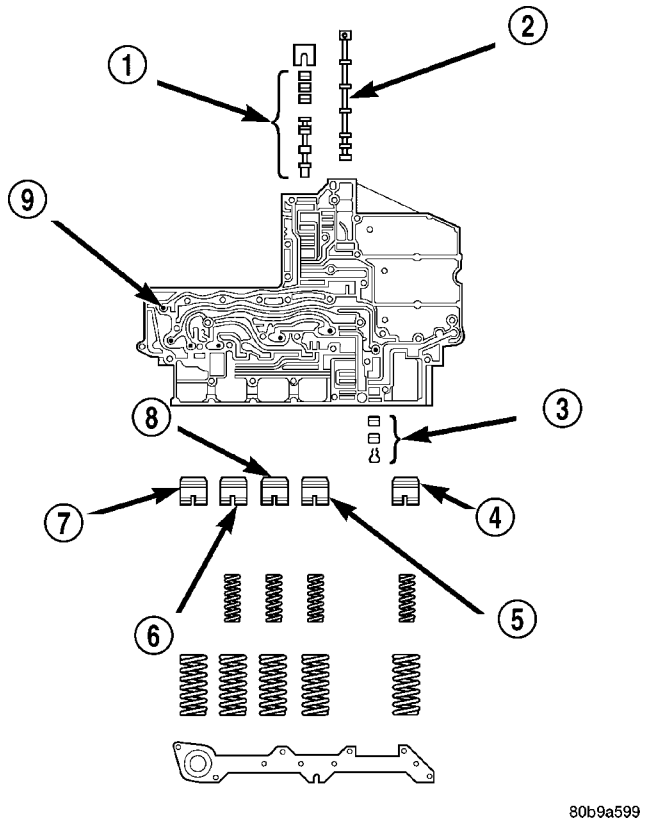

Fig. 158 Valve Body Components

1 - SOLENOID SWITCH VALVE
2 - MANUAL VALVE
3 - LOW REVERSE SWITCH VALVE
4 - LOW REVERSE ACCUMULATOR
5 - 2ND CLUTCH ACCUMULATOR
6 - UNDERDRIVE ACCUMULATOR
7 - OVERDRIVE ACCUMULATOR
8 - 4TH CLUTCH ACCUMULATOR
9 - CHECK BALLS (7)

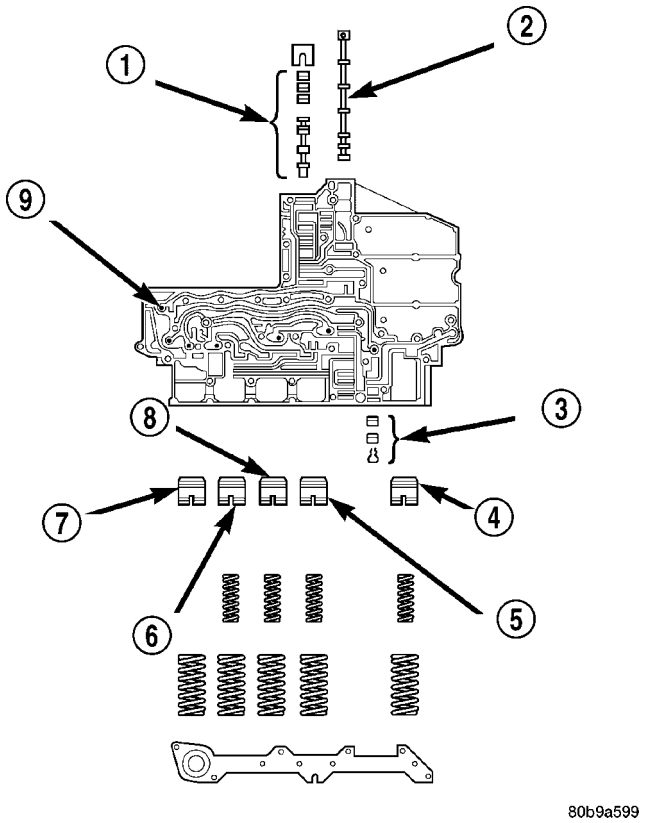

Fig. 159 Valve Body Components

1 - SOLENOID SWITCH VALVE
2 - MANUAL VALVE
3 - LOW REVERSE SWITCH VALVE
4 - LOW REVERSE ACCUMULATOR
5 - 2ND CLUTCH ACCUMULATOR
6 - UNDERDRIVE ACCUMULATOR
7 - OVERDRIVE ACCUMULATOR
8 - 4TH CLUTCH ACCUMULATOR
9 - CHECK BALLS (7)

CLEANING

Clean the valve housings, valves, plugs, springs, and separator plates with a standard parts cleaning solution only. Do not use gasoline, kerosene, or any type of caustic solution. (Fig. 159)

Do not immerse any of the electrical components in cleaning solution. Clean the electrical components by wiping them off with dry shop towels only.

Dry all except the electrical parts with compressed air. Make sure all passages are clean and free from obstructions. **Do not use rags or shop towels to dry or wipe off valve body components. Lint from these materials can stick to valve body parts, interfere with valve operation, and clog filters and fluid passages.**

INSPECTION

Inspect all of the valve body mating surfaces for scratches, nicks, burrs, or distortion. Use a straight-edge to check surface flatness. Minor scratches may be removed with crocus cloth using only very light pressure.

Minor distortion of a valve body mating surface may be corrected by smoothing the surface with a sheet of crocus cloth. Position the crocus cloth on a surface plate, sheet of plate glass or equally flat surface. If distortion is severe or any surfaces are heavily scored, the valve body will have to be replaced.

VALVE BODY (Continued)

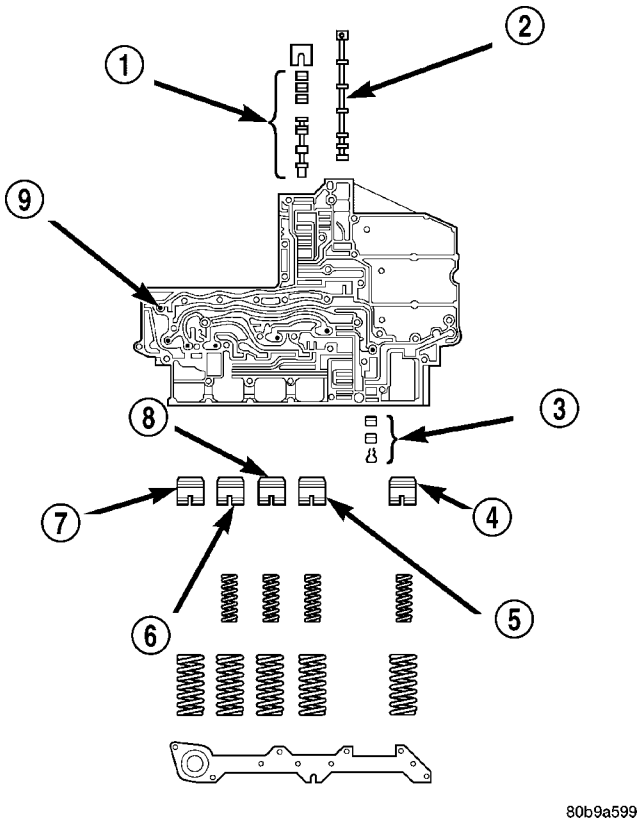

Fig. 160 Valve Body Components

1 - SOLENOID SWITCH VALVE
2 - MANUAL VALVE
3 - LOW REVERSE SWITCH VALVE
4 - LOW REVERSE ACCUMULATOR
5 - 2ND CLUTCH ACCUMULATOR
6 - UNDERDRIVE ACCUMULATOR
7 - OVERDRIVE ACCUMULATOR
8 - 4TH CLUTCH ACCUMULATOR
9 - CHECK BALLS (7)

Inspect the valves and plugs (Fig. 160) for scratches, burrs, nicks, or scores. Minor surface scratches on steel valves and plugs can be removed with crocus cloth but **do not round off the edges of the valve or plug lands.** Maintaining sharpness of these edges is vitally important. The edges prevent foreign matter from lodging between the valves and plugs and the bore.

Inspect all the valve and plug bores in the valve body. Use a penlight to view the bore interiors. Replace the valve body if any bores are distorted or scored. Inspect all of the valve body springs. The springs must be free of distortion, warpage or broken coils.

Trial fit each valve and plug in its bore to check freedom of operation. When clean and dry, the valves and plugs should drop freely into the bores.

Valve body bores do not change dimensionally with use. If the valve body functioned correctly when new, it will continue to operate properly after cleaning and inspection. It should not be necessary to replace a valve body assembly unless it is damaged in handling.

Inspect all the accumulator bores in the valve body. Use a penlight to view the bore interiors. Replace the valve body if any bores are distorted or scored. Inspect all of the accumulator springs. The springs must be free of distortion, warpage or broken coils.

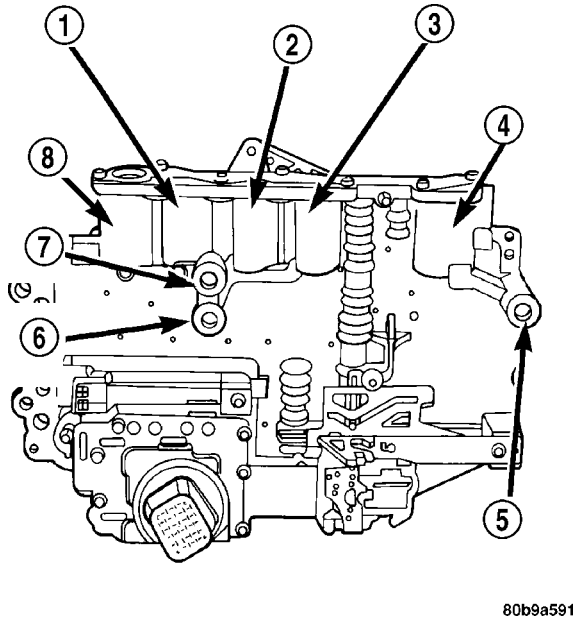

Fig. 161 Valve Body Seals

1 - UNDERDRIVE ACCUMULATOR (2 SPRINGS)
2 - 4TH CLUTCH ACCUMULATOR (2 SPRINGS)
3 - 2ND CLUTCH ACCUMULATOR (2 SPRINGS)
4 - LOW REVERSE ACCUMULATOR (2 SPRINGS)
5 - LOW/REVERSE PASSAGE SEAL
6 - 2ND CLUTCH PASSAGE SEAL
7 - 4TH CLUTCH PASSAGE SEAL
8 - OVERDRIVE ACCUMULATOR (1 SPRING)

Inspect all the fluid seals (Fig. 161) on the valve body. Replace any seals that are cracked, distorted, or damaged in any way. These seals pass fluid pressure directly to the clutches. Any pressure leak at these points, may cause transmission performance problems.

VALVE BODY (Continued)

ASSEMBLY

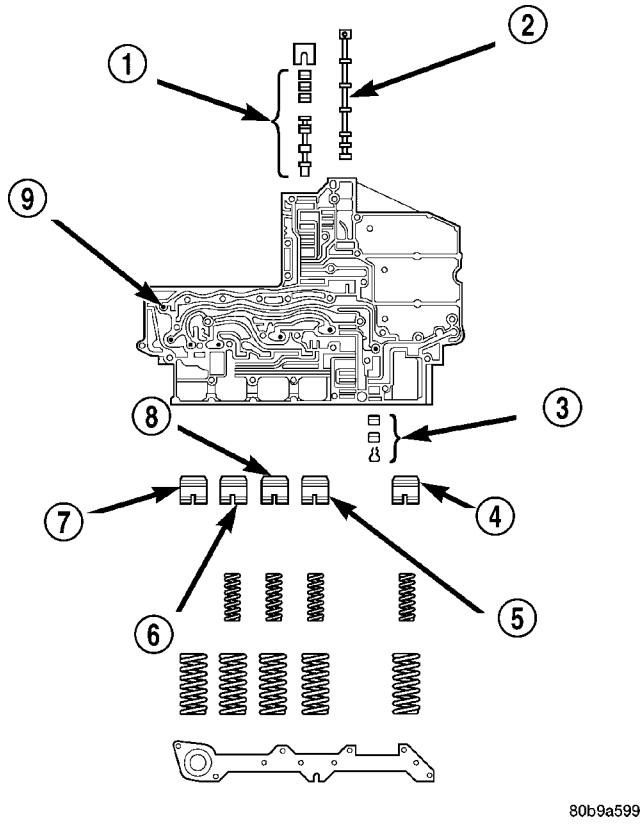

Fig. 162 Valve Body Components

1 - SOLENOID SWITCH VALVE
2 - MANUAL VALVE
3 - LOW REVERSE SWITCH VALVE
4 - LOW REVERSE ACCUMULATOR
5 - 2ND CLUTCH ACCUMULATOR
6 - UNDERDRIVE ACCUMULATOR
7 - OVERDRIVE ACCUMULATOR
8 - 4TH CLUTCH ACCUMULATOR
9 - CHECK BALLS (7)

(1) Lubricate valves, springs, and the housing valve bores with clean transmission fluid.

(2) Install solenoid switch valve (1) (Fig. 162), manual valve (2), and the low/reverse switch valve (3) into the valve body.

(3) Install the retainers to hold each valve into the valve body.

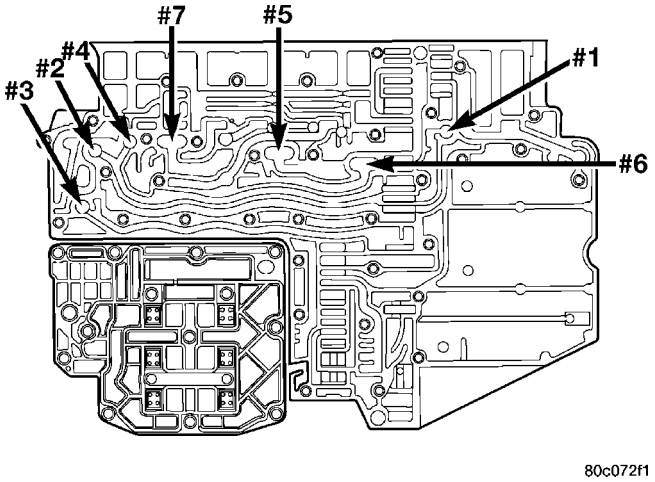

Fig. 163 Check Ball Locations

(4) Install the valve body check balls (Fig. 163) into their proper locations.

(5) Position the transfer plate onto the valve body.

(6) Install the screws to hold the transfer plate to the valve body. Tighten the screws to 5.6 N·m (50 in. lbs.).

(7) Install the accumulator pistons (1, 6-9) and springs (Fig. 164) into the valve body in the location from which they were removed. Note that all accumulators except the overdrive have two springs. The overdrive accumulator piston (6) has only one spring.

(8) Position the accumulator cover onto the valve body.

(9) Install the screws to hold the accumulator cover onto the valve body. Tighten the screws to 7 N·m (60 in. lbs.).

VALVE BODY (Continued)

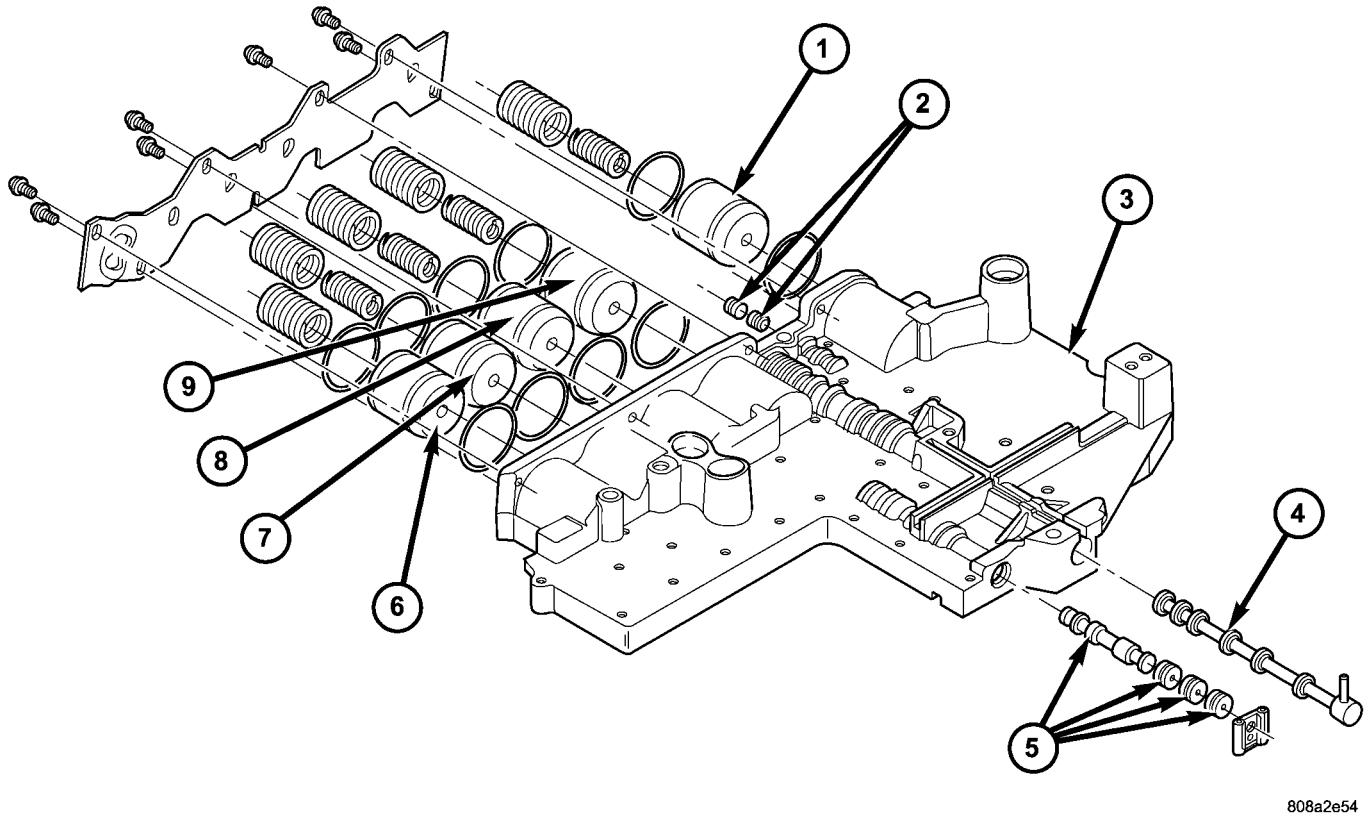

Fig. 164 Valve Body Components

1 - LOW/REVERSE ACCUMULATOR
2 - LOW/REVERSE SWITCH VALVE
3 - UPPER VALVE BODY
4 - MANUAL VALVE
5 - SOLENOID SWITCH VALVE
6 - OVERDRIVE ACCUMULATOR
7 - UNDERDRIVE ACCUMULATOR
8 - 4C ACCUMULATOR
9 - 2C ACCUMULATOR

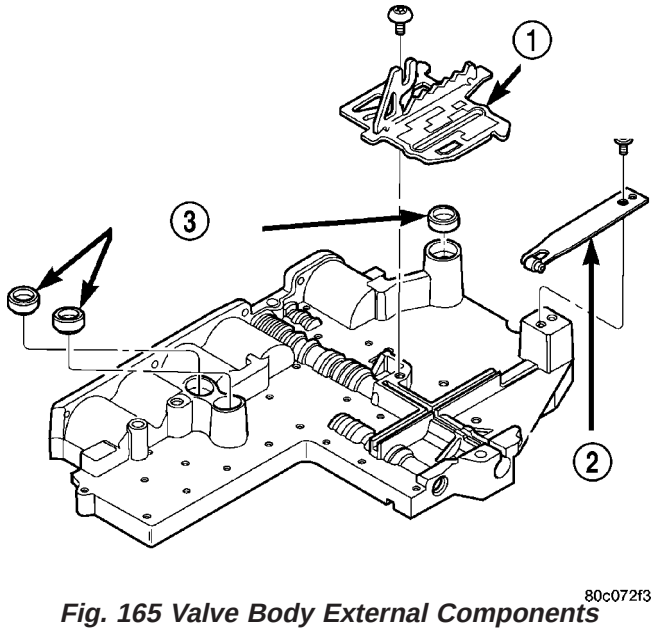

Fig. 165 Valve Body External Components

1 - TRS SELECTOR PLATE
2 - DETENT SPRING
3 - CLUTCH PASSAGE SEALS

(10) Install the TRS selector plate (1) (Fig. 165) onto the valve body and the manual valve.

(11) Position the detent spring (2) onto the valve body.

(12) Install the screw to hold the detent spring (2) onto the valve body. Tighten the screw to 4.5 N·m (40 in. lbs.).

(13) Install new clutch passage seals (3) onto the valve body, if necessary.

VALVE BODY (Continued)

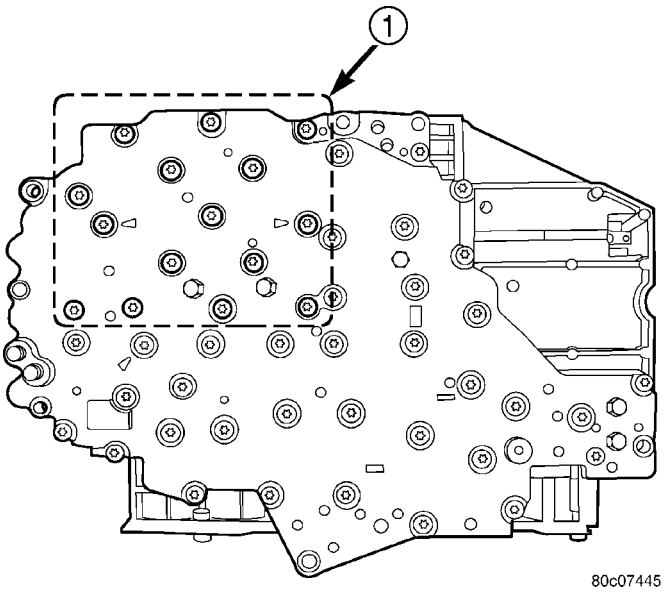

Fig. 166 Solenoid and Pressure Switch Assembly Screws

1 - SOLENOID PACK BOLTS (15)

(14) Install the solenoid and pressure switch assembly onto the valve body.

(15) Install the bolts (1) (Fig. 166) to hold the solenoid and pressure switch assembly onto the valve body. Tighten the bolts to 5.7 N·m (50 in. lbs.). Tighten the bolts adjacent to the arrows cast into the bottom of the transfer plate first.

INSTALLATION

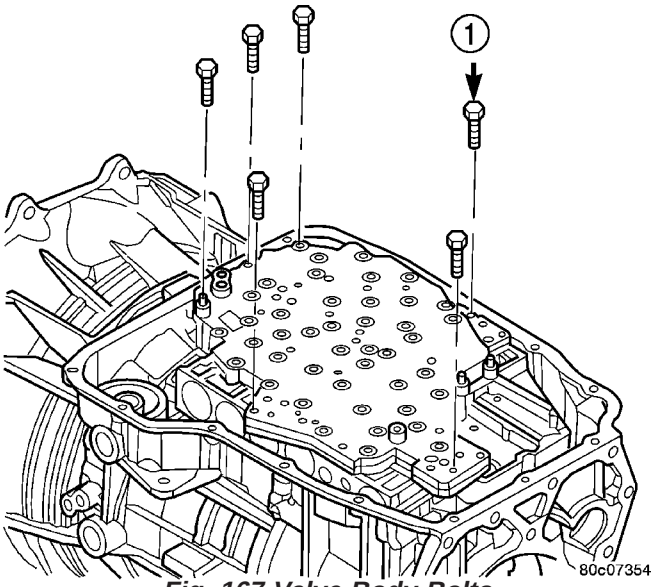

Fig. 167 Valve Body Bolts

1 - VALVE BODY TO CASE BOLT (6)

(1) Check condition of seals on valve body and the solenoid and pressure switch assembly. Replace seals if cut or worn.

(2) Place TRS selector plate in the PARK position.

(3) Place the transmission in the PARK position.

(4) Lubricate seal on the solenoid and pressure switch assembly connector with petroleum jelly.

(5) Position valve body in transmission (Fig. 167) and align the manual lever on the valve body to the pin on the transmission manual shift lever.

(6) Seat valve body in case and install one or two bolts to hold valve body in place.

(7) Tighten valve body bolts alternately and evenly to 12 N·m (105 in. lbs.) torque.

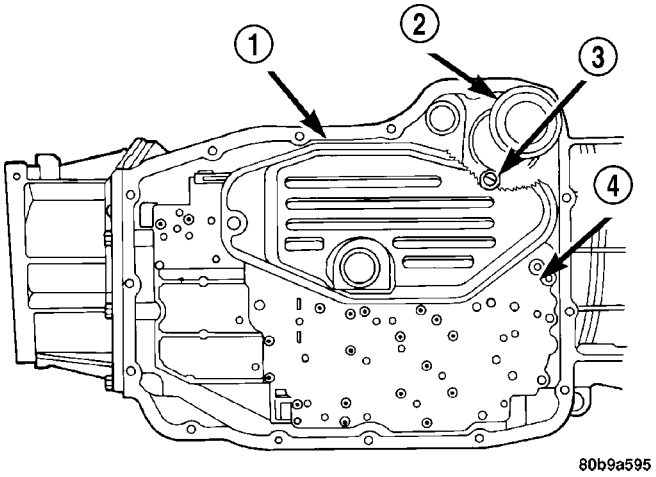

Fig. 168 Remove Primary Oil Filter

1 - PRIMARY OIL FILTER
2 - COOLER RETURN FILTER
3 - COOLER RETURN FILTER BYPASS VALVE
4 - VALVE BODY

CAUTION: The primary oil filter seal MUST be fully installed flush against the oil pump body. DO NOT install the seal onto the filter neck and attempt to install the filter and seal as an assembly. Damage to the transmission will result.

(8) Install a new primary oil filter seal in the oil pump inlet bore. Seat the seal in the bore with the butt end of a hammer, or other suitable tool.

(9) Place replacement filter (1) (Fig. 168) in position on valve body and into the oil pump.

(10) Install screw to hold filter to valve body. Tighten screw to 4.5 N·m (40 in. lbs.) torque.

(11) Connect the solenoid and pressure switch assembly connector.

(12) Install oil pan. Tighten pan bolts to 12 N·m (105 in. lbs.) torque.

(13) Lower vehicle and fill transmission with Mopar® ATF +4.

(14) Check and adjust gearshift cable, if necessary.

TRANSFER CASE - NV231

TABLE OF CONTENTS

page

TRANSFER CASE - NV231
DESCRIPTION 282
OPERATION 283
DIAGNOSIS AND TESTING - TRANSFER CASE - NV231 283
REMOVAL 284
DISASSEMBLY 285
CLEANING 293
INSPECTION 293
ASSEMBLY 297
INSTALLATION 307
SPECIFICATIONS TRANSFER CASE - NV231 307
SPECIAL TOOLS TRANSFER CASE - NV231 308
FLUID
STANDARD PROCEDURE - FLUID DRAIN AND FILL 310

page

FRONT OUTPUT SHAFT SEAL
REMOVAL 310
INSTALLATION 310
POSITION SENSOR
DESCRIPTION 310
OPERATION 311
REMOVAL 311
INSTALLATION 312
REAR OUTPUT SHAFT SEAL
REMOVAL 312
INSTALLATION 313
SHIFT LEVER
REMOVAL 314
INSTALLATION 314

TRANSFER CASE - NV231

DESCRIPTION

The NV231 is a part-time transfer case with a low range reduction gear system. The NV231 has three operating ranges plus a NEUTRAL position. A low range system provides a reduction ratio for increased low speed torque capability.

The geartrain is mounted in two aluminum case halves attached with bolts. The mainshaft front and rear bearings are mounted in aluminum retainer housings bolted to the case halves.

OPERATING RANGES

Transfer case operating ranges are:

- 2WD (2-wheel drive)
- 4Hi (4-wheel drive)
- 4 Lo (4-wheel drive low range)

The 2WD range is for use on any road surface at any time.

The 4Hi and 4 Lo ranges are for off road use only. They are not for use on hard surface roads. The only exception being when the road surface is wet or slippery or covered by ice and snow.

The low range reduction gear system is operative in 4 Lo range only. This range is for extra pulling power in off road situations. Low range reduction ratio is 2.72:1.

SHIFT MECHANISM

Operating ranges are selected with a floor mounted shift lever. The shift lever is connected to the transfer case range lever by a shift cable. A straight line shift pattern is used. Range positions are marked on the shifter knob bezel.

TRANSFER CASE - NV231 (Continued)

IDENTIFICATION

A circular ID tag is attached to the rear case of each transfer case (Fig. 1). The ID tag provides the transfer case model number, assembly number, serial number, and low range ratio.

The transfer case serial number also represents the date of build.

OPERATION

The input gear is splined to the transmission output shaft. The input gear drives the mainshaft through the planetary assembly and range hub. The front output shaft is operated by a drive chain that connects the shaft to a drive sprocket on the mainshaft. The drive sprocket is engaged/disengaged by the mode fork, which operates the mode sleeve and hub. The sleeve and hub are not equipped with a synchronizer mechanism for shifting.

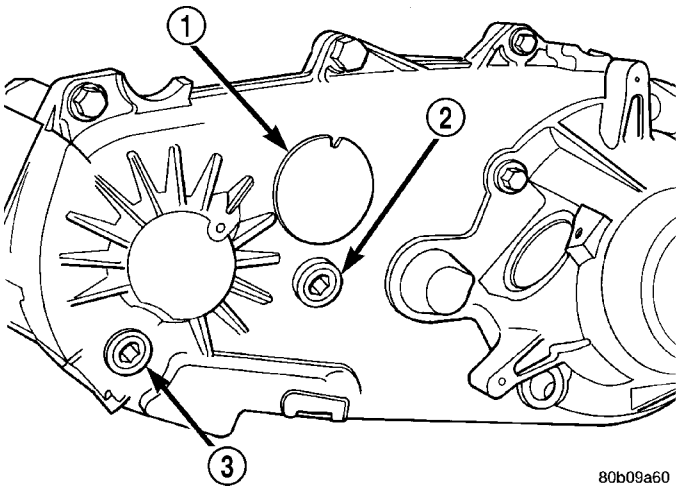

Fig. 1 Fill/Drain Plug And I.D. Tag Locations - Typical

1 - I.D. TAG
2 - FILL PLUG
3 - DRAIN PLUG

DIAGNOSIS AND TESTING - TRANSFER CASE - NV231

DIAGNOSIS CHART

Condition	Possible Cause	Correction
Transfer case difficult to shift or will not shift into desired range.	1) Vehicle speed too great to permit shifting.	1) Slow vehicle and shift into desired range.
	2) If vehicle was operated for an extended period in 4H mode on dry surface, driveline torque load may cause difficulty.	2) Stop vehicle and shift transfer case to Neutral position. Transfer case can then be shifted to the desired mode.
	3) Transfer case shift cable binding.	3) Repair or replace cable as necessary.
	4) Insufficient or incorrect lubricant.	4) Drain and refill transfer case with the correct type and quantity of lubricant.
	5) Internal transfer case components binding, worn, or damaged.	5) Repair or replace components as necessary.
Transfer case noisy in all drive modes.	1) Insufficient or incorrect lubricant.	1) Drain and refill transfer case with the correct type and quantity of lubricant.

TRANSFER CASE - NV231 (Continued)

Condition	Possible Cause	Correction
Transfer case noisy while in, or jumps out of, 4L mode.	1) Transfer case not completely engaged in 4L position.	1) Slow vehicle, shift transfer case to the Neutral position, and then shift into the 4L mode.
	2) Transfer case shifter binding.	2) Repair, replace, or tighten shifter as necessary.
	3) Range fork damaged, inserts worn, or fork is binding on the shift rail.	3) Repair or replace components as necessary.
	4) Low range gear worn or damaged.	4) Repair or replace components as necessary.
Lubricant leaking from transfer case seals or vent.	1) Transfer case overfilled.	1) Drain lubricant to the correct level.
	2) Transfer case vent closed or restricted.	2) Clean or replace vent as necessary.
	3) Transfer case seals damaged or installed incorrectly.	3) Replace suspect seal.
Abnormal tire wear.	1) Extended operation in 4Hi mode on dry surfaces,	1) Operate vehicle in 2H mode on dry surfaces.

REMOVAL

(1) Shift transfer case into NEUTRAL.
(2) Raise vehicle.
(3) Remove skid plate (Fig. 2).
(4) Drain transfer case lubricant.
(5) Mark front and rear propeller shaft yokes for alignment reference.
(6) Disconnect front/rear propeller shafts at transfer case.
(7) Disconnect transfer case position sensor connector (Fig. 3).
(8) Disconnect transfer case shift cable at the range lever (Fig. 4).
(9) Disconnect the transfer case shift cable from the shift cable bracket.

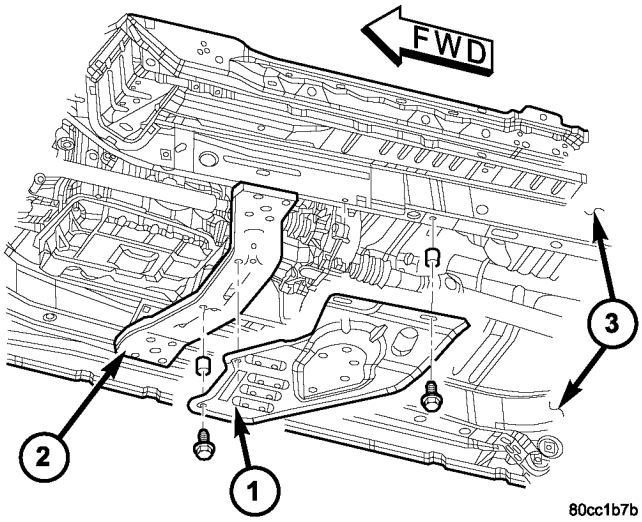

Fig. 2 Remove Skid Plate

1 - SKID PLATE
2 - TRANSMISSION CROSSMEMBER
3 - FRAME RAILS

TRANSFER CASE - NV231 (Continued)

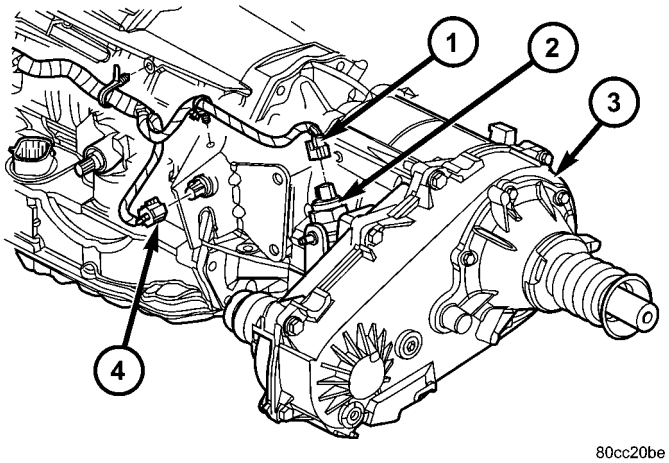

Fig. 3 Transfer Case Position Sensor and Connector

1 - TRANSFER CASE POSITION SENSOR CONNECTOR
2 - TRANSFER CASE POSITION SENSOR
3 - TRANSFER CASE
4 - OUTPUT SPEED SENSOR CONNECTOR

(10) Disconnect transfer case vent hose (Fig. 5).

(11) Support transfer case with transmission jack.

(12) Secure transfer case to jack with chains.

(13) Remove nuts attaching transfer case to transmission.

(14) Pull transfer case and jack rearward to disengage transfer case (Fig. 5).

(15) Remove transfer case from under vehicle.

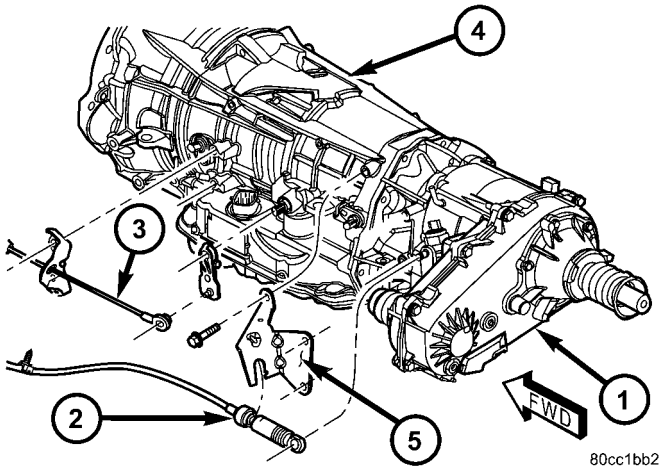

Fig. 4 Remove Shift Cables

1 - TRANSFER CASE
2 - TRANSFER CASE SHIFT CABLE
3 - TRANSMISSION SHIFT CABLE
4 - AUTOMATIC TRANSMISSION
5 - TRANSFER CASE SHIFT CABLE BRACKET

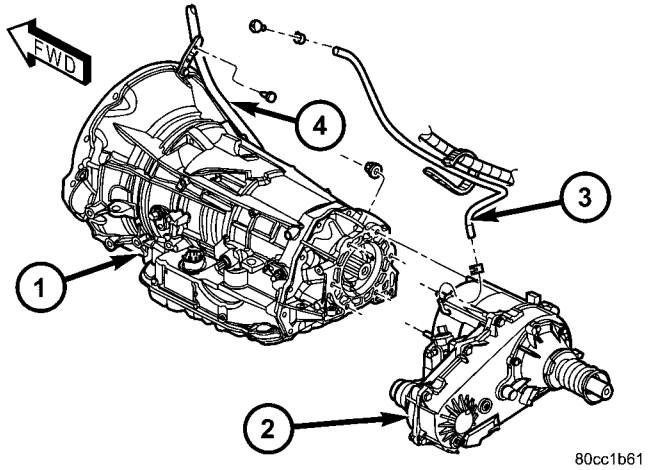

Fig. 5 Remove Vent Hose and Transfer Case

1 - AUTOMATIC TRANSMISSION
2 - TRANSFER CASE
3 - VENT HOSE
4 - FILL TUBE

DISASSEMBLY

Position transfer case on shallow drain pan. Remove drain plug and drain lubricant remaining in case.

REAR RETAINER AND OIL PUMP

(1) Spread band clamp which holds output shaft boot to the output shaft slinger with a suitable awl, or equivalent.

(2) Remove output shaft boot from slinger and output shaft.

(3) Remove the output shaft rear slinger using Puller MD-998056-A (Fig. 6).

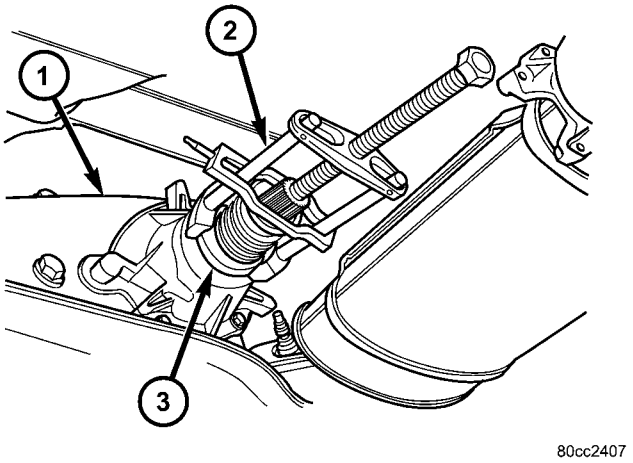

Fig. 6 Rear Slinger Removal

1 - TRANSFER CASE
2 - PULLER MD-998056-A
3 - REAR SLINGER

TRANSFER CASE - NV231 (Continued)

(4) Use a suitable pry tool, or a slide hammer mounted screw, to remove the seal from the rear retainer (Fig. 7).

(5) Remove the rear output bearing I.D. retaining ring (Fig. 8).

(6) Remove the bolts holding the rear retainer to the rear case half.

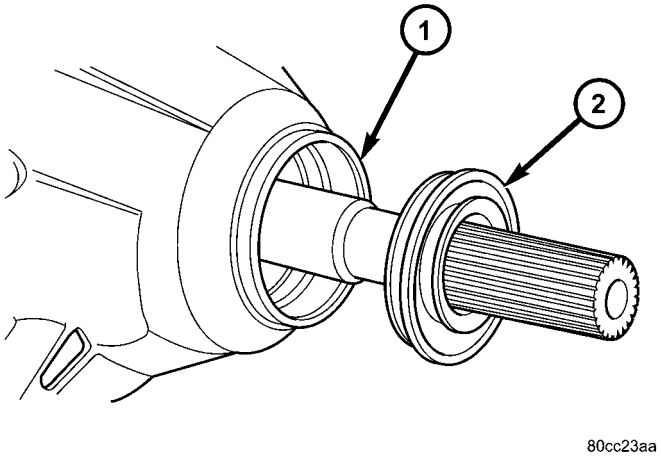

Fig. 7 Rear Retainer Seal

1 - REAR RETAINER
2 - OUTPUT SHAFT SEAL

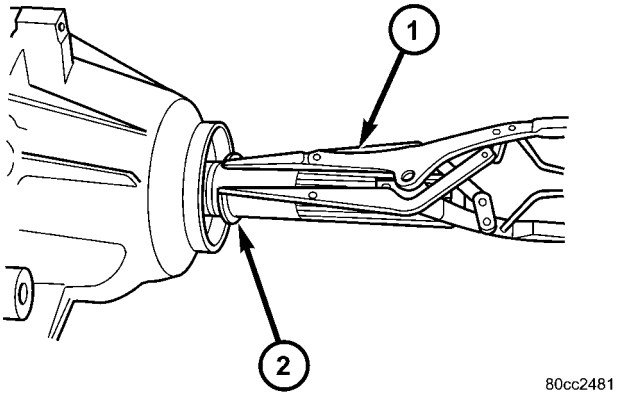

Fig. 8 Output Shaft Rear Bearing Retaining Ring

1 - SNAP-RING PLIERS
2 - RETAINING RING

(7) Tap rear retainer with rawhide or rubber mallet to loosen sealer bead.

(8) Remove rear retainer from rear case half (Fig. 9).

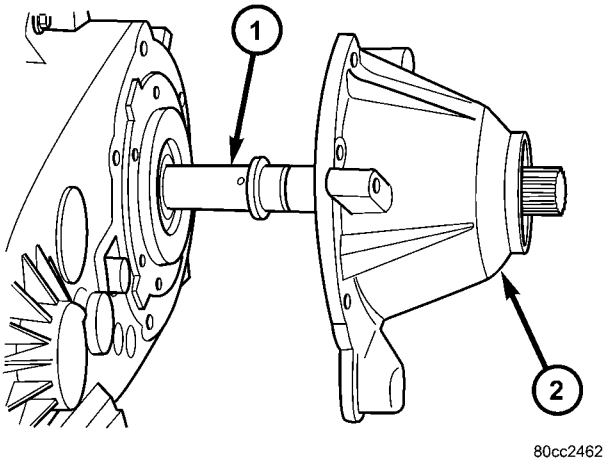

Fig. 9 Rear Retainer Removal

1 - MAINSHAFT
2 - REAR RETAINER

(9) Remove the remaining output shaft bearing snap-ring.

(10) Disengage oil pickup tube from oil pump and remove oil pump assembly. Remove oil pump by tilting the edge of the oil pump from under the edge of the rear case half and sliding the pump off the output shaft (Fig. 10).

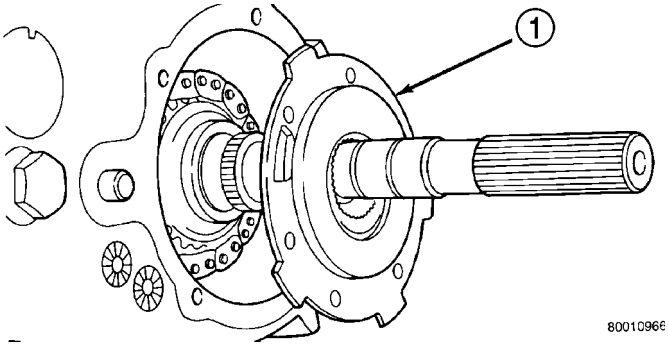

Fig. 10 Oil Pump Removal

1 - OIL PUMP

TRANSFER CASE - NV231 (Continued)

(11) Remove pick-up tube o-ring from oil pump (Fig. 11), if necessary. Do not disassemble the oil pump, it is not serviceable.

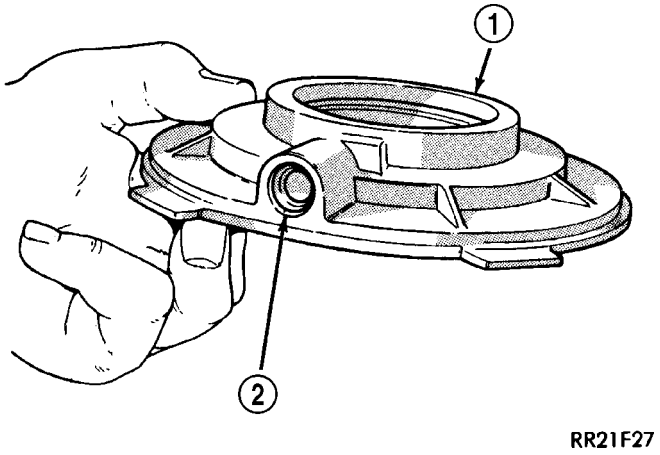

Fig. 11 Pick-up Tube O-ring Location

1 - OIL PUMP
2 - O-RING

COMPANION FLANGE AND RANGE LEVER

(1) Remove transfer case position sensor (Fig. 12).

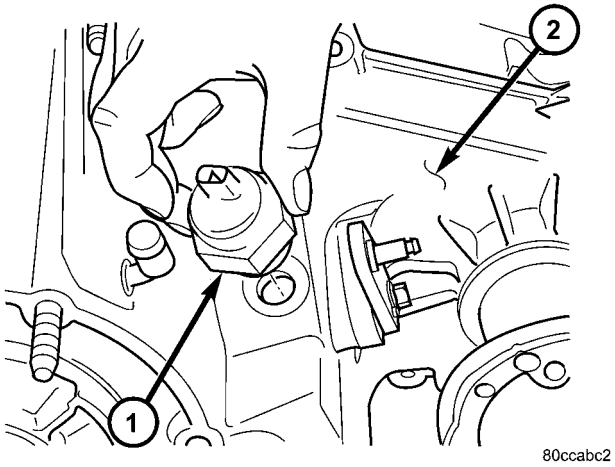

Fig. 12 Remove Transfer Case Position Sensor

1 - TRANSFER CASE POSITION SENSOR
2 - TRANSFER CASE

(2) Install two bolts (Fig. 13) partially into the propellor shaft companion flange, 180° from each other.

(3) Install the rectangular end of the Flange Holder C-3281 over the bolts to hold the companion flange stationary and remove the nut holding the companion flange to the output shaft.

(4) Use Remover C-452 (Fig. 14) to remove the companion flange.

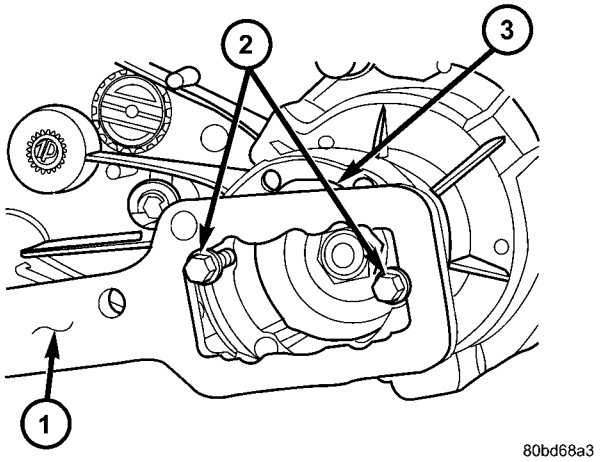

Fig. 13 Hold Companion Flange - Typical

1 - HOLDER C-3281
2 - BOLTS
3 - COMPANION FLANGE

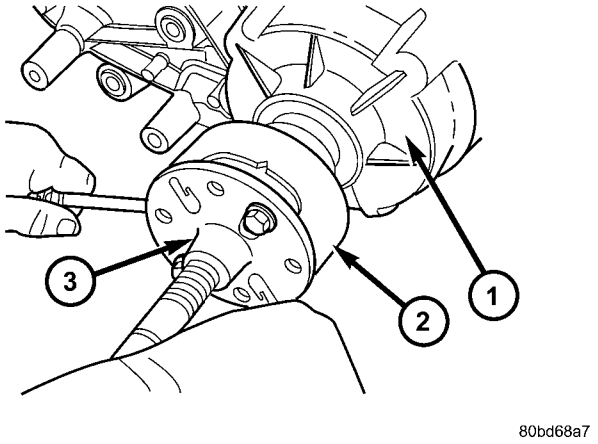

Fig. 14 Remove Companion Flange - Typical

1 - TRANSFER CASE
2 - COMPANION FLANGE
3 - REMOVER C-452

(5) Remove seal washer from front output shaft. Discard washer as it should not be reused.

TRANSFER CASE - NV231 (Continued)

(6) Remove the bolt (Fig. 15) that attaches the range lever to sector shaft. Then move sector to neutral position and remove range lever from shaft.

NOTE: Be sure to note the orientation of the range lever (lever up or down) so that it may be re-installed in the same direction.

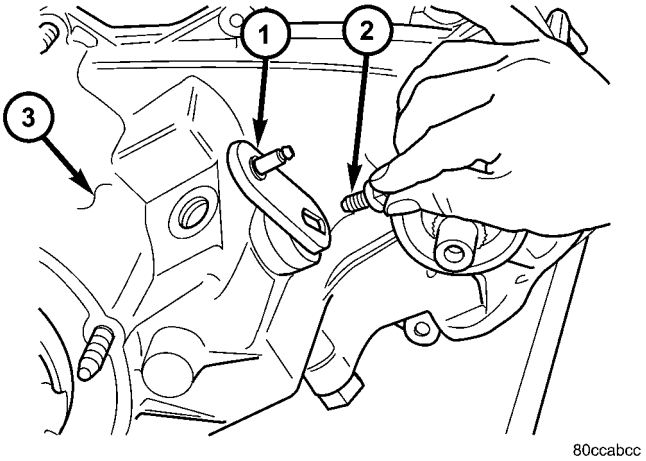

Fig. 15 Remove Shift Lever Bolt

1 - RANGE LEVER
2 - RANGE LEVER BOLT
3 - TRANSFER CASE

FRONT OUTPUT SHAFT AND DRIVE CHAIN

(1) Support transfer case so rear case is facing upward.

(2) Remove bolts holding front case to rear case. The case alignment bolts require flat washers (Fig. 16).

(3) Loosen rear case with flat blade screwdriver to break sealer bead. Insert pry tool blade only into notches provided at each end of case (Fig. 17).

(4) Remove rear case from front case.

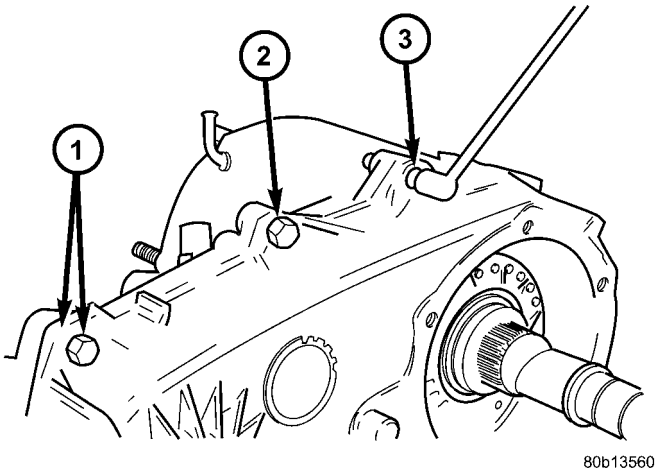

Fig. 16 Spline And Dowel Bolt Locations

1 - DOWEL BOLT AND WASHER (2)
2 - CASE BOLTS
3 - SPLINE HEAD BOLT (1)

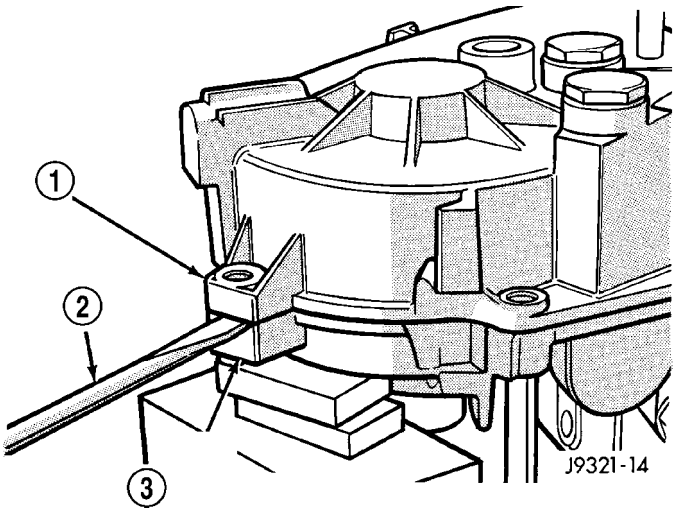

Fig. 17 Loosening Rear Case - Typical

1 - REAR CASE
2 - PRY TOOL (IN CASE SLOT)
3 - FRONT CASE

(5) Remove oil pickup tube from rear case (Fig. 18).

(6) Remove mode fork spring (Fig. 19).

(7) Pull front output shaft upward and out of front output shaft bearing (Fig. 20).

(8) Remove front output shaft and chain.

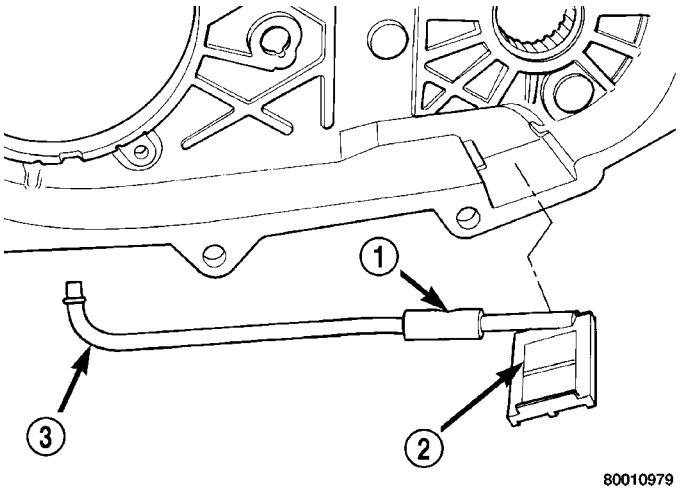

Fig. 18 Oil Pickup Tube Removal

1 - CONNECTING HOSE
2 - PICKUP SCREEN
3 - PICKUP TUBE

TRANSFER CASE - NV231 (Continued)

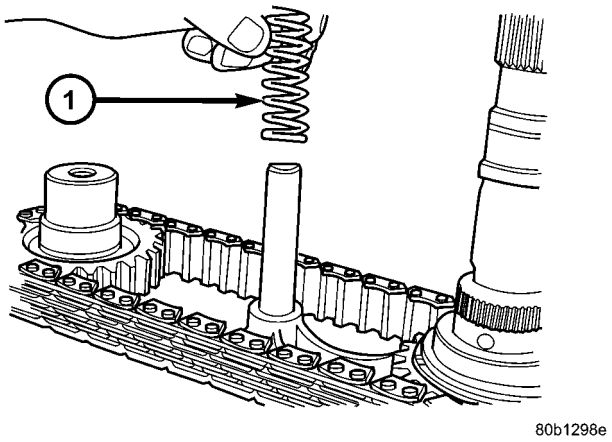

Fig. 19 Mode Fork Spring Removal

1 - MODE FORK SPRING

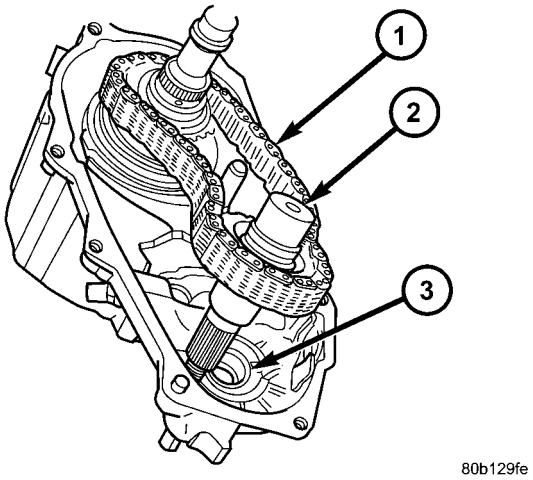

Fig. 20 Remove Front Output Shaft And Drive Chain

1 - DRIVE CHAIN
2 - FRONT OUTPUT SHAFT
3 - FRONT OUTPUT SHAFT BEARING

SHIFT FORKS AND MAINSHAFT

(1) Remove mainshaft from mode sleeve and input gear pilot bearing.

(2) Remove detent plug, O-ring, detent spring and detent plunger (Fig. 21).

(3) Remove mode fork and sleeve as an assembly (Fig. 22). Note position of sleeve for assembly reference. The short side of the sleeve faces upward.1

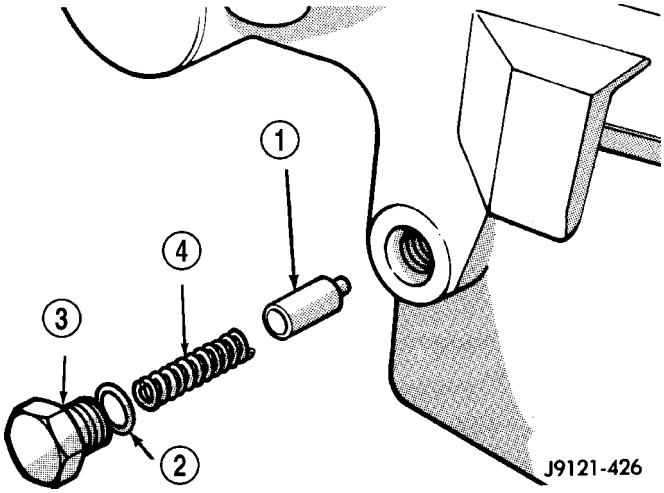

Fig. 21 Detent Plug, Spring, And Plunger Removal

1 - PLUNGER
2 - O-RING
3 - PLUG
4 - SPRING

(4) Remove range fork and sleeve as an assembly (Fig. 23). Note fork position for installation reference.

(5) Remove shift sector from front case (Fig. 24).

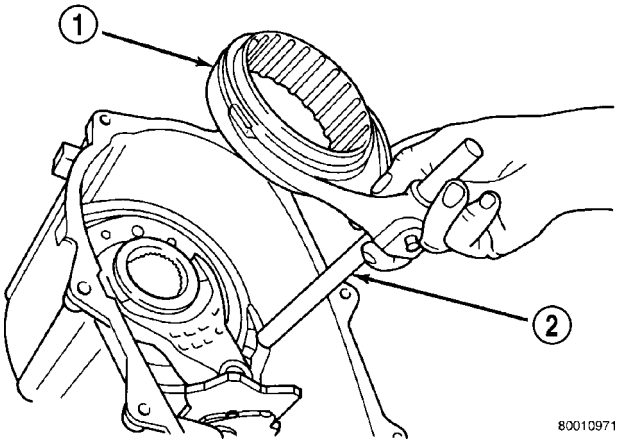

Fig. 22 Mode Fork And Sleeve Removal

1 - MODE SLEEVE
2 - MODE FORK AND RAIL

TRANSFER CASE - NV231 (Continued)

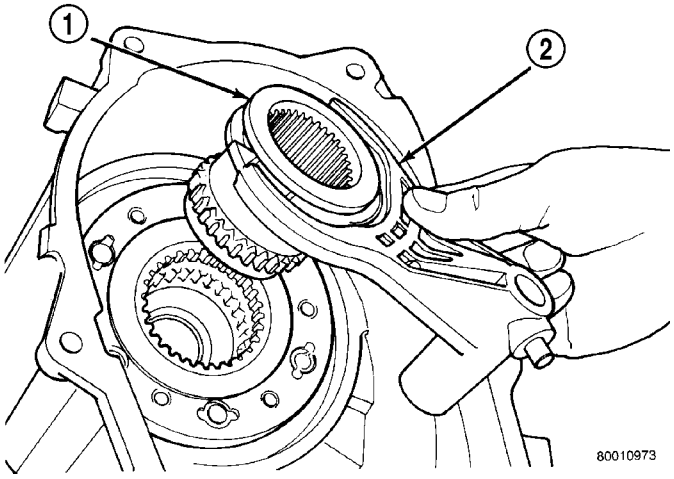

Fig. 23 Range Fork And Sleeve Removal

1 - RANGE HUB
2 - RANGE FORK

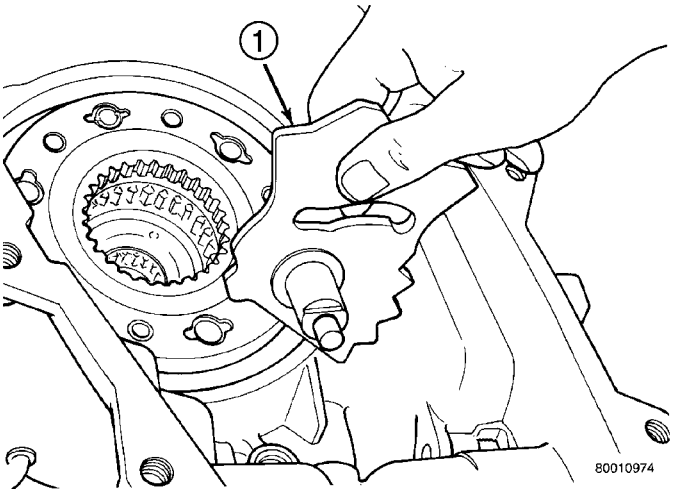

Fig. 24 Shift Sector Removal

1 - SHIFT SECTOR

(6) Remove the shift sector shaft seal (Fig. 25).

(7) Remove the shift sector shaft bearing with an appropriate socket (Fig. 26).

MAINSHAFT

(1) Remove mode hub retaining ring with heavy duty snap-ring pliers (Fig. 27).

(2) Slide mode hub off mainshaft (Fig. 28).

(3) Slide drive sprocket off mainshaft (Fig. 29).

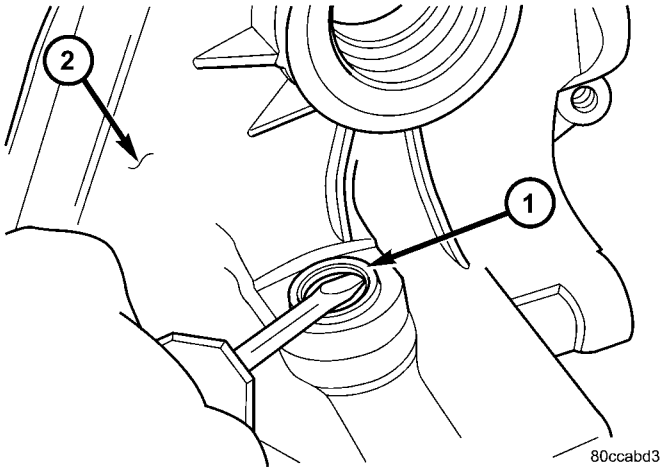

Fig. 25 Remove Shift Shaft Seal

1 - SHIFT SHAFT SEAL
2 - TRANSFER CASE

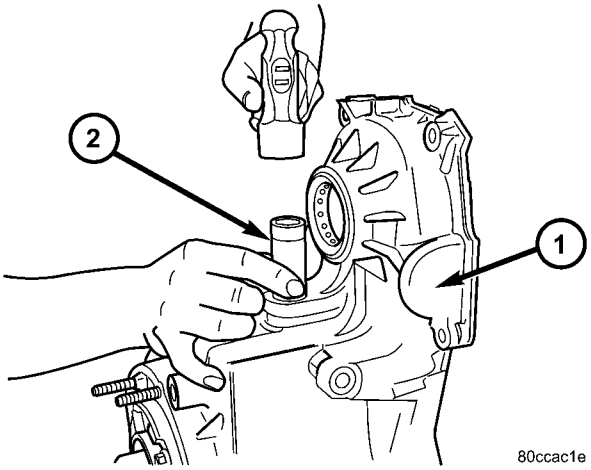

Fig. 26 Remove Shift Sector Shaft Bearing

1 - TRANSFER CASE
2 - SOCKET

TRANSFER CASE - NV231 (Continued)

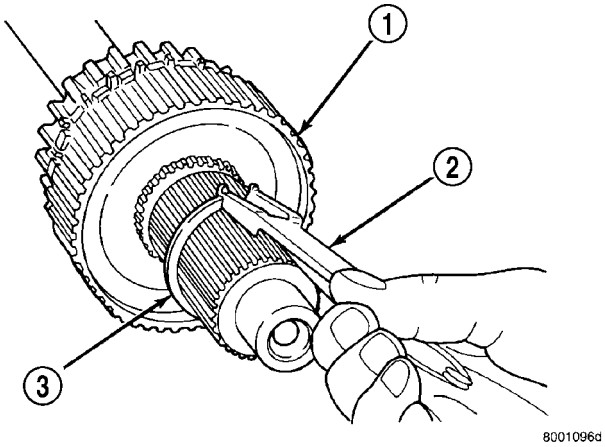

Fig. 27 Mode Hub Retaining Ring Removal

1 - MODE HUB
2 - SNAP-RING PLIERS (HEAVY DUTY)
3 - MODE HUB RETAINING RING

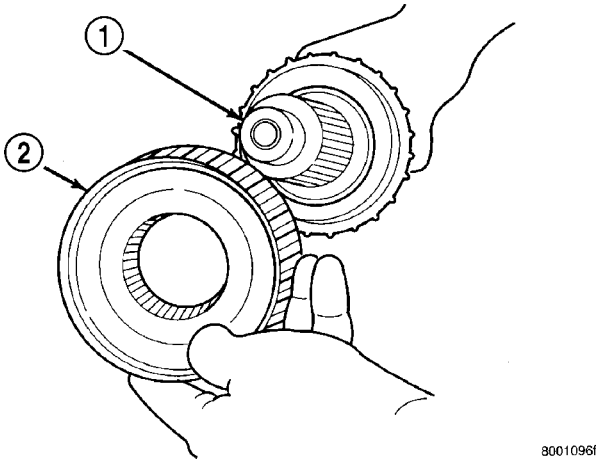

Fig. 28 Mode Hub Removal

1 - MAINSHAFT
2 - MODE HUB

INPUT GEAR AND LOW RANGE GEAR

(1) Remove front bearing retainer attaching bolts (Fig. 30).

(2) Remove front bearing retainer. Pry retainer loose with pry tool positioned in slots at each end of retainer (Fig. 31).

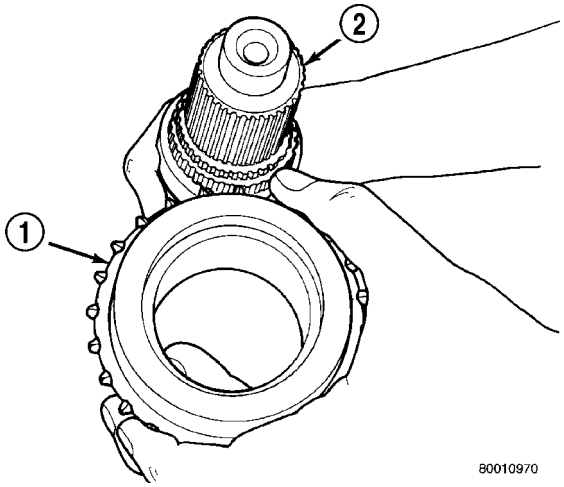

Fig. 29 Drive Sprocket Removal

1 - DRIVE SPROCKET
2 - MAINSHAFT

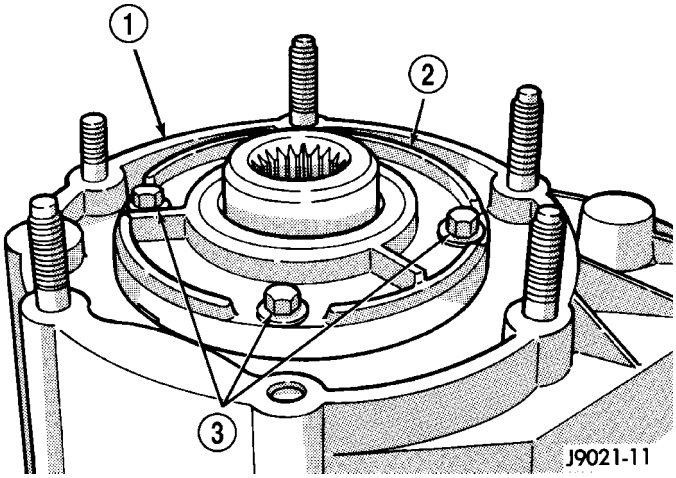

Fig. 30 Front Bearing Retainer Bolts

1 - FRONT CASE
2 - FRONT BEARING RETAINER
3 - RETAINER BOLTS

TRANSFER CASE - NV231 (Continued)

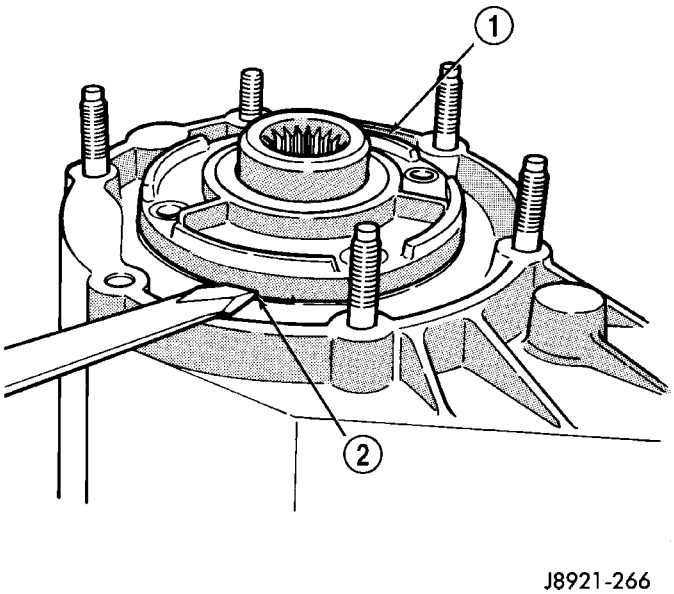

Fig. 31 Front Bearing Retainer Removal

1 - FRONT BEARING RETAINER
2 - RETAINER SLOT

(3) Remove front bearing retainer.

(4) Remove input gear retaining ring with heavy duty snap-ring pliers (Fig. 32)

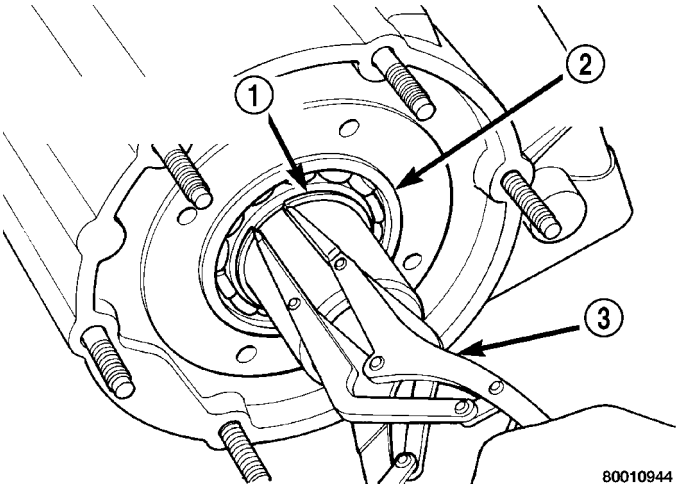

Fig. 32 Removing Input Gear Retaining Ring

1 - INPUT GEAR BEARING RETAINING RING
2 - INPUT GEAR BEARING
3 - SNAP-RING PLIERS

(5) Place front case in horizontal position. Then remove input gear and low range gear as an assembly (Fig. 33). Tap gear out of bearing with plastic mallet if necessary.

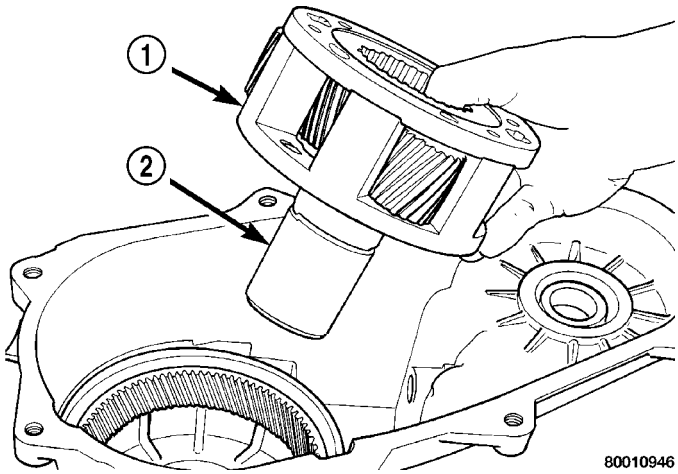

Fig. 33 Input Gear And Planetary Carrier Removal

1 - PLANETARY ASSEMBLY
2 - INPUT GEAR

INPUT AND LOW RANGE GEAR

(1) Remove snap-ring that retains input gear in low range gear (Fig. 34).

(2) Remove retainer (Fig. 35).

(3) Remove front tabbed thrust washer (Fig. 36).

(4) Remove input gear (Fig. 37).

(5) Remove rear tabbed thrust washer from low range gear (Fig. 38).

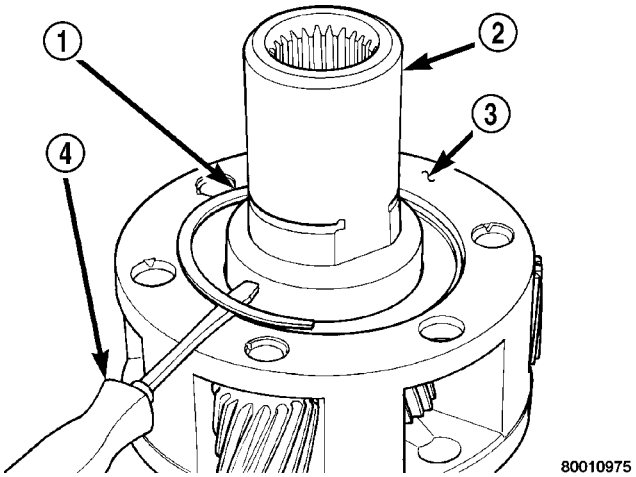

Fig. 34 Input Gear Snap-Ring Removal

1 - CARRIER LOCK RETAINING RING
2 - INPUT GEAR
3 - PLANETARY CARRIER
4 - SCREWDRIVER

TRANSFER CASE - NV231 (Continued)

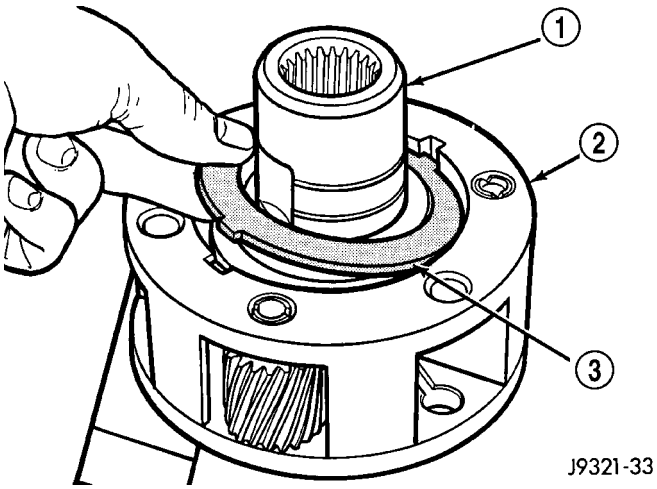

Fig. 35 Input Gear Retainer Removal

1 - INPUT GEAR
2 - LOW RANGE GEAR
3 - RETAINER

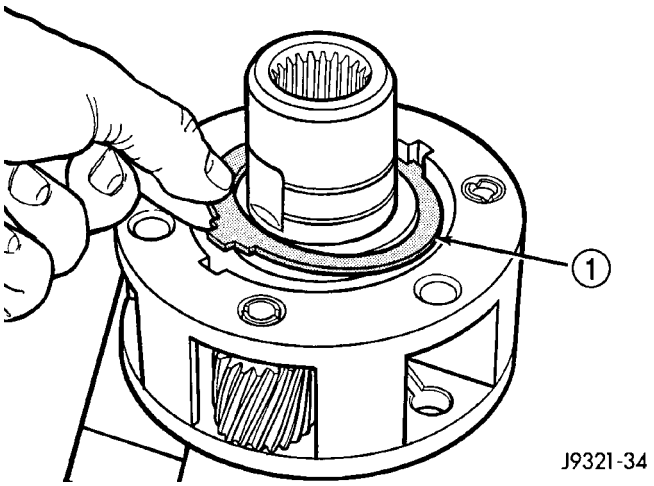

Fig. 36 Front Tabbed Thrust Washer Removal

1 - FRONT TABBED THRUST WASHER

CLEANING

Clean the transfer case parts with a standard parts cleaning solvent. Remove all traces of sealer from the cases and retainers with a scraper and 3M™ all purpose cleaner. Use compressed air to remove solvent residue from oil feed passages in the case halves, retainers, gears, and shafts.

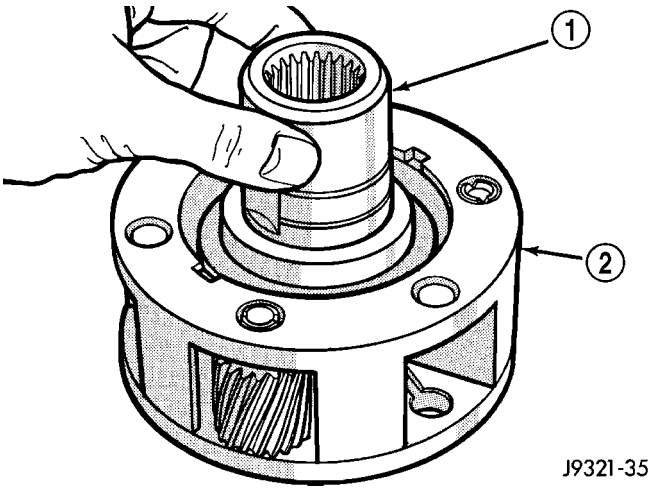

Fig. 37 Input Gear Removal

1 - INPUT GEAR
2 - LOW RANGE GEAR

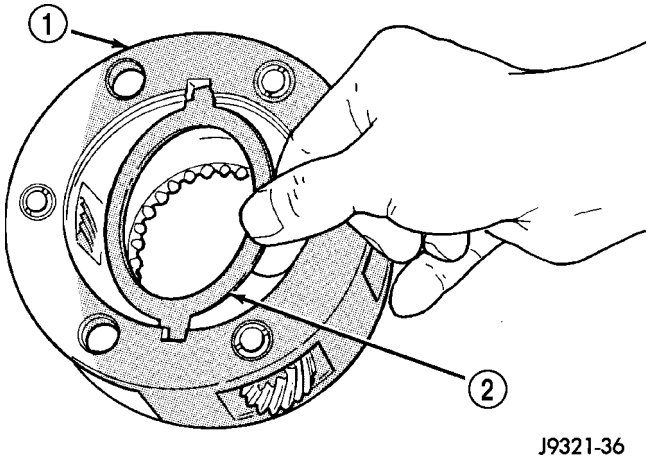

Fig. 38 Rear Tabbed Thrust Washer Removal

1 - LOW RANGE GEAR
2 - REAR TABBED THRUST WASHER

INSPECTION

MAINSHAFT/SPROCKET/HUB

Inspect the splines on the hub and shaft and the teeth on the sprocket (Fig. 39). Minor nicks and scratches can be smoothed with an oilstone. However, replace any part that is damaged.

Check the contact surfaces in the sprocket bore and on the mainshaft. Minor nicks and scratches can be smoothed with 320-400 grit emery cloth but do not try to salvage the shaft if nicks or wear is severe.

INPUT GEAR AND PLANETARY CARRIER

Check the teeth on the gear (Fig. 40). Minor nicks can be dressed off with an oilstone but replace the gear if any teeth are broken, cracked, or chipped. The bearing surface on the gear can be smoothed with 300-400 grit emery cloth if necessary.

TRANSFER CASE - NV231 (Continued)

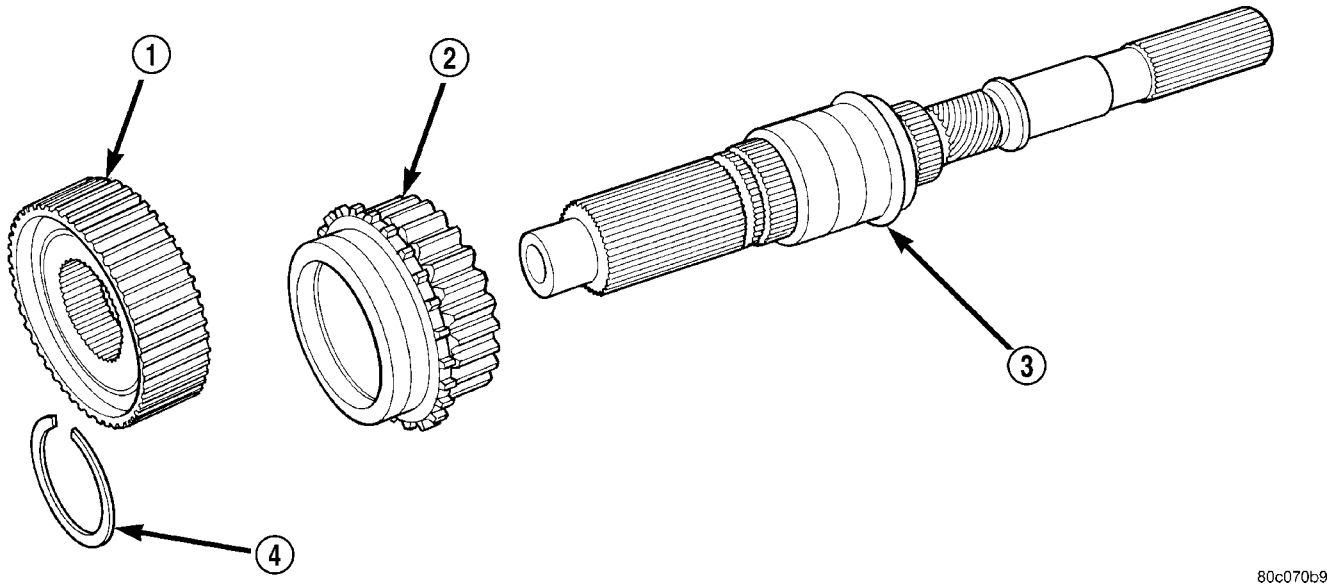

Fig. 39 Mainshaft, Mode Hub, And Drive Sprocket

1 - MODE HUB
2 - DRIVE SPROCKET
3 - MAINSHAFT
4 - MODE HUB RETAINING RING

Examine the carrier body and pinion gears for wear or damage. The carrier will have to be replaced as an assembly if the body, pinion pins, or pinion gears are damaged.

Check the lock ring and both thrust washers for wear or cracks. Replace them if necessary. Also replace the lock retaining ring if bent, distorted, or broken.

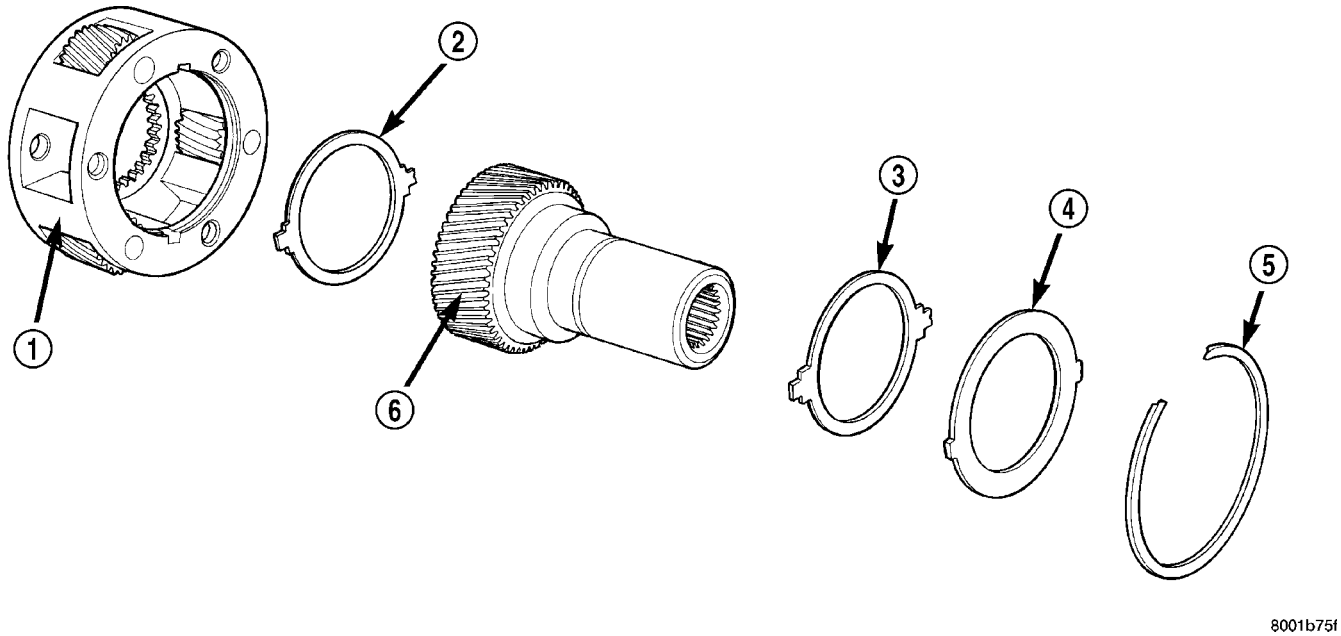

Fig. 40 Input Gear And Carrier Components

1 - PLANETARY CARRIER
2 - REAR THRUST WASHER
3 - FRONT THRUST WASHER
4 - CARRIER LOCK RING
5 - CARRIER LOCK RETAINING RING
6 - INPUT GEAR

TRANSFER CASE - NV231 (Continued)

SHIFT FORKS/HUBS/SLEEVES

Check condition of the shift forks and mode fork shift rail (Fig. 41). Minor nicks on the shift rail can be smoothed with 320-400 grit emery cloth.

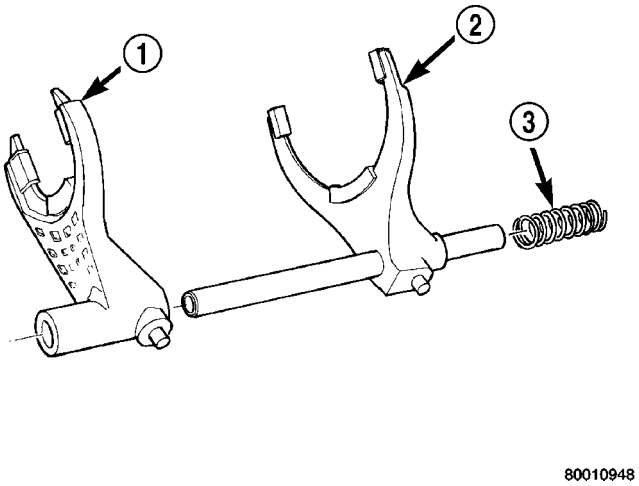

Fig. 41 Shift Forks

1 - RANGE FORK
2 - MODE FORK AND RAIL
3 - MODE SPRING

Inspect the shift fork wear pads (Fig. 42). The mode fork pads are serviceable and can be replaced if necessary. The range fork pads are not serviceable. The fork must be replaced as an assembly if the pads are worn or damaged.

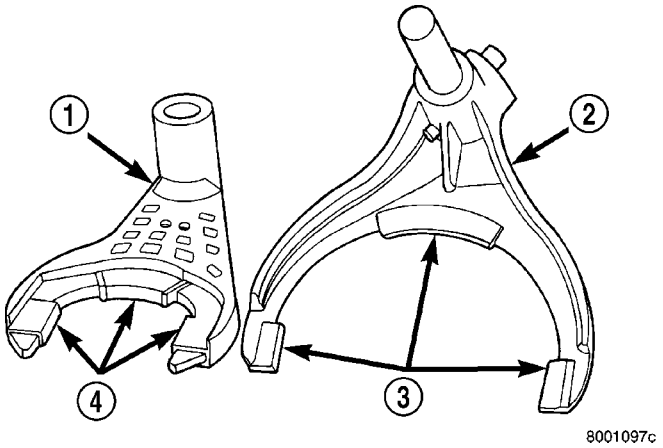

Fig. 42 Shift Fork And Wear Pad Locations

1 - RANGE FORK
2 - MODE FORK
3 - WEAR PADS (SERVICEABLE)
4 - WEAR PADS (SERVICEABLE)

Check both of the sleeves for wear or damage, especially on the interior teeth. Replace the sleeves if wear or damage is evident.

REAR RETAINER/BEARING/ SEAL/SLINGER/BOOT

Inspect the retainer components (Fig. 43). Replace the bearing if rough or noisy. Check the retainer for cracks or wear in the bearing bore. Clean the retainer sealing surfaces with a scraper and 3M™ all purpose cleaner. This will ensure proper adhesion of the sealer during reassembly.

The output shaft slinger and seal should be replaced outright; do not reuse either part.

Replace any part if distorted, bent, or broken. Also replace the boot if cut or torn. Replace the boot band clamps, do not reuse them.

REAR OUTPUT SHAFT/YOKE/DRIVE CHAIN

Check condition of the seal contact surfaces of the yoke slinger (Fig. 44). This surface must be clean and smooth to ensure proper seal life. Replace the yoke nut and seal washer as neither part should be reused.

Inspect the shaft threads, sprocket teeth, and bearing surfaces. Minor nicks on the teeth can be smoothed with an oilstone. Use 320-400 grit emery to smooth minor scratches on the shaft bearing surfaces. Rough threads on the shaft can be chased if necessary. Replace the shaft if the threads are damaged, bearing surfaces are scored, or if any sprocket teeth are cracked or broken.

Examine the drive chain and shaft bearings. Replace the chain and both sprockets if the chain is stretched, distorted, or if any of the links bind. Replace the bearings if rough, or noisy.

LOW RANGE ANNULUS GEAR

Inspect annulus gear condition carefully. The gear is only serviced as part of the front case. If the gear is damaged, it will be necessary to replace the gear and front case as an assembly. Do not attempt to remove the gear (Fig. 45)

FRONT/REAR CASES AND FRONT RETAINER

Inspect the cases and retainer for wear and damage. Clean the sealing surfaces with a scraper and 3M™ all purpose cleaner. This will ensure proper sealer adhesion at assembly. Replace the input retainer seal; do not reuse it.

Check case condition. If leaks were a problem, look for gouges and severe scoring of case sealing surfaces. Also make sure the front case mounting studs are in good condition.

Check the front case mounting studs and vent tube. The tube can be secured with Loctite™ 271 or 680 if loose. The stud threads can be cleaned up with a die if necessary. Also check condition of the fill/drain plug threads in the rear case. The threads can be repaired with a thread chaser or tap if necessary. Or the threads can be repaired with Helicoil™ stainless steel inserts if required.

TRANSFER CASE - NV231 (Continued)

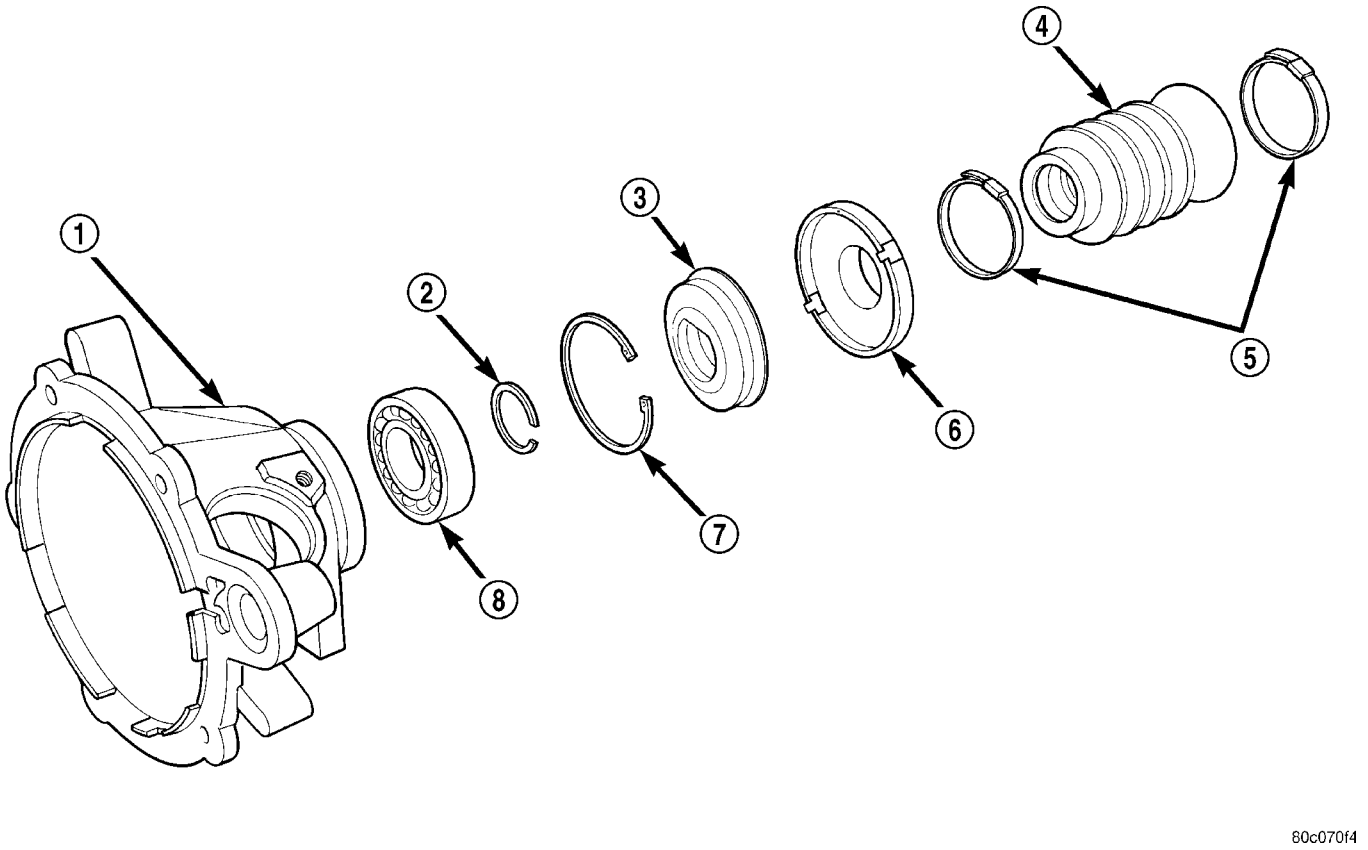

Fig. 43 Rear Retainer Without Output Shaft Damper

1 - REAR RETAINER
2 - REAR BEARING I.D. MAINSHAFT RETAINING RING
3 - REAR SEAL
4 - BOOT
5 - BAND CLAMPS
6 - REAR SLINGER
7 - REAR BEARING O.D. RETAINING RING
8 - REAR BEARING

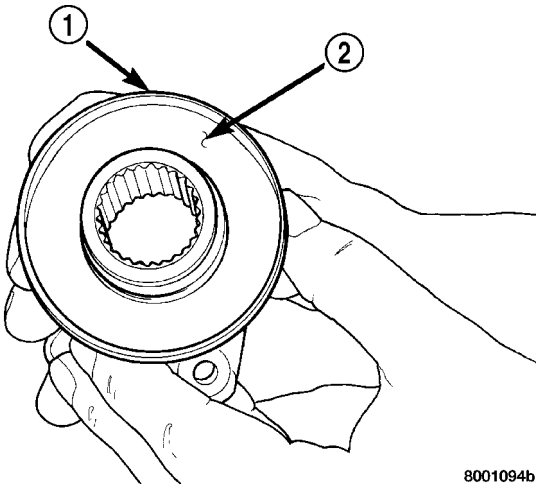

Fig. 44 Seal Contact Surface Of Yoke Slinger

1 - FRONT SLINGER (PART OF YOKE)
2 - SEAL CONTACT SURFACE MUST BE CLEAN AND SMOOTH

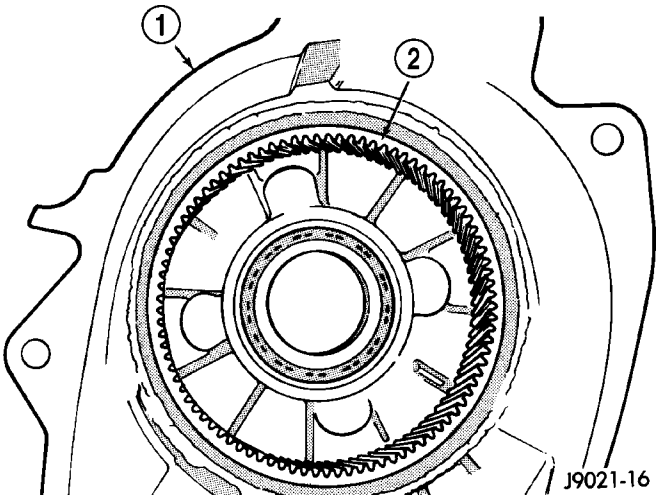

Fig. 45 Low Range Annulus Gear

1 - FRONT CASE
2 - LOW RANGE ANNULUS GEAR

OIL PUMP/OIL PICKUP

Examine the oil pump pickup parts. Replace the pump if any part appears to be worn or damaged. Do not disassemble the pump as individual parts are not available. The pump is only available as a complete

TRANSFER CASE - NV231 (Continued)

assembly. The pickup screen, hose, and tube are the only serviceable parts and are available separately.

ASSEMBLY

Lubricate transfer case components with Mopar® ATF +4, Automatic Transmission Fluid or petroleum jelly (where indicated) during assembly.

BEARINGS AND SEALS

CAUTION: The bearing bores in various transfer case components contain oil feed holes. Make sure replacement bearings do not block the holes.

(1) Remove the front output shaft seal from case with pry tool (Fig. 46).

(2) Remove the front output shaft bearing retaining ring with screwdriver (Fig. 47).

(3) Remove bearing with Tool Handle C-4171 and Tool 5065 (Fig. 48).

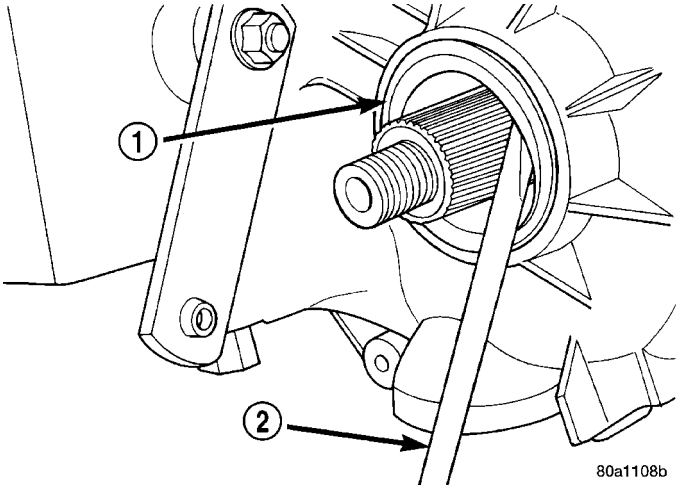

Fig. 46 Front Output Seal Removal - Typical

1 - OUTPUT SHAFT SEAL
2 - PRYBAR

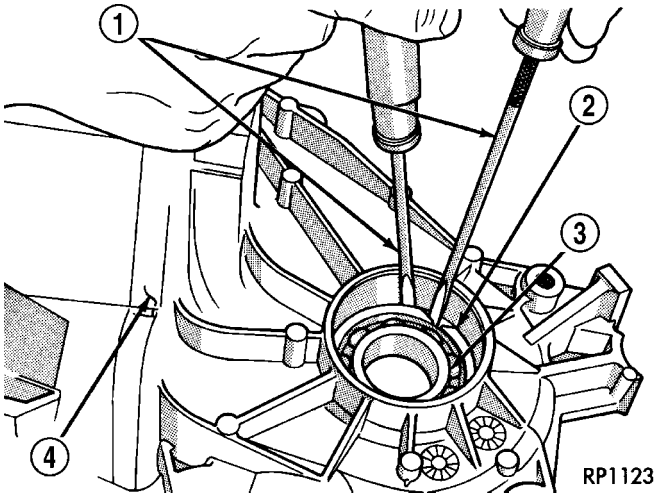

Fig. 47 Front Output Shaft Bearing Retaining Ring Removal

1 - SCREWDRIVERS
2 - SNAP-RING
3 - FRONT OUTPUT SHAFT BEARING
4 - FRONT CASE

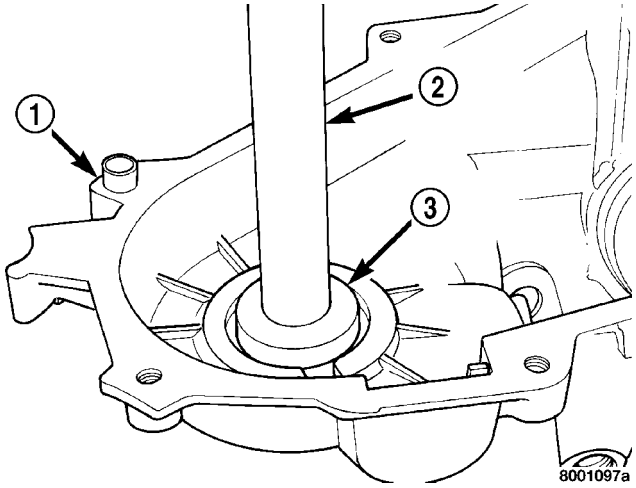

Fig. 48 Front Output Shaft Bearing Removal

1 - FRONT CASE
2 - SPECIAL TOOL C-4171
3 - SPECIAL TOOL 5065

TRANSFER CASE - NV231 (Continued)

(4) Install front output shaft front bearing in case with Tool Handle C-4171 and Installer 5064 (Fig. 49).

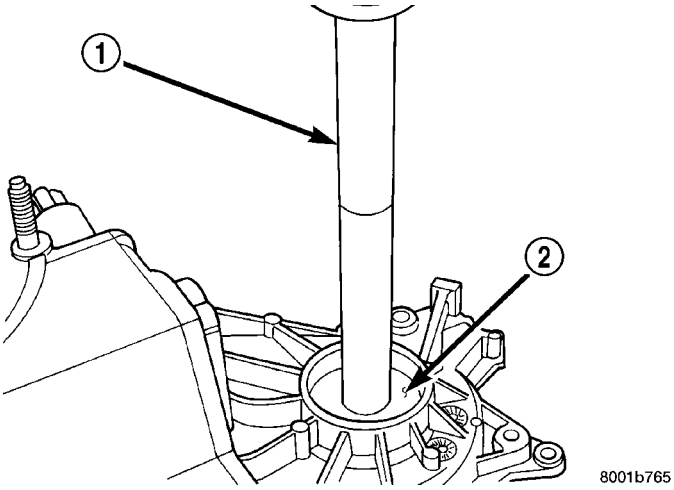

Fig. 49 Front Output Shaft Bearing Installation

1 - SPECIAL TOOL C-4171
2 - SPECIAL TOOL 5064

(5) Install output shaft front bearing retaining ring (Fig. 50). Start ring into place by hand. Then use small screwdriver to work ring into case groove. Be sure ring is fully seated before proceeding.

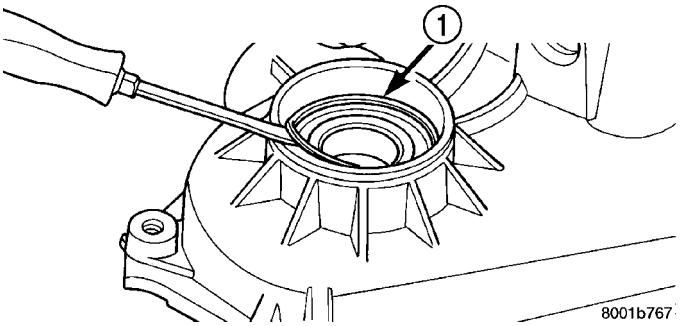

Fig. 50 Installing Output Shaft Front Bearing Retaining Ring

1 - WORK RETAINING RING INTO BORE GROOVE WITH SMALL SCREWDRIVER

(6) Install new front output seal in front case with Installer Tool 8143-A as follows:

(a) Place new seal on tool. **Garter spring on seal goes toward interior of case.**

(b) Start seal in bore with light taps from hammer (Fig. 51). Once seal is started, continue tapping seal into bore until installer tool bottoms against case.

(7) Remove the output shaft rear bearing with the screw and jaws from Remover L-4454 and Cup 8148 (Fig. 52).

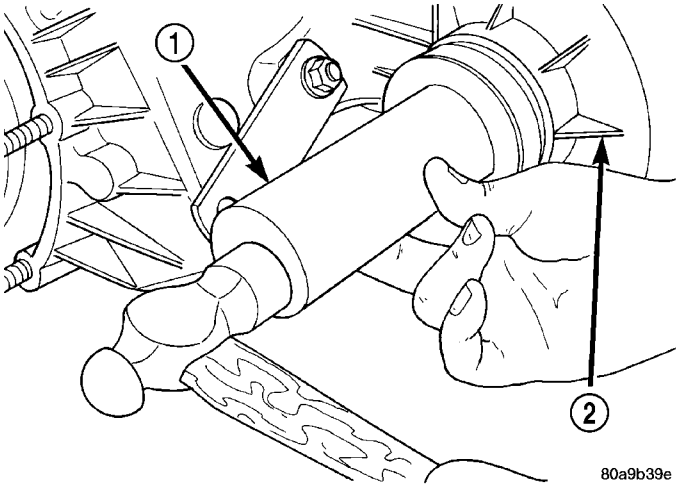

Fig. 51 Front Output Seal Installation - Typical

1 - INSTALLER 8143-A
2 - TRANSFER CASE

(8) Install new bearing with Tool Handle C-4171 and Installer 5066 (Fig. 53). The bearing bore is chamfered at the top. Install the bearing so it is flush with the lower edge of this chamfer (Fig. 54).

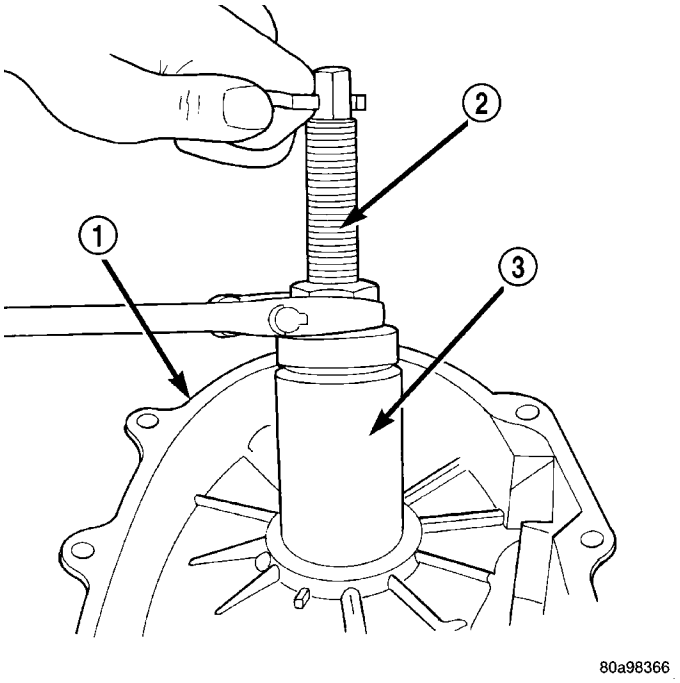

Fig. 52 Output Shaft Rear Bearing Removal

1 - REAR CASE
2 - SPECIAL TOOL L-4454-1 AND L-4454-3
3 - SPECIAL TOOL 8148

TRANSFER CASE - NV231 (Continued)

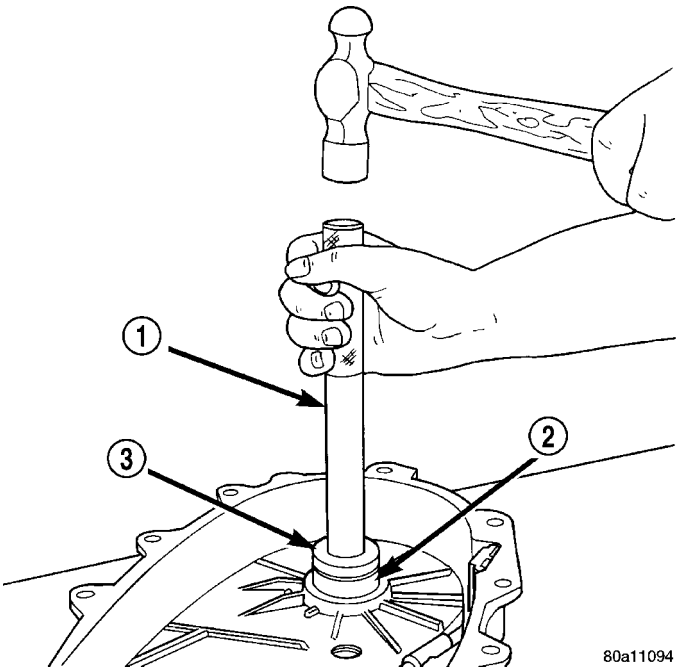

Fig. 53 Output Shaft Rear Bearing Installation

1 - HANDLE C-4171
2 - OUTPUT SHAFT INNER BEARING
3 - INSTALLER 5066

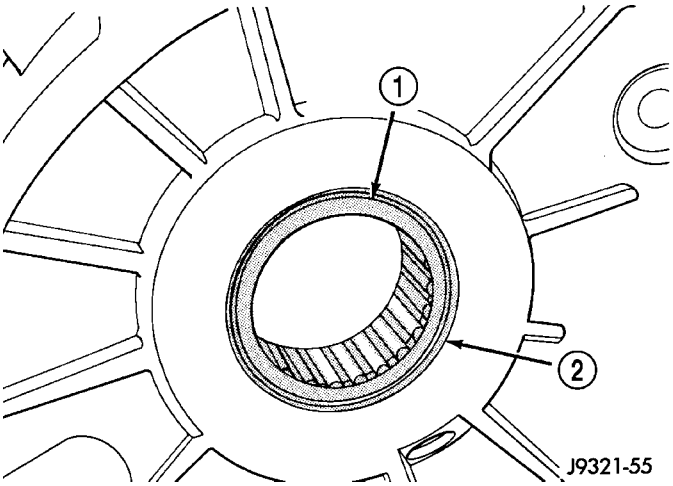

Fig. 54 Output Shaft Rear Bearing Installation Depth

1 - BEARING (SEATED) AT LOWER EDGE OF CHAMFER
2 - CHAMFER

(9) Using Remover C-4210 and Handle C-4171, drive input shaft bearing from inside the annulus gear opening in the case (Fig. 55).

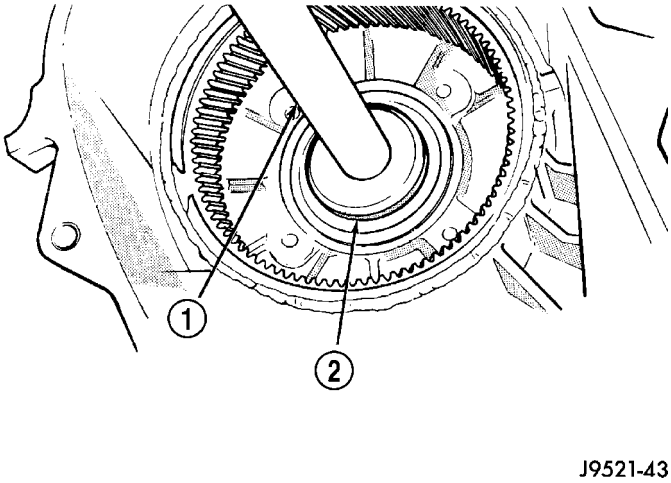

Fig. 55 Input Shaft Bearing Removal

1 - SPECIAL TOOL C-4171
2 - SPECIAL TOOL C-4210

(10) Install locating ring on new bearing.

(11) Position case so forward end is facing upward.

(12) Using Remover C-4210 and Handle C-4171, drive input shaft bearing into case. The bearing locating ring must be fully seated against case surface (Fig. 56).

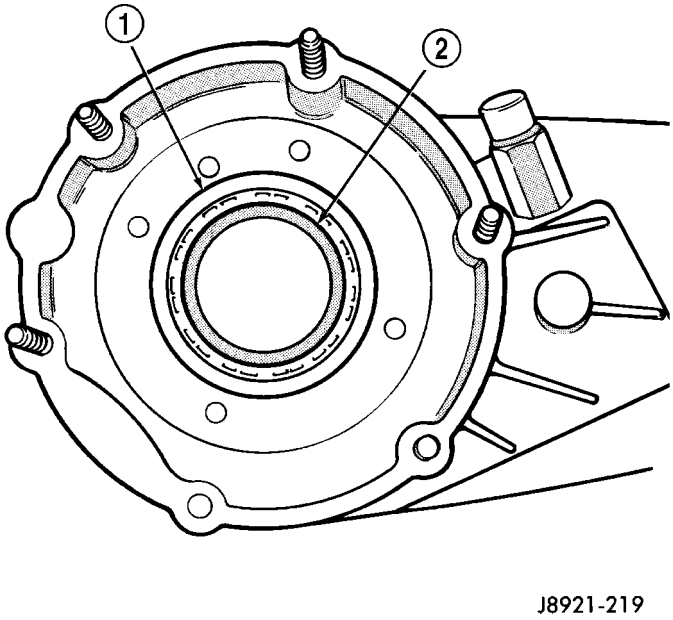

Fig. 56 Seating Input Shaft Bearing

1 - SNAP-RING
2 - INPUT SHAFT BEARING

TRANSFER CASE - NV231 (Continued)

(13) Remove input gear pilot bearing by inserting a suitably sized drift into the splined end of the input gear and driving the bearing out with the drift and a hammer (Fig. 57).

(14) Install new pilot bearing with Installer 5065 and Handle C-4171 (Fig. 58).

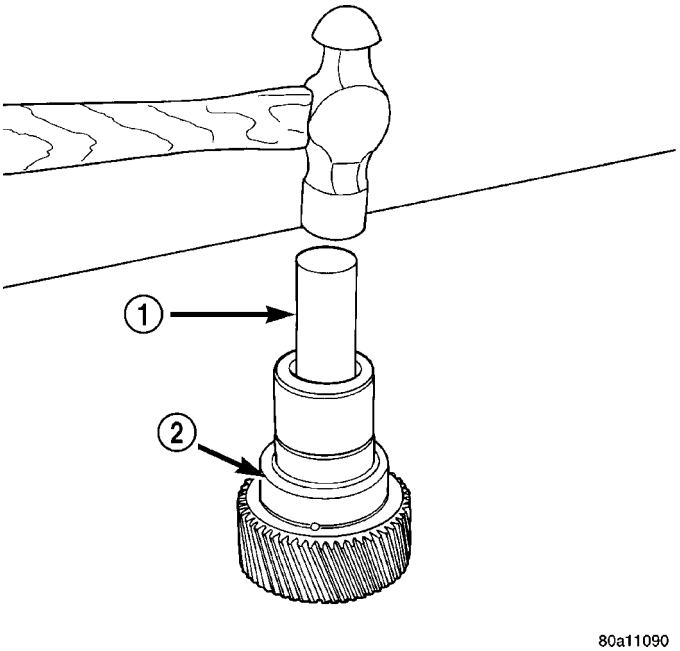

Fig. 57 Remove Input Gear Pilot Bearing

1 - DRIFT
2 - INPUT GEAR

(15) Remove front bearing retainer seal with suitable pry tool.

(16) Install new front bearing retainer seal with Installer 7884 (Fig. 59).

(17) Remove seal from oil pump housing with a suitable pry tool

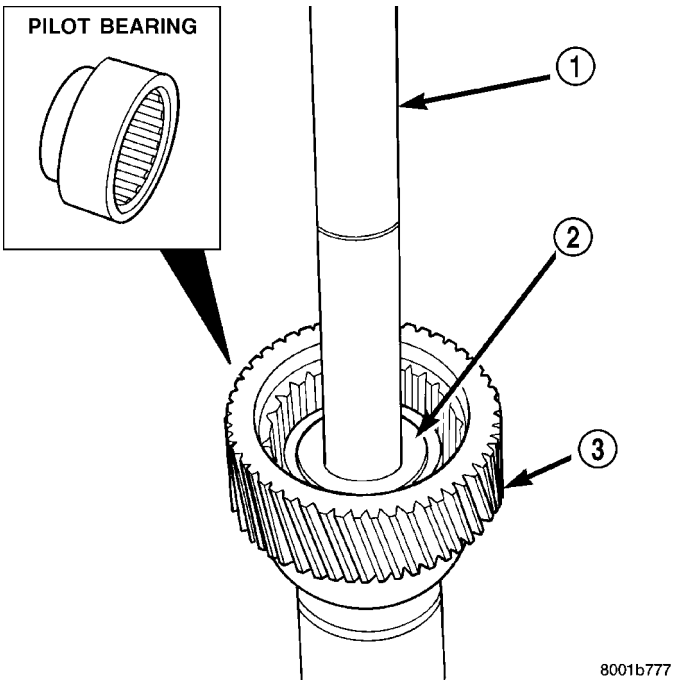

Fig. 58 Install Input Gear Pilot Bearing

1 - SPECIAL TOOL C-4171
2 - SPECIAL TOOL 5065
3 - INPUT GEAR

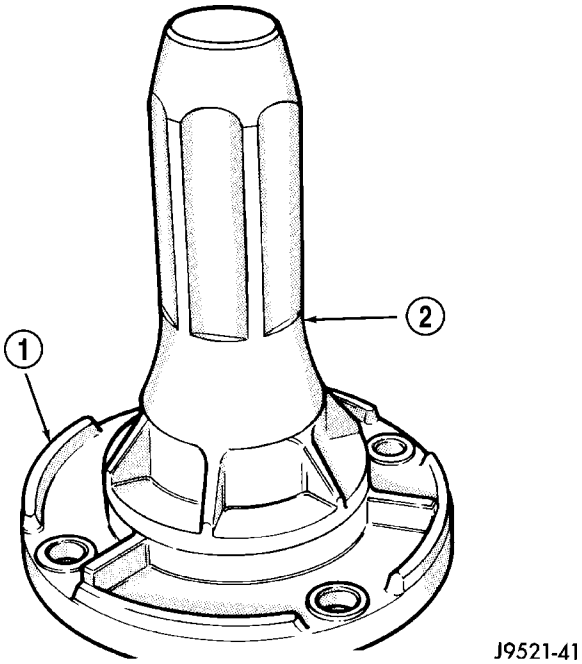

Fig. 59 Install Front Bearing Retainer Seal

1 - FRONT BEARING RETAINER
2 - SPECIAL TOOL 7884

TRANSFER CASE - NV231 (Continued)

(18) Install new seal in oil pump housing with Installer 7888 (Fig. 60).

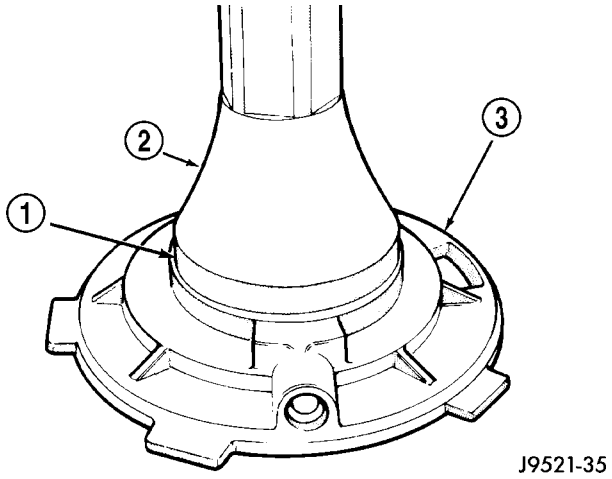

Fig. 60 Oil Pump Seal Installation

1 - HOUSING SEAL
2 - SPECIAL TOOL 7888
3 - OIL PUMP FEED HOUSING

(19) Remove rear retainer bearing with Installer 8128 and Handle C-4171.

(20) Install rear bearing in retainer with Handle C-4171 and Installer 5052 (Fig. 61).

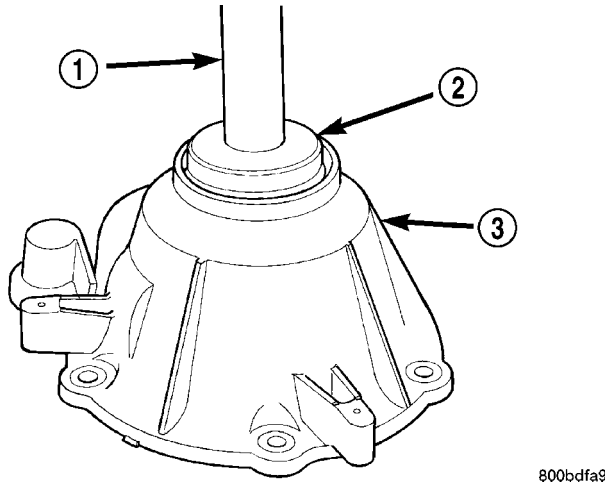

Fig. 61 Installing Rear Bearing In Retainer

1 - SPECIAL TOOL C-4171
2 - SPECIAL TOOL 5052
3 - REAR RETAINER

INPUT AND LOW RANGE GEAR

(1) Install first thrust washer in low range gear (Fig. 62). Be sure washer tabs are properly aligned in gear notches.

(2) Install input gear in low range gear. Be sure input gear is fully seated.

(3) Install remaining thrust washer in low range gear and on top of input gear. Be sure washer tabs are properly aligned in gear notches.

(4) Install retainer on input gear and install snap-ring.

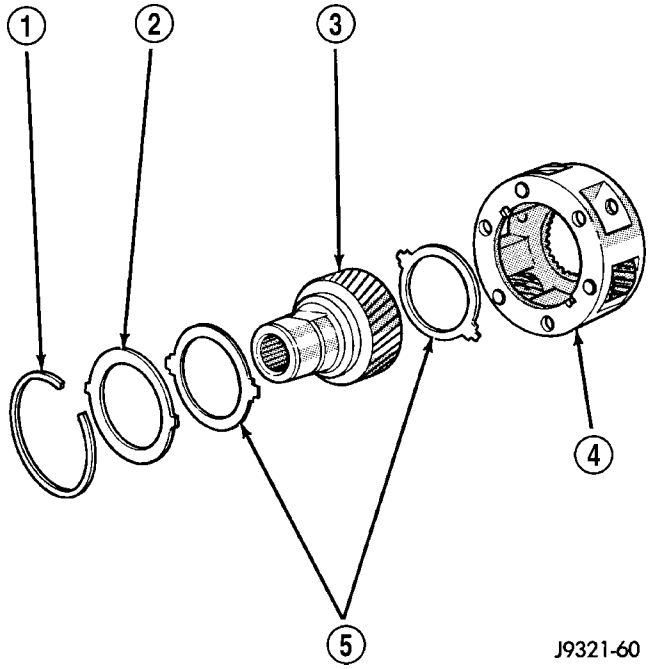

Fig. 62 Input/Low Range Gear Components

1 - SNAP-RING
2 - RETAINER PLATE
3 - INPUT GEAR
4 - LOW RANGE GEAR
5 - THRUST WASHERS

(5) Align and install low range/input gear assembly in front case (Fig. 63). Be sure low range gear pinions are engaged in annulus gear and that input gear shaft is fully seated in front bearing.

(6) Install snap-ring to hold input/low range gear into front bearing (Fig. 64).

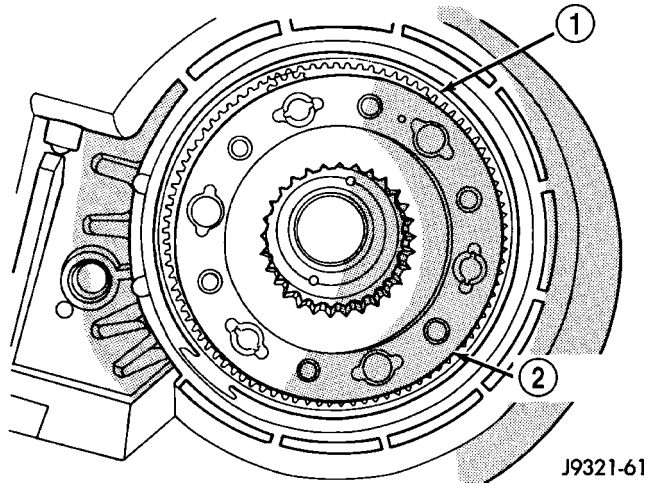

Fig. 63 Input/Low Range Gear Installation

1 - ANNULUS GEAR
2 - INPUT/LOW RANGE GEAR

TRANSFER CASE - NV231 (Continued)

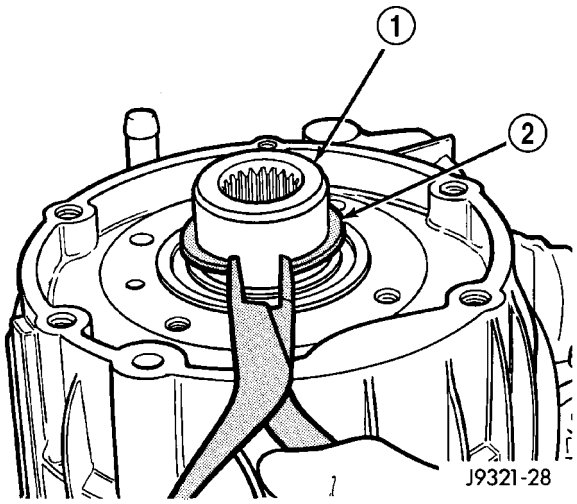

Fig. 64 Install Snap-Ring

1 - INPUT GEAR
2 - SNAP-RING

(7) Clean gasket sealer residue from retainer and inspect retainer for cracks or other damage.

(8) Apply a 3 mm (1/8 in.) bead of Mopar® gasket maker or silicone adhesive to sealing surface of retainer.

(9) Align cavity in seal retainer with fluid return hole in front of case.

CAUTION: Do not block fluid return cavity on sealing surface of retainer when applying Mopar® gasket maker or silicone adhesive sealer. Seal failure and fluid leak can result.

(10) Install bolts to hold retainer to transfer case (Fig. 65). Tighten to 21 N·m (16 ft. lbs.) of torque.

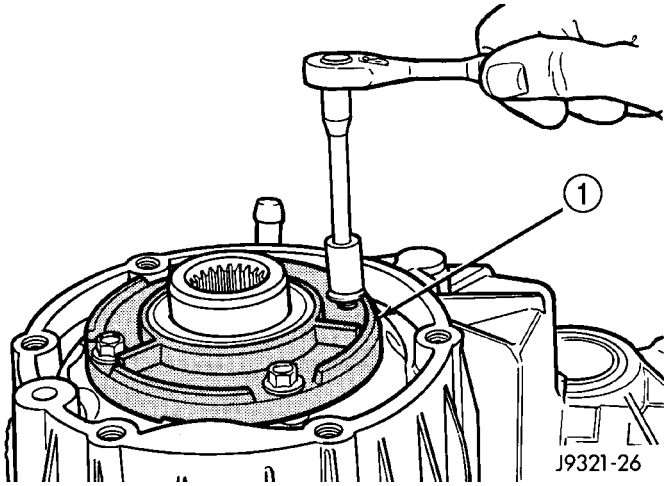

Fig. 65 Install Front Bearing Retainer

1 - FRONT BEARING RETAINER

MAINSHAFT

(1) Lubricate mainshaft splines with recommended transmission fluid.

(2) Slide drive sprocket onto mainshaft.

(3) Slide mode hub onto mainshaft.

(4) Install mode hub retaining ring. Verify that the retaining ring is fully seated in mainshaft groove.

SHIFT FORKS, SECTOR, AND MAINSHAFT

(1) Install the shift sector shaft bearing using a suitable socket until the bearing is flush to the bottom, inner edge of the bore (Fig. 66).

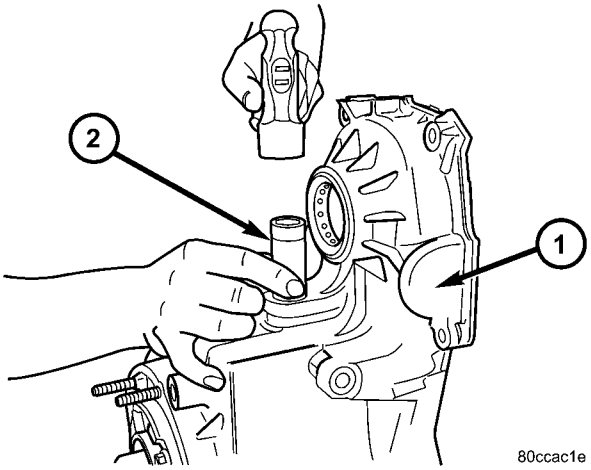

Fig. 66 Install Shift Sector Shaft Bearing

1 - TRANSFER CASE
2 - SOCKET

(2) Install a new shift sector shaft seal using a suitable socket until the seal is flush to the bottom of the bore lead-in chamfer.

TRANSFER CASE - NV231 (Continued)

(3) Install shift sector in case (Fig. 67). Lubricate sector shaft with transmission fluid before installation.

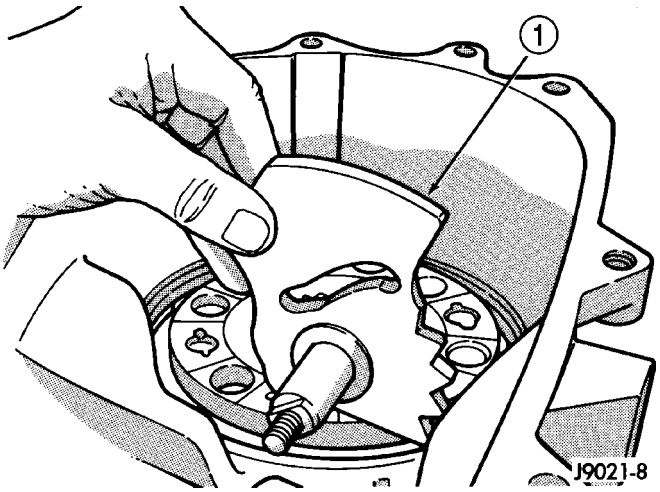

Fig. 67 Shift Sector Installation

1 - SHIFT SECTOR

(4) Assemble and install range fork and hub (Fig. 68). Be sure hub is properly seated in low range gear and engaged to the input gear.

(5) Align and insert range fork pin in shift sector slot.

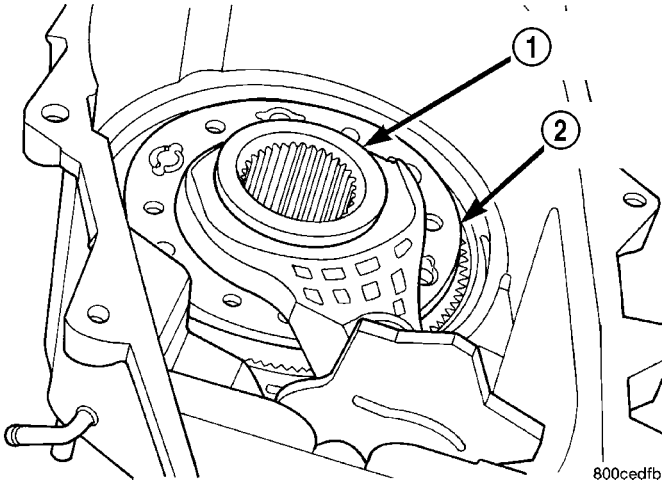

Fig. 68 Install Range Fork And Sleeve Assembly

1 - RANGE SLEEVE
2 - RANGE FORK

(6) Install assembled mainshaft (Fig. 69). Be sure shaft is seated in pilot bearing and input gear.

(7) Install new pads on mode fork if necessary.

(8) Insert mode sleeve in mode fork mode fork. Be sure long side of sleeve is toward long end of shift rail (Fig. 70).

(9) Install assembled mode fork and sleeve (Fig. 71). Be sure fork rail goes through range fork and

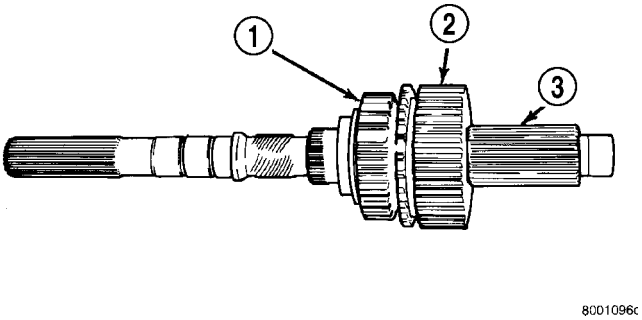

Fig. 69 Mainshaft Assembly Installation

1 - DRIVE SPROCKET
2 - MODE HUB
3 - MAINSHAFT

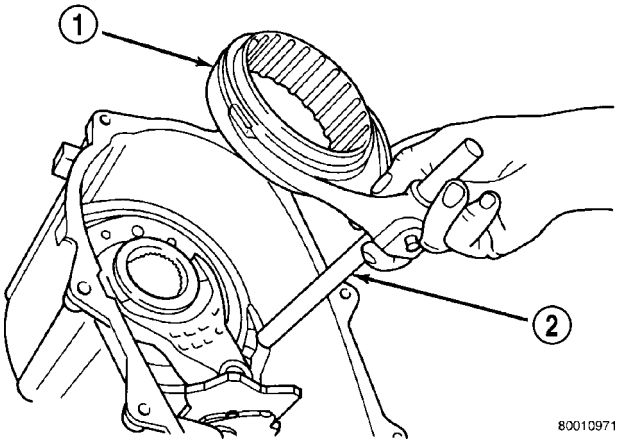

Fig. 70 Assembling Mode Fork And Sleeve

1 - MODE SLEEVE
2 - MODE FORK AND RAIL

into case bore. Also be sure sleeve is aligned and seated on mainshaft hub.

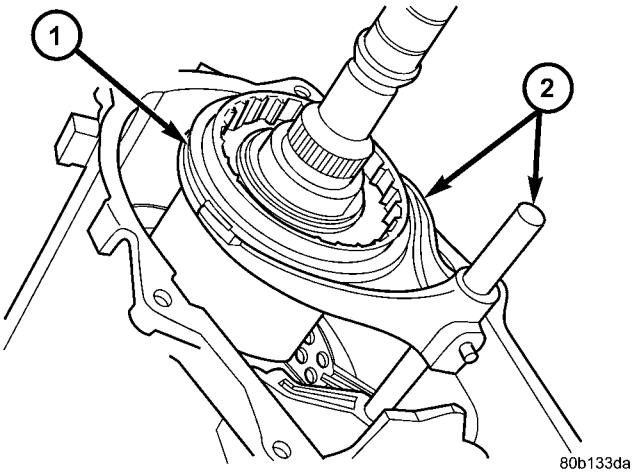

Fig. 71 Mode Fork And Sleeve Installation

1 - MODE SLEEVE
2 - MODE FORK AND RAIL

TRANSFER CASE - NV231 (Continued)

(10) Rotate sector to NEUTRAL position.

(11) Install new O-ring on detent plug (Fig. 72).

(12) Lubricate detent plunger with transmission fluid or light coat of petroleum jelly.

(13) Install detent plunger, spring and plug (Fig. 72).

(14) Verify that plunger is properly engaged in sector.

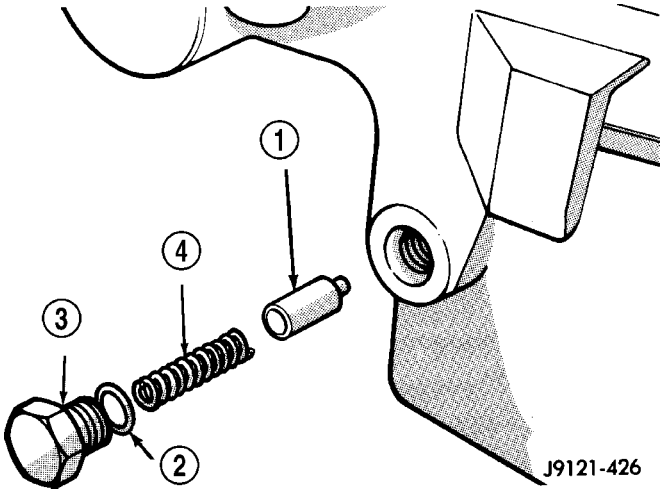

Fig. 72 Detent Plug, Spring, And Plunger Installation

1 - PLUNGER
2 - O-RING
3 - PLUG
4 - SPRING

FRONT OUTPUT SHAFT AND DRIVE CHAIN

(1) Lubricate front output shaft-sprocket assembly, drive chain, and drive sprocket with transmission fluid.

(2) Assemble drive chain and front output shaft (Fig. 73).

(3) Start chain on mainshaft drive sprocket.

(4) Guide front shaft into bearing and drive sprocket onto mainshaft drive gear (Fig. 73).

(5) Install mode spring on upper end of mode fork shift rail (Fig. 74).

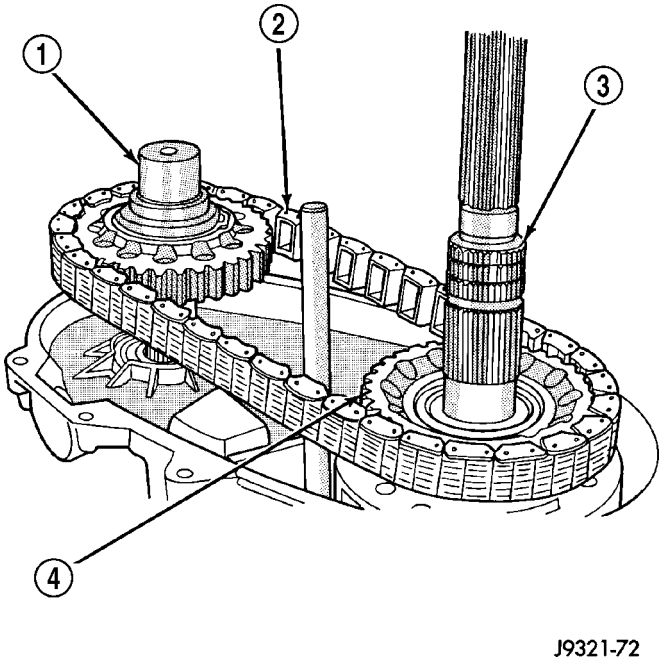

Fig. 73 Installing Drive Chain And Front Output Shaft

1 - FRONT OUTPUT SHAFT
2 - DRIVE CHAIN
3 - MAINSHAFT
4 - DRIVE SPROCKET

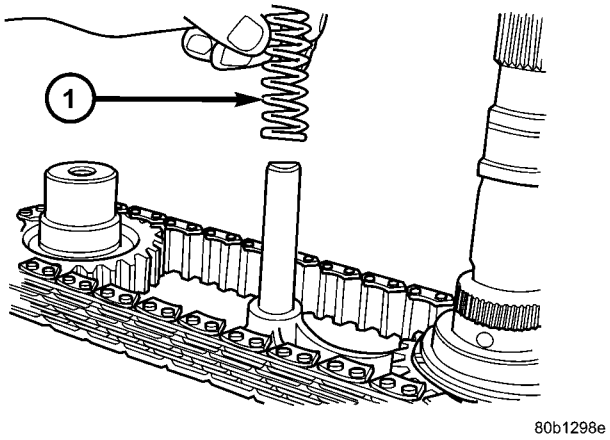

Fig. 74 Mode Fork Spring Removal

1 - MODE FORK SPRING

TRANSFER CASE - NV231 (Continued)

OIL PUMP AND REAR CASE

(1) Install magnet in front case pocket (Fig. 75).

(2) Assemble oil pickup screen, connecting hose, and tube.

(3) Install new pickup tube O-ring in oil pump (Fig. 76).

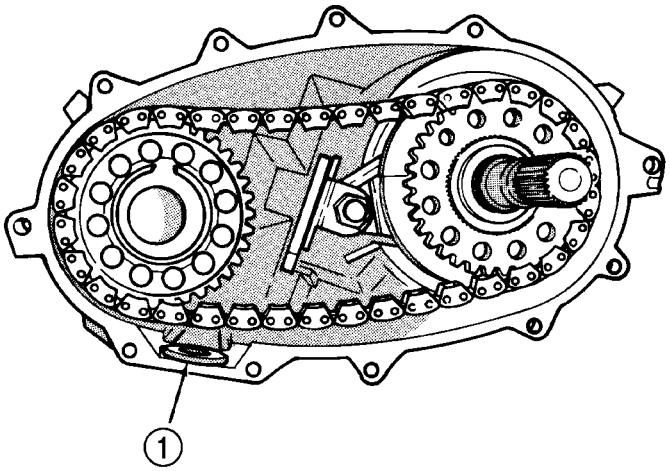

Fig. 75 Installing Case Magnet

1 - MAGNET

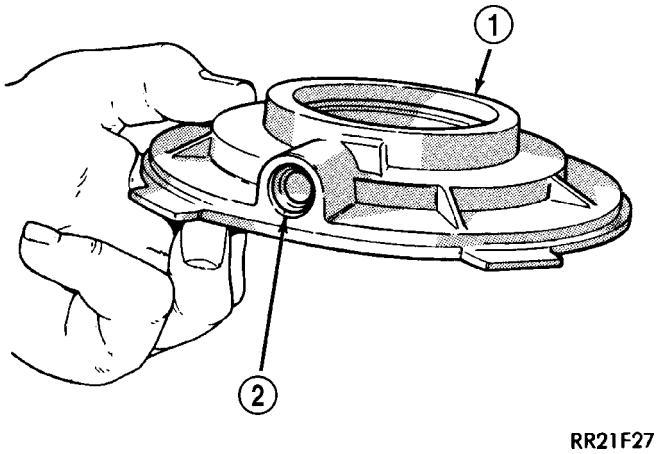

Fig. 76 Pickup Tube O-Ring Position

1 - OIL PUMP
2 - O-RING

(4) Insert oil pickup tube in oil pump inlet.

(5) Position assembled oil pump and pickup tube in rear case. Be sure pickup screen is securely seated in case slot. Also be sure oil pump locating tabs are outside rear case (Fig. 77).

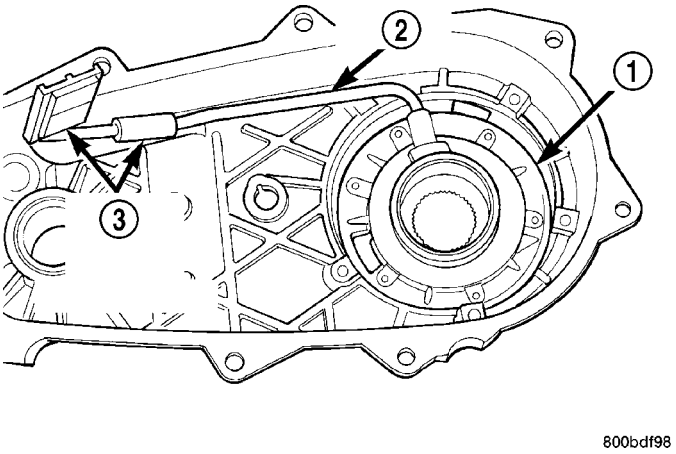

Fig. 77 Oil Pump And Pickup Tube Installation

1 - OIL PUMP
2 - PICKUP TUBE
3 - PICKUP SCREEN AND CONNECTOR

(6) Apply 3 mm (1/8 in.) wide bead of Mopar® gasket maker or silicone adhesive sealer to mounting flange of front case. Work sealer bead around bolt holes.

(7) Lift rear case and oil pump and carefully position assembly on front case. Be sure case dowels are aligned and that mode fork rail extends through rear case before seating rear case on front case.

(8) Install case attaching bolts. Alignment bolts at each end of case are only ones requiring washers (Fig. 78).

(9) Tighten case bolts to 27-34 N·m (20-25 ft. lbs.) torque.

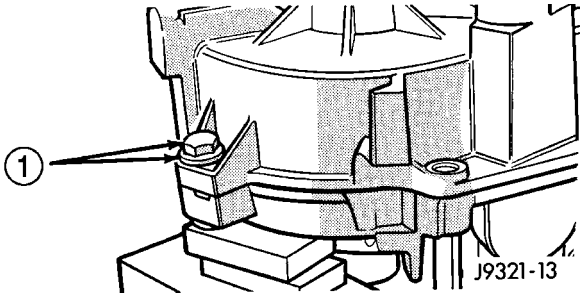

Fig. 78 Alignment Bolt Location

1 - ALIGNMENT BOLT AND WASHER (AT EACH END OF CASE)

TRANSFER CASE - NV231 (Continued)

COMPANION FLANGE AND RANGE LEVER

(1) Install range lever and bolt on sector shaft (Fig. 79). Tighten bolt to 27-34 N·m (20-25 ft. lbs.) torque.

(2) Inspect the o-ring on the transfer case position sensor. Replace the o-ring if necessary.

(3) Install the transfer case position sensor in the front case (Fig. 80). Tighten sensor to 20-34 N·m (15-25 ft. lbs.) torque.

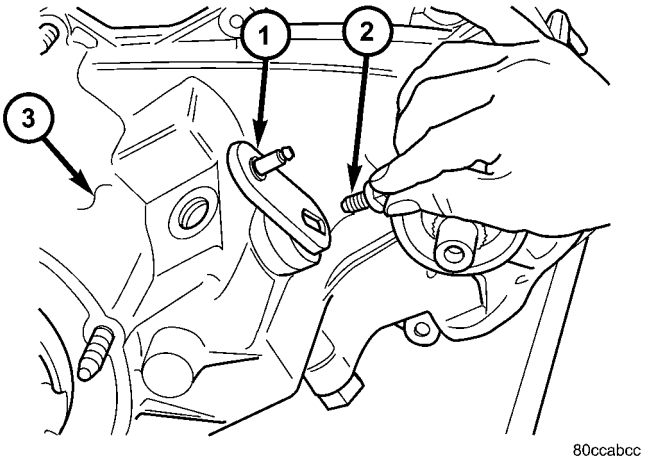

Fig. 79 Install Shift Lever Bolt

1 - RANGE LEVER
2 - RANGE LEVER BOLT
3 - TRANSFER CASE

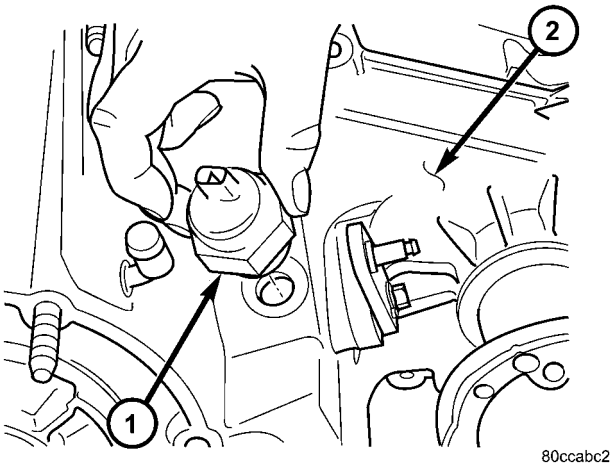

Fig. 80 Install Transfer Case Position Sensor

1 - TRANSFER CASE POSITION SENSOR
2 - TRANSFER CASE

(4) Install new seal washer on front output shaft (Fig. 81).

(5) Lubricate companion flange hub with transmission fluid and install flange onto the front output shaft.

(6) Install new seal washer on front shaft.

(7) Install new flange nut onto front output shaft.

(8) Tighten flange nut to 122-176 N·m (90-130 ft. lbs.) torque.

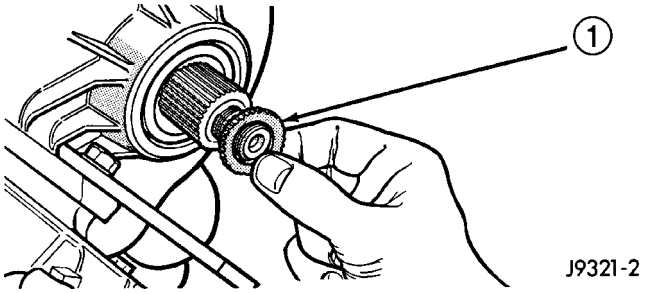

Fig. 81 Seal Washer Installation

1 - SEAL WASHER

REAR RETAINER

(1) Apply bead of Mopar® Sealer P/N 82300234, or Loctite™ Ultra Gray, to mating surface of rear retainer. Sealer bead should be a maximum of 3/16 inch.

(2) Install the forward rear output shaft bearing locating snap-ring.

(3) Install rear retainer on rear case. Tighten retainer bolts to 20-27 N·m (15-20 ft. lbs.) torque.

(4) Install rear bearing I.D. retaining ring onto output shaft.

(5) Apply liberal quantity of petroleum jelly to new rear seal and to output shaft. Petroleum jelly is needed to protect seal lips during installation.

(6) Slide seal onto Seal Protector 8824 (Fig. 82). Slide seal protector and seal onto output shaft.

(7) Slide Installer 8691 onto seal and mainshaft. Drive seal into rear bearing retainer (Fig. 83).

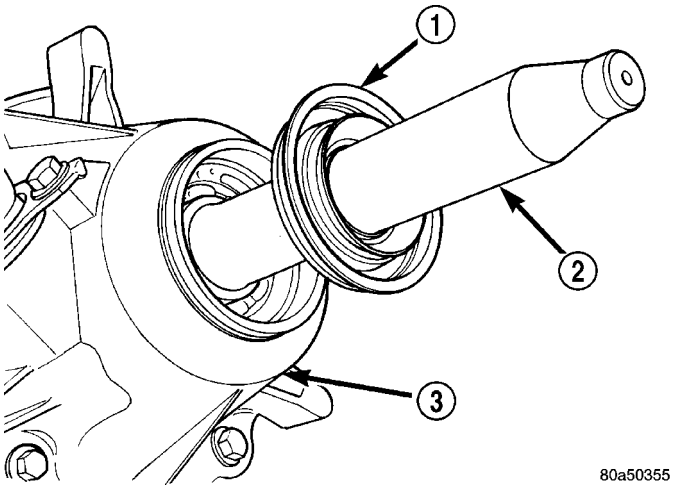

Fig. 82 Output Shaft Seal and Protector

1 - OUTPUT SHAFT SEAL
2 - SPECIAL TOOL 8824
3 - TRANSFER CASE

(8) Install a new output shaft rear slinger with Installer 9023.

TRANSFER CASE - NV231 (Continued)

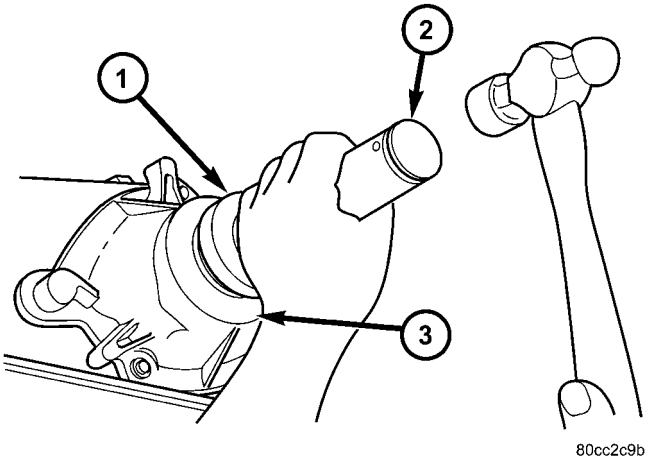

Fig. 83 Rear Seal Installation

1 - SPECIAL TOOL 8691
2 - HANDLE
3 - TRANSFER CASE

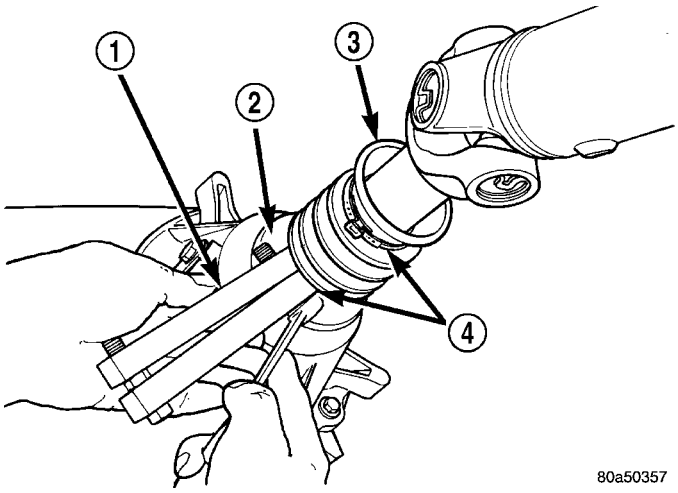

Fig. 84 Slinger Boot Installation - Typical

1 - SPECIAL TOOL C-4975-A
2 - SLINGER
3 - BOOT
4 - CLAMP

(9) Install boot on output shaft slinger and crimp retaining clamp with tool C-4975-A (Fig. 84).

INSTALLATION

(1) Mount transfer case on a transmission jack.
(2) Secure transfer case to jack with chains.
(3) Position transfer case under vehicle.
(4) Align transfer case and transmission shafts and install transfer case on transmission.
(5) Install and tighten transfer case attaching nuts to 35 N·m (26 ft. lbs.) torque.
(6) Connect vent hose.
(7) Connect transfer case position sensor connector to sensor.
(8) Align and connect propeller shafts. (Refer to 3 - DIFFERENTIAL & DRIVELINE/PROPELLER SHAFT/PROPELLER SHAFT - INSTALLATION).
(9) Fill transfer case with correct fluid. Check transmission fluid level. Correct as necessary.
(10) Install skid plate. (Refer to 13 - FRAME & BUMPERS/FRAME/TRANSFER CASE SKID PLATE - INSTALLATION)
(11) Remove transmission jack and support stand.
(12) Connect shift cable to transfer case range lever.
(13) Lower vehicle and verify transfer case shift operation.

SPECIFICATIONS

TRANSFER CASE - NV231

TORQUE

DESCRIPTION	N·m	Ft. Lbs.	In. Lbs.
Plug, Detent	16-24	12-18	-
Plug, Drain/Fill	20-34	15-25	-
Bolt, Front Brg. Retainer	21	16	-
Bolt, Case Half	27-34	20-25	-
Nut, Front Companion Flange	122-176	90-130	-
Bolt, Range Lever	27-34	20-25	-
Bolt, Rear Retainer	35-46	26-34	-
Nuts, Mounting	35-47	26-35	-
Sensor, Transfer Case Position	20-34	15-25	-

TRANSFER CASE - NV231 (Continued)

SPECIAL TOOLS

TRANSFER CASE - NV231

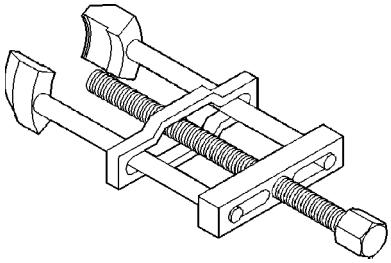

Puller, Slinger - MD-998056-A

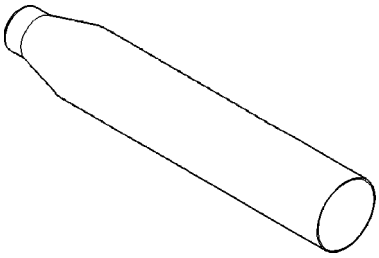

Protector, Seal - 8824

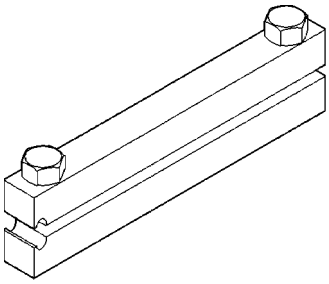

Installer, Boot Clamp - C-4975-A

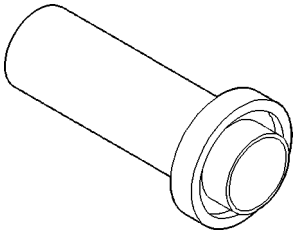

Installer, Seal - 8143-A

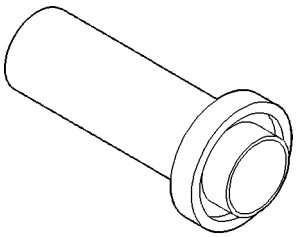

Installer, Seal - 8691

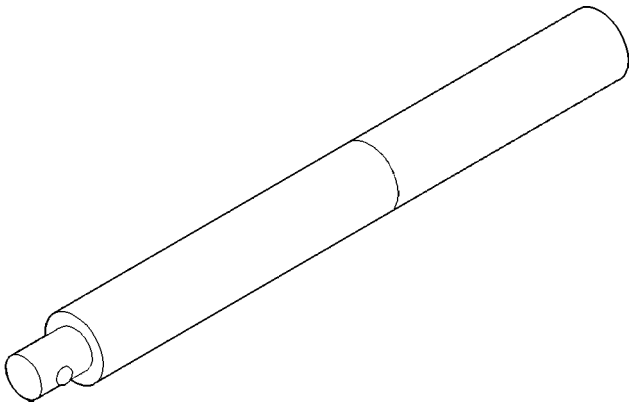

Handle, Universal - C-4171

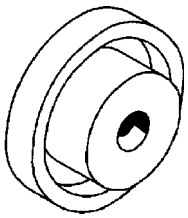

Installer, Seal - C-4210

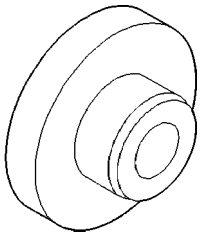

Installer, Bearing - 5052

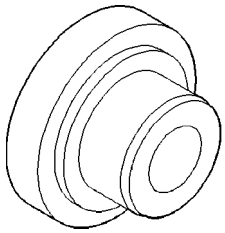

Installer, Bearing - 5065

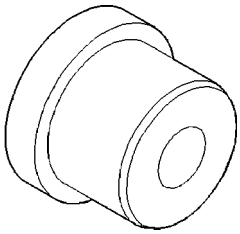

Installer, Bushing - 5066

FLUID (Continued)

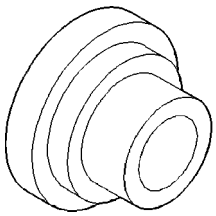

Installer, Bearing - 8128

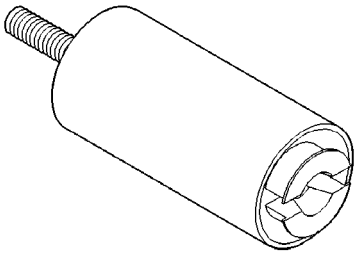

Remover - L-4454

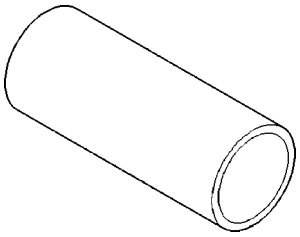

Cup - 8148

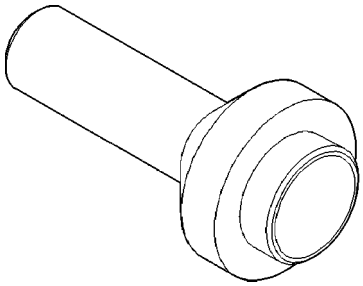

Installer, Seal - 7884

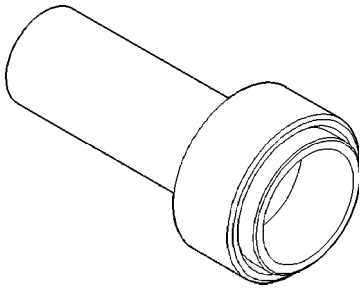

Installer, Pump Housing Seal - 7888

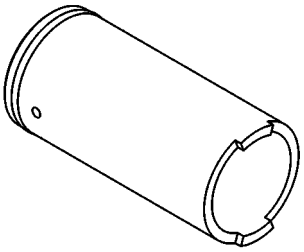

Installer, Output Shaft Slinger - 8408

FLUID

STANDARD PROCEDURE - FLUID DRAIN AND FILL

The fill and drain plugs are both in the rear case (Fig. 85). Correct fill level is to the bottom edge of the fill plug hole. Be sure the vehicle is level to ensure an accurate fluid level check.

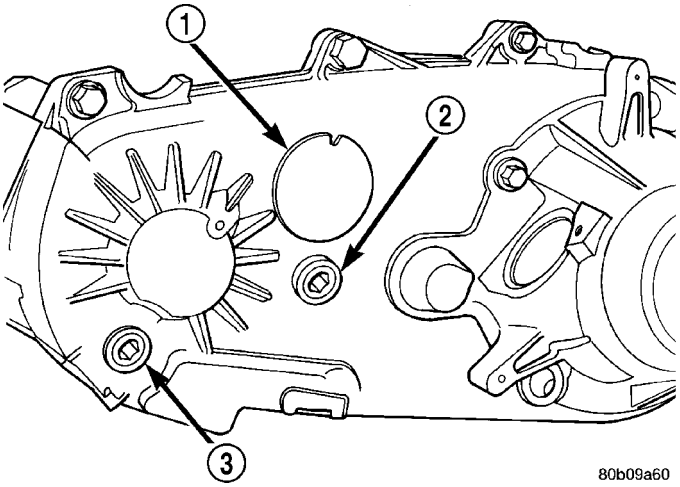

Fig. 85 Fill/Drain Plug and I.D. Tag Location - Typical

1 - I.D. TAG
2 - FILL PLUG
3 - DRAIN PLUG

FRONT OUTPUT SHAFT SEAL

REMOVAL

(1) Raise vehicle.

(2) Remove front propeller shaft. (Refer to 3 - DIFFERENTIAL & DRIVELINE/PROPELLER SHAFT/ PROPELLER SHAFT - REMOVAL)

(3) Remove front output shaft companion flange.

(4) Remove seal from front case with pry tool (Fig. 86).

INSTALLATION

(1) Install new front output seal in front case with Installer Tool 8143-A as follows:

(a) Place new seal on tool. Garter spring on seal goes toward interior of case.

(b) Start seal in bore with light taps from hammer (Fig. 87). Once seal is started, continue tapping seal into bore until installer tool seats against case.

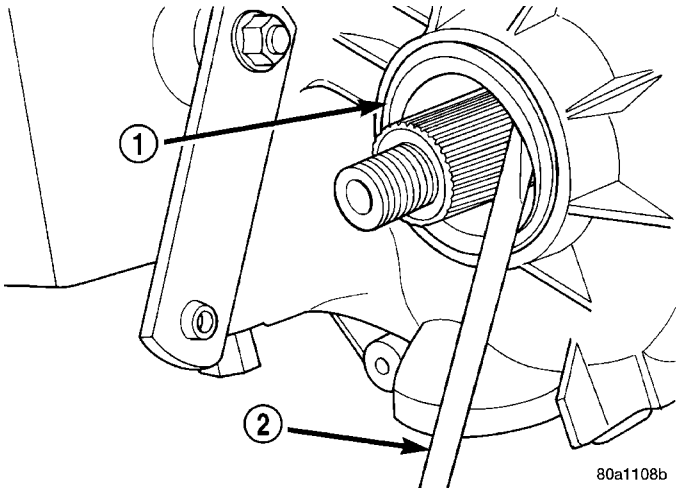

Fig. 86 Remove Front Output Shaft Seal - Typical

1 - OUTPUT SHAFT SEAL
2 - PRYBAR

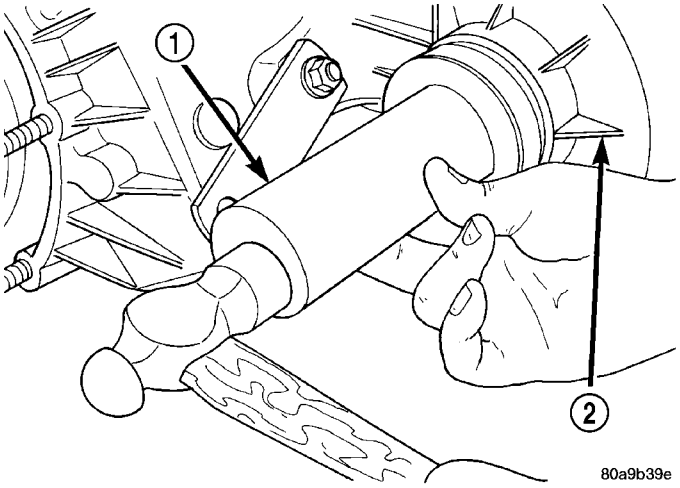

Fig. 87 Front Output Seal Installation - Typical

1 - INSTALLER 8143-A
2 - TRANSFER CASE

(2) Install the front output shaft companion flange.

(3) Install the front propeller shaft. (Refer to 3 - DIFFERENTIAL & DRIVELINE/PROPELLER SHAFT/PROPELLER SHAFT - INSTALLATION)

POSITION SENSOR

DESCRIPTION

The transfer case position sensor (Fig. 88) is an electronic device whose output can be interpreted to indicate the transfer case's current operating mode. The sensor consists of a five position, resistive multiplexed circuit which returns a specific resistance value to the Powertrain Control Module (PCM) for each transfer case operating mode. The sensor is located on the top of the transfer case, just left of the transfer

POSITION SENSOR (Continued)

case centerline and rides against the sector plate roostercomb. The PCM supplies 5VDC (+/- 0.5V) to the sensor and monitors the return voltage to determine the sector plate, and therefore the transfer case, position.

OPERATION

During normal vehicle operation, the Powertrain Control Module (PCM) monitors the transfer case position sensor return voltage to determine the operating mode of the transfer case. Refer to the Operating Mode Versus Resistance table for the correct resistance for each position (Fig. 89). Note that the NEUTRAL position is allowed to float between sensor positions 3 and 4. If a resistance is measured anywhere in either range, the sensor is operating correctly.

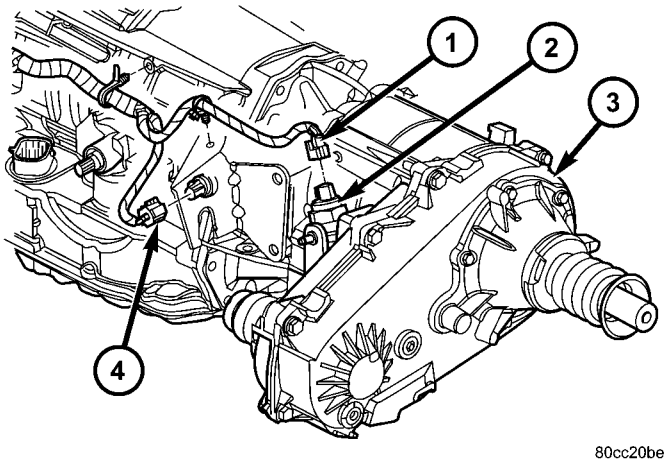

Fig. 88 Transfer Case Position Sensor and Connector

1 - TRANSFER CASE POSITION SENSOR CONNECTOR
2 - TRANSFER CASE POSITION SENSOR
3 - TRANSFER CASE
4 - OUTPUT SPEED SENSOR CONNECTOR

OPERATING MODE VERSUS RESISTANCE

SENSOR POSITION	OPERATING MODE	SENSOR RESISTANCE (ohms)
1	2WD	1124-1243
2	4WD PART TIME	650-719
3	NEUTRAL	389-431
4	NEUTRAL	199-221
5	4WD LOW	57-64

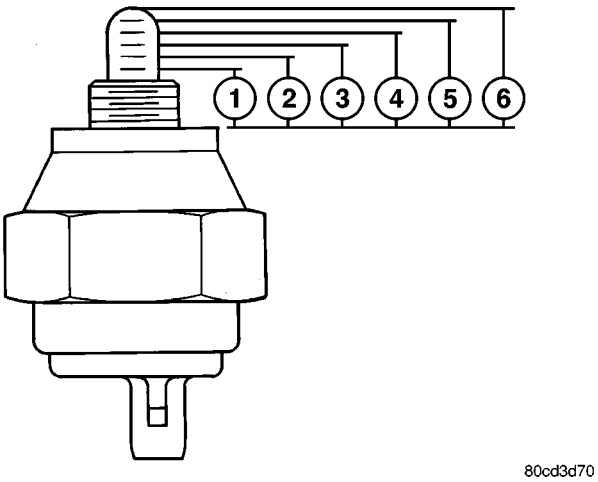

Fig. 89 Position Sensor Linear Movement

1 - POSITION 1 - 10mm ±0.5mm
2 - POSITION 2 - 12mm ±0.5mm
3 - POSITION 3 - 14mm ±0.5mm
4 - POSITION 4 - 16mm ±0.5mm
5 - POSITION 5 - 18mm ±0.5mm
6 - POSITION 6 - 20mm±0.5mm - FULL EXTENSION

REMOVAL

(1) Raise and support the vehicle.

(2) Disengage the transfer case position sensor connector from the position sensor (Fig. 90).

(3) Remove the position sensor from the transfer case.

POSITION SENSOR (Continued)

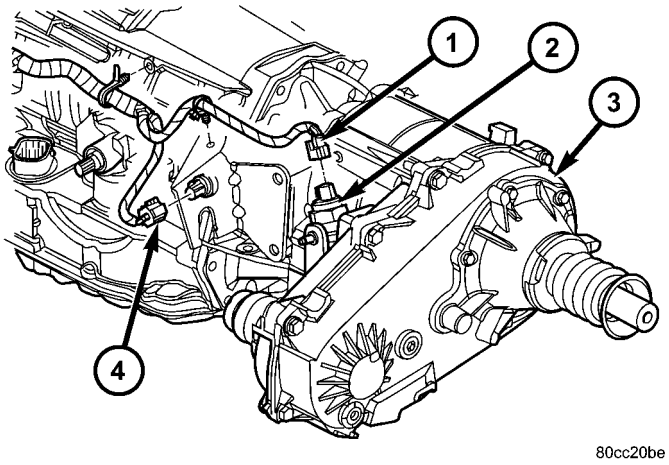

Fig. 90 Transfer Case Position Sensor and Connector

1 - TRANSFER CASE POSITION SENSOR CONNECTOR
2 - TRANSFER CASE POSITION SENSOR
3 - TRANSFER CASE
4 - OUTPUT SPEED SENSOR CONNECTOR

INSTALLATION

(1) Inspect the o-ring seal on the transfer case position sensor. Replace the o-ring if necessary.

(2) Install the transfer case position sensor into the transfer case. Torque the sensor to 20-34 N·m (15-25 ft.lbs.).

(3) Engage the transfer case position sensor connector to the position sensor.

(4) Lower vehicle.

(5) Verify proper sensor operation.

REAR OUTPUT SHAFT SEAL

REMOVAL

(1) Shift the transmission and transfer case into NEUTRAL.

(2) Raise and support vehicle.

(3) Mark a line across the pinion shaft and at each end of the propeller shaft for installation reference.

(4) Remove the U-joint strap bolts at the pinion shaft yoke.

(5) Pry open clamp holding the dust boot to propeller shaft yoke (Fig. 91).

(6) Slide the slip yoke off of the transmission/transfer case output shaft and remove the propeller shaft.

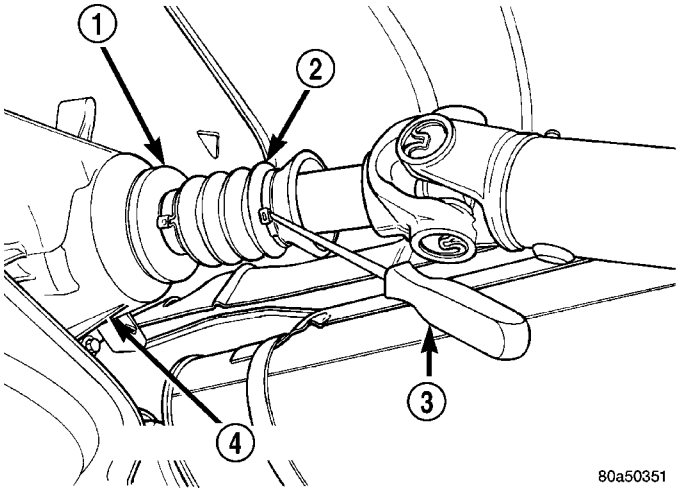

Fig. 91 Dust Boot Clamp

1 - SLINGER
2 - BOOT
3 - AWL
4 - TRANSFER CASE

(7) Spread band clamp which holds output shaft boot to the output shaft slinger with a suitable awl, or equivalent.

(8) Remove output shaft boot from slinger and output shaft.

(9) Remove the output shaft rear slinger using Puller MD-998056-A (Fig. 92).

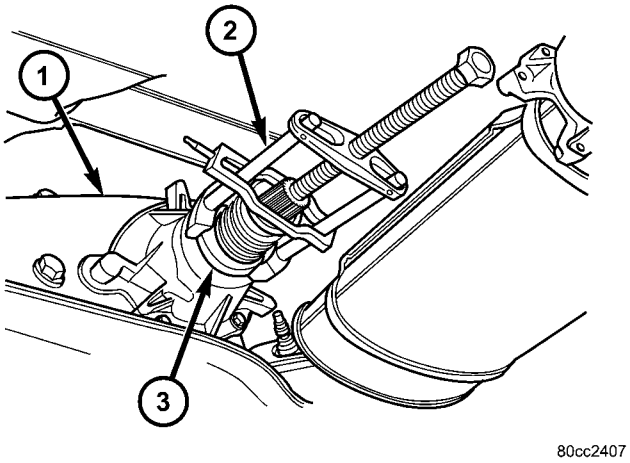

Fig. 92 Rear Slinger Removal

1 - TRANSFER CASE
2 - PULLER MD-998056-A
3 - REAR SLINGER

REAR OUTPUT SHAFT SEAL (Continued)

(10) Use a suitable pry tool, or a slide hammer mounted screw, to remove the seal from the rear retainer (Fig. 93).

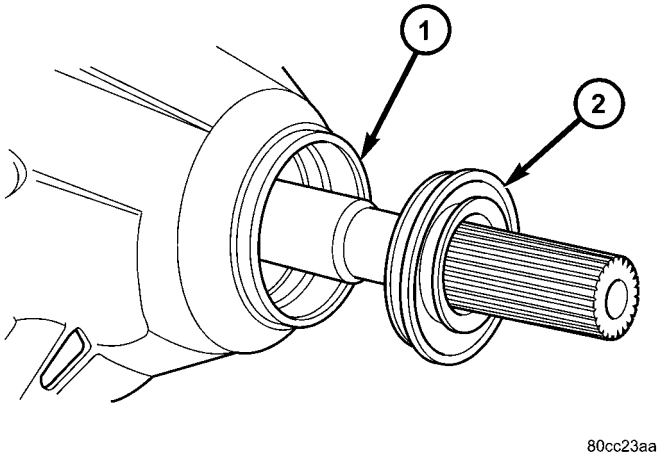

Fig. 93 Rear Retainer Seal

1 - REAR RETAINER
2 - OUTPUT SHAFT SEAL

INSTALLATION

(1) Apply liberal quantity of petroleum jelly to new rear seal and to output shaft. Petroleum jelly is needed to protect seal lips during installation.

(2) Slide seal onto Seal Protector 8824 (Fig. 94). Slide seal protector and seal onto output shaft.

(3) Slide Installer 8691 onto seal and mainshaft. Drive seal into rear bearing retainer (Fig. 95).

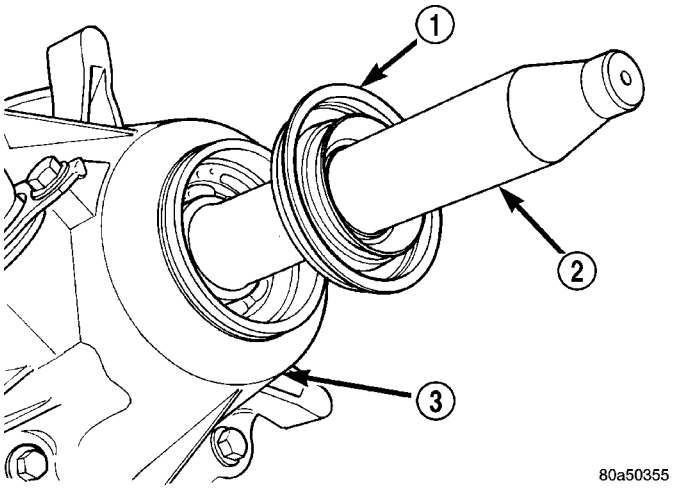

Fig. 94 Output Shaft Seal and Protector

1 - OUTPUT SHAFT SEAL
2 - SPECIAL TOOL 8824
3 - TRANSFER CASE

(4) Install a new output shaft rear slinger with Installer 9023.

(5) Install boot on output shaft slinger and crimp retaining clamp with tool C-4975-A (Fig. 96).

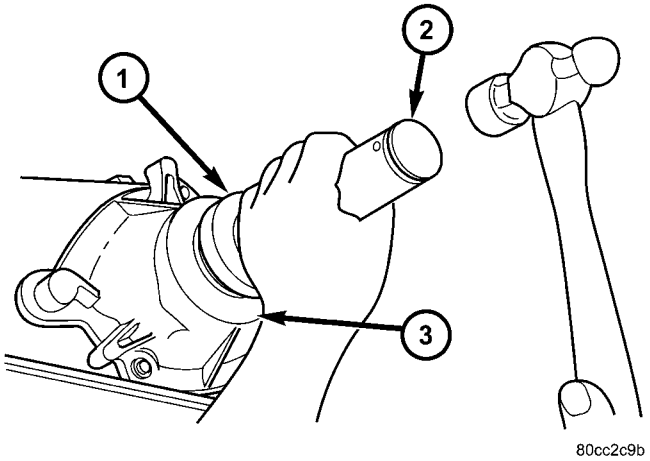

Fig. 95 Rear Seal Installation

1 - SPECIAL TOOL 8691
2 - HANDLE
3 - TRANSFER CASE

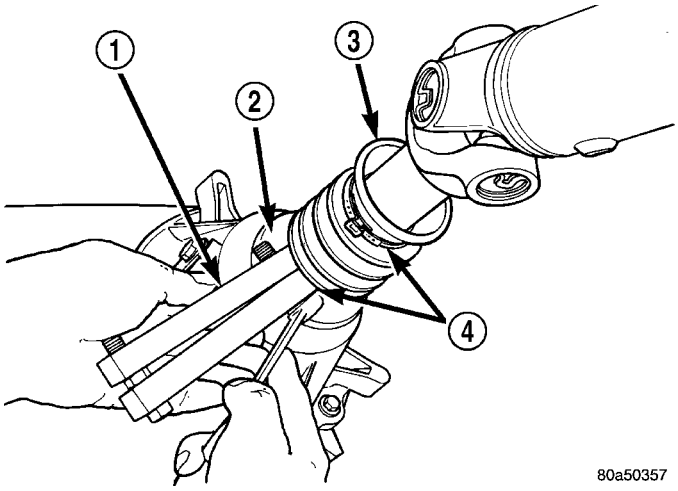

Fig. 96 Slinger Boot Installation - Typical

1 - SPECIAL TOOL C-4975-A
2 - SLINGER
3 - BOOT
4 - CLAMP

(6) Slide the slip yoke on the transmission/transfer case output shaft. Align installation reference marks at the axle yoke and install the propeller shaft.

(7) Tighten the U-joint strap/clamp bolts at the axle yoke to 19 N·m (14 ft. lbs.).

(8) Crimp clamp with Clamp Tool C-4975A to hold dust boot to propeller shaft yoke.

(9) Remove support and lower the vehicle.

SHIFT LEVER

REMOVAL

(1) Shift transfer case into 4L.

(2) Raise vehicle.

(3) Remove clip securing the transfer case shift cable to the shift cable support bracket (Fig. 97) and (Fig. 98).

(4) Disengage any additional shift cable routing clips, if necessary.

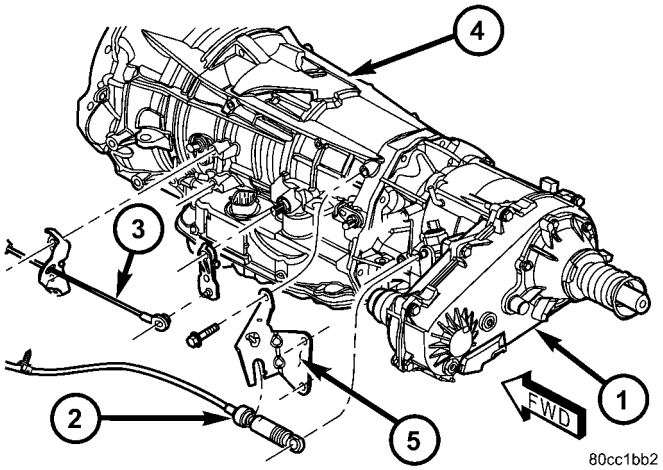

Fig. 97 Transfer Case Shift Cable - Automatic Transmission

1 - TRANSFER CASE
2 - TRANSFER CASE SHIFT CABLE
3 - TRANSMISSION SHIFT CABLE
4 - AUTOMATIC TRANSMISSION
5 - TRANSFER CASE SHIFT CABLE BRACKET

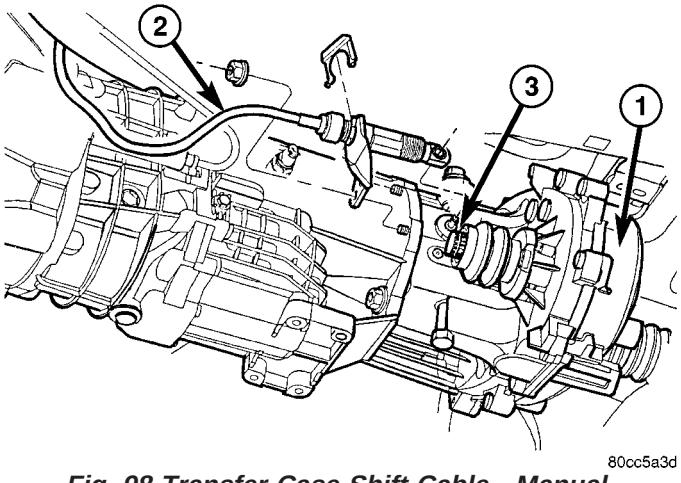

Fig. 98 Transfer Case Shift Cable - Manual Transmission

1 - TRANSFER CASE
2 - SHIFT CABLE
3 - MANUAL LEVER

(5) Disengage the shift cable from the transfer case manual lever.

(6) Lower vehicle.

(7) Remove the floor console as necessary to access the shifter mechanism. (Refer to 23 - BODY/INTERIOR/FLOOR CONSOLE - REMOVAL)

(8) Remove the nuts attaching lever assembly to floorpan and remove assembly and shift cable (Fig. 99).

(9) Remove the shifter mechanism and cable assembly from the vehicle.

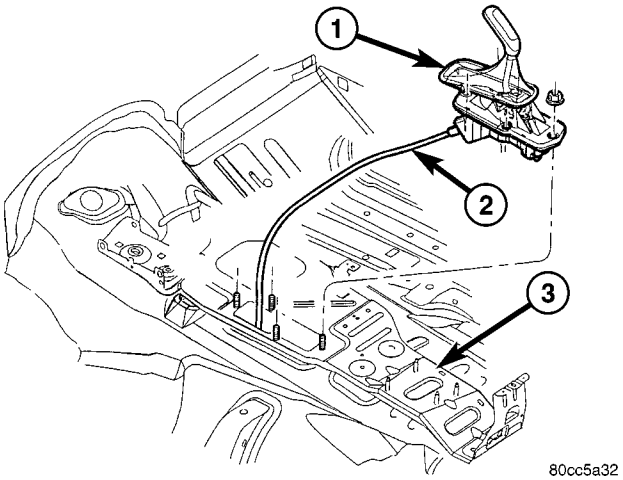

Fig. 99 Transfer Case Shifter Assembly

1 - SHIFTER ASSEMBLY
2 - SHIFT CABLE
3 - FLOOR PAN

INSTALLATION

(1) Route the shift cable through the opening in the floor pan.

(2) Position the shift mechanism over the shifter retaining studs on the floor pan.

(3) Install the nuts to hold the shifter mechanism to the floor pan. Tighten the nuts to 11.86 N·m (105 in.lbs.).

(4) Install any floor console components previously removed. (Refer to 23 - BODY/INTERIOR/FLOOR CONSOLE - INSTALLATION)

(5) Verify that the floor shifter is in the 4L position.

(6) Raise vehicle.

(7) Route the shift cable through the opening in the shift cable support bracket.

(8) Install the cable and a new spring clip into the slot in the support bracket.

(9) Install any additional routing clips on the shift cable.

(10) Verify that the transfer case is in the 4L position. The 4L position for the transfer case is with the manual lever to the full rearward position.

(11) Attach the shift cable to the transfer case manual lever.

(12) Lower vehicle and check for proper transfer case shifter operation.

TRANSFER CASE - NV241 GENII

TABLE OF CONTENTS

page

TRANSFER CASE - NV241 GENII
DESCRIPTION 315
OPERATION 315
DIAGNOSIS AND TESTING - TRANSFER CASE - NV241 GENII 316
REMOVAL 318
DISASSEMBLY 319
CLEANING 327
INSPECTION 327
ASSEMBLY 329
INSTALLATION 339
SPECIFICATIONS
TRANSFER CASE - NV241 GENII 340
SPECIAL TOOLS
TRANSFER CASE - NV241 GENII 341
EXTENSION HOUSING SEAL
REMOVAL 343
INSTALLATION 343
FLUID
STANDARD PROCEDURE - FLUID DRAIN AND FILL 343
FRONT OUTPUT SHAFT SEAL
REMOVAL 343
INSTALLATION 344
POSITION SENSOR
DESCRIPTION 344
OPERATION 344
REMOVAL 345
INSTALLATION 345
SHIFT LEVER
REMOVAL 345
INSTALLATION 346

TRANSFER CASE - NV241 GENII

DESCRIPTION

The NV241 GENII transfer case is a part-time transfer case with a low-range gear system. It provides three operating ranges plus a NEUTRAL position. The low range position provides a gear reduction ratio of 2.72:1 for increased low speed torque capability.

The gear cases and extension are all of aluminum. Drive sprockets and an interconnecting drive chain are used to transmit engine torque to the front/rear propeller shafts. The mainshaft, input gear and front output shaft are supported by ball and needle bearings.

IDENTIFICATION

An identification tag (2) (Fig. 1) is attached to the rear case of every transfer case. The tag provides the transfer case model number, assembly number, serial number, and low range ratio.

The transfer case serial number also represents the date of build.

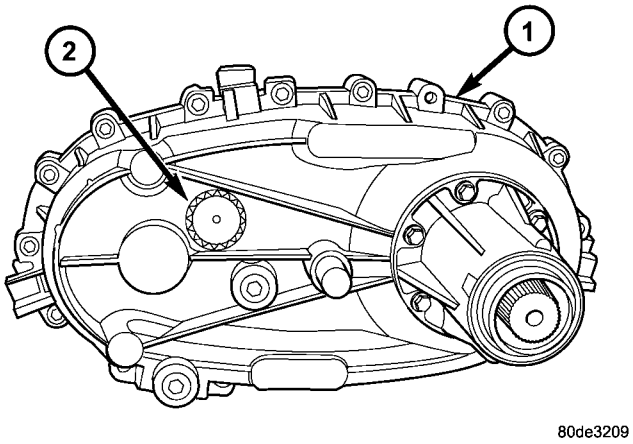

Fig. 1 Transfer Case - Rear View

1 - TRANSFER CASE
2 - IDENTIFICATION TAG

OPERATION

OPERATING RANGE

Transfer case operating ranges are:

- 2H (2-wheel drive)
- 4H (4-wheel drive)
- 4LO (4-wheel drive low range

The 2H range is for use on any road surface at any time.

The 4H and 4LO ranges are for off road use only. They are not for use on hard surface roads. The only exception being when the road surface is covered by ice and snow.

The low range reduction gear system is operative in 4LO range only. This range is for extra pulling

power in off road situations. Low range reduction ratio is 2.72:1.

SHIFT MECHANISM

Operating ranges are selected with a floor mounted shift lever. The shift lever is connected to the transfer case range lever by a shift cable. A straight line shift pattern is used. Range positions are marked on the shifter knob bezel.

SHIFTING

The transfer case can be shifted between the 2H and 4H operating ranges while the vehicle is in motion. The vehicle must have the transmission placed in NEUTRAL, or the clutch depressed in the case of a manual transmission, and be moving less than 2-3 MPH when shifting into and out of the 4L operating range.

DIAGNOSIS AND TESTING - TRANSFER CASE - NV241 GENII

Before beginning repair on a suspected transfer case malfunction, check all other driveline components beforehand.

The actual cause of a problem may be related to such items as: front hubs, axles, propeller shafts, wheels and tires, transmission, or clutch instead. If all other driveline components are in good condition and operating properly, refer to the Diagnosis Chart for further information.

DIAGNOSIS CHART

Condition	Possible Cause	Correction
Transfer Case difficult to shift or will not shift into desired range.	1) Vehicle speed too great to permit shifting.	1) Stop vehicle and shift into desired range. Or, reduce speed to below 3-4 km/h (2-3 mph) before attempting the shift.
	2) If vehicle was operated for an extended period in 4H on a dry paved surface, the driveline torque load may be causing a bind.	2) Stop vehicle and shift the transmission into neutral. Shift the transfer case to 2H and operate vehicle in 2H on dry paved surfaces.
	3) Transfer case external shift linkage binding.	3) Lubricate, repair, or replace linkage bushings, or tighten loose components as necessary.
	4) Insufficient or incorrect lubricant.	4) Drain and refill to edge of fill hole with Mopar® ATF +4, Automatic Transmission fluid.
	5) Internal components binding, worn, or damaged.	5) Disassemble the transfer case and replace worn or damaged components as necessary.
Transfer Case noisy in all operating ranges.	1) Insufficient or incorrect lubricant.	1) Drain and refill to edge of fill hole with Mopar® ATF +4, Automatic Transmission fluid.

TRANSFER CASE - NV241 GENII (Continued)

Condition	Possible Cause	Correction
Noisy in, or jumps out of, four wheel drive low range.	1) Transfer case not completely engaged in 4L position.	1) With the transmission in NEUTRAL, or the clutch depressed in the case of a manual transmission and the vehicle moving under 3-4 km/h (2-3 mph), shift the transfer case to NEUTRAL and then shift into the 4L position.
	2) Shift linkage out of adjustment.	2) Adjust linkage.
	3) Shift linkage loose or binding.	3) Tighten, lubricate, or repair linkage as necessary.
	4) Range fork damaged, inserts worn, or fork is binding on the shift rail.	4) Disassemble unit and repair as necessary.
	5) Low range gear worn or damaged.	5) Disassemble unit and repair as necessary.
Lubricant leaking from output shaft seal or vent.	1) Transfer case overfilled.	1) Drain lubricant to the correct level.
	2) Vent closed or restricted.	2) Clear or replace vent as necessary.
	3) Output shaft seals damaged or installed incorrectly.	3) Replace seal as necessary. Check to ensure that another component, the propeller shaft slip yoke for example, is not causing damage to seal.
Abnormal tire wear.	1) Extended operation on hard, dry surfaces in the 4H position.	1) Operate vehicle in the 2H position on hard, dry surfaces.

TRANSFER CASE - NV241 GENII (Continued)

REMOVAL

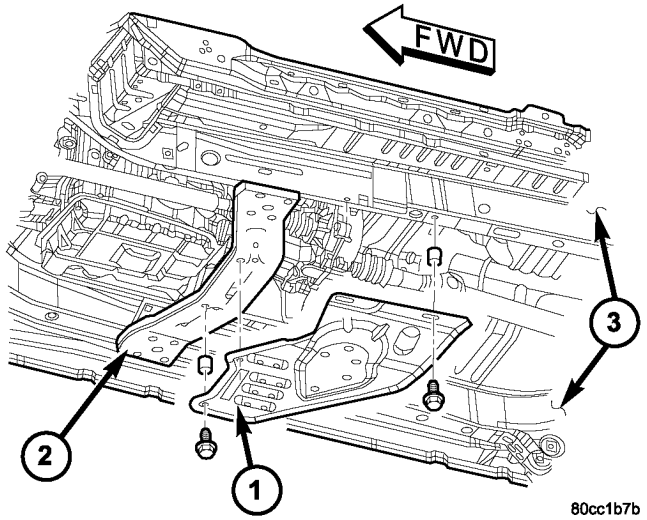

Fig. 2 Remove Skid Plate

1 - SKID PLATE
2 - TRANSMISSION CROSSMEMBER
3 - FRAME RAILS

(1) Shift transfer case into NEUTRAL.
(2) Raise vehicle.
(3) Remove skid plate (1) (Fig. 2).

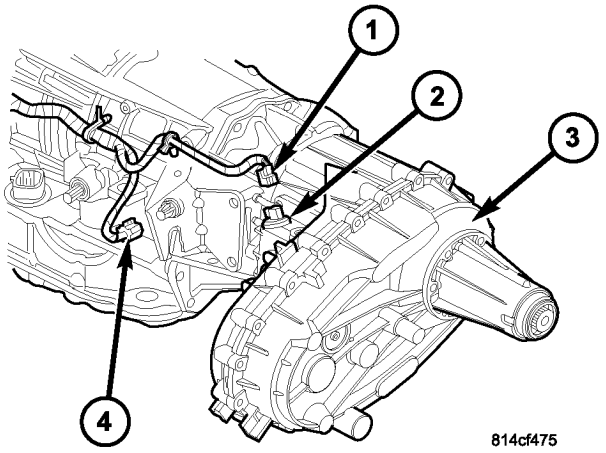

Fig. 3 Transfer Case Position Sensor and Connector

1 - TRANSFER CASE POSITION SENSOR CONNECTOR
2 - TRANSFER CASE POSITION SENSOR
3 - TRANSFER CASE
4 - OUTPUT SPEED SENSOR CONNECTOR

(4) Drain transfer case lubricant.
(5) Mark front and rear propeller shaft yokes for alignment reference.
(6) Remove the front/rear propeller shafts at transfer case. (Refer to 3 - DIFFERENTIAL & DRIVELINE/PROPELLER SHAFT/PROPELLER SHAFT - REMOVAL)
(7) Disconnect transfer case position sensor connector (1) (Fig. 3) from the position sensor (2).

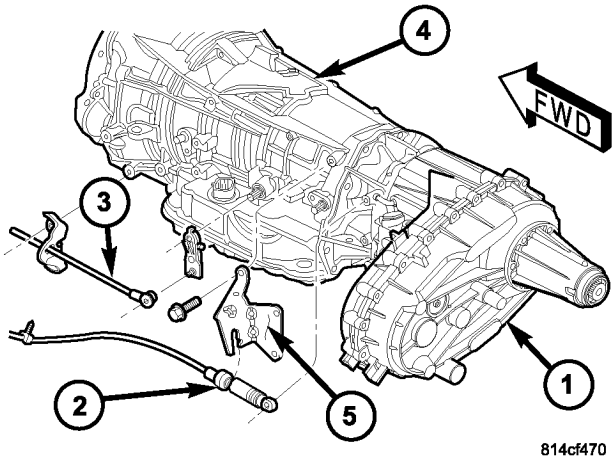

Fig. 4 Remove Shift Cables

1 - TRANSFER CASE
2 - TRANSFER CASE SHIFT CABLE
3 - TRANSMISSION SHIFT CABLE
4 - AUTOMATIC TRANSMISSION
5 - TRANSFER CASE SHIFT CABLE BRACKET

(8) Disconnect transfer case shift cable (2) (Fig. 4) at the range lever.
(9) Disconnect the transfer case shift cable (2) from the shift cable bracket (5).

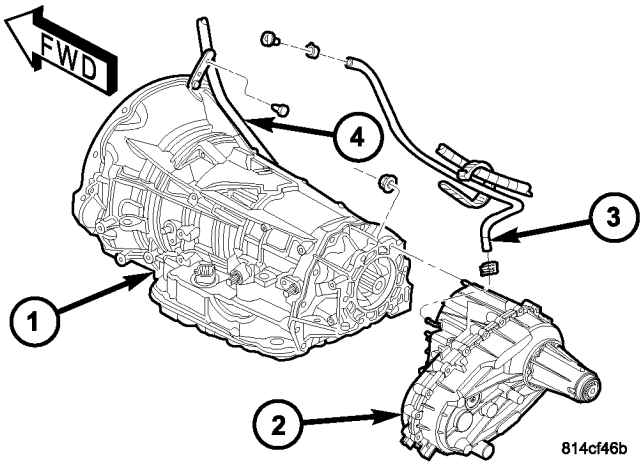

Fig. 5 Remove Vent Hose and Transfer Case

1 - AUTOMATIC TRANSMISSION
2 - TRANSFER CASE
3 - VENT HOSE
4 - FILL TUBE

(10) Disconnect transfer case vent hose (3) (Fig. 5).
(11) Support transfer case (2) with transmission jack.
(12) Secure transfer case to jack with chains.
(13) Remove nuts attaching transfer case to transmission (1).

TRANSFER CASE - NV241 GENII (Continued)

(14) Pull transfer case and jack rearward to disengage transfer case.

(15) Remove transfer case from under vehicle.

DISASSEMBLY

Position transfer case in a shallow drain pan. Remove drain plug and drain any remaining lubricant remaining in case.

COMPANION FLANGE AND RANGE LEVER

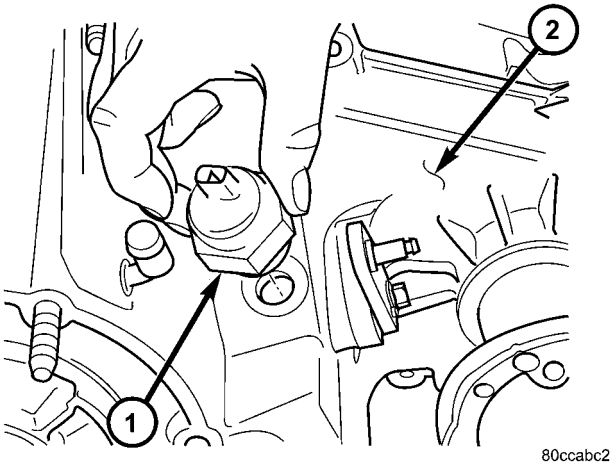

Fig. 6 Remove Transfer Case Position Sensor

1 - TRANSFER CASE POSITION SENSOR
2 - TRANSFER CASE

(1) Remove transfer case position sensor (1) (Fig. 6).

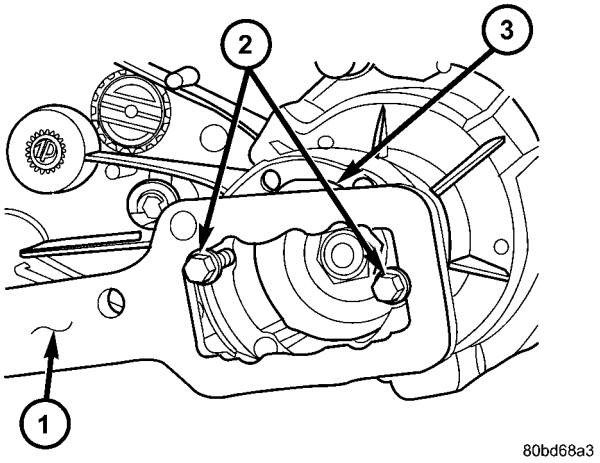

Fig. 7 Hold Companion Flange - Typical

1 - HOLDER C-3281
2 - BOLTS
3 - COMPANION FLANGE

(2) Install two bolts (2) (Fig. 7) partially into the propellor shaft companion flange (3), 180° from each other.

(3) Install the rectangular end of the Flange Holder C-3281 (1) over the bolts to hold the companion flange stationary and remove the nut holding the companion flange to the output shaft.

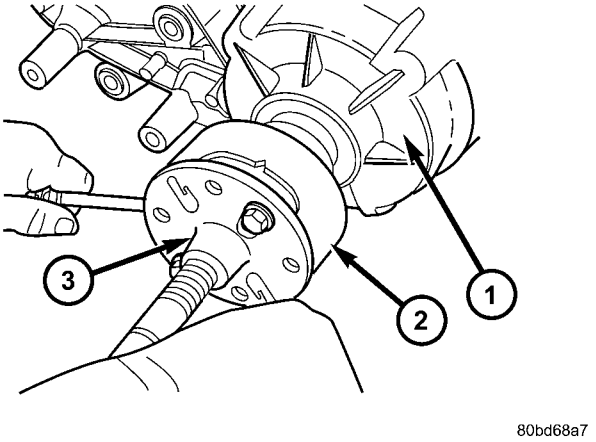

Fig. 8 Remove Companion Flange - Typical

1 - TRANSFER CASE
2 - COMPANION FLANGE
3 - REMOVER C-452

(4) Use Remover C-452 (3) (Fig. 8) to remove the companion flange (2).

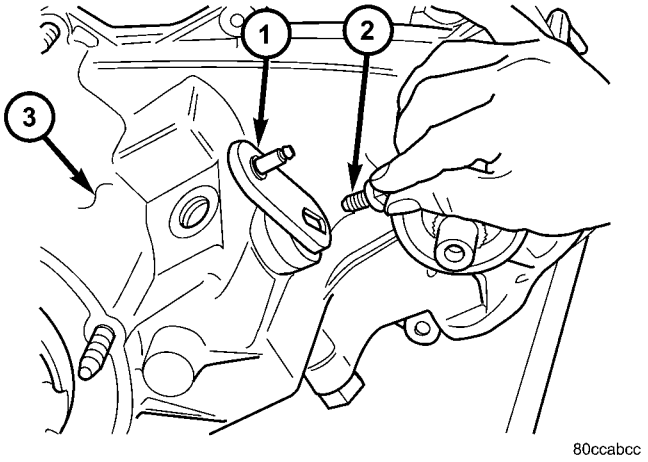

Fig. 9 Remove Shift Lever Bolt - Typical

1 - RANGE LEVER
2 - RANGE LEVER BOLT
3 - TRANSFER CASE

(5) Remove seal washer from front output shaft. Discard washer as it should not be reused.

(6) Remove the bolt (2) (Fig. 9) that attaches the range lever (1) to sector shaft. Then move sector to neutral position and remove range lever from shaft.

NOTE: Be sure to note the orientation of the range lever (lever up or down) so that it may be re-installed in the same direction.

TRANSFER CASE - NV241 GENII (Continued)

REAR EXTENSION

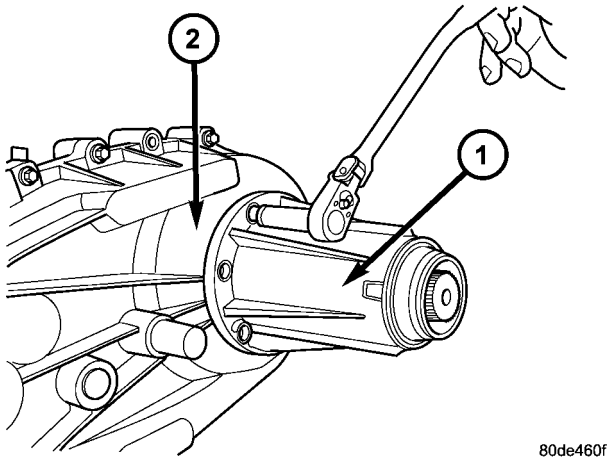

Fig. 10 Remove Rear Extension Bolts

1 - EXTENSION HOUSING
2 - TRANSFER CASE

(1) Remove rear extension (1) (Fig. 10) bolts.

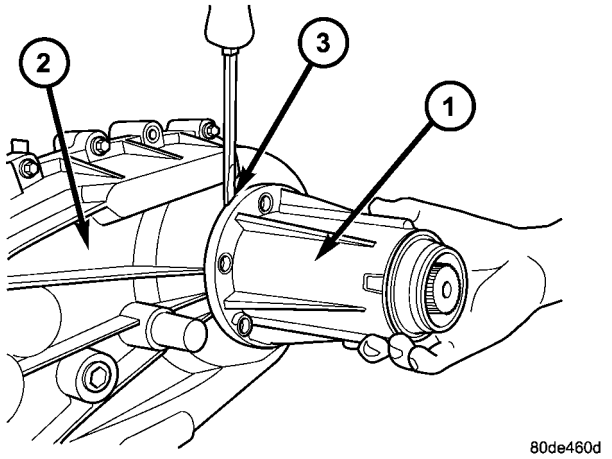

Fig. 11 Remove Rear Extension

1 - EXTENSION HOUSING
2 - TRANSFER CASE
3 - PRY SLOT

(2) Remove rear extension housing (1) (Fig. 11). Tap extension once or twice with a plastic mallet to break sealer bead and loosen it.

(3) Remove output bearing (2) (Fig. 12) retaining ring (3) with heavy duty snap-ring pliers.

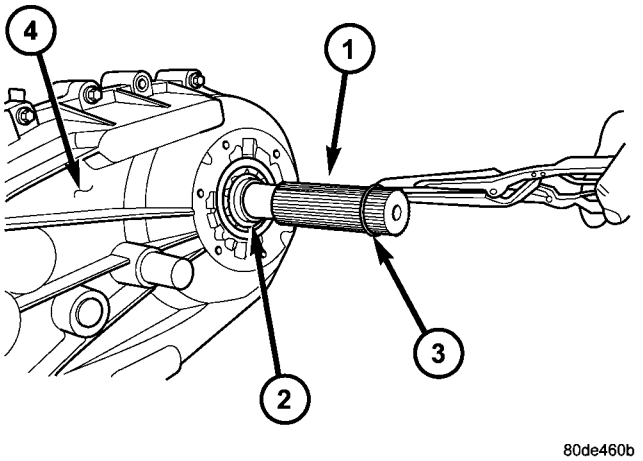

Fig. 12 Remove Output Shaft Retaining Ring

1 - REAR OUTPUT SHAFT
2 - OUTPUT SHAFT BEARING
3 - RETAINING RING
4 - TRANSFER CASE

OIL PUMP AND REAR CASE

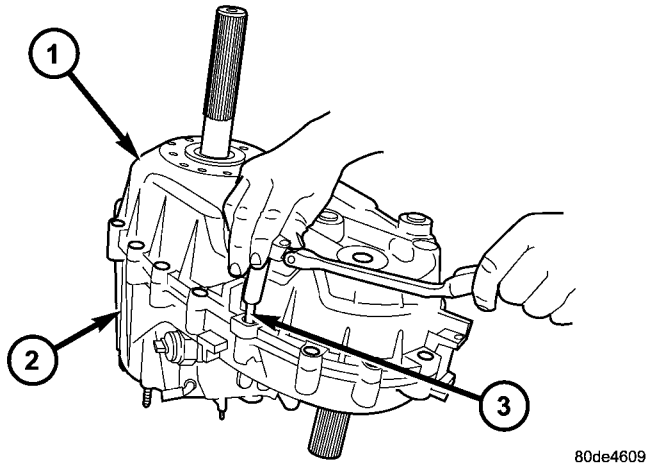

Fig. 13 Remove Case Bolts

1 - REAR CASE
2 - FRONT CASE
3 - BOLT

(1) Remove rear case(1)-to-front case (2) bolts (3) (Fig. 13).

TRANSFER CASE - NV241 GENII (Continued)

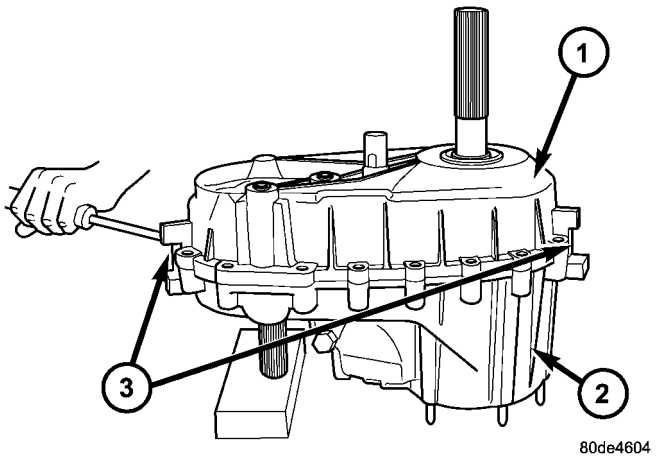

Fig. 14 Loosen Case Halves

1 - REAR CASE
2 - FRONT CASE
3 - PRY SLOTS

(2) Loosen rear case (1) (Fig. 14) with pry tool to break sealer bead. Insert tool in slot (3) at each end of case.

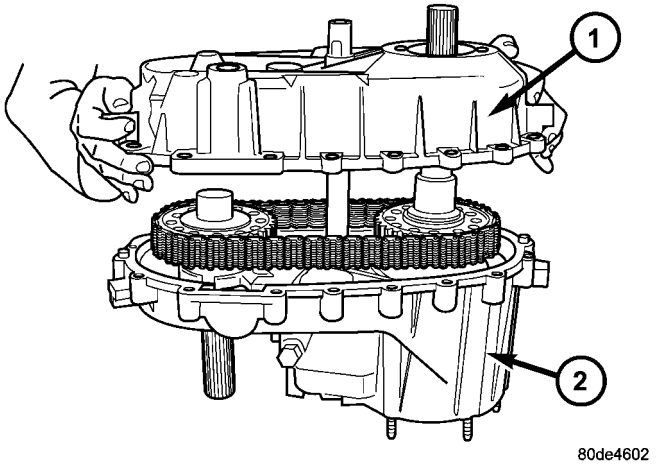

Fig. 15 Remove Rear Case

1 - REAR CASE
2 - FRONT CASE

(3) Unseat rear case (1) (Fig. 15) from alignment dowels.

(4) Remove rear case and oil pump assembly from front case.

CAUTION: Do not remove the bolts holding the oil pump cover to the rear case half. The oil pump cover is aligned to the rear output shaft bearing inner race and will become mis-aligned if the bolts are loosened. If the transfer case failure has generated any debris which may have become trapped in the oil pump, the rear case and oil pump assembly MUST be replaced.

FRONT OUTPUT SHAFT AND DRIVE CHAIN

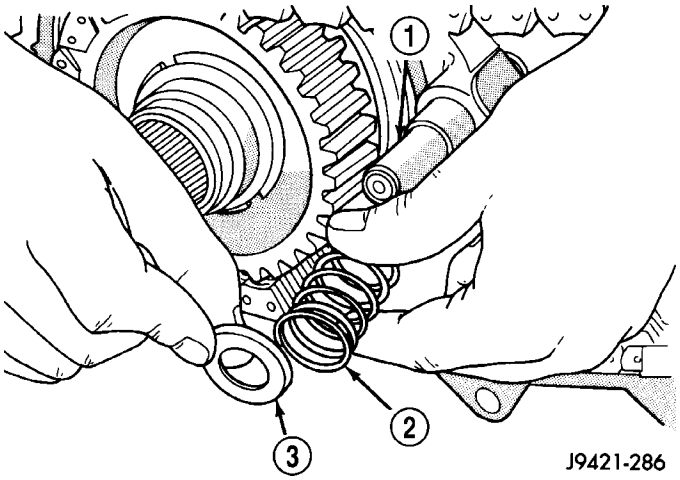

Fig. 16 Shift Rail Cup And Spring Removal

1 - SHIFT RAIL
2 - SPRING
3 - CUP

(1) Remove shift rail (1) cup (3) and spring (2) (Fig. 16).

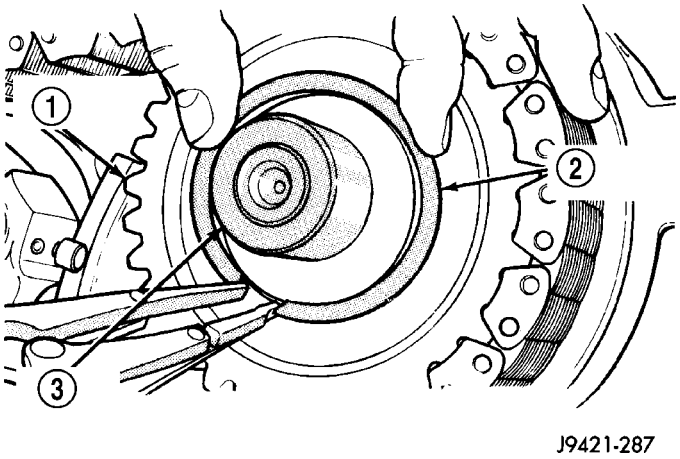

Fig. 17 Removing Front Sprocket Retaining Ring

1 - FRONT SPROCKET
2 - RETAINING RING
3 - FRONT OUTPUT SHAFT

(2) Remove front sprocket (1) retaining ring (2) (Fig. 17).

TRANSFER CASE - NV241 GENII (Continued)

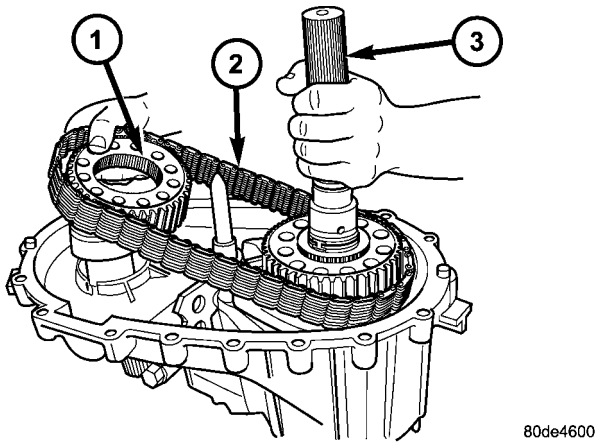

Fig. 18 Remove Front Sprocket and Drive Chain

1 - FRONT DRIVE SPROCKET
2 - DRIVE CHAIN
3 - MAINSHAFT

(3) Pull mainshaft (3) (Fig. 18), front sprocket (1) and chain outward about 25.4 mm (1-inch) simultaneously.

(4) Remove chain from mainshaft drive sprocket and remove front sprocket and chain as assembly.

SHIFT FORKS AND MAINSHAFT

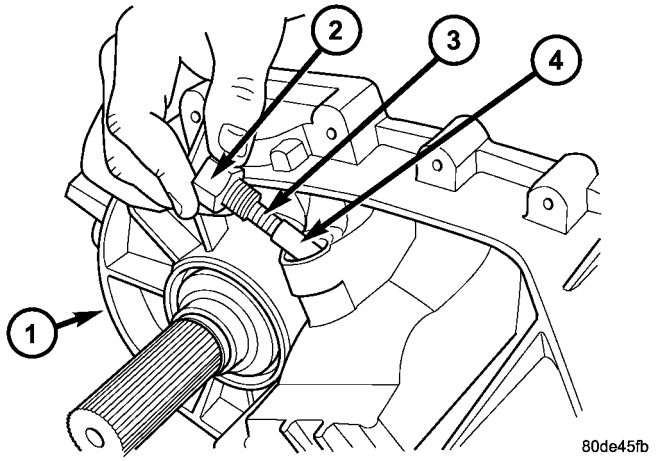

Fig. 19 Remove Detent Plug, Spring, and Plunger

1 - FRONT CASE
2 - DETENT PLUG
3 - DETENT SPRING
4 - DETENT PLUNGER

(1) Loosen detent plug (2) (Fig. 19).

(2) Remove detent plug (2), spring (3), and plunger (4). Note that the plug has an O-ring seal. Remove and discard this seal.

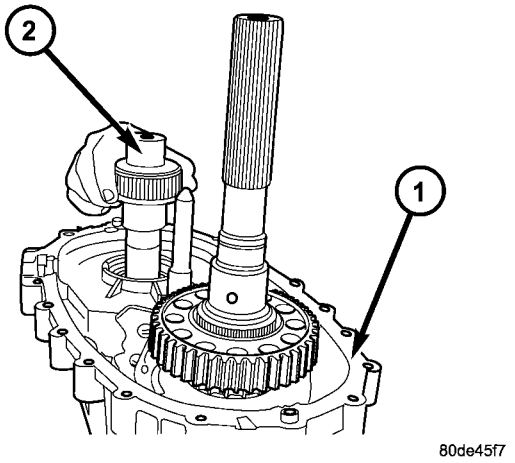

Fig. 20 Remove Front Output Shaft

1 - FRONT CASE
2 - FRONT OUTPUT SHAFT

(3) Remove front output shaft (2) from bearing in the front case (1) (Fig. 20).

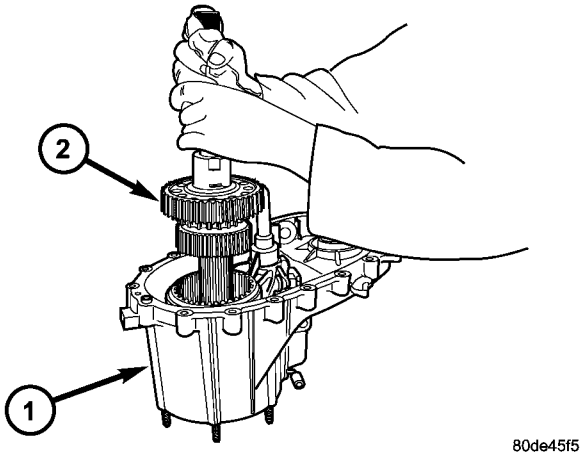

Fig. 21 Remove Mainshaft

1 - FRONT CASE
2 - MAINSHAFT

(4) Pull mainshaft assembly (2) out of input gear, mode sleeve, and front case (1) (Fig. 21).

TRANSFER CASE - NV241 GENII (Continued)

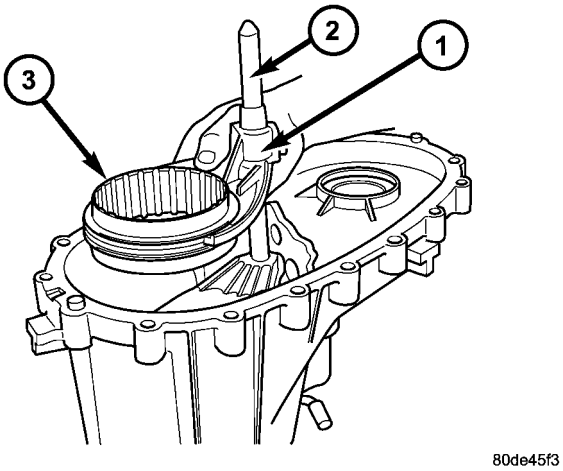

Fig. 22 Remove Mode Fork and Shift Rail

1 - MODE FORK
2 - SHIFT RAIL
3 - MODE SLEEVE

(5) Remove mode fork (1), mode sleeve (3), and shift rail (2) (Fig. 22) as assembly. Note which way the sleeve fits in the fork (long side of sleeve goes to front).

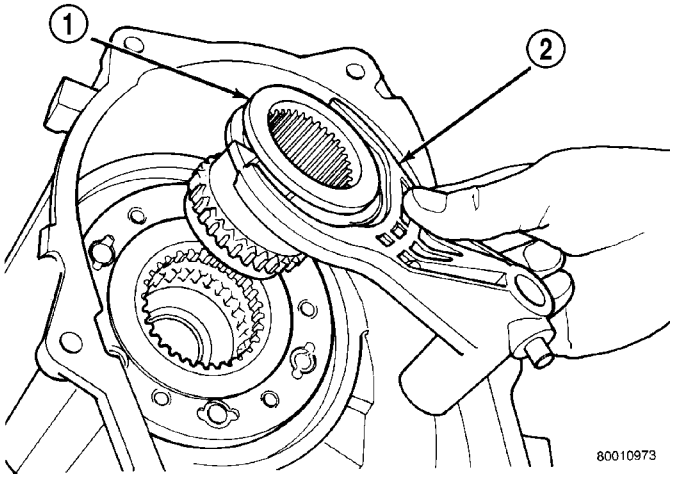

Fig. 23 Range Fork And Hub Removal

1 - RANGE HUB
2 - RANGE FORK

(6) Remove range fork retaining ring.

(7) Remove range fork (2) (Fig. 23) and hub (1) as an assembly. Note fork position for installation reference.

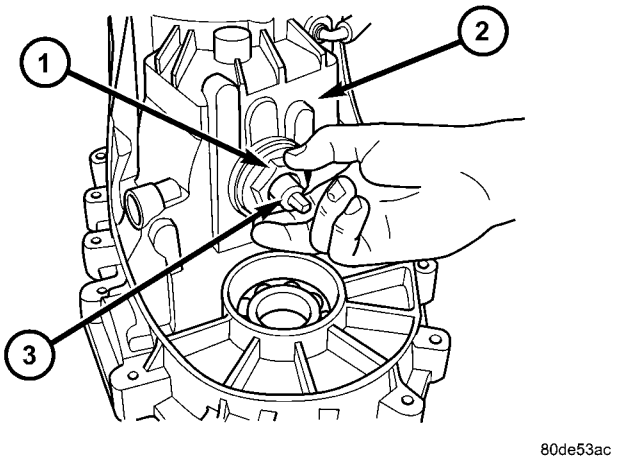

Fig. 24 Remove Sector Support

1 - SECTOR SUPPORT
2 - FRONT CASE
3 - SECTOR SHAFT

(8) Remove the shift sector support (1) (Fig. 24).

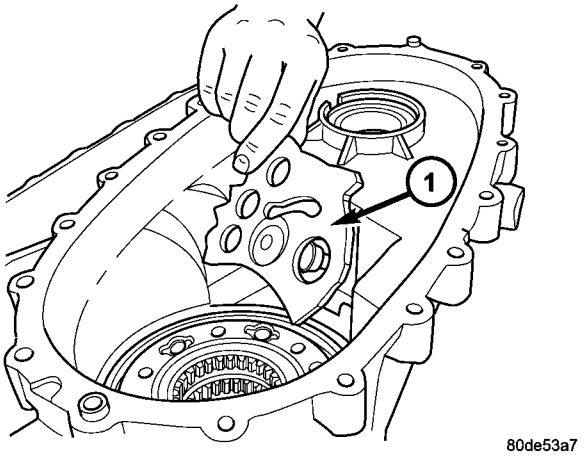

Fig. 25 Remove Shift Sector

1 - SHIFT SECTOR

(9) Remove shift sector (1) (Fig. 25).

TRANSFER CASE - NV241 GENII (Continued)

MAINSHAFT

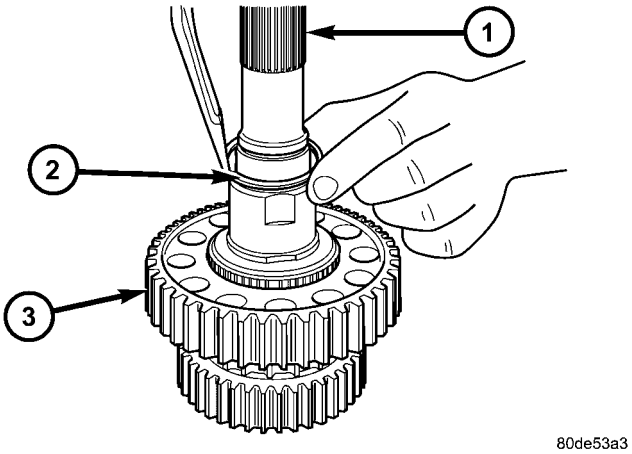

Fig. 26 Remove The Drive Sprocket Retaining Ring

1 - OUTPUT SHAFT
2 - RETAINING RING
3 - DRIVE SPROCKET

(1) Remove the drive sprocket retaining ring (2) (Fig. 26) from the output shaft (1).

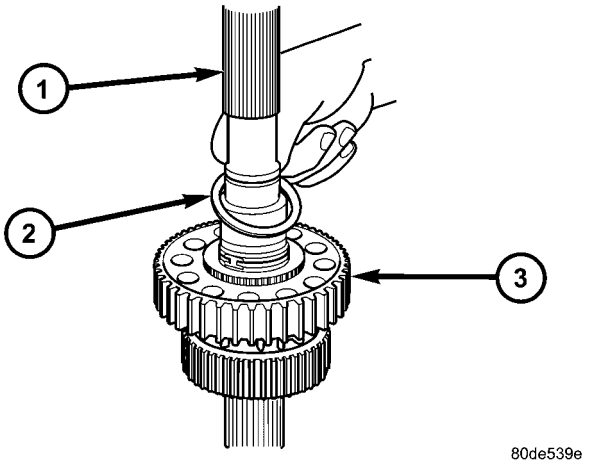

Fig. 27 Remove Drive Sprocket Thrust Washer

1 - OUTPUT SHAFT
2 - THRUST WASHER
3 - DRIVE SPROCKET

(2) Remove the drive sprocket (3) thrust washer (2) (Fig. 27) from the output shaft (1).

(3) Remove drive sprocket (2) (Fig. 28) from the output shaft (1).

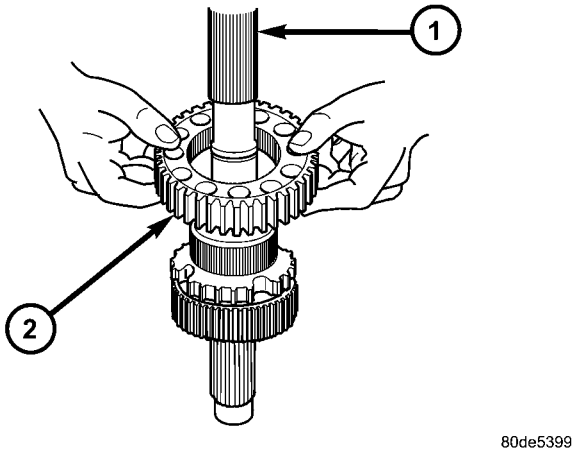

Fig. 28 Remove Drive Sprocket

1 - OUTPUT SHAFT
2 - DRIVE SPROCKET

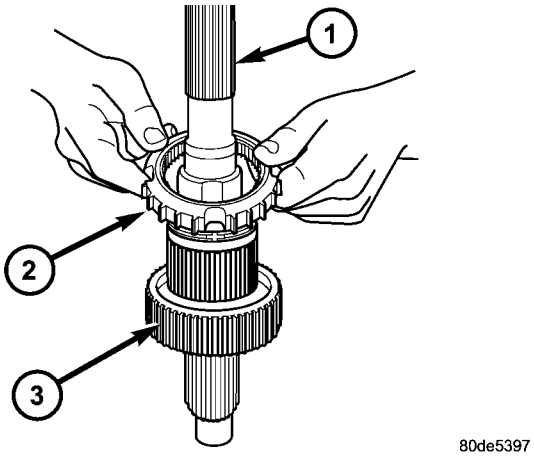

Fig. 29 Remove Clutch Gear

1 - OUTPUT SHAFT
2 - CLUTCH GEAR
3 - MODE HUB

(4) Remove the clutch gear (2) (Fig. 29) from the output shaft (1).

Remove the sprocket hub (2) (Fig. 30) from the output shaft (1).

TRANSFER CASE - NV241 GENII (Continued)

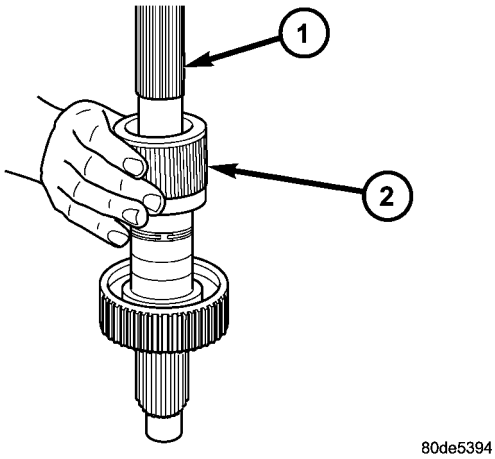

Fig. 30 Remove Sprocket Hub

1 - OUTPUT SHAFT
2 - SPROCKET HUB

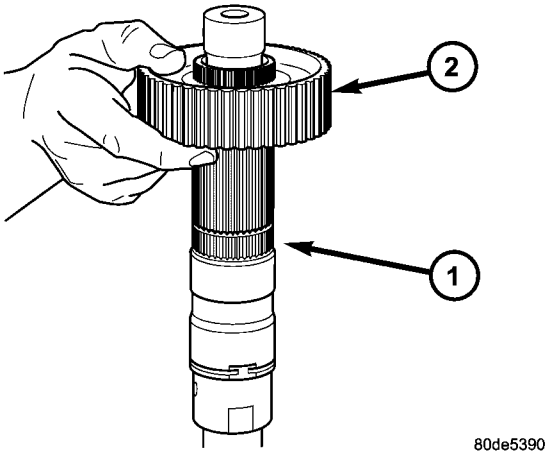

Fig. 32 Remove Mode Hub

1 - OUTPUT SHAFT
2 - MODE HUB

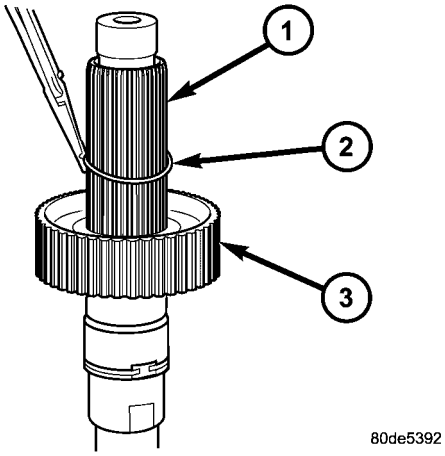

Fig. 31 Remove Retaining Ring

1 - OUTPUT SHAFT
2 - RETAINING RING
3 - MODE HUB

(5) Remove the mode hub (3) retaining ring (2) (Fig. 31) from the output shaft (1).

(6) Remove the mode hub (2) (Fig. 32) from the output shaft (1).

INPUT AND PLANETARY GEAR

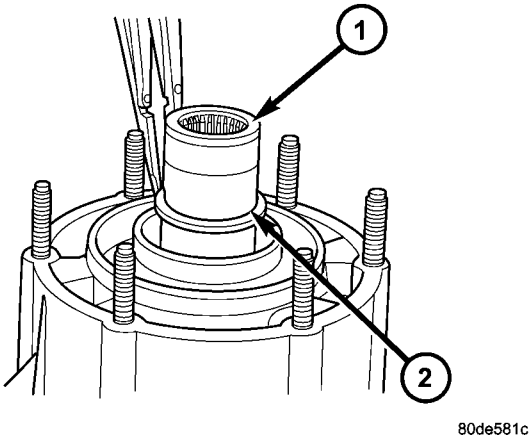

Fig. 33 Remove Input Gear Retaining Ring

1 - INPUT GEAR
2 - RETAINING RING

(1) Remove input gear seal with suitable screw and slide hammer.

(2) Remove input gear (1) retaining ring (2) (Fig. 33) with heavy duty snap-ring pliers.

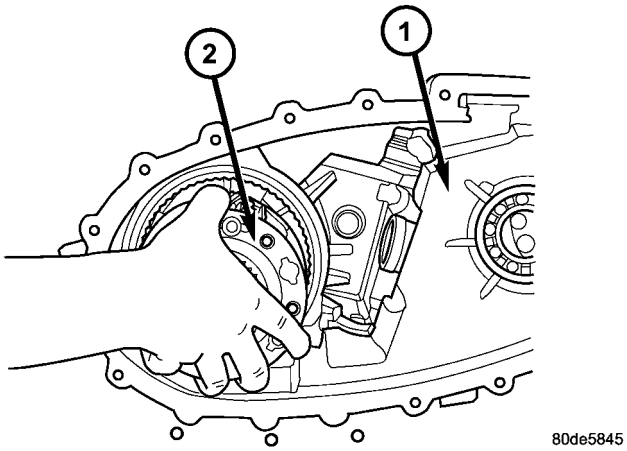

Fig. 34 Remove Input Planetary Assembly

1 - FRONT CASE
2 - INPUT PLANETARY ASSEMBLY

(3) Place front case in horizontal position. Then remove input gear and low range gear as an assembly (2) (Fig. 34). Tap gear out of bearing with plastic mallet, if necessary.

INPUT AND PLANETARY GEAR

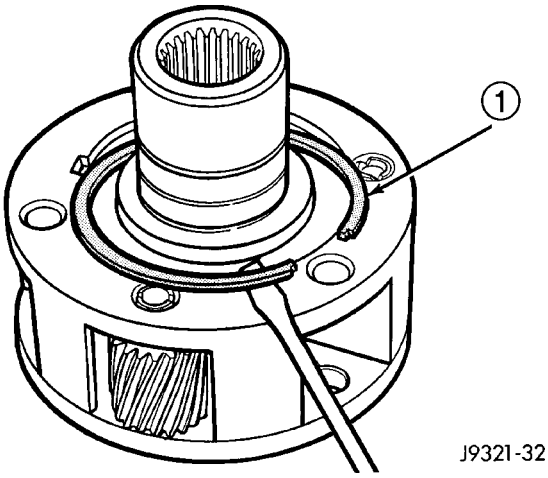

Fig. 35 Input Gear Snap-Ring Removal

1 - INPUT GEAR SNAP-RING

(1) Remove snap-ring (1) (Fig. 35) that retains input gear in low range gear.

(2) Remove retainer (3) (Fig. 36).

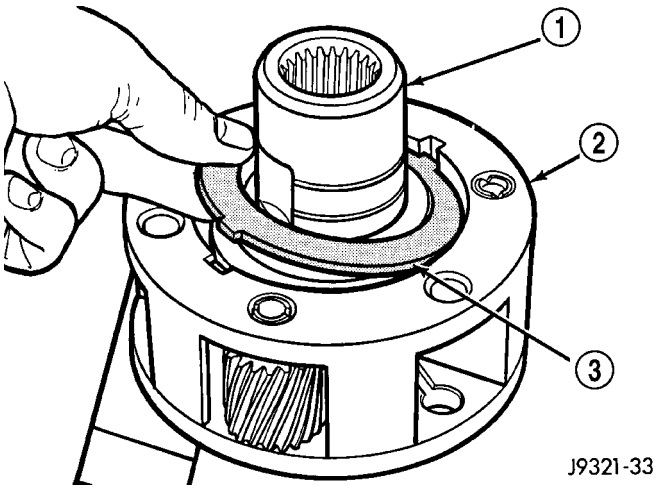

Fig. 36 Input Gear Retainer Removal

1 - INPUT GEAR
2 - LOW RANGE GEAR
3 - RETAINER

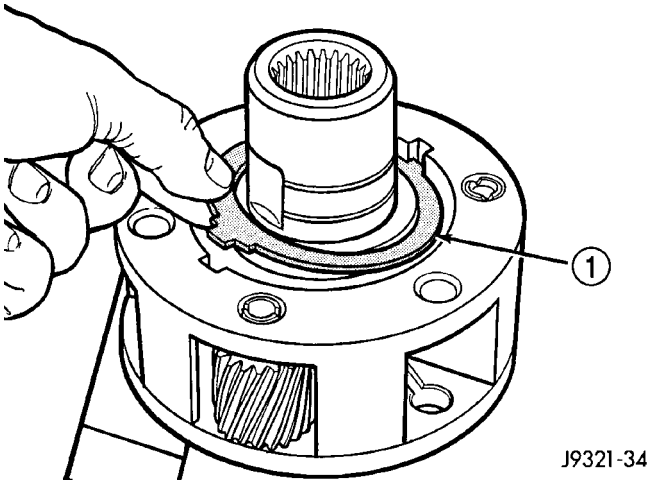

Fig. 37 Front Tabbed Thrust Washer Removal

1 - FRONT TABBED THRUST WASHER

(3) Remove front tabbed thrust washer (1) (Fig. 37).

TRANSFER CASE - NV241 GENII (Continued)

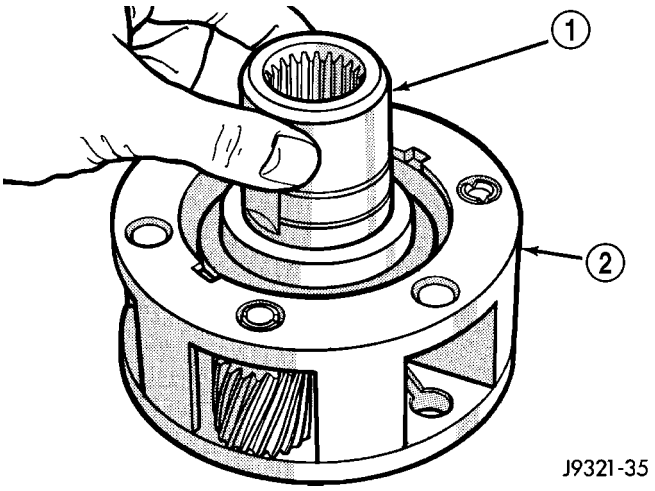

Fig. 38 Input Gear Removal

1 - INPUT GEAR
2 - LOW RANGE GEAR

(4) Remove input gear (1) (Fig. 38).

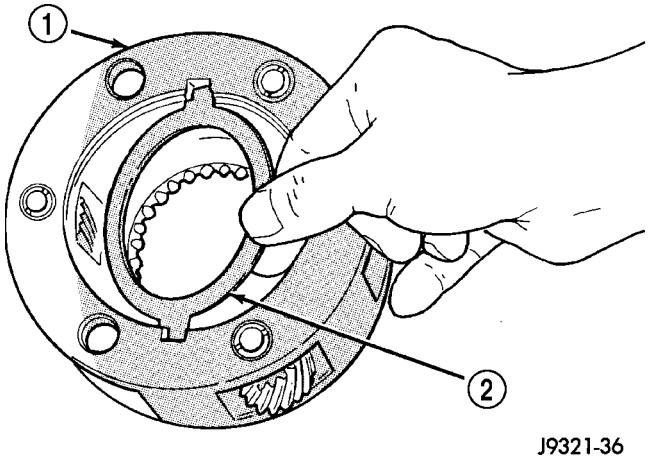

Fig. 39 Rear Tabbed Thrust Washer Removal

1 - LOW RANGE GEAR
2 - REAR TABBED THRUST WASHER

(5) Remove rear tabbed thrust washer (2) from low range gear (1) (Fig. 39).

CLEANING

Clean the transfer case parts with a standard parts cleaning solvent. Remove all traces of sealer from the cases and retainers with a scraper and 3M™ all purpose cleaner. Use compressed air to remove solvent residue from oil feed passages in the case halves, retainers, gears, and shafts.

INSPECTION

MAINSHAFT/SPROCKET/HUB

Inspect the splines on the hub and shaft and the teeth on the sprocket. Minor nicks and scratches can be smoothed with an oilstone, however, replace any part that is damaged.

Check the contact surfaces in the sprocket bore and on the mainshaft. Minor nicks and scratches can be smoothed with 320-400 grit emery cloth but do not try to salvage the shaft if nicks or wear is severe.

INPUT GEAR AND PLANETARY CARRIER

Check the teeth on the gear (6) (Fig. 40). Minor nicks can be dressed off with an oilstone but replace the gear if any teeth are broken, cracked, or chipped. The bearing surface on the gear can be smoothed with 300-400 grit emery cloth if necessary.

Examine the carrier body (1) and pinion gears for wear or damage. The carrier will have to be replaced as an assembly if the body, pinion pins, or pinion gears are damaged.

Check the lock ring (4) and both thrust washers (2, 3) for wear or cracks. Replace them if necessary. Also replace the lock retaining ring (5) if bent, distorted, or broken.

SHIFT FORKS/HUBS/SLEEVES

Check condition of the shift forks and mode fork shift rail (2) (Fig. 41). Minor nicks on the shift rail can be smoothed with 320-400 grit emery cloth.

Inspect the shift fork wear pads (3, 4) (Fig. 42). The mode fork pads are serviceable and can be replaced if necessary. The range fork pads are not serviceable. The fork must be replaced as an assembly if the pads are worn or damaged.

Check both of the sleeves for wear or damage, especially on the interior teeth. Replace the sleeves if wear or damage is evident.

REAR RETAINER COMPONENTS

Inspect the retainer components. Replace the bearing if rough or noisy. Check the retainer for cracks or wear in the bearing bore.

Inspect the retaining rings and washers. Replace any part if distorted, bent, or broken. Reuse is not recommended.

Inspect rear extension bushing. Replace if worn or scored.

DRIVE CHAIN

Examine the drive chain and shaft bearings. replace the chain if stretched, distorted, or if any of the links bind. Replace the bearings if rough, or noisy.

TRANSFER CASE - NV241 GENII (Continued)

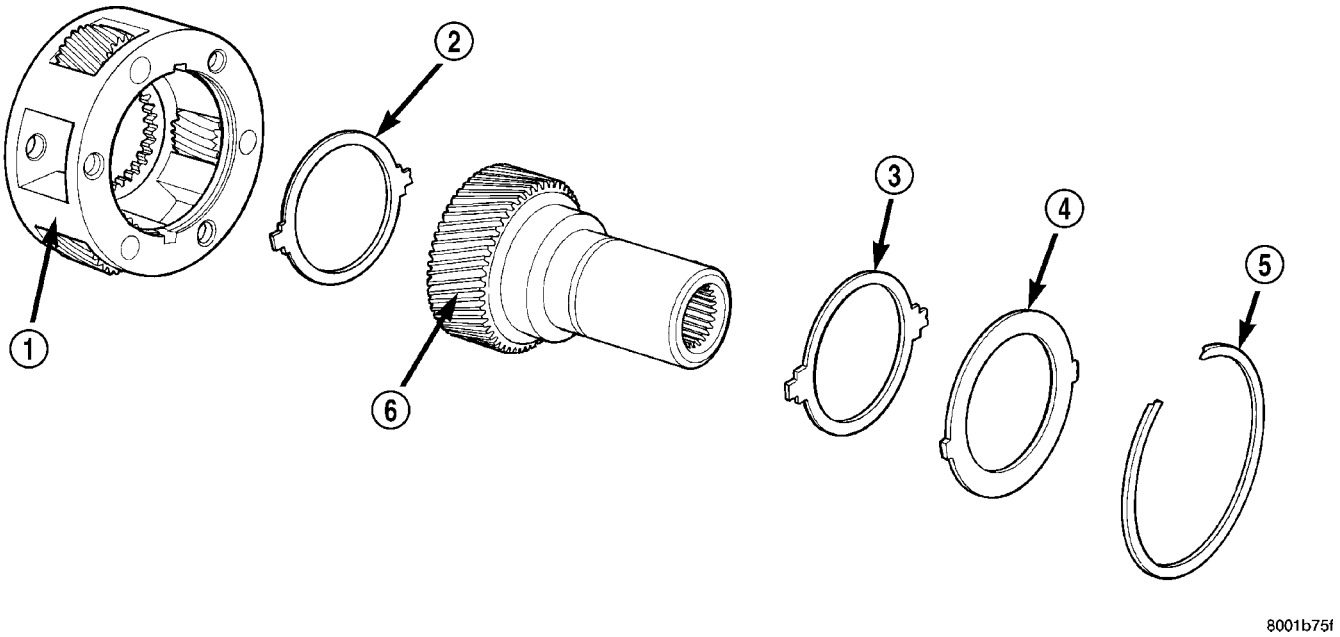

Fig. 40 Input Gear And Carrier Components

1 - PLANETARY CARRIER
2 - REAR THRUST WASHER
3 - FRONT THRUST WASHER
4 - CARRIER LOCK RING
5 - CARRIER LOCK RETAINING RING
6 - INPUT GEAR

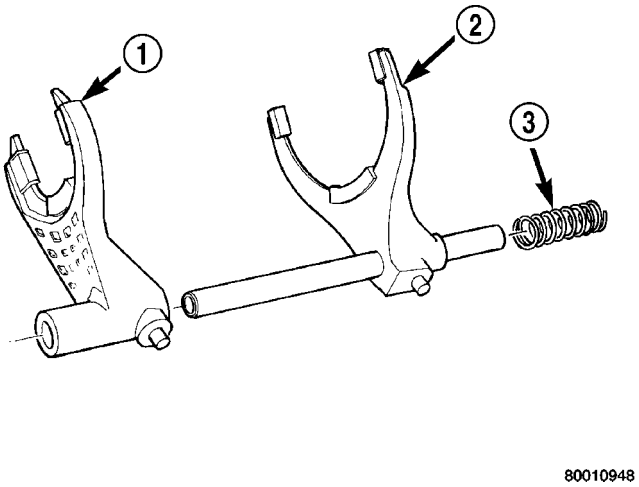

Fig. 41 Shift Forks

1 - RANGE FORK
2 - MODE FORK AND RAIL
3 - MODE SPRING

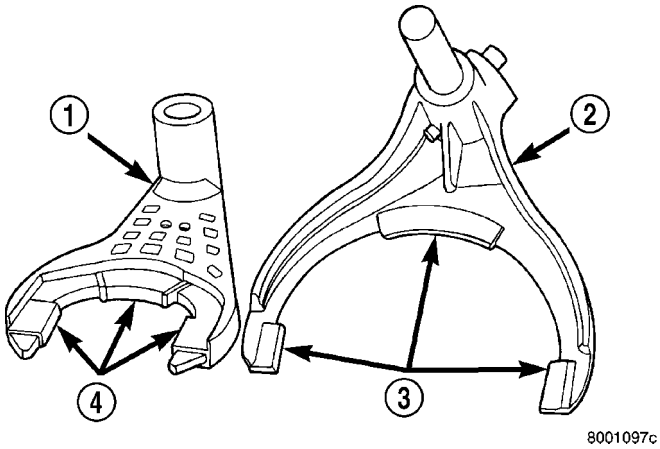

Fig. 42 Shift Fork And Wear Pad Locations

1 - RANGE FORK
2 - MODE FORK
3 - WEAR PADS (SERVICEABLE)
4 - WEAR PADS (SERVICEABLE)

TRANSFER CASE - NV241 GENII (Continued)

LOW RANGE ANNULUS GEAR

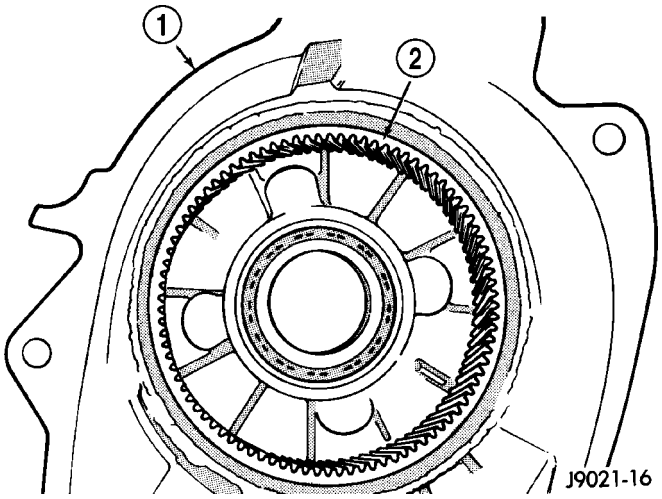

Fig. 43 Low Range Annulus Gear

1 - FRONT CASE
2 - LOW RANGE ANNULUS GEAR

Inspect annulus gear (2) (Fig. 43) condition carefully. The gear is only serviced as part of the front case. If the gear is damaged, it will be necessary to replace the gear and front case as an assembly. Do not attempt to remove the gear.

FRONT CASE AND REAR CASE

Inspect the cases for wear and damage.

Check case condition. If leaks were a problem, look for gouges and severe scoring of case sealing surfaces. Also make sure the front case mounting studs are in good condition.

Check the front case mounting studs and vent tube. The tube can be secured with Loctite™ 271 or 680 if loose. The stud threads can be cleaned up with a die if necessary. Also check condition of the fill/drain plug threads in the rear case. The threads can be repaired with a thread chaser or tap if necessary. Or the threads can be repaired with Helicoil™ stainless steel inserts if required.

OIL PUMP/OIL PICKUP

Examine the oil pump pickup parts. Replace the pump if any part appears to be worn or damaged. Do not disassemble the pump as individual parts are not available. The pump is only available as a complete assembly. The pickup screen, hose, and tube are the only serviceable parts and are available separately.

ASSEMBLY

BEARINGS AND SEALS

(1) Remove the input shaft bearing (1) (Fig. 44) from the front case (2) with suitable snap-ring pliers.

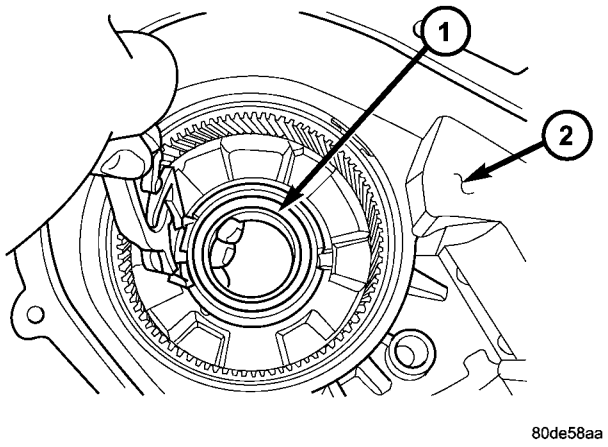

Fig. 44 Remove Input Gear Bearing

1 - INPUT GEAR BEARING
2 - FRONT CASE

(2) Transfer the retaining ring to the new bearing if necessary and install the bearing into the front case.

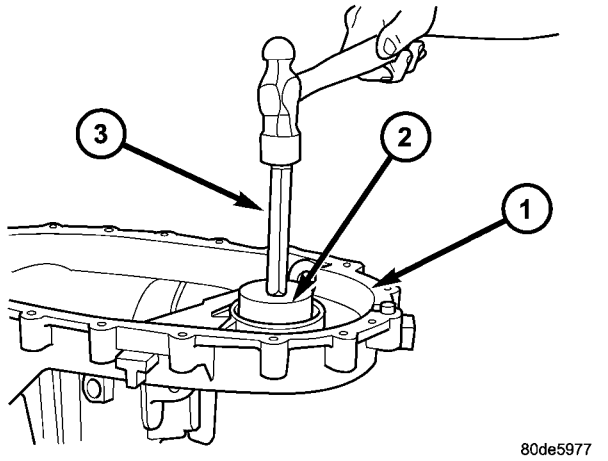

Fig. 45 Remove Front Output Shaft Bearing

1 - FRONT CASE
2 - INSTALLER 6436
3 - HANDLE C-4171

(3) Using Installer 6436 (2) and Handle C-4171 (3) (Fig. 45), remove front output shaft bearing.

(4) Start front output shaft bearing in case. Then seat bearing with Handle C-4171 and Installer 6953.

(5) Install front output shaft bearing retaining ring.

(6) Remove input gear pilot bearing by inserting a suitably sized drift (1) (Fig. 46) into the splined end of the input gear (2) and driving the bearing out with the drift and a hammer.

(7) Install new pilot bearing with Remover/Installer 8684.

TRANSFER CASE - NV241 GENII (Continued)

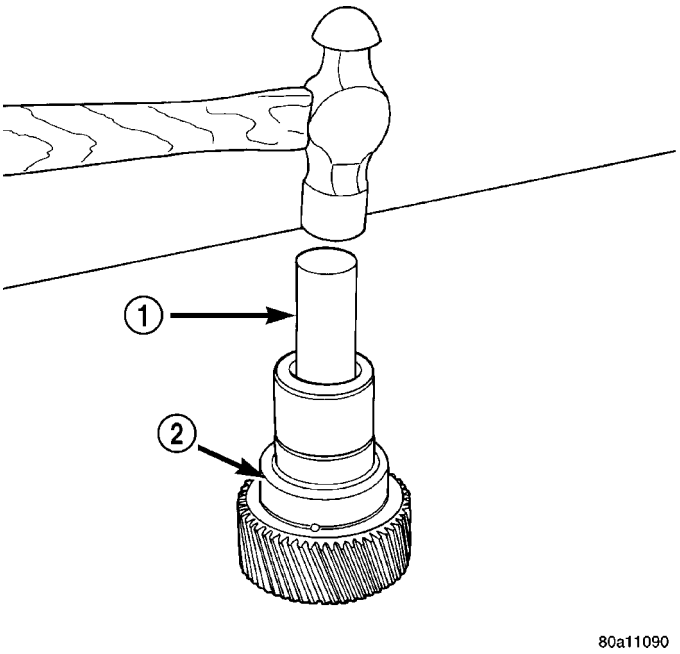

Fig. 46 Remove Input Gear Cup Plug

1 - DRIFT
2 - INPUT GEAR

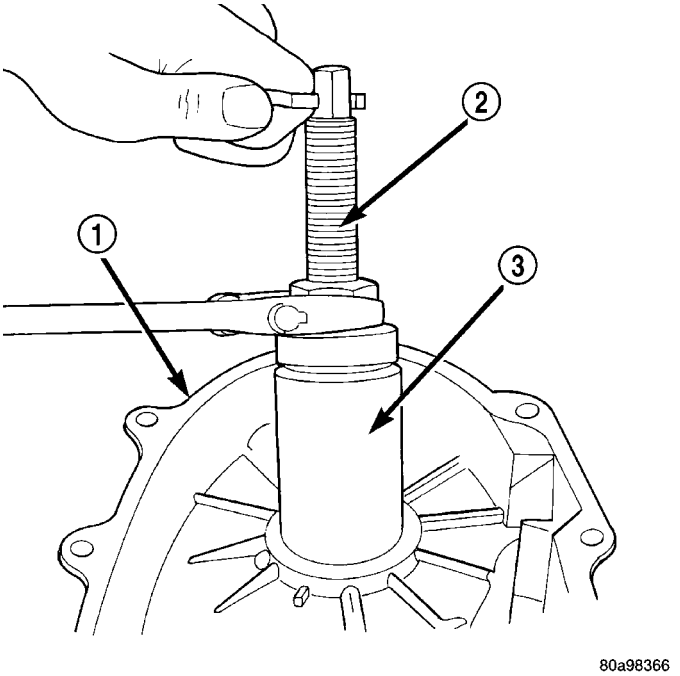

Fig. 47 Front Output Shaft Rear Bearing Removal

1 - REAR CASE
2 - SPECIAL TOOL L-4454-1 AND L-4454-3
3 - SPECIAL TOOL 8148

(8) Remove the front output shaft rear bearing with the screw and jaws from Remover L-4454 (2) and Cup 8148 (3) (Fig. 47).

(9) Install new bearing with Tool Handle C-4171 (1) and Installer 5066 (3) (Fig. 48).

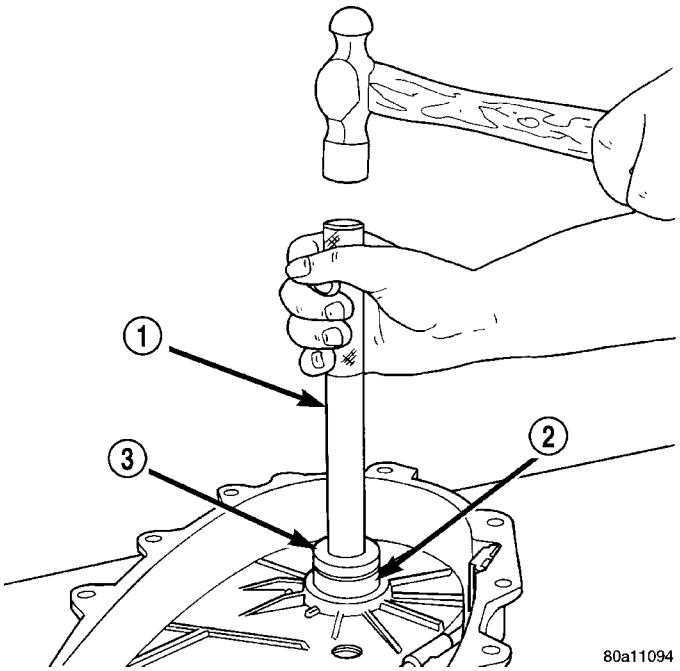

Fig. 48 Output Shaft Rear Bearing Installation

1 - HANDLE C-4171
2 - OUTPUT SHAFT INNER BEARING
3 - INSTALLER 5066

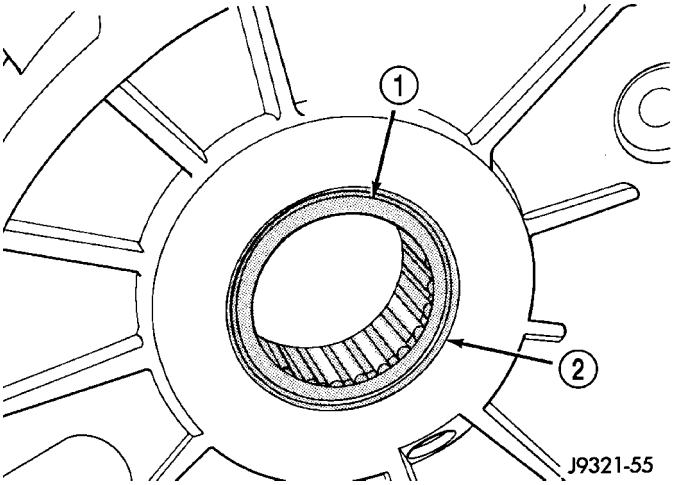

Fig. 49 Output Shaft Rear Bearing Installation Depth

1 - BEARING (SEATED) AT LOWER EDGE OF CHAMFER
2 - CHAMFER

(10) The bearing bore is chamfered (1) (Fig. 49) at the top. Install the bearing so it is flush with the lower edge of this chamfer.

TRANSFER CASE - NV241 GENII (Continued)

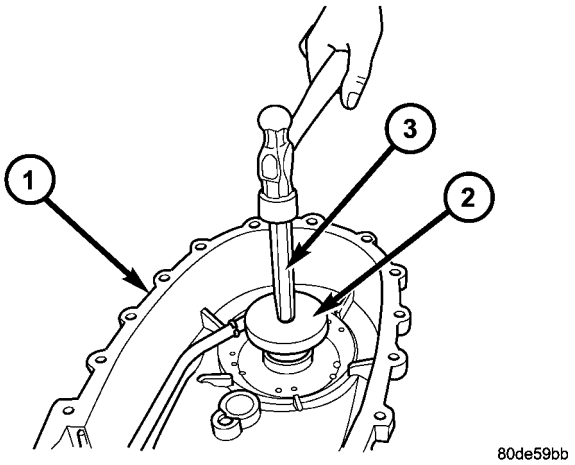

Fig. 50 Remove Rear Output Shaft Bearing

1 - REAR CASE
2 - REMOVER/INSTALLER 8684
3 - HANDLE C-4171

(11) Remove the rear output shaft bearing from the rear case using Remover/Installer 8684 (2) and Handle C-4171 (3) (Fig. 50).

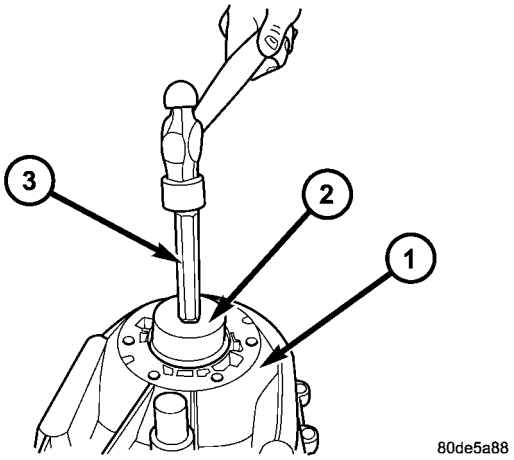

Fig. 51 Install Rear Output Shaft Bearing

1 - REAR CASE
2 - REMOVER/INSTALLER 6953
3 - HANDLE C-4171

(12) Install the rear output shaft bearing into the rear case (1) using Remover/Installer 6953 (2) (Fig. 51) and Handle C-4171 (3).

INPUT AND PLANETARY GEAR

(1) Lubricate gears (3, 4) and thrust washers (5) (Fig. 52) with recommended transmission fluid.

(2) Install first thrust washer (5) in low range gear (3). Be sure washer tabs are properly aligned in gear notches.

(3) Install input gear (3) in low range gear (4). Be sure input gear is fully seated.

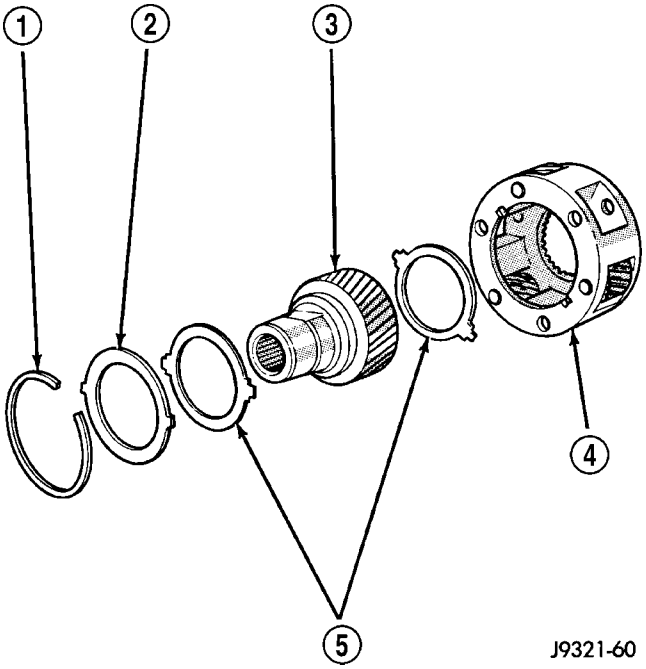

Fig. 52 Input/Low Range Gear Components

1 - SNAP-RING
2 - RETAINER PLATE
3 - INPUT GEAR
4 - LOW RANGE GEAR
5 - THRUST WASHERS

(4) Install remaining thrust washer (5) in low range gear (4) and on top of input gear (3). Be sure washer tabs are properly aligned in gear notches.

(5) Install retainer (2) on input gear and install snap-ring (1).

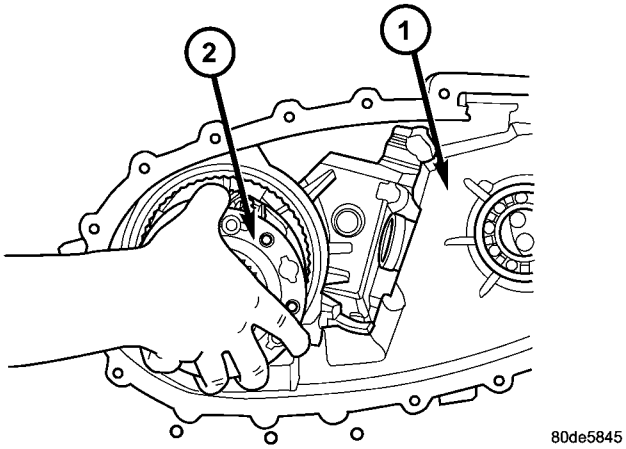

Fig. 53 Install Input Planetary Assembly

1 - FRONT CASE
2 - INPUT PLANETARY ASSEMBLY

TRANSFER CASE - NV241 GENII (Continued)

(6) Align and install low range/input gear assembly (2) in front case (1) (Fig. 53). Be sure low range gear pinions are engaged in annulus gear and that input gear shaft is fully seated in front bearing.

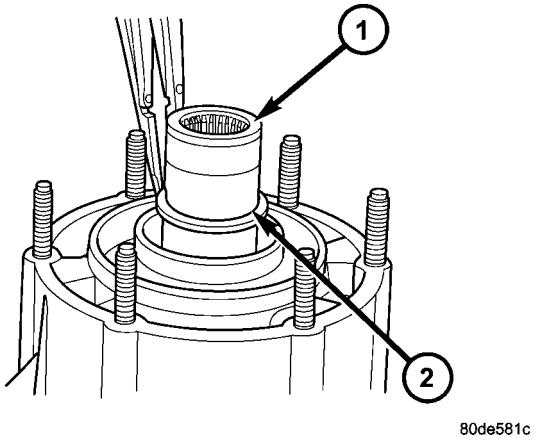

Fig. 54 Install Input Gear Retaining Ring

1 - INPUT GEAR
2 - RETAINING RING

(7) Install snap-ring (2) to hold input/low range gear (1) (Fig. 54) into front bearing.

(8) Install a new input gear seal using Installer 8841 and Handle C-4171.

SHIFT FORKS AND MAINSHAFT

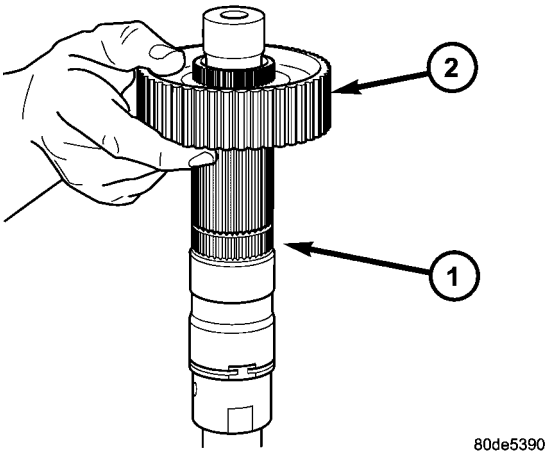

Fig. 55 Install Mode Hub

1 - OUTPUT SHAFT
2 - MODE HUB

(1) Lubricate mainshaft splines with recommended transmission fluid.

(2) Install the mode hub (1) (Fig. 55) onto the output shaft.

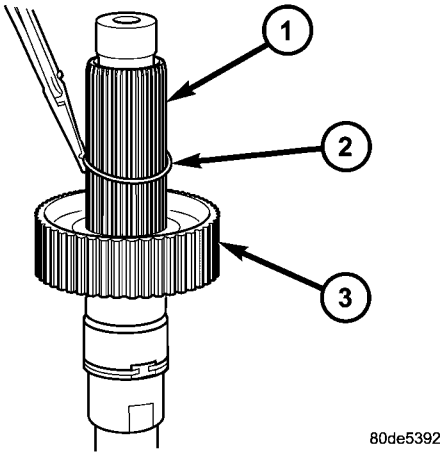

Fig. 56 Install Mode Hub Retaining Ring

1 - OUTPUT SHAFT
2 - RETAINING RING
3 - MODE HUB

(3) Install the mode hub retaining ring (2) (Fig. 56) onto the output shaft (1).

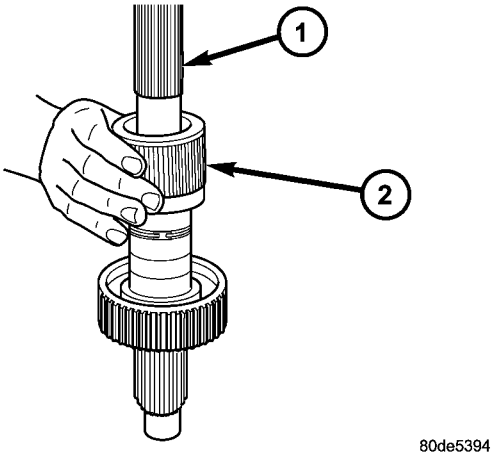

Fig. 57 Install Sprocket Hub

1 - OUTPUT SHAFT
2 - SPROCKET HUB

(4) Install the sprocket hub (2) (Fig. 57) onto the output shaft (1).

TRANSFER CASE - NV241 GENII (Continued)

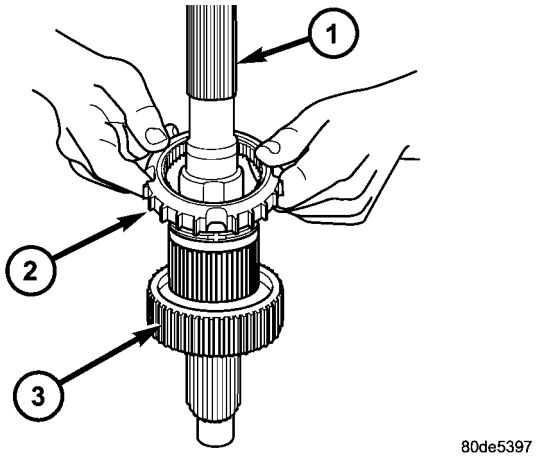

Fig. 58 Install Clutch Gear

1 - OUTPUT SHAFT
2 - CLUTCH GEAR
3 - MODE HUB

(5) Install the clutch gear (2) (Fig. 58) onto the output shaft (1).

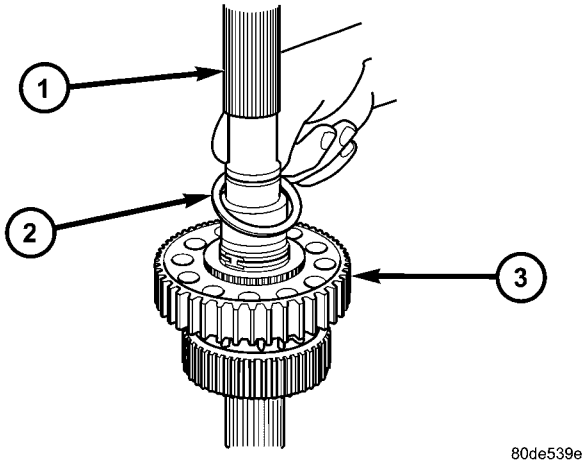

Fig. 60 Install Drive Sprocket Thrust Washer

1 - OUTPUT SHAFT
2 - THRUST WASHER
3 - DRIVE SPROCKET

(7) Install the drive sprocket (3) thrust washer (2) (Fig. 60) onto the output shaft (1).

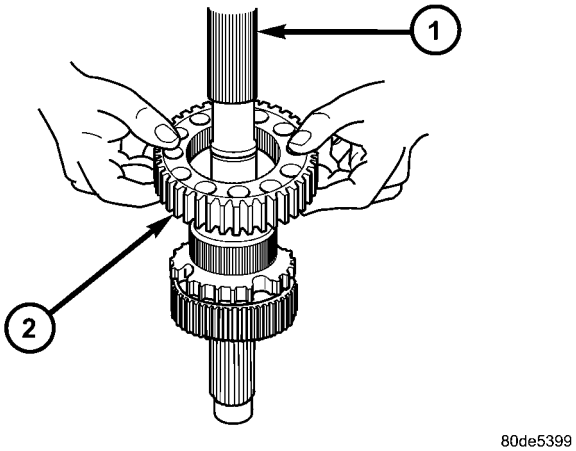

Fig. 59 Install Drive Sprocket

1 - OUTPUT SHAFT
2 - DRIVE SPROCKET

(6) Install the drive sprocket (2) (Fig. 59) onto the output shaft (1).

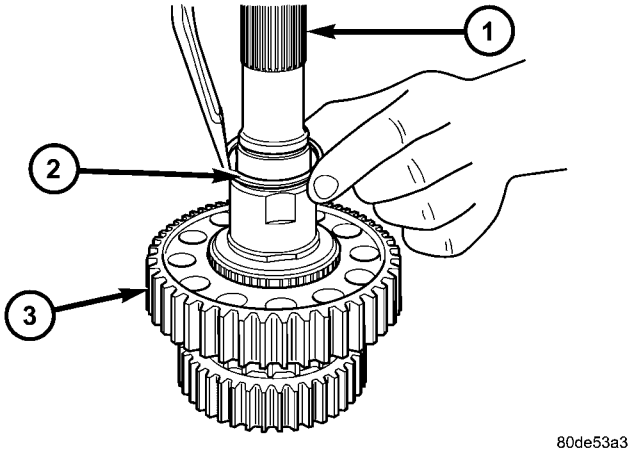

Fig. 61 Install The Drive Sprocket Retaining Ring

1 - OUTPUT SHAFT
2 - RETAINING RING
3 - DRIVE SPROCKET

(8) Install the drive sprocket retaining ring (2) (Fig. 61) onto the output shaft (1).

TRANSFER CASE - NV241 GENII (Continued)

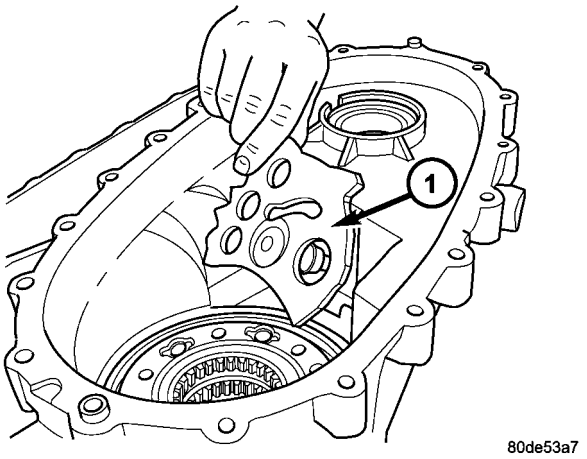

Fig. 62 Install Shift Sector

1 - SHIFT SECTOR

(9) Lubricate sector shaft with transmission fluid and install shift sector (1) (Fig. 62) in case. Position slot in sector so it will be aligned with shift fork pin when shift forks are installed.

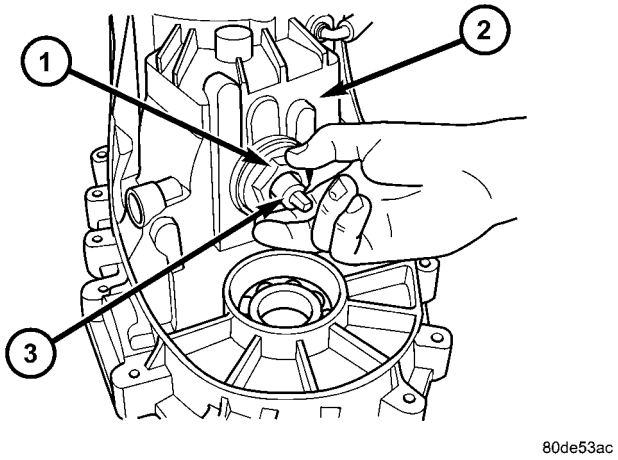

Fig. 63 Install Sector Support

1 - SECTOR SUPPORT
2 - FRONT CASE
3 - SECTOR SHAFT

(10) Install the shift sector support (1) (Fig. 63). Tighten the sector support to 27-42 N·m (20-30 ft.lbs.).

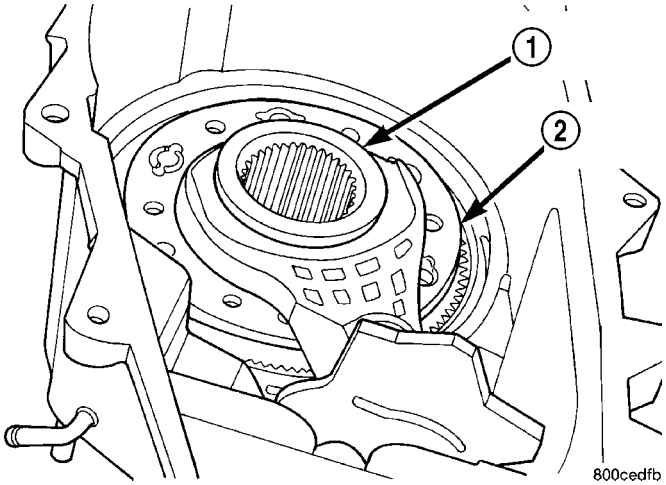

Fig. 64 Install Range Fork And Hub Assembly

1 - RANGE HUB
2 - RANGE FORK

(11) Assemble and install range fork (2) and hub (1) (Fig. 64). Be sure hub is properly seated in low range gear and engaged to the input gear.

(12) Align and insert range fork pin in shift sector slot.

(13) Install the range fork retaining ring.

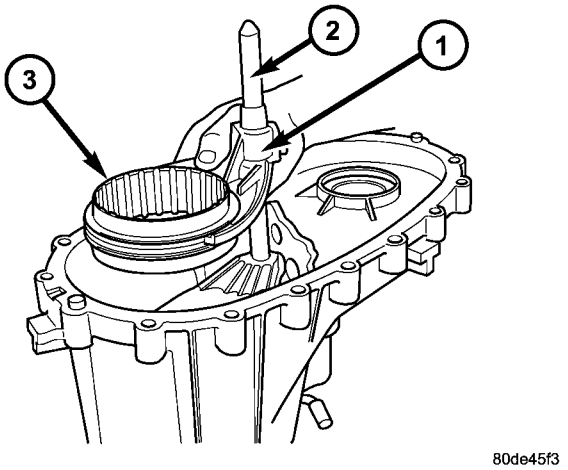

Fig. 65 Install Mode Fork and Shift Rail

1 - MODE FORK
2 - SHIFT RAIL
3 - MODE SLEEVE

(14) Install mode fork (1) (Fig. 65) and shift rail (2) onto the mode sleeve (3).

(15) Install the mode fork, sleeve, and shift rail into the transfer case.

TRANSFER CASE - NV241 GENII (Continued)

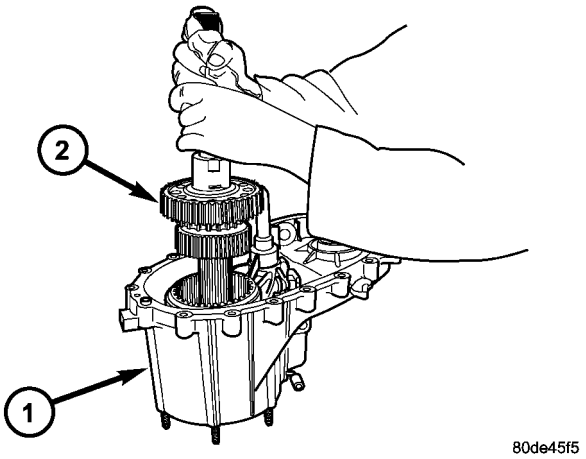

Fig. 66 Install Mainshaft

1 - FRONT CASE
2 - MAINSHAFT

(16) Install mainshaft (2) into the transfer case (1) (Fig. 66). Guide mainshaft through the mode and range sleeves and into the input gear.

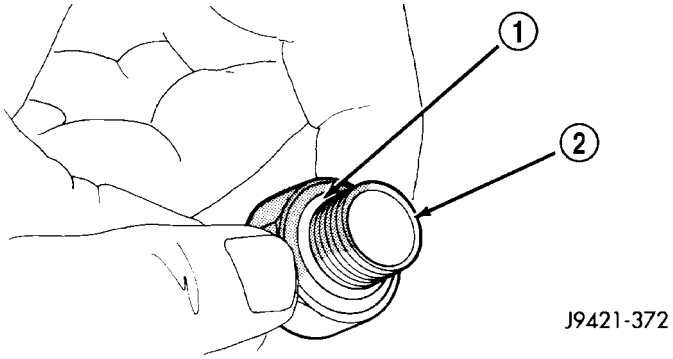

Fig. 67 O-Ring Installation On Detent Plug

1 - O-RING
2 - DETENT PLUG

(17) Install new o-ring on detent plug (2) (Fig. 67).

(18) Install detent plunger (4), spring (3), and plug (2) (Fig. 68). Tighten the plug to 16-25 N·m (12-18 ft. lbs.).

FRONT OUTPUT SHAFT AND DRIVE CHAIN

(1) Install the front output shaft (2) (Fig. 69) into the front output shaft bearing.

(2) Insert front sprocket in drive chain.

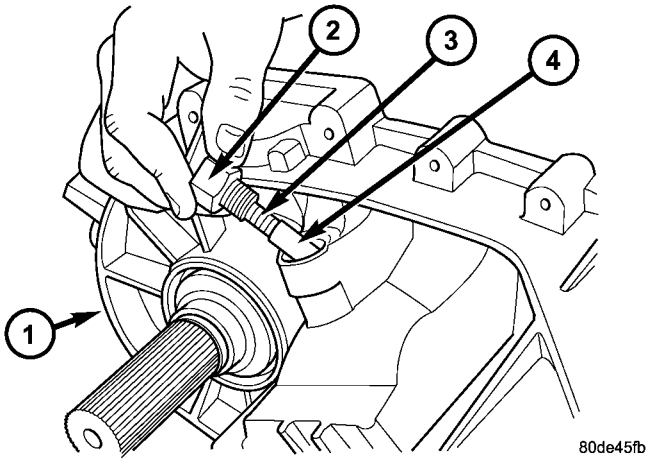

Fig. 68 Install Detent Plug, Spring, and Plunger

1 - FRONT CASE
2 - DETENT PLUG
3 - DETENT SPRING
4 - DETENT PLUNGER

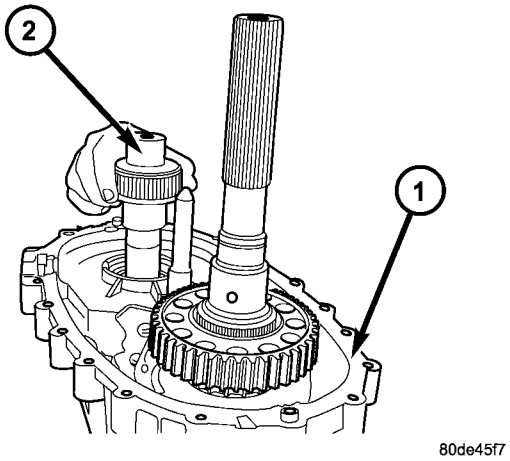

Fig. 69 Install Front Output Shaft

1 - FRONT CASE
2 - FRONT OUTPUT SHAFT

TRANSFER CASE - NV241 GENII (Continued)

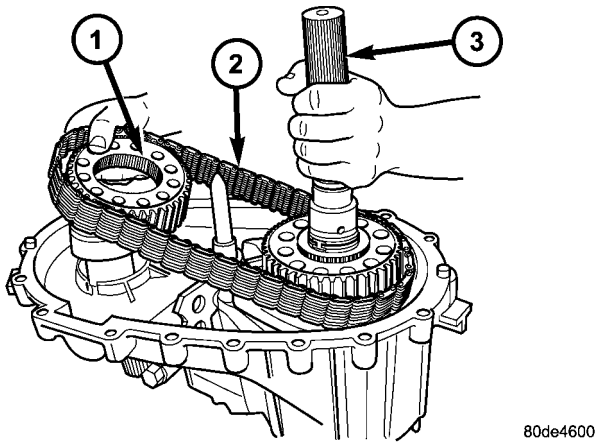

Fig. 70 Install Front Sprocket and Drive Chain

1 - FRONT DRIVE SPROCKET
2 - DRIVE CHAIN
3 - MAINSHAFT

(3) Install drive chain (2) around mainshaft sprocket (1) (Fig. 70). Then position front sprocket over front shaft.

(4) Raise mainshaft about 2.54 cm (one inch) and seat front sprocket on front output shaft.

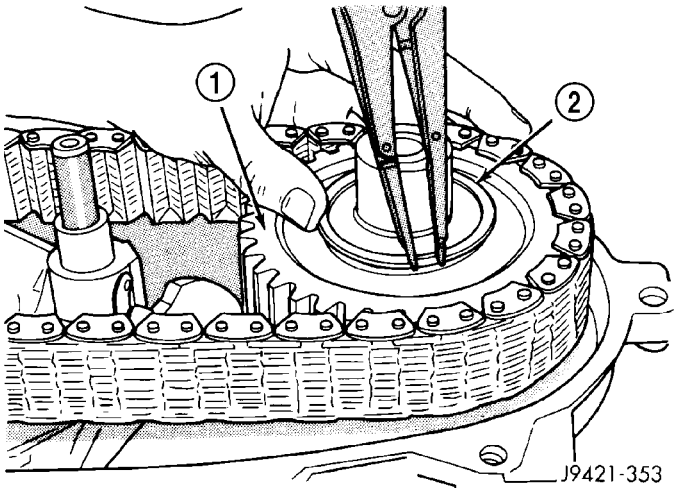

Fig. 71 Front Sprocket Retaining Ring Installation

1 - FRONT SPROCKET
2 - RETAINING RING

(5) If mainshaft and mode sleeve were unseated during chain installation, align and reseat mainshaft in input gear and hub.

(6) Install front sprocket (1) retaining ring (2) (Fig. 71).

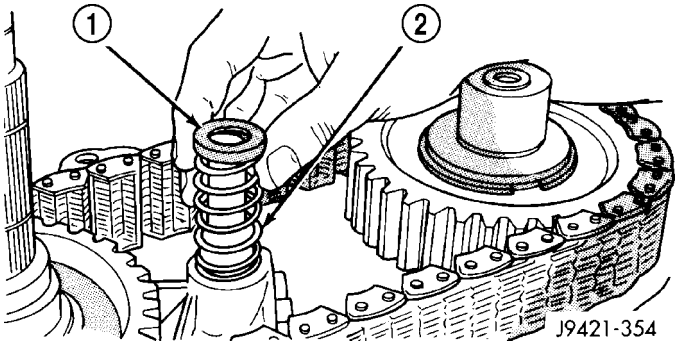

Fig. 72 Shift Rail Spring And Cup Installation

1 - CUP
2 - SPRING

(7) Install spring (2) (Fig. 72) and cup (1) on shift rail.

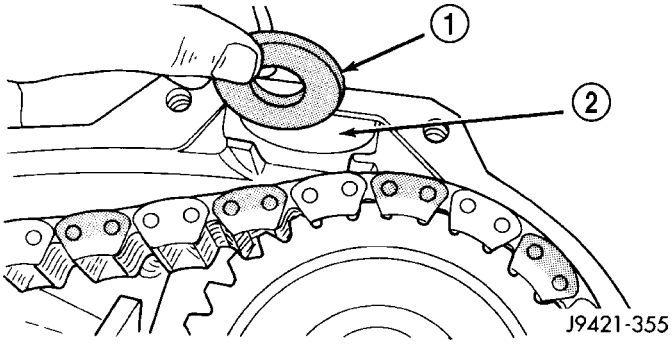

Fig. 73 Case Magnet Installation

1 - MAGNET
2 - CASE POCKET

(8) Insert magnet (1) in front case pocket (2) (Fig. 73).

TRANSFER CASE - NV241 GENII (Continued)

OIL PUMP AND REAR CASE

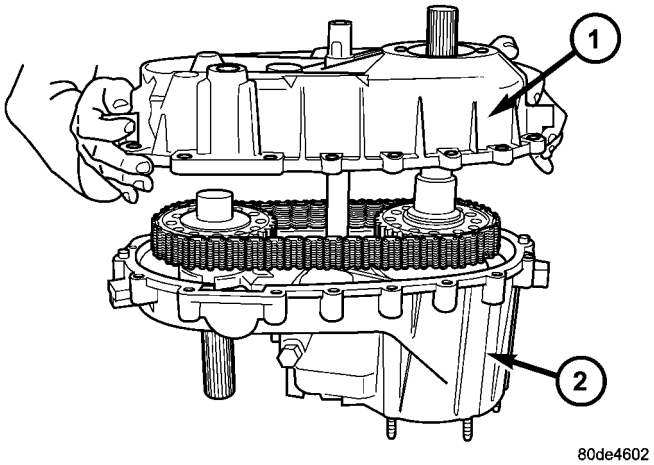

Fig. 74 Install Rear Case

1 - REAR CASE
2 - FRONT CASE

CAUTION: Do not remove the bolts holding the oil pump cover to the rear case half. The oil pump cover is aligned to the rear output shaft inner bearing race and will become mis-aligned if the bolts are loosened. If the transfer case failure has generated any debris which may have become trapped in the oil pump. the rear case and oil pump assembly MUST be replaced.

(1) Apply bead of Mopar® Gasket Maker, or equivalent, to mating surface of front case. Keep sealer bead width to maximum of 3/16 inch. Do not use excessive amount of sealer as excess will be displaced into case interior.

(2) Align oil pump with mainshaft and align shift rail with bore in rear case. Then install rear case (1) (Fig. 74) and oil pump assembly.

(3) Install 4-5 rear case(1)-to front case (2) bolts (Fig. 75) to hold rear case in position. Tighten bolts snug but not to specified torque at this time.

CAUTION: Verify that shift rail, and case alignment dowels are seated before installing any bolts. Case could be cracked if shaft rail or dowels are misaligned.

(4) Apply Loctite™ 242 to remainder of rear case-to-front case bolt threads and install bolts. Tighten bolts to 20-27 N·m (15-24 ft. lbs.),

(5) Install rear output bearing (2) snap-ring (3) (Fig. 76) to output shaft.

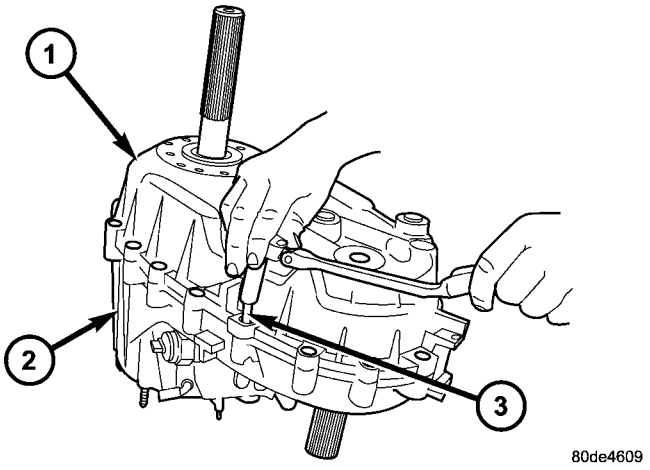

Fig. 75 Install Case Bolts

1 - REAR CASE
2 - FRONT CASE
3 - BOLT

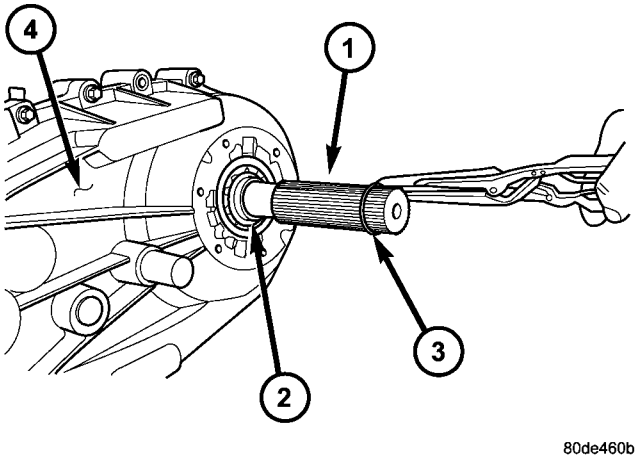

Fig. 76 Install Output Shaft Retaining Ring

1 - REAR OUTPUT SHAFT
2 - OUTPUT SHAFT BEARING
3 - RETAINING RING
4 - TRANSFER CASE

TRANSFER CASE - NV241 GENII (Continued)

REAR EXTENSION

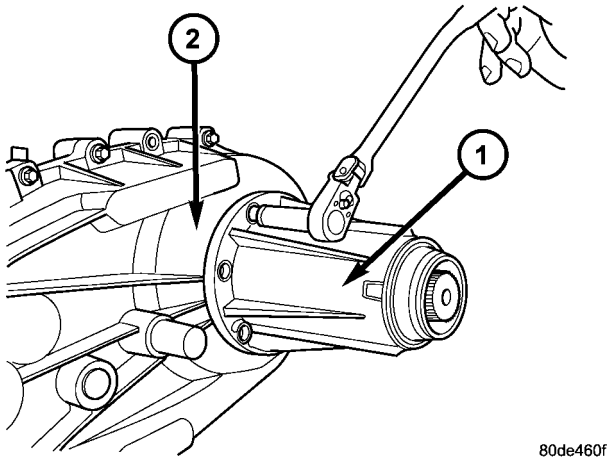

Fig. 77 Install Rear Extension Bolts

1 - EXTENSION HOUSING
2 - TRANSFER CASE

(1) Install new seal in rear extension housing seal with Installer D-163 and Handle C-4171..

(2) Apply bead of Mopar® Gasket Maker, or equivalent, to mating surface of rear extension housing. Keep sealer bead width to maximum of 3/16 inch. Do not use excessive amount of sealer as excess could be displaced into output bearing.

(3) Align and install rear extension housing (1) (Fig. 77) on retainer.

(4) Apply Mopar® Silicone Sealer to threads of rear extension housing bolts. Then install and tighten bolts to 16-24 N·m (12-18 ft. lbs.) torque.

COMPANION FLANGE AND RANGE LEVER

(1) Install range lever (1) (Fig. 78) and bolt (2) on sector shaft. Tighten bolt to 27-34 N·m (20-25 ft. lbs.) torque.

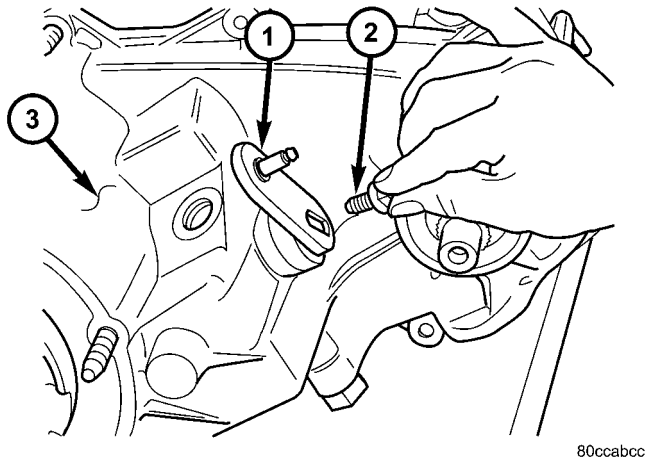

Fig. 78 Install Shift Lever Bolt

1 - RANGE LEVER
2 - RANGE LEVER BOLT
3 - TRANSFER CASE

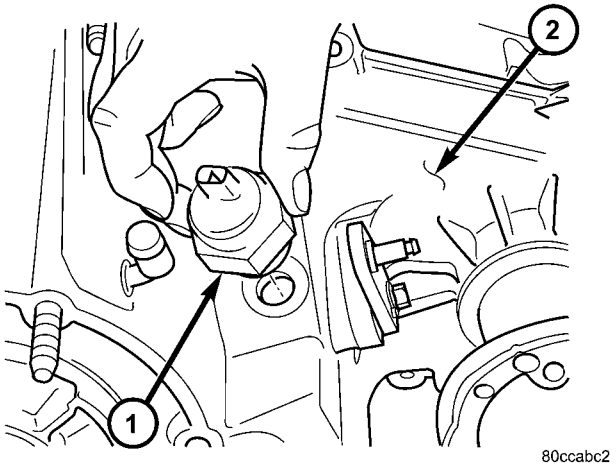

Fig. 79 Install Transfer Case Position Sensor

1 - TRANSFER CASE POSITION SENSOR
2 - TRANSFER CASE

(2) Inspect the o-ring on the transfer case position sensor. Replace the o-ring if necessary.

(3) Install the transfer case position sensor (1) in the front case (2) (Fig. 79). Tighten sensor to 20-34 N·m (15-25 ft. lbs.) torque.

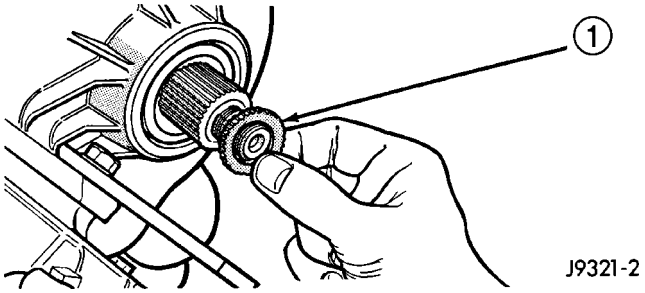

Fig. 80 Seal Washer Installation

1 - SEAL WASHER

(4) Install new seal washer (1) (Fig. 80) on front output shaft.

(5) Lubricate companion flange hub with transmission fluid and install flange onto the front ouput shaft.

(6) Install new flange nut onto front output shaft.

(7) Tighten flange nut to 122-176 N·m (90-130 ft. lbs.) torque.

TRANSFER CASE - NV241 GENII (Continued)

INSTALLATION

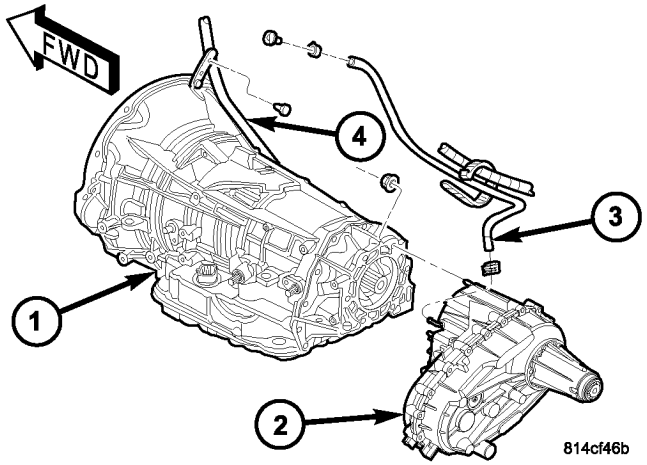

Fig. 81 Install Vent Hose and Transfer Case

1 - AUTOMATIC TRANSMISSION
2 - TRANSFER CASE
3 - VENT HOSE
4 - FILL TUBE

(1) Mount transfer case on a transmission jack.
(2) Secure transfer case to jack with chains.
(3) Position transfer case under vehicle.
(4) Align transfer case and transmission shafts and install transfer case on transmission.
(5) Install and tighten transfer case attaching nuts to 35 N·m (26 ft. lbs.) torque.
(6) Connect vent hose (3) (Fig. 81).

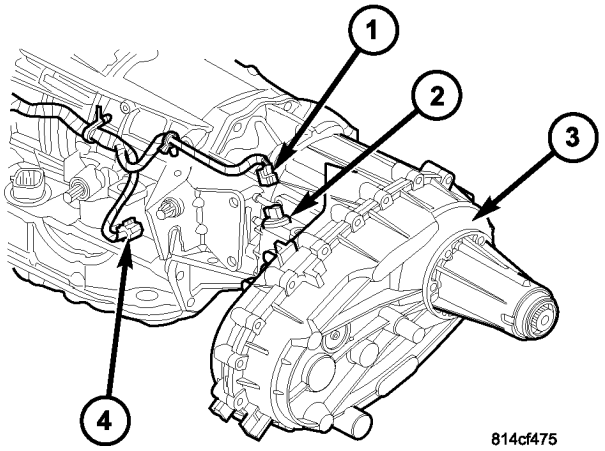

Fig. 82 Transfer Case Position Sensor and Connector

1 - TRANSFER CASE POSITION SENSOR CONNECTOR
2 - TRANSFER CASE POSITION SENSOR
3 - TRANSFER CASE
4 - OUTPUT SPEED SENSOR CONNECTOR

(7) Connect transfer case position sensor connector (1) (Fig. 82) to sensor (2).

(8) Align and connect propeller shafts. (Refer to 3 - DIFFERENTIAL & DRIVELINE/PROPELLER SHAFT/PROPELLER SHAFT - INSTALLATION).

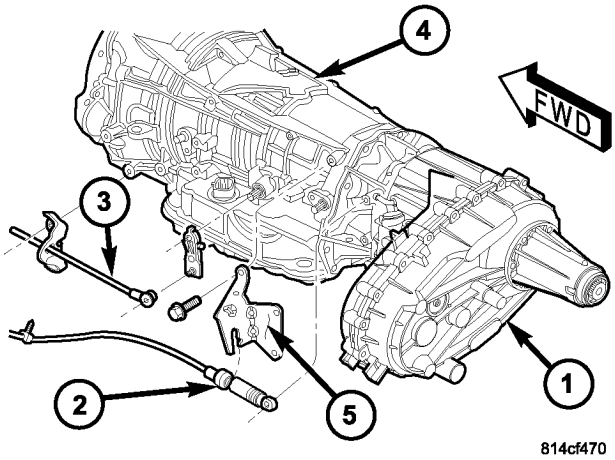

Fig. 83 Install Shift Cables

1 - TRANSFER CASE
2 - TRANSFER CASE SHIFT CABLE
3 - TRANSMISSION SHIFT CABLE
4 - AUTOMATIC TRANSMISSION
5 - TRANSFER CASE SHIFT CABLE BRACKET

(9) Connect shift cable (2) (Fig. 83) to transfer case range (1) lever.

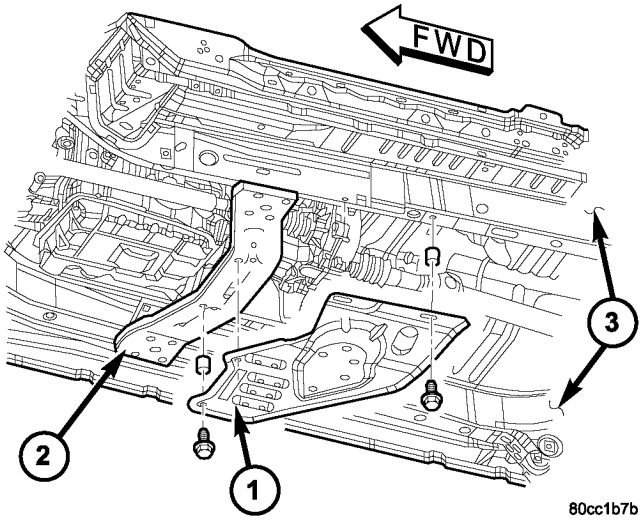

Fig. 84 Install Skid Plate

1 - SKID PLATE
2 - TRANSMISSION CROSSMEMBER
3 - FRAME RAILS

(10) Fill transfer case with correct fluid. Check transmission fluid level. Correct as necessary.
(11) Install skid plate (1) (Fig. 84). (Refer to 13 - FRAME & BUMPERS/FRAME/TRANSFER CASE SKID PLATE - INSTALLATION)

TRANSFER CASE - NV241 GENII (Continued)

(12) Remove transmission jack and support stand.
(13) Lower vehicle and verify transfer case shift operation.

SPECIFICATIONS

TRANSFER CASE - NV241 GENII

TORQUE SPECIFICATIONS

DESCRIPTION	N-m	Ft. Lbs.	In. Lbs.
Plug, Detent	16-24	12-18	-
Plug, Drain/Fill	20-34	15-25	-
Bolt, Extension Housing	16-24	12-18	-
Bolt, Case Half	20-27	15-24	-
Screw, Oil Pump	12-16	8-12	-
Nut, Front Companion Flange	122-176	90-130	
Nut, Range Lever	27-34	20-25	-
Sector Support	27-42	20-30	-
Nuts, Mounting	30-41	20-30	-
Position Sensor	20-34	16-25	-

TRANSFER CASE - NV241 GENII (Continued)

SPECIAL TOOLS

TRANSFER CASE - NV241 GENII

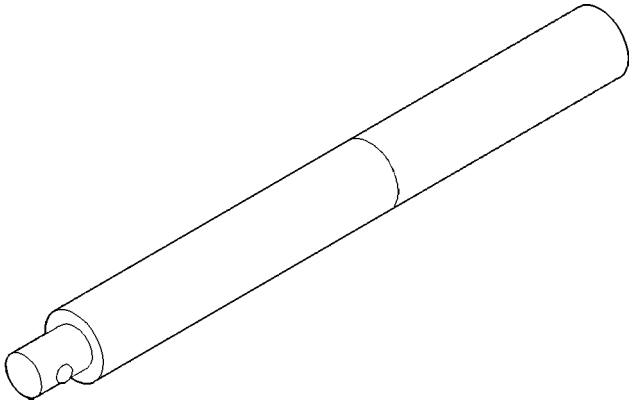

Handle, Universal - C-4171

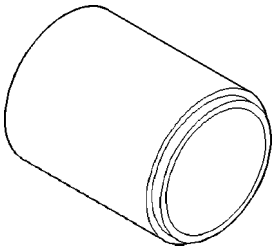

Installer, Seal - 6888

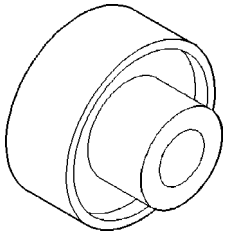

Installer, Bearing - 6953

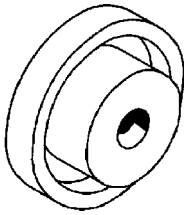

Installer, Seal - C-4210

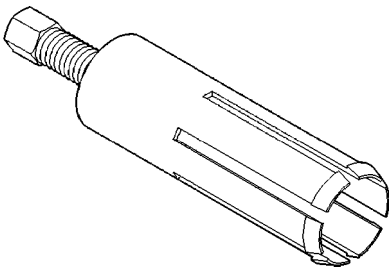

Remover, Bushing - 6957

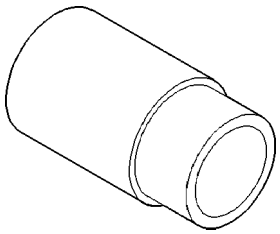

Installer, Bushing - 8157

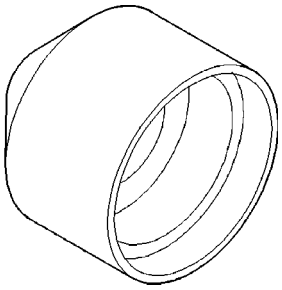

Installer, Seal - D-163

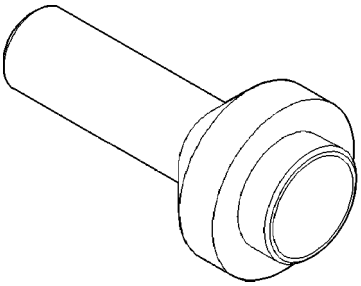

Installer, Seal - 7884

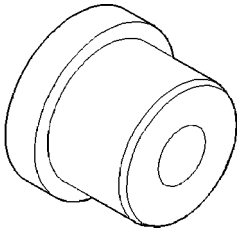

Installer, Bushing - 5066

TRANSFER CASE - NV241 GENII (Continued)

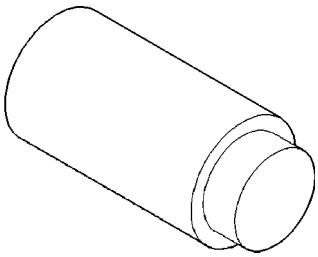

Plug, Extension - C-293-3

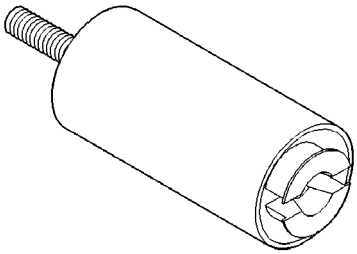

Remover - L-4454

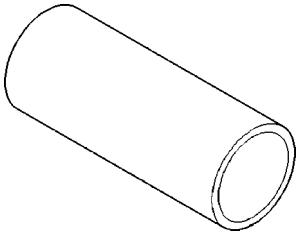

Cup - 8148

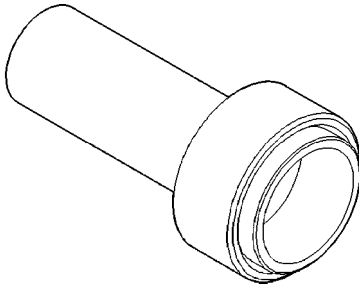

Installer, Pump Housing Seal - 7888

EXTENSION HOUSING SEAL

REMOVAL

(1) Raise and support vehicle.

(2) Remove rear propeller shaft. (Refer to 3 - DIFFERENTIAL & DRIVELINE/PROPELLER SHAFT/PROPELLER SHAFT - REMOVAL)

(3) Using a suitable pry tool or slide-hammer mounted screw, remove the extension housing seal.

INSTALLATION

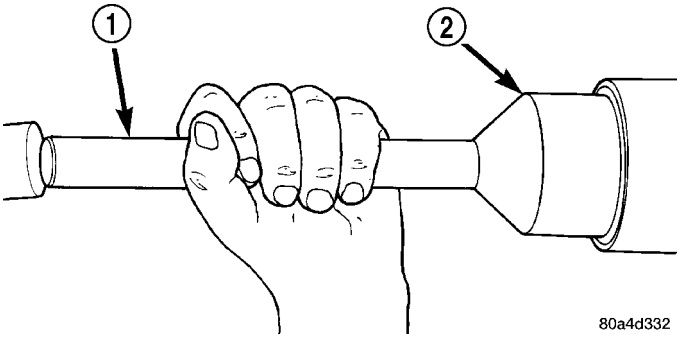

Fig. 85 Install Rear Seal in Extension Housing

1 - SPECIAL TOOL C-4171
2 - SPECIAL TOOL D-163

(1) Clean fluid residue from sealing surface and inspect for defects.

(2) Using Installer D-163 (2) and Handle C-4171 (1), install seal in extension housing (Fig. 85).

(3) Install propeller shaft. (Refer to 3 - DIFFERENTIAL & DRIVELINE/PROPELLER SHAFT/PROPELLER SHAFT - INSTALLATION)

(4) Verify proper transfer case fluid level.

(5) Lower vehicle.

FLUID

STANDARD PROCEDURE - FLUID DRAIN AND FILL

The fill and drain plugs are both in the rear case (Fig. 86). Correct fill level is to the bottom edge of the fill plug hole. Be sure the vehicle is level to ensure an accurate f

luid level check.

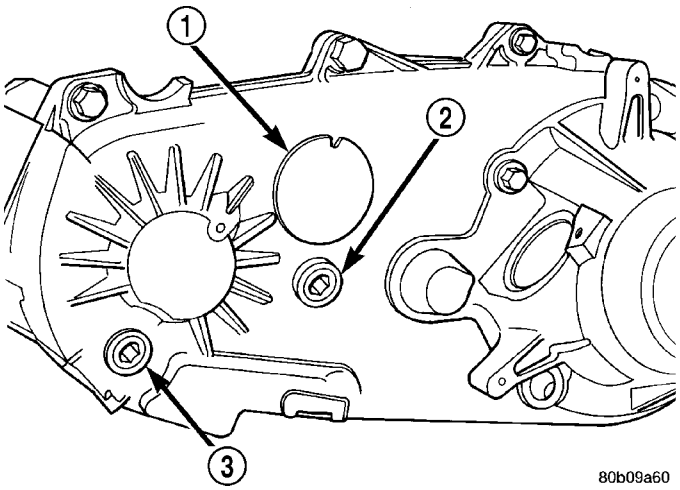

Fig. 86 Fill/Drain Plug and I.D. Tag Location - Typical

1 - I.D. TAG
2 - FILL PLUG
3 - DRAIN PLUG

FRONT OUTPUT SHAFT SEAL

REMOVAL

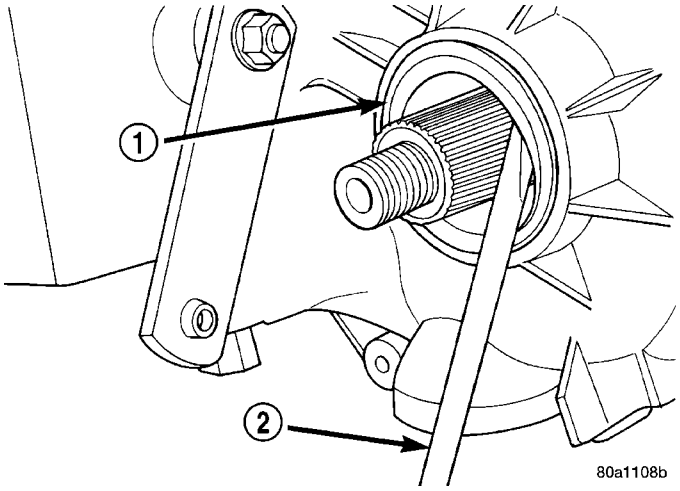

Fig. 87 Remove Front Output Shaft Seal - Typical

1 - OUTPUT SHAFT SEAL
2 - PRYBAR

(1) Raise vehicle.

(2) Remove front propeller shaft. (Refer to 3 - DIFFERENTIAL & DRIVELINE/PROPELLER SHAFT/PROPELLER SHAFT - REMOVAL)

(3) Remove front output shaft companion flange.

(4) Remove seal (1) from front case with pry tool (2) (Fig. 87).

FRONT OUTPUT SHAFT SEAL (Continued)

INSTALLATION

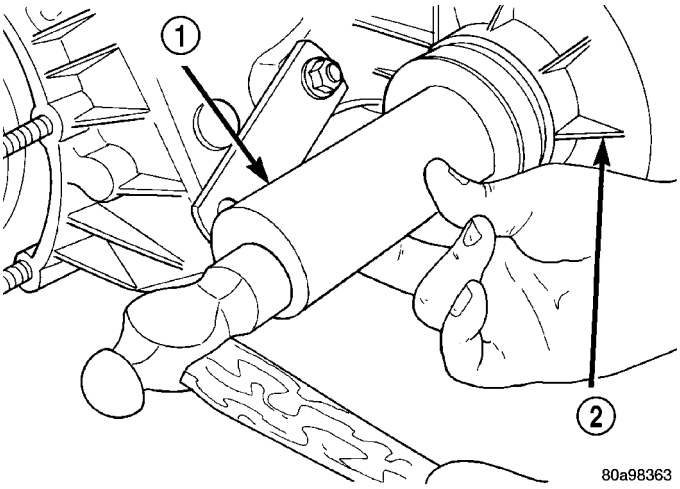

Fig. 88 Front Output Seal Installation - Typical

1 - INSTALLER 6952-A
2 - TRANSFER CASE

(1) Install new front output seal in front case (2) with Installer Tool 6952-A (1) (Fig. 88) as follows:

(a) Place new seal on tool. Garter spring on seal goes toward interior of case.

(b) Start seal in bore with light taps from hammer. Once seal is started, continue tapping seal into bore until installer tool seats against case.

(2) Install the front output shaft companion flange.

(3) Install the front propeller shaft. (Refer to 3 - DIFFERENTIAL & DRIVELINE/PROPELLER SHAFT/PROPELLER SHAFT - INSTALLATION)

POSITION SENSOR

DESCRIPTION

The transfer case position sensor (Fig. 89) is an electronic device whose output can be interpreted to indicate the transfer case's current operating mode. The sensor consists of a five position, resistive multiplexed circuit which returns a specific resistance value to the Powertrain Control Module (PCM) for each transfer case operating mode. The sensor is located on the top of the transfer case, just left of the transfer case centerline and rides against the sector plate roostercomb. The PCM supplies 5VDC (+/- 0.5V) to the sensor and monitors the return voltage to determine the sector plate, and therefore the transfer case, position.

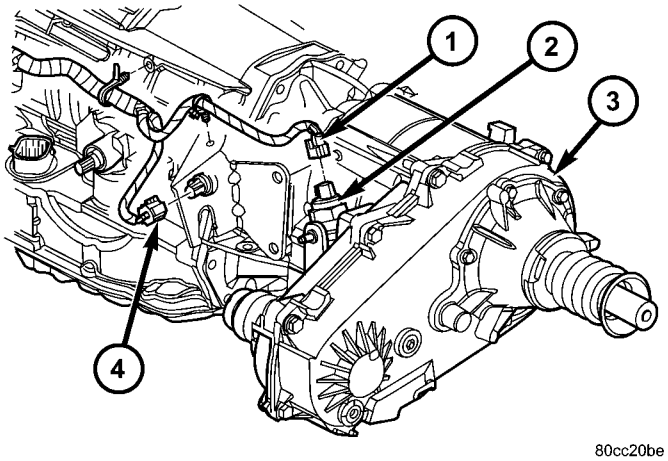

Fig. 89 Transfer Case Position Sensor and Connector

1 - TRANSFER CASE POSITION SENSOR CONNECTOR
2 - TRANSFER CASE POSITION SENSOR
3 - TRANSFER CASE
4 - OUTPUT SPEED SENSOR CONNECTOR

OPERATION

During normal vehicle operation, the Powertrain Control Module (PCM) monitors the transfer case position sensor return voltage to determine the operating mode of the transfer case. Refer to the Operating Mode Versus Resistance table for the correct resistance for each position (Fig. 90).

OPERATING MODE VERSUS RESISTANCE

SENSOR POSITION	OPERATING MODE	SENSOR RESISTANCE (ohms)
1	2WD	1124-1243
2	4WD PART TIME	650-719
3	4WD FULL TIME	389-431
4	NEUTRAL	199-221
5	4WD LOW	57-64

POSITION SENSOR (Continued)

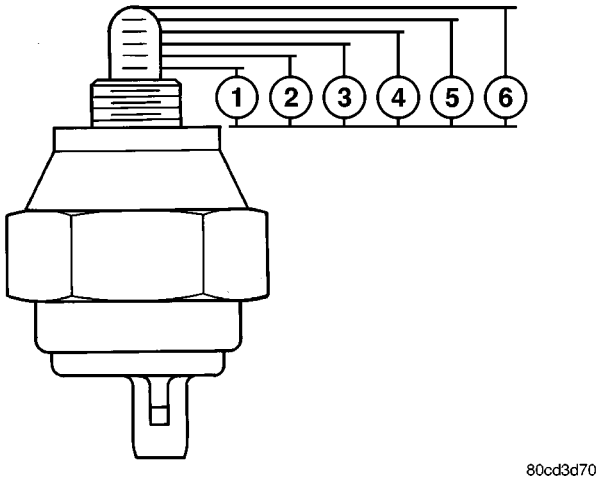

Fig. 90 Position Sensor Linear Movement

1 - POSITION 1 - 10mm ±0.5mm
2 - POSITION 2 - 12mm ±0.5mm
3 - POSITION 3 - 14mm ±0.5mm
4 - POSITION 4 - 16mm ±0.5mm
5 - POSITION 5 - 18mm ±0.5mm
6 - POSITION 6 - 20mm±0.5mm - FULL EXTENSION

REMOVAL

(1) Raise and support the vehicle.

(2) Disengage the transfer case position sensor connector from the position sensor (Fig. 91).

(3) Remove the position sensor from the transfer case.

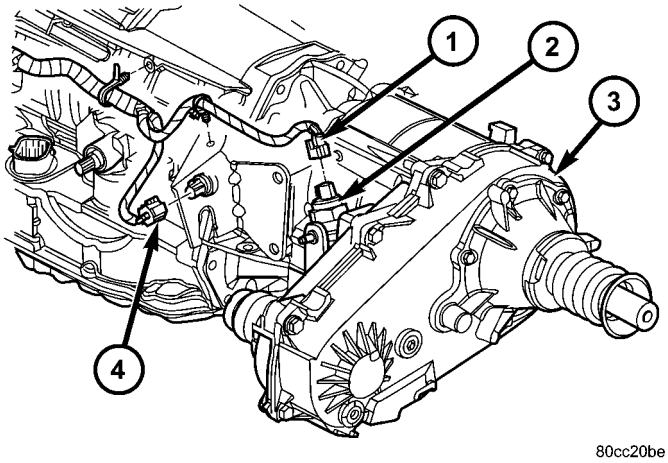

Fig. 91 Transfer Case Position Sensor and Connector

1 - TRANSFER CASE POSITION SENSOR CONNECTOR
2 - TRANSFER CASE POSITION SENSOR
3 - TRANSFER CASE
4 - OUTPUT SPEED SENSOR CONNECTOR

INSTALLATION

(1) Inspect the o-ring seal on the transfer case position sensor. Replace the o-ring if necessary.

(2) Install the transfer case position sensor into the transfer case. Torque the sensor to 20-34 N·m (15-25 ft.lbs.).

(3) Engage the transfer case position sensor connector to the position sensor.

(4) Lower vehicle.

(5) Verify proper sensor operation.

SHIFT LEVER

REMOVAL

(1) Shift transfer case into 4L.

(2) Raise vehicle.

(3) Remove clip securing the transfer case shift cable to the shift cable support bracket (Fig. 92) and (Fig. 93).

(4) Disengage any additional shift cable routing clips, if necessary.

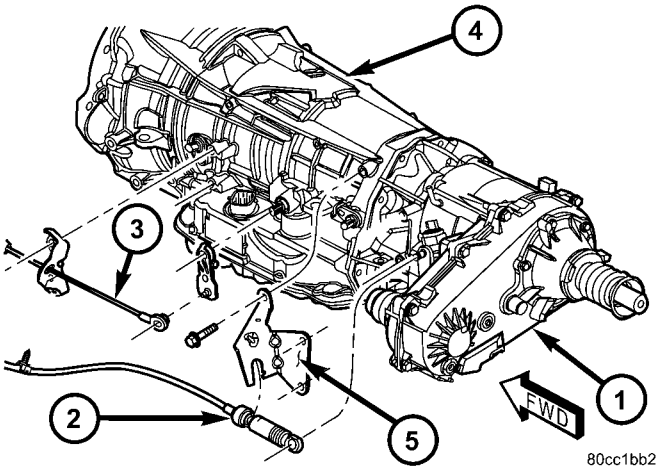

Fig. 92 Transfer Case Shift Cable - Automatic Transmission

1 - TRANSFER CASE
2 - TRANSFER CASE SHIFT CABLE
3 - TRANSMISSION SHIFT CABLE
4 - AUTOMATIC TRANSMISSION
5 - TRANSFER CASE SHIFT CABLE BRACKET

(5) Disengage the shift cable from the transfer case manual lever.

(6) Lower vehicle.

(7) Remove the floor console as necessary to access the shifter mechanism. (Refer to 23 - BODY/INTERIOR/FLOOR CONSOLE - REMOVAL)

(8) Remove the nuts attaching lever assembly to floorpan and remove assembly and shift cable (Fig. 94).

(9) Remove the shifter mechanism and cable assembly from the vehicle.

SHIFT LEVER (Continued)

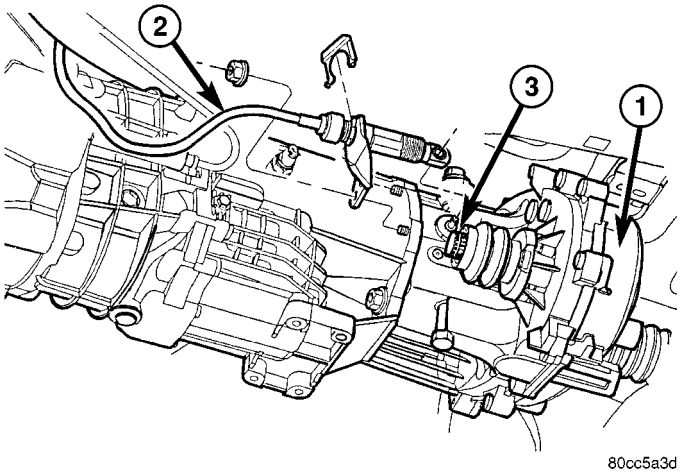

Fig. 93 Transfer Case Shift Cable - Manual Transmission

1 - TRANSFER CASE
2 - SHIFT CABLE
3 - MANUAL LEVER

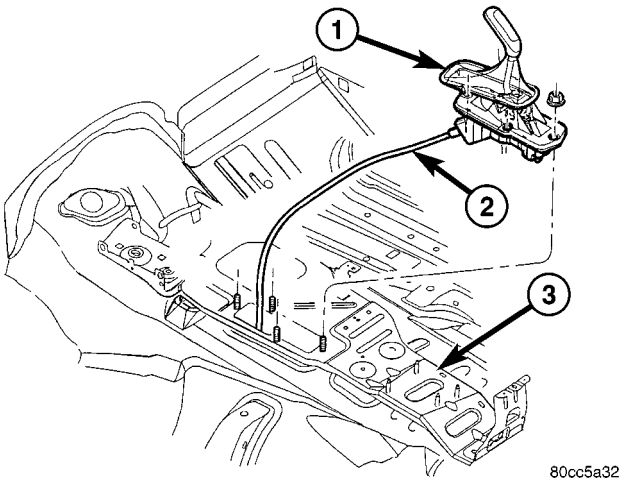

Fig. 94 Transfer Case Shifter Assembly

1 - SHIFTER ASSEMBLY
2 - SHIFT CABLE
3 - FLOOR PAN

INSTALLATION

(1) Route the shift cable through the opening in the floor pan.

(2) Position the shift mechanism over the shifter retaining studs on the floor pan.

(3) Install the nuts to hold the shifter mechanism to the floor pan. Tighten the nuts to 11.86 N·m (105 in.lbs.).

(4) Install any floor console components previously removed. (Refer to 23 - BODY/INTERIOR/FLOOR CONSOLE - INSTALLATION)

(5) Verify that the floor shifter is in the 4L position.

(6) Raise vehicle.

(7) Route the shift cable through the opening in the shift cable support bracket.

(8) Install the cable and a new spring clip into the slot in the support bracket.

(9) Install any additional routing clips on the shift cable.

(10) Verify that the transfer case is in the 4L position. The 4L position for the transfer case is with the manual lever to the full rearward position.

(11) Attach the shift cable to the transfer case manual lever.

(12) Lower vehicle and check for proper transfer case shifter operation.

TRANSFER CASE - NV242

TABLE OF CONTENTS

page

TRANSFER CASE - NV242
DESCRIPTION 347
OPERATION 348
DIAGNOSIS AND TESTING - TRANSFER CASE - NV242 348
REMOVAL 349
DISASSEMBLY 350
CLEANING 359
INSPECTION 359
ASSEMBLY 362
INSTALLATION 375
SPECIFICATIONS
NV242 TRANSFER CASE 376
SPECIAL TOOLS
TRANSFER CASE - NV242 376
FLUID
STANDARD PROCEDURE - FLUID DRAIN AND FILL 379

page

FRONT OUTPUT SHAFT SEAL
REMOVAL 379
INSTALLATION 379
POSITION SENSOR
DESCRIPTION 379
OPERATION 380
REMOVAL 381
INSTALLATION 381
REAR OUTPUT SHAFT SEAL
REMOVAL 381
INSTALLATION 382
SHIFT LEVER
REMOVAL 382
INSTALLATION 383

TRANSFER CASE - NV242

DESCRIPTION

The NV242 is a full-time transfer case. It provides full time 2-wheel, or 4-wheel drive operation.

A differential in the transfer case is used to control torque transfer to the front and rear axles. A low range gear provides increased low speed torque capability for off road operation. The low range provides a 2.72:1 reduction ratio.

The geartrain is mounted in two aluminum case halves attached with bolts. The mainshaft front and rear bearings are mounted in aluminum retainer housings bolted to the case halves.

TRANSFER CASE IDENTIFICATION

A circular ID tag is attached to the rear case of each transfer case (Fig. 1). The ID tag provides the transfer case model number, assembly number, serial number, and low range ratio.

The transfer case serial number also represents the date of build.

OPERATING RANGES

NV242 operating ranges are 2WD (2-wheel drive), 4x4 part-time, 4x4 full time, 4 Lo, and Neutral.

The 2WD and 4x4 full time ranges can be used at any time and on any road surface.

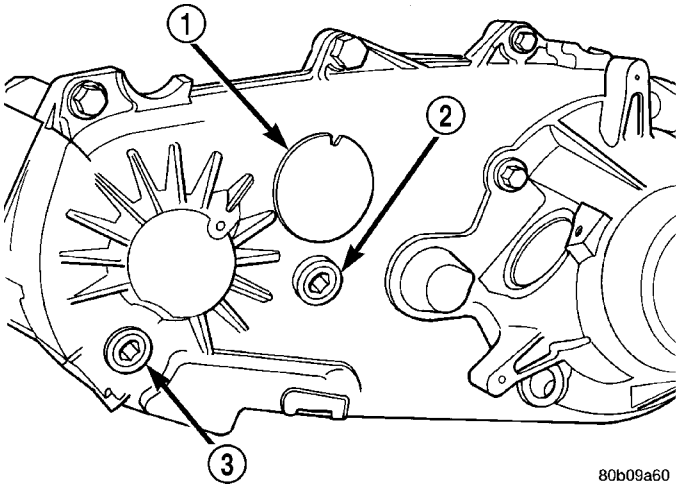

Fig. 1 Fill/Drain Plug And I.D. Tag Locations - Typical

1 - I.D. TAG
2 - FILL PLUG
3 - DRAIN PLUG

The 4x4 part-time and 4 Lo ranges are for off road use only. The only time these ranges can be used on hard surface roads, is when the surface is covered with snow and ice.

SHIFT MECHANISM

Operating ranges are selected with a floor mounted shift lever. The shift lever is connected to the trans-

fer case range lever by a shift cable. A straight line shift pattern is used. Range positions are marked on the shifter bezel cover plate, or on the shift knob.

OPERATION

The input gear is splined to the transmission output shaft. It drives the mainshaft through the planetary gear and range hub. The front output shaft is operated by a drive chain that connects the shaft to a drive sprocket on the mainshaft. The drive sprocket is engaged/disengaged by the mode fork, which operates the mode sleeve and hub. The sleeve and hub are not equipped with a synchro mechanism for shifting.

DIAGNOSIS AND TESTING - TRANSFER CASE - NV242

DIAGNOSIS CHART

CONDITION	POSSIBLE CAUSE	CORRECTION
Transfer case difficult to shift or will not shift into desired range.	1) Transfer case shift cable binding.	1) Repair or replace cable as necessary.
	2) Insufficient or incorrect lubricant.	2) Drain and refill transfer case with the correct type and quantity of lubricant.
	3) Internal transfer case components binding, worn, or damaged.	3) Repair or replace components as necessary.
Transfer case noisy in all drive modes.	1) Insufficient or incorrect lubricant.	1) Drain and refill transfer case with the correct type and quantity of lubricant.
Lubricant leaking from transfer case seals or vent.	1) Transfer case overfilled.	1) Drain lubricant to the correct level.
	2) Transfer case vent closed or restricted.	2) Clean or replace vent as necessary.
	3) Transfer case seals damaged or installed incorrectly.	3) Replace suspect seal.
Transfer case will not shift through 4X4 part time range (light remains on)	1) Incomplete shift due to drivetrain torque load.	1) Momentarily release the accelerator pedal to complete the shift.
	2) Incorrect tire pressure.	2) Correct tire pressure as necessary.
	3) Excessive Tire wear.	3) Correct tire condition as necessary.
	4) Excessive vehicle loading.	4) Correct as necessary.

TRANSFER CASE - NV242 (Continued)

REMOVAL

(1) Shift transfer case into NEUTRAL.
(2) Raise vehicle.
(3) Remove skid plate (Fig. 2).
(4) Drain transfer case lubricant.
(5) Mark front and rear propeller shaft yokes for alignment reference.
(6) Disconnect front/rear propeller shafts at transfer case.
(7) Disconnect transfer case position sensor connector (Fig. 3).
(8) Disconnect transfer case shift cable at the range lever (Fig. 4).
(9) Disconnect the transfer case shift cable from the shift cable bracket.
(10) Disconnect transfer case vent hose (Fig. 5).
(11) Support transfer case with transmission jack.
(12) Secure transfer case to jack with chains.
(13) Remove nuts attaching transfer case to transmission.
(14) Pull transfer case and jack rearward to disengage transfer case (Fig. 5).
(15) Remove transfer case from under vehicle.

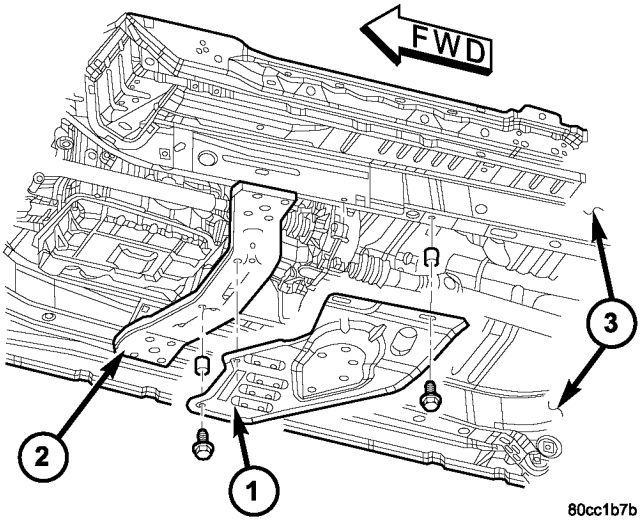

Fig. 2 Remove Skid Plate

1 - SKID PLATE
2 - TRANSMISSION CROSSMEMBER
3 - FRAME RAILS

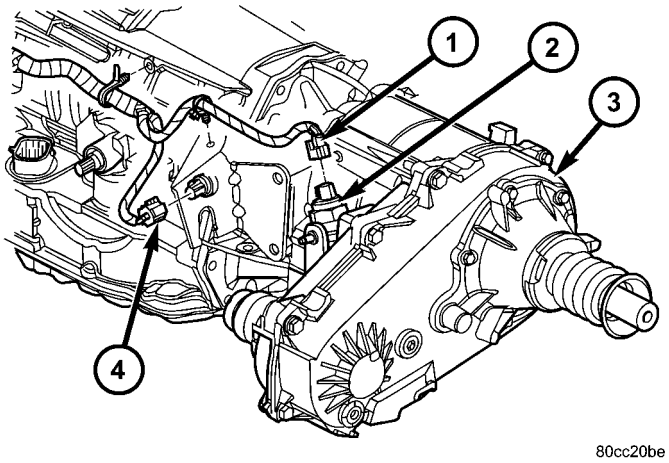

Fig. 3 Transfer Case Position Sensor and Connector

1 - TRANSFER CASE POSITION SENSOR CONNECTOR
2 - TRANSFER CASE POSITION SENSOR
3 - TRANSFER CASE
4 - OUTPUT SPEED SENSOR CONNECTOR

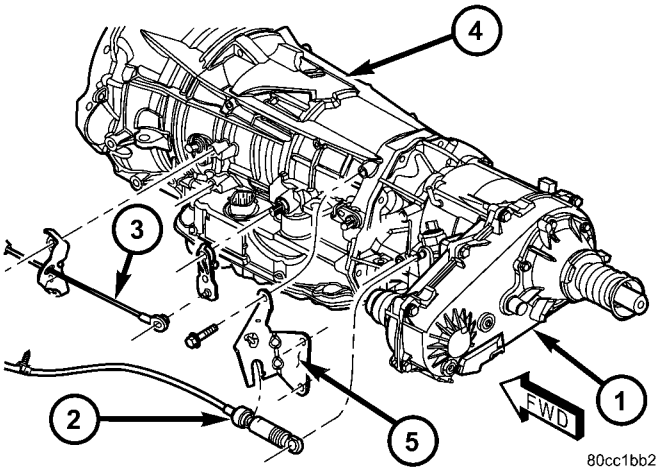

Fig. 4 Remove Shift Cables

1 - TRANSFER CASE
2 - TRANSFER CASE SHIFT CABLE
3 - TRANSMISSION SHIFT CABLE
4 - AUTOMATIC TRANSMISSION
5 - TRANSFER CASE SHIFT CABLE BRACKET

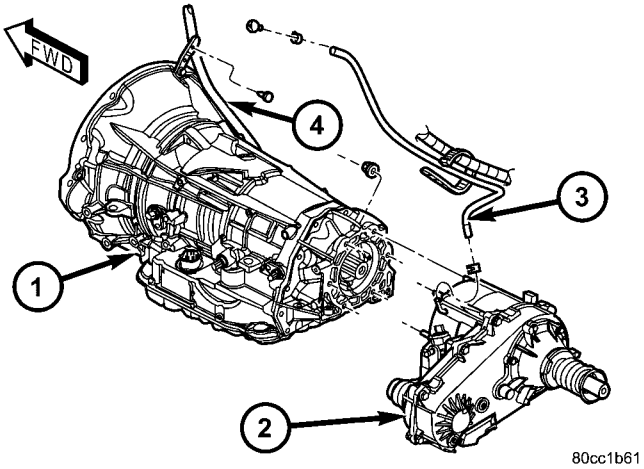

Fig. 5 Remove Vent Hose and Transfer Case

1 - AUTOMATIC TRANSMISSION
2 - TRANSFER CASE
3 - VENT HOSE
4 - FILL TUBE

TRANSFER CASE - NV242 (Continued)

DISASSEMBLY

REAR RETAINER

(1) Remove output shaft boot. Spread band clamp that secures boot on slinger with a suitable awl. Then slide boot off shaft (Fig. 6).

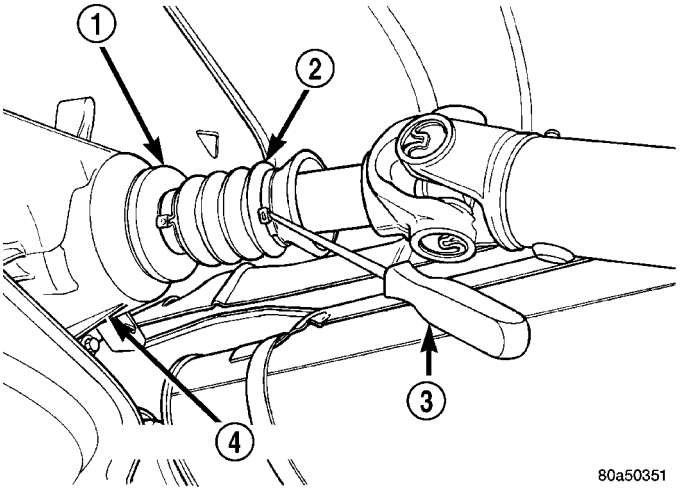

Fig. 6 Output Boot - Typical

1 - SLINGER
2 - BOOT
3 - AWL
4 - TRANSFER CASE

(2) Using puller MD-998056-A, remove rear slinger (Fig. 7).

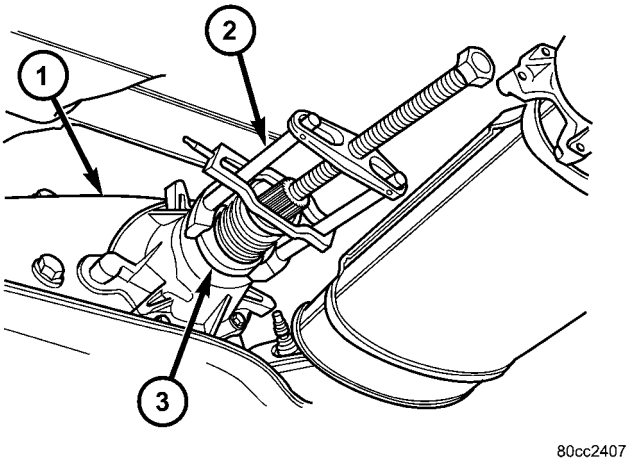

Fig. 7 Rear Slinger Removal

1 - TRANSFER CASE
2 - PULLER MD-998056-A
3 - REAR SLINGER

(3) Remove rear seal from retainer (Fig. 8). Use pry tool, or collapse seal with punch to remove it.

(4) Remove rear output bearing I.D. retaining ring (Fig. 9).

(5) Remove rear retainer bolts.

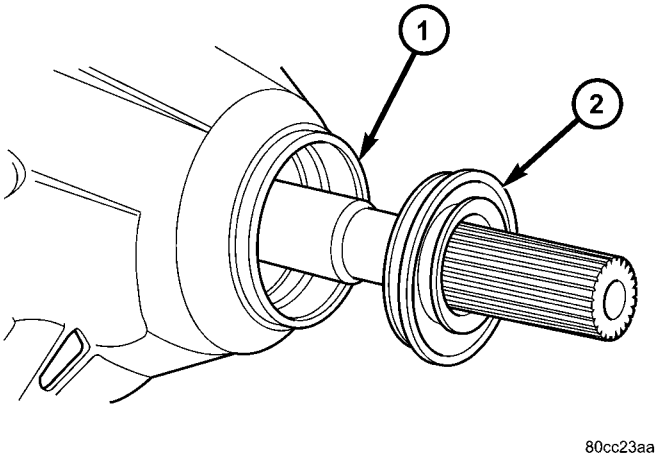

Fig. 8 Rear Retainer Seal

1 - REAR RETAINER
2 - OUTPUT SHAFT SEAL

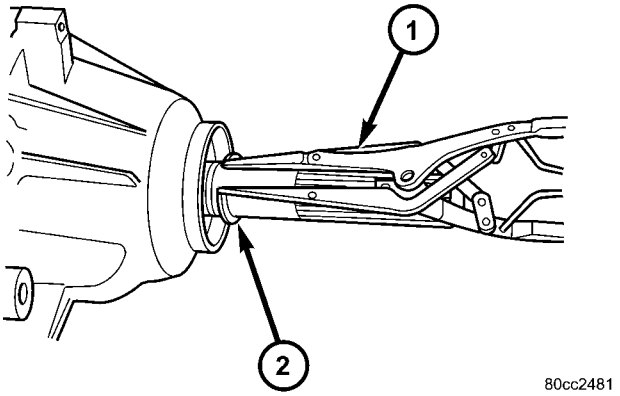

Fig. 9 Output Shaft Rear Bearing Retaining Ring

1 - SNAP-RING PLIERS
2 - RETAINING RING

(6) Remove rear retainer. Tap retainer with mallet and pry upward to break sealer bead. Then slide retainer off case and output shaft (Fig. 10).

(7) Remove rear bearing O.D. retaining ring with snap-ring pliers. Then tilt pump and slide it off output shaft (Fig. 11)

(8) Remove pickup tube O-ring from pump (Fig. 12) but do not disassemble pump; it is not a serviceable part.

(9) Remove bolts attaching rear case to front case (Fig. 13). Note position of the two black finish bolts at each end of the case. These bolts go through the case dowels and require a washer under the bolt head.

(10) Remove rear case from front case (Fig. 14). Insert screwdrivers into slots cast into each end of

TRANSFER CASE - NV242 (Continued)

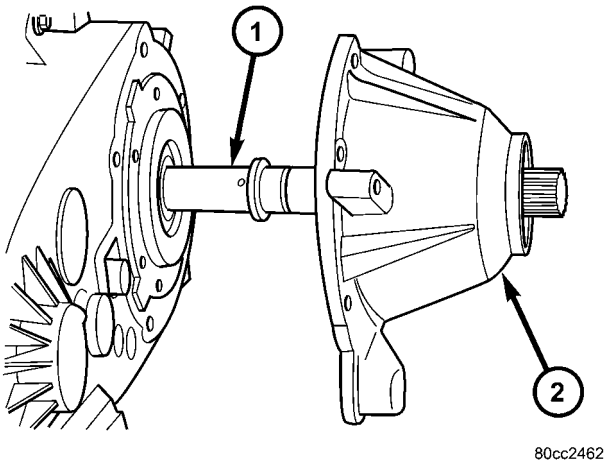

Fig. 10 Rear Retainer Removal

1 - MAINSHAFT
2 - REAR RETAINER

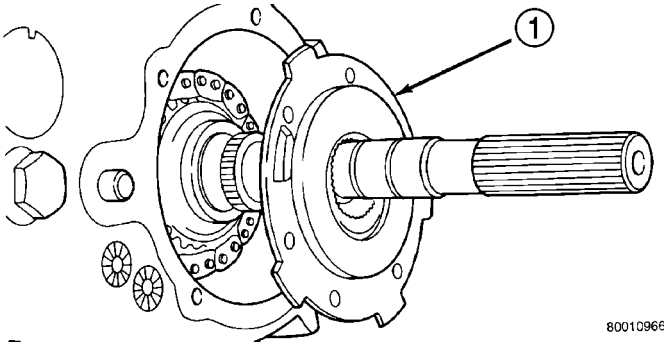

Fig. 11 Oil Pump Removal

1 - OIL PUMP

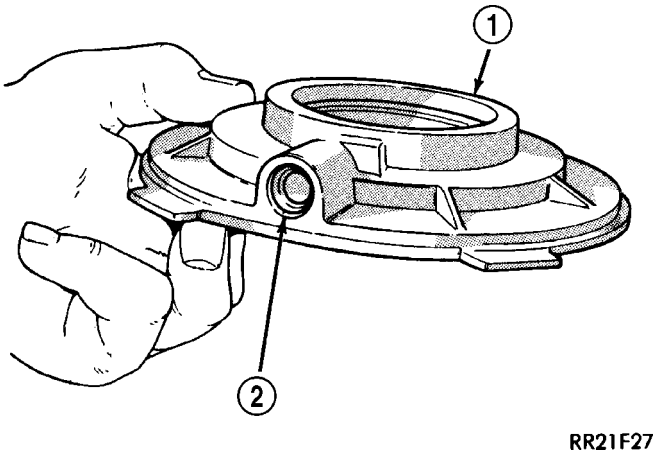

Fig. 12 Pickup Tube O-Ring Location

1 - OIL PUMP
2 - O-RING

case. Then pry upward to break sealer bead and remove rear case.

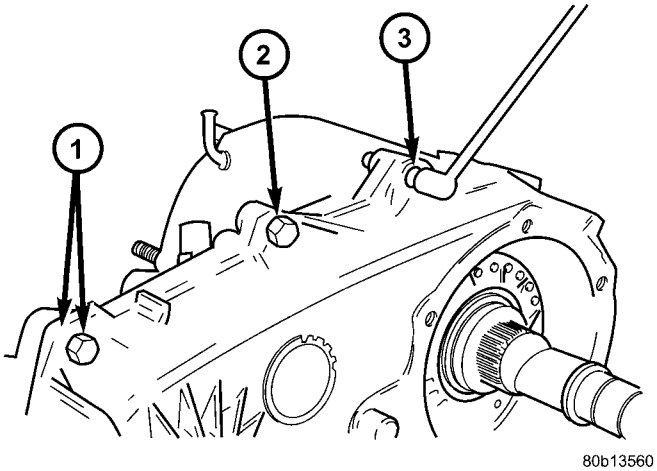

Fig. 13 Spline And Dowel Bolt Locations

1 - DOWEL BOLT AND WASHER (2)
2 - CASE BOLTS
3 - SPLINE HEAD BOLT (1)

CAUTION: Do not pry on the sealing surface of either case half as the surfaces will become damaged.

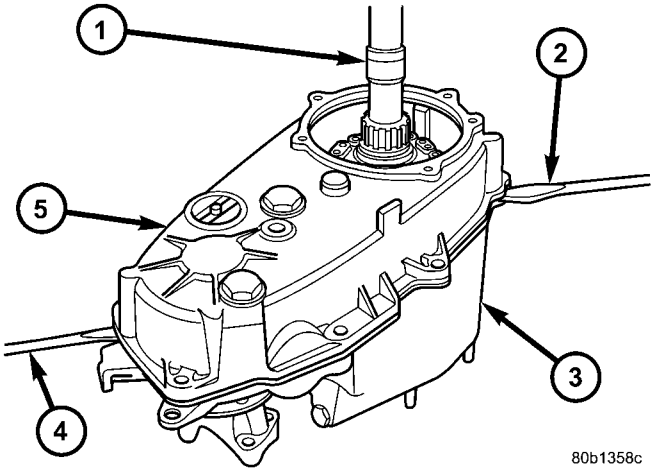

Fig. 14 Loosening/Removing Rear Case

1 - MAINSHAFT
2 - SCREWDRIVER
3 - FRONT CASE
4 - SCREWDRIVER
5 - REAR CASE

TRANSFER CASE - NV242 (Continued)

(11) Remove oil pickup tube and screen from rear case (Fig. 15).

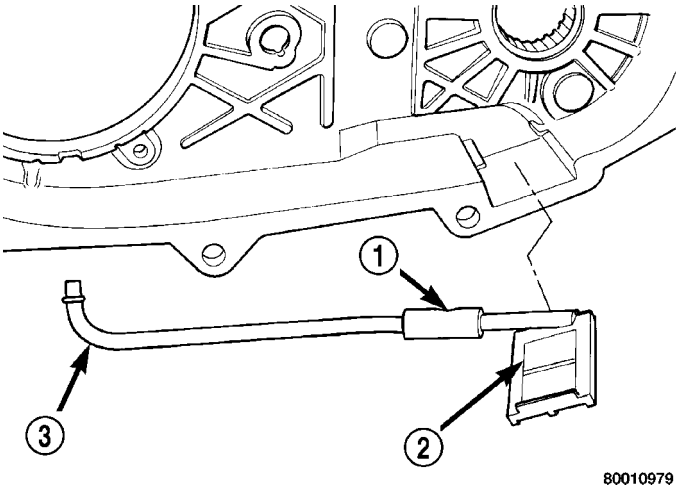

Fig. 15 Oil Pickup Screen, Hose And Tube Removal

1 - CONNECTING HOSE
2 - PICKUP SCREEN
3 - PICKUP TUBE

COMPANION FLANGE AND RANGE LEVER

(1) Remove transfer case position sensor (Fig. 16).

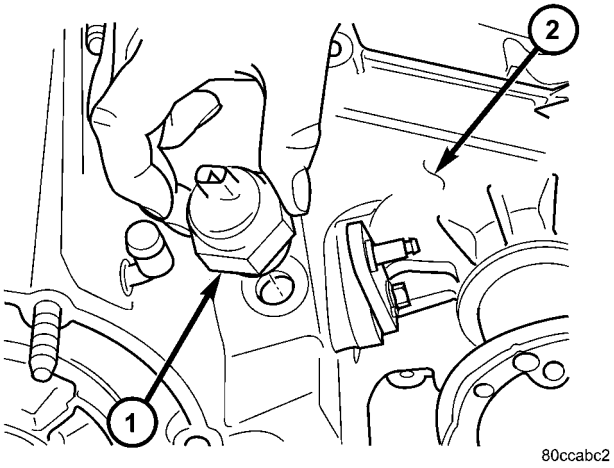

Fig. 16 Remove Transfer Case Position Sensor

1 - TRANSFER CASE POSITION SENSOR
2 - TRANSFER CASE

(2) Install two bolts (Fig. 17) partially into the propellor shaft companion flange, 180° from each other.

(3) Install the rectangular end of the Flange Holder C-3281 over the bolts to hold the companion flange stationary and remove the nut holding the companion flange to the output shaft.

(4) Use Remover C-452 (Fig. 18) to remove the companion flange.

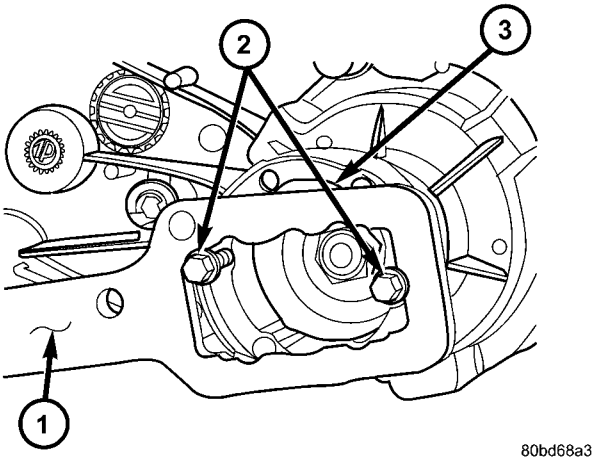

Fig. 17 Hold Companion Flange - Typical

1 - HOLDER C-3281
2 - BOLTS
3 - COMPANION FLANGE

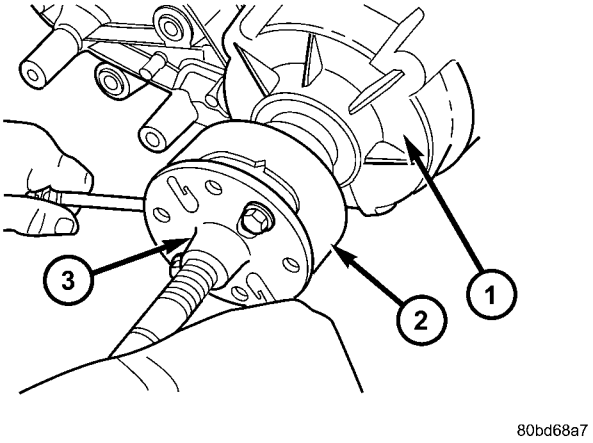

Fig. 18 Remove Companion Flange - Typical

1 - TRANSFER CASE
2 - COMPANION FLANGE
3 - REMOVER C-452

(5) Remove seal washer from front output shaft. Discard washer as it should not be reused.

(6) Remove the bolt (Fig. 19) that attaches the range lever to sector shaft. Then move sector to neutral position and remove range lever from shaft.

NOTE: Be sure to note the orientation of the range lever (lever up or down) so that it may be re-installed in the same direction.

TRANSFER CASE - NV242 (Continued)

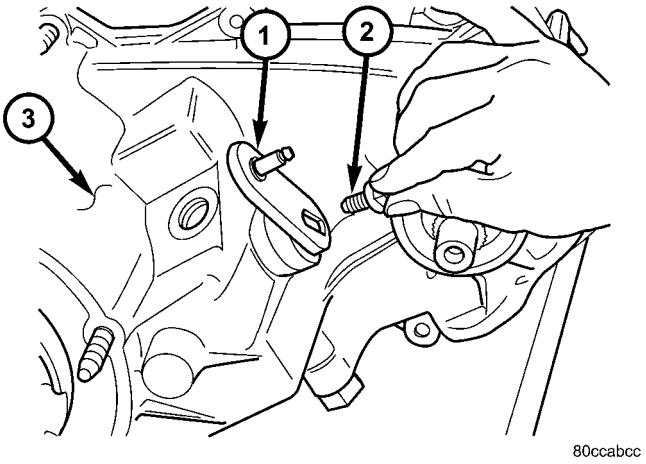

Fig. 19 Remove Shift Lever Bolt - Typical

1 - RANGE LEVER
2 - RANGE LEVER BOLT
3 - TRANSFER CASE

FRONT OUTPUT SHAFT AND DRIVE CHAIN

(1) Remove drive sprocket snap-ring (Fig. 20).

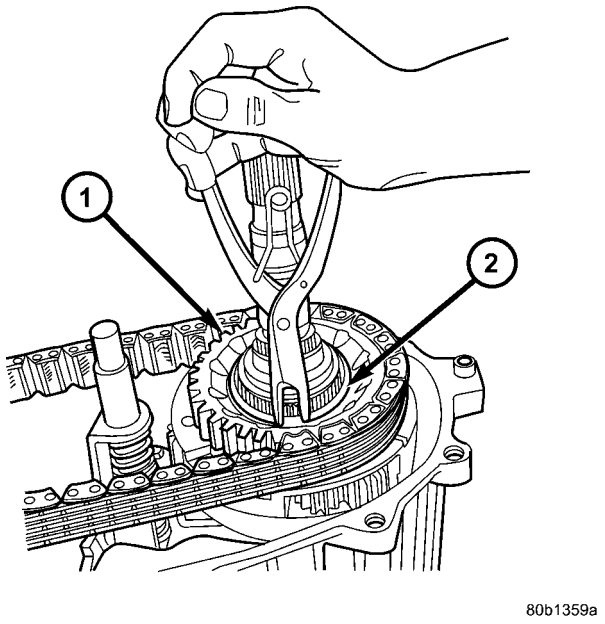

Fig. 20 Drive Sprocket Snap-Ring Removal

1 - DRIVE SPROCKET
2 - DRIVE SPROCKET SNAP-RING

(2) Remove drive sprocket and chain (Fig. 21).
(3) Remove front output shaft (Fig. 22).

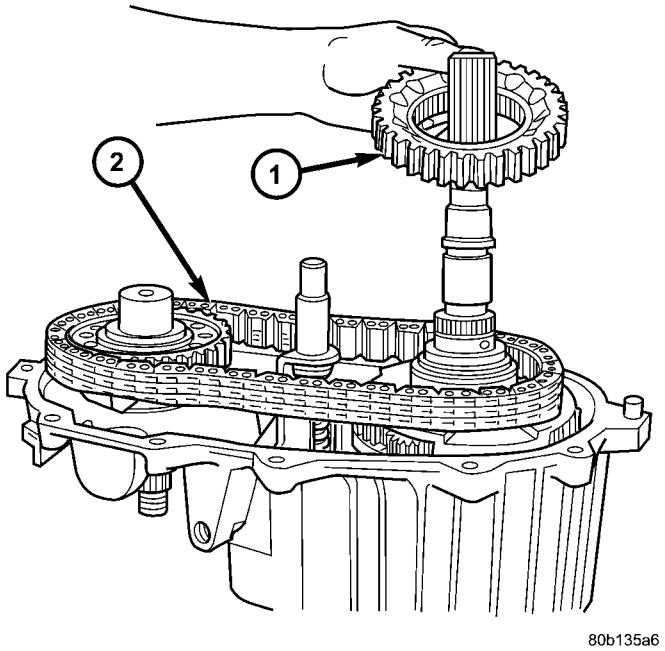

Fig. 21 Drive Sprocket And Chain Removal

1 - DRIVE SPROCKET
2 - DRIVE CHAIN

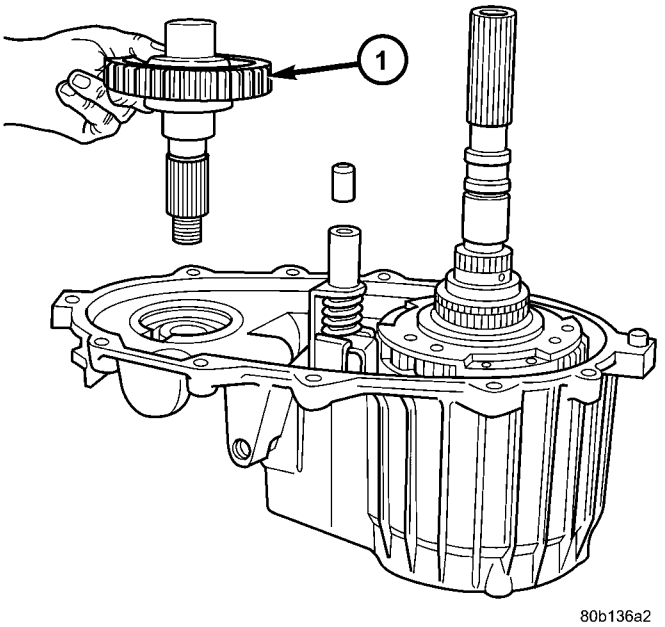

Fig. 22 Removing Front Output Shaft

1 - FRONT OUTPUT SHAFT

TRANSFER CASE - NV242 (Continued)

SHIFT FORKS AND MAINSHAFT

(1) Remove shift detent plug, spring and pin (Fig. 23).

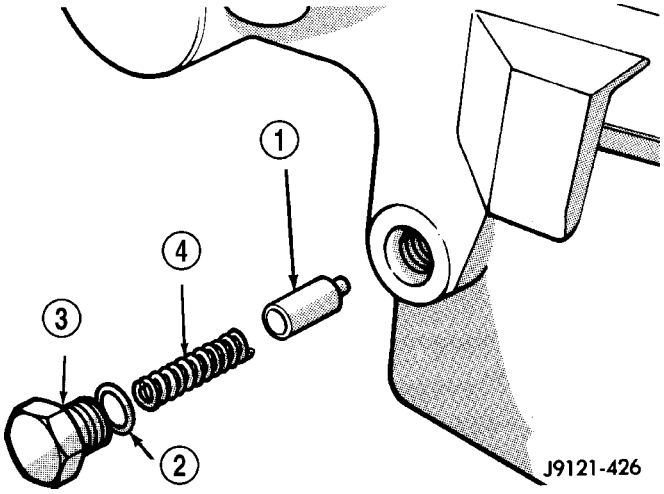

Fig. 23 Detent Component Removal

1 - PLUNGER
2 - O-RING
3 - PLUG
4 - SPRING

(2) Remove seal plug from low range fork lockpin access hole. Then move shift sector to align low range fork lockpin with access hole.

(3) Remove range fork lockpin with size number one easy-out tool as follows:

(a) Insert easy-out tool through access hole in side of transfer case and into lock-pin.

(b) Tap easy-out tool into lock-pin with hammer until tool is securely engaged into the lock-pin.

(c) Install a t-handle, such as from a tap and die set, onto the easy-out tool.

(d) Securely tighten the t-handle onto the tool.

(e) In one motion, pull upward and turn the t-handle counter-clockwise to remove the lock-pin.

(4) Remove shift rail by pulling it straight up and out of fork (Fig. 24).

(5) Remove mode fork and mainshaft as assembly (Fig. 25).

(6) Remove mode shift sleeve and mode fork assembly from mainshaft (Fig. 26). Note position of mode sleeve in fork and remove sleeve.

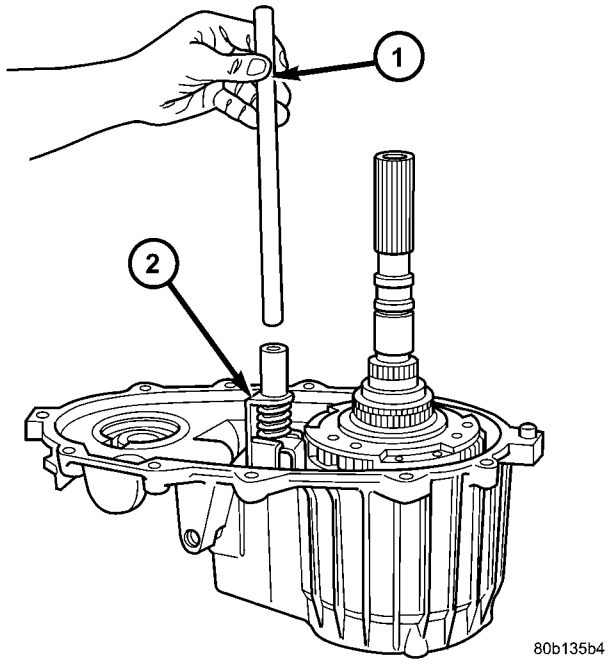

Fig. 24 Shift Rail Removal

1 - SHIFT RAIL
2 - MODE FORK

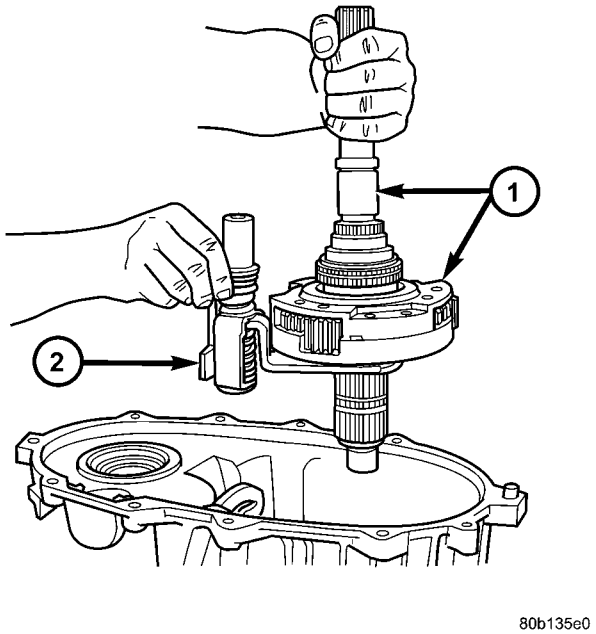

Fig. 25 Mainshaft And Mode Fork Removal

1 - MAINSHAFT ASSEMBLY
2 - MODE FORK

TRANSFER CASE - NV242 (Continued)

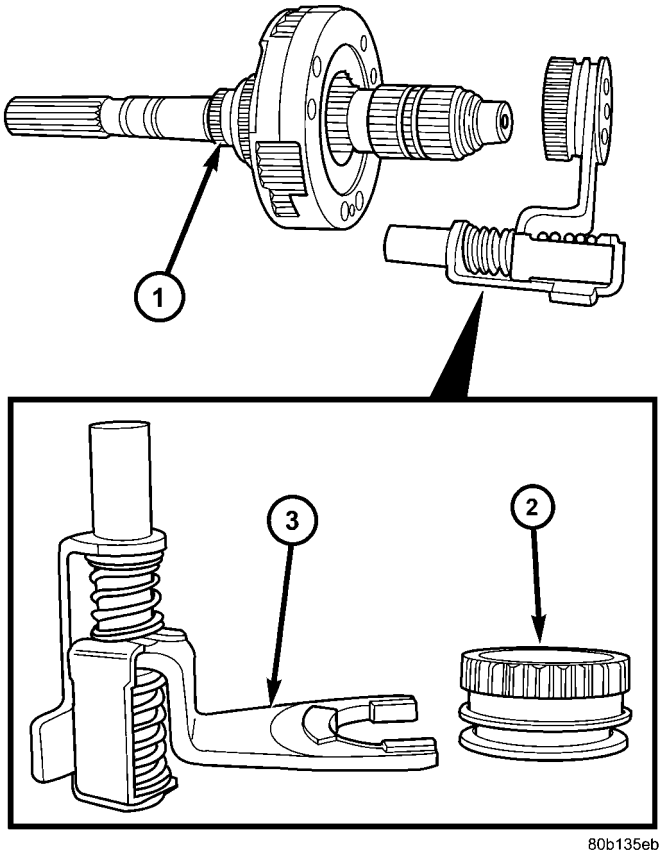

Fig. 26 Separate Mode Fork And Sleeve

1 - MAINSHAFT
2 - MODE SLEEVE
3 - MODE FORK ASSEMBLY

(7) Remove intermediate clutch shaft snap-ring (Fig. 27).

(8) Remove clutch shaft thrust ring (Fig. 28).

(9) Remove intermediate clutch shaft (Fig. 29).

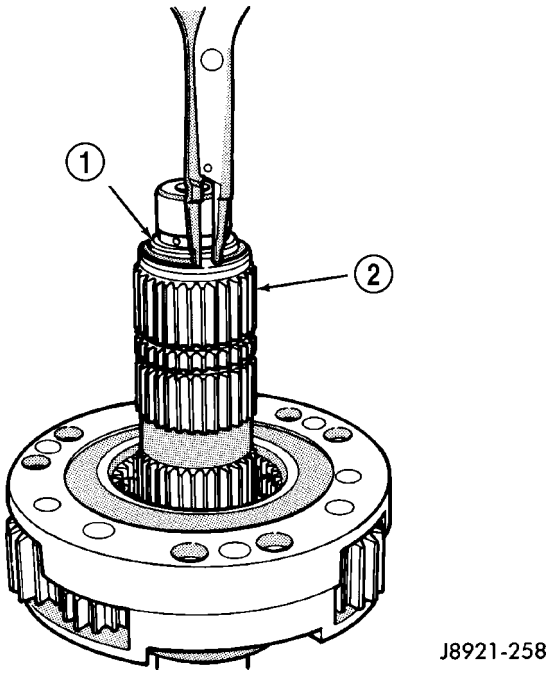

Fig. 27 Intermediate Clutch Shaft Snap-Ring Removal

1 - SNAP-RING
2 - INTERMEDIATE CLUTCH SHAFT

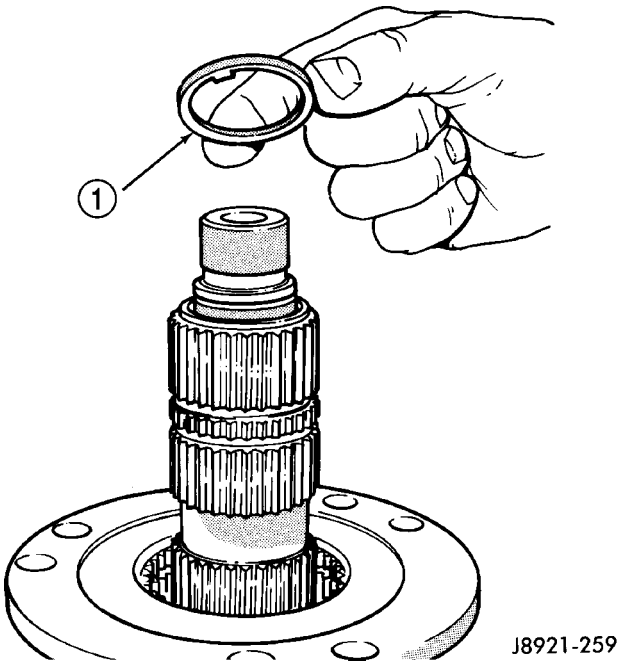

Fig. 28 Clutch Shaft Thrust Ring Removal

1 - CLUTCH SHAFT THRUST RING

TRANSFER CASE - NV242 (Continued)

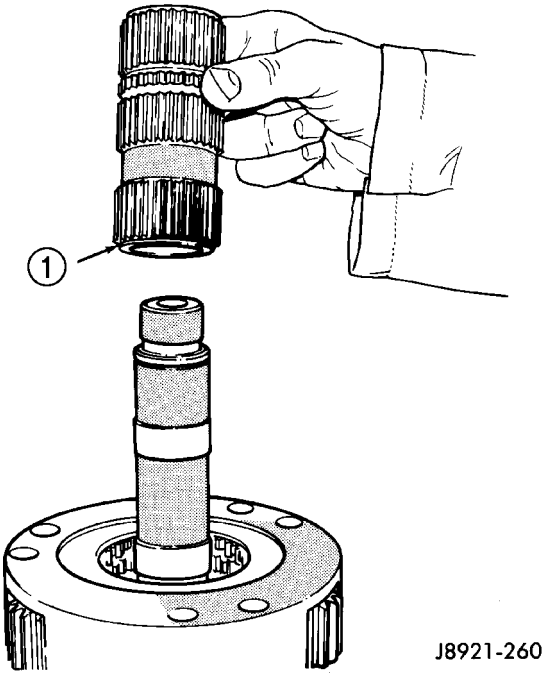

Fig. 29 Intermediate Clutch Shaft Removal

1 - INTERMEDIATE CLUTCH SHAFT

(10) Remove differential snap-ring (Fig. 30).
(11) Remove differential (Fig. 31).
(12) Remove differential needle bearings and both needle bearing thrust washers from mainshaft.

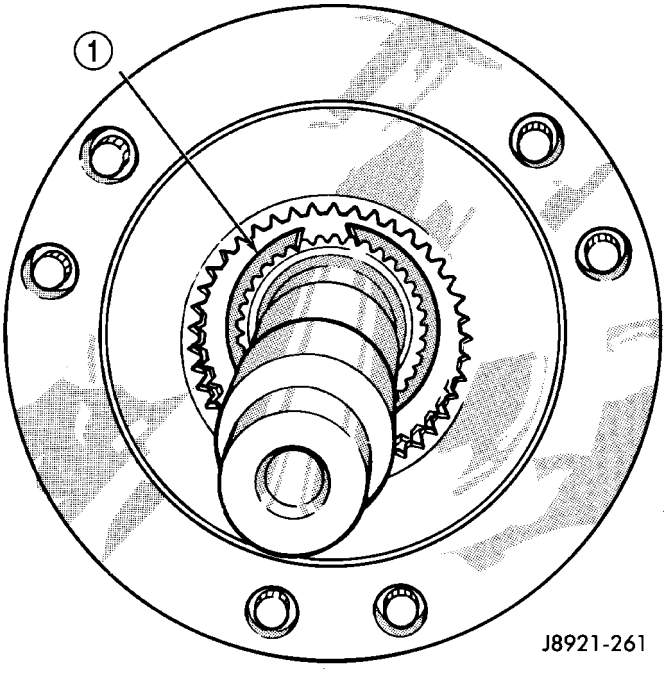

Fig. 30 Differential Snap-Ring Removal

1 - DIFFERENTIAL SNAP-RING

(13) Slide low range fork pin out of shift sector slot.

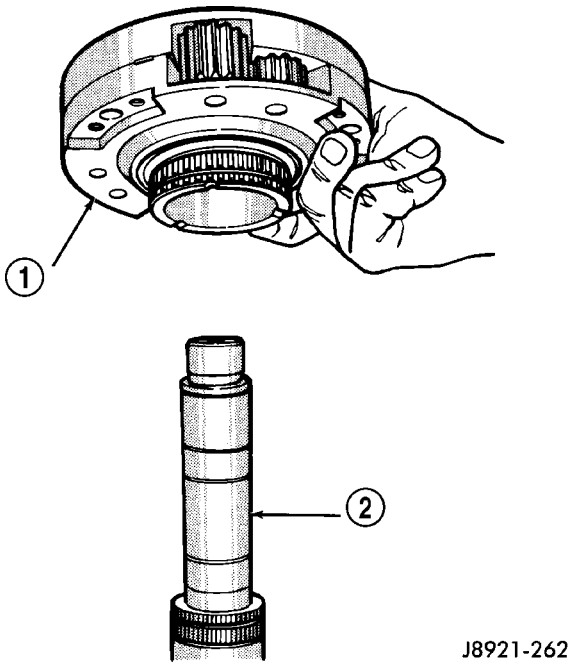

Fig. 31 Differential Removal

1 - DIFFERENTIAL
2 - MAINSHAFT

(14) Remove low range fork and sleeve (Fig. 32).
(15) Remove shift sector.

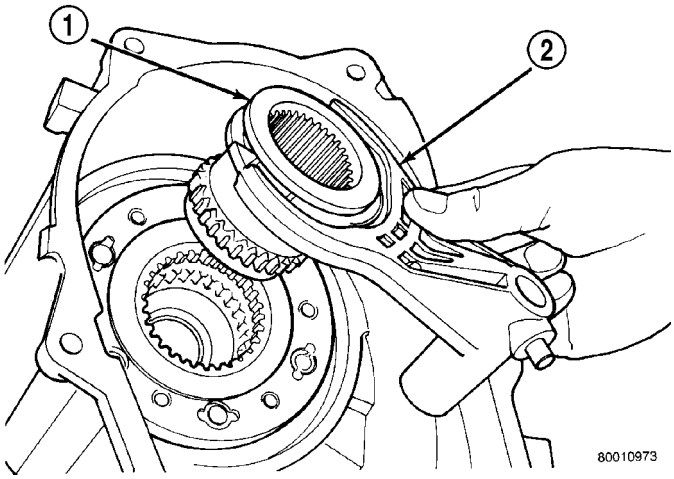

Fig. 32 Range Fork And Sleeve Removal

1 - RANGE HUB
2 - RANGE FORK

TRANSFER CASE - NV242 (Continued)

(16) Remove the shift sector shaft seal (Fig. 33).

(17) Remove the shift sector shaft bearing with an appropriate socket (Fig. 34).

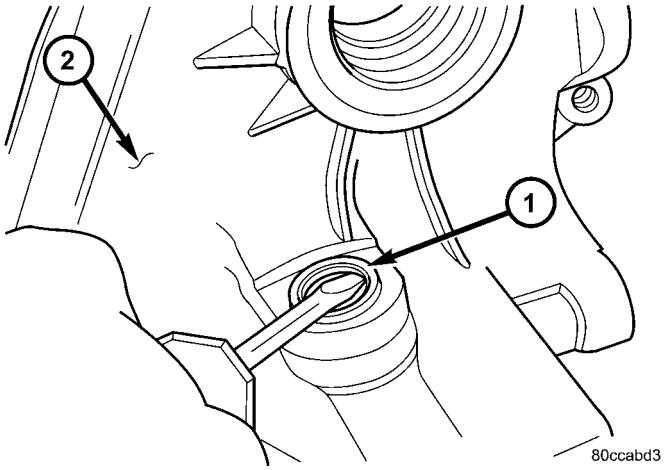

Fig. 33 Remove Shift Shaft Seal

1 - SHIFT SHAFT SEAL
2 - TRANSFER CASE

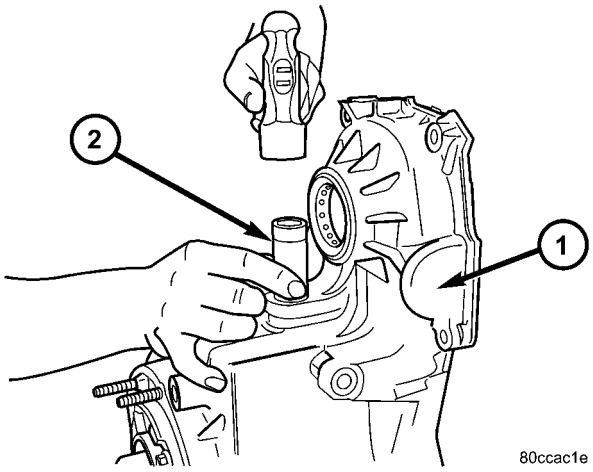

Fig. 34 Remove Shift Sector Shaft Bearing

1 - TRANSFER CASE
2 - SOCKET

INPUT GEAR/LOW RANGE ASSEMBLY

(1) Remove front bearing retainer bolts.

(2) Remove front bearing retainer. Carefully pry retainer loose with screwdriver (Fig. 35). Position screwdriver in slots cast into retainer.

(3) Remove input gear snap-ring (Fig. 36).

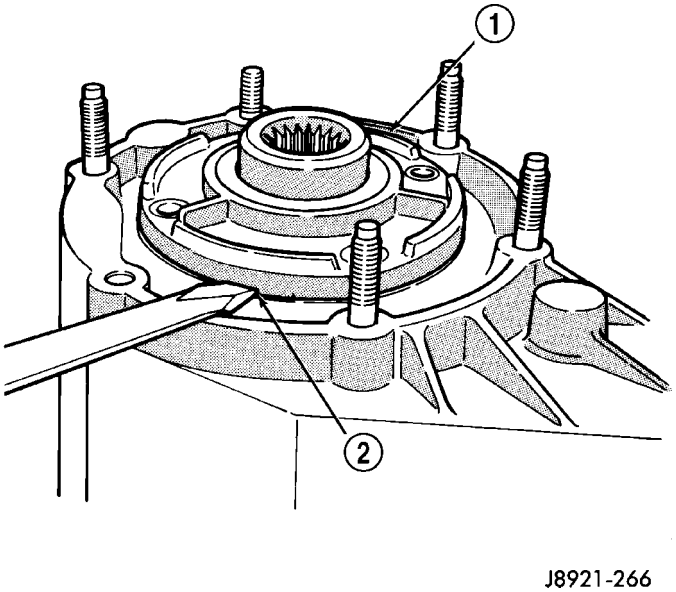

Fig. 35 Front Bearing Retainer Removal

1 - FRONT BEARING RETAINER
2 - RETAINER SLOT

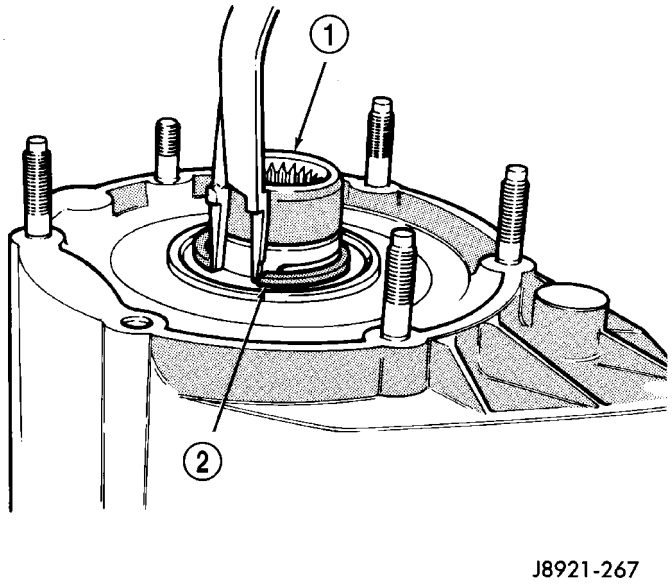

Fig. 36 Input Gear Snap-Ring Removal

1 - INPUT GEAR
2 - SNAP-RING

TRANSFER CASE - NV242 (Continued)

(4) Remove input/low range gear assembly from bearing with Tool Handle C-4171 and Tool 7829-A (Fig. 37).

(5) Remove low range gear snap-ring (Fig. 38).

(6) Remove input gear retainer, thrust washers and input gear from low range gear (Fig. 39).

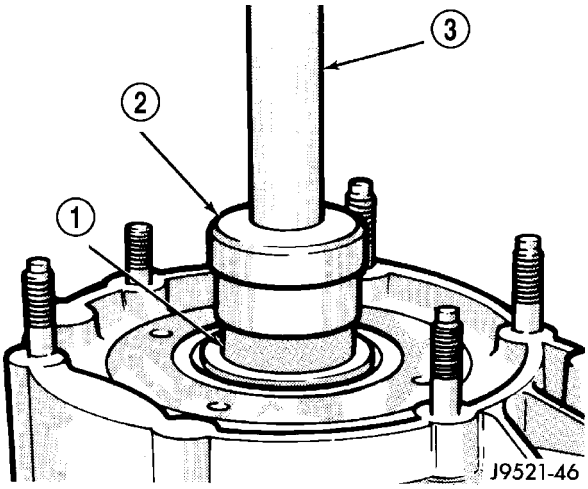

Fig. 37 Input And Low Range Gear Assembly Removal

1 - INPUT-LOW RANGE GEARS
2 - SPECIAL TOOL 7829-A
3 - SPECIAL TOOL C-4171

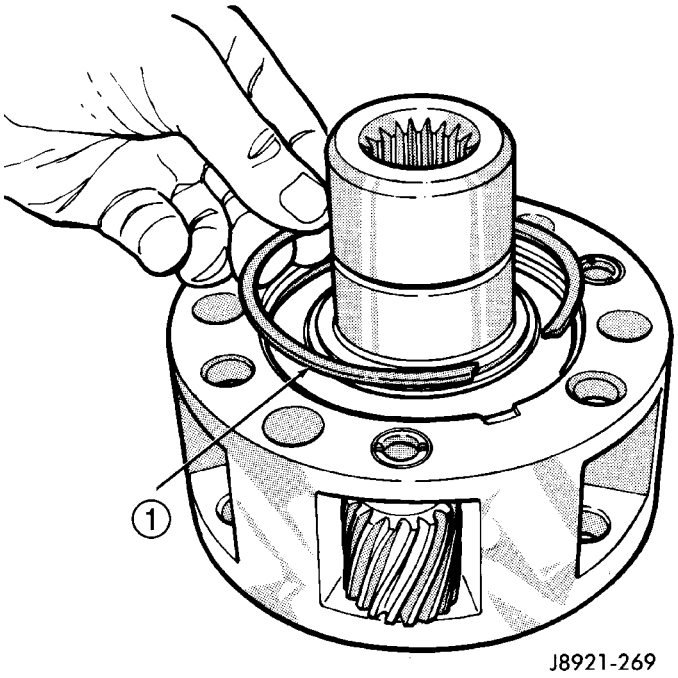

Fig. 38 Low Range Gear Snap-Ring Removal/ Installation

1 - LOW RANGE GEAR SNAP-RING

(7) Inspect low range annulus gear (Fig. 40). The annulus gear is not a serviceable component. If damaged, replace gear and front case as assembly.

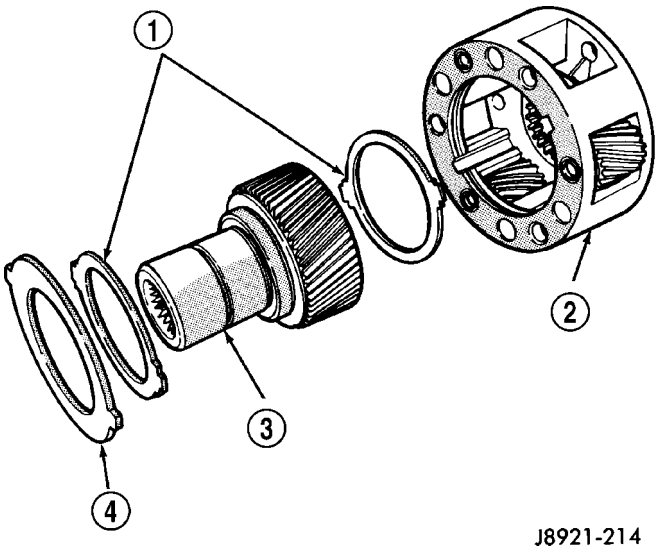

Fig. 39 Low Range Gear Disassembly

1 - THRUST WASHERS
2 - LOW RANGE GEAR
3 - INPUT GEAR
4 - RETAINER

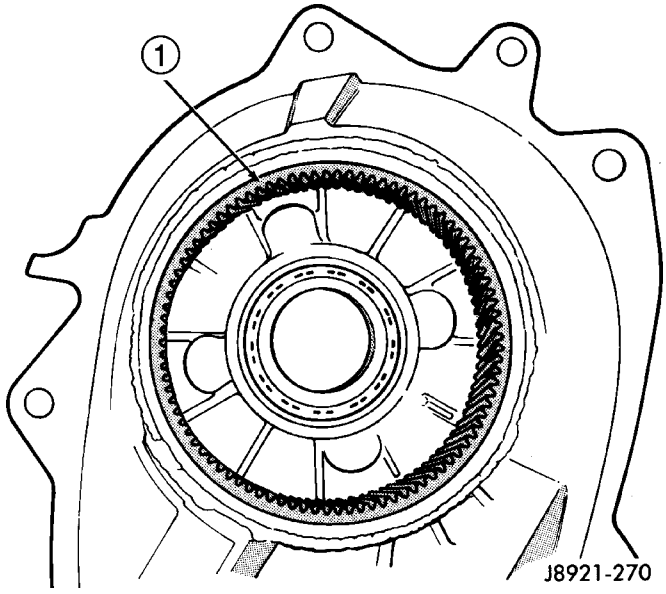

Fig. 40 Inspecting Low Range Annulus Gear

1 - LOW RANGE ANNULUS GEAR

(8) Remove oil seals from following components:

- front bearing retainer.
- rear retainer.
- oil pump.
- case halves.

DIFFERENTIAL

(1) Mark differential case halves for reference.

(2) Remove differential case bolts.

(3) Invert differential on workbench.

TRANSFER CASE - NV242 (Continued)

(4) Separate top case from bottom case. Use slots in case halves to pry them apart (Fig. 41).

(5) Remove thrust washers and planet gears from case pins (Fig. 42).

(6) Remove mainshaft and sprocket gears from bottom case (Fig. 43). Note gear position for reference before separating them.

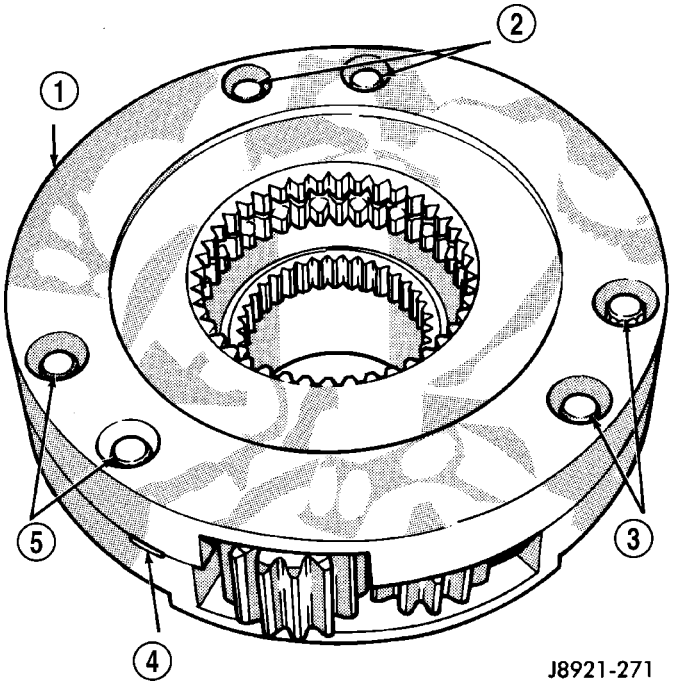

Fig. 41 Separating Differential Case Halves

1 - TOP CASE
2 - CASE BOLTS
3 - CASE BOLTS
4 - CASE SLOTS
5 - CASE BOLTS

CLEANING

Clean the transfer case parts with a standard parts cleaning solvent. Remove all traces of sealer from the cases and retainers with a scraper and all purpose cleaner. Use compressed air to remove solvent residue from oil feed passages in the case halves, retainers, gears, and shafts.

The oil pickup screen can be cleaned with solvent. Shake excess solvent from the screen after cleaning and allow it to air dry. Do not use compressed air.

INSPECTION

MAINSHAFT/SPROCKET/HUB

Inspect the splines on the hub and shaft and the teeth on the sprocket. Minor nicks and scratches can be smoothed with an oilstone. However, replace any part that is damaged.

Check the contact surfaces in the sprocket bore and on the mainshaft. Minor nicks and scratches can be smoothed with 320-400 grit emery cloth but do not try to salvage the shaft if nicks or wear is severe.

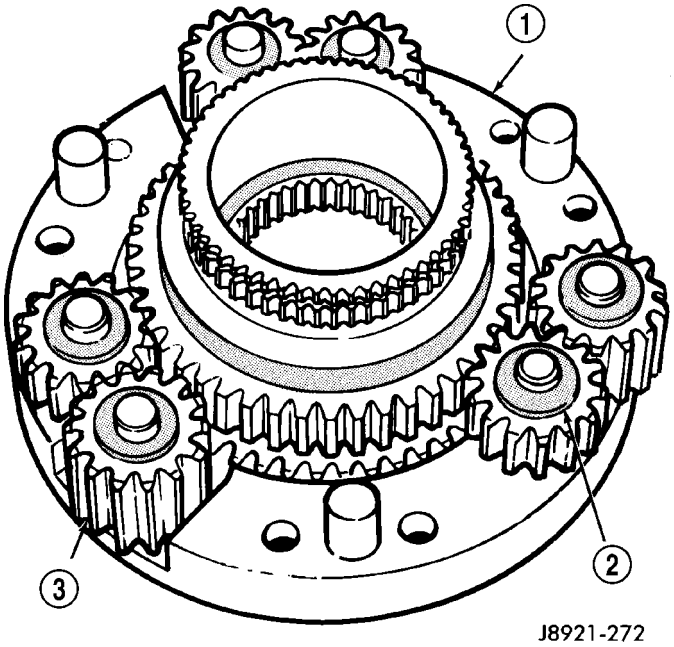

Fig. 42 Planet Gears And Thrust Washer Removal

1 - BOTTOM CASE
2 - THRUST WASHERS (12)
3 - PLANET GEARS (6)

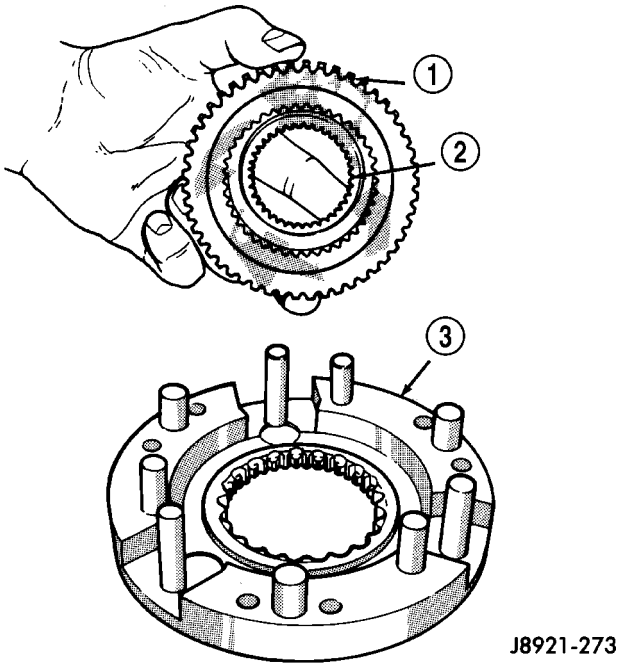

Fig. 43 Mainshaft And Sprocket Gear Removal

1 - MAINSHAFT GEAR
2 - SPROCKET GEAR
3 - BOTTOM CASE

TRANSFER CASE - NV242 (Continued)

INPUT GEAR AND PLANETARY CARRIER

Check the teeth on the gear (Fig. 44). Minor nicks can be dressed off with an oilstone but replace the gear if any teeth are broken, cracked, or chipped. The bearing surface on the gear can be smoothed with 300-400 grit emery cloth if necessary.

Examine the carrier body and pinion gears for wear or damage. The carrier will have to be replaced as an assembly if the body, pinion pins, or pinion gears are damaged.

Check the lock ring and both thrust washers for wear or cracks. Replace them if necessary. Also replace the lock retaining ring if bent, distorted, or broken.

SHIFT FORKS/HUBS/SLEEVES

Check condition of the shift forks and mode fork shift rail (Fig. 45). Minor nicks on the shift rail can be smoothed with 320-400 grit emery cloth.

Inspect the shift fork wear pads. The mode fork pads are serviceable and can be replaced if necessary. The range fork pads are also serviceable.

Check both of the sleeves for wear or damage, especially on the interior teeth. Replace the sleeves if wear or damage is evident.

REAR RETAINER/BEARING/ SEAL/SLINGER/BOOT

Inspect the retainer components (Fig. 46). Replace the bearing if rough or noisy. Check the retainer for cracks or wear in the bearing bore. Clean the retainer sealing surfaces with a scraper and 3M all purpose cleaner. This will ensure proper adhesion of the sealer during reassembly.

Replace the slinger and seal outright; do not reuse either part.

Replace any part if distorted, bent, or broken. Also replace the boot if cut or torn. Replace the boot band clamps, do not reuse them.

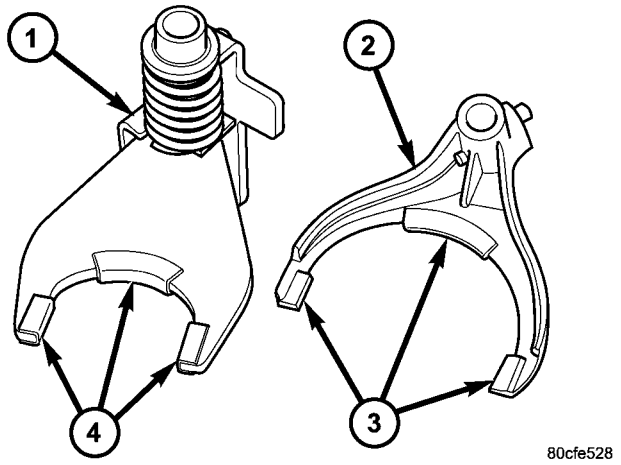

Fig. 45 Shift Fork And Wear Pad Locations

1 - MODE FORK
2 - RANGE FORK
3 - WEAR PADS (SERVICEABLE)
4 - WEAR PADS (SERVICEABLE)

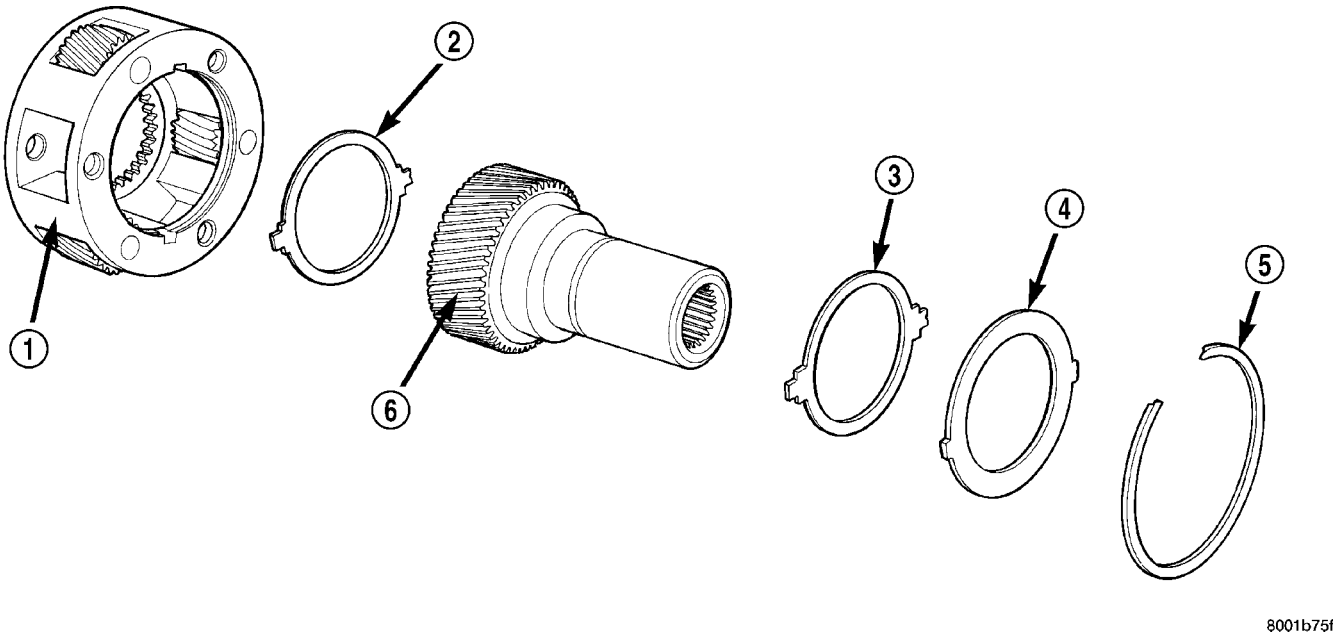

Fig. 44 Input Gear And Carrier Components

1 - PLANETARY CARRIER
2 - REAR THRUST WASHER
3 - FRONT THRUST WASHER
4 - CARRIER LOCK RING
5 - CARRIER LOCK RETAINING RING
6 - INPUT GEAR

TRANSFER CASE - NV242 (Continued)

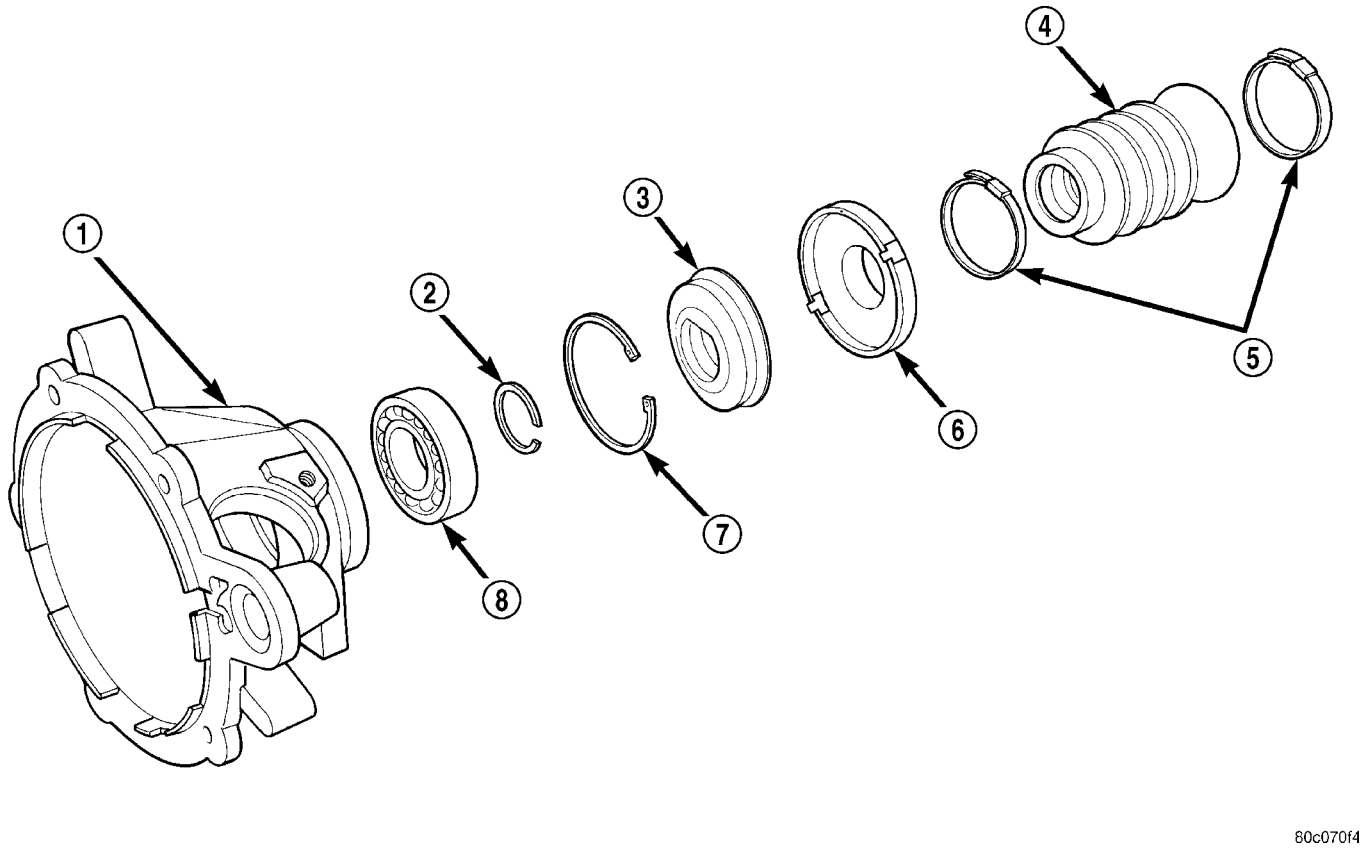

Fig. 46 Rear Retainer - Typical

1 - REAR RETAINER
2 - REAR BEARING I.D. MAINSHAFT RETAINING RING
3 - REAR SEAL
4 - BOOT
5 - BAND CLAMPS
6 - REAR SLINGER
7 - REAR BEARING O.D. RETAINING RING
8 - REAR BEARING

REAR OUTPUT SHAFT/YOKE/DRIVE CHAIN

Check condition of the seal contact surfaces of the yoke slinger (Fig. 47). This surface must be clean and smooth to ensure proper seal life. Replace the yoke nut and seal washer as neither part should be reused.

Inspect the shaft threads, sprocket teeth, and bearing surfaces. Minor nicks on the teeth can be smoothed with an oilstone. Use 320-400 grit emery to smooth minor scratches on the shaft bearing surfaces. Rough threads on the shaft can be chased if necessary. Replace the shaft if the threads are damaged, bearing surfaces are scored, or if any sprocket teeth are cracked or broken.

Examine the drive chain and shaft bearings. Replace the chain and both sprockets if the chain is stretched, distorted, or if any of the links bind. Replace the bearings if rough, or noisy.

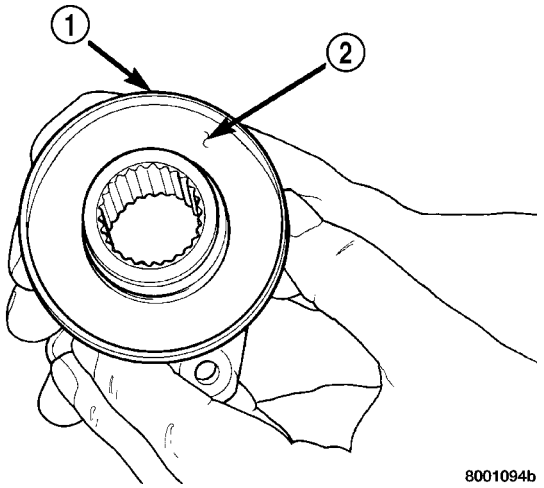

Fig. 47 Seal Contact Surface Of Yoke Slinger

1 - FRONT SLINGER (PART OF YOKE)
2 - SEAL CONTACT SURFACE MUST BE CLEAN AND SMOOTH

TRANSFER CASE - NV242 (Continued)

LOW RANGE ANNULUS GEAR

Inspect annulus gear condition carefully. The gear is only serviced as part of the front case. If the gear is damaged, it will be necessary to replace the gear and front case as an assembly. Do not attempt to remove the gear (Fig. 48)

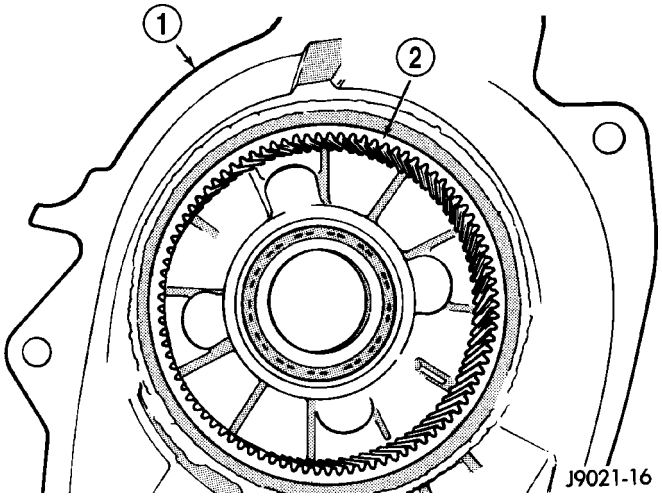

Fig. 48 Low Range Annulus Gear

1 - FRONT CASE
2 - LOW RANGE ANNULUS GEAR

FRONT-REAR CASES AND FRONT RETAINER

Inspect the cases and retainer for wear and damage. Clean the sealing surfaces with a scraper and 3M all purpose cleaner. This will ensure proper sealer adhesion at assembly. Replace the input retainer seal; do not reuse it.

Check case condition. If leaks were a problem, look for gouges and severe scoring of case sealing surfaces. Also make sure the front case mounting studs are in good condition.

Check the front case mounting studs and vent tube. The tube can be secured with Loctite™ 271 or 680 if loose. The stud threads can be cleaned up with a die if necessary. Also check condition of the fill/drain plug threads in the rear case. The threads can be repaired with a thread chaser or tap if necessary. Or the threads can be repaired with Helicoil™ stainless steel inserts if required.

OIL PUMP/OIL PICKUP

Examine the oil pump pickup parts. Replace the pump if any part appears to be worn or damaged. Do not disassemble the pump as individual parts are not available. The pump is only available as a complete assembly. The pickup screen, hose, and tube are the only serviceable parts and are available separately.

ASSEMBLY

Lubricate transfer case components with automatic transmission fluid or petroleum jelly (where indicated) during assembly.

CAUTION: The bearing bores in various transfer case components contain oil feed holes. Make sure replacement bearings do not block the holes.

BEARINGS AND SEALS

(1) Remove snap-ring that retains front output shaft front bearing in case (Fig. 49). Then remove bearing. Use hammer handle, or hammer and brass punch to tap bearing out of case.

(2) Install new front output shaft front bearing with Tool Handle C-4171 and Installer 8033-A with the tapered cone upward (Fig. 50).

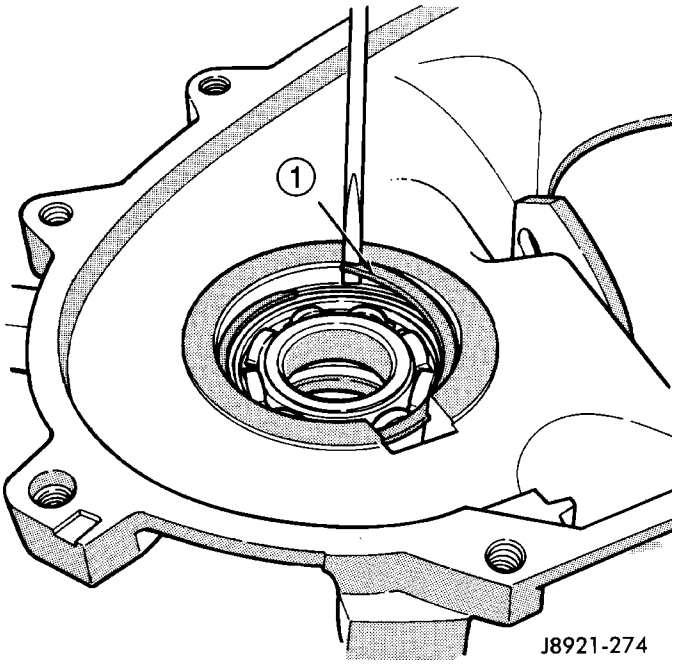

Fig. 49 Front Output Shaft Front Bearing Snap-Ring Removal

1 - FRONT BEARING SNAP RING

(3) Install front bearing snap-ring (Fig. 49).

(4) Remove front output shaft seal using an appropriate pry tool (Fig. 51) or slide-hammer mounted screw.

(5) Install new front output shaft oil seal with Installer 6952-A (Fig. 52).

TRANSFER CASE - NV242 (Continued)

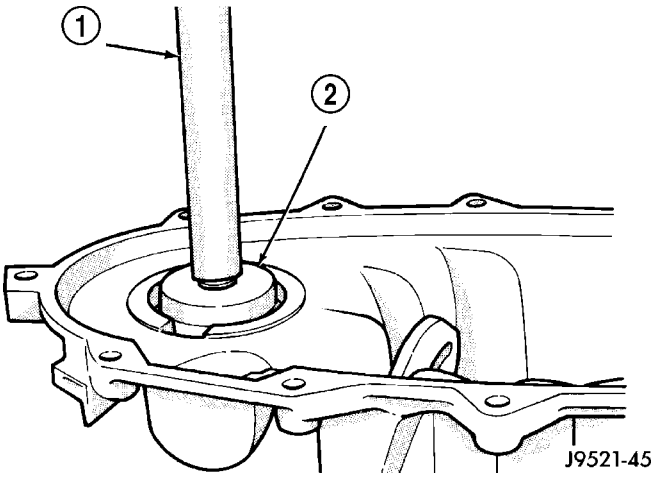

Fig. 50 Front Output Shaft Front Bearing Installation

1 - SPECIAL TOOL C-4171
2 - SPECIAL TOOL 8033A

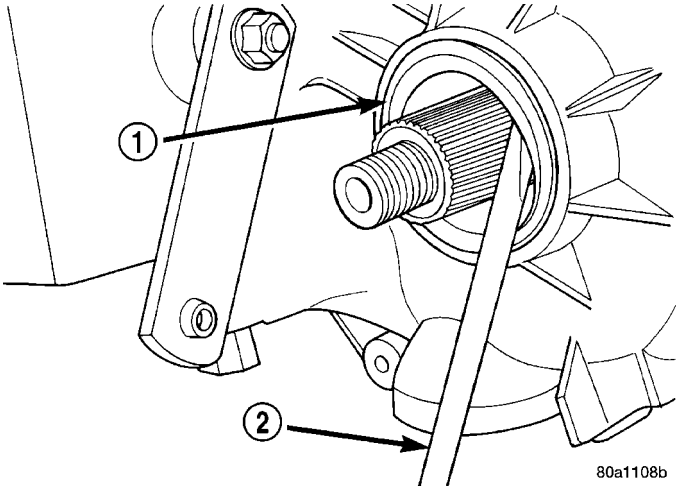

Fig. 51 Remove Front Output Shaft Seal - Typical

1 - OUTPUT SHAFT SEAL
2 - PRYBAR

(6) Remove input gear bearing with Tool Handle C-4171 and Remover C-42

10 (Fig. 53).

(7) Install snap-ring on new input gear bearing.

(8) Install new input gear bearing with Tool Handle C-4171 and Remover C-4210. Install bearing far enough to seat snap-ring against case (Fig. 54).

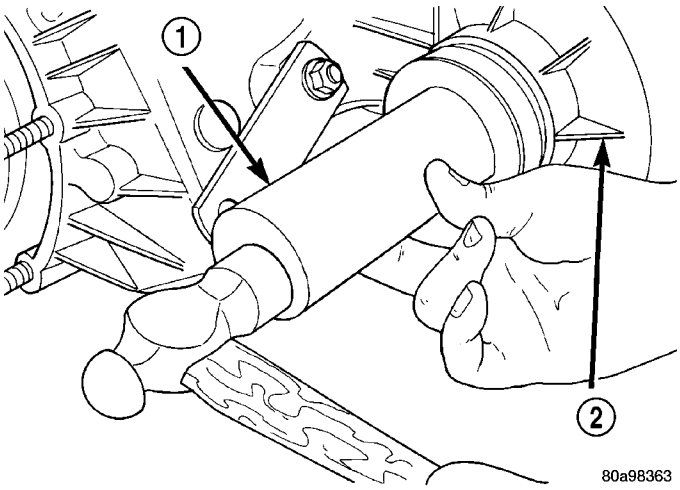

Fig. 52 Install Front Output Shaft Seal - Typical

1 - INSTALLER 6952-A
2 - TRANSFER CASE

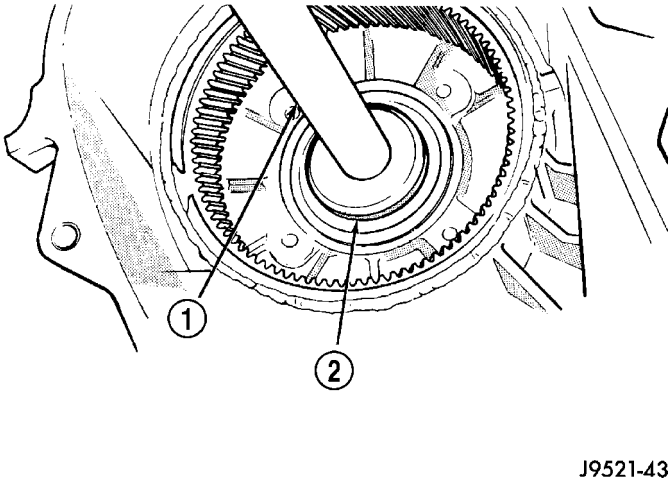

Fig. 53 Input Gear Bearing Removal

1 - SPECIAL TOOL C-4171
2 - SPECIAL TOOL C-4210

TRANSFER CASE - NV242 (Continued)

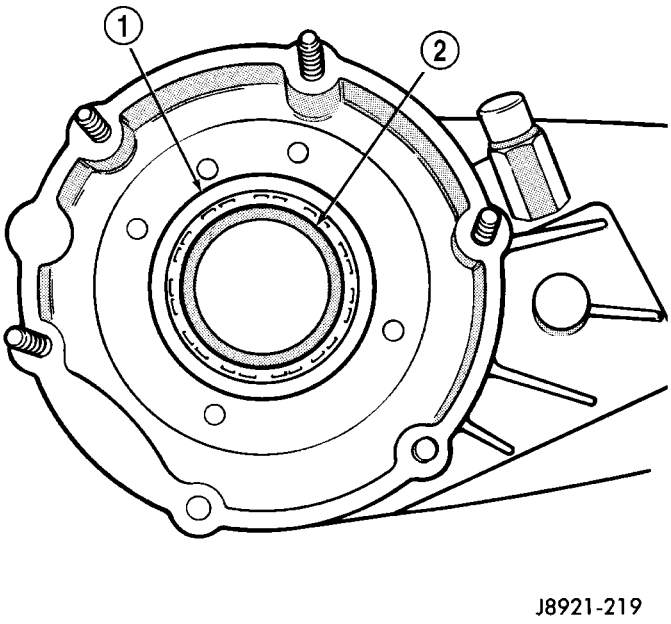

Fig. 54 Seating Input Gear Bearing

1 - SNAP-RING
2 - INPUT SHAFT BEARING

(9) Remove the input gear pilot bearing by inserting a suitably sized drift into the splined end of the input gear and driving the bearing out with the drift and a hammer (Fig. 55).

(10) Install new pilot bearing with Installer 8128 and Handle C-4171 (Fig. 56).

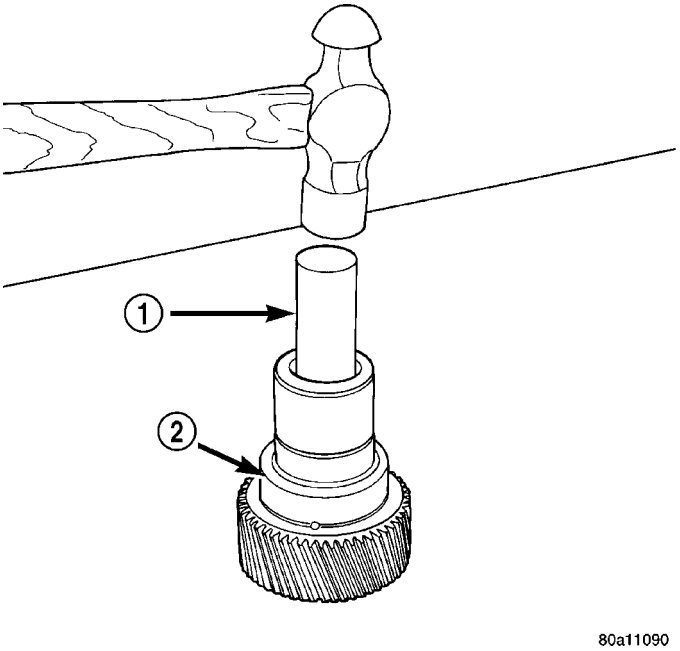

Fig. 55 Remove Input Gear Pilot Bearing

1 - DRIFT
2 - INPUT GEAR

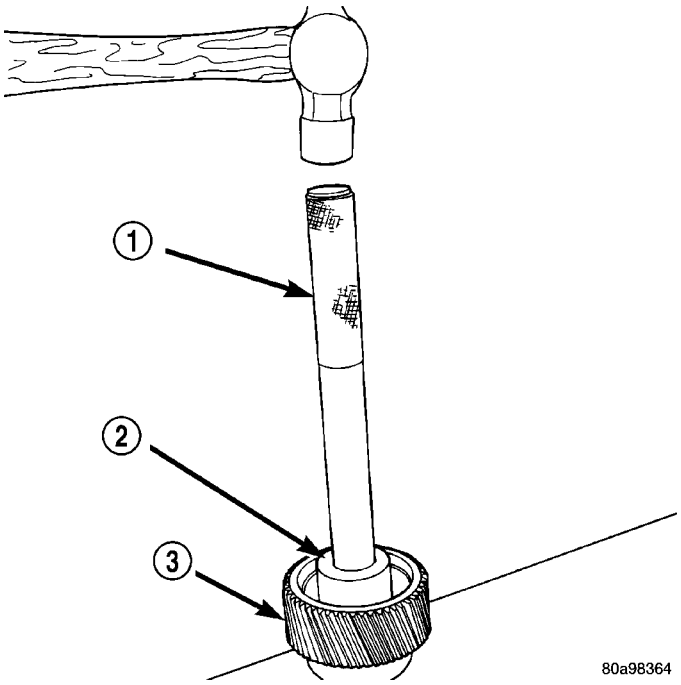

Fig. 56 Install Input Gear Pilot Bearing

1 - HANDLE C-4171
2 - INSTALLER 8128
3 - INPUT GEAR

(11) Install new seal in front bearing retainer with Installer 7884 (Fig. 57).

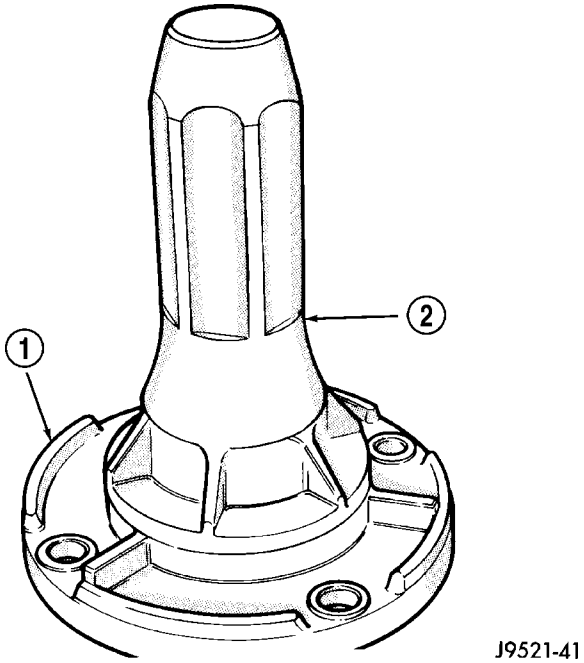

Fig. 57 Front Bearing Retainer Seal Installation

1 - FRONT BEARING RETAINER
2 - SPECIAL TOOL 7884

TRANSFER CASE - NV242 (Continued)

(12) Remove output shaft rear bearing with the screw and jaws from Remover L-4454 and Cup 8148 (Fig. 58).

(13) Install new bearing with Tool Handle C-4171 and Installer 5066 (Fig. 59). Lubricate bearing after installation.

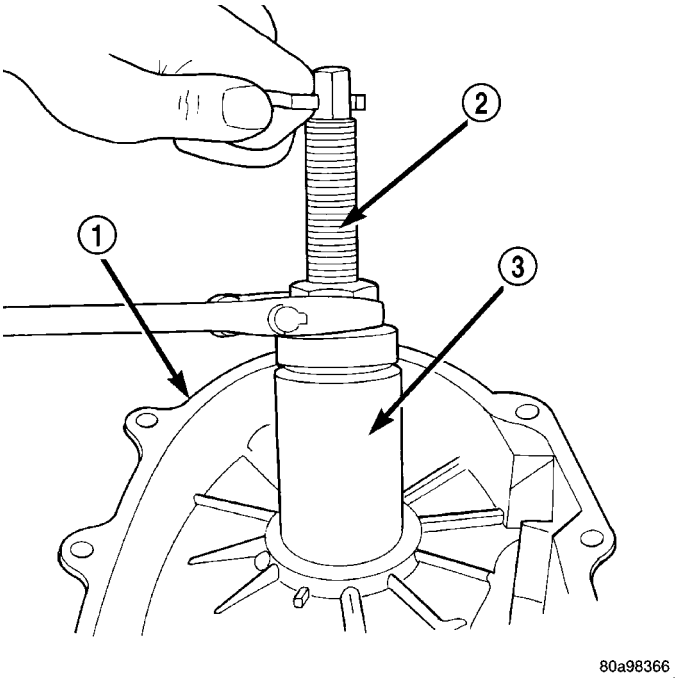

Fig. 58 Remove Front Output Shaft Rear Bearing

1 - REAR CASE
2 - SPECIAL TOOL L-4454-1 AND L-4454-3
3 - SPECIAL TOOL 8148

(14) Install new seal in oil pump feed housing with Special Tool 7888 (Fig. 60).

(15) Install new pickup tube O-ring in oil pump (Fig. 61).

DIFFERENTIAL

(1) Lubricate differential components with automatic transmission fluid.

(2) Install sprocket gear in differential bottom case (Fig. 62).

(3) Install differential planet gears and new thrust washers (Fig. 63). Be sure thrust washers are installed at top and bottom of each planet gear.

(4) Install differential mainshaft gear (Fig. 63).

(5) Align and position differential top case on bottom case (Fig. 64). Align using scribe marks made at disassembly.

(6) While holding differential case halves together, invert the differential and start the differential case bolts.

(7) Tighten differential case bolts to specified torque.

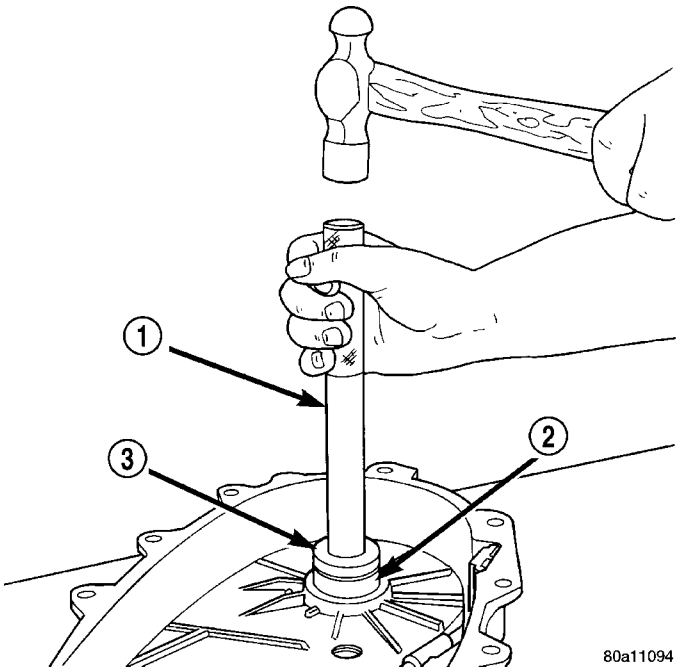

Fig. 59 Install Front Output Shaft Rear Bearing

1 - HANDLE C-4171
2 - OUTPUT SHAFT INNER BEARING
3 - INSTALLER 5066

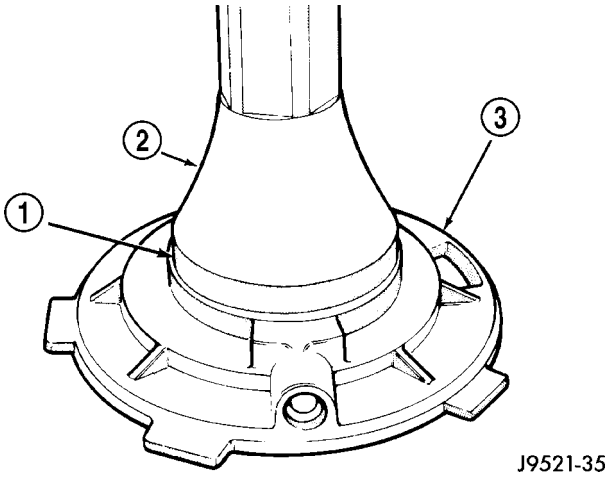

Fig. 60 Oil Pump Seal Installation

1 - HOUSING SEAL
2 - SPECIAL TOOL 7888
3 - OIL PUMP FEED HOUSING

TRANSFER CASE - NV242 (Continued)

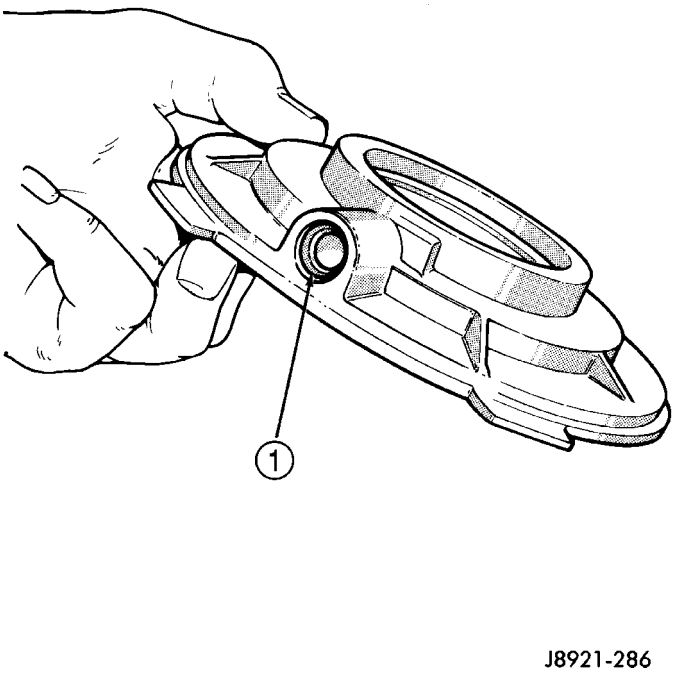

Fig. 61 Pickup Tube O-Ring Installation

1 - PICKUP TUBE O-RING

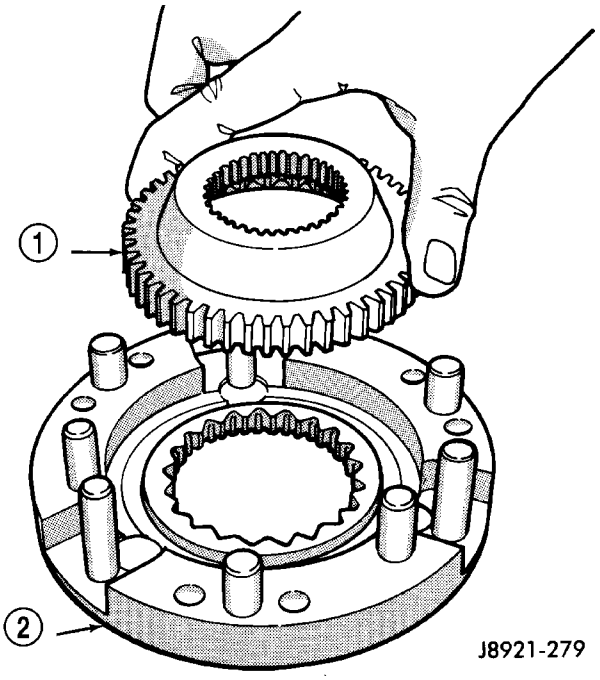

Fig. 62 Installing Differential Sprocket Gear

1 - SPROCKET GEAR
2 - BOTTOM CASE

INPUT GEAR/LOW RANGE ASSEMBLY

(1) Assemble low range gear, input gear thrust washers, input gear and input gear retainer (Fig. 65).

(2) Install low range gear snap-ring (Fig. 66).

(3) Lubricate input gear and low range gears with automatic transmission fluid.

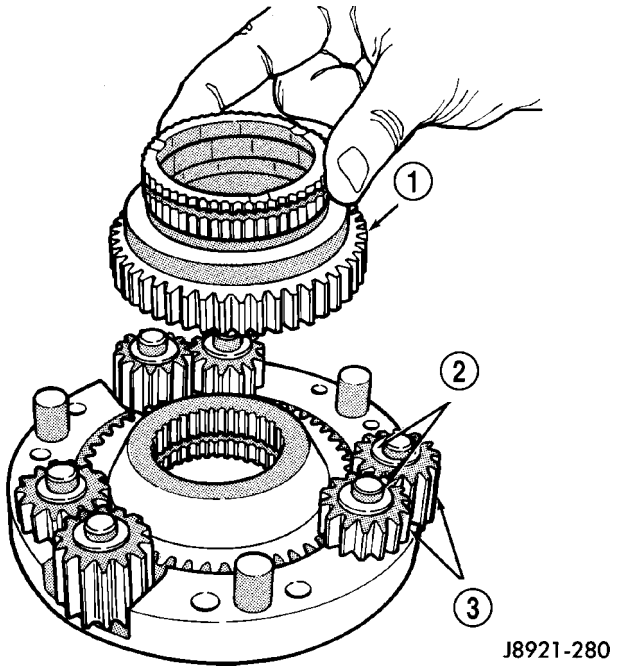

Fig. 63 Installing Mainshaft And Planet Gears

1 - MAINSHAFT GEAR
2 - THRUST WASHERS (12)
3 - PLANET GEARS (6)

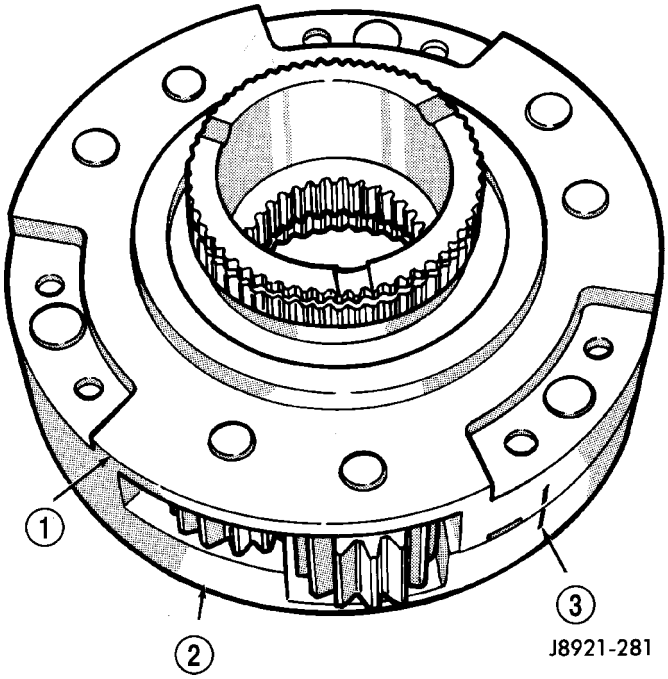

Fig. 64 Differential Case Assembly

1 - TOP CASE
2 - BOTTOM CASE
3 - CASE ALIGNMENT MARKS

(4) Start input gear shaft into front case bearing.

(5) Press input gear shaft into front bearing.

(6) Install new input gear snap ring (Fig. 67).

TRANSFER CASE - NV242 (Continued)

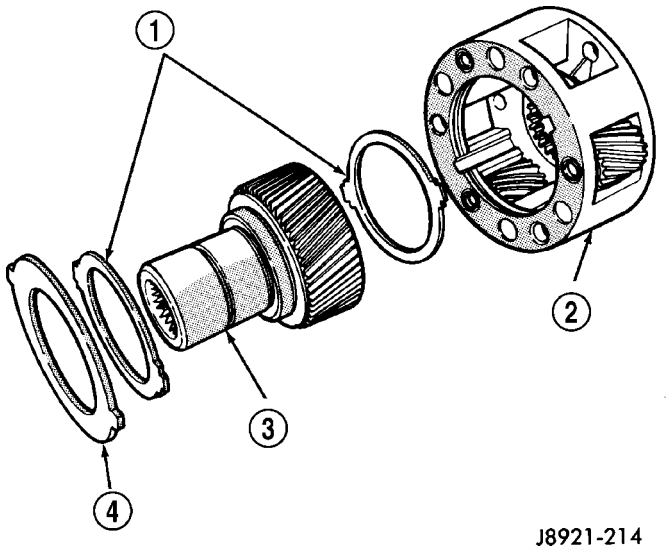

Fig. 65 Low Range And Input Gear Assembly

1 - THRUST WASHERS
2 - LOW RANGE GEAR
3 - INPUT GEAR
4 - RETAINER

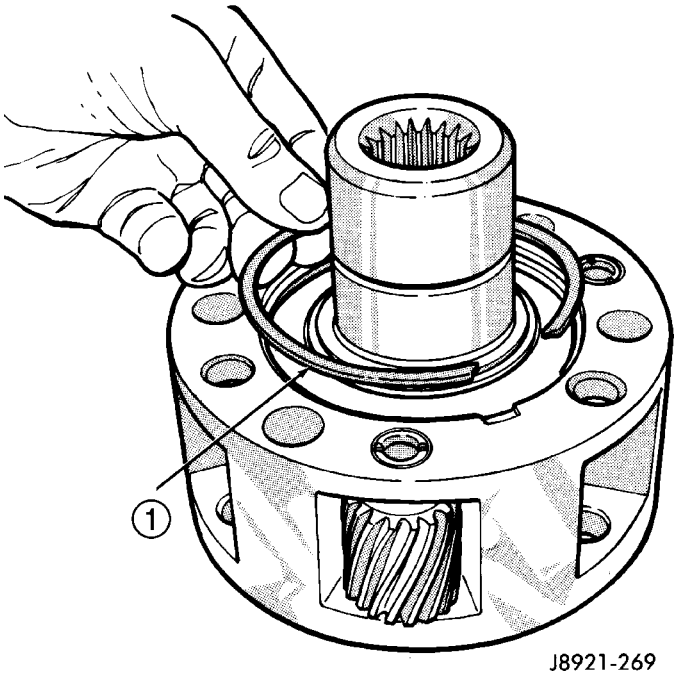

Fig. 66 Install Low Range Gear Snap-Ring

1 - LOW RANGE GEAR SNAP-RING

(7) Apply 3 mm (1/8 in.) wide bead of Mopar® gasket maker or silicone adhesive sealer to seal surface of front bearing retainer.

(8) Install front bearing retainer (Fig. 68). Tighten retainer bolts to 16 ft. lbs. (21 N·m) torque.

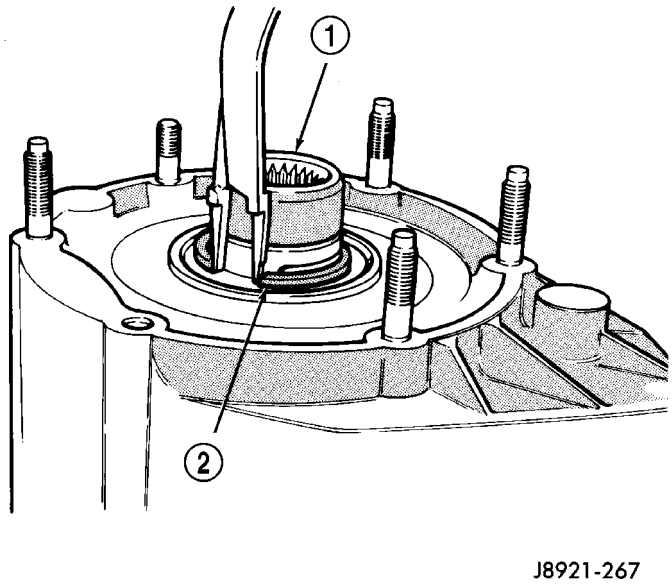

Fig. 67 Input Gear Snap-Ring Installation

1 - INPUT GEAR
2 - SNAP-RING

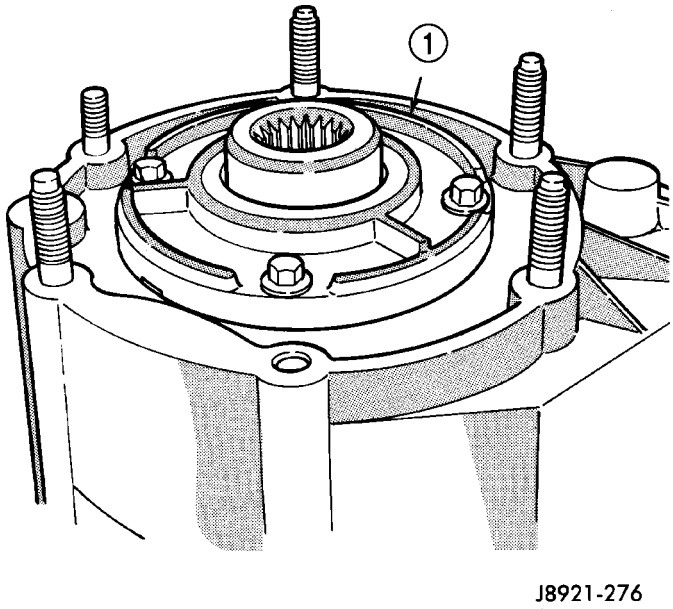

Fig. 68 Installing Front Bearing Retainer

1 - FRONT BEARING RETAINER

TRANSFER CASE - NV242 (Continued)

SHIFT FORKS, SECTOR, AND MAINSHAFT

(1) Install the shift sector shaft bearing using a suitable socket until the bearing is flush to the bottom, inner edge of the bore (Fig. 69).

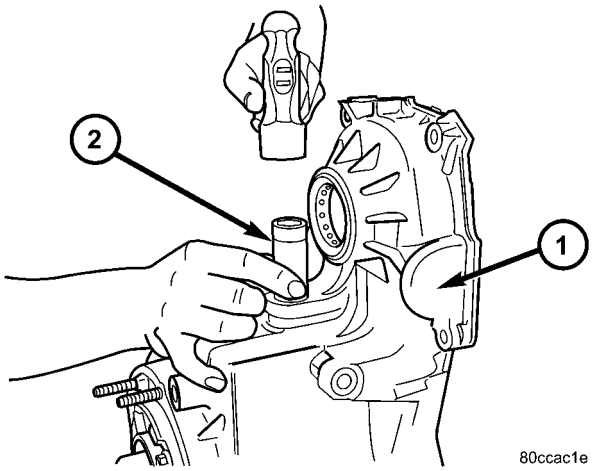

Fig. 69 Install Shift Sector Shaft Bearing

1 - TRANSFER CASE
2 - SOCKET

(2) Install a new shift sector shaft seal using a suitable socket until the seal is flush to the bottom of the bore lead-in chamfer.

(3) Install shift sector.

(4) Install new pads on low range fork, if necessary.

(5) Assemble low range fork and sleeve.

(6) Position low range fork and sleeve in case. Be sure low range fork pin is engaged in shift sector slot (Fig. 70).

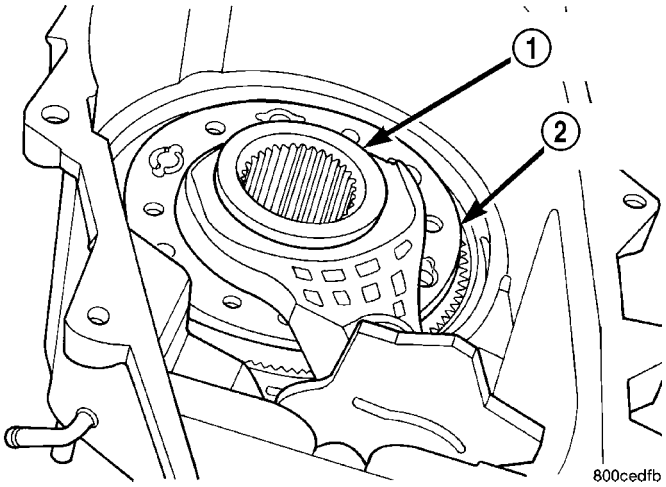

Fig. 70 Install Range Fork And Sleeve Assembly

1 - RANGE SLEEVE
2 - RANGE FORK

(7) Install first mainshaft bearing spacer on mainshaft (Fig. 71).

(8) Install bearing rollers on mainshaft (Fig. 71). Coat bearing rollers with generous quantity of petroleum jelly to hold them in place.

(9) Install remaining bearing spacer on mainshaft (Fig. 71). Do not displace any bearings while installing spacer.

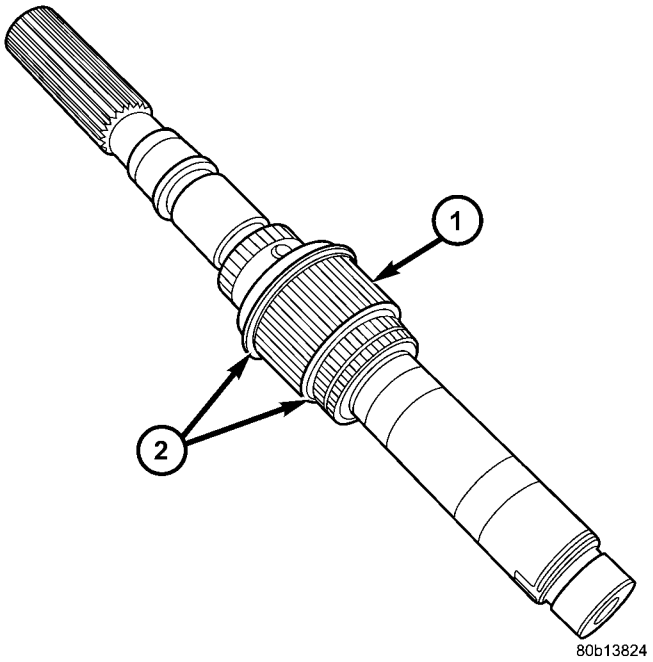

Fig. 71 Installing Mainshaft Bearing Rollers and Spacers

1 - MAINSHAFT BEARING ROLLERS
2 - BEARING SPACERS

(10) Install differential (Fig. 72). Do not displace mainshaft bearings when installing differential.

(11) Install differential snap-ring (Fig. 73).

(12) Install intermediate clutch shaft (Fig. 74).

TRANSFER CASE - NV242 (Continued)

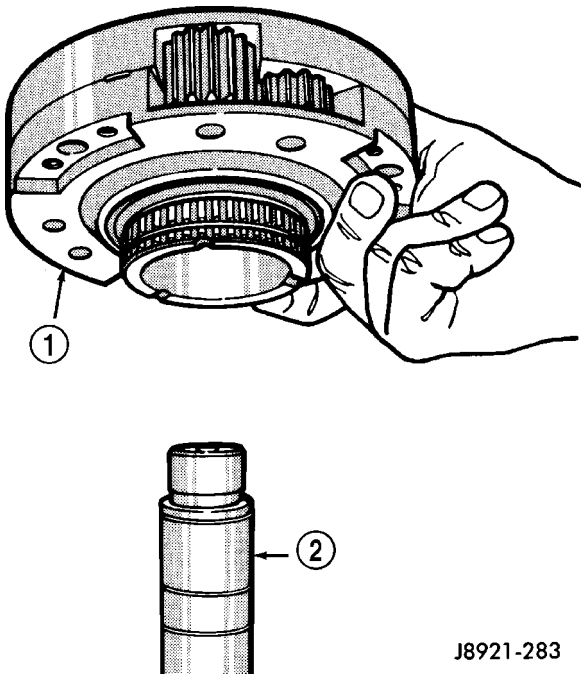

Fig. 72 Differential Installation

1 - DIFFERENTIAL
2 - MAINSHAFT

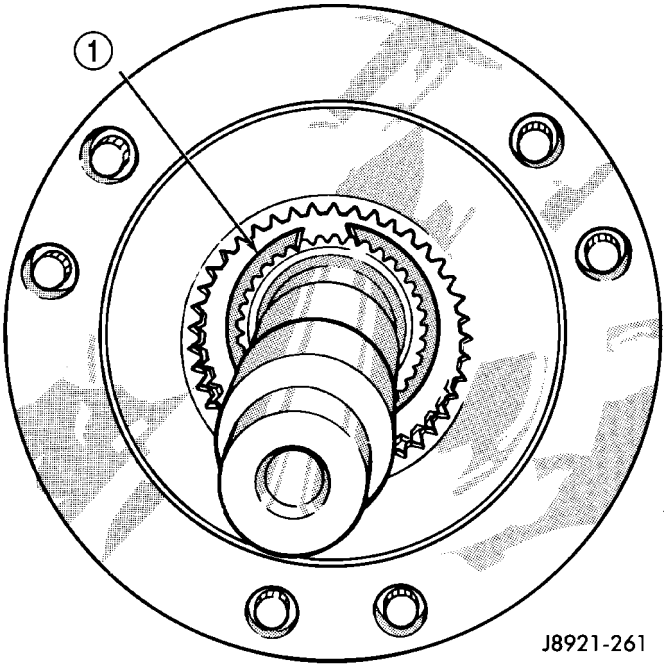

Fig. 73 Installing Differential Snap-Ring

1 - DIFFERENTIAL SNAP-RING

(13) Install clutch shaft thrust washer (Fig. 75).

(14) Install clutch shaft snap-ring (Fig. 76).

(15) Inspect mode fork assembly (Fig. 77). Replace pads and bushing if necessary. Replace fork tube if bushings inside tube are worn or damaged. Also check springs and slider bracket (Fig. 77). Replace worn, damaged components.

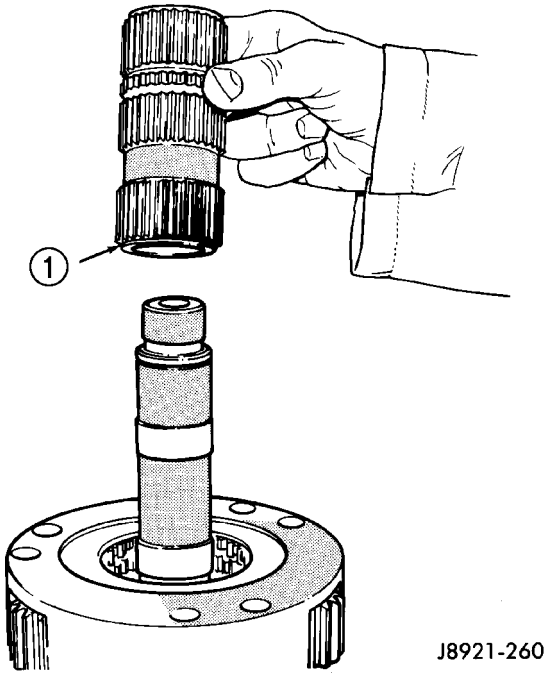

Fig. 74 Installing Intermediate Clutch Shaft

1 - INTERMEDIATE CLUTCH SHAFT

Fig. 75 Installing Clutch Shaft Thrust Washer

1 - CLUTCH SHAFT THRUST RING

TRANSFER CASE - NV242 (Continued)

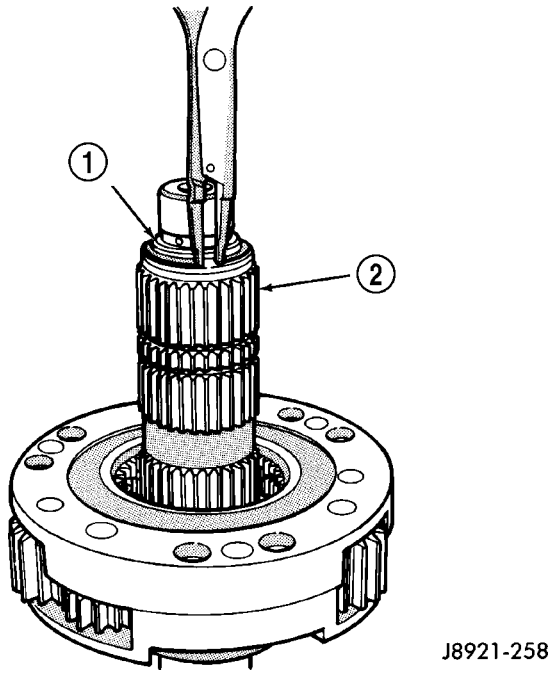

Fig. 76 Installing Clutch Shaft Snap-Ring

1 - SNAP-RING
2 - INTERMEDIATE CLUTCH SHAFT

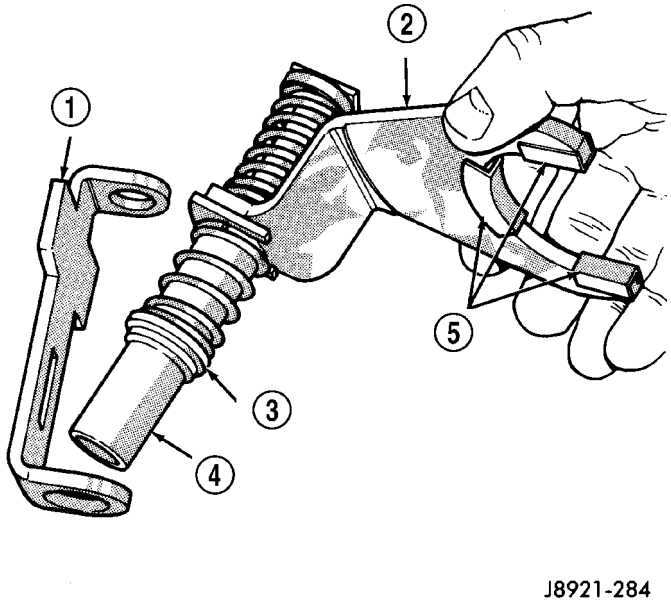

Fig. 77 Mode Fork Assembly Inspection

1 - SLIDER
2 - MODE FORK
3 - BUSHING/SPRING
4 - TUBE
5 - PADS

(16) Install mode sleeve in mode fork (Fig. 78). Then install assembled sleeve and fork on mainshaft. Be sure mode sleeve splines are engaged in differential splines.

(17) Install mode fork and mainshaft assembly in case (Fig. 79). Rotate mainshaft slightly to engage shaft with low range gears.

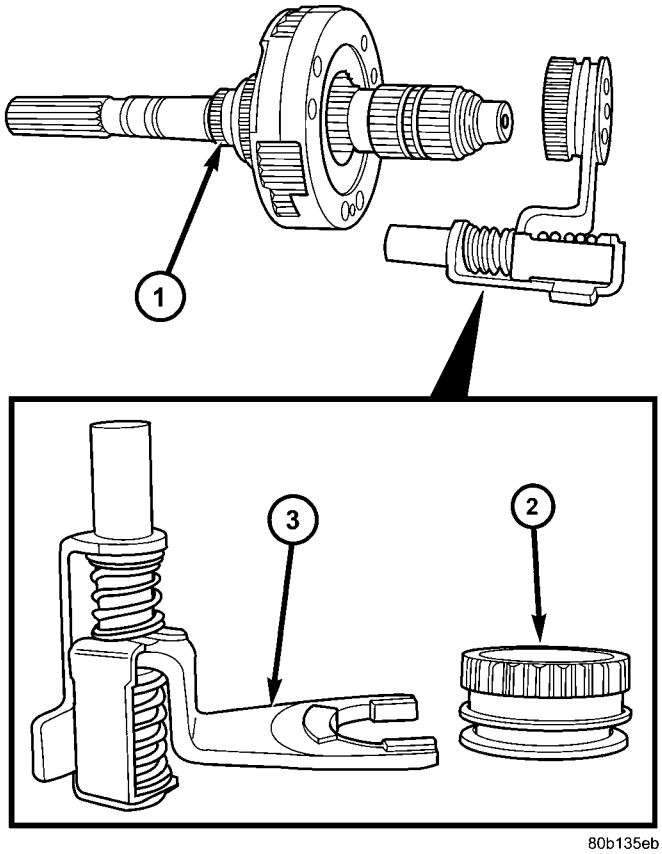

Fig. 78 Installing Mode Fork And Sleeve

1 - MAINSHAFT
2 - MODE SLEEVE
3 - MODE FORK ASSEMBLY

(18) Rotate mode fork pin into shift sector slot.

(19) Install shift rail (Fig. 80). Be sure rail is seated in both shift forks.

(20) Rotate shift sector to align lockpin hole in low range fork with access hole in case.

TRANSFER CASE - NV242 (Continued)

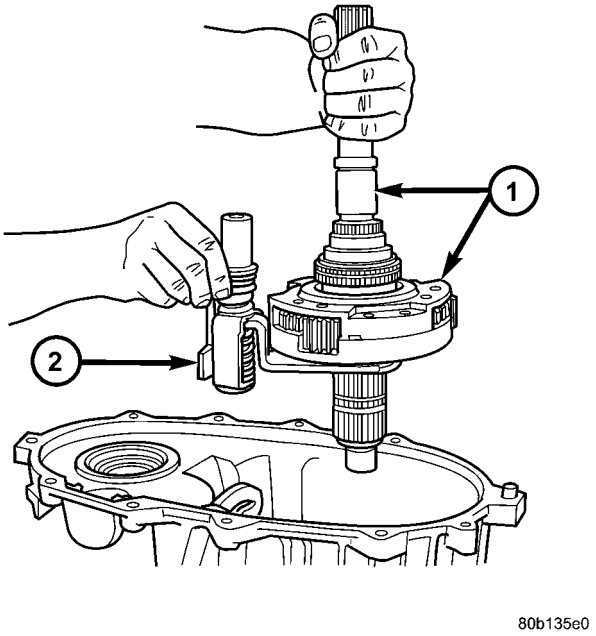

Fig. 79 Assembled Mainshaft And Mode Fork Installation

1 - MAINSHAFT ASSEMBLY
2 - MODE FORK

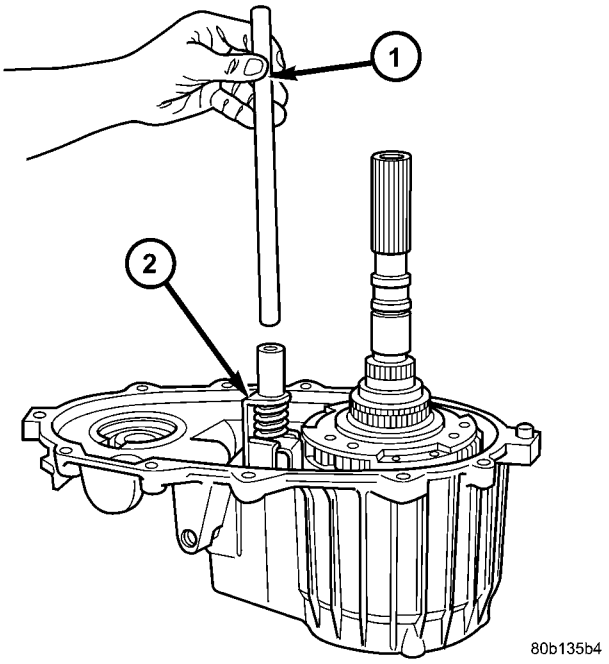

Fig. 80 Shift Rail Installation

1 - SHIFT RAIL
2 - MODE FORK

(21) Insert an easy-out in range fork lockpin to hold it securely for installation (Fig. 81). Lockpin is slightly tapered on one end. Insert tapered end into fork and rail.

(22) Insert lockpin through access hole and into shift fork (Fig. 81). Then remove easy-out and seat the pin with pin punch.

(23) Install plug in lockpin access hole.

(24) Install detent plunger, detent spring and detent plug in case (Fig. 82).

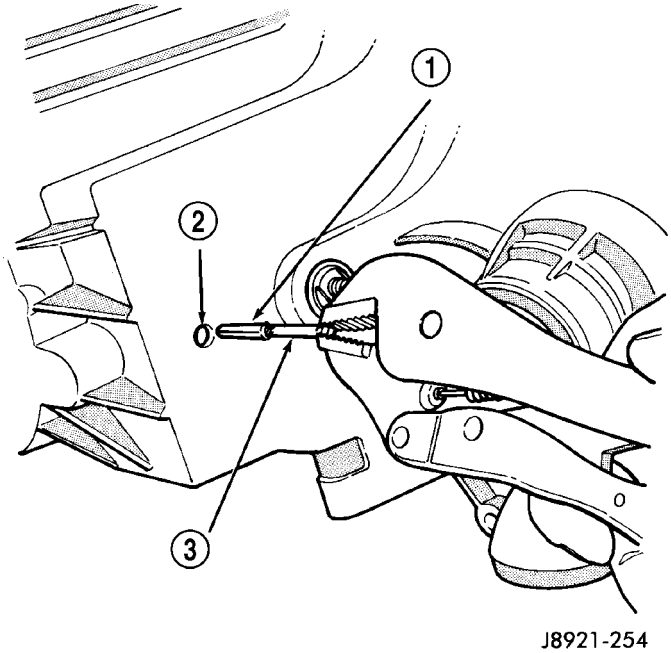

Fig. 81 Installing Low Range Fork Lockpin

1 - LOW RANGE FORK LOCK PIN
2 - ACCESS HOLE
3 - EASY-OUT

TRANSFER CASE - NV242 (Continued)

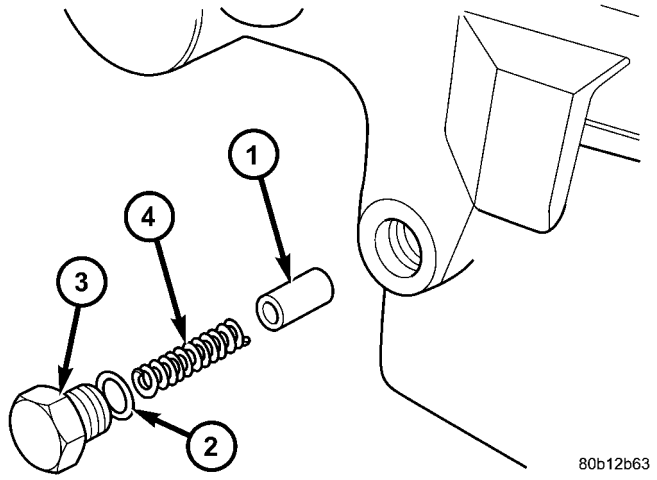

Fig. 82 Detent Pin, Spring And Plug Installation

1 - PLUNGER
2 - O-RING
3 - PLUG
4 - SPRING

FRONT OUTPUT SHAFT AND DRIVE CHAIN

(1) Install front output shaft (Fig. 83).

(2) Install drive chain (Fig. 83). Engage chain with front output shaft sprocket teeth.

(3) Install drive sprocket (Fig. 83). Engage drive sprocket teeth with chain. Then engage sprocket splines with mainshaft splines.

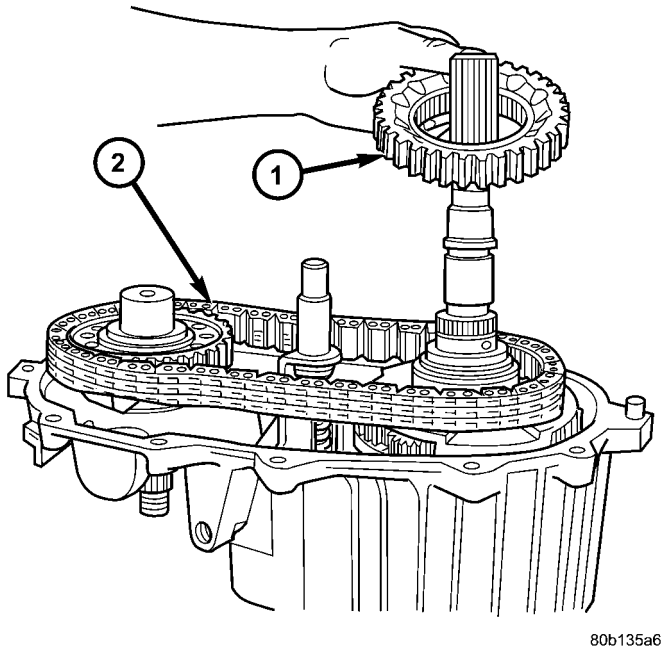

Fig. 83 Drive Chain And Sprocket Installation

1 - DRIVE SPROCKET
2 - DRIVE CHAIN

(4) Install drive sprocket snap-ring (Fig. 84).

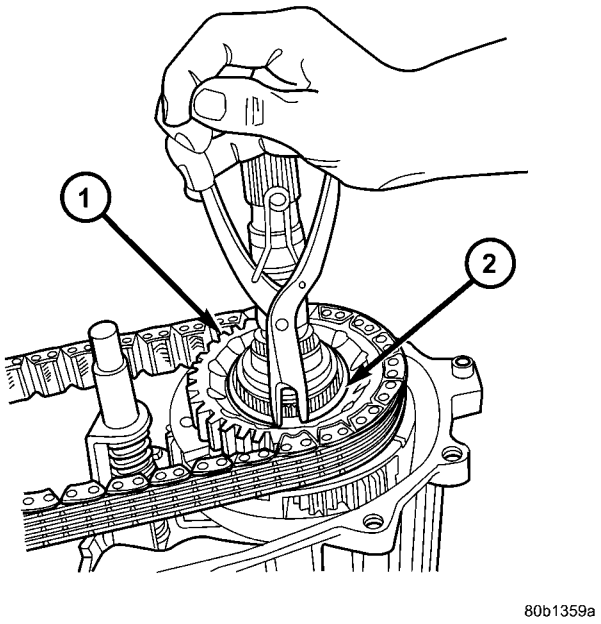

Fig. 84 Drive Sprocket Snap-Ring Installation

1 - DRIVE SPROCKET
2 - DRIVE SPROCKET SNAP-RING

OIL PUMP AND REAR CASE

(1) Insert oil pickup tube in oil pump and attach oil screen and connector hose to pickup tube. Then install assembled pump, tube and screen in rear case (Fig. 85). Be sure screen is seated in case slot as shown.

(2) Install magnet in front case pocket (Fig. 86).

(3) Apply 3 mm (1/8 in.) wide bead of Mopar® gasket maker or silicone adhesive sealer to seal surface of front case.

(4) Align and install rear case on front case. Be sure case locating dowels are in place and that mainshaft splines are engaged in oil pump inner gear.

(5) Install and tighten front case-to-rear case bolts to 41 N·m (30 ft. lbs.) torque. Be sure to install a washer under each bolt used at case dowel locations.

TRANSFER CASE - NV242 (Continued)

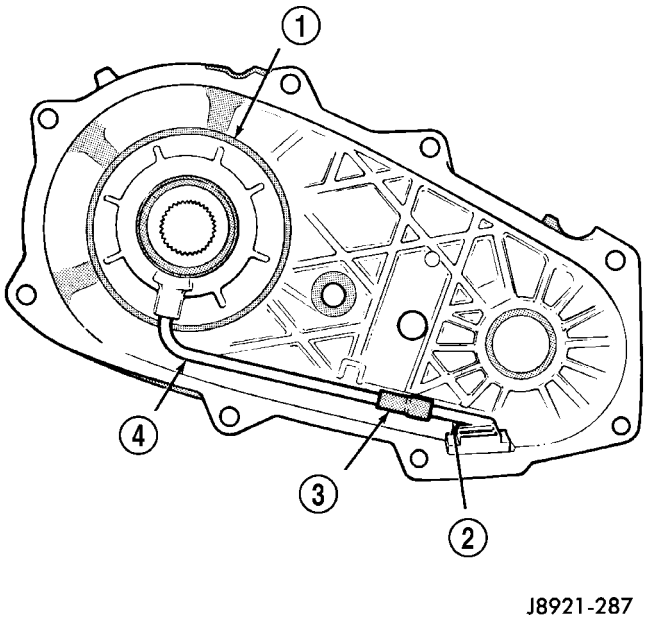

Fig. 85 Oil Screen And Pickup Tube Installation

1 - OIL PUMP
2 - OIL SCREEN
3 - CONNECTOR
4 - PICKUP TUBE

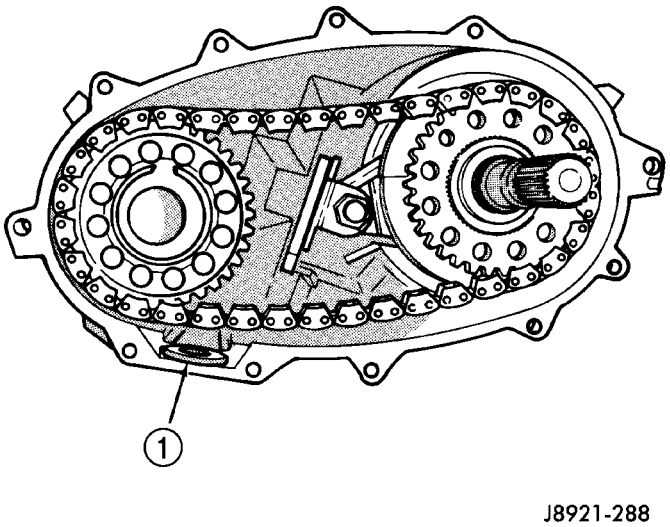

Fig. 86 Installing Case Magnet

1 - MAGNET

REAR RETAINER

(1) Remove rear bearing in retainer using Installer 8128 and Handle C-4171.

(2) Install rear bearing in retainer with Tools C-4171 and 5064 (Fig. 87).

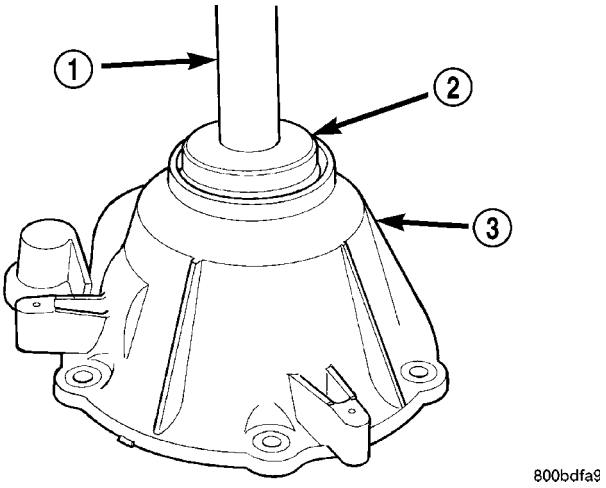

Fig. 87 Installing Rear Bearing In Retainer

1 - SPECIAL TOOL C-4171
2 - SPECIAL TOOL 5052
3 - REAR RETAINER

(3) Install rear bearing O.D. retaining ring with snap-ring pliers (Fig. 88). Be sure retaining ring is fully seated in retainer groove.

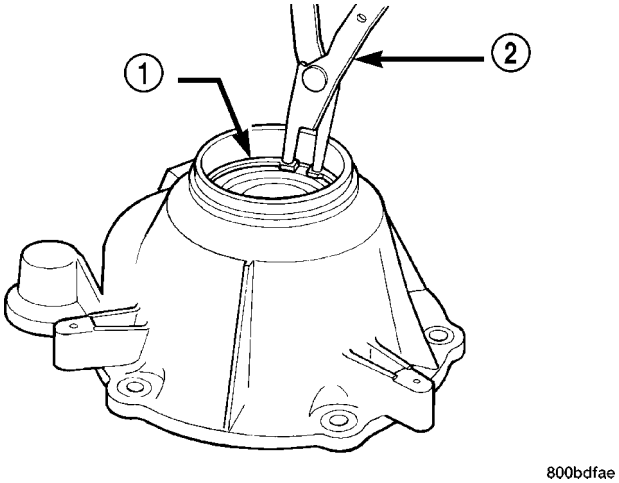

Fig. 88 Rear Bearing Retaining Ring Installation

1 - REAR BEARING O.D. RETAINING RING
2 - SNAP-RING PLIERS

TRANSFER CASE - NV242 (Continued)

(4) Apply bead of Mopar® Sealer P/N 82300234, or Loctite™ Ultra Gray, to mating surface of rear retainer. Sealer bead should be a maximum of 3/16 in.

(5) Install rear retainer on rear case. Tighten retainer bolts to 20-27 N·m (15-20 ft. lbs.) torque.

(6) Install rear bearing I.D. retaining ring and spacer on output shaft.

(7) Apply liberal quantity of petroleum jelly to new rear seal and to output shaft. Petroleum jelly is needed to protect seal lips during installation.

(8) Slide seal onto Seal Protector 8824 (Fig. 89). Slide seal protector and seal onto output shaft.

(9) Slide Installer 8691 onto seal protector with the recessed side of the tool toward the seal. Drive seal into rear bearing retainer with Installer 8691 (Fig. 90).

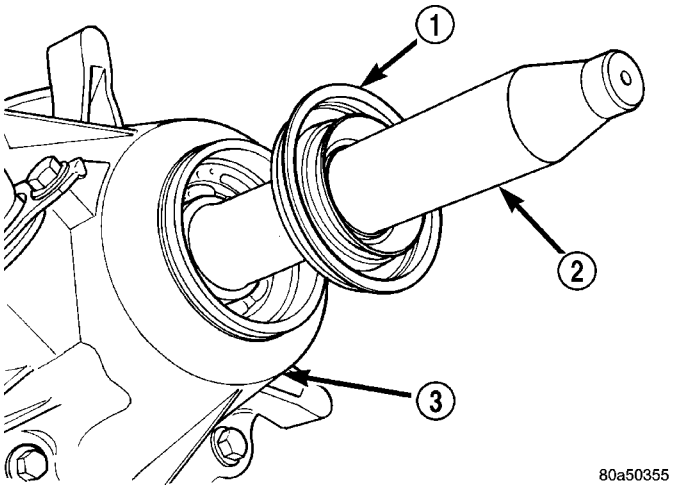

Fig. 89 Output Shaft

1 - OUTPUT SHAFT SEAL
2 - SPECIAL TOOL 8824
3 - TRANSFER CASE

(10) Install rear slinger with Installer 9023.

(11) Install boot on output shaft slinger and crimp retaining clamp with tool C-4975-A (Fig. 91).

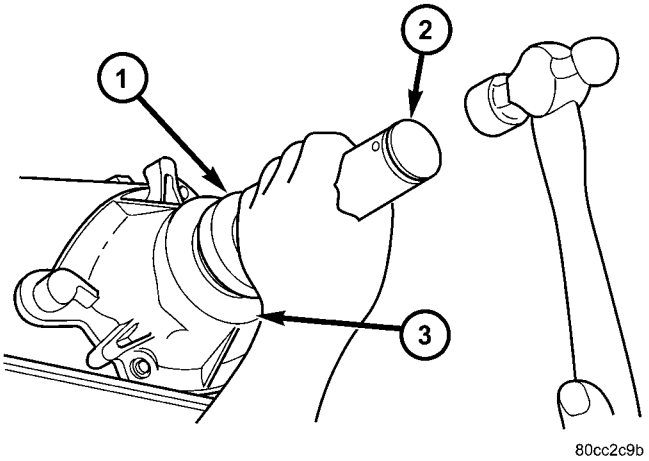

Fig. 90 Rear Seal Installation

1 - SPECIAL TOOL 8691
2 - HANDLE
3 - TRANSFER CASE

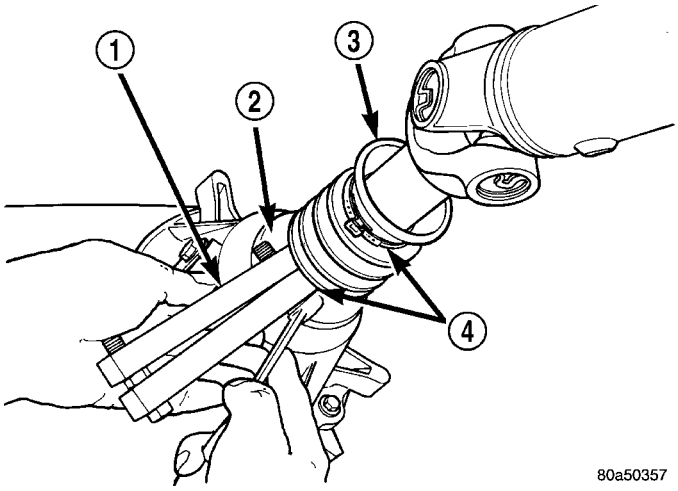

Fig. 91 Slinger Boot Installation

1 - SPECIAL TOOL C-4975-A
2 - SLINGER
3 - BOOT
4 - CLAMP

TRANSFER CASE - NV242 (Continued)

COMPANION FLANGE AND RANGE LEVER

(1) Install range lever and bolt on sector shaft (Fig. 92). Tighten bolt to 27-34 N·m (20-25 ft. lbs.) torque.

(2) Inspect the o-ring on the transfer case position sensor. Replace the o-ring if necessary.

(3) Install the transfer case position sensor in the front case (Fig. 93). Tighten sensor to 20-34 N·m (15-25 ft. lbs.) torque.

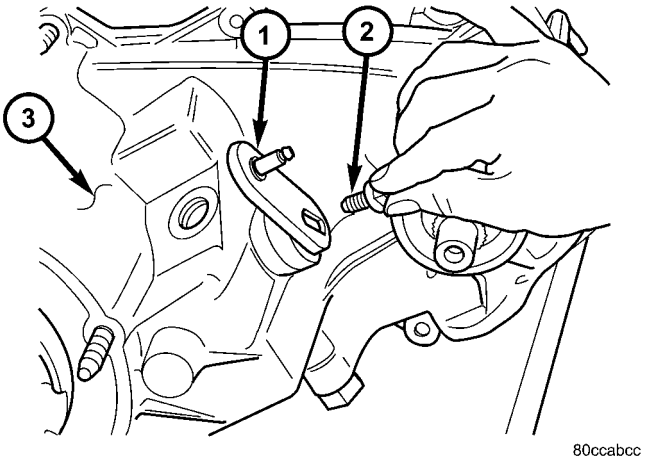

Fig. 92 Install Shift Lever Bolt

1 - RANGE LEVER
2 - RANGE LEVER BOLT
3 - TRANSFER CASE

(4) Install new seal washer on front output shaft (Fig. 94).

(5) Lubricate companion flange hub with transmission fluid and install flange onto the front ouput shaft.

(6) Install new seal washer on front shaft.

(7) Install new flange nut onto front output shaft.

(8) Tighten flange nut to 122-176 N·m (90-130 ft. lbs.) torque.

INSTALLATION

(1) Mount transfer case on a transmission jack.

(2) Secure transfer case to jack with chains.

(3) Position transfer case under vehicle.

(4) Align transfer case and transmission shafts and install transfer case on transmission.

(5) Install and tighten transfer case attaching nuts to 35 N·m (26 ft. lbs.) torque.

(6) Connect vent hose.

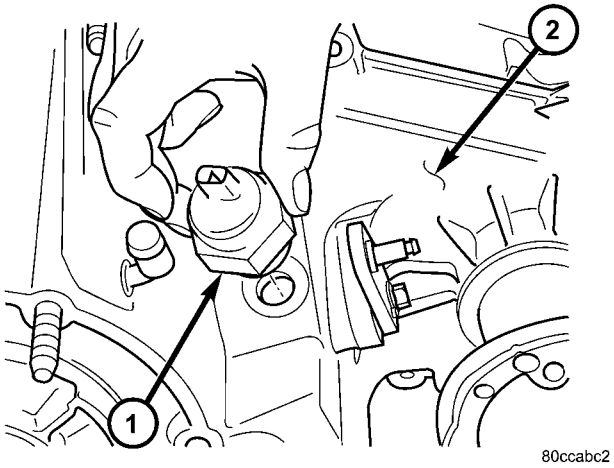

Fig. 93 Install Transfer Case Position Sensor

1 - TRANSFER CASE POSITION SENSOR
2 - TRANSFER CASE

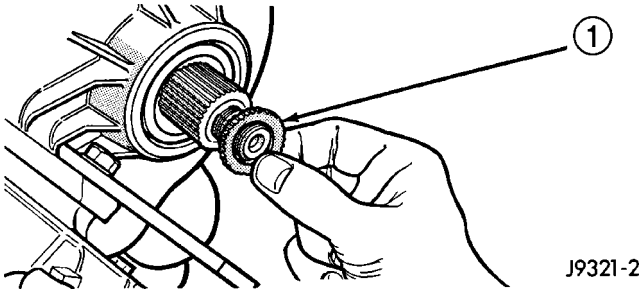

Fig. 94 Seal Washer Installation

1 - SEAL WASHER

(7) Connect transfer case position sensor connector to sensor.

(8) Align and connect propeller shafts. (Refer to 3 - DIFFERENTIAL & DRIVELINE/PROPELLER SHAFT/PROPELLER SHAFT - INSTALLATION).

(9) Fill transfer case with correct fluid. Check transmission fluid level. Correct as necessary.

(10) Install skid plate. (Refer to 13 - FRAME & BUMPERS/FRAME/TRANSFER CASE SKID PLATE - INSTALLATION)

(11) Remove transmission jack and support stand.

(12) Connect shift cable to transfer case range lever.

(13) Lower vehicle and verify transfer case shift operation.

TRANSFER CASE - NV242 (Continued)

SPECIFICATIONS

NV242 TRANSFER CASE

TORQUE SPECIFICATIONS

DESCRIPTION	N·m	Ft. Lbs.	In. Lbs.
Plug, Detent	16-24	12-18	-
Bolt, Differential Case	17-27	15-24	-
Plug, Drain/Fill	20-34	15-25	-
Bolt, Front Brg. Retainer	16-27	12-20	-
Bolt, Case Half	35-46	26-34	-
Nut, Front Companion Flange	122-176	90-130	-
Bolt, Range Lever	27-34	20-25	-
Bolt, Rear Retainer	35-46	26-34	-
Nuts, Mounting	35	26	-
Screw, Oil Pump	1.2-1.8	-	12-15
Sensor, Transfer Case Position	20-34	16-25	-

SPECIAL TOOLS

TRANSFER CASE - NV242

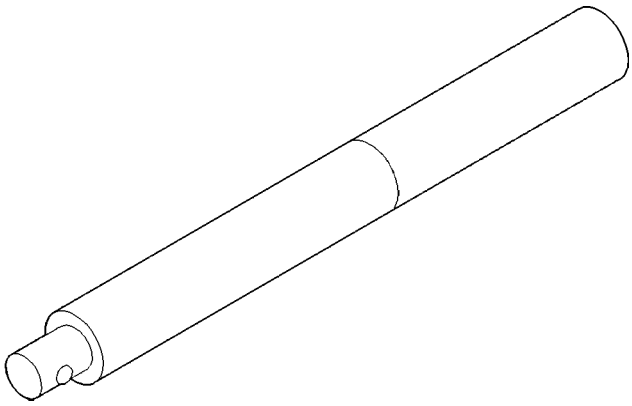

Handle, Universal - C-4171

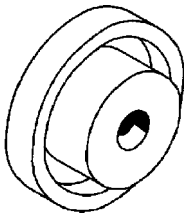

Remover - C-4210

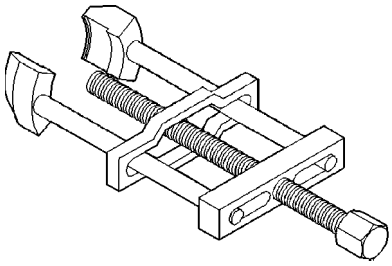

Puller, Slinger - MD-998056-A

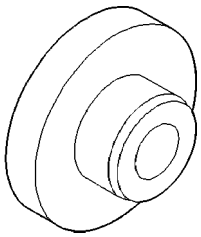

Installer, Bearing - 5064

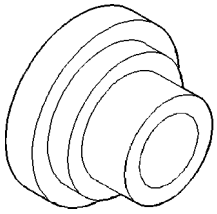

Installer - 8128

TRANSFER CASE - NV242 (Continued)

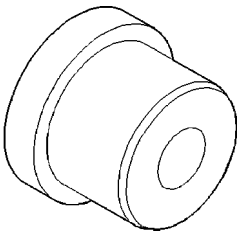

Installer - 5066

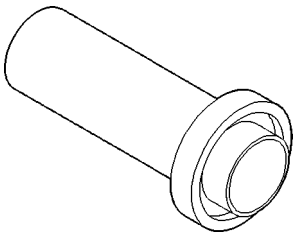

Installer - 6952-A

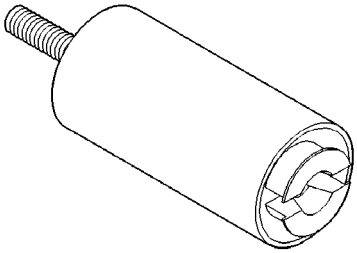

Remover - L-4454

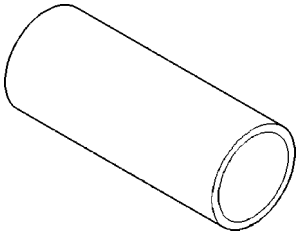

Cup - 8148

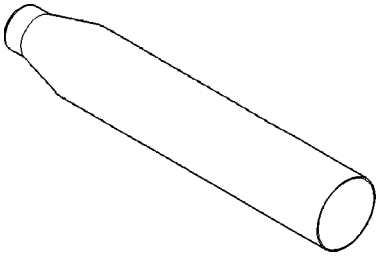

Seal Protector - 8824

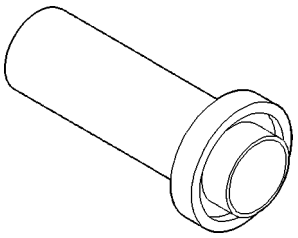

Installer, Seal - 8691

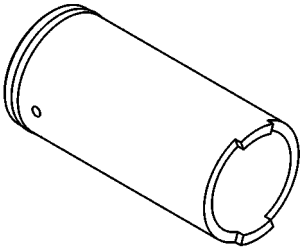

Installer, Output Shaft Slinger - 9023

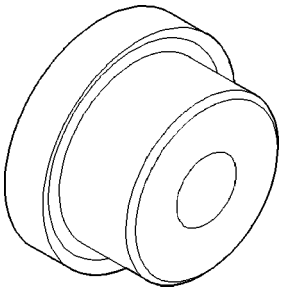

Installer, Input Gear Bearing - 7829-A

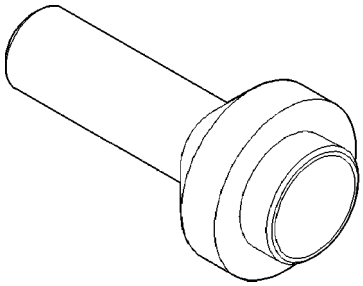

Installer, Seal - 7884

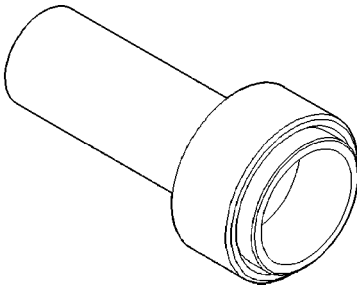

Installer, Pump Housing Seal - 7888

TRANSFER CASE - NV242 (Continued)

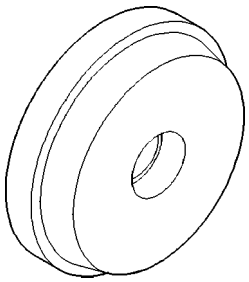

Installer, Bearing - 8033-A

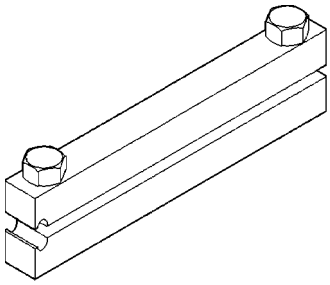

Installer, Boot Clamp - C-4975-A

FLUID

STANDARD PROCEDURE - FLUID DRAIN AND FILL

The fill and drain plugs are both in the rear case (Fig. 95). Correct fill level is to the bottom edge of the fill plug hole. Be sure the vehicle is level to ensure an accurate fluid level check.

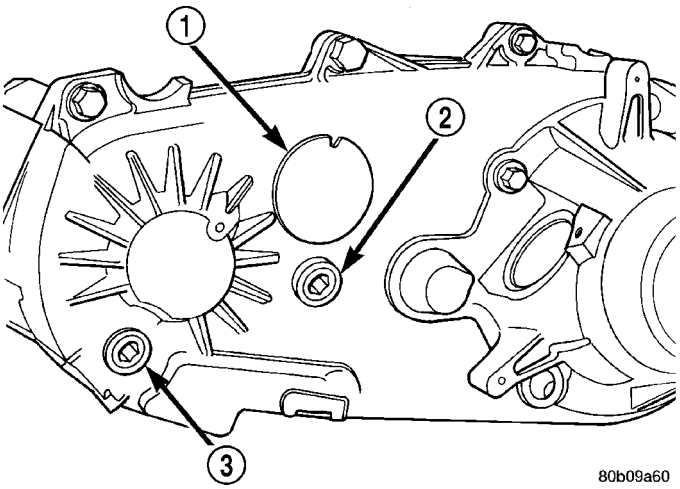

Fig. 95 Fill/Drain Plug and I.D. Tag Location - Typical

1 - I.D. TAG
2 - FILL PLUG
3 - DRAIN PLUG

FRONT OUTPUT SHAFT SEAL

REMOVAL

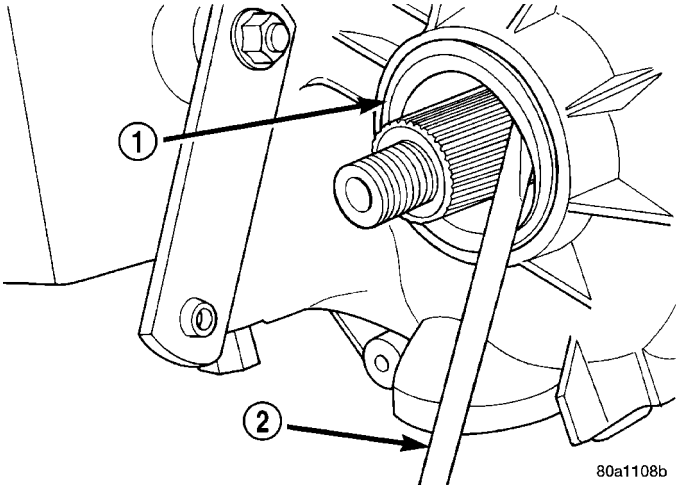

Fig. 96 Remove Front Output Shaft Seal - Typical

1 - OUTPUT SHAFT SEAL
2 - PRYBAR

(1) Raise vehicle.

(2) Remove front propeller shaft. (Refer to 3 - DIFFERENTIAL & DRIVELINE/PROPELLER SHAFT/PROPELLER SHAFT - REMOVAL)

(3) Remove front output shaft companion flange.

(4) Remove seal (1) from front case with pry tool (2) (Fig. 96).

INSTALLATION

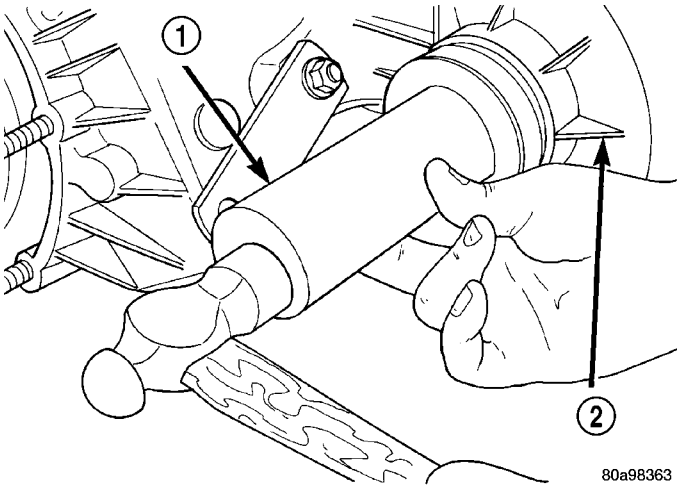

Fig. 97 Front Output Seal Installation - Typical

1 - INSTALLER 6952-A
2 - TRANSFER CASE

(1) Install new front output seal in front case (2) with Installer Tool 6952-A (1) (Fig. 97) as follows:

(a) Place new seal on tool. Garter spring on seal goes toward interior of case.

(b) Start seal in bore with light taps from hammer. Once seal is started, continue tapping seal into bore until installer tool seats against case.

(2) Install the front output shaft companion flange.

(3) Install the front propeller shaft. (Refer to 3 - DIFFERENTIAL & DRIVELINE/PROPELLER SHAFT/PROPELLER SHAFT - INSTALLATION)

POSITION SENSOR

DESCRIPTION

The transfer case position sensor (Fig. 98) is an electronic device whose output can be interpreted to indicate the transfer case's current operating mode. The sensor consists of a five position, resistive multiplexed circuit which returns a specific resistance value to the Powertrain Control Module (PCM) for each transfer case operating mode. The sensor is located on the top of the transfer case, just left of the transfer case centerline and rides against the sector plate roostercomb. The PCM supplies 5VDC (+/- 0.5V) to the sensor and monitors the return voltage

POSITION SENSOR (Continued)

to determine the sector plate, and therefore the transfer case, position.

OPERATION

During normal vehicle operation, the Powertrain Control Module (PCM) monitors the transfer case position sensor return voltage to determine the operating mode of the transfer case. Refer to the Operating Mode Versus Resistance table for the correct resistance for each position (Fig. 99).

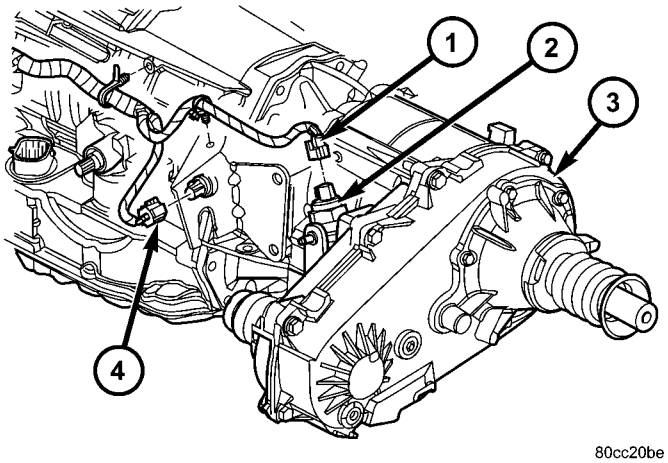

Fig. 98 Transfer Case Position Sensor and Connector

1 - TRANSFER CASE POSITION SENSOR CONNECTOR
2 - TRANSFER CASE POSITION SENSOR
3 - TRANSFER CASE
4 - OUTPUT SPEED SENSOR CONNECTOR

OPERATING MODE VERSUS RESISTANCE

SENSOR POSITION	OPERATING MODE	SENSOR RESISTANCE (ohms)
1	2WD	1124-1243
2	4WD PART TIME	650-719
3	4WD FULL TIME	389-431
4	NEUTRAL	199-221
5	4WD LOW	57-64

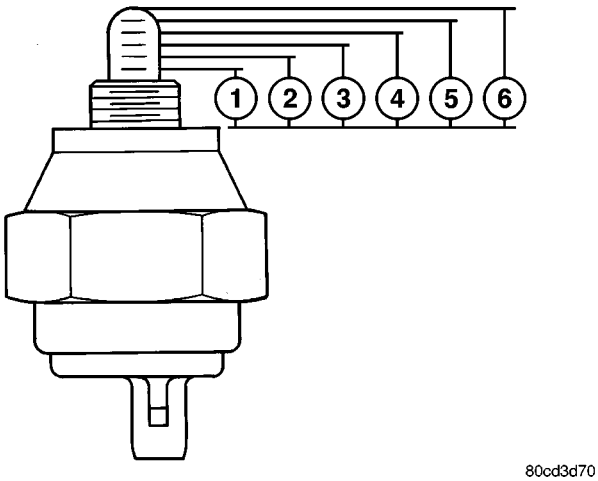

Fig. 99 Position Sensor Linear Movement

1 - POSITION 1 - 10mm ±0.5mm
2 - POSITION 2 - 12mm ±0.5mm
3 - POSITION 3 - 14mm ±0.5mm
4 - POSITION 4 - 16mm ±0.5mm
5 - POSITION 5 - 18mm ±0.5mm
6 - POSITION 6 - 20mm±0.5mm - FULL EXTENSION

POSITION SENSOR (Continued)

REMOVAL

(1) Raise and support the vehicle.

(2) Disengage the transfer case position sensor connector from the position sensor (Fig. 100).

(3) Remove the position sensor from the transfer case.

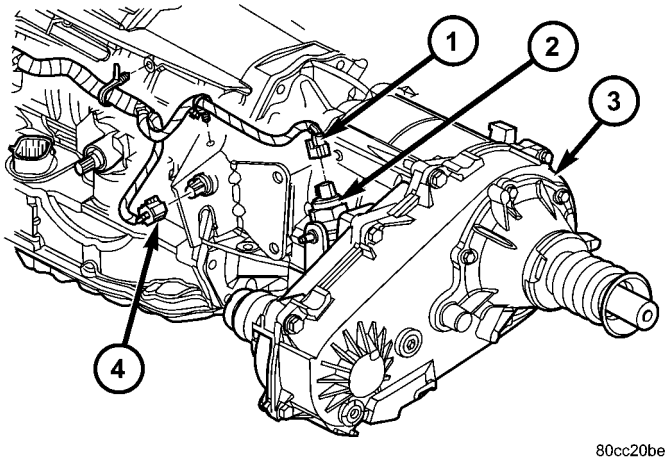

Fig. 100 Transfer Case Position Sensor and Connector

1 - TRANSFER CASE POSITION SENSOR CONNECTOR
2 - TRANSFER CASE POSITION SENSOR
3 - TRANSFER CASE
4 - OUTPUT SPEED SENSOR CONNECTOR

INSTALLATION

(1) Inspect the o-ring seal on the transfer case position sensor. Replace the o-ring if necessary.

(2) Install the transfer case position sensor into the transfer case. Torque the sensor to 20-34 N·m (15-25 ft.lbs.).

(3) Engage the transfer case position sensor connector to the position sensor.

(4) Lower vehicle.

(5) Verify proper sensor operation.

REAR OUTPUT SHAFT SEAL

REMOVAL

(1) Shift the transmission and transfer case into NEUTRAL.

(2) Raise and support vehicle.

(3) Mark a line across the pinion shaft and at each end of the propeller shaft for installation reference.

(4) Remove the U-joint strap bolts at the pinion shaft yoke.

(5) Pry open clamp holding the dust boot to propeller shaft yoke (Fig. 101).

(6) Slide the slip yoke off of the transmission/transfer case output shaft and remove the propeller shaft.

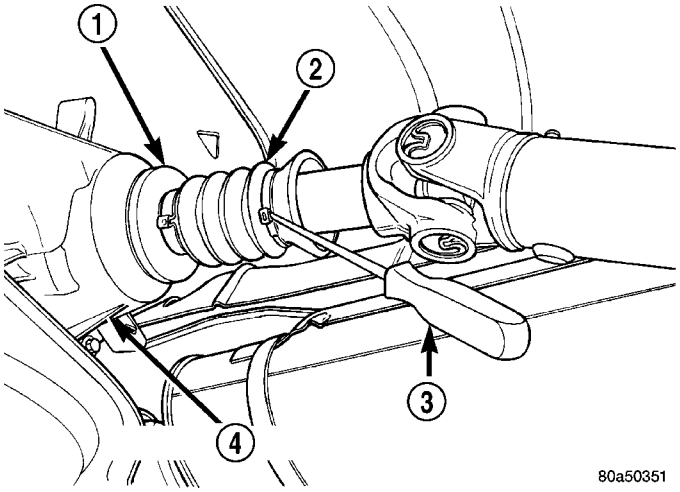

Fig. 101 Dust Boot Clamp

1 - SLINGER
2 - BOOT
3 - AWL
4 - TRANSFER CASE

(7) Spread band clamp which holds output shaft boot to the output shaft slinger with a suitable awl, or equivalent.

(8) Remove output shaft boot from slinger and output shaft.

(9) Remove the output shaft rear slinger using Puller MD-998056-A (Fig. 102).

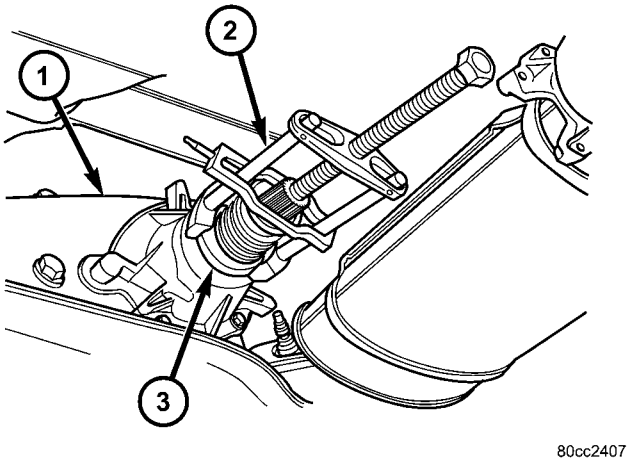

Fig. 102 Rear Slinger Removal

1 - TRANSFER CASE
2 - PULLER MD-998056-A
3 - REAR SLINGER

(10) Use a suitable pry tool, or a slide hammer mounted screw, to remove the seal from the rear retainer (Fig. 103).

REAR OUTPUT SHAFT SEAL (Continued)

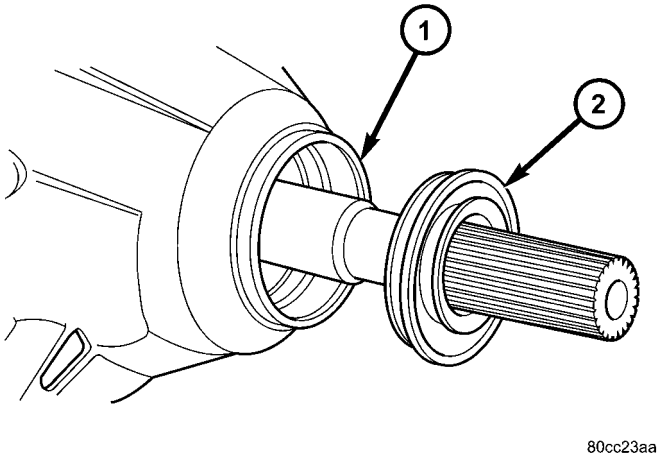

Fig. 103 Rear Retainer Seal

1 - REAR RETAINER
2 - OUTPUT SHAFT SEAL

INSTALLATION

(1) Apply liberal quantity of petroleum jelly to new rear seal and to output shaft. Petroleum jelly is needed to protect seal lips during installation.

(2) Slide seal onto Seal Protector 8824 (Fig. 104). Slide seal protector and seal onto output shaft.

(3) Slide Installer 8691 onto seal and mainshaft. Drive seal into rear bearing retainer (Fig. 105).

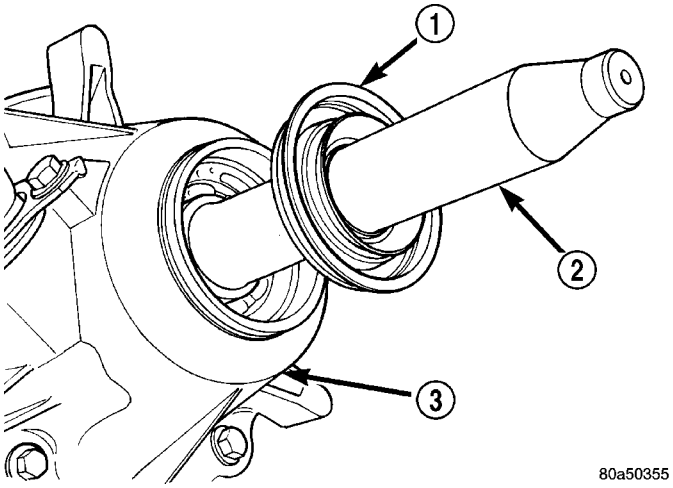

Fig. 104 Output Shaft Seal and Protector

1 - OUTPUT SHAFT SEAL
2 - SPECIAL TOOL 8824
3 - TRANSFER CASE

(4) Install a new output shaft rear slinger with Installer 9023.

(5) Install boot on output shaft slinger and crimp retaining clamp with tool C-4975-A (Fig. 106).

(6) Slide the slip yoke on the transmission/transfer case output shaft. Align installation reference marks at the axle yoke and install the propeller shaft.

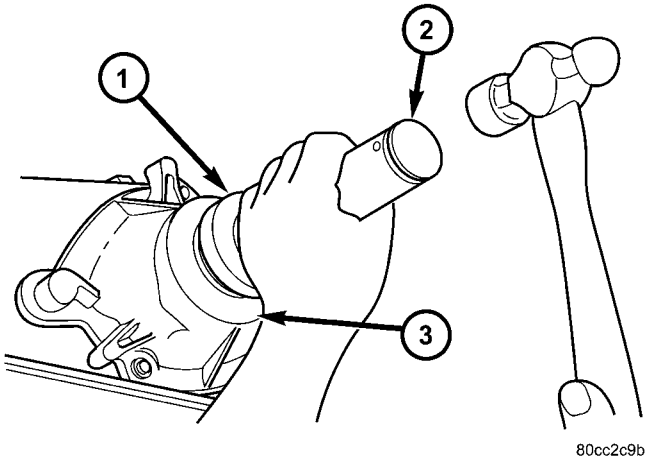

Fig. 105 Rear Seal Installation

1 - SPECIAL TOOL 8691
2 - HANDLE
3 - TRANSFER CASE

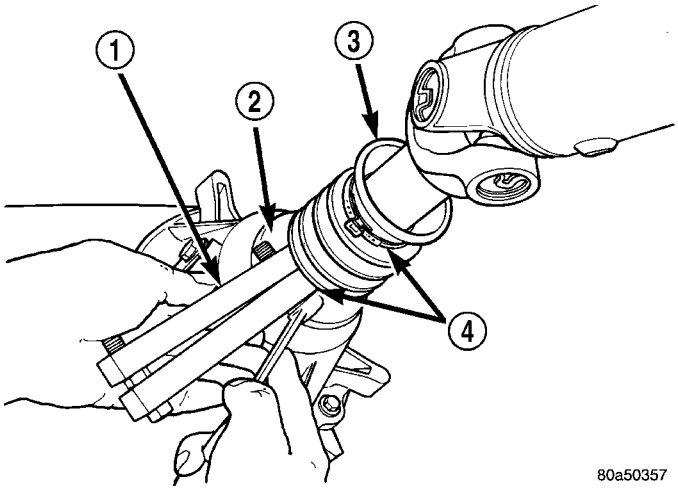

Fig. 106 Slinger Boot Installation - Typical

1 - SPECIAL TOOL C-4975-A
2 - SLINGER
3 - BOOT
4 - CLAMP

(7) Tighten the U-joint strap/clamp bolts at the axle yoke to 19 N·m (14 ft. lbs.).

(8) Crimp clamp with Clamp Tool C-4975A to hold dust boot to propeller shaft yoke.

(9) Remove support and lower the vehicle.

SHIFT LEVER

REMOVAL

(1) Shift transfer case into 4L.

(2) Raise vehicle.

(3) Remove clip securing the transfer case shift cable to the shift cable support bracket (Fig. 107) and (Fig. 108).

SHIFT LEVER (Continued)

(4) Disengage any additional shift cable routing clips, if necessary.

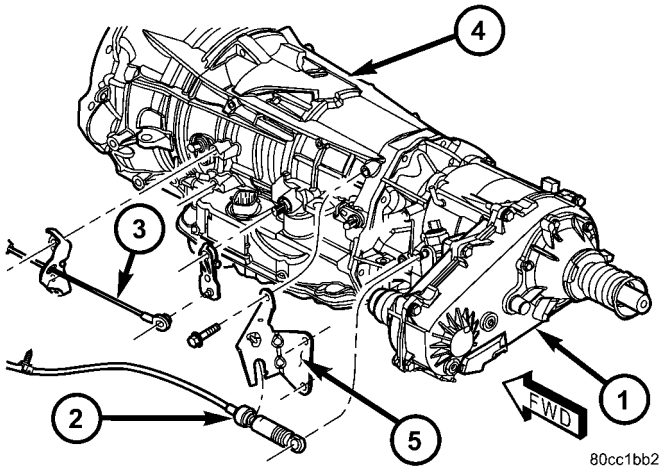

Fig. 107 Transfer Case Shift Cable - Automatic Transmission

1 - TRANSFER CASE
2 - TRANSFER CASE SHIFT CABLE
3 - TRANSMISSION SHIFT CABLE
4 - AUTOMATIC TRANSMISSION
5 - TRANSFER CASE SHIFT CABLE BRACKET

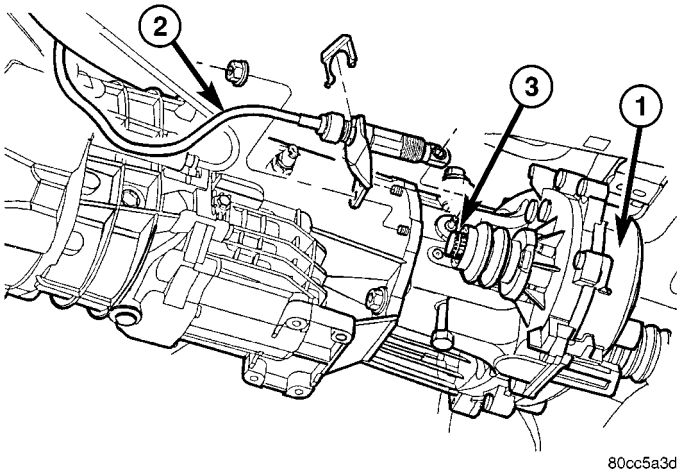

Fig. 108 Transfer Case Shift Cable - Manual Transmission

1 - TRANSFER CASE
2 - SHIFT CABLE
3 - MANUAL LEVER

(5) Disengage the shift cable from the transfer case manual lever.

(6) Lower vehicle.

(7) Remove the floor console as necessary to access the shifter mechanism. (Refer to 23 - BODY/INTERIOR/FLOOR CONSOLE - REMOVAL)

(8) Remove the nuts attaching lever assembly to floorpan and remove assembly and shift cable (Fig. 109).

(9) Remove the shifter mechanism and cable assembly from the vehicle.

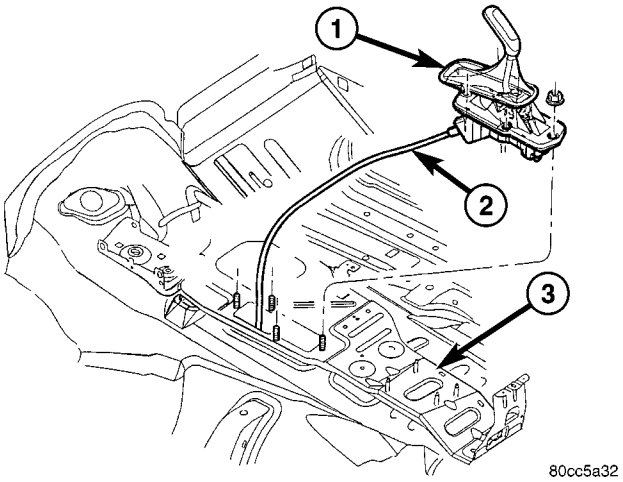

Fig. 109 Transfer Case Shifter Assembly

1 - SHIFTER ASSEMBLY
2 - SHIFT CABLE
3 - FLOOR PAN

INSTALLATION

(1) Route the shift cable through the opening in the floor pan.

(2) Position the shift mechanism over the shifter retaining studs on the floor pan.

(3) Install the nuts to hold the shifter mechanism to the floor pan. Tighten the nuts to 11.86 N·m (105 in.lbs.).

(4) Install any floor console components previously removed. (Refer to 23 - BODY/INTERIOR/FLOOR CONSOLE - INSTALLATION)

(5) Verify that the floor shifter is in the 4L position.

(6) Raise vehicle.

(7) Route the shift cable through the opening in the shift cable support bracket.

(8) Install the cable and a new spring clip into the slot in the support bracket.

(9) Install any additional routing clips on the shift cable.

(10) Verify that the transfer case is in the 4L position. The 4L position for the transfer case is with the manual lever to the full rearward position.

(11) Attach the shift cable to the transfer case manual lever.

(12) Lower vehicle and check for proper transfer case shifter operation.

TIRES/WHEELS

TABLE OF CONTENTS

	page
TIRES/WHEELS	
DIAGNOSIS AND TESTING	
TIRE AND WHEEL RUNOUT	1
STANDARD PROCEDURE	
TIRE ROTATION	2
MATCH MOUNTING	3
WHEEL BALANCING	4
TIRES	
DESCRIPTION	
TIRES	6
RADIAL-PLY TIRES	6
TIRE PRESSURE FOR HIGH SPEED	6
SPARE / TEMPORARY TIRE	7
FULL SIZE, SPARE WHEEL WITH MATCHING TIRE	7
REPLACEMENT TIRES	7
DIAGNOSIS AND TESTING	
PRESSURE GAUGES	7
TIRE INFLATION	7
TREAD WEAR INDICATORS	8
TIRE WEAR PATTERNS	8
TIRE NOISE OR VIBRATION	8
TIRE/VEHICLE LEAD	8
STANDARD PROCEDURE	
TIRE REPAIR AREA	10
CLEANING	
TIRES	10
SPECIFICATIONS	
TIRE SIZE CHART	10
SPARE TIRE CARRIER	
REMOVAL	10
INSTALLATION	10
WHEELS	
DESCRIPTION	
WHEEL DESIGN	10
DIAGNOSIS AND TESTING	
WHEEL INSPECTION	11
STANDARD PROCEDURE	
WHEEL INSTALLATION	11
WHEEL REPLACEMENT	11
SPECIFICATIONS	12
STUDS	
REMOVAL	12
INSTALLATION	12
TIRE PRESSURE MONITORING SYSTEM	
DESCRIPTION	
BASE TIRE PRESSURE MONITORING	13
PREMIUM TIRE PRESSURE MONITORING	13
WIRELESS CONTROL MODULE (WCM)	13
OPERATION	
BASE TIRE PRESSURE MONITORING	13
PREMIUM TIRE PRESSURE MONITORING	14
DIAGNOSIS AND TESTING - TIRE PRESSURE MONITORING SYSTEM	14
SPECIFICATIONS	
TORQUE CHART	14
SENSOR	
DESCRIPTION	15
OPERATION	16
CAUTION	16
DIAGNOSIS AND TESTING	
TIRE PRESSURE SENSOR	16
REMOVAL	17
INSTALLATION	18
TRANSPONDER	
DESCRIPTION	20
OPERATION	20
REMOVAL	
FRONT TRANSPONDER	20
REAR TRANSPONDER	20
INSTALLATION	
FRONT TRANSPONDER	21
REAR TRANSPONDER	21

TIRES/WHEELS

DIAGNOSIS AND TESTING

TIRE AND WHEEL RUNOUT

Radial runout is the difference between the high and low points on the tire or wheel (Fig. 1).

Lateral runout is the **wobble** of the tire or wheel.

Radial runout of more than 1.5 mm (.060 inch) measured at the center line of the tread may cause the vehicle to shake.

Lateral runout of more than 2.0 mm (.080 inch) measured near the shoulder of the tire may cause the vehicle to shake.

Sometimes radial runout can be reduced. Relocate the wheel and tire assembly on the mounting studs (See Method 1). If this does not reduce runout to an acceptable level, the tire can be rotated on the wheel. (See Method 2).

TIRES/WHEELS (Continued)

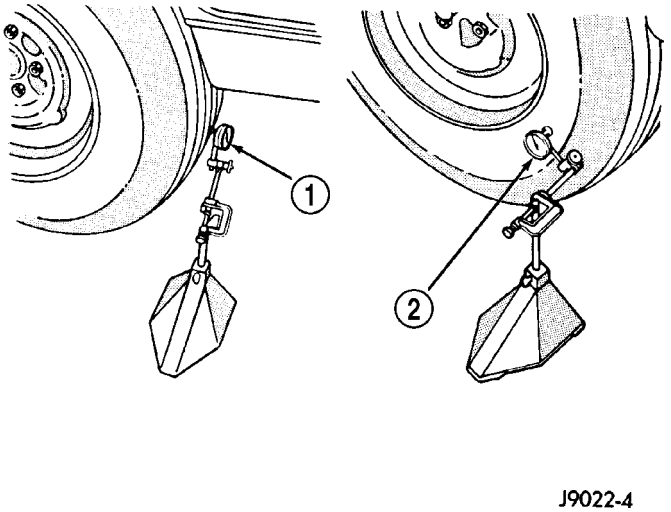

Fig. 1 Checking Tire/Wheel/Hub Runout

1 - RADIAL RUNOUT
2 - LATERAL RUNOUT

METHOD 1 (RELOCATE WHEEL ON HUB)

(1) Drive vehicle a short distance to eliminate tire flat spotting from a parked position.

(2) Check wheel bearings and adjust if adjustable or replace if necessary.

(3) Check the wheel mounting surface.

(4) Relocate wheel on the mounting, two studs over from the original position.

(5) Tighten wheel nuts until all are properly torqued, to eliminate brake distortion.

(6) Check radial runout. If still excessive, mark tire sidewall, wheel, and stud at point of maximum runout and proceed to Method 2.

METHOD 2 (RELOCATE TIRE ON WHEEL)

NOTE: Rotating the tire on wheel is particularly effective when there is runout in both tire and wheel.

(1) Remove tire from wheel and mount wheel on service dynamic balance machine.

(2) Check wheel radial runout (Fig. 2) and lateral runout (Fig. 3).

- STEEL WHEELS: Radial runout 0.040 in., Lateral runout 0.045 in. (average-maximum)
- ALUMINUM WHEELS: Radial runout 0.030 in., Lateral runout 0.035 in. (average-maximum)

(3) If point of greatest wheel lateral runout is near original chalk mark, remount tire 180 degrees. Recheck runout or match mount, (Refer to 22 - TIRES/WHEELS - STANDARD PROCEDURE).

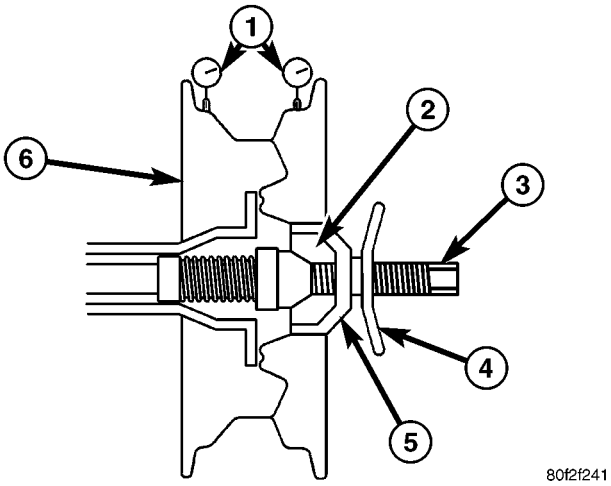

Fig. 2 RADIAL RUNOUT

1 - DIAL INDICATORS
2 - MOUNTING CONE
3 - SPINDLE SHAFT
4 - WING NUT
5 - PLASTIC CUP
6 - WHEEL

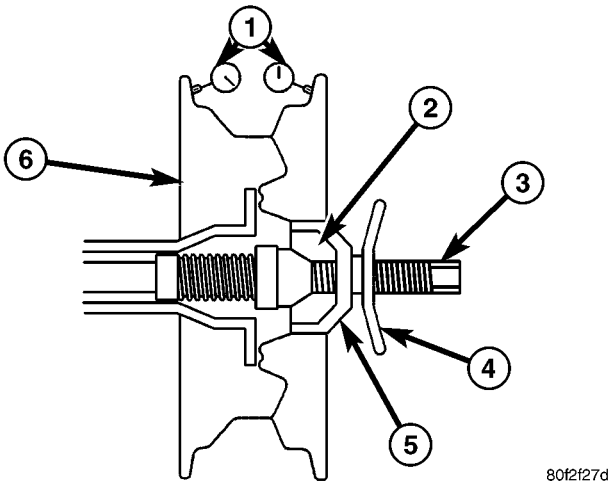

Fig. 3 LATERAL RUNOUT

1 - DIAL INDICATORS
2 - MOUNTING CONE
3 - SPINDLE SHAFT
4 - WING NUT
5 - PLASTIC CUP
6 - WHEEL

STANDARD PROCEDURE

TIRE ROTATION

Tires on the front and rear operate at different loads and perform different steering, driving, and braking functions. For these reasons they wear at unequal rates and tend to develop irregular wear patterns. These effects can be reduced by rotating the tires at regular intervals. The benefits of tire rotation are:

TIRES/WHEELS (Continued)

- Increase tread life
- Maintain traction levels
- A smooth, quiet ride

The suggested method of tire rotation is (Fig. 4). Other rotation methods can be used, but they will not provide all the tire longevity benefits.

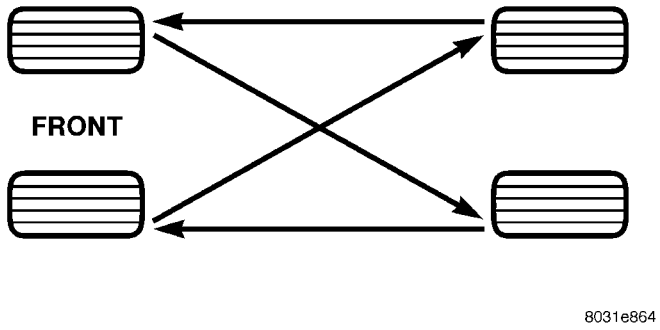

Fig. 4 Tire Rotation Pattern

MATCH MOUNTING

Tires and wheels are currently match mounted at the factory. Match mounting is a technique used to reduce runout in the wheel/tire assembly. This means that the high spot of the tire is aligned with the low spot on the wheel rim. The high spot on the tire is marked with a paint mark or a bright colored adhesive label on the outboard sidewall. The low spot on the rim is identified with a label on the outside of the rim and a dot on the inside of the rim. If the outside label has been removed the tire will have to be removed to locate the dot on the inside of the rim.

Before dismounting a tire from its wheel, a reference mark should be placed on the tire at the valve stem location. This reference will ensure that it is remounted in the original position on the wheel.

(1) Use a dial indicator to locate the high spot of the tire on the center tread rib (Fig. 5). Record the indicator reading and mark the high spot on the tire. Place a mark on the tire at the valve stem location (Fig. 6).

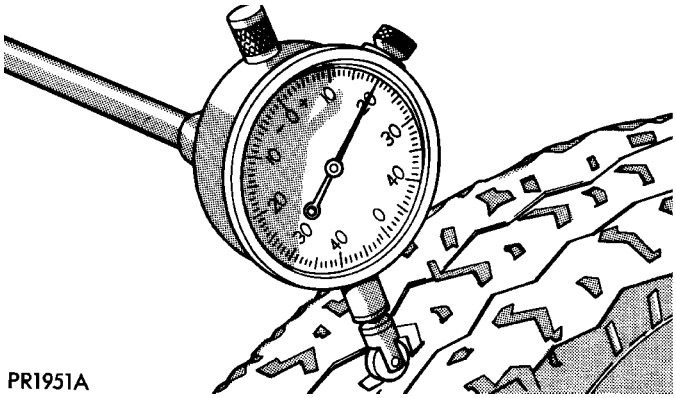

Fig. 5 Dial Indicator

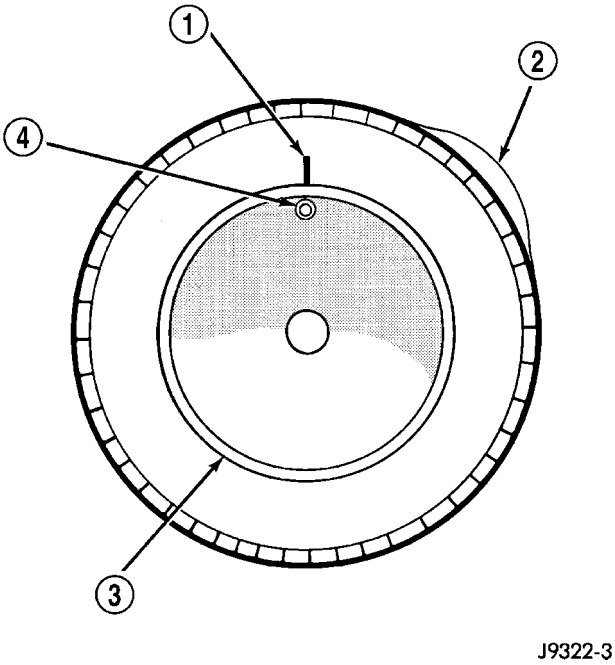

Fig. 6 First Measurement On Tire

1 - REFERENCE MARK
2 - 1ST MEASUREMENT
HIGH SPOT MARK TIRE AND RIM
3 - WHEEL
4 - VALVE STEM

(2) Break down the tire and remount it 180 degrees on the rim (Fig. 7).

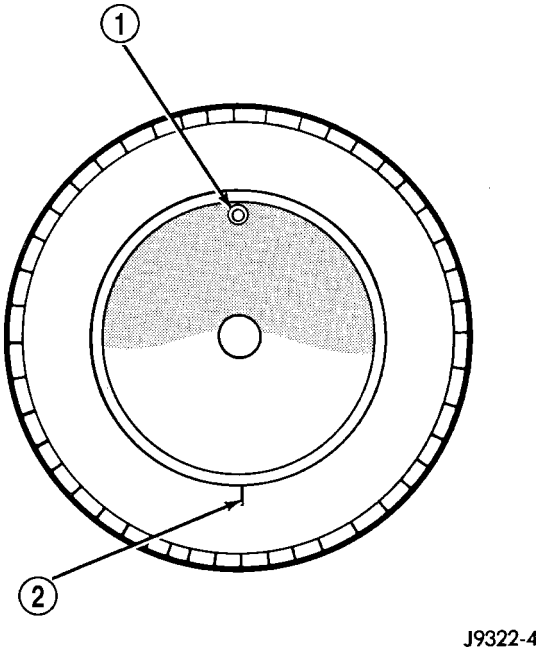

Fig. 7 Remount Tire 180 Degrees

1 - VALVE STEM
2 - REFERENCE MARK

TIRES/WHEELS (Continued)

(3) Measure the total runout again and mark the tire to indicate the high spot.

(4) If runout is still excessive use the following procedures.

(a) If the high spot is within 101.6 mm (4.0 in.) of the first spot and is still excessive, replace the tire.

(b) If the high spot is within 101.6 mm (4.0 in.) of the first spot on the wheel, the wheel may be out of specifications, (Refer to 22 - TIRES/WHEELS - DIAGNOSIS AND TESTING).

(c) If the high spot is NOT within 101.6 mm (4.0 in.) of either high spot, draw an arrow on the tread from second high spot to first. Break down the tire and remount it 90 degrees on rim in that direction (Fig. 8). This procedure will normally reduce the runout to an acceptable amount.

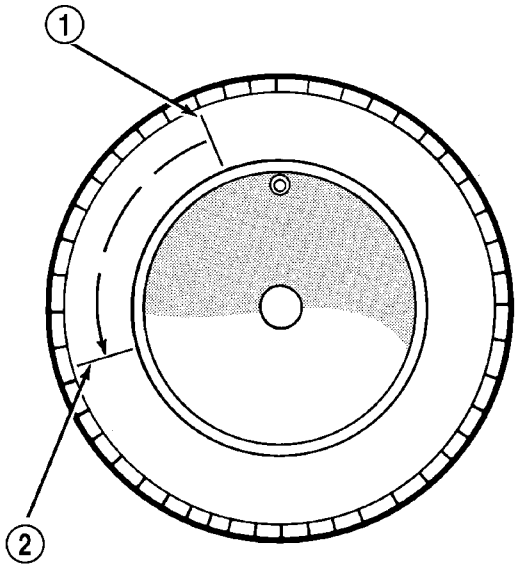

Fig. 8 Remount Tire 90 Degrees In Direction of Arrow

1 - 2ND HIGH SPOT ON TIRE
2 - 1ST HIGH SPOT ON TIRE

WHEEL BALANCING

It is recommended that a two plane service dynamic balancer be used when a tire and wheel assembly require balancing. Refer to balancer operation instructions for proper cone mounting procedures. Typically use front cone mounting method for steel wheels. For aluminum wheel use back cone mounting method without cone spring.

NOTE: Static should be used only when a two plane balancer is not available.

NOTE: Cast aluminum and forged aluminum wheels require coated balance weights and special alignment equipment.

Wheel balancing can be accomplished with either on or off vehicle equipment. When using on-vehicle balancing equipment, remove the opposite wheel/tire. Off-vehicle balancing is recommended.

For static balancing, find location of heavy spot causing the imbalance. Counter balance wheel directly opposite the heavy spot. Determine weight required to counter balance the area of imbalance. Place half of this weight on the **inner** rim flange and the other half on the **outer** rim flange (Fig. 9).

For dynamic balancing, the balancing equipment is designed to locate the amount of weight to be applied to both the inner and outer rim flange (Fig. 10).

TIRES/WHEELS (Continued)

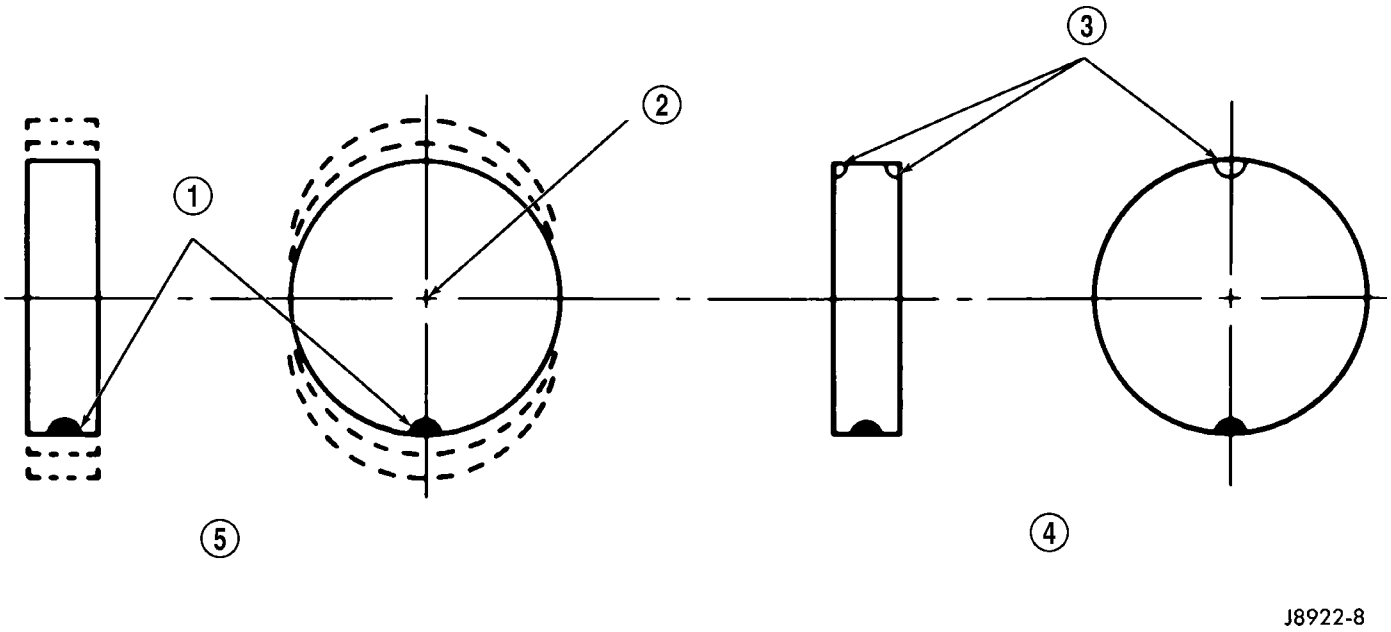

Fig. 9 Static Unbalance & Balance

1 - HEAVY SPOT
2 - CENTER LINE OF SPINDLE
3 - ADD BALANCE WEIGHTS HERE
4 - CORRECTIVE WEIGHT LOCATION
5 - TIRE OR WHEEL TRAMP, OR WHEEL HOP

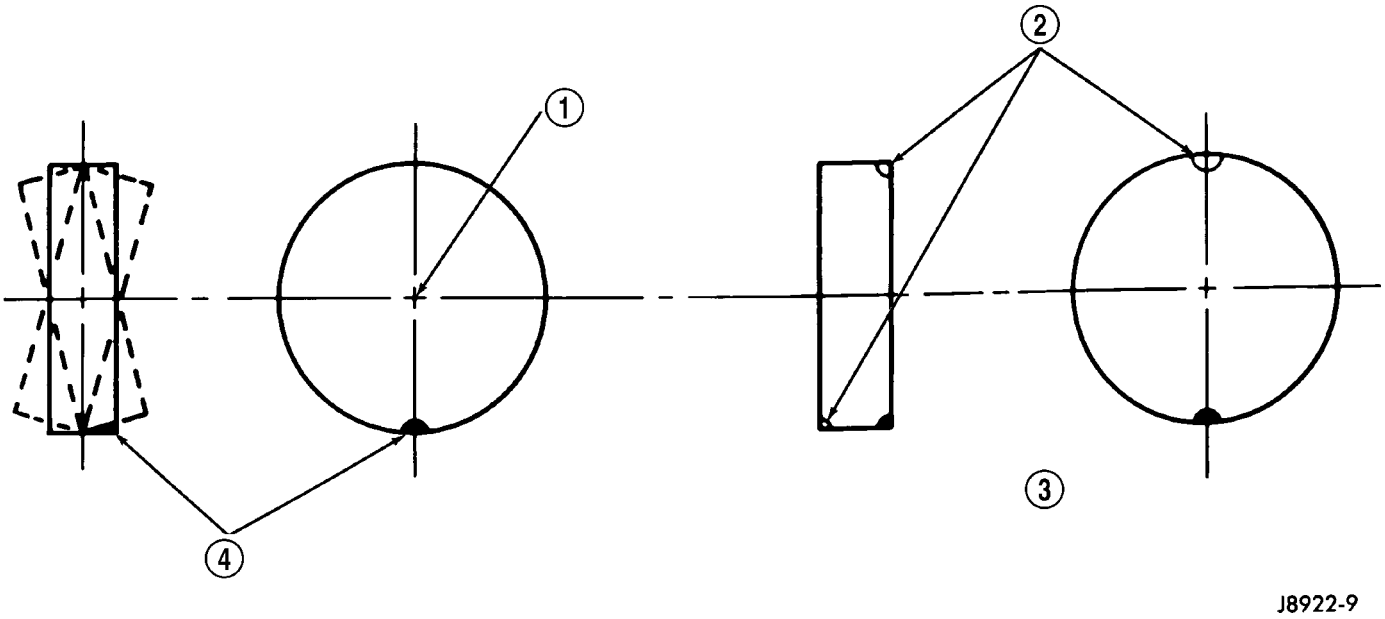

Fig. 10 Dynamic Unbalance & Balance

1 - CENTER LINE OF SPINDLE
2 - ADD BALANCE WEIGHTS HERE
3 - CORRECTIVE WEIGHT LOCATION
4 - HEAVY SPOT WHEEL SHIMMY AND VIBRATION

TIRES

DESCRIPTION

TIRES

Tires are designed and engineered for each specific vehicle. They provide the best overall performance for normal operation. The ride and handling characteristics match the vehicle's requirements. With proper care they will give excellent reliability, traction, skid resistance, and tread life.

Driving habits have more effect on tire life than any other factor. Careful drivers will obtain in most cases, much greater mileage than severe use or careless drivers. A few of the driving habits which will shorten the life of any tire are:

- Rapid acceleration
- Severe brake applications
- High speed driving
- Excessive speeds on turns
- Striking curbs and other obstacles

Radial-ply tires are more prone to irregular tread wear. It is important to follow the tire rotation interval, (Refer to 22 - TIRES/WHEELS - STANDARD PROCEDURE). This will help to achieve a greater tread life.

TIRE IDENTIFICATION

Tire type, size, aspect ratio and speed rating are encoded in the letters and numbers imprinted on the side wall of the tire. Refer to the chart to decipher the tire identification code (Fig. 11).

Performance tires have a speed rating letter after the aspect ratio number.

LETTER	SPEED RATING
S	180 km/h (112 mph)
T	190 km/h (118 mph)
U	200 km/h (124 mph)
H	210 km/h (130 mph)
V	240 km/h (149 mph)
W	270 km/h (168 mph)
Y	300 km/h (186 mph)

The speed rating is not always printed on the tire sidewall.

TIRE CHAINS

Tire snow chains may be used on **certain** models. Refer to the Owner's Manual for more information.

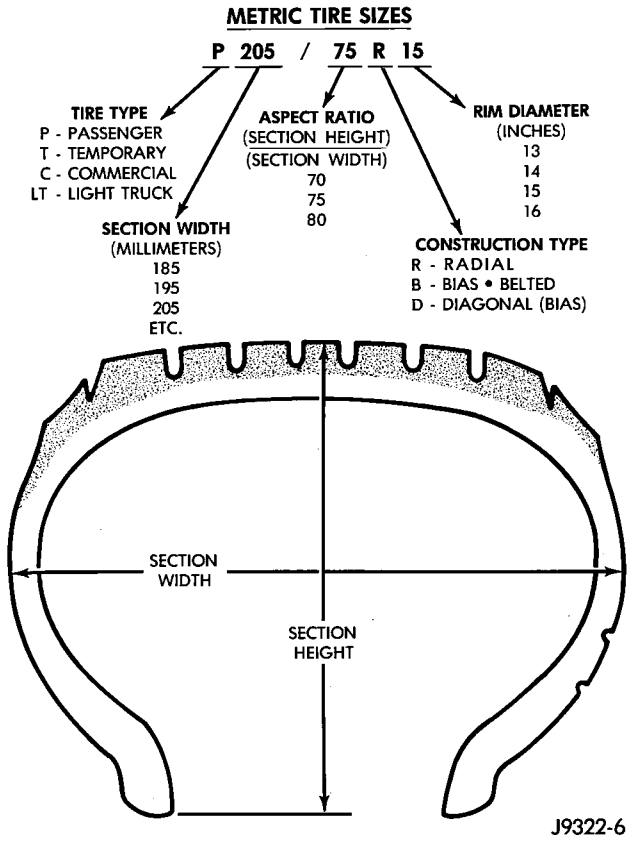

Fig. 11 Tire Identification

RADIAL-PLY TIRES

Radial-ply tires improve handling, tread life and ride quality, and decrease rolling resistance.

Radial-ply tires must always be used in sets of four. Under no circumstances should they be used on the front only. They may be mixed with temporary spare tires when necessary. A maximum speed of 50 MPH is recommended while a temporary spare is in use.

Radial-ply tires have the same load-carrying capacity as other types of tires of the same size. They also use the same recommended inflation pressures.

The use of oversized tires, either in the front or rear of the vehicle, can cause vehicle drive train failure. This could also cause inaccurate wheel speed signals when the vehicle is equipped with Anti-Lock Brakes.

The use of tires from different manufactures on the same vehicle is NOT recommended. The proper tire pressure should be maintained on all four tires.

TIRE PRESSURE FOR HIGH SPEED

Refer to the Vehicles Owners Manual package.

TIRES (Continued)

SPARE / TEMPORARY TIRE

The temporary spare tire is designed for emergency use only. The original tire should be repaired or replaced at the first opportunity, then reinstalled. Do not exceed speeds of 50 M.P.H. when using the temporary spare tire. Refer to Owner's Manual for complete details.

FULL SIZE, SPARE WHEEL WITH MATCHING TIRE

The spare is a full usage wheel with a matching tire, It can be used within the (posted legal) speed limits or distance limitations as of the rest of the vehicles four tires. Refer to Owner's Manual for complete details.

REPLACEMENT TIRES

The original equipment tires provide a proper balance of many characteristics such as:

- Ride
- Noise
- Handling
- Durability
- Tread life
- Traction
- Rolling resistance
- Speed capability

It is recommended that tires equivalent to the original equipment tires be used when replacement is needed.

Failure to use equivalent replacement tires may adversely affect the safety and handling of the vehicle.

The use of oversize tires may cause interference with vehicle components. Under extremes of suspension and steering travel, interference with vehicle components may cause tire damage.

WARNING: FAILURE TO EQUIP THE VEHICLE WITH TIRES HAVING ADEQUATE SPEED CAPABILITY CAN RESULT IN SUDDEN TIRE FAILURE.

DIAGNOSIS AND TESTING

PRESSURE GAUGES

A quality air pressure gauge is recommended to check tire pressure. After checking the air pressure, replace valve cap finger tight.

TIRE INFLATION

Under inflation will cause rapid shoulder wear, tire flexing, and possible tire failure (Fig. 12).

Over inflation will cause rapid center wear and loss of the tire's ability to cushion shocks (Fig. 13).

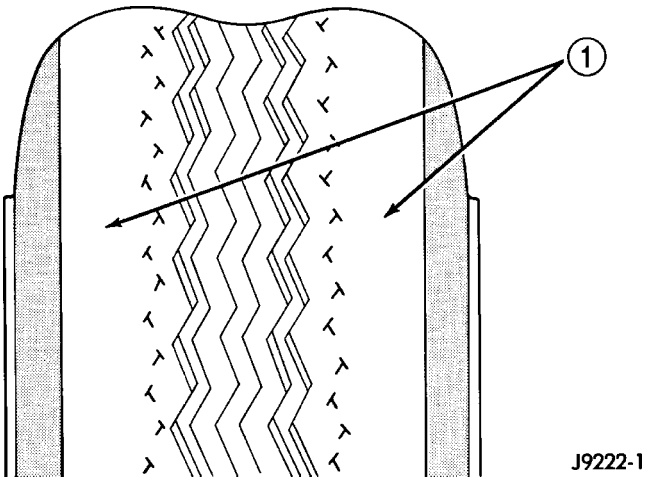

Fig. 12 Under Inflation

1 - THIN TIRE THREAD AREAS

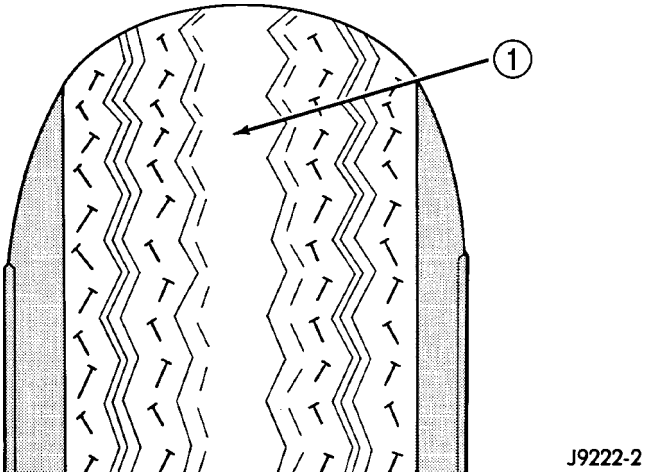

Fig. 13 Over Inflation Wear

1 - THIN TIRE THREAD AREA

Improper inflation can cause:

- Uneven wear patterns
- Reduced tread life
- Reduced fuel economy
- Unsatisfactory ride
- Vehicle drift

For proper tire pressure specification refer to the Tire Inflation Pressure Chart provided with the vehicle.

Tire pressures have been chosen to provide safe operation, vehicle stability, and a smooth ride. Tire pressure should be checked cold once a month. The spare tire pressure should be check at least twice annually. Tire pressure decreases as the ambient temperature drops. Check tire pressure frequently when ambient temperature varies widely.

Inflation pressures specified on the placards are cold inflation pressure. The vehicle must sit for at least 3 hours to obtain the correct cold inflation pres-

TIRES (Continued)

sure reading. Or driven less than one mile after sitting for 3 hours. Tire inflation pressures may increase from 2 to 6 pounds per square inch (psi) during operation, due to increased tire temperature.

WARNING: OVER OR UNDER INFLATED TIRES CAN AFFECT VEHICLE HANDLING AND TREAD WEAR. THIS MAY CAUSE THE TIRE TO FAIL SUDDENLY, RESULTING IN LOSS OF VEHICLE CONTROL.

TREAD WEAR INDICATORS

Tread wear indicators are molded into the bottom of the tread grooves. When tread depth is 1.6 mm (1/16 in.), the tread wear indicators will appear as a 13 mm (1/2 in.) band (Fig. 14).

Tire replacement is necessary when indicators appear in two or more grooves or if localized balding occurs.

TIRE WEAR PATTERNS

Under inflation will cause wear on the shoulders of tire. Over inflation will cause wear at the center of tire.

Excessive camber causes the tire to run at an angle to the road. One side of tread is then worn more than the other (Fig. 15).

Excessive toe-in or toe-out causes wear on the tread edges and a feathered effect across the tread (Fig. 15).

TIRE NOISE OR VIBRATION

Radial-ply tires are sensitive to force impulses caused by improper mounting, vibration, wheel defects, or possibly tire imbalance.

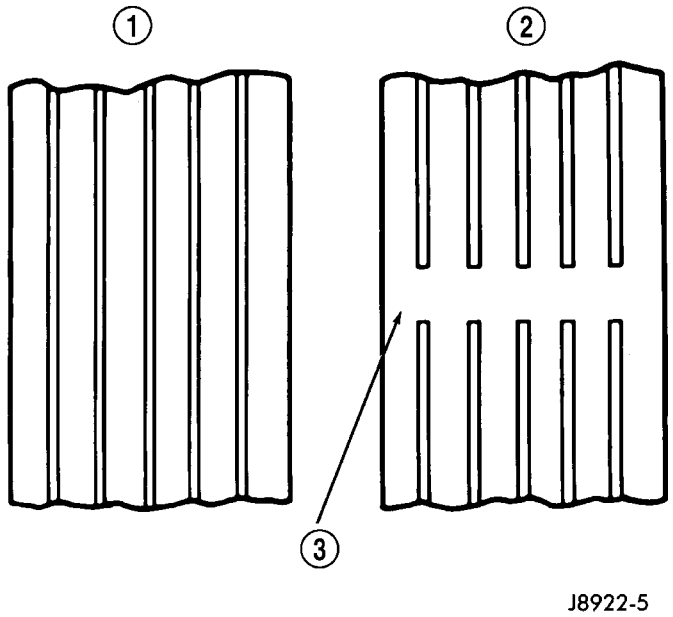

Fig. 14 Tread Wear Indicators

1 - TREAD ACCEPTABLE
2 - TREAD UNACCEPTABLE
3 - WEAR INDICATOR

To find out if tires are causing the noise or vibration, drive the vehicle over a smooth road at varying speeds. Note the noise level during acceleration and deceleration. The engine, differential and exhaust noises will change as speed varies, while the tire noise will usually remain constant.

TIRE/VEHICLE LEAD

Use the following Vehicle Lead Diagnosis And Correction Chart to diagnose and correct a vehicle lead or drift problem (Fig. 16).

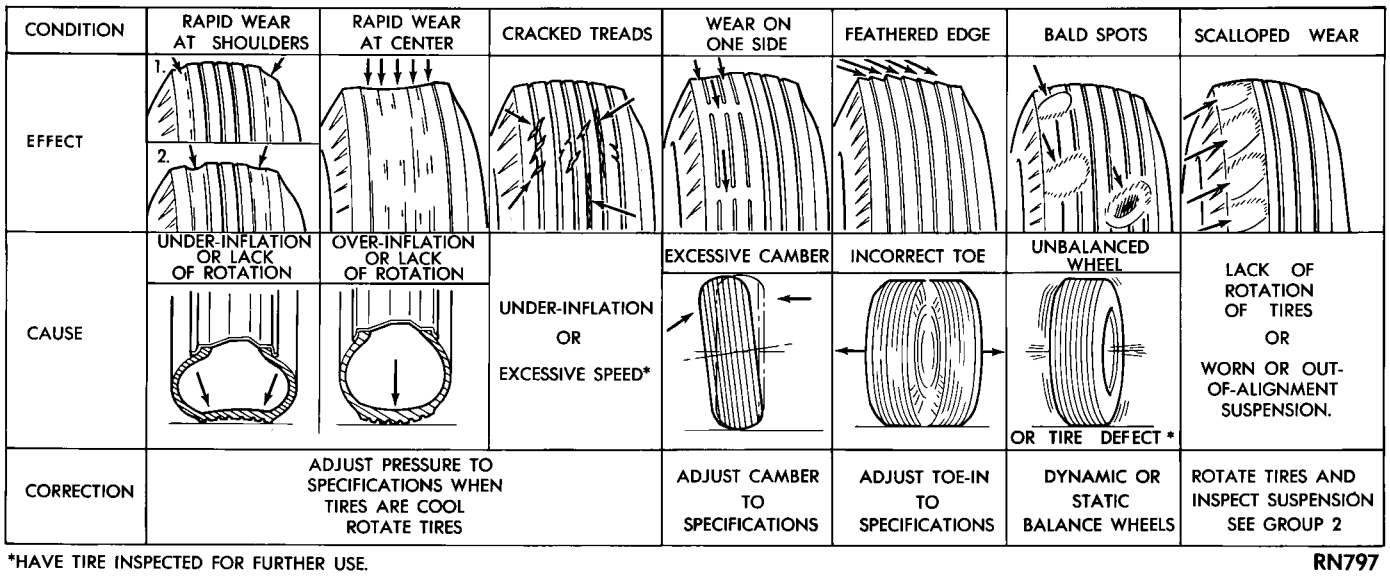

Fig. 15 Tire Wear Patterns

TIRES (Continued)

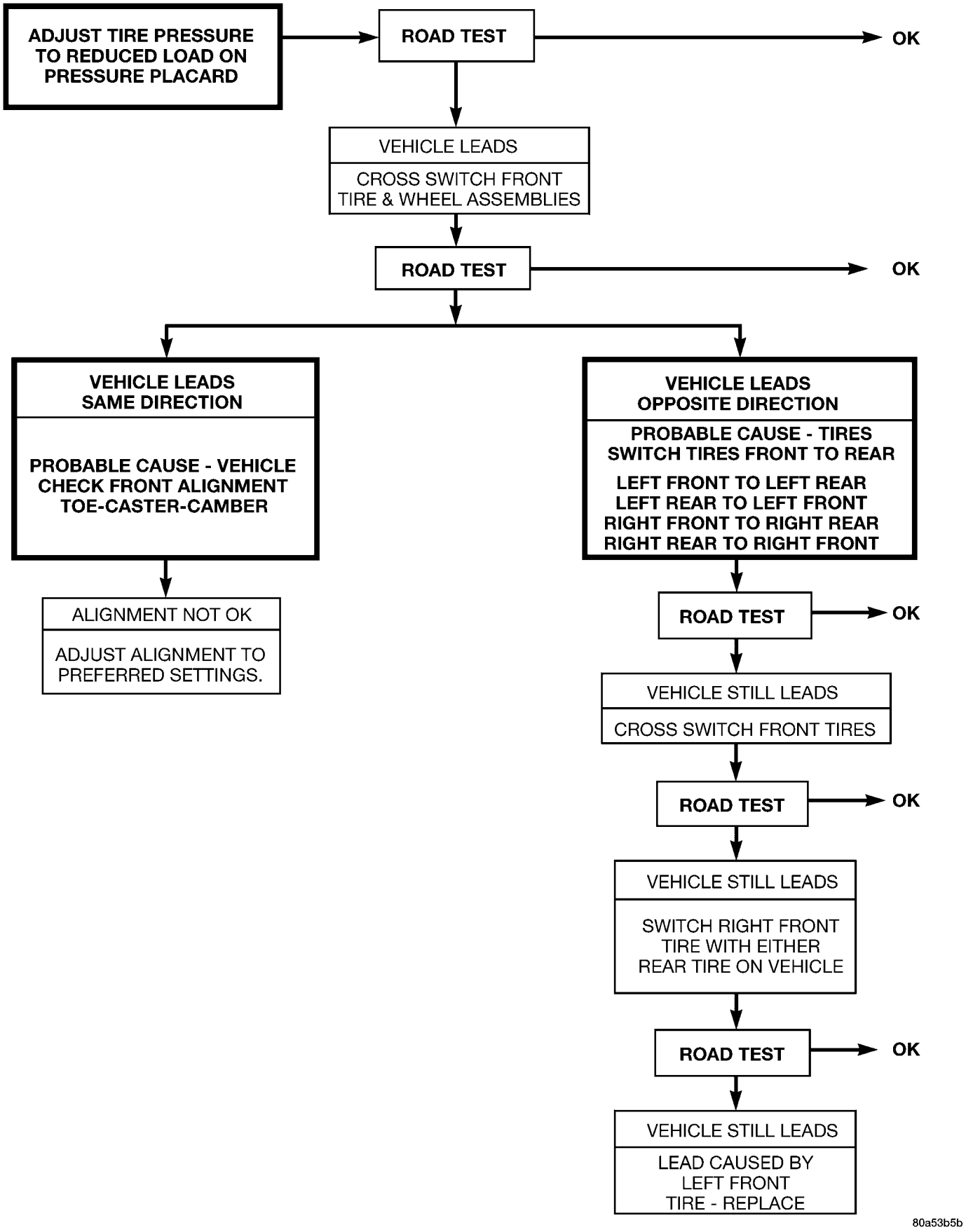

Fig. 16 VEHICLE LEAD DIAGNOSIS AND CORRECTION CHART

TIRES (Continued)

STANDARD PROCEDURE

TIRE REPAIR AREA

For proper repairing, a radial tire must be removed from the wheel. Repairs should only be made if the defect, or puncture, is in the tread area (Fig. 17). The tire should be replaced if the puncture is located in the sidewall.

Deflate tire completely before removing the tire from the wheel. Use lubrication such as a mild soap solution when dismounting or mounting tire. Use tools free of burrs or sharp edges which could damage the tire or wheel rim.

Before mounting tire on wheel, make sure all rust is removed from the rim bead and repaint if necessary.

Install wheel on vehicle, and tighten to proper torque specification.

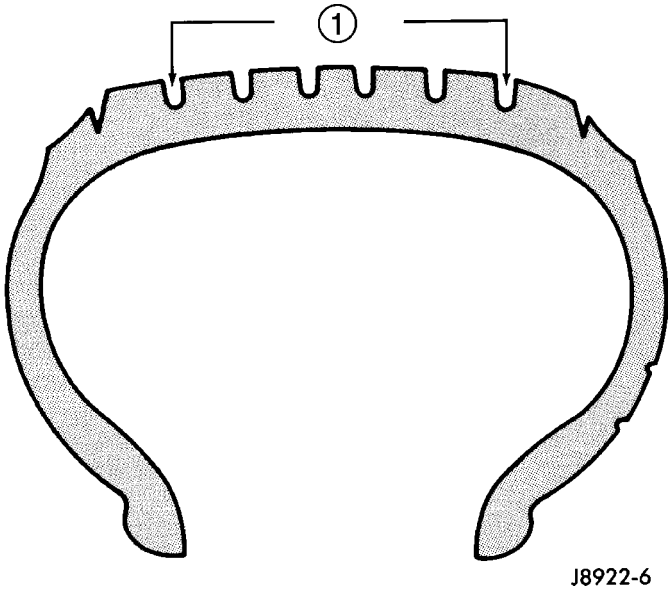

Fig. 17 Tire Repair Area

1 - REPAIRABLE AREA

CLEANING

TIRES

Remove the protective coating on the tires before delivery of a vehicle. This coating may cause deterioration of the tires.

To remove the protective coating, apply warm water and let it soak for a few minutes. Afterwards, scrub the coating away with a soft bristle brush. Steam cleaning may also be used to remove the coating.

NOTE: DO NOT use gasoline, mineral oil, oil-based solvent or a wire brush for cleaning.

SPECIFICATIONS

TIRE SIZE CHART

SPECIFICATIONS

DESCRIPTION	SPECIFICATION
Tire	P215/75R16
Tire	P225/75R16
Tire	P235/70R16
Tire	P235/65R17
Spare Tire BUX & MEXICO	P215/75D16 POLYSPARE ONLY ON 16″

SPARE TIRE CARRIER

REMOVAL

(1) Raise the license plate. (Cherokee model)

(2) Remove the two bolts securing the wheel cover to the wheel. (Cherokee model)

(3) Remove the two lug nuts and the one wheel lock (if equipped) securing the tire/wheel to the spare tire carrier.

(4) Remove the spare tire.

INSTALLATION

(1) Install the spare tire onto the studs on the carrier.

(2) Install the two lug nuts and one wheel lock (if equipped). Tighten the nuts to 115 N·m (85 ft.lbs.)

(3) Close the plastic wheel cover and install the two mounting bolts. Tighten the nuts to 115 N·m (85 ft.lbs.) (Cherokee model)

(4) Close the license plate to cover the bolts and latch. (Cherokee model)

WHEELS

DESCRIPTION

WHEEL DESIGN

The rim size is on the vehicle safety certification label located on the drivers door shut face. The size of the rim is determined by the drivetrain package. Original equipment wheels/rims are designed for operation up to the specified maximum vehicle capacity.

All models use stamped steel, cast aluminum or forged aluminum wheels. Every wheel has raised sections between the rim flanges and rim drop well called safety humps (Fig. 18).

WHEELS (Continued)

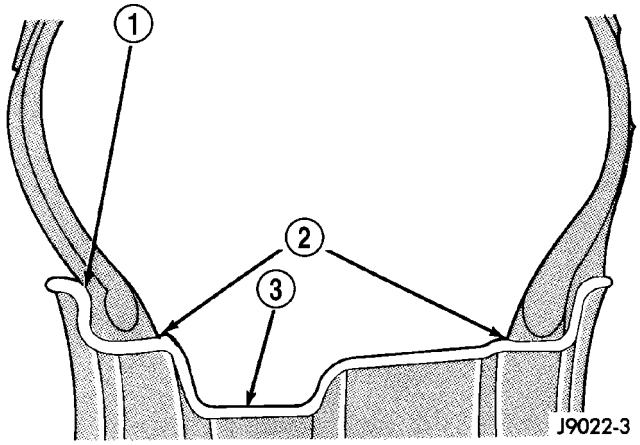

Fig. 18 Safety Rim

1 - FLANGE
2 - RIDGE
3 - WELL

Initial inflation of the tire forces the bead over these raised sections. In case of rapid loss of air pressure, the raised sections help hold the tire on the wheel.

The wheel studs and nuts are designed for specific applications. All aluminum and some steel wheels have wheel stud nuts with an enlarged nose. This enlarged nose is necessary to ensure proper retention of the wheels. Do not use replacement studs or nuts with a different design or lesser quality.

DIAGNOSIS AND TESTING

WHEEL INSPECTION

Inspect wheels for:

- Excessive run out
- Dents or cracks
- Damaged wheel lug nut holes
- Air Leaks from any area or surface of the rim

NOTE: Do not attempt to repair a wheel by hammering, heating or welding.

If a wheel is damaged an original equipment replacement wheel should be used. When obtaining replacement wheels, they should be equivalent in load carrying capacity. The diameter, width, offset, pilot hole and bolt circle of the wheel should be the same as the original wheel.

WARNING: FAILURE TO USE EQUIVALENT REPLACEMENT WHEELS MAY ADVERSELY AFFECT THE SAFETY AND HANDLING OF THE VEHICLE. USED WHEELS ARE NOT RECOMMENDED. THE SERVICE HISTORY OF THE WHEEL MAY HAVE INCLUDED SEVERE TREATMENT OR VERY HIGH MILEAGE. THE RIM COULD FAIL WITHOUT WARNING.

STANDARD PROCEDURE

WHEEL INSTALLATION

The wheel studs and nuts are designed for specific applications. They must be replaced with equivalent parts. Do not use replacement parts of lesser quality or a substitute design. All aluminum and some steel wheels have wheel stud nuts which feature an enlarged nose. This enlarged nose is necessary to ensure proper retention of the aluminum wheels.

NOTE: Do not use chrome plated lug nuts with chrome plated wheels.

Before installing the wheel, be sure to remove any build up of corrosion on the wheel mounting surfaces. Ensure wheels are installed with good metal-to-metal contact. Improper installation could cause loosening of wheel nuts. This could affect the safety and handling of your vehicle.

To install the wheel, first position it properly on the mounting surface. All wheel nuts should then be tightened just snug. Gradually tighten them in sequence to the proper torque specification (Fig. 19). **Never use oil or grease on studs or nuts.**

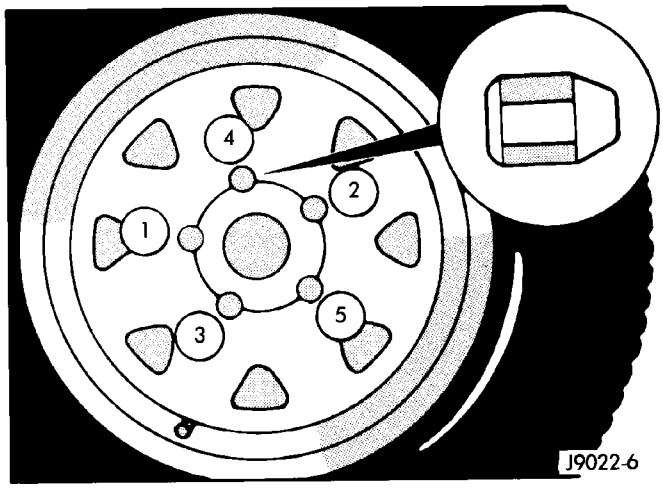

Fig. 19 Lug Nut Tightening Pattern

WHEEL REPLACEMENT

The wheel studs and nuts are designed for specific applications. They must be replaced with equivalent parts. Do not use replacement parts of lesser quality or a substitute design. All aluminum and some steel wheels have wheel stud nuts which feature an enlarged nose. This enlarged nose is necessary to ensure proper retention of the aluminum wheels.

WHEELS (Continued)

NOTE: Do not use chrome plated lug nuts with chrome plated wheels.

Before installing the wheel, be sure to remove any build up of corrosion on the wheel mounting surfaces. Ensure wheels are installed with good metal-to-metal contact. Improper installation could cause loosening of wheel nuts. This could affect the safety and handling of your vehicle.

To install the wheel, first position it properly on the mounting surface. All wheel nuts should then be tightened just snug. Gradually tighten them in sequence to the proper torque specification. **Never use oil or grease on studs or nuts.**

Wheels must be replaced if they have:

- Excessive runout
- Bent or dented
- Leak air through welds
- Have damaged bolt holes

Wheel repairs employing hammering, heating, or welding are not allowed.

Original equipment wheels are available through your dealer. Replacement wheels from any other source should be equivalent in:

- Load carrying capacity
- Diameter
- Pilot Bore Diameter
- Width
- Offset
- Mounting configuration

Failure to use equivalent replacement wheels may affect the safety and handling of your vehicle. Replacement with **used** wheels is not recommended. Their service history may have included severe treatment.

SPECIFICATIONS

CAUTION: DO NOT USE CHROME PLATED LUG NUTS WITH CHROME PLATED WHEELS.

TORQUE SPECIFICATIONS

DESCRIPTION	N·m	Ft. Lbs.	In. Lbs.
Wheel Lug Nut	115 - 155	85 - 115	—

STUDS

REMOVAL

CAUTION: Do not use a hammer to remove wheel studs.

(1) Raise and support vehicle.

(2) Remove wheel and tire assembly.

(3) Remove brake caliper, caliper adapter and rotor, (Refer to 5 - BRAKES/HYDRAULIC/MECHANICAL/DISC BRAKE CALIPERS - REMOVAL).

(4) Remove stud from hub with Remover C-4150A (Fig. 20).

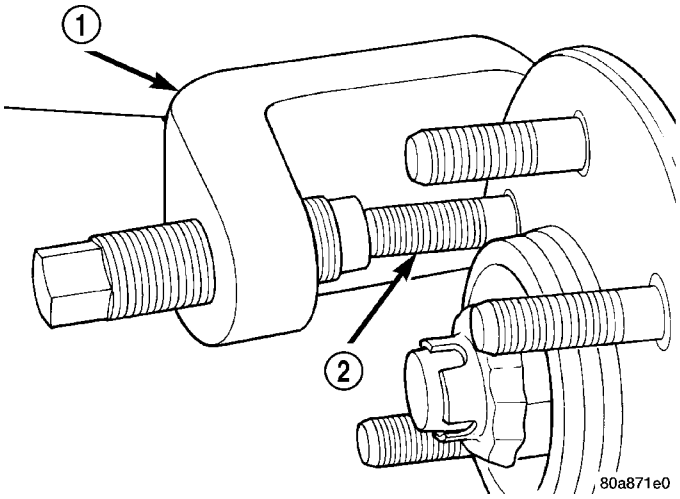

Fig. 20 Wheel Stud Removal

1 - REMOVER
2 - WHEEL STUD

INSTALLATION

CAUTION: Do not use a hammer to remove wheel studs.

(1) Install new stud into hub flange.

(2) Install three washers onto stud, then install lug nut with the flat side of the nut against the washers.

(3) Tighten lug nut until the stud is pulled into the hub flange. Verify that the stud is properly seated into the flange.

(4) Remove lug nut and washers.

(5) Install the brake rotor, caliper adapter, and caliper, (Refer to 5 - BRAKES/HYDRAULIC/MECHANICAL/ROTORS - INSTALLATION).

STUDS (Continued)

(6) Install wheel and tire assembly (Refer to 22 - TIRES/WHEELS/WHEELS - STANDARD PROCEDURE), use new lug nut on stud or studs that were replaced.

(7) Remove support and lower vehicle.

TIRE PRESSURE MONITORING SYSTEM

DESCRIPTION

BASE TIRE PRESSURE MONITORING

This system will consist of tire pressure monitoring sensors attached to each wheel through the valve stem mounting hole, a central receiver module (WCM) and a amber colored indicator lamp. A sensor shall be installed in the spare wheel if the vehicle is equipped with a matching full size spare wheel and tire assembly.

PREMIUM TIRE PRESSURE MONITORING

The system will consist of tire pressure monitoring sensors attached to each wheel through the valve stem mounting hole, a wireless control module (WCM), Three Wheel Sensor transponders are mounted in the wheel wells (2 in the front and 1 in the rear wheel wells). a re-configurable dot matrix display module and an amber colored ISO standard Indicator Lamp. A sensor shall be installed in the spare wheel if the vehicle is equipped with a matching full size spare wheel and tire assembly.

WIRELESS CONTROL MODULE (WCM)

The receiver circuit for the TPM system is integrated into the WCM. The WCM also includes the Remote Keyless Entry (RKE) receiver and the Sentry Key Immobilizer (SKIM) receiver. All three receivers share a number or common components. The WCM decodes the RF signals transmitted by each of the vehicle's tire pressure sensors. The decoded information is used to determine if ″warning″ or ″fault″ conditions exist within the TPM system.

The WCM communicates with the module that controls the ″ISO Indicator Lamp″ via the vehicle bus system (CAN B or J1850).

Upon detection of a warning or fault condition, the WCM will send a request to illuminate the Indicator Lamp. Also, upon detection of a warning or fault condition, the display module will send a request to sound the ″chime″. A chime will only be requested once per ignition cycle per warning or fault condition detected.

The WCM will store all warning and fault conditions, placard pressure values, low-pressure threshold values and low pressure threshold hysterisis values in memory that can be accessed through diagnostic communication. If new sensors are introduced to the vehicle, the data stored for the sensor being replaced will be deleted.

The WCM will store all wheel sensor and transponder ID's and locations and faults in memory that can be accessed through diagnostic communication. All other data values transmitted from each wheel sensor shall be stored in the WCM memory.

OPERATION

BASE TIRE PRESSURE MONITORING

The tire pressure monitoring system is designed to operate without loss of function for all types of standard tire constructions. (Function with different types of run flat tire constructions needs to be evaluated for each design). The wheel sensor shall monitor tire pressure, air temperature inside the tire, wheel acceleration and the sensor internal battery status for all four active road tires. The sensor will broadcast this information, along with a unique 32 bit ID, to a central receiver circuit located inside the WCM. The information received by the WCM will be decoded and stored in memory (RAM) in the WCM. If a ″warning or ″fault″ condition exists, the WCM will send a bus message request to illuminate the amber colored indicator lamp.

If the WCM detects a warning or fault condition at ignition key ″on″ it will wait ten seconds +/- 10 % before sending the first request to illuminate the Indicator Lamp. This will assure that the display module has concluded its bulb check period. The display module will request a chime once per ignition cycle for each ″warning″ or ″fault″ condition detected. A ″warning″ or ″fault″ condition will remain enabled until the problem causing the condition is corrected and removed/reset.

The WCM shall continuously monitor for the receipt of tire pressure RF message transmissions from the wheel sensors during both the ignition key ″on″ and key ″off″ cycles. The wheel sensor ID's and the location of each sensor (e.g. Tire 1, Tire 2 etc.) are stored in the WCM non-volatile memory during the initial Manufacturing Plant Process, or during a service procedure, as required. The recommended ″placard pressure″ and the ″low-pressure threshold″ for the tires installed on the vehicle, are stored in the WCM non-volatile memory during the initial Manufacturing Plant Process, and in the TPM assembly process standard, or during a service procedure, as required. (Note: If more than one placard value is recommended for the vehicle to handle a wide variation in vehicle load requirements, either an automatic (adaptive) means to set the low-pressure

TIRE PRESSURE MONITORING SYSTEM (Continued)

threshold or a customer selectable means to set the low-pressure threshold will be provided. For vehicles with optional wheel/tire sizes and significantly different tire placard pressures, the placard pressure value and the low-pressure threshold value shall be re-programmable by the dealer to accommodate the customer selected wheel/tire combinations recommended by DaimlerChrysler).

PREMIUM TIRE PRESSURE MONITORING

The tire pressure monitoring system is designed to operate without loss of function for all types of standard tire constructions. (Function with different types of run flat tire constructions needs to be evaluated for each design). The wheel sensor shall monitor tire pressure, air temperature inside the tire, wheel acceleration and the sensor internal battery status for all four active road tires and the spare tire, if so equipped. The sensor will broadcast this information, along with a unique 32 bit ID, to a central receiver circuit located inside the WCM. The information received by the WCM will be decoded and stored in (RAM) memory in the WCM. The WCM will send bus messages to the re-configurable display module to display the pressures of the four active road tires in vehicle position. The spare tire pressure is monitored but it is not displayed.

If a ″warning″ or ″fault″ condition exists, the WCM will send a bus message request to display the text messages and, when required, illuminate the amber colored ISO Indicator Lamp. ″Warnings″ and ″faults″ are described in more detail below. If the WCM detects a warning or fault condition at ignition key ″on″ it will wait ten seconds +/- 10% before sending the first request to illuminate the Indicator Lamp and to display the text messages. This will assure that the display module has concluded its bulb check period. The display module will request a chime once per ignition cycle for each ″warning″ or ″fault″ condition detected. A ″warning″ or ″fault″ condition will remain enabled until the problem causing the condition is corrected and removed/reset

The WCM shall continuously monitor for the receipt of tire pressure RF message transmissions from the wheel sensors during both the ignition key ″on″ and key ″off″ cycles. The wheel sensor ID's and the location of each sensor (e.g. Left Front, Right Front etc.) are stored in the WCM non-volatile memory during the initial Manufacturing Plant Process, or during a service procedure, as required. The recommended ″placard pressure″ and the ″low-pressure threshold″ for the tires installed on the vehicle, are stored in the WCM non-volatile memory during the initial Manufacturing Plant Process, as described later in this document and in the TPM assembly process standard, or during a service procedure as required. (Note: If more than one placard value is recommended for the vehicle to handle a wide variation in vehicle load requirements, either an automatic (adaptive) means to set the low-pressure threshold or a customer selectable (reset switch) means to set the low-pressure threshold will be provided. For vehicles with optional wheel/tire sizes and significantly different tire placard pressures, the placard pressure value and the low-pressure threshold value shall be re-programmable by the dealer to accommodate the customer selected wheel/tire combinations recommended by DaimlerChrysler).

DIAGNOSIS AND TESTING - TIRE PRESSURE MONITORING SYSTEM

All Tire Pressure Monitoring System Faults are specific to one location. If a ″BATTERY LOW″ or ″SENSOR FAILURE″ fault is detected, the location will be displayed. The appropriate sensor/transmitter can then be replaced. If a single sensor/transmitter cannot be detected by the EVIC, replace that sensor transmitter. If none of the sensors/transmitters can be detected, refer to symptoms in the EVIC section. For additional system description and diagnosis, refer to Tire Pressure Monitoring in the Body Diagnostic manual.

SPECIFICATIONS

TORQUE CHART

TORQUE SPECIFICATIONS

DESCRIPTION	N·m	Ft. Lbs.	In. Lbs.
Tire Pressure Sensor/ Transmitter Mounting Nut	6.5	—	58

SENSOR

DESCRIPTION

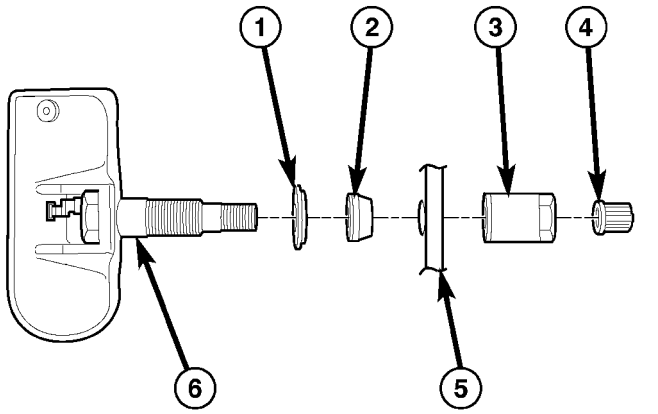

Fig. 21 Sensor Mounting - Exploded View

1 - METAL WASHER
2 - SEAL
3 - NUT (WITH PRESSED-IN WASHER)
4 - CAP (WITH SEAL)
5 - SECTIONAL CUTAWAY OF WHEEL
6 - TPM SENSOR

On vehicles equipped with Tire Pressure Monitoring (TPM), one tire pressure sensor (6) is mounted to each wheel (5) in place of the traditional tire valve stem. Each sensor has an internal battery that lasts up to 10 years. The battery is not serviceable. At the time of battery failure, the sensor must be replaced (Fig. 21).

The TPM system operates on a 315 MHz radio frequency. The 315 MHz sensors can be easily identified by a white outline oval (black center) insignia (3) on the sensor body (Fig. 22).

The Export TPM system operates on a 434 MHz radio frequency. The 434 MHz sensors can be easily identified by a solid white oval insignia (3) on the body (Fig. 23).

CAUTION: Although 315 MHz and 434 MHz sensors are identical in size and shape, they are not interchangeable. Always make sure the correct sensor is being used.

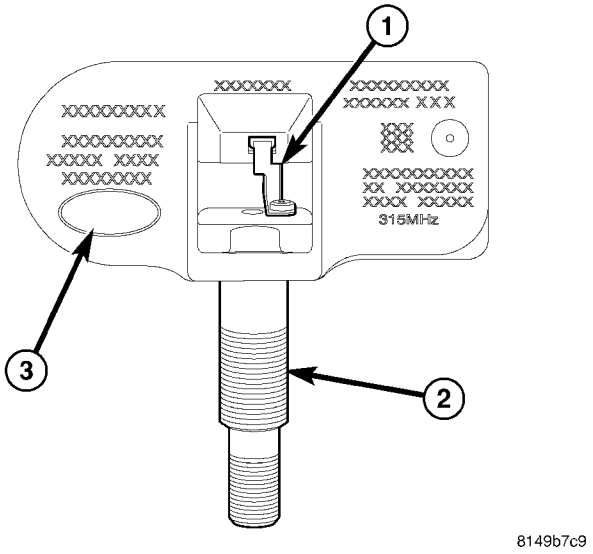

Fig. 22 Tire Pressure Sensor

1 - ANTENNA STRAP
2 - VALVE STEM
3 - IDENTIFICATION INSIGNIA

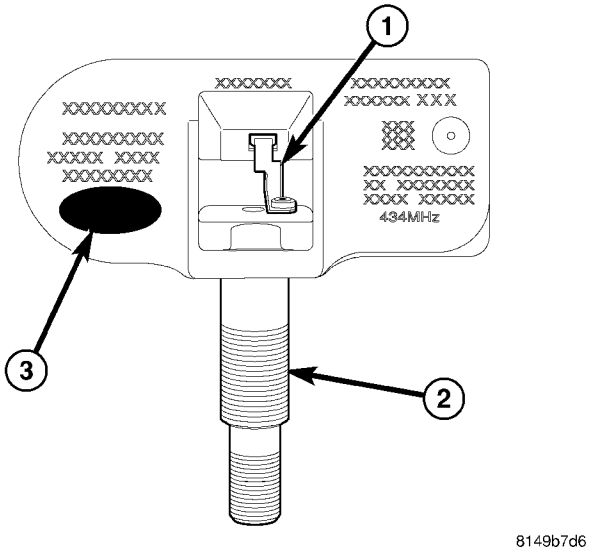

Fig. 23 Tire Pressure Sensor - Export

1 - ANTENNA STRAP
2 - VALVE STEM
3 - IDENTIFICATION INSIGNIA

SENSOR (Continued)

The TPM sensors are designed for original style factory wheels. **Do not attempt to install a tire pressure sensor in an aftermarket wheel.**

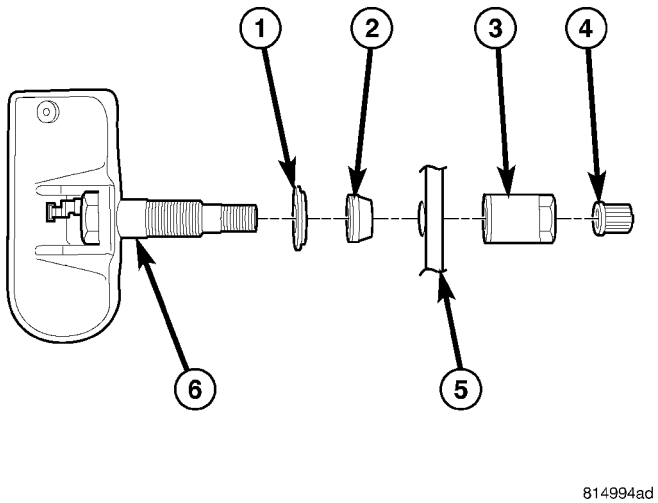

Fig. 24 Sensor Mounting - Exploded View

1 - METAL WASHER
2 - SEAL
3 - NUT (WITH PRESSED-IN WASHER)
4 - CAP (WITH SEAL)
5 - SECTIONAL CUTAWAY OF WHEEL
6 - TPM SENSOR

The serviceable components of the tire pressure sensor are (Fig. 24):

- Sensor-To-Wheel Seal (2) and Metal Washer (1)
- Valve Stem Cap (4)
- Valve Stem Core
- Valve Stem Nut (with pressed-in washer) (3)

The valve stem caps and cores used are specifically designed for the tire pressure monitoring sensors. Although similar to standard valve stem caps and cores, they are different. The valve stem cap has a special seal inside to keep moisture and corrosion out. The valve stem core has a special nickel coating to protect from corrosion.

OPERATION

The battery operated tire pressure sensors lay dormant (Park Mode), then wake and start transmitting (Drive Mode) when the vehicle first reaches speeds over 20 mph (32 km/h). Once the wheels stop rotating for a period of approximately 20 minutes, the sensors shut down until again awaken. Although not transmitting as when in Drive Mode, while in Park Mode, the sensors still transmit approximately once every 13 hours to let the receiver know air pressure status at that time.

Using an RF signal, each sensor transmits tire pressure data approximately once every minute. Each sensor's (transmitter) broadcast is uniquely coded so that the wireless control module (WCM) can monitor the state of each of the sensors on the four rotating road wheels. The WCM (located in the SKREEM) automatically learns and stores the sensor's ID while driving after a sensor has been replaced. **There is no formal retraining procedure necessary.**

For additional information, refer to appropriate diagnostic information.

CAUTION

CAUTION: The use of tire sealants is strictly prohibited for vehicles equipped with the Tire Pressure Monitoring system. Tire sealants can clog tire pressure sensors.

CAUTION: Tire pressure sensor valve stem caps and cores are specially designed for the sensors. Due to risk of corrosion, do not use a standard valve stem cap or core in a tire pressure sensor in place of the original equipment style sensor cap and core.

CAUTION: Do not attempt to install a tire pressure sensor in an aftermarket wheel. Use tire pressure sensors in original style factory wheels only.

CAUTION: Any time a sensor is to be installed in a wheel, a new seal and washer must be installed on the stem to ensure air tight sealing.

NOTE: TPM thresholds have been established for the original tire size equipped on the vehicle. Use original size tires only to maintain system accuracy.

DIAGNOSIS AND TESTING

TIRE PRESSURE SENSOR

NOTE: Tire pressure may increase from 2 to 6 psi (14 to 41 kPa) during normal driving conditions. Do NOT reduce this normal pressure build up.

When diagnosing a tire pressure issue, always check air pressure in the tires first with a known accurate air gauge. Adjust air pressure as necessary to that listed on the Tire Inflation Pressure Label (Placard) provided with the vehicle (usually applied to the driver's side B-pillar). After adjusting air pres-

SENSOR (Continued)

sure in a tire, allow approximately two minutes for the message or indicator lamp to go out.

Check the tire pressure indicator lamp in the instrument cluster. If the lamp is illuminating continuously, proceed as listed below. If the indicator lamp is flashing on/off three times, once every ten minutes, there is a system fault detected. Refer to the appropriate diagnostic information.

If air pressure in any tire is low, inspect **all** the tires for leaks. A water "dunk tank" or other water test may be used to check for a leak around the sensor as long as any water at the valve core is removed once the procedure is completed. The water can be easily expelled from the core area by pushing in on the core for several seconds, allowing escaping air to drive out any moisture. Reinflate the tire as necessary. Always make sure the original valve stem cap is securely installed to keep moisture out of the sensor.

If the gauge-read pressure in the tires does not indicate a tire pressure issue, refer to the appropriate diagnostic information.

REMOVAL

(1) Raise and support vehicle. (Refer to LUBRICATION & MAINTENANCE/HOISTING - STANDARD PROCEDURE)

(2) Remove the tire and wheel assembly. (Refer to 22 - TIRES/WHEELS - REMOVAL)

CAUTION: The cap used on this valve stem contains an O-ring seal to prevent contamination and moisture from entering the valve stem. Retain this valve stem cap for reuse. Do not substitute a regular valve stem cap in its place.

CAUTION: The valve stem used on this vehicle is made of aluminum and the core is nickel plated brass. The original valve stem core must be reinstalled and not substituted with a valve stem core made of a different material. This is required to prevent corrosion in the valve stem caused by the different metals.

(3) Dismount tire from wheel following tire changer manufacturers instructions while paying special attention to the following to avoid damaging the pressure sensor:

(a) When breaking the tire bead loose from the wheel rim, avoid using the Bead Breaker in the area of the sensor (Fig. 25). That includes both front and rear beads of the tire.

(b) When preparing to dismount the tire from the wheel, carefully insert the mounting/dismounting tool at the valve stem ± 10°, then proceed to dismount the tire from the wheel. Use this process on both the upper and lower tire beads.

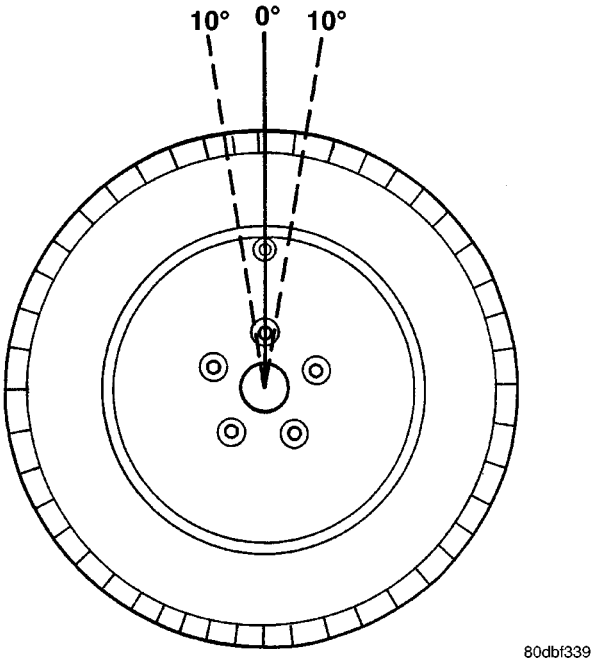

Fig. 25 Start Mount/Dismount Tool Within 10 Degrees Of Valve Stem

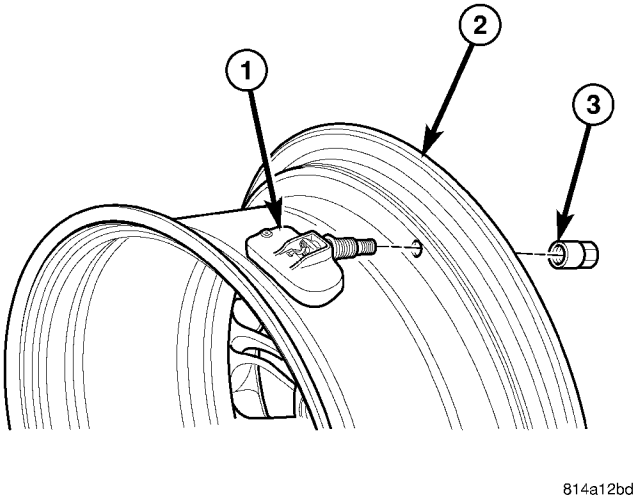

Fig. 26 Sensor Mounting To Wheel

(4) Remove sensor nut (3) retaining sensor to wheel. While removing nut, hold pressure against rear of metal valve stem (See Arrow) to keep valve stem from pushing rearward, damaging antenna strap (Fig. 26).

(5) Remove sensor (1) from wheel (2) (Fig. 26).

SENSOR (Continued)

INSTALLATION

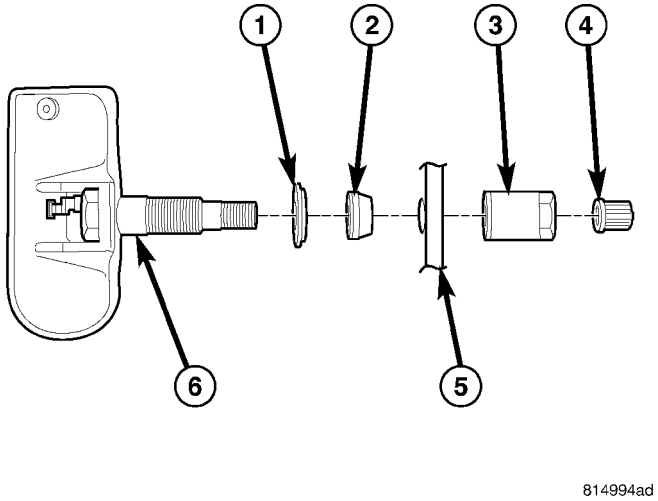

Fig. 27 Sensor Mounting - Exploded View

1 - METAL WASHER
2 - SEAL
3 - NUT (WITH PRESSED-IN WASHER)
4 - CAP (WITH SEAL)
5 - SECTIONAL CUTAWAY OF WHEEL
6 - TPM SENSOR

NOTE: Before reinstalling an existing tire pressure sensor, replace seal (2) and metal washer (1) at base of sensor valve stem (6) to ensure proper sealing (Fig. 27).

(1) Wipe area clean around sensor/valve stem mounting hole in wheel (5). Make sure surface of wheel is not damaged.

CAUTION: To avoid damaging sensor antenna strap (1), hold pressure against rear of metal valve stem (2) while sensor is inserted through wheel mounting hole and nut is installed (Fig. 28).

(2) Insert sensor (1) through wheel (2) as shown keeping pressure against rear of metal valve stem (See Arrow). Potted side of sensor is to be positioned toward wheel. Do not attempt to mount sensor otherwise, damage may occur (Fig. 29).

(3) Install sensor nut (with pressed-in washer) (3) by hand (Fig. 29).

NOTE: Before tightening sensor nut, push downward on sensor housing (2) in an attempt to make it flush with interior contour of wheel (1) (Fig. 30).

(4) While holding sensor in position, tighten sensor nut to 6.5 N·m (58 in. lbs.) torque.

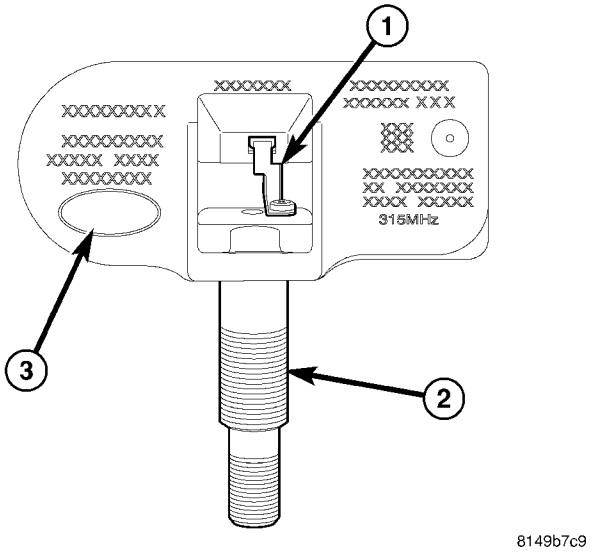

Fig. 28 Tire Pressure Sensor

1 - ANTENNA STRAP
2 - VALVE STEM
3 - IDENTIFICATION INSIGNIA

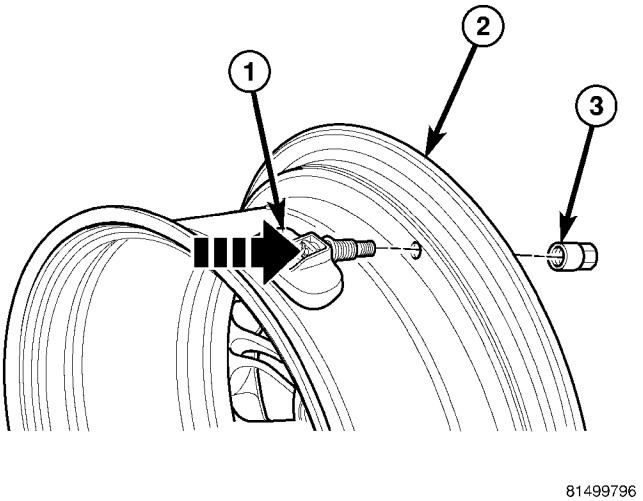

Fig. 29 Sensor Installation To Wheel

1 - TIRE PRESSURE SENSOR
2 - WHEEL
3 - NUT (WITH WASHER)

CAUTION: Over-torquing the sensor nut by as little as 12 N·m (106 in. lbs.) may result in sensor separation from the valve stem. Under this condition, the sensor may still function, however, the condition should be corrected immediately.

(5) Mount tire on wheel following tire changer manufacturers instructions, paying special attention to the following to avoid damaging tire pressure sensor:

SENSOR (Continued)

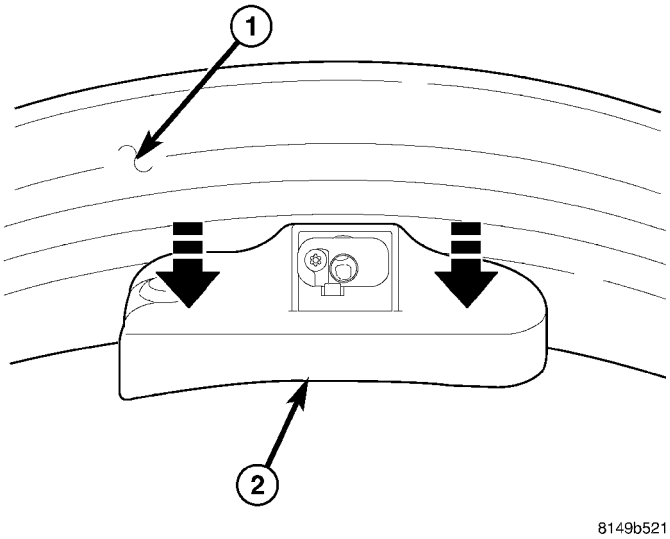

Fig. 30 Seat Sensor Against Wheel Interior

1 - WHEEL INTERIOR
2 - TIRE PRESSURE SENSOR

(a) Rotating Wheel Tire Changers- Once the

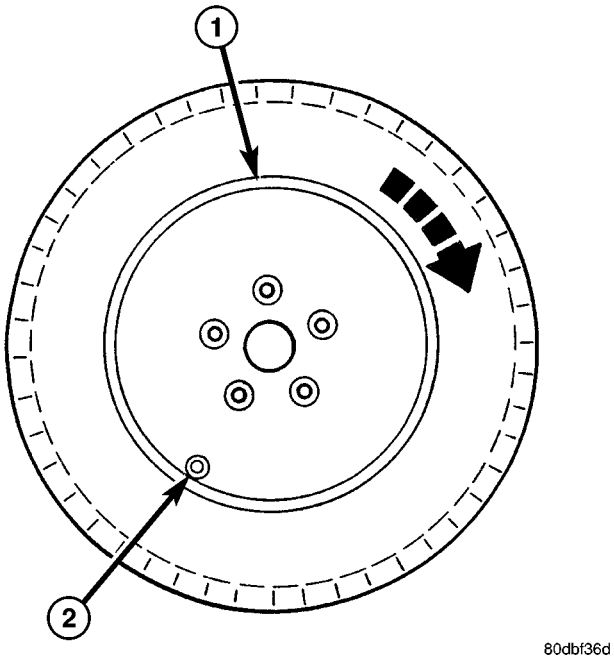

Fig. 31 Mounting Tire Using Rotating Wheel Machine

1 - HEAD OF CHANGER LOCATED HERE
2 - VALVE STEM

wheel is mounted to the changer, position the sensor valve stem (2) approximately 210° from the head of the changer (located at 1) in a clockwise direction before rotating the wheel (also in a clockwise direction) to mount the tire. Use this procedure on both the upper and lower tire beads (Fig. 31).

(b) Rotating Tool Tire Changers - Position the

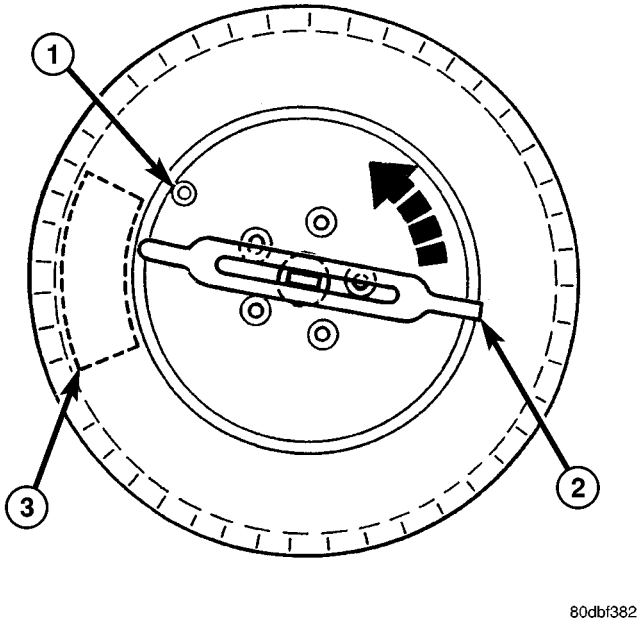

Fig. 32 Mounting Tire Using Rotating Tool Machine

1 - VALVE STEM
2 - INSTALLATION END OF MOUNTING/DISMOUNTING TOOL
3 - BEAD BREAKER (KEEP CLEAR OF SENSOR)

wheel on the changer so that the sensor valve stem (1) is located approximately 210° clockwise from the installation end of the mounting/dismounting tool (2) once the tool is mounted for tire installation. Make sure the sensor is clear of the lower bead breaker area (3) to avoid damaging the sensor when the breaker rises. Rotate the tool (2) in a counterclockwise direction to mount the tire. Use this procedure on both the upper and lower tire beads (Fig. 32).

(6) Adjust air pressure to that listed on Tire Inflation Pressure Label (Placard) provided with vehicle (usually applied to driver's side B-pillar). Make sure **original style** valve stem cap is securely installed to keep moisture out of sensor.

(7) Install tire and wheel assembly on vehicle (Refer to 22 - TIRES/WHEELS - INSTALLATION).

(8) Lower vehicle.

(9) Drive vehicle for a minimum of five minutes while maintaining a continuous speed above 20 mph (32 km/h). During this time the system will learn the new sensor ID code and will clear any DTC's automatically.

NOTE: If a sensor cannot be trained, refer to appropriate diagnostic information.

TRANSPONDER

DESCRIPTION

A transponder is located in three of the four wheel wells of the vehicle to provide the SKREEM with the location of the tire pressure sensors on the vehicle. The transponders are located in the left front, right front and right rear wheel wells. A fourth sensor is not necessary in the remaining wheel well due to the process-of-elimination theory. Once the system knows the location of the first three sensors it assumes the location of the fourth tire pressure sensor is in the left rear tire.

OPERATION

Transponders located in three of the four wheel wells of the vehicle to provide the Wireless Control Module (WCM) located in the Sentry Key Remote Entry Module (SRKEEM) with the location of the tire pressure sensors on the vehicle. The transponders are located in the left front, right front and right rear wheel wells. A fourth sensor is not necessary in the remaining wheel well due to the process-of-elimination theory. Once the system knows the location of the first three sensors it assumes the location of the fourth tire pressure sensor is in the left rear tire.

REMOVAL

FRONT TRANSPONDER

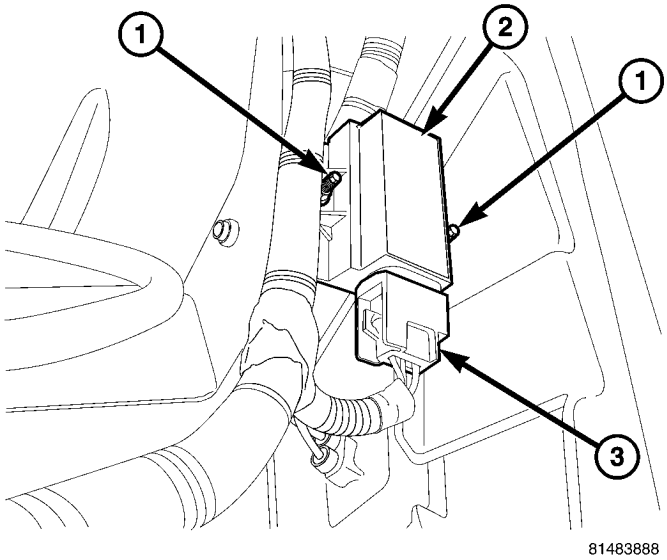

Fig. 33 FRONT TRANSPONDER

1 - NUTS
2 - TRANSPONDER
3 - ELECTRICAL CONNECTOR

(1) Raise and support the vehicle.

(2) Remove the front part wheel well housing cover and pull it back toward the tire to gain access to the transponder.

(3) Remove the mounting nuts (1) for the transponder (2) from the mounting bracket. (Fig. 33).

(4) Disconnect the electrical connector (3) and remove the transponder (2) from the vehicle (Fig. 33).

REAR TRANSPONDER

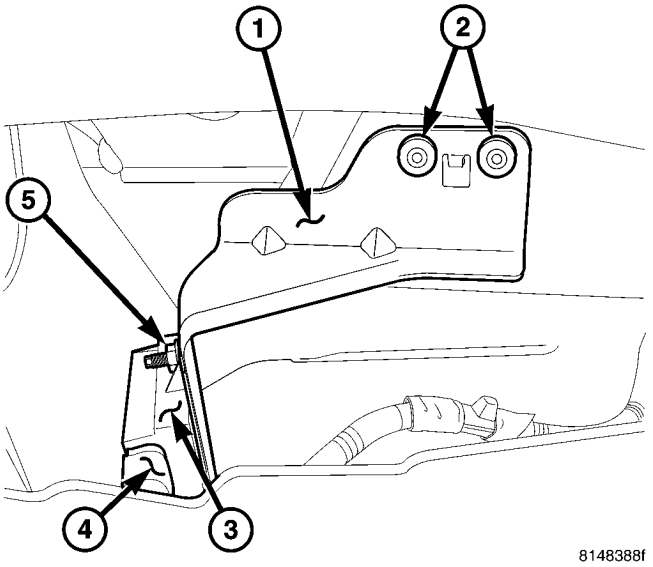

Fig. 34 REAR TRANSPONDER

1 - BRACKET
2 - RIVETS
3 - TRANSPONDER
4 - ELECTRICAL CONNECTOR
5 - MOUNTING NUT

(1) Raise and support the vehicle.

(2) Drill out the rivets (2) for the transponder mounting bracket (1) (Fig. 34).

(3) Disconnect the electrical connector (3) (Fig. 34).

(4) Pull the transponder (1) with the bracket down and remove the mounting nuts (2) for the transponder (1) (Fig. 35).

(5) Remove the transponder (1) from the bracket (3) (Fig. 35).

TRANSPONDER (Continued)

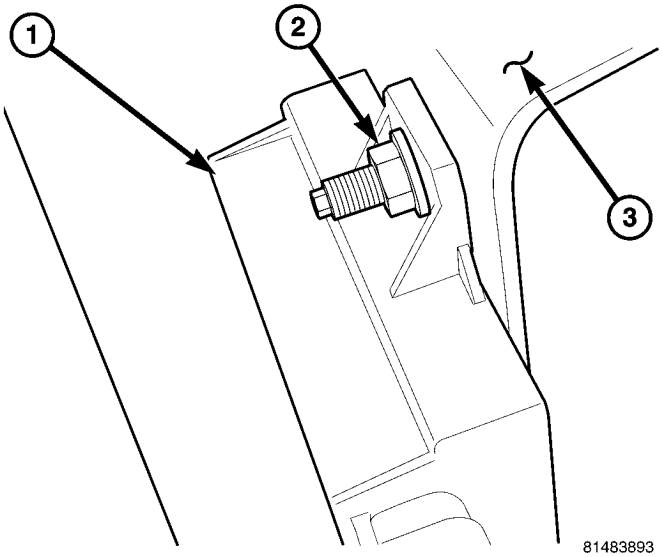

Fig. 35 MOUNTING NUTS

1 - TRANSPONDER
2 - NUTS
3 - BRACKET

INSTALLATION

FRONT TRANSPONDER

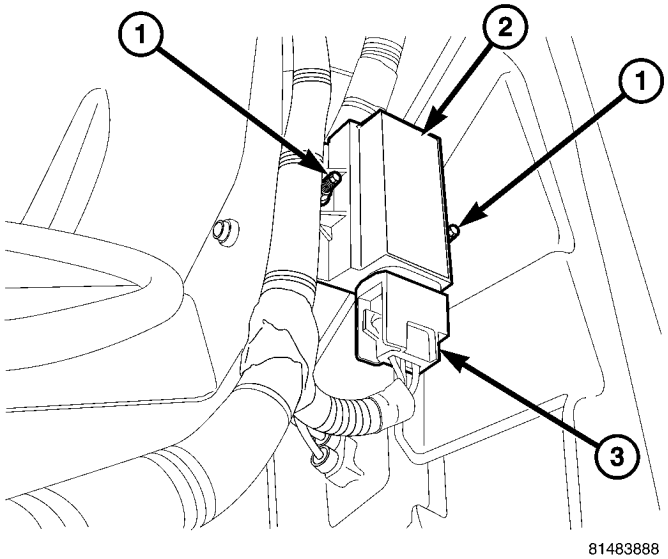

Fig. 36 FRONT TRANSPONDER

1 - NUTS
2 - TRANSPONDER
3 - ELECTRICAL CONNECTOR

(1) Reconnect the electrical connector (3) to the transponder (2). (Fig. 36)

(2) Install the transponder (2) to the mounting bracket and install the mounting nuts (1) (Fig. 36).

(3) Install the front part of the wheel well housing cover.

(4) Lower the vehicle.

REAR TRANSPONDER

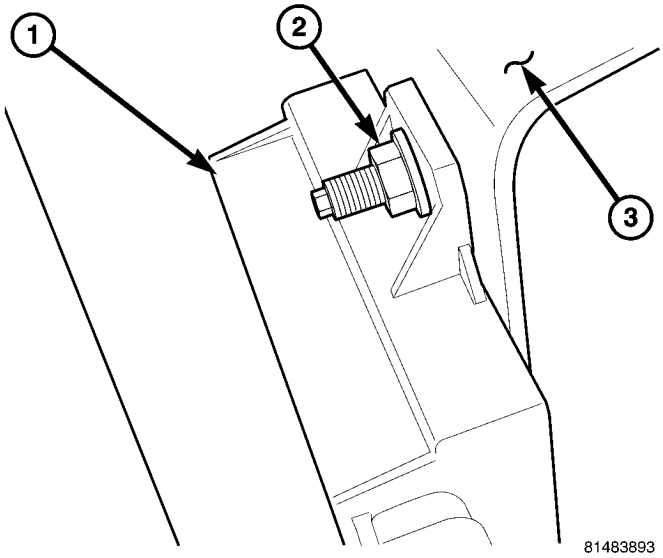

Fig. 37 MOUNTING NUTS

1 - TRANSPONDER
2 - NUTS
3 - BRACKET

(1) Install the transponder (1) to the bracket (3) and install the mounting nuts (2) (Fig. 37).

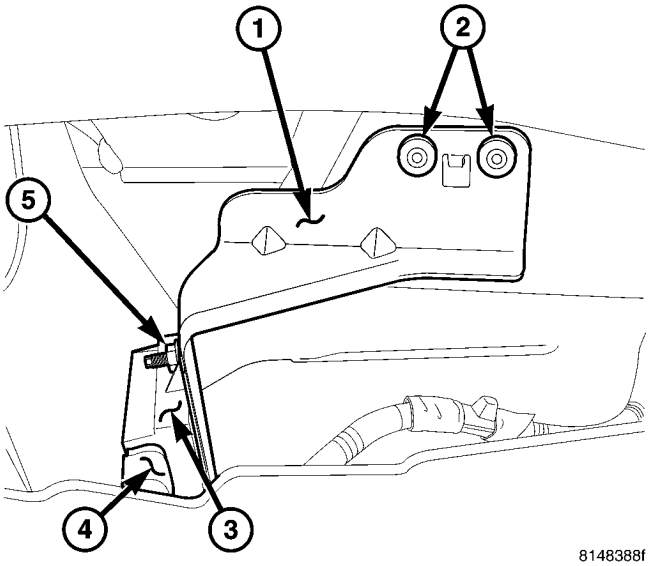

Fig. 38 REAR TRANSPONDER

1 - BRACKET
2 - RIVETS
3 - TRANSPONDER
4 - ELECTRICAL CONNECTOR
5 - MOUNTING NUT

(2) Reconnect the electrical connector (4) to the transponder (3) (Fig. 38).

(3) Install the transponder/bracket assembly (1) to the vehicle and install new rivets (2) (Fig. 38).

(4) Lower the vehicle.

BODY

TABLE OF CONTENTS

page

BODY
WARNING
SAFETY PRECAUTIONS AND WARNINGS . . . 1
DIAGNOSIS AND TESTING
WATER LEAKS 1
WIND NOISE 2
STANDARD PROCEDURE
STANDARD PROCEDURE - BODY LUBRICATION 3
HEAT STAKING 3
STANDARD PROCEDURE - PLASTIC BODY PANEL REPAIR 3
BUZZ, SQUEAK & RATTLE 11
SPECIFICATIONS 13
SPECIAL TOOLS
BODY 14

page

HOOD 15
DOOR - FRONT 18
DOORS - REAR 27
SWING GATE 36
EXTERIOR 47
INSTRUMENT PANEL 59
INTERIOR 70
PAINT 76
SEATS 78
STATIONARY GLASS 97
SUNROOF 100
WEATHERSTRIP/SEALS 111
BODY STRUCTURE 115

BODY

WARNING

SAFETY PRECAUTIONS AND WARNINGS

WARNING: Use an osha approved breathing filter when spraying paint or solvents in a confined area. Personal injury can result.

- **Avoid prolonged skin contact with petroleum or alcohol – based cleaning solvents. Personal injury can result.**
- **Do not stand under a hoisted vehicle that is not properly supported on safety stands. Personal injury can result.**

CAUTION: When holes must be drilled or punched in an inner body panel, verify depth of space to the outer body panel, electrical wiring, or other components. Damage to vehicle can result.

- **Do not weld exterior panels unless combustible material on the interior of vehicle is removed from the repair area. Fire or hazardous conditions, can result.**
- **Always have a fire extinguisher ready for use when welding.**
- **Disconnect the negative (-) cable clamp from the battery when servicing electrical components that are live when the ignition is OFF. Damage to electrical system can result.**
- **Do not use abrasive chemicals or compounds on painted surfaces. Damage to finish can result.**
- **Do not use harsh alkaline based cleaning solvents on painted or upholstered surfaces. Damage to finish or color can result.**
- **Do not hammer or pound on plastic trim panel when servicing interior trim. Plastic panels can break.**

DIAGNOSIS AND TESTING

WATER LEAKS

Water leaks can be caused by poor sealing, improper body component alignment, body seam porosity, missing plugs, or blocked drain holes. Centrifugal and gravitational force can cause water to drip from a location away from the actual leak point, making leak detection difficult. All body sealing points should be water tight in normal wet-driving conditions. Water flowing downward from the front of the vehicle should not enter the passenger or luggage compartment. Moving sealing surfaces will not always seal water tight under all conditions. At times, side glass or door seals will allow water to enter the passenger compartment during high pressure washing or hard driving rain (severe) conditions. Overcompensating on door or glass adjustments to stop a water leak that occurs under severe conditions can cause premature seal wear and excessive closing or latching effort. After completing

a repair, water test vehicle to verify leak has stopped before returning vehicle to use.

VISUAL INSPECTION BEFORE WATER LEAK TESTS

Verify that floor and body plugs are in place, body drains are clear, and body components are properly aligned and sealed. If component alignment or sealing is necessary, refer to the appropriate section of this group for proper procedures.

WATER LEAK TESTS

WARNING: DO NOT USE ELECTRIC SHOP LIGHTS OR TOOLS IN WATER TEST AREA. PERSONAL INJURY CAN RESULT.

When the conditions causing a water leak have been determined, simulate the conditions as closely as possible.

- If a leak occurs with the vehicle parked in a steady light rain, flood the leak area with an open-ended garden hose.
- If a leak occurs while driving at highway speeds in a steady rain, test the leak area with a reasonable velocity stream or fan spray of water. Direct the spray in a direction comparable to actual conditions.
- If a leak occurs when the vehicle is parked on an incline, hoist the end or side of the vehicle to simulate this condition. This method can be used when the leak occurs when the vehicle accelerates, stops or turns. If the leak occurs on acceleration, hoist the front of the vehicle. If the leak occurs when braking, hoist the back of the vehicle. If the leak occurs on left turns, hoist the left side of the vehicle. If the leak occurs on right turns, hoist the right side of the vehicle. For hoisting recommendations (Refer to LUBRICATION & MAINTENANCE/HOISTING - STANDARD PROCEDURE).

WATER LEAK DETECTION

To detect a water leak point-of-entry, do a water test and watch for water tracks or droplets forming on the inside of the vehicle. If necessary, remove interior trim covers or panels to gain visual access to the leak area. If the hose cannot be positioned without being held, have someone help do the water test.

Some water leaks must be tested for a considerable length of time to become apparent. When a leak appears, find the highest point of the water track or drop. The highest point usually will show the point of entry. After leak point has been found, repair the leak and water test to verify that the leak has stopped.

Locating the entry point of water that is leaking into a cavity between panels can be difficult. The trapped water may splash or run from the cavity, often at a distance from the entry point. Most water leaks of this type become apparent after accelerating, stopping, turning, or when on an incline.

MIRROR INSPECTION METHOD

When a leak point area is visually obstructed, use a suitable mirror to gain visual access. A mirror can also be used to deflect light to a limited-access area to assist in locating a leak point.

BRIGHT LIGHT LEAK TEST METHOD

Some water leaks in the luggage compartment can be detected without water testing. Position the vehicle in a brightly lit area. From inside the darkened luggage compartment inspect around seals and body seams. If necessary, have a helper direct a drop light over the suspected leak areas around the luggage compartment. If light is visible through a normally sealed location, water could enter through the opening.

PRESSURIZED LEAK TEST METHOD

When a water leak into the passenger compartment cannot be detected by water testing, pressurize the passenger compartment and soap test exterior of the vehicle. To pressurize the passenger compartment, close all doors and windows, start engine, and set heater control to high blower in HEAT position. If engine can not be started, connect a charger to the battery to ensure adequate voltage to the blower. With interior pressurized, apply dish detergent solution to suspected leak area on the exterior of the vehicle. Apply detergent solution with spray device or soft bristle brush. If soap bubbles occur at a body seam, joint, seal or gasket, the leak entry point could be at that location.

WIND NOISE

Wind noise is the result of most air leaks. Air leaks can be caused by poor sealing, improper body component alignment, body seam porosity, or missing plugs in the engine compartment or door hinge pillar areas. All body sealing points should be airtight in normal driving conditions. Moving sealing surfaces will not always seal airtight under all conditions. At times, side glass or door seals will allow wind noise to be noticed in the passenger compartment during high cross winds. Over compensating on door or glass adjustments to stop wind noise that occurs under severe conditions can cause premature seal wear and excessive closing or latching effort. After a repair procedure has been performed, test vehicle to verify noise has stopped before returning vehicle to use.

VISUAL INSPECTION BEFORE TESTS

Verify that floor and body plugs are in place and body components are aligned and sealed. If compo-

BODY (Continued)

nent alignment or sealing is necessary, refer to the appropriate section of this group for proper procedures.

ROAD TESTING WIND NOISE

(1) Drive the vehicle to verify the general location of the wind noise.

(2) Apply 50 mm (2 in.) masking tape in 150 mm (6 in.) lengths along weatherstrips, weld seams or moldings. After each length is applied, drive the vehicle. If noise goes away after a piece of tape is applied, remove tape, locate, and repair defect.

POSSIBLE CAUSE OF WIND NOISE

- Moldings standing away from body surface can catch wind and whistle.
- Gaps in sealed areas behind overhanging body flanges can cause wind-rushing sounds.
- Misaligned movable components.
- Missing or improperly installed plugs in pillars.
- Weld burn through holes.

STANDARD PROCEDURE

STANDARD PROCEDURE - BODY LUBRICATION

All mechanisms and linkages should be lubricated when necessary, except the door check straps and latches. This will maintain ease of operation and provide protection against rust and excessive wear. The weatherstrip seals should be lubricated to prolong their life as well as to improve door sealing.

All applicable exterior and interior vehicle operating mechanisms should be inspected and cleaned. Pivot/sliding contact areas on the mechanisms should then be lubricated.

(1) When necessary, lubricate the operating mechanisms with the specified lubricants.

(2) Apply silicone lubricant to a cloth and wipe it on door seals to avoid over-spray that can soil passenger's clothing.

(3) Before applying lubricant, the component should be wiped clean. After lubrication, any excess lubricant should be removed.

(4) The hood latch, latch release mechanism, latch striker, and safety latch should be lubricated periodically.

(5) The door lock cylinders should be lubricated twice each year (preferably autumn and spring).

- Spray a small amount of lock cylinder lubricant directly into the lock cylinder.
- Apply a small amount to the key and insert it into the lock cylinder.
- Rotate it to the locked position and then back to the unlocked position several times.
- Remove the key. Wipe the lubricant from it with a clean cloth to avoid soiling of clothing.

(6) Door and swing gate check straps should be wiped clean but not lubricated.

Component	Fluid, Lubricant, and Genuine Part
Hinges:	
Door & Hood	Mopar® Engine Oil
Swing Gate	Mopar® Multi-Purpose Lube NLGI Grade 2 EP, GC-LB
Latches: Hood/Safety Catch	Mopar® Multi-Purpose Lube NLGI Grade 2 EP, GC-LB
Seat Regulator & Track	Mopar® Multi-Purpose Lube NLGI Grade 2 EP, GC-LB
Lock Cylinders	Mopar® Lock Cylinder Lube

HEAT STAKING

(1) Remove trim panel.

(2) Bend or move the trim panel components at the heat staked joints. Observe the heat staked locations and/or component seams for looseness.

(3) Heat stake the components.

(a) If the heat staked or component seam location is loose, hold the two components tightly together and using a soldering gun with a flat tip, melt the material securing the components together. Do not over heat the affected area, damage to the exterior of the trim panel may occur.

(b) If the heat staked material is broken or missing, use a hot glue gun to apply new material to the area to be repaired. The panels that are being heat staked must be held together while the applying the glue. Once the new material is in place, it may be necessary to use a soldering gun to melt the newly applied material. Do not over heat the affected area, damage to the exterior of the trim panel may occur.

(4) Allow the repaired area to cool and verify the repair.

(5) Install trim panel.

STANDARD PROCEDURE - PLASTIC BODY PANEL REPAIR

There are many different types of plastics used in today's automotive environment. We group plastics in three different categories: Rigid, Semi-Rigid, and Flexible. Any of these plastics may require the use of an adhesion promoter for repair. These types of plastic are used extensively on DaimlerChrysler Motors vehicles. Always follow repair material manufacturer's plastic identification and repair procedures.

BODY (Continued)

Rigid Plastics:

Examples of rigid plastic use: Fascias, Hoods, Doors, and other Body Panels, which include SMC, ABS, and Polycarbonates.

Semi-Rigid Plastics:

Examples of semi-rigid plastic use: Interior Panels, Under Hood Panels, and other Body Trim Panels.

Flexible Plastics:

Examples of flexible plastic use: Fascias, Body Moldings, and upper and lower Fascia Covers.

Repair Procedure:

The repair procedure for all three categories of plastics is basically the same. The one difference is the material used for the repair. The materials must be specific for each substrate, rigid repair material for rigid plastic repair, semi-rigid repair material for semi-rigid plastic repair and flexible repair material for flexible plastic repair.

Adhesion Promoter/Surface Modifier:

Adhesion Promoters/Surface Modifiers are required for certain plastics. All three categories may have plastics that require the use of adhesion promoter/surface modifiers. Always follow repair material manufacturer's plastic identification and repair procedures.

SAFETY PRECAUTION AND WARNINGS

WARNING:

- **EYE PROTECTION SHOULD BE USED WHEN SERVICING COMPONENTS. PERSONAL INJURY CAN RESULT.**
- **USE AN OSHA APPROVED BREATHING MASK WHEN MIXING EPOXY, GRINDING, AND SPRAYING PAINT OR SOLVENTS IN A CONFINED AREA. PERSONAL INJURY CAN RESULT.**
- **AVOID PROLONGED SKIN CONTACT WITH RESIN, PETROLEUM, OR ALCOHOL BASED SOLVENTS. PERSONAL INJURY CAN RESULT.**
- **DO NOT VENTURE UNDER A HOISTED VEHICLE THAT IS NOT PROPERLY SUPPORTED ON SAFETY STANDS. PERSONAL INJURY CAN RESULT.**

NOTE:

- **When holes must be drilled or cut in body panels, verify locations of internal body components and electrical wiring. Damage to vehicle can result.**
- **Do not use abrasive chemicals or compounds on undamaged painted surfaces around repair areas. Damage to finish can result.**

RIGID, SEMI-RIGID, AND FLEXIBLE PLASTIC PARTS TYPES

CODE	FAMILY NAME	COMMON TRADE NAME	TYPICAL APPLICATION
ASA	ACRYLONITRILE STYRENE ACRYLITE	LURAN S	CONSOLES, GRILLES
ABS	ACRYLONITRILE BUTADIENE STYRENE	TERLURAN	″A″ PILLARS, CONSOLES, GRILLES
ABS/PC	ABS/PC ALLOY	PULSE, PROLOY, BAYBLEND	DOORS, INSTRUMENT PANELS
ABS/PVC	ABS/PV ALLOY	PROLOY, PULSE, LUSTRAN, CYCLOVIN	DOOR PANELS, GRILLES, TRIM
BMC	BULK MOLDING COMPOUND	BMC	FENDER EXTENSIONS
EMA	EHTYLENE METHYL ACRYLATE/IONOMER	SURLYN, EMA, IONOMER	BUMPER GUARDS, PADS
METTON	METTON	METTON	GRILLES, KICK PANELS, RUNNING BOARDS
MPPO	MODIFIED POLYPHENYLENE OXIDE	MPPO	SPOILER ASSEMBLY
PA	POLYAMID	ZYTEL, VYDYNE, PA, MINLON	FENDERS, QUARTER PANELS

BODY (Continued)

CODE	FAMILY NAME	COMMON TRADE NAME	TYPICAL APPLICATION
PET	THERMOPLASTIC POLYESTER	RYNITE	TRIM
PBT/PPO	PBT/PPO ALLOY	GERMAX	CLADDINGS
PBTP	POLYBUTYLENE THEREPTHALATE	PBT, PBTP, POCAN, VALOX	WHEEL COVERS, FENDERS, GRILLES
PBTP/EEBC	POLYBUTYLENE THEREPTHALATE/EEBC ALLOY	BEXLOY, ″M″, PBTP/EEBC	FASCIAS, ROCKER PANEL, MOLDINGS
PC	POLYCARBONATE	LEXAN, MERLON, CALIBRE, MAKROLON PC	TAIL LIGHT LENSES, IP TRIM, VALANCE PANELS
PC/ABS	PC/ABS ALLOY	GERMAX, BAY BLENDS, PULSE	DOORS, INSTRUMENT PANELS
PPO	POLYPHENYLENE OXIDE	AZDEL, HOSTALEN, MARLEX, PRFAX, NORYL, GTX, PPO	INTERIOR TRIM, DOOR PANELS, SPLASH SHIELDS, STEERING COLUMN SHROUD
PPO/PA	POLYPHENYLENE/ POLYAMID	PPO/PA, GTX 910	FENDERS, QUARTER PANELS
PR/FV	FIBERGLASS REINFORCED PLASTIC	FIBERGLASS, FV, PR/FV	BODY PANELS
PS	POLYSTYRENE	LUSTREX, STYRON, PS	DOOR PANELS, DASH PANELS
RTM	RESIN TRANSFER MOLDING COMPOUND	RTM	BODY PANELS
SMC	SHEET MOLDED COMPOUND	SMC	BODY PANELS
TMC	TRANSFER MOLDING COMPOUND	TMC	GRILLES
UP	UNSATURATED POLYESTER (THERMOSETTING)	SMC, BMC, TMC, ZMC, IMC, XSMC, UP	GRILLE OPENING PANEL, LIFTGATES, FLARESIDE FENDERS, FENDER EXTENSIONS
EEBC	ETHER/ESTER BLOCKED CO-POLYMER	EEBC	BUMPERS
EEBC/PBTP	EEBC/POLYBUTYLENE TEREPTHALATE	EEBC, PBTP, BEXLOY	BUMPER, ROCKER PANELS
EMPP	ETHYLENE MODIFIED POLYPROPYLENE	EMPP	BUMPER COVERS
EPDM	ETHYLENE/ PROPROPYLENE DIENE MONOMER	EPDM, NORDEL, VISTALON	BUMPERS
EPM	ETHYLENE/ PROPROPYLENE CO-POLYMER	EPM	FENDERS
MPU	FOAM POLYURETHANE	MPU	SPOILERS
PE	POLYETHYLENE	ALATHON, DYLAN, LUPOLEN, MARLEX	-

BODY (Continued)

CODE	FAMILY NAME	COMMON TRADE NAME	TYPICAL APPLICATION
PP	POLYPROPYLENE (BLENDS)	NORYL, AZDEL, MARLOX, DYLON, PRAVEX	INNER FENDER, SPOILERS, KICK PANELS,A-PILLARS, DOOR PANELS, B-PILLARS, QUARTER PANELS, SPORT BAR TRIM, LIFTGATE TRIM, DECKLID TRIM SCUFF PLATES, KICK PANELS, CONSOLES
PP/EPDM	PP/EPDM ALLOY	PP/EPDM	SPOILERS, GRILLES
PUR	POLYURETHANE	COLONELS, PUR, PU	FASCIAS, BUMPERS
PUR/PC	PUR/PC ALLOY	TEXIN	BUMPERS
PVC	POLYVINYL CHLORIDE	APEX, GEON, VINYLITE	BODY MOLDINGS, WIRE INSULATION, STEERING WHEELS
RIM	REACTION INJECTED MOLDED POLYURETHANE	RIM, BAYFLEX	FRONT FASCIAS, MODULAR WINDOWS
RRIM	REINFORCED REACTION INJECTED MOLDED	PUR, RRIM	FASCIAS, BODY PANELS, BODY TRIMS
TPE	THERMO POLYETHYLENE	TPE, HYTREL, BEXLOY-V	FASCIAS, BUMPERS, CLADDINGS
TPO	THERMOPOLYOLEFIN	POLYTROPE, RENFLEX, SANTOPRENE, VISAFLEX, ETA, APEX, TPO, SHIELDS, CLADDINGS	BUMPERS, END CAPS, TELCAR, RUBBER, STRIPS, SIGHT, INTERIOR B POST
TPP	THERMO-POLYPROPYLENE	TPP	BUMPERS
TPU	THERMOPOLYURETHANE, POLYESTER	TPU, HYTREL, TEXIN, ESTANE	BUMPERS, BODY SIDE, MOLDINGS, FENDERS, FASCIAS

PANEL SECTIONING

If it is required to section a large panel for a plastic repair, it will be necessary to reinforce the panel (Fig. 1). To bond two plastic panels together, a reinforcement must overlap both panels. The panels must be “V’d” at a 20 degree angle. The area to be reinforced should be washed, then sanded. Be sure to wipe off any excess soap and water when finished. Lightly sand or abrade the plastic with an abrasive pad or sandpaper. Blow off any dust with compressed air or wipe with a clean dry rag.

When bonding plastic panels, Follow repair material manufacturers recommendations. Be sure that enough adhesive has been applied to allow squeeze out and to fill the full bond line. Once the pieces have been brought together, do not move them until the adhesive is cured. The assembly can be held together with clamps, rivets, etc. A faster cure can be obtained by heating with a heat lamp or heat gun. After the parts have been bonded and have had time to cure, rough sand the seam and apply the final adhesive filler to the area being repaired. Smooth the filler with a spreader, wooden tongue depressor, or squeegee. For fine texturing, a small amount of

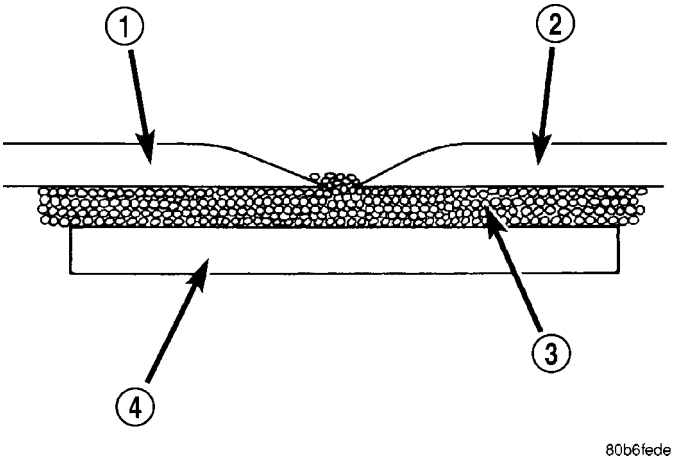

Fig. 1 PANEL SECTIONING

1 - EXISTING PANEL
2 - NEW PANEL
3 - PANEL ADHESIVE
4 - BONDING STRIP

BODY (Continued)

water can be applied to the filler surface while smoothing. The cured filler can be sanded as necessary and, as a final step, cleanup can be done with soapy water. Wipe the surface clean with a dry cloth allowing time for the panel to dry before moving on with the repair.

PANEL REINFORCEMENT

Structural repair procedures for rigid panels with large cracks and holes will require a reinforcement backing. Reinforcements can be made with several applications of glass cloth saturated with structural adhesive. Semi-rigid or flexible repair materials should be used for semi-rigid or flexible backing reinforcement (Fig. 2) and (Fig. 3). Open meshed fiberglass dry wall tape can be used to form a reinforcement. The dry wall tape allows the resin to penetrate through and make a good bond between the panel and the adhesive. Structurally, the more dry wall tape used, the stronger the repair.

Another kind of repair that can be done to repair large cracks and holes is to use a scrap piece of similar plastic and bond with structural adhesive. The reinforcement should cover the entire break and should have a generous amount of overlap on either side of the cracked or broken area.

When repairing plastic, the damaged area is first "V'd" out, or beveled. Large bonding areas are desirable when repairing plastic because small repairs are less likely to hold permanently. Beveling the area around a crack at a 20 degree angle will increase the bonding surface for a repair (Fig. 4). It is recommended that sharp edges be avoided because the joint may show through after the panel is refinished.

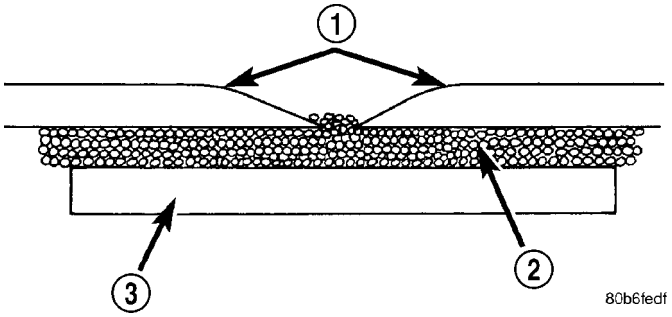

Fig. 2 SOFTENED EDGES

1 - SOFTENED EDGES
2 - PANEL ADHESIVE
3 - BONDING STRIP

- Panel repair for both flexible and rigid panels are basically the same. The primary difference between flexible panel repair and rigid panel repair is in the adhesive materials used (Fig. 5).
- The technician should first decide what needs to be done when working on any type of body panel. One should determine if it is possible to return the damage part to its original strength and appearance without exceeding the value of the replacement part.
- When plastic repairs are required, it is recommended that the part be left on the vehicle when ever possible. That will save time, and the panel will remain stationary during the repair. Misalignment can cause stress in the repair areas and can result in future failure.

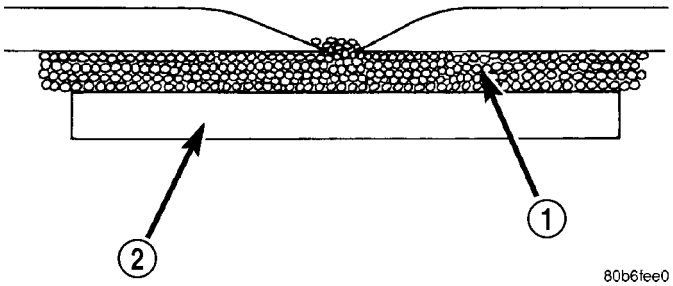

Fig. 3 PANEL REINFORCEMENT

1 - PANEL ADHESIVE
2 - REINFORCEMENT

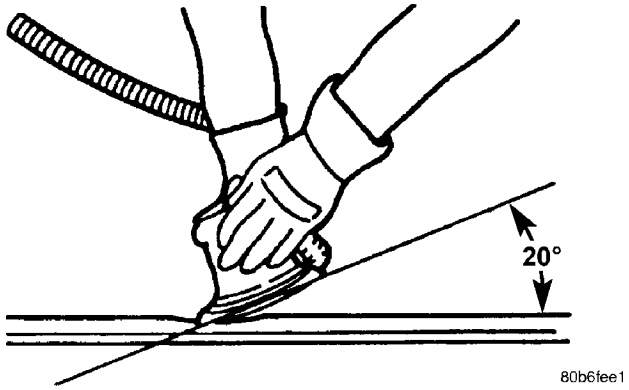

Fig. 4 BEVELING ANGLE - 20 DEGREE

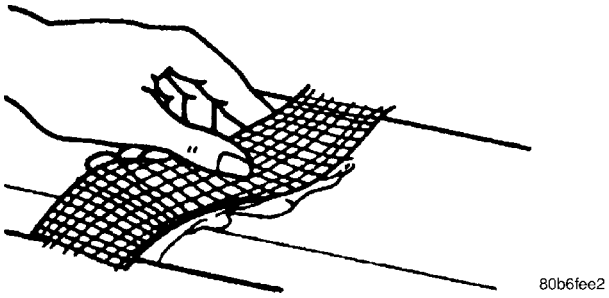

Fig. 5 FIBERGLASS TAPE

VISUAL INSPECTION

Composite materials can mask the severity of an accident. Adhesive bond lines, interior structure of the doors, and steel structures need to be inspected carefully to get a true damage assessment. Close inspection may require partial removal of interior trim or inner panels.

Identify the type of repair: Puncture or Crack - Damage that has penetrated completely through the

BODY (Continued)

panel. Damage is confined to one general area; a panel section is not required. However, a backer panel, open fiberglass tape, or matted material must be bonded from behind (Fig. 7) (Fig. 6).

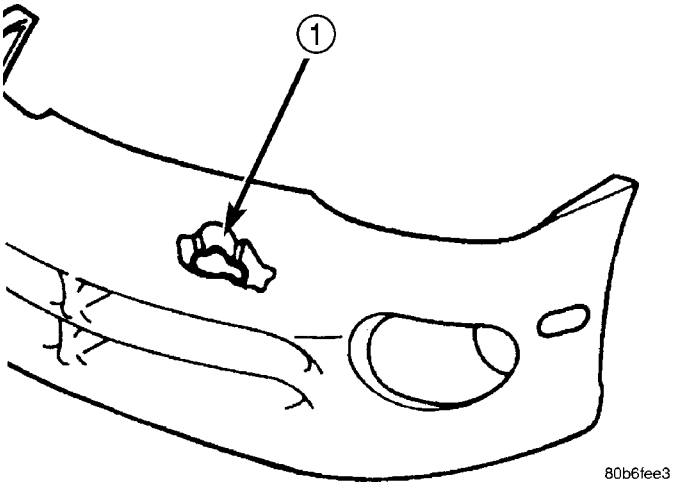

Fig. 6 DAMAGE COMPONENT

1 - PUNCTURE

PANEL SURFACE PREPARATION

If a body panel has been punctured, cracked, or crushed, the damaged area must be removed from the panel to achieve a successful repair. All spider web cracks leading away from a damaged area must be stopped or removed. To stop a running crack in a panel, drill a 6 mm (0.250 in.) hole at the end of the crack farthest away from the damage. If spider web cracks can not be stopped, the panel would require replacement. The surfaces around the damaged area should be stripped of paint and freed from wax and oil. Scuff surfaces around repair area with 360 grit wet/dry sandpaper, or equivalent, to assure adhesion of repair materials.

PATCHING PANELS

An panel that has extensive puncture type damage can be repaired by cutting out the damaged material (Fig. 7). Use a suitable reciprocating saw or cut off wheel to remove the section of the panel that is damaged. The piece cut out can be used as a template to shape the new patch. It is not necessary to have access to the back of the panel to install a patch. Bevel edges of cutout at 20 degrees to expose a larger bonding area on the outer side. This will allow for an increased reinforcement areas.

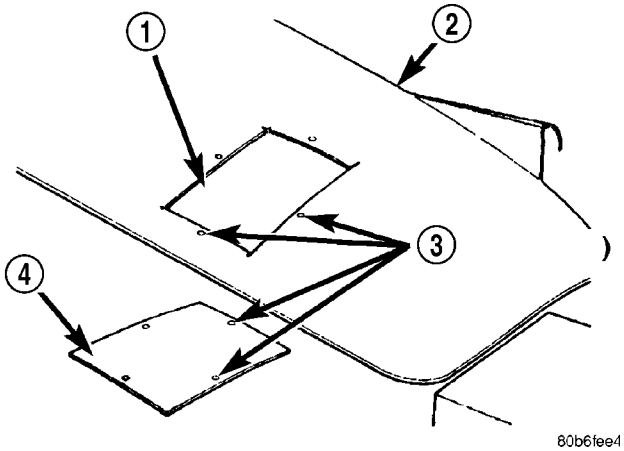

Fig. 7 DAMAGED PANEL CUTOUT AND PATCH

1 - CUTOUT
2 - DAMAGED BODY PANEL
3 - 4 MM (0.160 IN.) HOLES
4 - PATCH CUT TO SIZE

PANEL PATCH FABRICATIONS

A patch can be fabricated from any rigid fiberglass panel that has comparable contour with the repair area. Lift gates and fenders can be used to supply patch material. If existing material is not available or compatible, a patch can be constructed with adhesive and reinforcement mesh (dry wall tape). Perform the following operation if required:

(1) Cover waxed paper or plastic with adhesive backed nylon mesh (dry wall tape) larger than the patch required (Fig. 8).

(2) Tape waxed paper or plastic sheet with mesh to a surface that has a compatible contour to the repair area.

(3) Apply a liberal coat of adhesive over the reinforcement mesh (Fig. 8). If necessary apply a second or third coat of adhesive and mesh after first coat has cured. The thickness of the patch should be the same as the repair area.

(4) After patch has cured, peel waxed paper or plastic from the back of the patch.

(5) If desired, a thin film coat of adhesive can be applied to the back of the patch to cover mesh for added strength.

BODY (Continued)

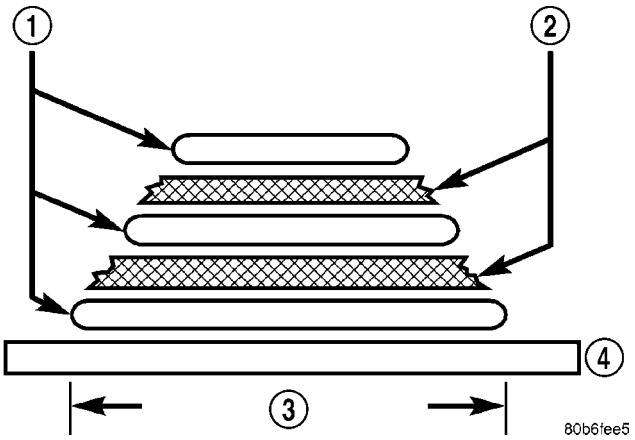

Fig. 8 FABRICATED PANEL

1 - STRUCTURAL ADHESIVE
2 - FIBERGLASS CLOTH OR FIBERGLASS MESH TAPE
3 - WIDTH OF V-GROOVE
4 - WAXED PAPER

PANEL PATCH INSTALLATION

(1) Make a paper or cardboard pattern the size and shape of the cutout hole in the panel.

(2) Trim 3 mm (0.125 in.) from edges of pattern so patch will have a gap between connecting surfaces.

(3) Using the pattern as a guide, cut the patch to size.

(4) Cut scrap pieces of patch material into 50 mm (2 in.) squares to use as patch supports to sustain the patch in the cutout.

(5) Drill 4 mm (0.160 in.) holes 13 mm (0.5 in.) in from edge of cutout hole (Fig. 7).

(6) Drill 4 mm (0.160 in.) holes 13 mm (0.5 in.) away from edge of patch across from holes drilled around cutout.

(7) Drill 3 mm (0.125 in.) holes in the support squares 13 mm (0.5 in.) from the edge in the center of one side.

(8) Scuff the backside of the body panel around the cutout hole with a scuff pad or sandpaper.

(9) Mix enough adhesive to cover one side of all support squares.

(10) Apply adhesive to cover one side of all support squares.

(11) Using number 8 sheet metal screws, secure support squares to back side of body panel with adhesive sandwiched between the panel and squares (Fig. 9).

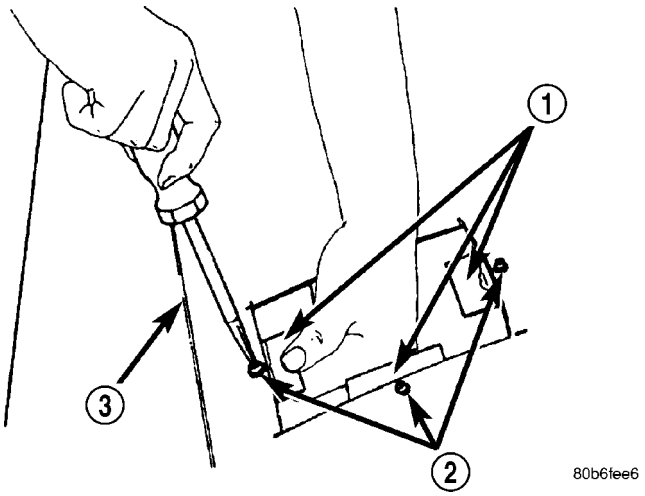

Fig. 9 SECURE SUPPORT SQUARES TO BODY PANEL

1 - SUPPORT SQUARES
2 - SCREWS
3 - DAMAGED BODY PANEL

(12) Position patch in cutout against support squares and adjust patch until the gap is equal along all sides (Fig. 10).

(13) Drill 3 mm (0.125 in.) holes in the support squares through the pre-drilled holes in the patch.

(14) Apply a coat of adhesive to the exposed ends of the support squares (Fig. 11).

(15) Install screws to hold the patch to support squares (Fig. 12). Tighten screws until patch surface is flush with panel surface.

(16) Allow adhesive to cure, and remove all screws.

(17) Using a 125 mm (5 in.) 24 grit disc grinder, grind a 50 mm (2 in.) to 75 mm (3 in.) wide and 2 mm (0.080 in.) deep path across the gaps around the patch (Fig. 13). With compressed air, blow dust from around patch.

(18) Apply adhesive backed nylon mesh (dry wall tape) over gaps around patch (Fig. 14).

(19) Mix enough adhesive to cover the entire patch area.

(20) Apply adhesive over the mesh around patch, and smooth epoxy with a wide spreader to reduce finish grinding. Use two to three layers of mesh and adhesive to create a stronger repair (Fig. 15).

BODY (Continued)

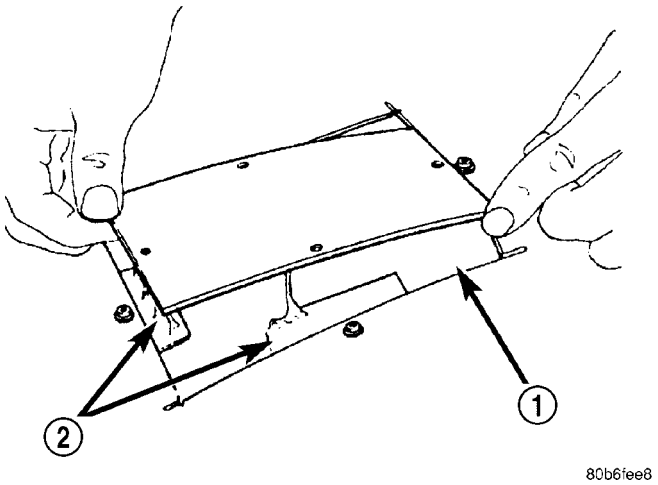

Fig. 10 POSITION PATCH IN CUTOUT AND ALIGN

1 - CUTOUT
2 - SUPPORT SQUARES

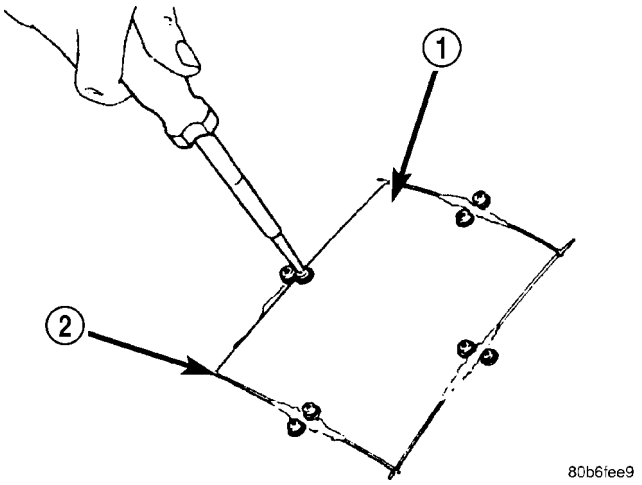

Fig. 12 INSTALL SCREWS

1 - PATCH
2 - GAP

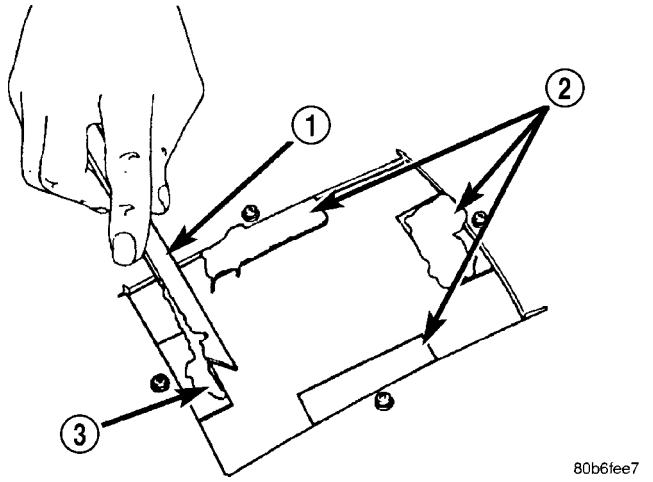

Fig. 11 APPLY ADHESIVE TO SUPPORT SQUARES

1 - APPLICATOR
2 - SUPPORT SQUARES
3 - ADHESIVE

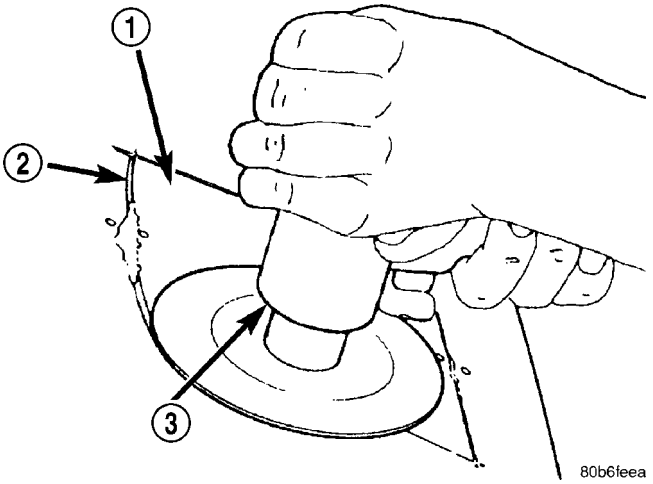

Fig. 13 GRIND SURFACE

1 - PATCH
2 - GAP
3 - DISC GRINDER

BODY (Continued)

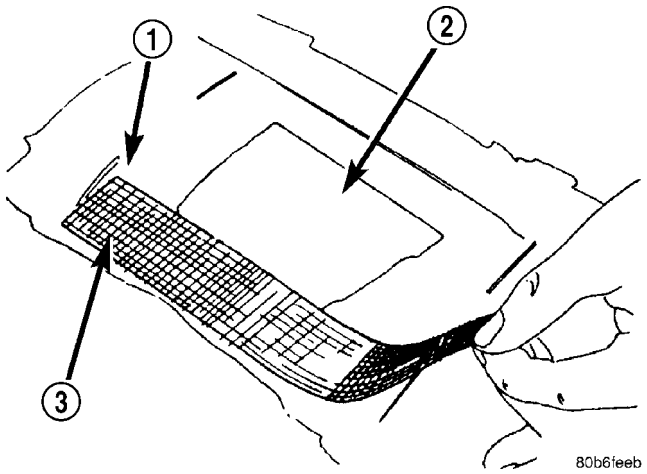

Fig. 14 COVER GAPS WITH MESH

1 - GROUND DOWN AREA
2 - PATCH
3 - MESH

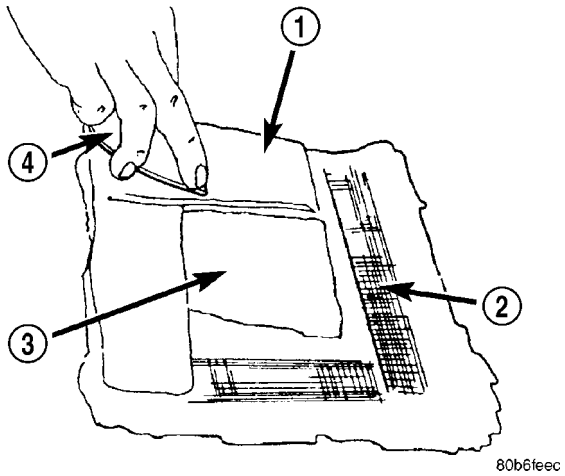

Fig. 15 COVER MESH WITH ADHESIVE

1 - ADHESIVE
2 - MESH
3 - PATCH
4 - SPREADER

PATCHED PANEL SURFACING

After patch panel is installed, the patch area can be finished using the same methods as finishing other types of body panels. If mesh material is exposed in the patched area, grind surface down, and apply a coat of high quality rigid plastic body filler. Prime, block sand, and paint as required.

BUZZ, SQUEAK & RATTLE

Buzz, Squeak & Rattles (BSR) may be caused by any one or more of the following and may be corrected as indicated:

- Loose fasteners should be tightened to specifications.
- Damaged or missing clips should be replaced.
- Damaged trim panels should be replaced.
- Incorrectly installed trim panels should be reinstalled properly.

Many BSR complaints such as loose trim, can be serviced using the Mopar® Parts BSR Noise Reduction Kit. This kit contains various tapes including foam, flock and anti-squeak used to eliminate noises caused by metal, plastic and vinyl components. Long life lubricants and greases can also be used on a variety of components. Refer to the Buzz, Squeak & Rattle Kit table for material contents and usage.

BODY (Continued)

BUZZ, SQUEAK & RATTLE KIT

ITEM	FEATURES	APPLICATIONS	SERVICE TEMP
Itch And Squeak Tape	An abrasion resistant material thin enough to conform to most irregular surfaces. Stops most itches and squeaks.	Between metal and metal, metal and plastic, metal and vinyl, vinyl and plastic. Interior. Examples: Trim panels and bezels.	-40° to 225° Fahrenheit (-40° to 107° Celsius)
Black Nylon Flock	Nylon Flock with an aggressive acrylic adhesive. Provides for cushioning and compression fit, also isolates components. Water-resistant.	Between metal and metal, metal and plastic, vinyl and plastic. Examples: Pull cups, bezels, clips, ducts, top cover to glass, cowl panel.	-40° to 180° Fahrenheit (-40° to 82° Celsius)
High Density Urethane Foam	Tear resistant, highly resilient and durable.	Between metal and metal, metal and plastic. Water-resistant. Examples: I/P, heavy metal rattles, isolating brackets.	-40° to 180° Fahrenheit (-40° to 82° Celsius)
Open Cell Foam Tape	Soft foam conforms to irregular surfaces.	Wire harness and connector wrap. Examples: Seals, gasket, wiring, heat ducts.	-40° to 180° Fahrenheit (-40° to 82° Celsius)
Closed Cell Low Density Foam Tape	Soft, conformable. Water-resistant.	Wherever bulk is needed. Prevents closing flutters and rattles when applied to door watershield. Examples: Door, I/P.	-40° to 180° Fahrenheit (-40° to 82° Celsius)
NYE® Grease 880	Long life.	Suspensions. Examples: Strut busings, sway bars.	-40° to 390° Fahrenheit (-40° to 200° Celsius)
Krytox® Oil	Long life. Will not dry out or harm plastics or rubber.	When access is not possible, oil will migrate to condition. Vinyl, rubber, plastic, metal. Examples: Convertible top bushings, pull cups trim panel inserts.	-30° to 400° Fahrenheit (-34° to 205° Celsius)
Krytox® Grease	Long life. Will not dry out or harm plastics or rubber.	Vinyl, rubber, plastic, metal, glass. Examples: Weather-strips, backlite and windshield moldings.	-30° to 400° Fahrenheit (-34° to 205° Celsius)

BODY (Continued)

SPECIFICATIONS

TORQUE SPECIFICATIONS

DESCRIPTION	N·m	Ft. Lbs.	In. Lbs.
FENDER BOLTS	12	9	—
FLIP-UP GLASS HINGE TO BODY BOLTS	7	—	60
FLIP-UP GLASS HINGE TO GLASS BOLTS	10	—	90
FRONT DOOR CHECK STRAP NUTS	12	9	—
FRONT DOOR CHECK STRAP TO A-PILLAR BOLTS	12	9	—
FRONT DOOR GLASS RUN CHANNEL BOLTS	9	—	80
FRONT DOOR HINGE TO A-PILLAR BOLTS	28	21	—
FRONT DOOR HINGE TO DOOR NUTS	23	17	—
FRONT DOOR LATCH SCREW	11	8	—
FRONT DOOR LATCH STRIKER SCREWS	28	21	—
FRONT DOOR LOCK CYLINDER SCREW	6	—	55
FRONT DOOR OUTSIDE HANDLE NUTS	6	—	55
FRONT DOOR REGULATOR BOLTS	9	—	80
FRONT SEAT BACK RECLINER BOLTS	28	21	—
FRONT SEAT BOLTS/NUT	43	32	—
FRONT SEAT RISER BOLTS	28	21	—
FRONT SEAT TRACK BOLTS	28	21	—
HOOD HINGE TO BODY BOLTS	28	21	—
HOOD HINGE TO HOOD BOLTS	12	9	—
HOOD LATCH NUTS	12	9	—
HOOD LATCH SUPPORT BOLTS	10	—	85
INSTRUMENT PANEL CENTER SUPPORT BRACKET BOLTS	23	17	—
INSTRUMENT PANEL HVAC NUTS/BOLTS	6	—	55
INSTRUMENT PANEL ROLL DOWN BOLTS	54	40	—
INSTRUMENT PANEL TOP BOLTS	28	21	—
OUTSIDE MIRROR NUTS	7	—	65
RADIATOR CROSSMEMBER BOLTS	12	9	—
REAR DOOR CHECK STRAP NUTS	12	9	—
REAR DOOR CHECK STRAP TO B-PILLAR BOLTS	12	9	—
REAR DOOR GLASS RUN CHANNEL BOLTS	9	—	80
REAR DOOR HINGE TO B-PILLAR BOLTS	28	21	—
REAR DOOR HINGE TO DOOR NUTS	23	17	—
REAR DOOR LATCH SCREW	11	8	—
REAR DOOR LATCH STRIKER SCREWS	28	21	—
REAR DOOR OUTSIDE HANDLE NUTS	6	—	55
REAR SEAT BACK HINGE BOLTS	28	21	—
REAR SEAT LATCH/LOCK ASSEMBLY BOLTS	28	21	—
REAR SEAT OUTBOARD NUTS	43	32	—

BODY (Continued)

DESCRIPTION	N·m	Ft. Lbs.	In. Lbs.
REAR SEAT OUTER SEAT CUSHION LEG BOLTS	35	26	—
ROOF RACK BOLTS	8	—	75
SIDE VIEW MIRROR NUTS	7	—	65
SIDE STEP NUTS/BOLTS	23	17	—
SWING GATE EXTERIOR HANDLE NUTS	6	—	55
SWING GATE HINGE BOLTS	31	23	—
SWING GATE HINGE TO D-PILLAR BOLTS	31	23	—
SWING GATE LATCH SCREWS	11	8	—
SWING GATE LATCH STRIKER SCREWS	28	21	—
WASHER BOTTLE BOLT	10	—	85

SPECIAL TOOLS

BODY

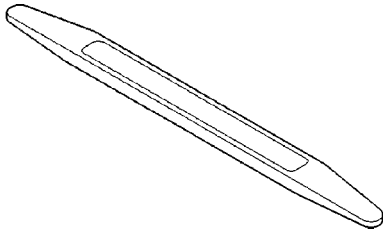

Trim Stick C-4755

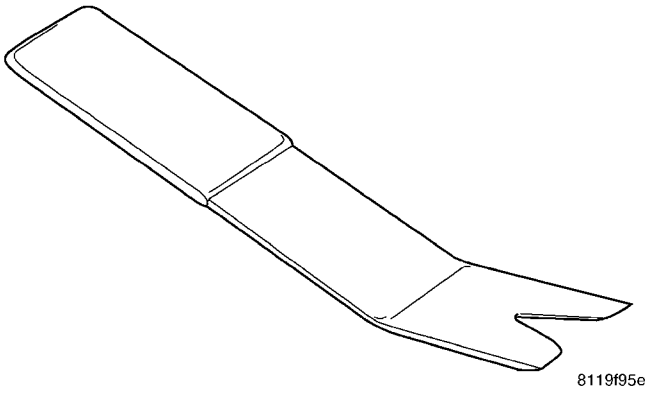

REMOVER, MOLDINGS C-4829-A

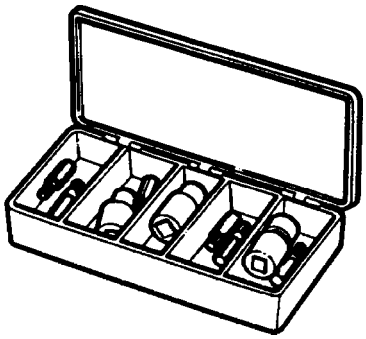

TORX BIT SET C-4794-B

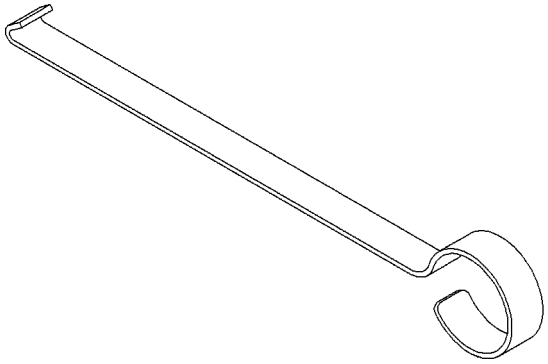

Outer Belt Molding Remover - 9093

HOOD

TABLE OF CONTENTS

page

HINGE
REMOVAL 15
INSTALLATION 15
HOOD
REMOVAL 15
INSTALLATION 15
ADJUSTMENTS
ADJUSTMENT 15
LATCH
REMOVAL 15
INSTALLATION 16
LATCH RELEASE CABLE
REMOVAL 16
INSTALLATION 16
SUPPORT CYLINDER
REMOVAL 16
INSTALLATION 17
LATCH RELEASE HANDLE
REMOVAL 17
INSTALLATION 17

HINGE

REMOVAL

NOTE: It is not necessary to remove the hood to replace one or both hinges. The hinges can be replaced one at a time.

(1) Raise and support hood.
(2) Using a grease pencil or equivalent, mark position of hinge.
(3) Remove hood support cylinder. (Refer to 23 - BODY/HOOD/SUPPORT CYLINDER - REMOVAL)
(4) Remove nuts attaching hinge to hood.
(5) Remove bolts attaching hinge to body.
(6) Separate hinge from vehicle.

INSTALLATION

(1) Position hinge on vehicle and align reference marks.
(2) Install bolts attaching hinge to body and tighten to 28 N·m (21 ft. lbs.).
(3) Install nuts attaching hinge to hood 12 N·m (9 ft. lbs.).
(4) Install hood hinge support cylinder. (Refer to 23 - BODY/HOOD/SUPPORT CYLINDER - INSTALLATION)

HOOD

REMOVAL

(1) Raise hood.
(2) Using a grease pencil or equivalent, mark location of hood hinges on hood for installation alignment.
(3) Remove bolts attaching hinges to hood.
(4) With the aid of a helper, remove hood from vehicle.

INSTALLATION

(1) Position hood on hinges.
(2) Install bolts finger-tight.
(3) Align hinges with installation reference marks and tighten bolts to 12 N·m (9 ft. lbs.).
(4) Inspect hood for proper alignment and adjust as necessary.

ADJUSTMENTS

ADJUSTMENT

(1) If hood is low in relation to cowl panel, insert shims between hinge and hood.
(2) Adjust hood bumper in or out to adjust hood-to-fender height alignment.
(3) Adjust the hood latch as necessary. Tighten the nuts to 11 N·m (8 ft. lbs.).
(4) Align the latch striker so that striker enters the latch squarely and without binding.

LATCH

REMOVAL

(1) Remove the three bolts from the top of the grille opening reinforcement. (Fig. 1)
(2) Carefully pull the grille opening reinforcement forward and remove the two latch nuts.
(3) Disconnect the release cable.

LATCH (Continued)

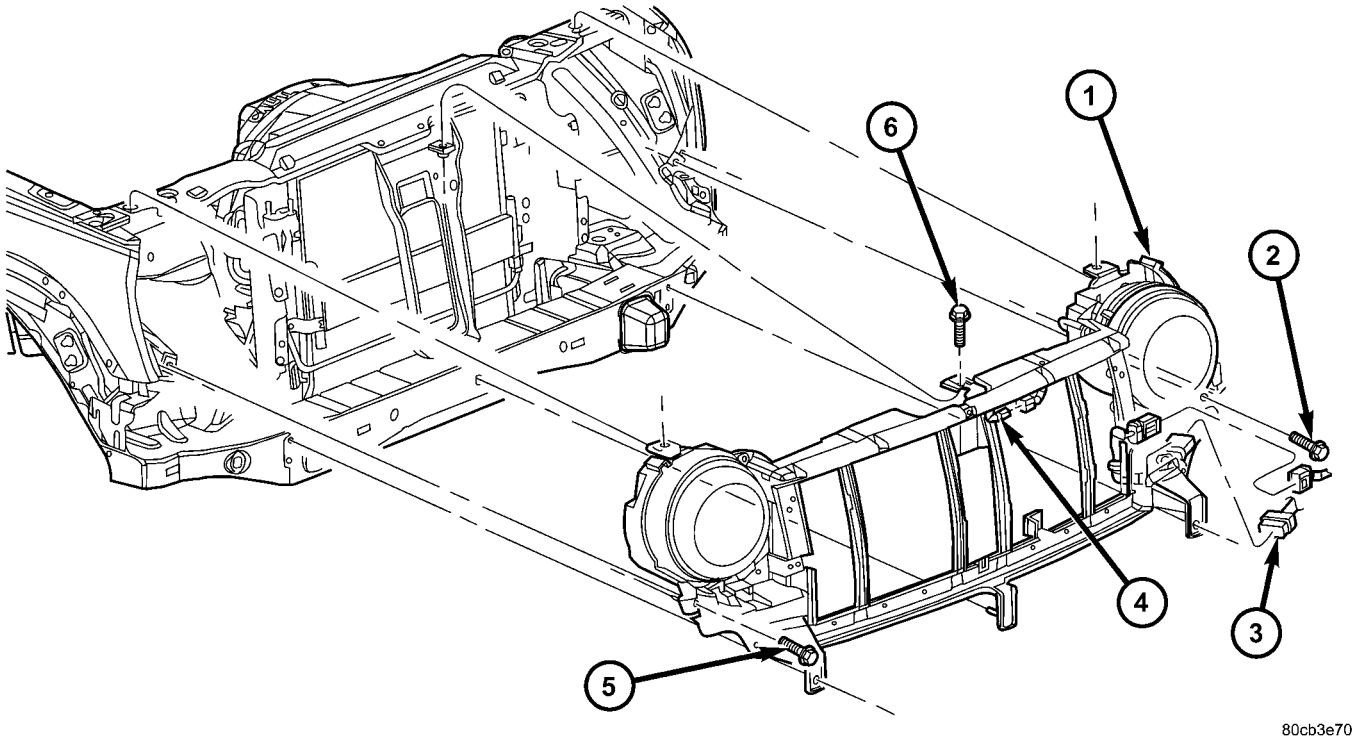

Fig. 1 GRILLE OPENING REINFORCEMENT

1 - GRILLE OPENING REINFORCEMENT
2 - BOLTS (3)
3 - ELECTRICAL CONNECTORS
4 - ELECTRICAL CONNECTOR
5 - BOLTS (3)
6 - BOLT (1)

INSTALLATION

(1) Route latch cable through the hole in the support bracket.

(2) Connect the release cable and install the latch onto the support bracket.

(3) Install the two nuts and tighten to 12 N·m (9 ft. lbs.).

(4) Position the grille opening reinforcement back and install the three upper bolts.

(5) Tighten the bolts to 10 N·m (85 in. lbs.).

LATCH RELEASE CABLE

REMOVAL

(1) Remove the battery. (Refer to 8 - ELECTRICAL/BATTERY SYSTEM/BATTERY - REMOVAL)

(2) Remove the hood latch. (Refer to 23 - BODY/HOOD/LATCH - REMOVAL)

(3) Remove the powertrain control module. (Refer to 8 - ELECTRICAL/ELECTRONIC CONTROL MODULES/POWERTRAIN CONTROL MODULE - REMOVAL)

(4) Remove the hood release handle. (Refer to 23 - BODY/HOOD/LATCH RELEASE HANDLE - REMOVAL)

(5) Disconnect the attaching clips and remove the cable from the inside.

INSTALLATION

(1) Install the cable from the inside and attach the retaining clips.

(2) Install the hood latch release handle. (Refer to 23 - BODY/HOOD/LATCH RELEASE HANDLE - INSTALLATION)

(3) Install the powertrain control module. (Refer to 8 - ELECTRICAL/ELECTRONIC CONTROL MODULES/POWERTRAIN CONTROL MODULE - INSTALLATION)

(4) Install the hood latch. (Refer to 23 - BODY/HOOD/LATCH - INSTALLATION)

(5) Install the battery. (Refer to 8 - ELECTRICAL/BATTERY SYSTEM/BATTERY - INSTALLATION)

SUPPORT CYLINDER

REMOVAL

NOTE: The support cylinders can be replaced one at a time.

SUPPORT CYLINDER (Continued)

(1) Open the hood and support.

NOTE: Lift the clips only enough to release the ball studs. (Fig. 3)

(2) Using a small flat bladed tool, or equivalent, release the upper retaining clips while pulling the ball socket away from the ball stud. (Fig. 2)

CAUTION: Do not pull the supports from the middle while removing.

(3) Pulling at the ends only, remove the support cylinder.

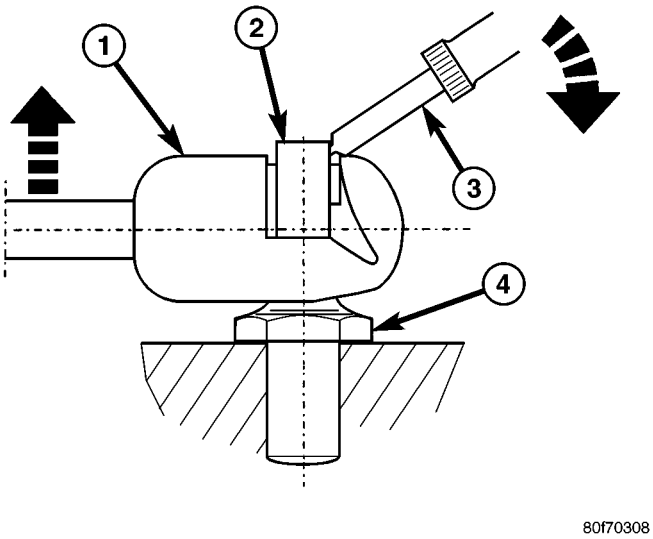

Fig. 2 SUPPORT CYLINDER-BALL SOCKET-TYPICAL

1 - BALL SOCKET
2 - RETAINING CLIP
3 - FLAT BLADED TOOL
4 - BALL STUD

INSTALLATION

(1) Make sure the retaining clips are seated into the ball socket fully.

CAUTION: Do not install the support cylinders by pressing at the center of the cylinder. Press the ends only.

(2) Install the support cylinder over the ball studs with the thin end connected to the body side of the hinge and the retaining clips snapping into place.

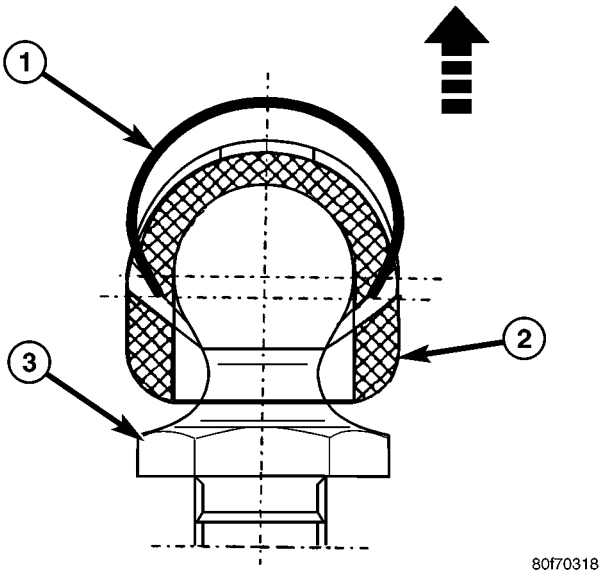

Fig. 3 UPPER SUPPORT CYLINDER RETAINING CLIP

1 - RETAINING CLIP
2 - BALL SOCKET
3 - BALL STUD

LATCH RELEASE HANDLE

REMOVAL

(1) Remove the cowl trim panel. (Refer to 23 - BODY/INTERIOR/COWL TRIM COVER - REMOVAL)

(2) Remove the three screws and remove the handle.

(3) Disconnect the hood release cable.

INSTALLATION

(1) Connect the hood release cable to the handle.

(2) Install the handle and install the three screws.

(3) Install the cowl trim cover. (Refer to 23 - BODY/INTERIOR/COWL TRIM COVER - INSTALLATION)

DOOR - FRONT

TABLE OF CONTENTS

	page
CHECK STRAP	
REMOVAL	18
INSTALLATION	18
DOOR	
REMOVAL	19
INSTALLATION	19
ADJUSTMENTS	
ADJUSTMENT	19
DOOR GLASS	
REMOVAL	20
INSTALLATION	20
EXTERIOR HANDLE	
REMOVAL	20
INSTALLATION	21
GLASS RUN CHANNEL	
REMOVAL	21
INSTALLATION	21
HINGE	
REMOVAL	21
INSTALLATION	21
LATCH	
REMOVAL	21
INSTALLATION	22
LATCH STRIKER	
REMOVAL	22
INSTALLATION	22
LOCK CYLINDER	
REMOVAL	22
INSTALLATION	22
TRIM PANEL	
REMOVAL	23
INSTALLATION	23
WATERDAM	
REMOVAL	23
INSTALLATION	24
WINDOW REGULATOR - MANUAL	
REMOVAL	24
INSTALLATION	25
WINDOW REGULATOR - POWER	
REMOVAL	25
INSTALLATION	26

CHECK STRAP

REMOVAL

(1) Remove the waterdam. (Refer to 23 - BODY/DOOR - FRONT/WATERDAM - REMOVAL)

(2) Remove screws attaching door check to A-pillar.

(3) Remove the two nuts and remove the door check strap. (Fig. 1)

INSTALLATION

NOTE: Make sure the proper orientation of the check strap is maintained using the part number printed on the side. The part number should face inboard toward the interior of the vehicle.

(1) Install the check strap through the speaker hole.

(2) Install the nuts and tighten to 12 N·m (9 ft. lbs.).

(3) Connect the strap to the A-pillar and tighten the bolts to 12 N·m (9 ft. lbs.).

(4) Install the waterdam. (Refer to 23 - BODY/DOOR - FRONT/WATERDAM - INSTALLATION)

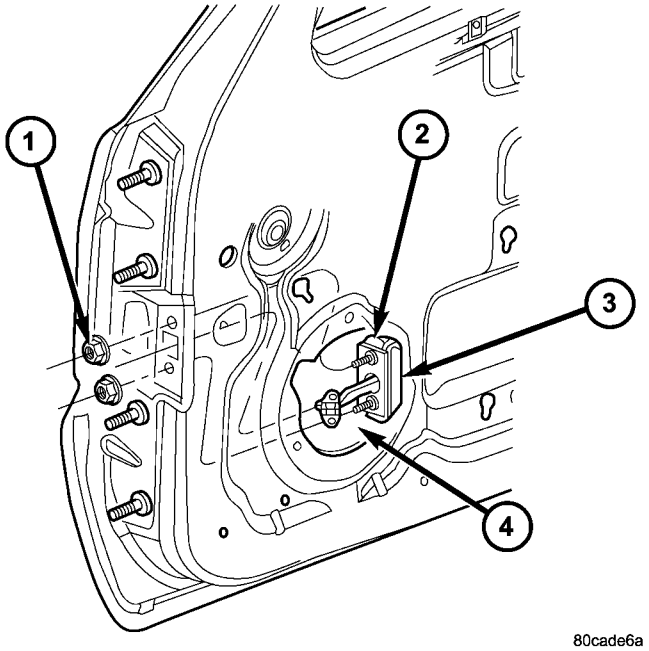

Fig. 1 CHECK STRAP

1 - NUTS
2 - CHECK STRAP
3 - PART NUMBER (FACES INBOARD)
4 - SPEAKER OPENING

DOOR

REMOVAL

(1) Disconnect the door wire harness electrical connector at the A-pillar.

(2) Support the door with a suitable lifting device.

(3) Remove the bolts attaching the check strap to the a-pillar.

NOTE: The epoxy washers should not be removed from the hinge. If the washers are removed the door may have to be re-adjusted.

(4) Remove the nuts attaching the door hinges to the door. (Fig. 2)

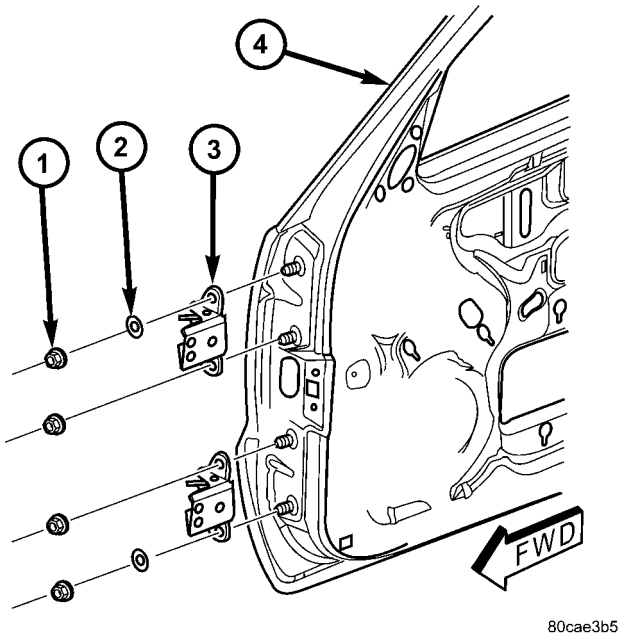

Fig. 2 HINGES

1 - NUTS (4)
2 - EPOXY WASHERS (2) (NOT REMOVABLE)
3 - HINGES
4 - DOOR

INSTALLATION

(1) Support the door with a suitable lifting device and install the door onto the hinges.

(2) Install the nuts and washers if they were removed previously and tighten to 23 N·m (17 ft. lbs.).

(3) Connect the door wire harness electrical connector.

(4) Connect the check strap to the a-pillar and install the bolts.

(5) Tighten the check strap bolts to 12 N·m (9 ft. lbs.).

(6) Adjust the door as necessary. (Refer to 23 - BODY/BODY STRUCTURE/GAP AND FLUSH - SPECIFICATIONS)

ADJUSTMENTS

ADJUSTMENT

NOTE: For vehicles with four doors, it is recommended that you adjust the rear door before adjusting the front door. (Refer to 23 - BODY/DOORS - REAR/DOOR - ADJUSTMENTS)

- **Door adjustment measurements should be taken from stationary or welded body panels like the roof, rocker or quarter panels.**
- **During adjustment procedures, it is recommended that all the hinge fasteners be loosened except for the upper most fasteners. Adjustments can be made using the upper bolts to hold the door with final torque of the fasteners occurring after correct door positioning is achieved.**
- **A suitable body sealant should be used when removing or moving the hinges.**

FORE/AFT

NOTE: Fore/aft (lateral) door adjustment is done by loosening the hinge to the hinge pillar fasteners one hinge at a time and moving the door to the correct position.

(1) Support the door with a suitable lifting device.

(2) Loosen the hinge to hinge pillar fasteners. (Refer to 23 - BODY/DOOR - FRONT/HINGE - REMOVAL)

(3) Adjust the door to the correct position. (Refer to 23 - BODY/BODY STRUCTURE/GAP AND FLUSH - SPECIFICATIONS)

(4) Tighten the hinge pillar fasteners to 28 N·m (21 ft. lbs.).

UP/DOWN

NOTE: Up/down door adjustment is done by loosening either the hinge to the hinge pillar fasteners or the hinge to door fasteners and moving the door to the correct position.

NOTE: When adjustment of the door requires the loosening of the door to hinge fasteners, it will be necessary to separate the epoxy bonded washers with a chisel or other suitable tool.

DOOR (Continued)

NOTE: When the up/down adjustments are done correctly, the top of the door is positioned over flush to the roof. (Refer to 23 - BODY/BODY STRUCTURE/GAP AND FLUSH - SPECIFICATIONS)

(1) Support the door with a suitable lifting device.
(2) Loosen the latch striker bolts. (Refer to 23 - BODY/DOOR - FRONT/LATCH STRIKER - REMOVAL)
(3) Loosen the hinge to door fasteners (Refer to 23 - BODY/DOOR - FRONT/DOOR - REMOVAL) or loosen the hinge to hinge pillar fasteners (Refer to 23 - BODY/DOOR - FRONT/HINGE - REMOVAL).
(4) Adjust the door to the correct position. (Refer to 23 - BODY/BODY STRUCTURE/GAP AND FLUSH - SPECIFICATIONS)
(5) Tighten the hinge pillar fasteners or the door to hinges fasteners to 28 N·m (21 ft. lbs.).
(6) Tighten the latch striker bolts. (Refer to 23 - BODY/DOOR - FRONT/LATCH STRIKER - INSTALLATION)

IN/OUT

NOTE: In/out door adjustment is done by loosening the hinge to door fasteners one hinge at a time and moving the door to the correct position.

NOTE: When adjustment of the door requires the loosening of the door to hinge fasteners, it will be necessary to separate the epoxy bonded washers with a chisel or other suitable tool.

(1) Support the door with a suitable lifting device.
(2) Loosen the latch striker bolts. (Refer to 23 - BODY/DOOR - FRONT/LATCH STRIKER - REMOVAL)
(3) Loosen the hinge to door fasteners. (Refer to 23 - BODY/DOOR - FRONT/DOOR - REMOVAL)
(4) Adjust the door to the correct position. (Refer to 23 - BODY/BODY STRUCTURE/GAP AND FLUSH - SPECIFICATIONS)
(5) Tighten the door to hinges fasteners to 28 N·m (21 ft. lbs.).
(6) Tighten the latch striker bolts. (Refer to 23 - BODY/DOOR - FRONT/LATCH STRIKER - INSTALLATION)

DOOR GLASS

REMOVAL

(1) Remove the outer belt molding. (Refer to 23 - BODY/WEATHERSTRIP/SEALS/FRONT DOOR OUTER BELT MOLDING - REMOVAL)
(2) Remove the waterdam. (Refer to 23 - BODY/DOOR - FRONT/WATERDAM - REMOVAL)
(3) Raise the glass to the position shown and using a long flat blade or hook type tool, disengage clips attaching glass retainer to regulator lift plate. (Fig. 3)
(4) Disconnect the glass from the regulator lift plate and re-install the clips.
(5) Rotate the top of the glass toward the front and remove the glass from the window opening.

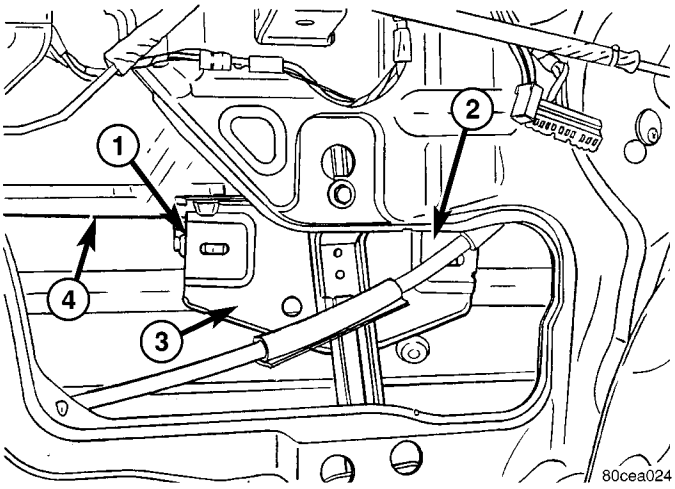

Fig. 3 DOOR GLASS/REGULATOR

1 - DOOR GLASS ATTACHMENT CLIP (2)
2 - DOOR OPENING
3 - REGULATOR LIFT PLATE
4 - DOOR GLASS

INSTALLATION

(1) Install the glass through the window opening and align the mounting plate to the lift plate.
(2) Engage the glass to the regulator lift plate.
(3) Install the outer belt molding. (Refer to 23 - BODY/WEATHERSTRIP/SEALS/FRONT DOOR OUTER BELT MOLDING - INSTALLATION)
(4) Install the waterdam. (Refer to 23 - BODY/DOOR - FRONT/WATERDAM - INSTALLATION)

EXTERIOR HANDLE

REMOVAL

(1) Remove the door glass. (Refer to 23 - BODY/DOOR - FRONT/DOOR GLASS - REMOVAL)
(2) Disconnect the lock switch electrical connector, if equipped. (Fig. 4)
(3) Disconnect the handle rod at the handle and the key cylinder rod at the latch.
(4) Remove the screws.
(5) Remove the nuts and remove the handle.

EXTERIOR HANDLE (Continued)

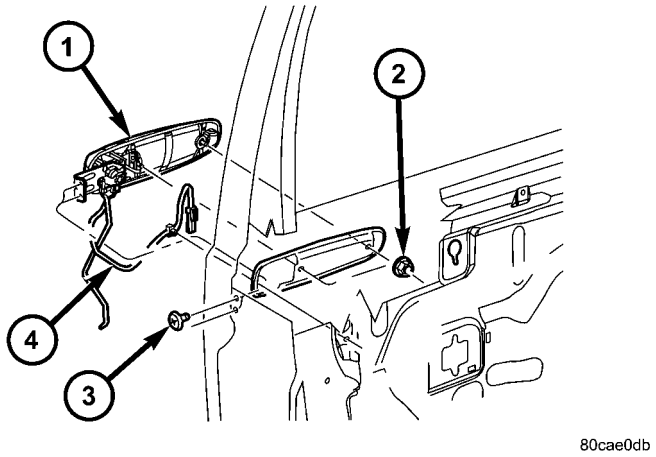

Fig. 4 EXTERIOR HANDLE

1 - EXTERIOR HANDLE
2 - NUTS
3 - SCREWS
4 - ELECTRICAL CONNECTOR

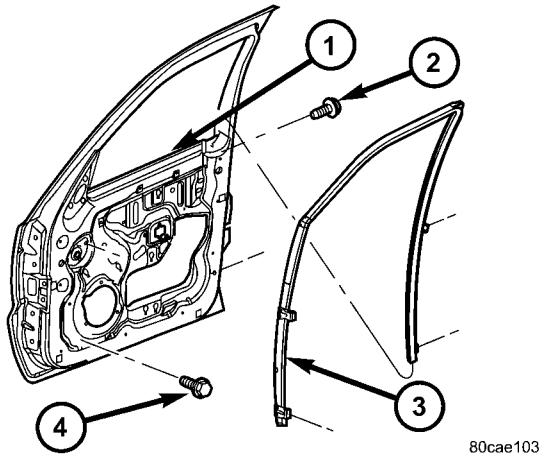

Fig. 5 GLASS RUN CHANNEL

1 - WINDOW OPENING
2 - REAR BOLTS (2)
3 - GLASS RUN CHANNEL
4 - FRONT BOLTS (2)

INSTALLATION

(1) Position the handle on the door and slide fully toward the rear of the door.

(2) Install the nuts and tighten to 6 N·m (55 in. lbs.).

(3) Install the screws and tighten to 6 N·m (55 in. lbs.).

(4) Connect the handle rod at the handle and the key cylinder rod at the latch.

(5) Connect the lock switch electrical connector, if equipped.

(6) Install the door glass. (Refer to 23 - BODY/DOOR - FRONT/DOOR GLASS - INSTALLATION)

GLASS RUN CHANNEL

REMOVAL

(1) Remove the door glass. (Refer to 23 - BODY/DOOR - FRONT/DOOR GLASS - REMOVAL)

(2) Remove the front and rear bolts. (Fig. 5)

(3) Peal the weatherstrip out of the door frame and remove the run channel through the window opening.

INSTALLATION

(1) Install the run channel through the window opening and into the door frame.

(2) Install the front, rear bolts and tighten to 9 N·m (80 in. lbs.).

(3) Install the door glass. (Refer to 23 - BODY/DOOR - FRONT/DOOR GLASS - INSTALLATION)

HINGE

REMOVAL

(1) Remove the door. (Refer to 23 - BODY/DOOR - FRONT/DOOR - REMOVAL)

(2) Using a grease pencil or equivalent, mark the hinge location and remove the bolts.

INSTALLATION

(1) Install the hinges and bolts.

(2) Tighten bolts to 28 N·m (21 ft. lbs.).

(3) Install the door. (Refer to 23 - BODY/DOOR - FRONT/DOOR - INSTALLATION)

LATCH

REMOVAL

(1) Disconnect and isolate the battery negative cable.

(2) Remove the waterdam as necessary to gain access to the latch. (Refer to 23 - BODY/DOOR - FRONT/WATERDAM - REMOVAL)

(3) Disconnect the exterior handle rod at the handle.

(4) Disconnect the lock knob rod and lock cylinder link rod at the latch.

(5) Remove rear glass run channel bolts and position the channel aside. (Fig. 5)

(6) Remove the screws and remove the latch assembly. (Fig. 6)

(7) Disconnect the electrical connectors.

LATCH (Continued)

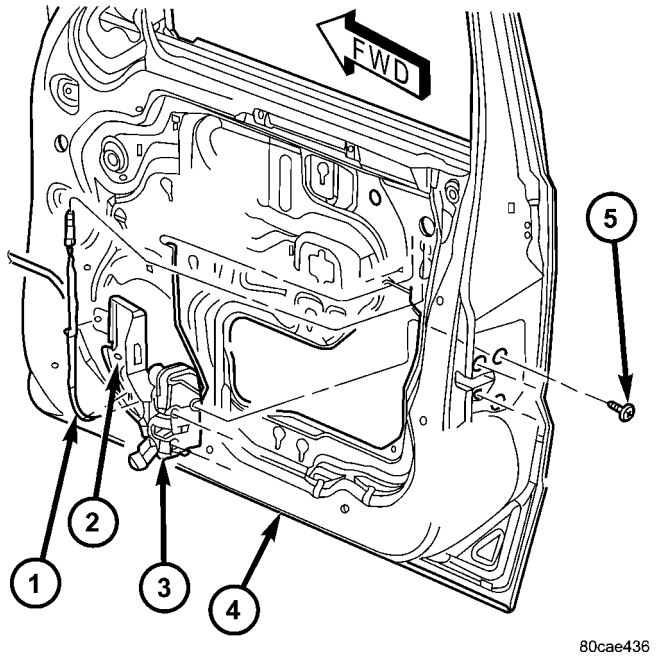

Fig. 6 LATCH

1 - LOCK ACTUATOR ROD
2 - PLASTIC COVER
3 - LATCH ASSEMBLY
4 - DOOR
5 - SCREWS

INSTALLATION

(1) Connect the latch electrical connectors.

(2) Install the latch assembly into the door and install the screws.

(3) Tighten the latch screws to 11 N·m (95 in. lbs.).

(4) Install the rear glass run channel bolts and tighten to 9 N·m (80 in. lbs.).

(5) Connect the lock cylinder link rod and lock knob rod at the latch.

(6) Connect the exterior handle actuator rod at the handle.

(7) Install the waterdam. (Refer to 23 - BODY/DOOR - FRONT/WATERDAM - INSTALLATION)

(8) Reconnect the battery ground cable.

LATCH STRIKER

REMOVAL

(1) Remove the bolts. (Fig. 7)

(2) Remove the latch striker and the spacer, if equipped.

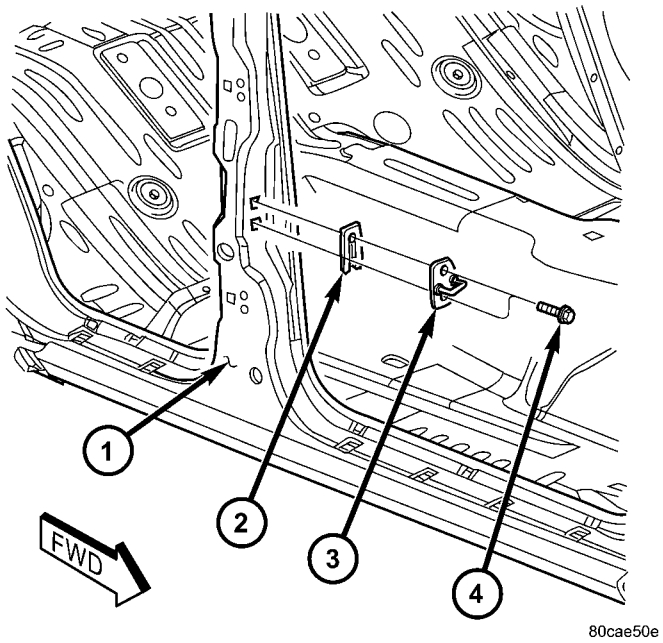

Fig. 7 LATCH STRIKER

1 - B-PILLAR
2 - SPACER
3 - STRIKER
4 - BOLTS (2)

INSTALLATION

(1) Install the striker and spacer, if equipped.

(2) Install the bolts and tighten to 28 N·m (21 ft. lbs.).

(3) Adjust the door as necessary. (Refer to 23 - BODY/BODY STRUCTURE/GAP AND FLUSH - SPECIFICATIONS)

LOCK CYLINDER

REMOVAL

(1) Remove the exterior handle. (Refer to 23 - BODY/DOOR - FRONT/EXTERIOR HANDLE - REMOVAL)

(2) Remove the screw and remove the lock cylinder. (Fig. 8)

INSTALLATION

(1) Install the lock cylinder, the retaining screw and tighten to 6 N·m (55 in. lbs.).

(2) Install the exterior handle. (Refer to 23 - BODY/DOOR - FRONT/EXTERIOR HANDLE - INSTALLATION)

LOCK CYLINDER (Continued)

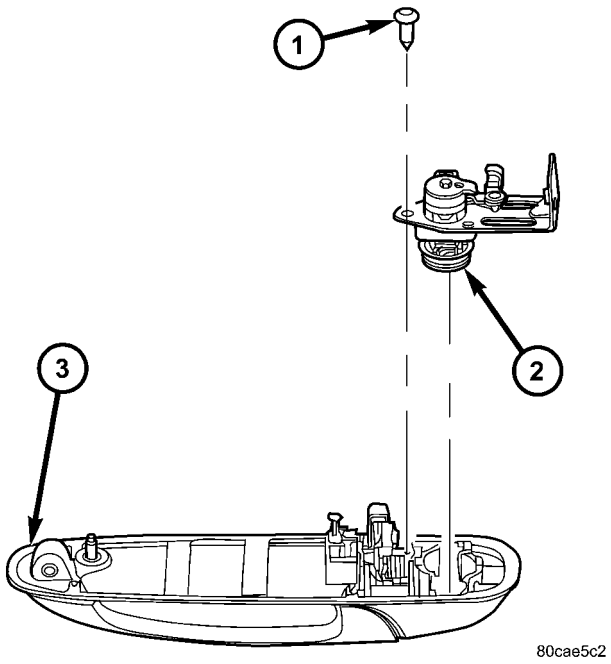

Fig. 8 LOCK CYLINDER

1 - SCREW
2 - LOCK CYLINDER ASSEMBLY
3 - EXTERIOR HANDLE

TRIM PANEL

REMOVAL

(1) Remove the inside handle screw plug and remove the screw. (Fig. 9)

(2) Remove the pull handle screw.

(3) Using a trim stick C-4755 or equivalent, disengage the trim panel clips and remove the trim panel.

(4) Disconnect the electrical connectors and the inside handle actuator rod. (Fig. 10)

INSTALLATION

(1) Connect the inside handle actuator rod and the electrical connectors.

(2) Position the trim panel and seat the clips fully.

(3) Instal the screws and install the screw plug.

WATERDAM

REMOVAL

CAUTION: Do not allow the waterdam or adhesive to become contaminated with dirt or other foreign substances.
Do not damage the waterdam during removal and installation.
If the waterdam becomes contaminated or damaged, replace the waterdam.

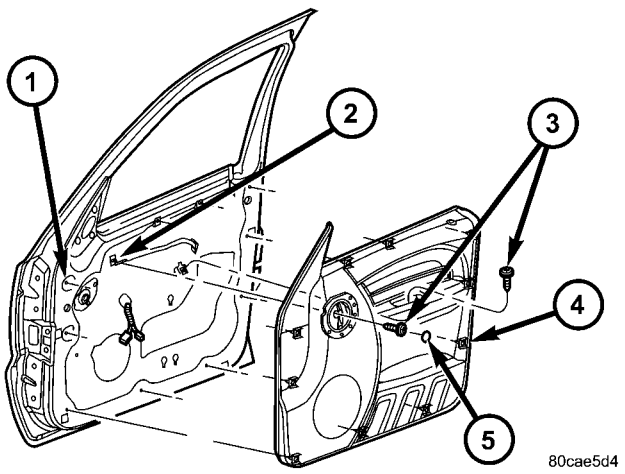

Fig. 9 TRIM PANEL

1 - ALIGNMENT PIN HOLES
2 - LATCH ACTUATOR ROD
3 - SCREWS (2)
4 - TRIM PANEL CLIPS
5 - INSIDE HANDLE SCREW PLUG

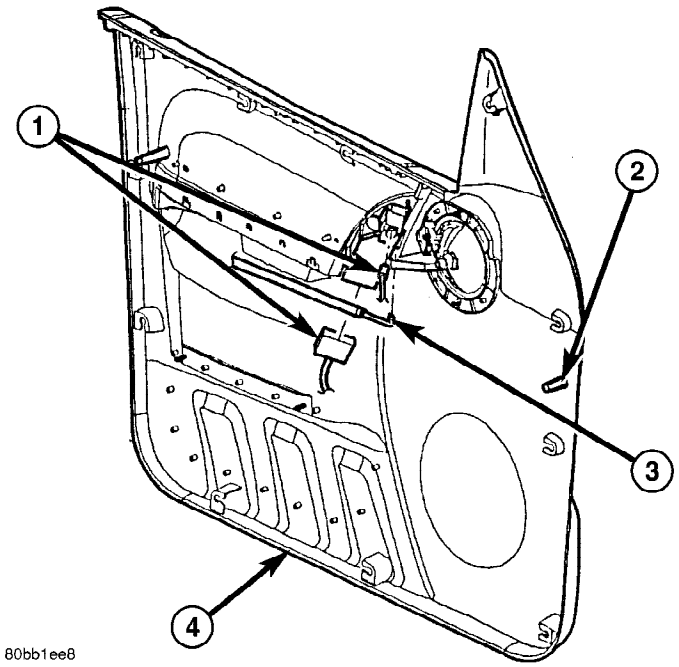

Fig. 10 TRIM PANEL CONNECTIONS

1 - ELECTRICAL CONNECTORS
2 - ALIGNMENT PINS
3 - LATCH ACTUATOR ROD
4 - TRIM PANEL

(1) Remove the door speaker. (Refer to 8 - ELECTRICAL/AUDIO/SPEAKER - REMOVAL)

(2) Separate the waterdam from the inner door panel and off of the latch linkages. (Fig. 11)

WATERDAM (Continued)

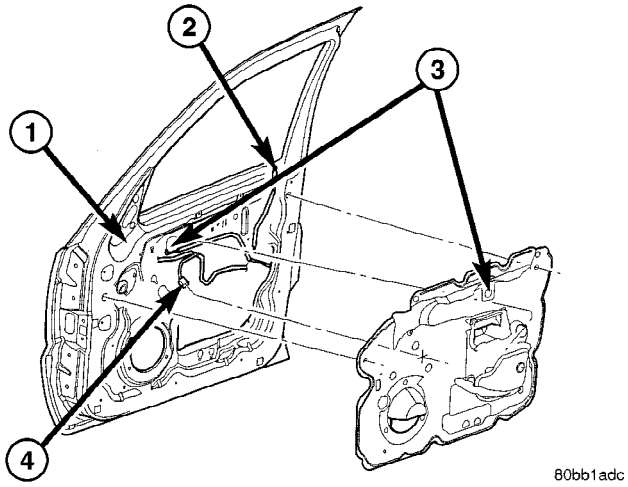

Fig. 11 FRONT DOOR WATERDAM

1 - DOOR
2 - LOCK KNOB ROD
3 - INSIDE HANDLE ACTUATOR ROD AND HOLE
4 - ELECTRICAL CONNECTOR

INSTALLATION

CAUTION: Do not allow the waterdam or adhesive to become contaminated with dirt or other foreign substances.
Do not damage the waterdam during removal and installation.
If the waterdam becomes contaminated or damaged, replace the waterdam.

(1) Position the wire harness and actuator rods through the holes in the waterdam.

(2) Place waterdam onto the door and pressurize at the butyl bead to seal completely, starting with the top rear locating indent and then moving to the top front locating indent followed by the remaining portion of the waterdam.

(3) Run a hard plastic squeegee firmly around the perimeter of the waterdam making sure that the drain holes at the bottom of the inner door panel are fully covered by the waterdam.

(4) Install the speaker. (Refer to 8 - ELECTRICAL/ AUDIO/SPEAKER - INSTALLATION)

WINDOW REGULATOR - MANUAL

REMOVAL

(1) Remove the waterdam. (Refer to 23 - BODY/ DOOR - FRONT/WATERDAM - REMOVAL)

(2) Raise the glass to the position shown and using a long flat blade or hook type tool, disengage clips attaching glass retainer to regulator lift plate. (Fig. 12)

(3) Disconnect the glass from the regulator lift plate and re-install the clips.

(4) Secure the glass in the up position using a wood wedge, tape or equivalent.

(5) Loosen the bolts. (Fig. 13)

(6) Disconnect the runout tube clip and remove the regulator.

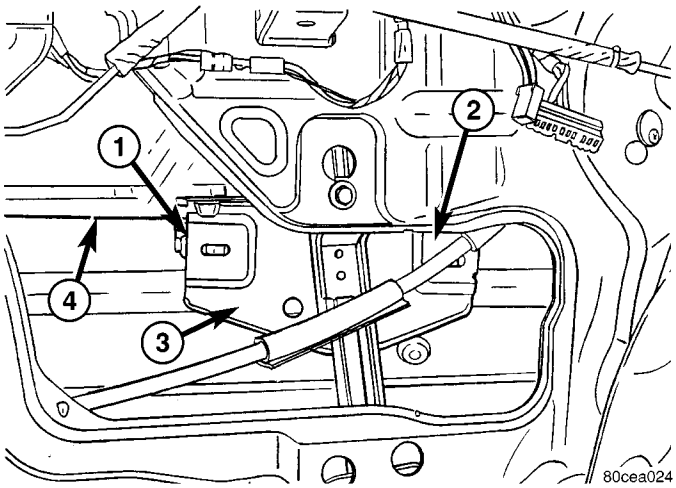

Fig. 12 DOOR GLASS/REGULATOR

1 - DOOR GLASS ATTACHMENT CLIP (2)
2 - DOOR OPENING
3 - REGULATOR LIFT PLATE
4 - DOOR GLASS

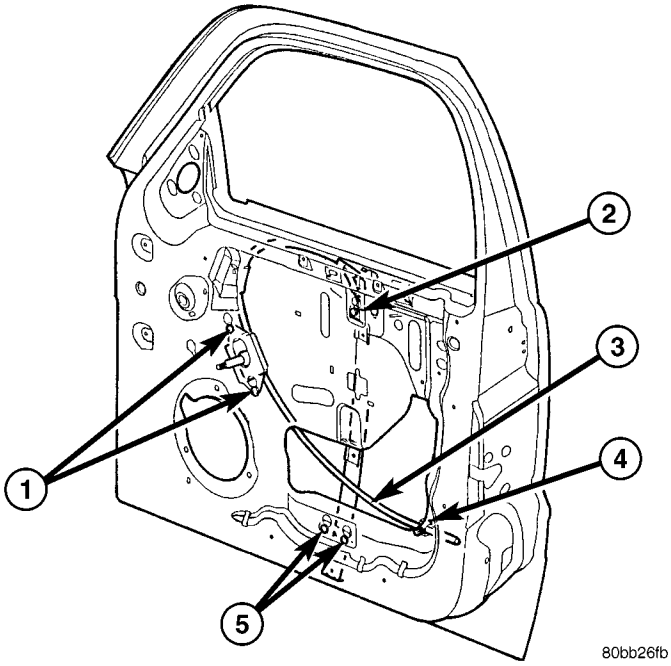

Fig. 13 FRONT DOOR REGULATOR - MANUAL

1 - BOLTS
2 - BOLTS
3 - RUNOUT TUBE
4 - RUNOUT TUBE CLIP
5 - BOLTS

WINDOW REGULATOR - MANUAL (Continued)

INSTALLATION

(1) Install the regulator assembly.

(2) Tighten the bolts to 9 N·m (80 in. lbs.) using the sequence shown. (Fig. 14)

(3) Remove the glass support and connect to the regulator lift plate.

(4) Install the waterdam. (Refer to 23 - BODY/ DOOR - FRONT/WATERDAM - INSTALLATION)

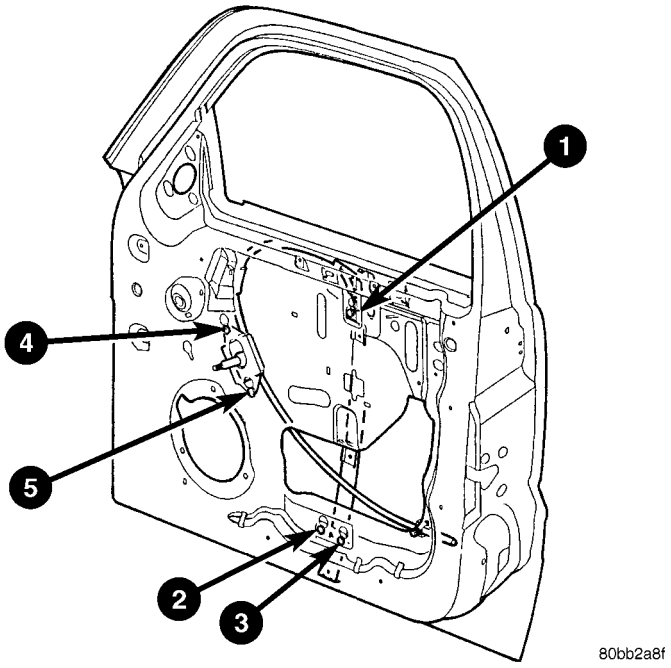

Fig. 14 REGULATOR TIGHTENING SEQUENCE - MANUAL

WINDOW REGULATOR - POWER

REMOVAL

(1) Remove the waterdam. (Refer to 23 - BODY/ DOOR - FRONT/WATERDAM - REMOVAL)

(2) Raise the glass to the position shown and using a long flat blade or hook type tool, disengage clips attaching glass retainer to regulator lift plate. (Fig. 15)

(3) Disconnect the glass from the regulator lift plate and re-install the clips.

(4) Secure the glass in the up position using a wood wedge, tape or equivalent.

(5) Loosen the bolts. (Fig. 16)

(6) Disconnect the runout tube clip.

(7) Disconnect the electrical connector and remove the regulator.

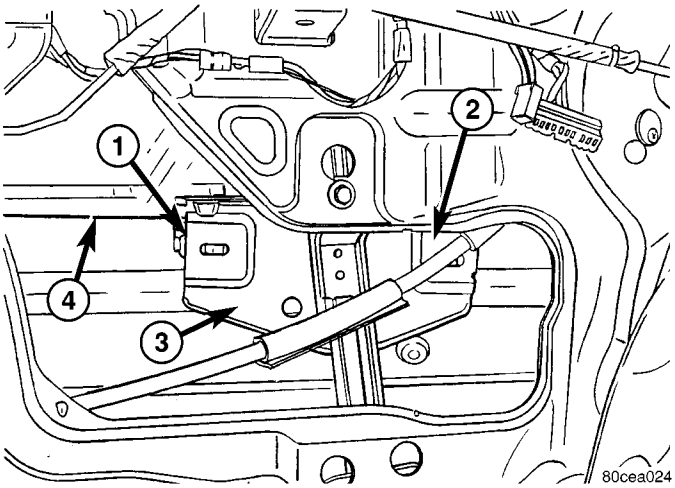

Fig. 15 DOOR GLASS/REGULATOR

1 - DOOR GLASS ATTACHMENT CLIP (2)
2 - DOOR OPENING
3 - REGULATOR LIFT PLATE
4 - DOOR GLASS

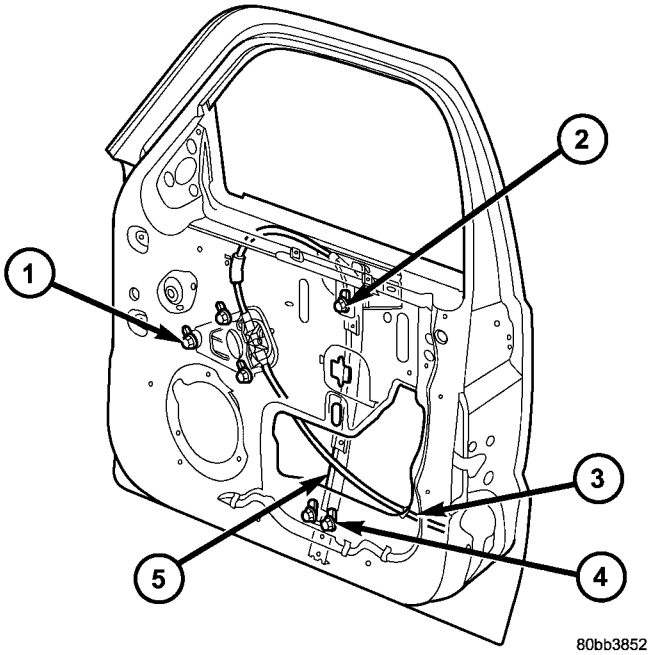

Fig. 16 WINDOW REGULATOR - ELECTRIC

1 - BOLTS (3)
2 - BOLT
3 - RUNOUT TUBE CLIP
4 - BOLTS (2)
5 - REGULATOR ASSEMBLY

WINDOW REGULATOR - POWER (Continued)

INSTALLATION

(1) Install the regulator assembly.
(2) Connect the electrical connector.
(3) Tighten the bolts to 9 N·m (80 in. lbs.) using the sequence shown. (Fig. 17)
(4) Connect the runout tube clip.
(5) Remove the glass support and connect to the regulator lift plate.
(6) Install the waterdam. (Refer to 23 - BODY/DOOR - FRONT/WATERDAM - INSTALLATION)

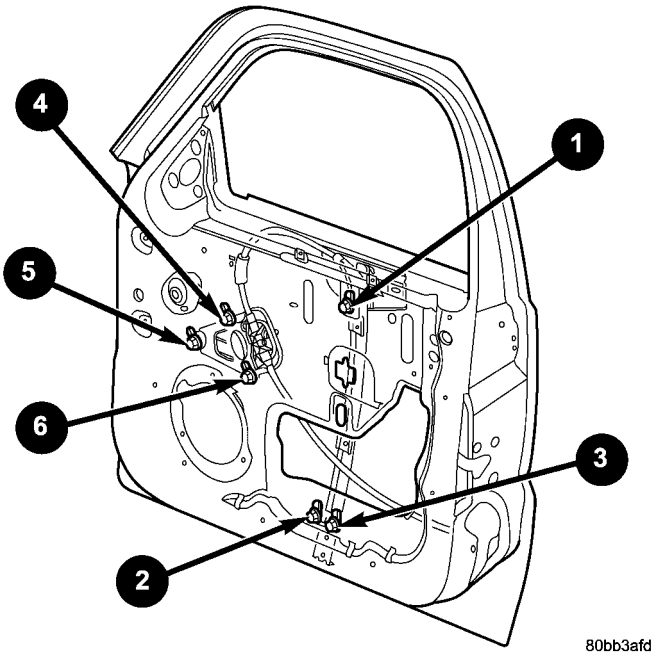

Fig. 17 REGULATOR TIGHTENING SEQUENCE - POWER

DOORS - REAR

TABLE OF CONTENTS

	page
CHECK STRAP	
REMOVAL	27
INSTALLATION	27
DOOR	
REMOVAL	28
INSTALLATION	28
ADJUSTMENTS	
ADJUSTMENT	28
DOOR GLASS	
REMOVAL	29
INSTALLATION	29
EXTERIOR HANDLE	
REMOVAL	30
INSTALLATION	30
GLASS RUN CHANNEL	
REMOVAL	30
INSTALLATION	31
HINGE	
REMOVAL	31
INSTALLATION	31
LATCH	
REMOVAL	31
INSTALLATION	31
ADJUSTMENTS	
ADJUSTMENT	32
LATCH STRIKER	
REMOVAL	32
INSTALLATION	32
TRIM PANEL	
REMOVAL	32
INSTALLATION	33
WATERDAM	
REMOVAL	33
INSTALLATION	33
WINDOW REGULATOR - MANUAL	
REMOVAL	33
INSTALLATION	34
WINDOW REGULATOR - POWER	
REMOVAL	34
INSTALLATION	35

CHECK STRAP

REMOVAL

(1) Remove the waterdam. (Refer to 23 - BODY/DOORS - REAR/WATERDAM - REMOVAL)

(2) Remove screws attaching door check to b-pillar.

(3) Remove the two nuts and remove the door check strap. (Fig. 1)

INSTALLATION

NOTE: Make sure the proper orientation of the check strap is maintained using the part number printed on the side. The part number should face inboard toward the interior of the vehicle.

(1) Install the check strap through the speaker hole.

(2) Install the nuts and tighten to 12 N·m (9 ft. lbs.).

(3) Connect the strap to the b-pillar and tighten the bolts to 12 N·m (9 ft. lbs.).

(4) Install the waterdam. (Refer to 23 - BODY/DOORS - REAR/WATERDAM - INSTALLATION)

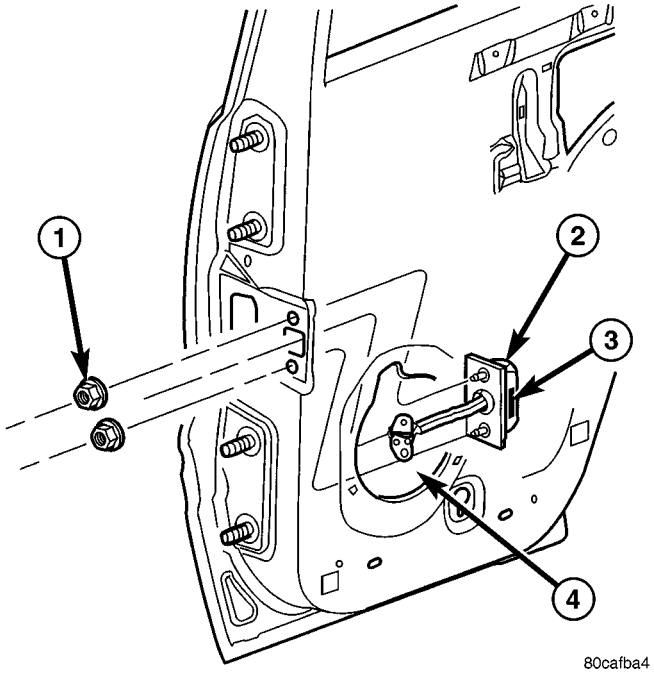

Fig. 1 CHECK STRAP

1 - NUTS
2 - CHECK STRAP
3 - PART NUMBER (FACES INBOARD)
4 - SPEAKER OPENING

DOOR

REMOVAL

(1) Disconnect the door wire harness electrical connector at the b-pillar.

(2) Disconnect the check strap from the b-pillar. (Refer to 23 - BODY/DOORS - REAR/CHECK STRAP - REMOVAL)

(3) Support the door with a suitable lifting device.

NOTE: The epoxy washers should not be removed from the hinge. If the washers are removed the door may have to be re-adjusted.

(4) Remove the nuts attaching the door hinges to the door. (Fig. 2)

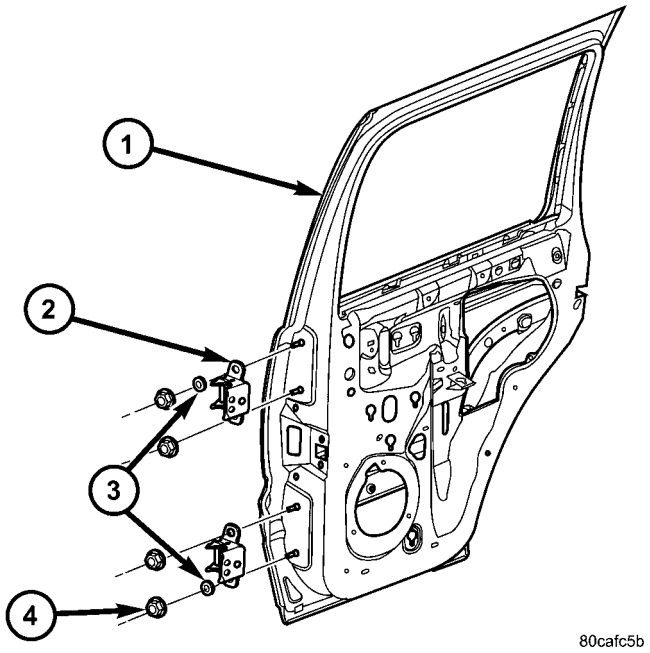

Fig. 2 HINGES

1 - DOOR
2 - HINGES
3 - EPOXY WASHERS (2) (NOT REMOVABLE)
4 - NUTS

INSTALLATION

(1) Support the door with a suitable lifting device and install the door onto the b-pillar.

(2) Install the nuts, washers and tighten to 23 N·m (17 ft. lbs.).

(3) Connect the door wire harness electrical connector.

(4) Connect the check strap to the b-pillar. (Refer to 23 - BODY/DOORS - REAR/CHECK STRAP - INSTALLATION)

(5) Adjust the door as necessary. (Refer to 23 - BODY/BODY STRUCTURE/GAP AND FLUSH - SPECIFICATIONS)

ADJUSTMENTS

ADJUSTMENT

NOTE: For vehicles equipped with four doors, it is recommended that you adjust the rear door before adjusting the front door.

- **Door adjustment measurements should be taken from stationary or welded body panels like the roof, rocker or quarter panels.**
- **During adjustment procedures, it is recommended that all the hinge fasteners be loosened except for the upper most fasteners. Adjustments can be made using the upper fasteners to hold the door with final torque of the fasteners occurring after correct door positioning is achieved.**

FORE/AFT

NOTE: Fore/aft (lateral) door adjustment is done by loosening the hinge to the hinge pillar fasteners one hinge at a time and moving the door to the correct position.

(1) Support the door with a suitable lifting device.

(2) Loosen the hinge to hinge pillar fasteners. (Refer to 23 - BODY/DOORS - REAR/HINGE - REMOVAL)

(3) Adjust the door to the correct position. (Refer to 23 - BODY/BODY STRUCTURE/GAP AND FLUSH - SPECIFICATIONS)

(4) Tighten to hinge pillar fasteners to 28 N·m (21 ft. lbs.). (Refer to 23 - BODY/DOORS - REAR/HINGE - INSTALLATION)

NOTE: Use a suitable body sealer on the hinge to body mating surfaces.

UP/DOWN

NOTE: Up/down door adjustment is done by loosening either the hinge to the hinge pillar fasteners or the hinge to door fasteners and moving the door to the correct position.

NOTE: When adjustment of the door requires the loosening of the door to hinge fasteners, it will be necessary to separate the epoxy bonded washers with a chisel or other suitable tool.

DOOR (Continued)

NOTE: When the up/down adjustments are done correctly, the top of the door is positioned over flush to the roof. (Refer to 23 - BODY/BODY STRUCTURE/GAP AND FLUSH - SPECIFICATIONS)

(1) Support the door with a suitable lifting device.
(2) Remove the latch striker. (Refer to 23 - BODY/DOORS - REAR/LATCH STRIKER - REMOVAL)
(3) Loosen the hinge to hinge pillar fasteners (Refer to 23 - BODY/DOORS - REAR/HINGE - REMOVAL) or loosen the hinge to door fasteners (Refer to 23 - BODY/DOORS - REAR/DOOR - REMOVAL).
(4) Adjust the door to the correct position. (Refer to 23 - BODY/BODY STRUCTURE/GAP AND FLUSH - SPECIFICATIONS)
(5) Tighten to hinge pillar fasteners or the door to hinges fasteners and fasteners to 28 N·m (21 ft. lbs.). (Refer to 23 - BODY/DOORS - REAR/HINGE - INSTALLATION)
(6) Install the latch striker. (Refer to 23 - BODY/DOORS - REAR/LATCH STRIKER - INSTALLATION)

IN/OUT

NOTE: In/out door adjustment is done by loosening the hinge to door fasteners one hinge at a time and moving the door to the correct position.

NOTE: When adjustment of the door requires the loosening of the door to hinge fasteners, it will be necessary to separate the epoxy bonded washers with a chisel or other suitable tool.

(1) Support the door with a suitable lifting device.
(2) Remove the latch striker. (Refer to 23 - BODY/DOORS - REAR/LATCH STRIKER - REMOVAL)
(3) Loosen the hinge to door fasteners. (Refer to 23 - BODY/DOORS - REAR/DOOR - REMOVAL)
(4) Adjust the front of the door to the correct position. (Refer to 23 - BODY/BODY STRUCTURE/GAP AND FLUSH - SPECIFICATIONS)
(5) Tighten the door to hinges fasteners to 28 N·m (21 ft. lbs.).
(6) Install the latch striker. (Refer to 23 - BODY/DOORS - REAR/LATCH STRIKER - INSTALLATION)

DOOR GLASS

REMOVAL

(1) Remove the waterdam. (Refer to 23 - BODY/DOORS - REAR/WATERDAM - REMOVAL)
(2) Raise the glass and line up the lift plate clip with the hole in the door panel shown. (Fig. 3)
(3) Using a long flat blade or hook type tool, disengage the clip attaching glass retainer to regulator lift plate.

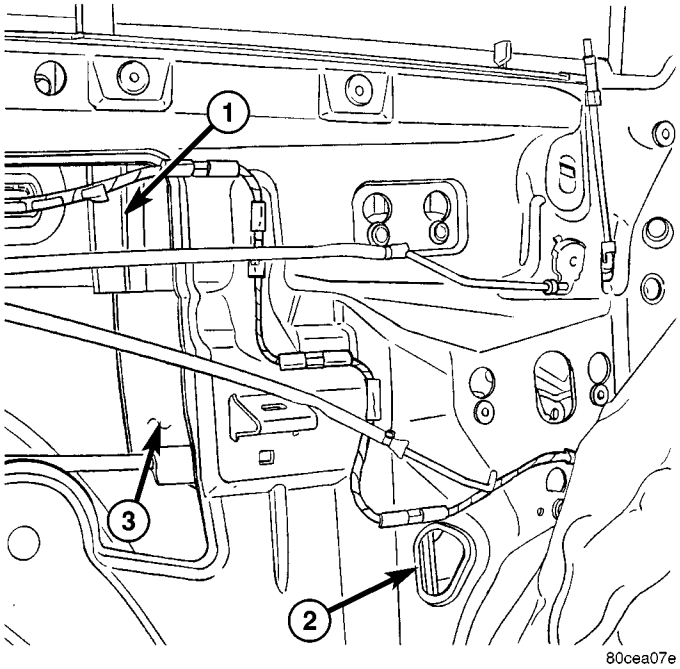

Fig. 3 DOOR GLASS POSITION

1 - GLASS DIVISION BAR
2 - DOOR PANEL SIGHT HOLE
3 - DOOR GLASS

(4) Disconnect the glass from the regulator lift plate and re-install the clip.
(5) Position the glass into the bottom of the door.
(6) Remove the glass division bar bolt. (Fig. 4)
(7) Twist the division bar towards the inside of the door and disengage the door glass.
(8) Remove the glass from the window opening.

INSTALLATION

(1) Install the glass through the window opening.
(2) Position the front of the glass into the glass run channel and as low as possible in the door.
(3) Twist the glass division bar towards the inside of the door and position the door glass into the rear run channel.
(4) Seat the division bar firmly up and into the fixed door glass, making sure the seal is well engaged into the door frame with no gap inside the car and no folded lip on the c-pillar.

DOOR GLASS (Continued)

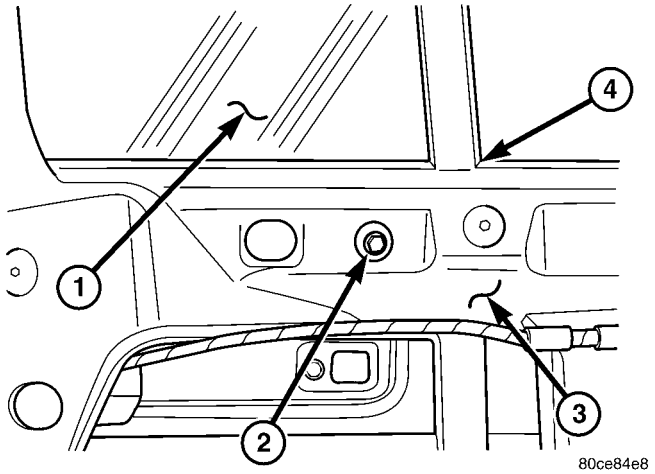

Fig. 4 GLASS DIVISION BAR

1 - STATIONARY DOOR GLASS
2 - DIVISION BAR BOLT (1)
3 - DOOR
4 - GLASS DIVISION BAR

(5) Lift glass up in the window and engage the pin into the regulator lift plate.

(6) Raise the glass into the closed position and install the division bar bolt.

(7) Tighten the bolt to 9 N·m (80 in. lbs.).

(8) Install the waterdam. (Refer to 23 - BODY/DOORS - REAR/WATERDAM - INSTALLATION)

EXTERIOR HANDLE

REMOVAL

(1) Remove the waterdam as necessary to gain access to the handle. (Refer to 23 - BODY/DOORS - REAR/WATERDAM - REMOVAL)

(2) Disconnect the handle rod at the handle.

(3) Remove the nuts and remove the handle. (Fig. 5)

INSTALLATION

(1) Install the handle.

(2) Install the nuts and tighten to 6 N·m (55 in. lbs.).

(3) Connect the handle rod at the handle.

(4) Install the waterdam. (Refer to 23 - BODY/DOORS - REAR/WATERDAM - INSTALLATION)

GLASS RUN CHANNEL

REMOVAL

(1) Remove the outer belt molding. (Refer to 23 - BODY/WEATHERSTRIP/SEALS/REAR DOOR OUTER BELT MOLDING - REMOVAL)

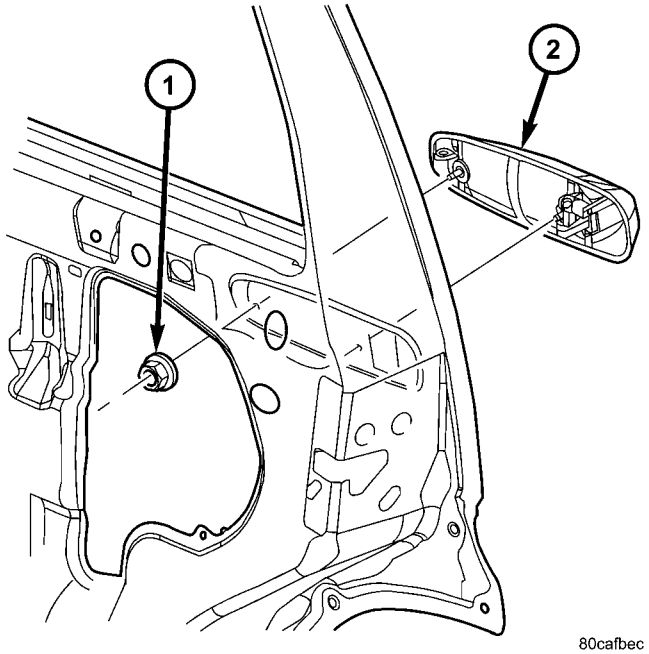

Fig. 5 EXTERIOR HANDLE

1 - NUTS (2)
2 - EXTERIOR HANDLE

(2) Remove the door glass. (Refer to 23 - BODY/DOORS - REAR/DOOR GLASS - REMOVAL)

(3) Remove the front and rear bolts. (Fig. 6)

(4) Peal the weatherstrip and quarter glass out of the door frame and remove the run channel through the window opening as an assembly.

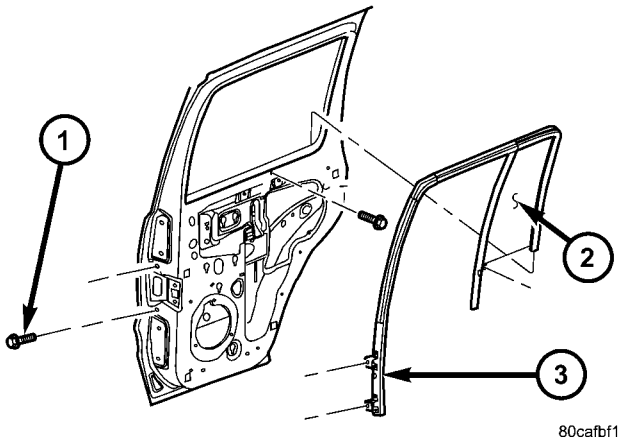

Fig. 6 GLASS RUN CHANNEL

1 - BOLTS (3)
2 - QUARTER GLASS
3 - GLASS RUN CHANNEL ASSEMBLY

GLASS RUN CHANNEL (Continued)

INSTALLATION

(1) Install the run channel and quarter glass assembly through the window opening and into the door frame.

(2) Install the front, rear bolts and tighten to 9 N·m (80 in. lbs.).

(3) Install the door glass. (Refer to 23 - BODY/DOORS - REAR/DOOR GLASS - INSTALLATION)

(4) Install the outer belt molding. (Refer to 23 - BODY/WEATHERSTRIP/SEALS/REAR DOOR OUTER BELT MOLDING - INSTALLATION)

HINGE

REMOVAL

(1) Remove the door. (Refer to 23 - BODY/DOORS - REAR/DOOR - REMOVAL)

(2) Remove the upper b-pillar trim. (Refer to 23 - BODY/INTERIOR/B-PILLAR UPPER TRIM - REMOVAL)

(3) Remove the two door hinge bolts from the inside of the b-pillar.

(4) Remove the exterior bolts attaching the door hinges to the b-pillar.

INSTALLATION

(1) Install the hinges.

(2) Install the exterior bolts and tighten to 28 N·m (21 ft. lbs.).

(3) Install the two inner hinge bolts and tighten to 28 N·m (21 ft. lbs.).

(4) Install the door. (Refer to 23 - BODY/DOORS - REAR/DOOR - INSTALLATION)

(5) Adjust the door as necessary. (Refer to 23 - BODY/BODY STRUCTURE/GAP AND FLUSH - SPECIFICATIONS)

(6) Install the upper b-pillar trim. (Refer to 23 - BODY/INTERIOR/B-PILLAR UPPER TRIM - INSTALLATION)

LATCH

REMOVAL

(1) Remove the waterdam as necessary to gain access to the latch. (Refer to 23 - BODY/DOORS - REAR/WATERDAM - REMOVAL)

(2) Disconnect the lock knob rod at the bell crank and the outside handle rod at the outside door handle.

(3) Remove the screws and remove the latch assembly. (Fig. 7)

(4) Disconnect the electrical connectors.

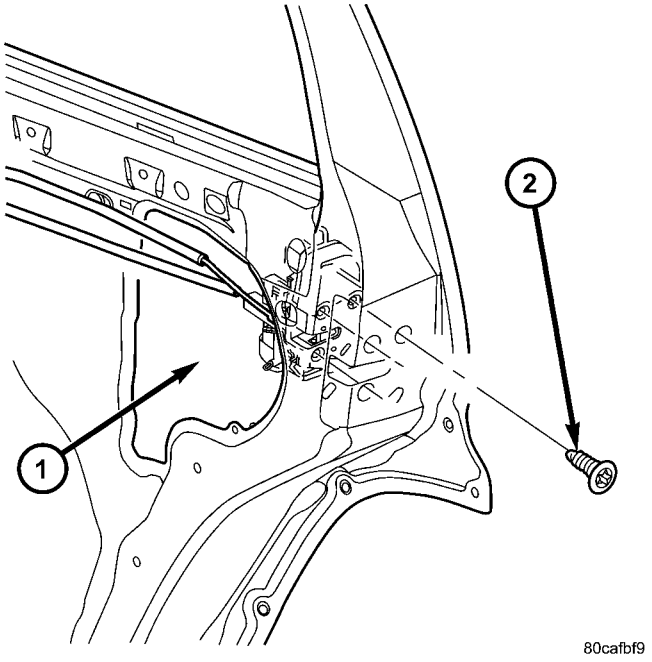

Fig. 7 LATCH

1 - LATCH
2 - SCREWS (3)

INSTALLATION

(1) Connect the latch electrical connectors.

(2) Install the latch assembly into the door and install the screws.

(3) Tighten the latch screws to 11 N·m (95 in. lbs.).

(4) Connect the outside door handle rod at the outside door handle.

(5) Connect the lock knob rod at the bell crank and the inside handle rod when installing the trim panel.

(6) Install the waterdam. (Refer to 23 - BODY/DOORS - REAR/WATERDAM - INSTALLATION)

(7) Adjust the latch as needed. (Refer to 23 - BODY/DOORS - REAR/LATCH - ADJUSTMENTS)

LATCH (Continued)

ADJUSTMENTS

ADJUSTMENT

(1) Locate access hole and remove the mylar tape covering it. (Fig. 8)

(2) Insert a 5/32-inch hex-wrench through hole and into adjustment screw. Loosen screw.

(3) Operate outside handle several times to release any restriction because of mis-alignment.

(4) Tighten adjustment screw to 3 N·m (30 in. lbs.).

(5) Test handle for proper operation.

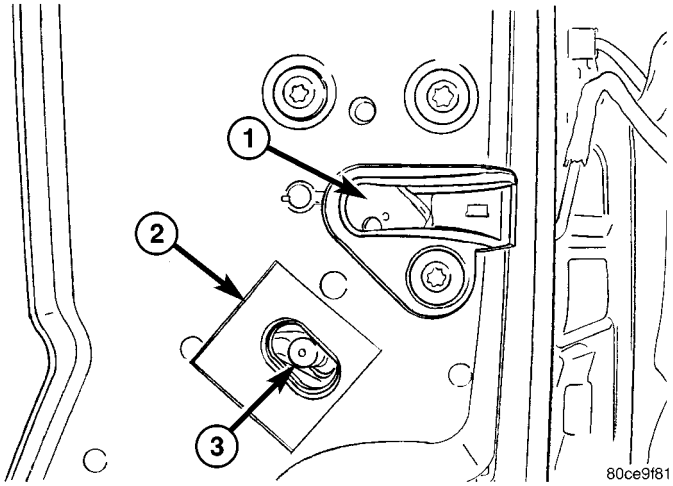

Fig. 8 LATCH ADJUSTMENT SCREW - TYPICAL

1 - DOOR LATCH
2 - MYLAR TAPE
3 - ADJUSTMENT SCREW

LATCH STRIKER

REMOVAL

(1) Remove the bolts. (Fig. 9)

(2) Remove the latch striker and the spacer, if equipped.

INSTALLATION

(1) Install the striker and spacer, if required.

(2) Install the bolts and tighten to 28 N·m (21 ft. lbs.).

(3) Adjust the door as necessary. (Refer to 23 - BODY/BODY STRUCTURE/GAP AND FLUSH - SPECIFICATIONS)

TRIM PANEL

REMOVAL

(1) Remove the inside handle screw plug and remove the screw. (Fig. 10)

(2) Remove the pull handle screw.

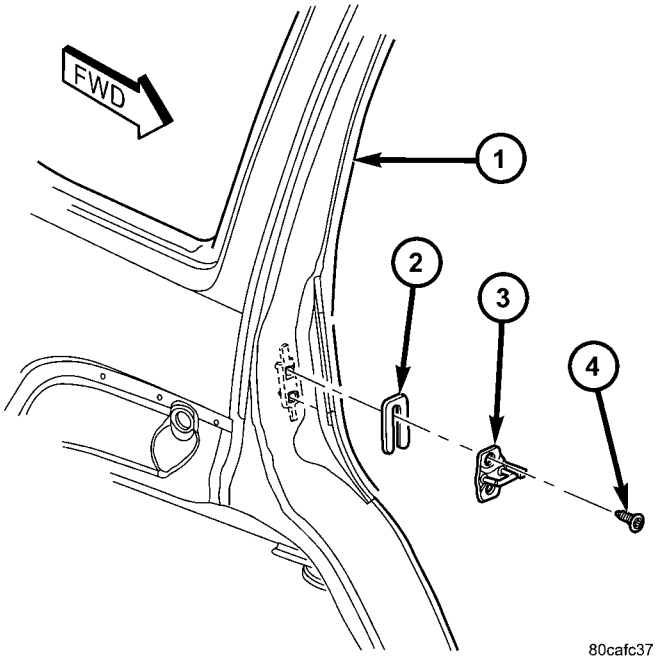

Fig. 9 LATCH STRIKER

1 - C-PILLAR
2 - SPACER
3 - STRIKER
4 - SCREWS

(3) Using a trim stick C-4755 or equivalent, disengage the trim panel clips and remove the trim panel.

(4) Disconnect the electrical connectors and the inside handle actuator rod. (Fig. 11)

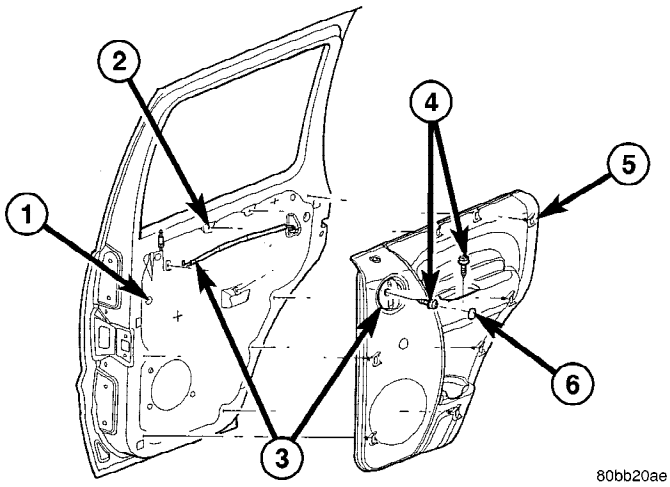

Fig. 10 A REAR TRIM PANEL

1 - WATERDAM
2 - TRIM PANEL CLIP HOLES
3 - INTERIOR HANDLE AND ACTUATOR ROD
4 - SCREWS (2)
5 - TRIM PANEL CLIPS
6 - INTERIOR HANDLE SCREW PLUG

TRIM PANEL (Continued)

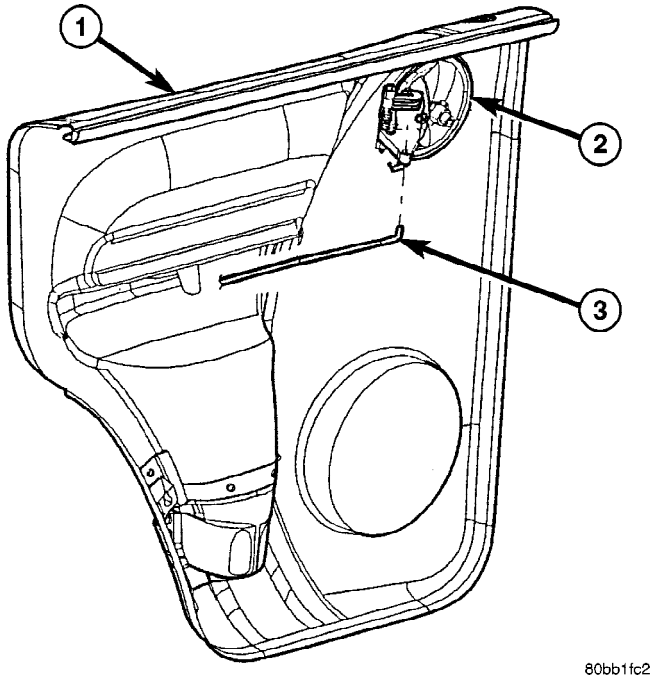

Fig. 11 A REAR DOOR TRIM PANEL CONNECTIONS

1 - TRIM PANEL
2 - INTERIOR LATCH HANDLE
3 - LATCH ACTUATOR ROD

INSTALLATION

(1) Connect the inside handle actuator rod and the electrical connectors.

(2) Position the trim panel and seat the clips fully.

(3) Instal the screws and install the screw plug.

WATERDAM

REMOVAL

CAUTION: Do not allow the waterdam or adhesive to become contaminated with dirt or other foreign substances.
Do not damage the waterdam during removal and installation.
If the waterdam becomes contaminated or damaged, replace the waterdam.

(1) Remove the door speaker. (Refer to 8 - ELECTRICAL/AUDIO/SPEAKER - REMOVAL)

(2) Separate the waterdam from the inner door panel and off of the latch linkages. (Fig. 12)

INSTALLATION

CAUTION: Do not allow the waterdam or adhesive to become contaminated with dirt or other foreign substances.
Do not damage the waterdam during removal and installation.
If the waterdam becomes contaminated or damaged, replace the waterdam.

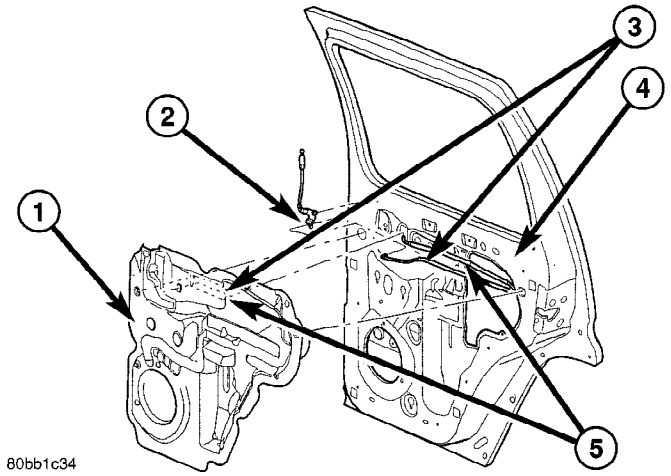

Fig. 12 REAR DOOR WATERDAM

1 - WATERDAM
2 - LOCK ACTUATOR RODS
3 - LOCK ACTUATOR ROD AND HOLES
4 - DOOR
5 - INSIDE HANDLE ACTUATOR ROD AND HOLES

(1) Position the actuator rods through the holes in the waterdam.

(2) Place waterdam onto the door and pressurize at the butyl bead to seal completely, starting with the top rear locating indent and then moving to the top front locating indent followed by the remaining portion of the waterdam.

(3) Run a hard plastic squeegee firmly around the perimeter of the waterdam making sure that the drain holes at the bottom of the inner door panel are fully covered by the waterdam.

(4) Install the door speaker. (Refer to 8 - ELECTRICAL/AUDIO/SPEAKER - INSTALLATION)

WINDOW REGULATOR - MANUAL

REMOVAL

(1) Remove the waterdam. (Refer to 23 - BODY/DOORS - REAR/WATERDAM - REMOVAL)

(2) Raise the glass and line up the lift plate clip with the hole in the door panel shown. (Fig. 13)

(3) Using a long flat blade or hook type tool, disengage the clip attaching glass retainer to regulator lift plate.

(4) Disconnect the glass from the regulator lift plate and re-install the clip.

(5) Secure the glass in the up position using a wood wedge, tape or equivalent.

(6) Remove the bolts. (Fig. 14)

WINDOW REGULATOR - MANUAL (Continued)

(7) Disconnect the runout tube clip and remove the regulator.

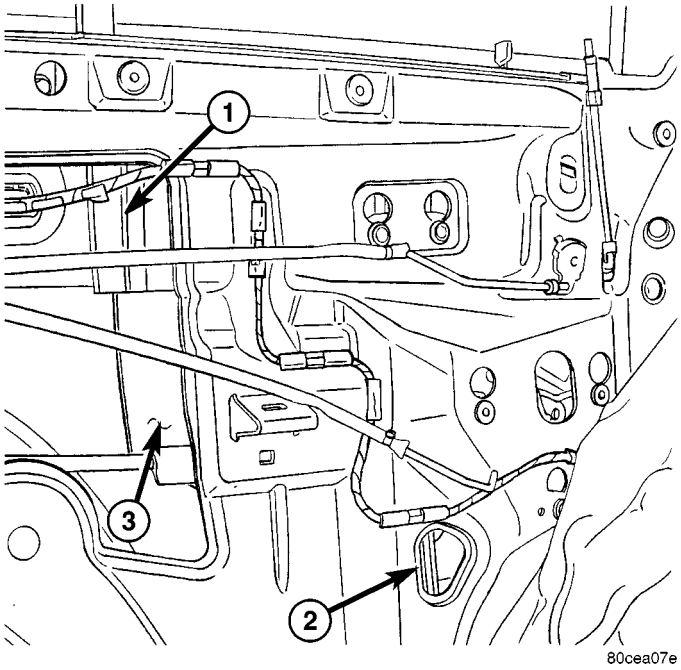

Fig. 13 DOOR GLASS POSITION

1 - GLASS DIVISION BAR
2 - DOOR PANEL SIGHT HOLE
3 - DOOR GLASS

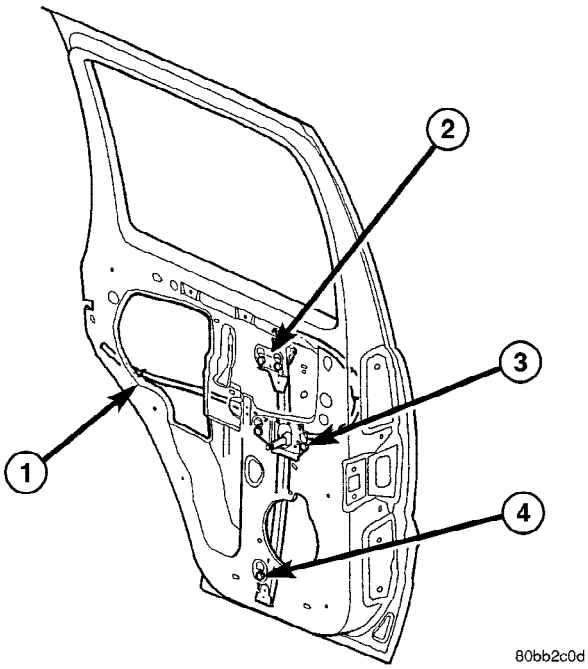

Fig. 14 WINDOW REGULATOR - MANUAL

1 - RUNOUT TUBE CLIP
2 - BOLTS (2)
3 - BOLTS (2)
4 - BOLT (1)

INSTALLATION

(1) Loosely install the bolts onto the regulator assembly.

(2) Install the regulator assembly.

(3) Install the runout tube clip.

(4) Tighten the bolts to 9 N·m (80 in. lbs.) using the sequence shown. (Fig. 15)

(5) Remove the glass support and connect to the regulator lift plate.

(6) Install the waterdam. (Refer to 23 - BODY/DOORS - REAR/WATERDAM - INSTALLATION)

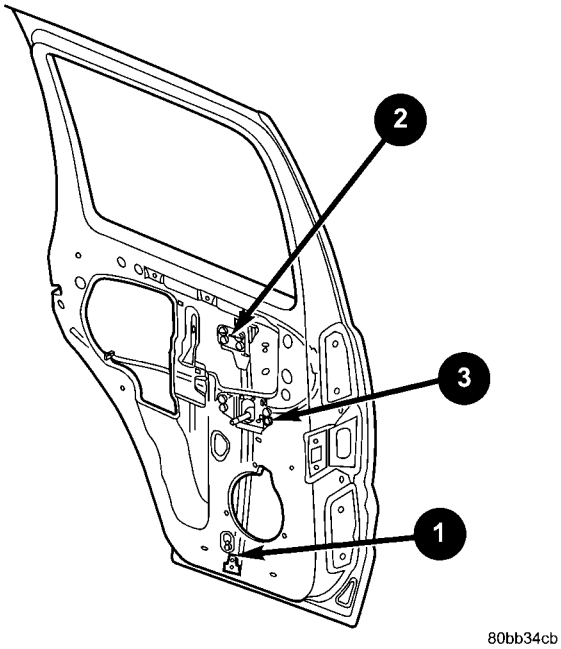

Fig. 15 REGULATOR TIGHTEN SEQUENCE - MANUAL

WINDOW REGULATOR - POWER

REMOVAL

(1) Remove the waterdam. (Refer to 23 - BODY/DOORS - REAR/WATERDAM - REMOVAL)

(2) Raise the glass and line up the lift plate clip with the hole in the door panel shown. (Fig. 16)

(3) Using a long flat blade or hook type tool, disengage the clip attaching glass retainer to regulator lift plate.

(4) Disconnect the glass from the regulator lift plate and re-install the clip.

(5) Secure the glass in the up position using a wood wedge, tape or equivalent.

(6) Remove the bolts. (Fig. 17)

(7) Disconnect the runout tube clip and remove the regulator.

(8) Disconnect the electrical connector.

WINDOW REGULATOR - POWER (Continued)

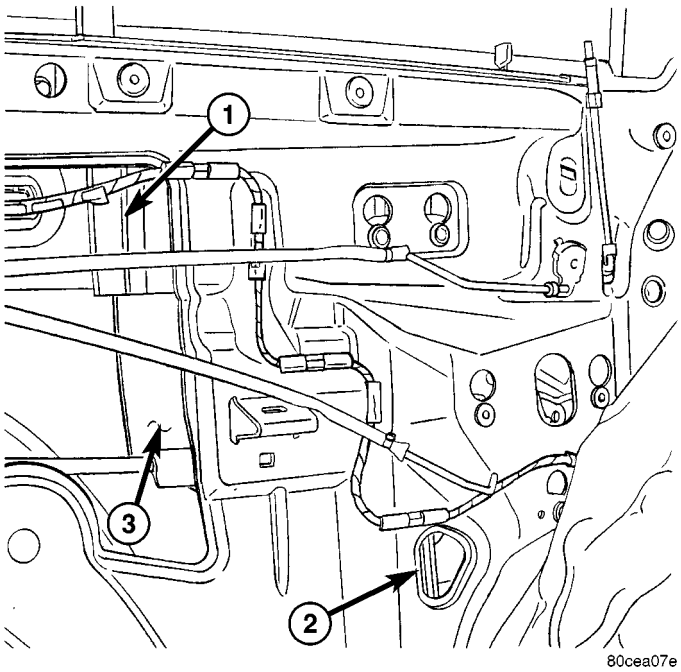

Fig. 16 DOOR GLASS POSITION

1 - GLASS DIVISION BAR
2 - DOOR PANEL SIGHT HOLE
3 - DOOR GLASS

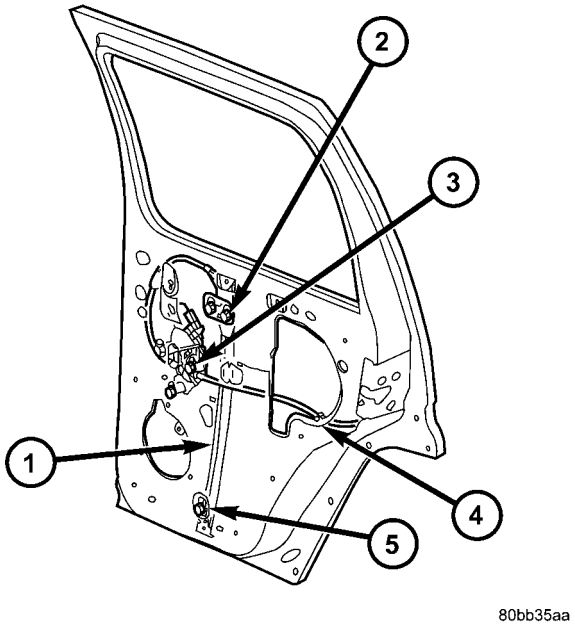

Fig. 17 WINDOW REGULATOR - REAR

1 - REGULATOR ASSEMBLY
2 - BOLTS (2)
3 - BOLTS (2)
4 - RUNOUT TUBE CLIP
5 - BOLT

INSTALLATION

(1) Connect the electrical connector.

(2) Loosely install the bolts onto the regulator assembly.

(3) Install the regulator assembly.

(4) Tighten the bolts to 9 N·m (80 in. lbs.) using the sequence shown. (Fig. 18)

(5) Remove the glass support and connect to the regulator lift plate.

(6) Install the waterdam. (Refer to 23 - BODY/DOORS - REAR/WATERDAM - INSTALLATION)

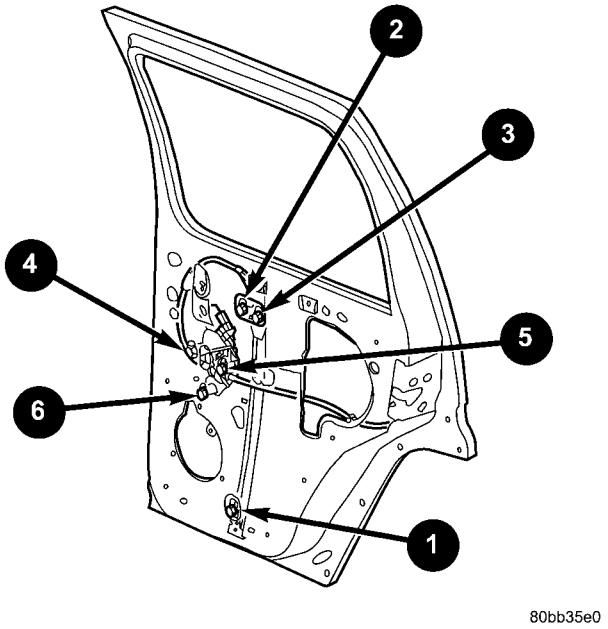

Fig. 18 REGULATOR TIGHTENING SEQUENCE - POWER

SWING GATE

TABLE OF CONTENTS

page

FLIP-UP GLASS
REMOVAL 36
INSTALLATION 36
ADJUSTMENTS
ADJUSTMENT 36
FLIP-UP GLASS LATCH
REMOVAL 37
INSTALLATION 37
FLIP-UP GLASS - HINGE
REMOVAL 37
INSTALLATION 38
FLIP-UP GLASS - HINGE COVER
REMOVAL 38
INSTALLATION 38
FLIP-UP GLASS SUPPORT CYLINDER
REMOVAL 39
INSTALLATION 39
TRIM PANEL
REMOVAL 40
INSTALLATION 40
LATCH
REMOVAL 40
INSTALLATION 40
LATCH STRIKER
REMOVAL 41
INSTALLATION 41
ADJUSTMENTS
ADJUSTMENT 41

page

LATCH - ACCESS PANEL
DESCRIPTION 41
REMOVAL 41
INSTALLATION 41
EXTERIOR HANDLE
REMOVAL 41
INSTALLATION 41
LOCK CYLINDER
REMOVAL 42
INSTALLATION 42
CHECK STRAP
REMOVAL 42
INSTALLATION 42
STABILIZER WEDGE/INSERT
REMOVAL 43
INSTALLATION 43
ADJUSTMENTS
ADJUSTMENT 44
HINGE
REMOVAL 44
INSTALLATION 44
SWING GATE
REMOVAL 45
INSTALLATION 45
ADJUSTMENTS
ADJUSTMENT 45

FLIP-UP GLASS

REMOVAL

(1) Open the flip-up glass and disconnect the electrical connectors.

(2) Remove the support cylinders. (Refer to 23 - BODY/SWING GATE/FLIP-UP GLASS SUPPORT CYLINDER - REMOVAL)

(3) Open the glass to the full travel with the support cylinders off.

(4) Remove the bolts and remove the glass. (Fig. 1)

INSTALLATION

(1) Install the flip-up glass, pushing it as far up as it can go and loosely install the hinge bolts.

(2) Adjust flip-up glass fit if necessary, making sure there are equal gaps on both sides of the glass while pushing up on the glass and tighten the hinge bolts to 7 N·m (60 in. lbs.). (Refer to 23 - BODY/SWING GATE/FLIP-UP GLASS - ADJUSTMENTS)

(3) Install the support cylinders. (Refer to 23 - BODY/SWING GATE/FLIP-UP GLASS SUPPORT CYLINDER - INSTALLATION)

(4) Connect the electrical connectors.

ADJUSTMENTS

ADJUSTMENT

(1) Verify that the flip-up glass is correctly centered in it's opening. (Refer to 23 - BODY/BODY STRUCTURE/GAP AND FLUSH - SPECIFICATIONS)

(2) Confirm the flip-up glass to swing gate adjustment. Hold a straight edge flush against the glass as indicated, and record the gap/space between the straight edge and the swing gate outer vertical panel. (Fig. 2)

FLIP-UP GLASS (Continued)

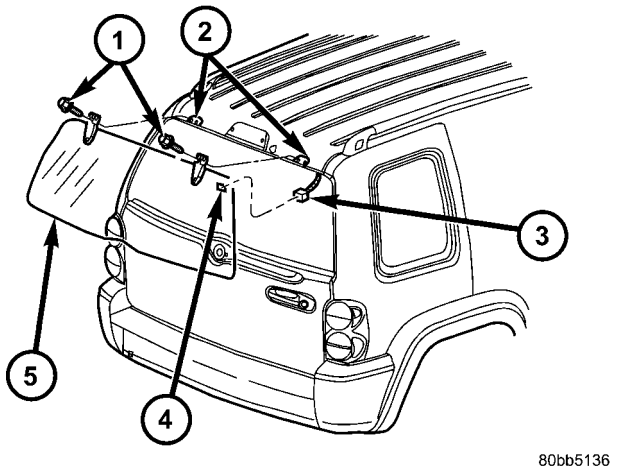

Fig. 1 FLIP-UP GLASS

1 - BOLTS (4)
2 - HINGE MOUNTING HOLES
3 - DEFROSTER WIRE HARNESS
4 - DEFROSTER ELECTRICAL CONNECTOR
5 - FLIPPER GLASS

NOTE: The flush specification for the flip-up glass to the swing gate outer panel is 0mm - 2mm over flush.

(3) If the flip-up glass needs to be adjusted, loosen the two latch attaching fasteners and move the latch for or aft in small increments until desired measurement is achieved. (Fig. 3)

(4) Tighten the flip-up glass fasteners to 12 N·m (9 ft. lbs.).

(5) Verify correct flip-up glass closing efforts and operation.

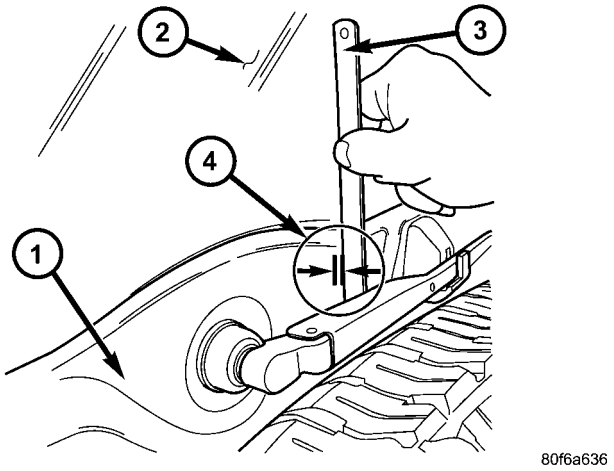

Fig. 2 FLIP-UP GLASS ADJUSTMENT TO GATE

1 - SWING GATE
2 - FLIP-UP GLASS
3 - STRAIGHT EDGE HELD FLUSH AGAINST GLASS
4 - LOCATION WHERE MEASUREMENT IS TO BE TAKEN

FLIP-UP GLASS LATCH

REMOVAL

(1) Remove the trim panel. (Refer to 23 - BODY/SWING GATE/TRIM PANEL - REMOVAL)

(2) Disconnect the electrical connectors. (Fig. 3)

(3) Using a grease pencil or equivalent, mark the location of the latch assembly for installation.

(4) Remove the nuts and remove the latch assembly.

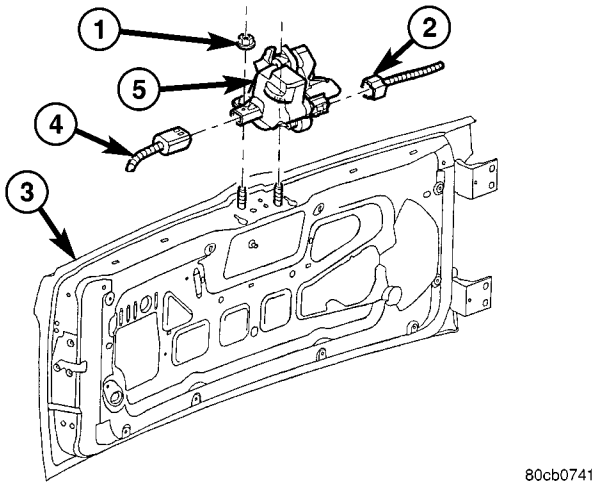

Fig. 3 FLIP-UP GLASS LATCH

1 - NUTS (2)
2 - ELECTRICAL CONNECTOR
3 - SWING GATE
4 - ELECTRICAL CONNECTOR
5 - FLIP-UP GLASS LATCH

INSTALLATION

(1) Install the latch assembly.

(2) Install the nuts and tighten to 12 N·m (9 ft. lbs.).

(3) Connect the electrical connectors.

(4) Adjust the latch to achieve the best glass fit. (Refer to 23 - BODY/SWING GATE/FLIP-UP GLASS - ADJUSTMENTS)

(5) Install the trim panel. (Refer to 23 - BODY/SWING GATE/TRIM PANEL - INSTALLATION)

FLIP-UP GLASS - HINGE

REMOVAL

NOTE: It is not necessary to remove the glass to replace one or both hinges. The hinges can be replaced one at a time.

(1) Open the flip up glass.

(2) Using a grease pencil or equivalent, mark the position of the hinge on the body to aid installation.

FLIP-UP GLASS - HINGE (Continued)

(3) Remove the support cylinders and support glass. (Refer to 23 - BODY/SWING GATE/FLIP-UP GLASS SUPPORT CYLINDER - REMOVAL)

CAUTION: Do not allow glass to twist on remaining hinge when the other hinge is being serviced. Damage to the hinge that is not being serviced may result.

(4) Remove the bolts and remove the hinge. (Fig. 4)

(5) Using a trim stick C-4755 or equivalent, release the lower locking tabs and remove the hinge cover. (Fig. 5)

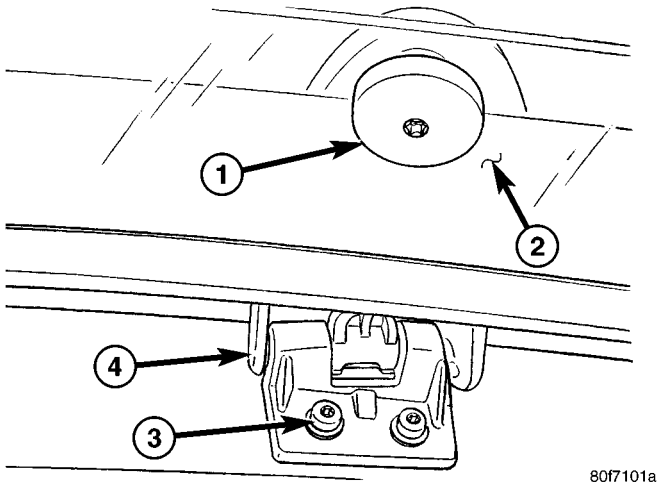

Fig. 4 FLIP-UP GLASS - HINGE

1 - GLASS BOLT
2 - FLIP-UP GLASS
3 - BODY BOLTS
4 - HINGE

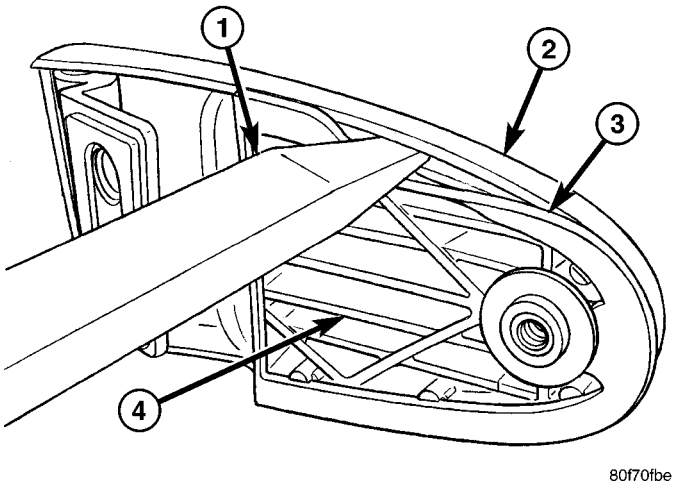

Fig. 5 HINGE COVER REMOVAL

1 - TRIM STICK
2 - HINGE COVER
3 - HINGE GASKET
4 - HINGE

INSTALLATION

NOTE: Inspect the hinge cover retention tabs. If they are damaged or cracked, discard the cover and replace with a new one.

(1) Install the hinge onto the vehicle and align with marks made previously.

(2) Install the hinge to glass bolt and tighten to 10 N·m (90 in. lbs.).

(3) Install the bolts and tighten to 7 N·m (60 in. lbs.).

(4) Adjust the flip-up glass as necessary. (Refer to 23 - BODY/SWING GATE/FLIP-UP GLASS - ADJUSTMENTS)

(5) Install the support cylinders. (Refer to 23 - BODY/SWING GATE/FLIP-UP GLASS SUPPORT CYLINDER - INSTALLATION)

(6) Position the top of the hinge cover over the hinge and engage the cover tab. (Fig. 7)

(7) Rock the hinge cover down over the hinge and seat fully. Ensure both lower tabs snap into place.

FLIP-UP GLASS - HINGE COVER

REMOVAL

(1) Using a small flat bladed tool or equivalent, insert the tool under the cover and release the locking tabs as shown. (Fig. 6)

(2) Remove the hinge cover from the hinge.

INSTALLATION

(1) Position the top of the hinge cover over the hinge and engage the cover tab. (Fig. 7)

(2) Rock the hinge cover down over the hinge and seat fully. Ensure both lower locking tabs snap into place.

FLIP-UP GLASS - HINGE COVER (Continued)

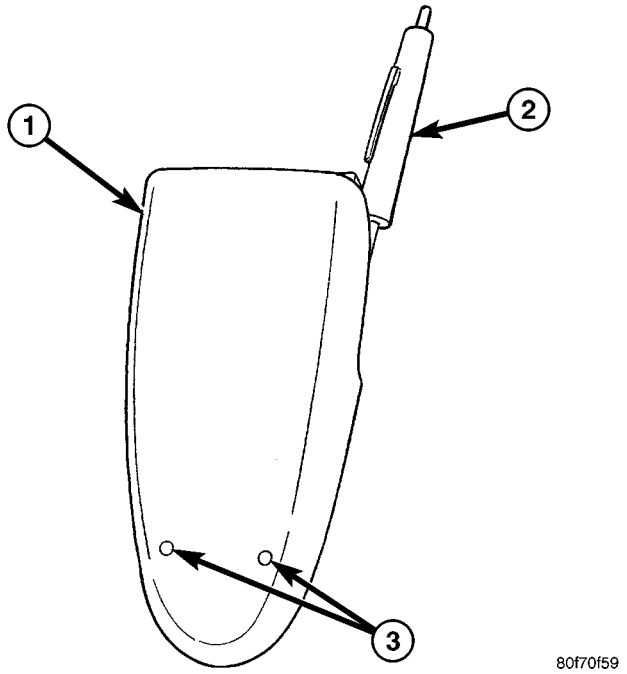

Fig. 6 HINGE COVER REMOVAL

1 - HINGE COVER
2 - FLAT BLADED TOOL
3 - LOCKING TAB LOCATIONS

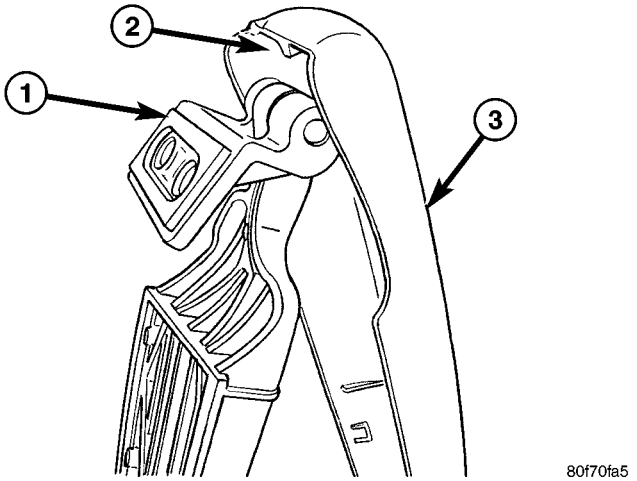

Fig. 7 HINGE COVER INSTALLATION

1 - HINGE
2 - HINGE COVER TAB
3 - HINGE COVER

FLIP-UP GLASS SUPPORT CYLINDER

REMOVAL

(1) Open the flip-up glass and support.

(2) Using a small flat bladed tool, or equivalent, release the retaining clips while pulling the ball socket away from the ball stud. (Fig. 8)

NOTE: Lift the clips only enough to release the ball studs. (Fig. 9)

(3) Remove the support cylinder.

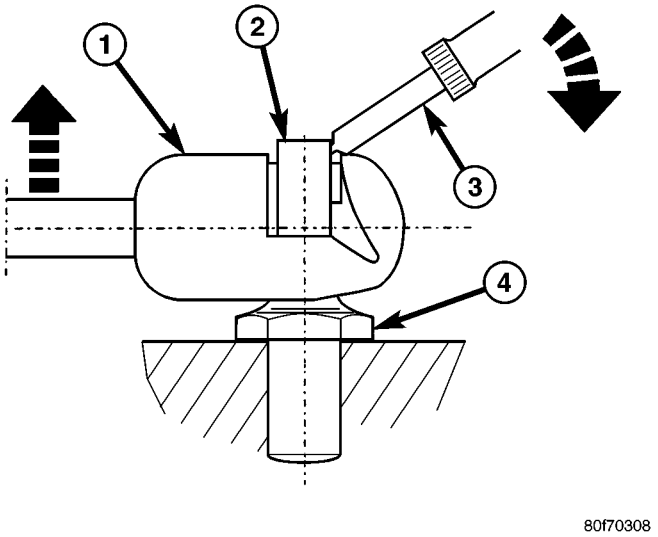

Fig. 8 SUPPORT CYLINDER REMOVAL

1 - BALL SOCKET
2 - RETAINING CLIP
3 - FLAT BLADED TOOL
4 - BALL STUD

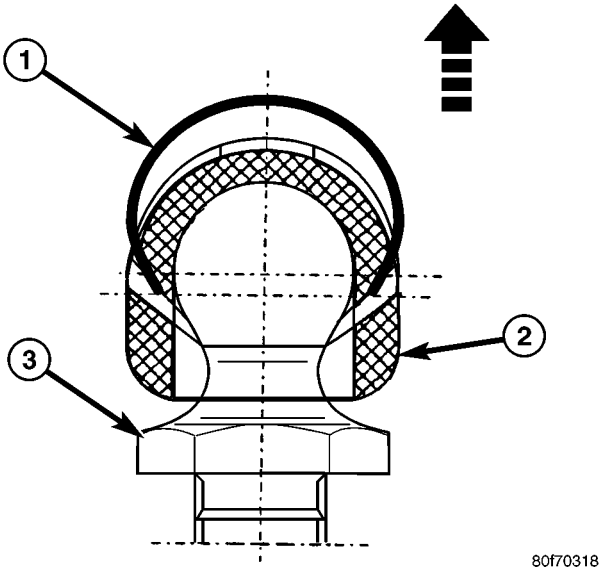

Fig. 9 SUPPORT CYLINDER RETAINING CLIP

1 - RETAINING CLIP
2 - BALL SOCKET
3 - BALL STUD

INSTALLATION

(1) Make sure the retaining clips are seated into the ball socket fully.

FLIP-UP GLASS SUPPORT CYLINDER (Continued)

(2) Install the support cylinder over the ball studs with the thin end connected to the glass and the retaining clips snapping into place.

TRIM PANEL

REMOVAL

(1) Using a trim stick C-4829 or equivalent, release the push pin fasteners. (Fig. 10)

(2) Lift trim panel up off of the upper trim panel clips

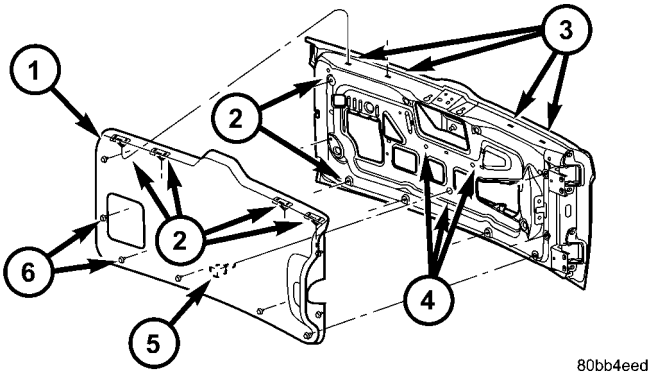

Fig. 10 SWING GATE TRIM PANEL

1 - TRIM PANEL
2 - UPPER TRIM PANEL CLIPS
3 - UPPER TRIM CLIP HOLES
4 - TRIM PANEL LOCATOR HOLES
5 - SWING GATE LOCATOR PINS
6 - PUSH IN FASTENERS

INSTALLATION

(1) Position the trim panel and seat the upper clips.

(2) Fully seat the lower trim panel clips

LATCH

REMOVAL

(1) Remove the trim panel and waterdam. (Refer to 23 - BODY/SWING GATE/TRIM PANEL - REMOVAL)

(2) Disconnect the electrical connector and actuator rod at the clip. (Fig. 11)

(3) Remove the screws and remove the latch.

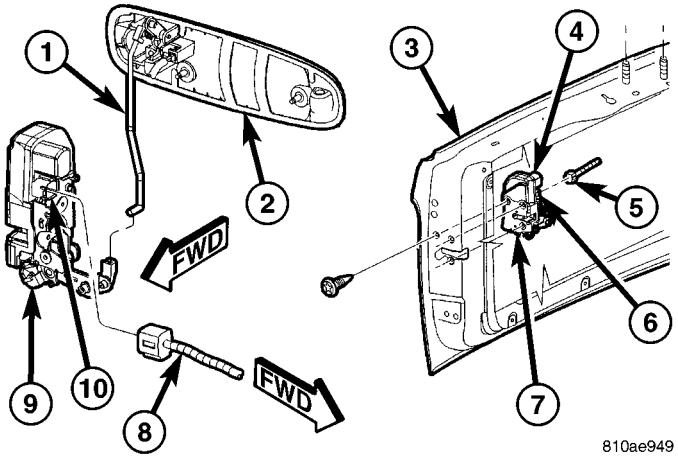

Fig. 11 LATCH

1 - EXTERIOR HANDLE ROD
2 - EXTERIOR HANDLE
3 - SWING GATE
4 - LATCH
5 - WIRE HARNESS
6 - LATCH ELECTRICAL CONNECTOR
7 - LATCH
8 - WIRE HARNESS
9 - LATCH
10 - ELECTRICAL CONNECTOR

INSTALLATION

(1) Install the latch and tighten the screws to 11 N·m (8 ft. lbs.).

(2) Connect the electrical connector.

CAUTION: Make sure the latch wire harness is installed forward of the actuator rod.

(3) Connect the actuator rod.

(4) Insert a 5/32-inch hex-wrench through hole and into adjustment screw. Loosen screw. (Fig. 12)

(5) Operate outside handle several times to release any restriction because of mis-alignment.

(6) Tighten adjustment screw to 3 N·m (30 in. lbs.)

(7) Test handle for proper operation.

(8) Install the trim panel and waterdam. (Refer to 23 - BODY/SWING GATE/TRIM PANEL - INSTALLATION)

LATCH (Continued)

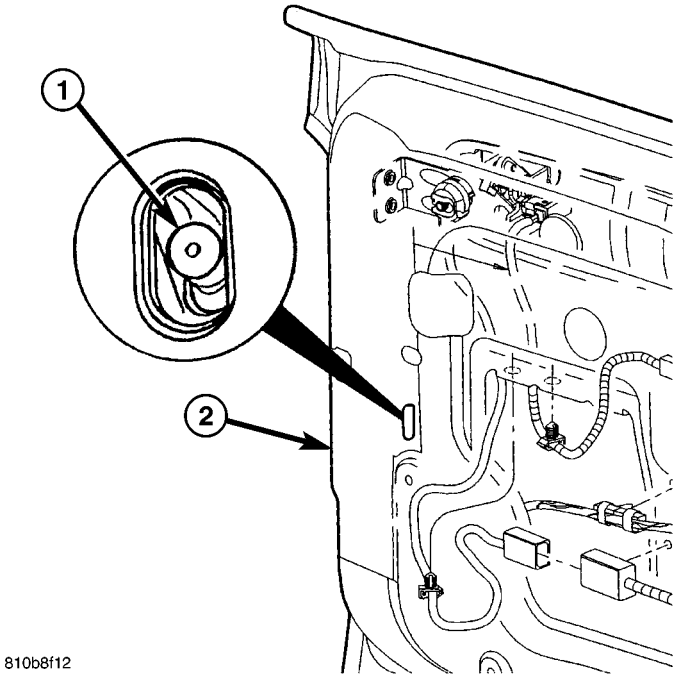

Fig. 12 LATCH ADJUSTMENT SCREW

1 - ADJUSTMENT SCREW
2 - SWING GATE SHUT FACE

LATCH STRIKER

REMOVAL

(1) Open the gate and using a grease pencil or equivalent, mark the position of the striker to aid installation.

(2) Remove the bolts attaching the striker to the d-pillar.

INSTALLATION

(1) Adjust the swing gate as necessary. (Refer to 23 - BODY/SWING GATE/SWING GATE - ADJUSTMENTS)

NOTE: If the spare tire is removed then add 3 mm on the right side to compensate for sag after the spare tire is installed.

(2) Install the striker and install the bolts.

(3) Adjust the striker.

ADJUSTMENTS

ADJUSTMENT

NOTE: Stabilizer insert must be off when adjusting the striker.

(1) Remove the stabilizer insert. (Refer to 23 - BODY/SWING GATE/STABILIZER WEDGE/INSERT - REMOVAL)

(2) Loosen the striker bolts.

(3) Adjust the striker up/down so that it is centered within the latch opening.

(4) Adjust the striker fore/aft so the swing gate is under flush to the body -0.5 mm (+/- 1.0 mm).

(5) Adjust the striker cross-car engagement to the latch by adding 2.0 mm shims as necessary.

NOTE: Make sure the striker is not twisted within the latch opening. Striker should be parallel to the opening.

(6) Tighten the striker bolts to 28 N·m (21 ft. lbs.).

(7) Install the stabilizer insert. (Refer to 23 - BODY/SWING GATE/STABILIZER WEDGE/INSERT - INSTALLATION)

LATCH - ACCESS PANEL

DESCRIPTION

This panel provides access to the gate latch if gate power fails. The gate can be unlocked by reaching in and pushing the lock lever down.

REMOVAL

(1) Using a trim stick C-4755 or equivalent, remove the access panel.

INSTALLATION

(1) Position and install the access panel.

EXTERIOR HANDLE

REMOVAL

(1) Remove the trim panel and waterdam as necessary to gain access to the handle. (Refer to 23 - BODY/SWING GATE/TRIM PANEL - REMOVAL)

(2) Disconnect the lock switch and flip-up glass release electrical connectors.

(3) Unclip the threaded clips and disconnect the actuator rods.

(4) Remove the screws. (Fig. 13)

(5) Remove the nuts and remove the handle.

INSTALLATION

(1) Install the handle and hold tightly against the gate and support bracket.

(2) Install the nuts and tighten to 6 N·m (55 in. lbs.).

(3) Install the screws and tighten to 6 N·m (55 in. lbs.).

EXTERIOR HANDLE (Continued)

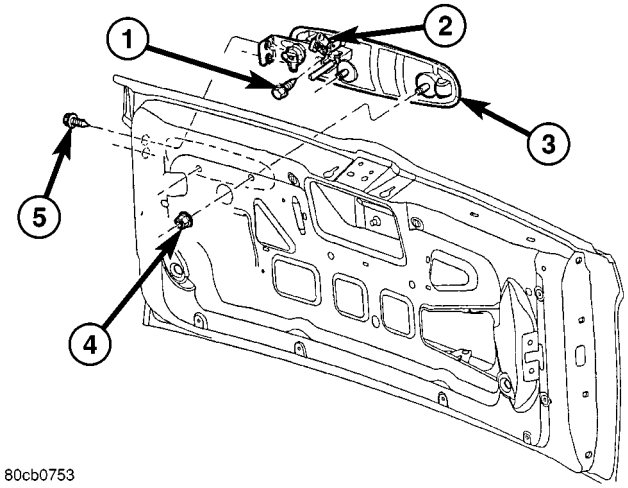

Fig. 13 EXTERIOR HANDLE

1 - LOCK CYLINDER SCREW
2 - LATCH ACTUATOR ROD CONNECTOR
3 - EXTERIOR HANDLE
4 - NUTS (2)
5 - SCREWS (2)

NOTE: Do not pre-load the latch rod when attaching. The latch and handle must be in a relaxed state when making the connection.

(4) Connect the actuator rod by first pushing the rod into the stationary half of the threaded clip, then close the moving half ensuring the two halves snap together fully.

(5) Connect the lock switch and flip-up glass release electrical connectors.

(6) Install the trim panel and waterdam. (Refer to 23 - BODY/SWING GATE/TRIM PANEL - INSTALLATION)

LOCK CYLINDER

REMOVAL

(1) Remove the exterior handle. (Refer to 23 - BODY/SWING GATE/EXTERIOR HANDLE - REMOVAL)

(2) Remove the clip and remove the lock cylinder switch.

(3) Remove the screw and remove the lock cylinder. (Fig. 14)

INSTALLATION

(1) Install the lock cylinder.

(2) Install the screw and tighten to 6 N·m (50 in. lbs.).

(3) Install the lock cylinder switch and retaining clip.

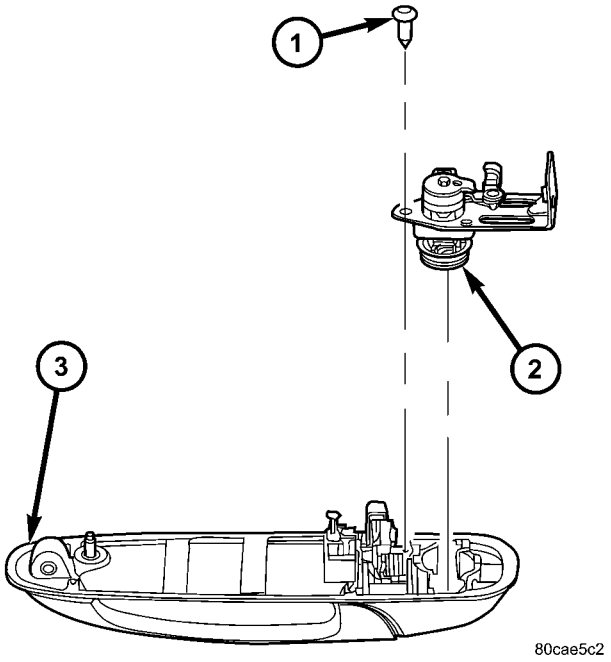

Fig. 14 LOCK CYLINDER

1 - SCREW
2 - LOCK CYLINDER
3 - EXTERIOR HANDLE

(4) Install the exterior handle. (Refer to 23 - BODY/SWING GATE/EXTERIOR HANDLE - INSTALLATION)

CHECK STRAP

REMOVAL

(1) Remove the swing gate trim panel. (Refer to 23 - BODY/SWING GATE/TRIM PANEL - REMOVAL)

(2) Remove the quarter trim panel. (Refer to 23 - BODY/INTERIOR/QUARTER TRIM PANEL - REMOVAL)

(3) Remove the bolts attaching the check strap to the d-pillar. (Fig. 15)

(4) Peel back the waterdam.

(5) Remove the nuts and remove the check strap from the swing gate.

INSTALLATION

(1) Install the check strap.

(2) Install the nuts and tighten to 10 N·m (89 in. lbs.).

(3) Reposition the waterdam.

(4) Install the trim panel. (Refer to 23 - BODY/SWING GATE/TRIM PANEL - INSTALLATION)

(5) Install the bolts attaching the check strap to the d-pillar and tighten to 11 N·m (8 ft. lbs.).

CHECK STRAP (Continued)

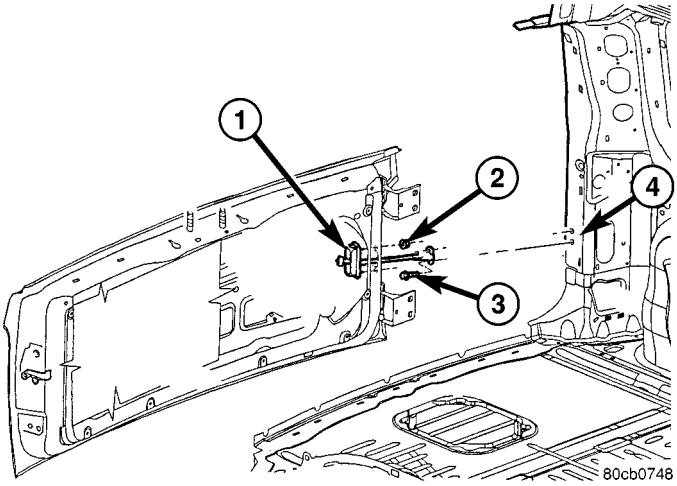

Fig. 15 CHECK STRAP

1 - CHECK STRAP
2 - NUTS (2)
3 - BOLTS (2)
4 - D-PILLAR

(6) Install the quarter trim panel. (Refer to 23 - BODY/INTERIOR/QUARTER TRIM PANEL - INSTALLATION)

STABILIZER WEDGE/INSERT

REMOVAL

(1) Open the swing gate.

(2) Using a grease pencil or equivalent, mark the location of the stabilizer cup and insert to aid installation.

(3) Remove the bolts for the stabilizer cup and remove the cup. (Fig. 16)

(4) Remove the bolts for the insert and remove the insert and shim, if equipped. (Fig. 17)

INSTALLATION

(1) Install the stabilizer insert with the narrow end toward the rear of the vehicle and install the bolts.

(2) Tighten the bolts to 9 N·m (80 in. lbs.).

(3) Install the stabilizer cup and loosely install the bolts.

(4) Adjust the stabilizer and tighten the bolts to 9 N·m (80 in. lbs.). (Refer to 23 - BODY/SWING GATE/ STABILIZER WEDGE/INSERT - ADJUSTMENTS)

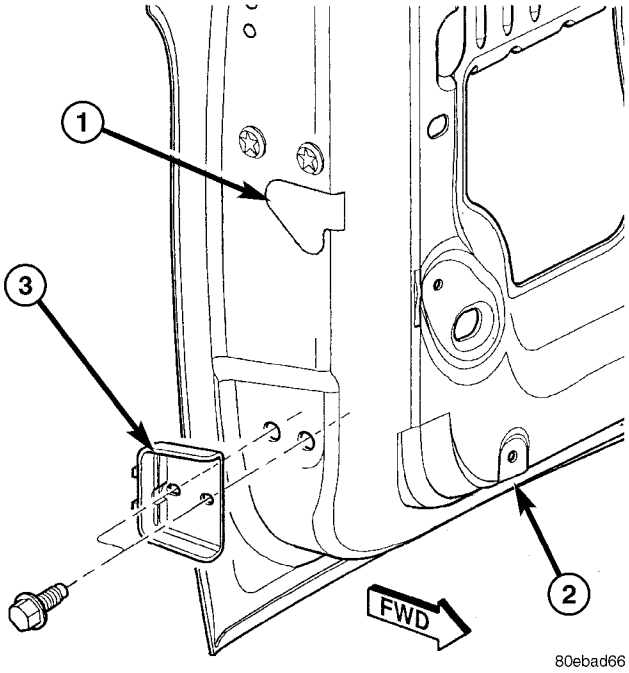

Fig. 16 STABILIZER CUP

1 - SWING GATE LATCH
2 - SWING GATE
3 - STABILIZER CUP

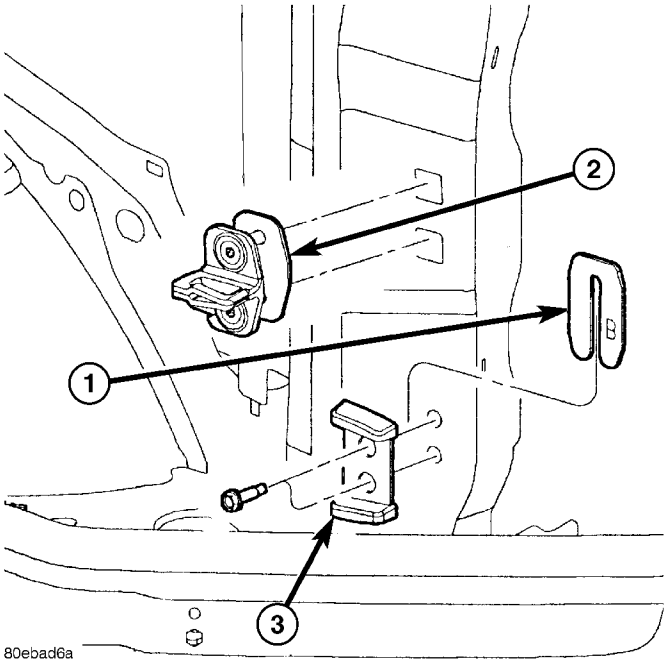

Fig. 17 STABILIZER INSERT

1 - SHIM
2 - SWING GATE LATCH STRIKER
3 - STABILIZER INSERT

STABILIZER WEDGE/INSERT (Continued)

ADJUSTMENTS

ADJUSTMENT

(1) Adjust the insert up/down to that it is centered within the stabilizer cup.

(2) Adjust the insert for/aft so the swing gate is 1.0 mm over flush to the d-pillar when the insert contacts the rubber bumper in the stabilizer cup.

(3) Open the swing gate and tighten the bolts to 9 N·m (80 in. lbs.).

NOTE: Make sure the stabilizer cup and insert are parallel to each other and not twisted.

(4) Close the swing gate and grab the beltline. Confirm minimal for/aft movement and that closing effort is not excessive. Readjust as required.

HINGE

REMOVAL

(1) Remove the swing gate. (Refer to 23 - BODY/ SWING GATE/SWING GATE - REMOVAL)

(2) Using a grease pencil or equivalent, mark the original location of the hinges to aid installation.

(3) Remove the bolts from inside the quarter panel. (Fig. 18)

(4) Remove the outer hinge bolts and remove the hinges. (Fig. 19)

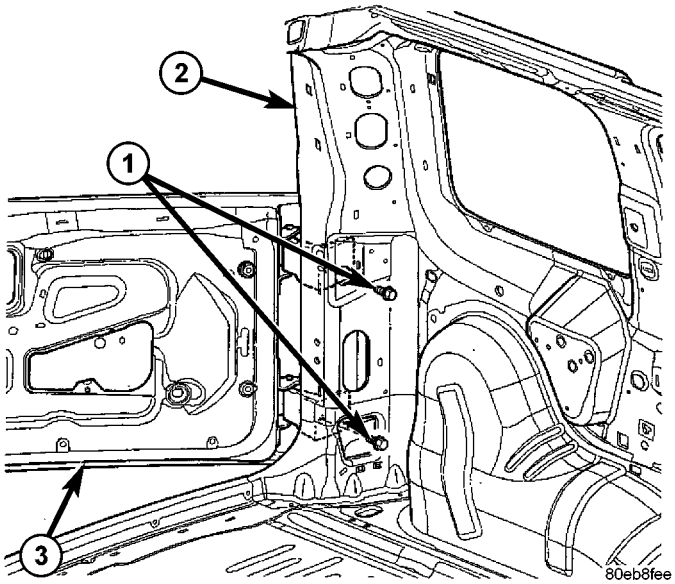

Fig. 18 HINGE FASTENERS/INNER

1 - INNER BOLTS
2 - D-PILLAR
3 - SWING GATE

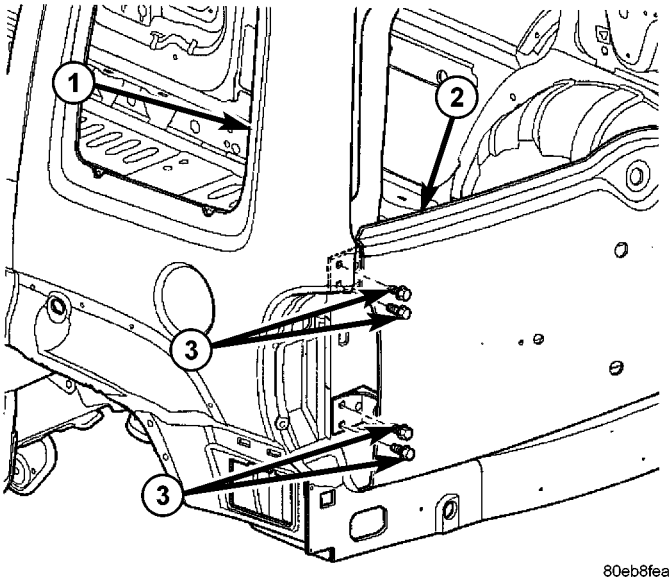

Fig. 19 HINGE FASTENERS/OUTER

1 - D-PILLAR
2 - SWING GATE
3 - OUTER BOLTS (4)

INSTALLATION

(1) Install the hinges and install the inner and outer fasteners.

(2) Tighten the outer fasteners to 31 N·m (23 ft. lbs.) using the sequence indicated. (Fig. 20)

(3) Tighten the inner fasteners to 31 N·m (23 ft. lbs.) using the sequence indicated. (Fig. 21)

(4) Install the swing gate. (Refer to 23 - BODY/ SWING GATE/ SWING GATE - INSTALLATION)

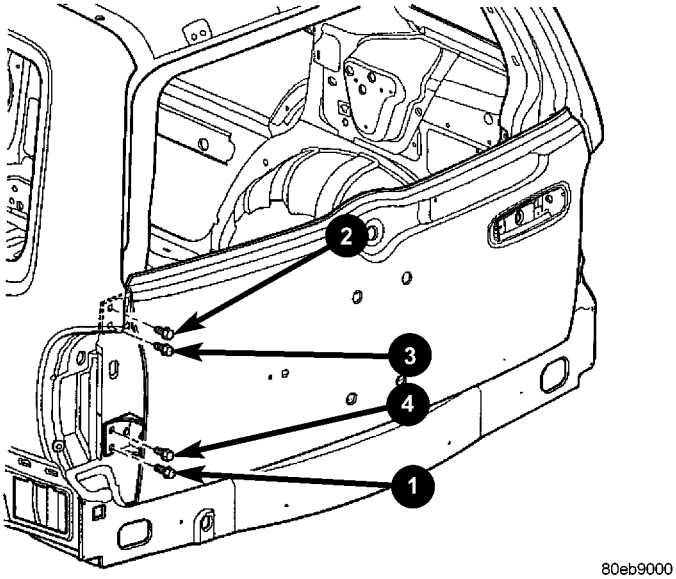

Fig. 20 HINGE FASTENERS/OUTER TORQUE SEQUENCE

HINGE (Continued)

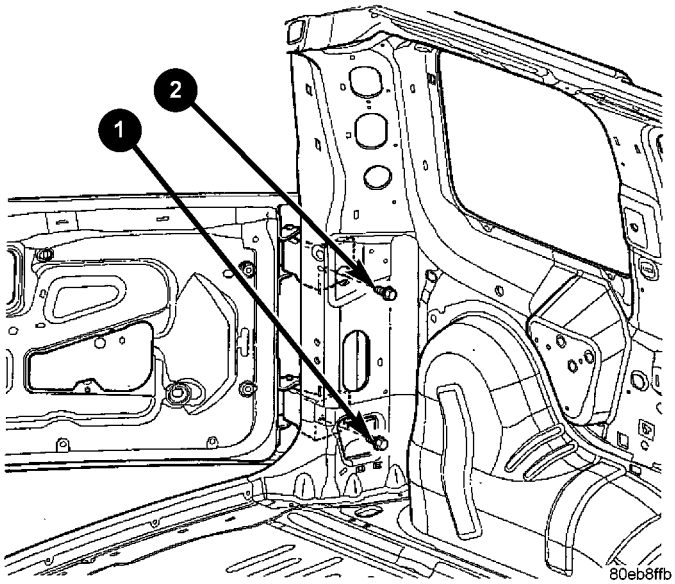

Fig. 21 HINGE FASTENERS/INNER TORQUE SEQUENCE

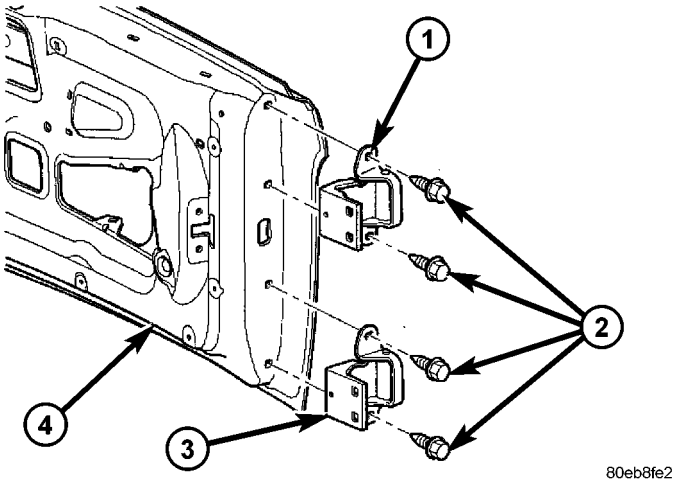

Fig. 22 SWING GATE/HINGE

1 - UPPER HINGE
2 - BOLTS
3 - LOWER HINGE
4 - SWING GATE

SWING GATE

REMOVAL

(1) Remove the spare tire. (Refer to 22 - TIRES/WHEELS/TIRES/SPARE TIRE - REMOVAL)

(2) Remove the quarter trim panel. (Refer to 23 - BODY/INTERIOR/QUARTER TRIM PANEL - REMOVAL)

(3) Support the swing gate with a suitable lifting device.

(4) Disconnect the wire harness.

(5) Disconnect the check strap from the d-pillar. (Refer to 23 - BODY/SWING GATE/CHECK STRAP - REMOVAL)

(6) Remove the bolts and remove the swing gate. (Fig. 22)

INSTALLATION

(1) Install the swing gate and install the bolts.

(2) Tighten the bolts to 31 N·m (23 ft. lbs.).

(3) Adjust the swing gate as needed adding 3 mm on the right side to compensate for sag after the spare tire is installed. (Refer to 23 - BODY/SWING GATE/SWING GATE - ADJUSTMENTS)

(4) Connect the wire harness electrical connector.

(5) Connect the check strap. (Refer to 23 - BODY/SWING GATE/CHECK STRAP - INSTALLATION)

(6) Install the quarter trim panel. (Refer to 23 - BODY/INTERIOR/QUARTER TRIM PANEL - INSTALLATION)

(7) Install the spare tire. (Refer to 22 - TIRES/WHEELS/TIRES/SPARE TIRE - INSTALLATION)

ADJUSTMENTS

ADJUSTMENT

NOTE: Swing gate adjustment measurements should be taken from stationary or welded body panels like the roof, rocker or quarter panels.

- **During adjustment procedures, it is recommended that all the hinge fasteners be loosened except for the upper most fasteners. Adjustments can be made using the upper bolts to hold the door with final torque of the fasteners occurring after correct door positioning is achieved.**
- **A suitable body sealant should be used when removing or moving the hinges.**

(1) Remove the spare tire. (Refer to 22 - TIRES/WHEELS/TIRES/SPARE TIRE - REMOVAL)

IN/OUT

NOTE: In/out swing gate adjustment is done by loosening the hinge to gate fasteners one hinge at a time and moving the door to the correct position.

NOTE: With the spare tire removed add 3 mm on the right side to compensate for sag after the spare tire is installed.

(1) Remove the latch striker. (Refer to 23 - BODY/SWING GATE/LATCH STRIKER - REMOVAL)

(2) Remove the stabilizer wedge/striker. (Refer to 23 - BODY/SWING GATE/STABILIZER WEDGE - REMOVAL)

SWING GATE (Continued)

(3) For hinge side adjustments, loosen the hinge bolts and leave one upper hinge bolt hand tight. (Refer to 23 - BODY/SWING GATE/HINGE - REMOVAL)

(4) Adjust the swing gate to the correct position. (Refer to 23 - BODY/BODY STRUCTURE/GAP AND FLUSH - SPECIFICATIONS)

(5) Tighten the fasteners. (Refer to 23 - BODY/SWING GATE/HINGE - INSTALLATION)

(6) Install the latch striker. (Refer to 23 - BODY/SWING GATE/LATCH STRIKER - INSTALLATION)

(7) Install the spare tire. (Refer to 22 - TIRES/WHEELS/TIRES/SPARE TIRE - INSTALLATION)

UP/DOWN

NOTE: Up/down swing gate adjustment is done by loosening the hinge to gate fasteners or the hinge to body fasteners, one hinge at a time and moving the door to the correct position.

NOTE: With the spare tire removed add 3 mm on the right side to compensate for sag after the spare tire is installed.

(1) Remove the latch striker. (Refer to 23 - BODY/SWING GATE/LATCH STRIKER - REMOVAL)

(2) Remove the stabilizer wedge/striker. (Refer to 23 - BODY/SWING GATE/STABILIZER WEDGE - REMOVAL)

(3) For hinge side adjustments, loosen the hinge bolts and leave one upper hinge bolt hand tight. (Refer to 23 - BODY/SWING GATE/HINGE - REMOVAL)

(4) Adjust the swing gate to the correct position. (Refer to 23 - BODY/BODY STRUCTURE/GAP AND FLUSH - SPECIFICATIONS)

(5) Tighten the fasteners. (Refer to 23 - BODY/SWING GATE/HINGE - INSTALLATION)

(6) Install the latch striker. (Refer to 23 - BODY/SWING GATE/LATCH STRIKER - INSTALLATION)

(7) Install the spare tire. (Refer to 22 - TIRES/WHEELS/TIRES/SPARE TIRE - INSTALLATION)

LEFT/RIGHT

NOTE: Left/right swing gate adjustment is done by loosening the hinge to body fasteners one hinge at a time and moving the door to the correct position.

NOTE: With the spare tire removed add 3 mm on the right side to compensate for sag after the spare tire is installed.

(1) Remove the latch striker. (Refer to 23 - BODY/SWING GATE/LATCH STRIKER - REMOVAL)

(2) Remove the stabilizer wedge/striker. (Refer to 23 - BODY/SWING GATE/STABILIZER WEDGE - REMOVAL)

(3) Loosen the hinge to body bolts and leave one upper hinge bolt hand tight. (Refer to 23 - BODY/SWING GATE/HINGE - REMOVAL)

(4) Adjust the swing gate to the correct position. (Refer to 23 - BODY/BODY STRUCTURE/GAP AND FLUSH - SPECIFICATIONS)

(5) Tighten the fasteners. (Refer to 23 - BODY/SWING GATE/HINGE - INSTALLATION)

(6) Install the latch striker. (Refer to 23 - BODY/SWING GATE/LATCH STRIKER - INSTALLATION)

(7) Install the spare tire. (Refer to 22 - TIRES/WHEELS/TIRES/SPARE TIRE - INSTALLATION)

EXTERIOR

TABLE OF CONTENTS

page

BODY SIDE MOLDINGS
REMOVAL 47
INSTALLATION 47
COWL GRILLE
REMOVAL 47
INSTALLATION 47
EXTERIOR NAME PLATES
REMOVAL 48
INSTALLATION 48
FRONT FENDER
REMOVAL 48
INSTALLATION 48
FUEL FILL DOOR/HOUSING
REMOVAL 49
INSTALLATION 49
GRILLE
REMOVAL 49
INSTALLATION 50
GRILLE OPENING REINFORCEMENT
REMOVAL 50
INSTALLATION 50
FRONT WHEELHOUSE SPLASH SHIELD
REMOVAL 51
INSTALLATION 51
LUGGAGE RACK
REMOVAL 52
INSTALLATION 52

page

REAR WHEELHOUSE SPLASH SHIELD
REMOVAL 52
INSTALLATION 52
FRONT WHEEL OPENING FLARE MOLDINGS
REMOVAL 53
INSTALLATION 53
REAR WHEEL OPENING FLARE MOLDINGS
REMOVAL 53
INSTALLATION 53
RADIATOR CROSSMEMBER
REMOVAL 54
INSTALLATION 54
SIDE VIEW MIRROR
REMOVAL 54
INSTALLATION 54
GLASS-OUTSIDE REARVIEW MIRROR
REMOVAL 54
INSTALLATION 55
SIDE STEP
REMOVAL 55
INSTALLATION 55
ROCK RAIL
REMOVAL 55
INSTALLATION 56
MOLDING - SILL
REMOVAL 56
INSTALLATION 57

BODY SIDE MOLDINGS

REMOVAL

(1) Using a trim stick C-4755 or equivalent, remove and discard the molding from the outside of the door.

INSTALLATION

(1) Thoroughly clean all residue from the body side molding attachment area of the door.

(2) Wipe area clean with a 50% solution of water and alcohol and wipe dry.

(3) Apply new body side molding using the locators in the door and apply pressure of approximately 40 p.s.i. over the entire surface of the molding.

COWL GRILLE

REMOVAL

(1) Remove the hood seal.

(2) Remove the wiper arms. (Refer to 8 - ELECTRICAL/WIPERS/WASHERS/WIPER ARMS - REMOVAL)

(3) Remove the four plastic retainers and remove the cowl grill.

INSTALLATION

(1) Position the cowl grill and engage the nine clips to the bottom of the windshield.

(2) Install the four plastic retainers.

(3) Install the wiper arms. (Refer to 8 - ELECTRICAL/WIPERS/WASHERS/WIPER ARMS - INSTALLATION)

(4) Install the hood seal.

EXTERIOR NAME PLATES

REMOVAL

NOTE: Exterior nameplates are attached to body panels with adhesive tape.

(1) Apply a length of masking tape on the body, parallel to the top edge of the nameplate to use as a guide, if necessary.

(2) If temperature is below 21°C (70°F) warm emblem with a heat lamp or gun. Do not exceed 52°C (120°F) when heating emblem.

(3) Using a trim stick C-4755 or equivalent, behind the emblem to separate the adhesive backing from the body.

(4) Clean adhesive residue from body with MOPAR Super Clean solvent or equivalent.

INSTALLATION

(1) Remove protective cover from adhesive tape on back of emblem.

(2) Position emblem properly on body.

(3) Press emblem firmly to body with palm of hand.

(4) If temperature is below 21°C (70°F) warm emblem with a heat lamp or gun to assure adhesion. Do not exceed 52°C (120°F) when heating emblem.

FRONT FENDER

REMOVAL

(1) Remove the wheel opening splash shield. (Refer to 23 - BODY/EXTERIOR/FRONT WHEELHOUSE SPLASH SHIELD - REMOVAL)

(2) Remove the grille. (Refer to 23 - BODY/EXTERIOR/GRILLE - REMOVAL)

(3) Raise and support vehicle.

(4) Release the inner support clips from within the fascia between the lights. (Fig. 1)

(5) Release the support tabs beneath the headlamps and postition the fascia assembly aside to access the fender support bracket bolts. (Fig. 2)

(6) Remove the front wheel opening flare moldings. (Refer to 23 - BODY/EXTERIOR/FRONT WHEEL OPENING FLARE MOLDINGS - REMOVAL)

(7) Remove the fender support bracket bolts. (Fig. 3)

(8) Remove the bolts and remove the fender. (Fig. 4)

(9) Remove the antenna body, if equipped. (Refer to 8 - ELECTRICAL/AUDIO/ANTENNA BODY & CABLE - REMOVAL)

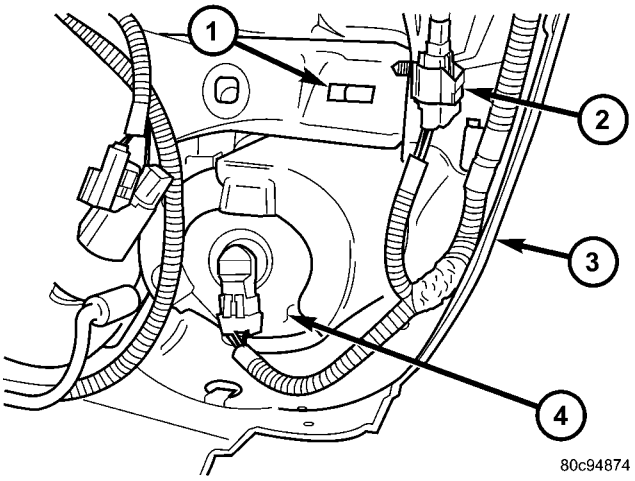

Fig. 1 FASCIA INNER SUPPORT

1 - INNER SUPPORT CLIP
2 - SIDE REPEATER CONNECTOR (IF EQUIPPED)
3 - FASCIA ASSEMBLY
4 - FOG LAMP

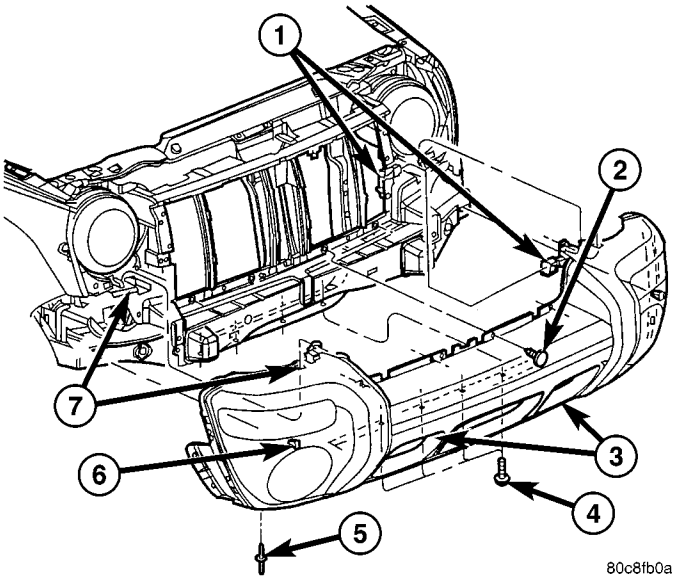

Fig. 2 FRONT FASCIA

1 - ELECTRICAL CONNECTOR
2 - PUSH PINS
3 - FRONT FASCIA ASSEMBLY
4 - LOWER SCREWS
5 - PLASTIC RIVETS (2)
6 - INNER SUPPORT CLIPS
7 - SUPPORT TABS

INSTALLATION

(1) Install the antenna body, if equipped. (Refer to 8 - ELECTRICAL/AUDIO/ANTENNA BODY & CABLE - INSTALLATION)

(2) Install the fender assembly and install the bolts.

(3) Install the fender support bracket and install the bolts.

FRONT FENDER (Continued)

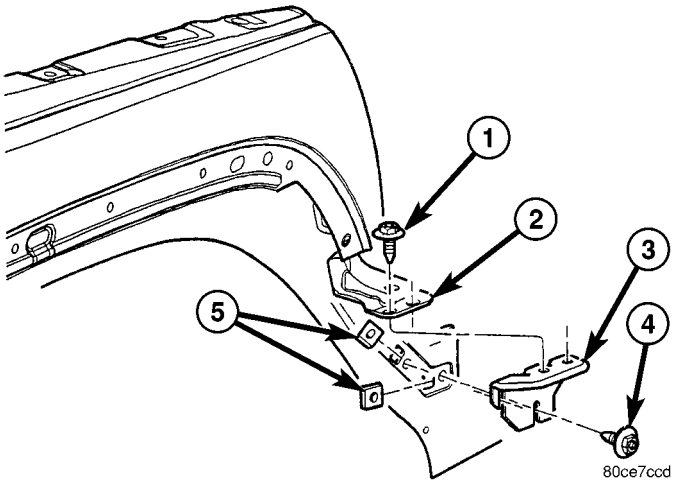

Fig. 3 FENDER SUPPORT BRACKET

1 - FENDER BOLTS (2)
2 - FENDER
3 - FENDER SUPPORT BRACKET
4 - SUPPORT BRACKET BOLTS (2)
5 - U-NUTS (2)

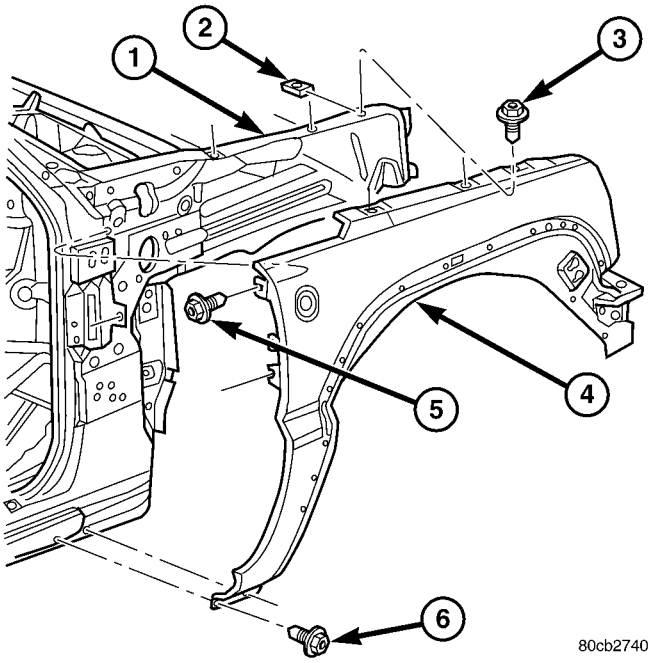

Fig. 4 FRONT FENDER

1 - HYDRAFORM
2 - U-NUTS
3 - BOLTS (3)
4 - FENDER
5 - BOLTS (2)
6 - BOLTS (2)

(4) Align the fender with adjacent body parts and tighten the bolts to 12 N·m (9 ft. lbs.). (Refer to 23 - BODY/BODY STRUCTURE/GAP AND FLUSH - SPECIFICATIONS)

(5) Install the fascia assembly. (Refer to 13 - FRAME & BUMPERS/BUMPERS/FRONT FASCIA - INSTALLATION)

(6) Install the wheelhouse splash shield. (Refer to 23 - BODY/EXTERIOR/FRONT WHEELHOUSE SPLASH SHIELD - INSTALLATION)

FUEL FILL DOOR/HOUSING

REMOVAL

(1) Remove the fuel cap.

(2) Remove the three screws connecting the fuel door/housing to the filler neck.

(3) Reach in through the opening and depress the tabs at the upper and bottom right of the door/housing. (Fig. 5)

(4) Remove the fuel door/housing from the vehicle.

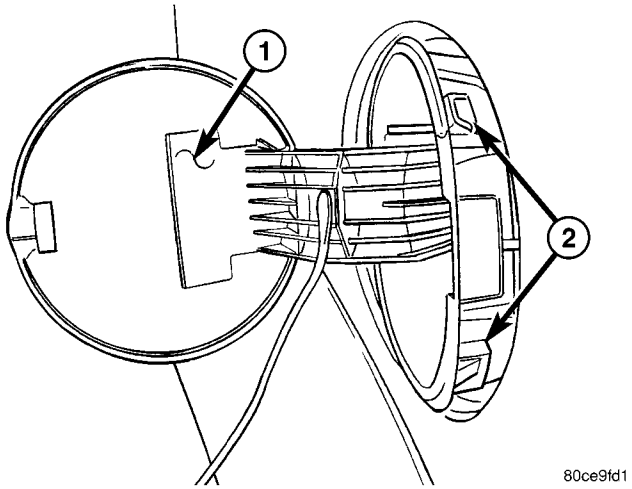

Fig. 5 FUEL FILL DOOR/HOUSING

1 - FUEL FILL DOOR
2 - HOUSING TABS

INSTALLATION

(1) Position the fuel filler door/housing into the vehicle and fully seat the tabs.

(2) Install the three screws.

(3) Install the fuel cap.

GRILLE

REMOVAL

(1) Release the upper clips (3 and 4). (Fig. 6)

(2) Roll the grille (2) forward and disengage the two grille hooks (5) under the headlamp units.

(3) Lift the grille forward and up off of the location tabs at the bottom and remove.

GRILLE (Continued)

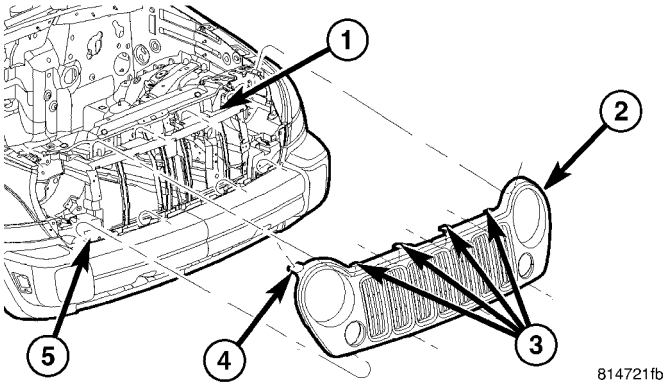

Fig. 6 SPORT GRILLE

1 - GRILLE SUPPORT
2 - GRILLE
3 - RETAINING TABS
4 - RETAINING TABS
5 - LOWER GRILLE SUPPORT

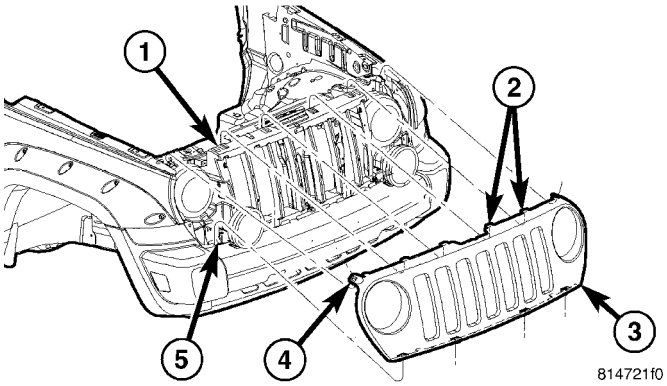

Fig. 7 RENEGADE GRILLE

1 - GRILLE SUPPORT
2 - RETAINING TABS
3 - GRILLE
4 - RETAINING TABS
5 - LOWER GRILLE SUPPORT

NOTE: The procedure to remove the Renegade grille (3) is similar to the standard grille shown above. (Fig. 7)

INSTALLATION

(1) Install the grille onto the locating tabs at the bottom. (Fig. 6)

(2) Push the grille back and snap the hooks onto the grille opening reinforcement.

NOTE: The procedure to install the Renegade grille (Fig. 7) is similar to the standard grille shown. (Fig. 6)

GRILLE OPENING REINFORCEMENT

REMOVAL

(1) Remove the grille. (Refer to 23 - BODY/EXTERIOR/GRILLE - REMOVAL)

(2) Remove the front fascia. (Refer to 13 - FRAME & BUMPERS/BUMPERS/FRONT FASCIA - REMOVAL)

(3) Disconnect the electrical connectors. (Fig. 8)

(4) Disconnect the rubber side flap push pin connectors.

(5) Remove the seven bolts and remove the grille opening reinforcement.

(6) Disconnect the headlamp units electrical connectors.

(7) Remove the headlamp units. (Refer to 8 - ELECTRICAL/LAMPS/LIGHTING - EXTERIOR/HEADLAMP UNIT - REMOVAL)

INSTALLATION

(1) Install the headlamp units. (Refer to 8 - ELECTRICAL/LAMPS/LIGHTING - EXTERIOR/HEADLAMP UNIT - INSTALLATION)

(2) Connect the headlamp unit electrical connectors.

(3) Install the grille opening reinforcement and install the seven bolts.

(4) Tighten the bolts to 10 N·m (85 in. lbs.).

(5) Connect the rubber side flap and install the push pin connectors.

(6) Connect the electrical connectors. (Fig. 8)

(7) Install the front fascia. (Refer to 13 - FRAME & BUMPERS/BUMPERS/FRONT FASCIA - INSTALLATION)

(8) Install the grille. (Refer to 23 - BODY/EXTERIOR/GRILLE - INSTALLATION)

GRILLE OPENING REINFORCEMENT (Continued)

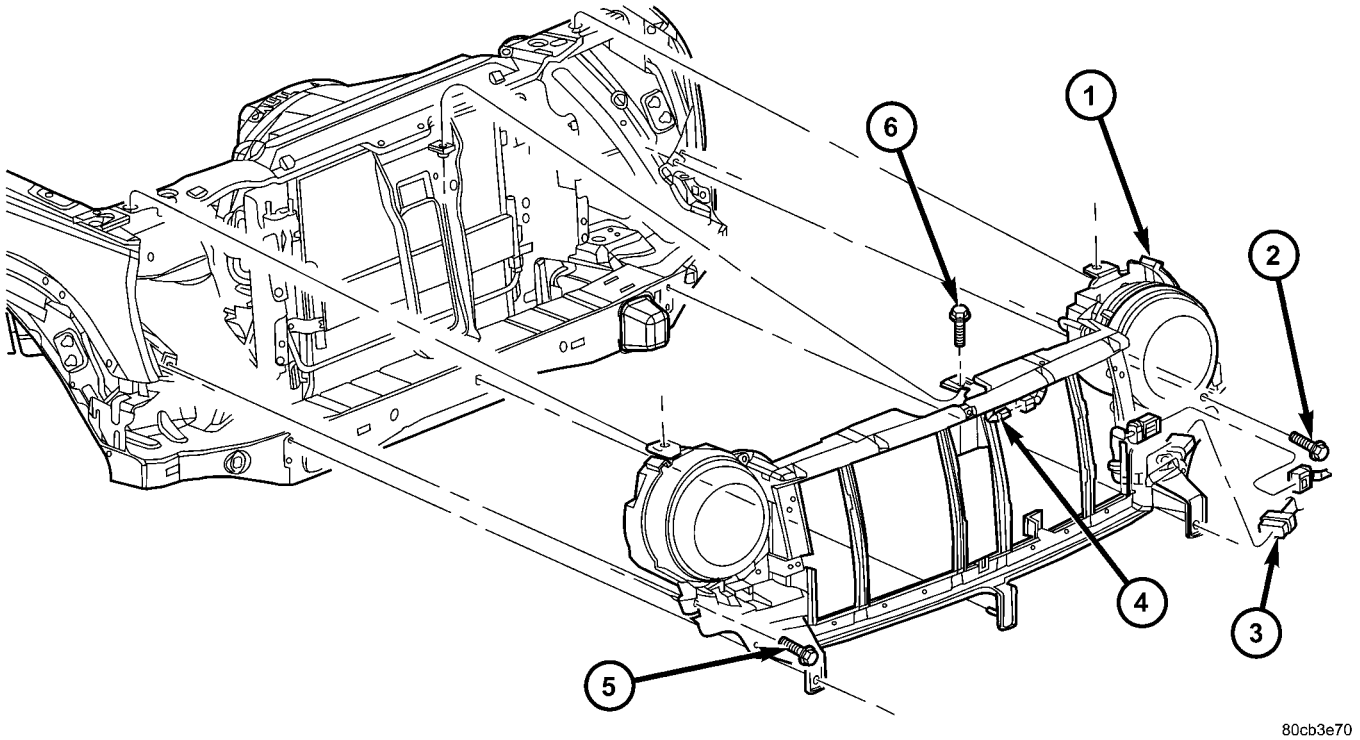

Fig. 8 GRILLE OPENING REINFORCEMENT

1 - GRILLE OPENING REINFORCEMENT
2 - BOLTS (3)
3 - ELECTRICAL CONNECTORS
4 - ELECTRICAL CONNECTOR
5 - BOLTS (3)
6 - BOLT (1)

FRONT WHEELHOUSE SPLASH SHIELD

REMOVAL

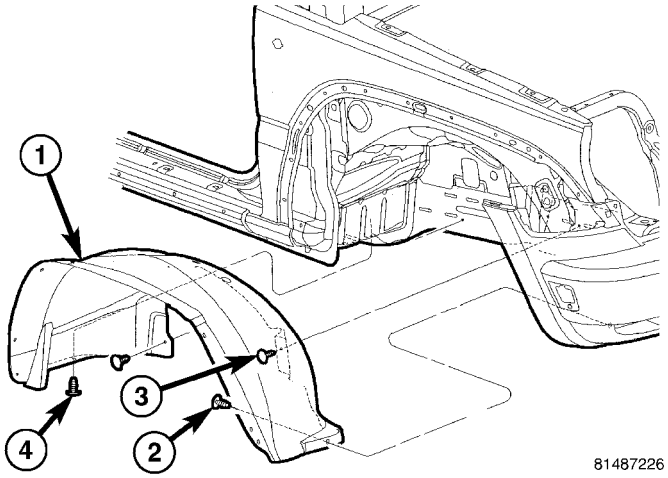

Fig. 9 FRONT WHEELHOUSE SPLASH

1 - SPLASH SHIELD
2 - PUSH PIN FASTENER (1)
3 - PUSH PIN FASTENERS (2)
4 - PUSH PIN FASTENER (1)

(1) Raise and support the vehicle. (Refer to LUBRICATION & MAINTENANCE/HOISTING - STANDARD PROCEDURE)

(2) Turn wheel as necessary to gain access to fasteners.

(3) Remove the four rivets connecting the flare to the splash shield

(4) Remove the rivet connecting the splash shield to the side sill molding.

(5) Remove the three screw/rivets connecting the splash shield to the fascia.

(6) Remove the four push pin fasteners and remove the splash shield. (Fig. 9)

INSTALLATION

(1) Install the splash shield and position above the wheel opening flare molding.

(2) Install the four push pin fasteners. (Fig. 9)

(3) Install the three screw/rivets connecting the splash shield to the fascia.

(4) Install the four rivets connecting the flare to the splash shield

(5) Install the rivet connecting the splash shield to the side sill molding.

LUGGAGE RACK

REMOVAL

(1) Using a trim stick C-4755 or equivalent, remove the roof rack covers. (Fig. 11)

(2) Remove the bolts and remove the roof rack. (Fig. 10)

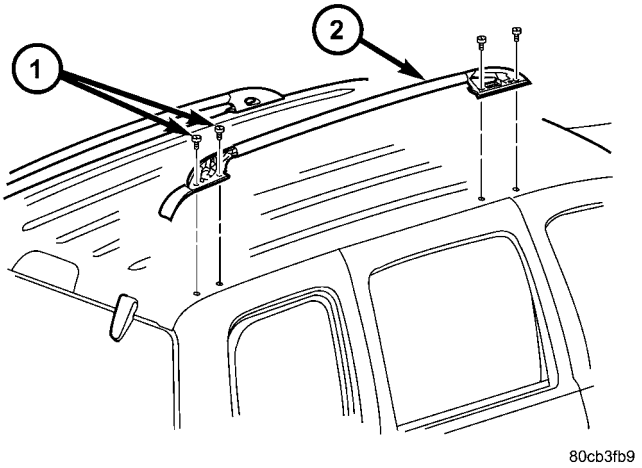

Fig. 10 LUGGAGE RACK

1 - BOLTS (4)
2 - RACK RAIL

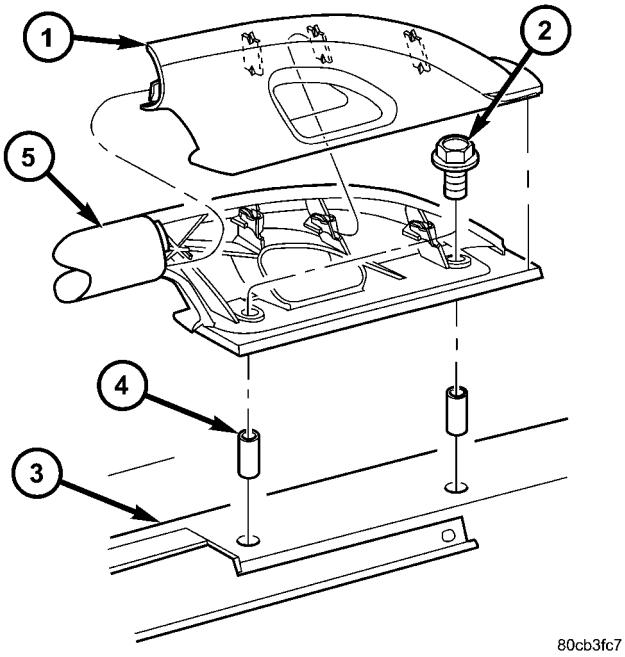

Fig. 11 RACK COVERS

1 - COVER
2 - BOLTS
3 - ROOF PANEL
4 - KNURLED NUT
5 - ROOF RACK

INSTALLATION

(1) Install the roof rack and install the bolts.

(2) Tighten the bolts to 8 N·m (75 in. lbs.).

(3) Snap on the roof rack covers.

REAR WHEELHOUSE SPLASH SHIELD

REMOVAL

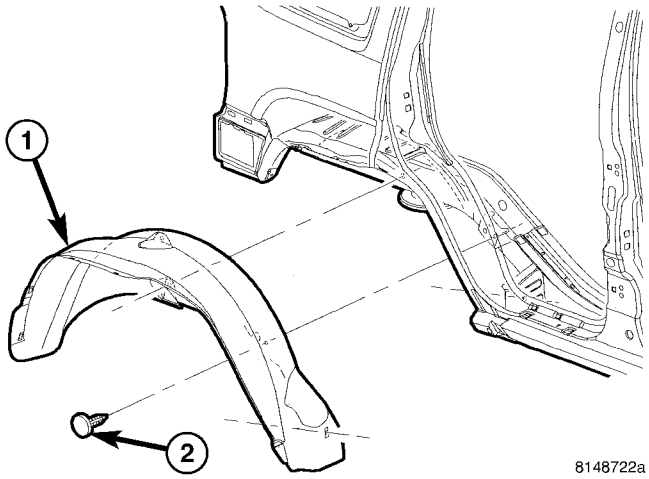

Fig. 12 REAR WHEELHOUSE SPLASH

1 - SPLASH SHIELD
2 - PUSH PIN FASTENERS (2)

(1) Raise and support the vehicle. (Refer to LUBRICATION & MAINTENANCE/HOISTING - STANDARD PROCEDURE)

(2) Remove the wheel.

(3) Remove the two rivets connecting the shield to the side sill molding.

(4) Remove the four rivets connecting the flare molding to the shield.

(5) Remove the two push pin fasteners (2) and remove the shield (1). (Fig. 12)

INSTALLATION

(1) Install the splash shield and above the rear flare molding.

(2) Install new rivets connecting the shield to the flare molding.

(3) Install two new rivets connecting the shield to the side sill molding.

(4) Install the two inner push pin fasteners. (Fig. 12)

(5) Install the wheel. (Refer to 22 - TIRES/WHEELS/WHEELS - STANDARD PROCEDURE - WHEEL MOUNTING)

FRONT WHEEL OPENING FLARE MOLDINGS

REMOVAL

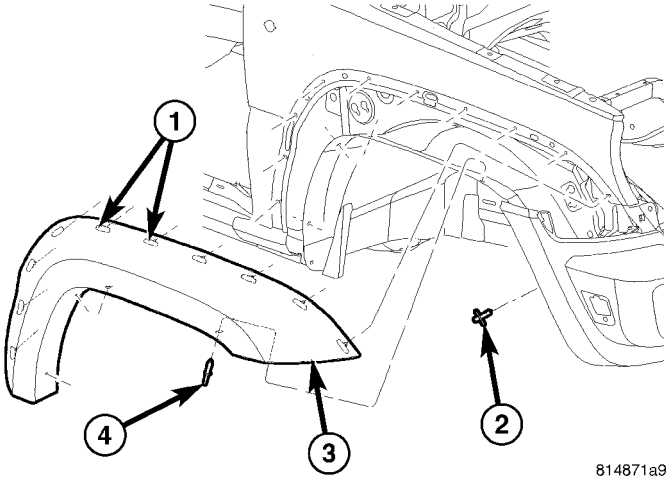

Fig. 13 WHEEL OPENING FLARE MOLDING

1 - CLIPS
2 - WHEEL LINER/FASCIA RIVET
3 - WHEEL OPENING FLARE MOLDING
4 - RIVETS (4)

(1) Remove the four rivets (4) connecting the flare to the splash shield. (Fig. 13)

(2) Using a trim stick C-4755 or equivalent, separate the upper clips (1) attaching the molding (3) to the fender.

(3) Remove the flare molding (3).

INSTALLATION

(1) Position flare molding and seat clips into the fender. (Fig. 13)

(2) Install four new rivets securing the flare molding to the splash shield.

REAR WHEEL OPENING FLARE MOLDINGS

REMOVAL

(1) Raise and support the vehicle. (Refer to LUBRICATION & MAINTENANCE/HOISTING - STANDARD PROCEDURE)

(2) Remove the wheel.

(3) Open the rear door and remove the five rivets (2) from the inside surface of the door. (Fig. 14)

(4) Using a trim stick C-4755 or equivalent, separate the clips attaching the molding to the door and remove the molding.

(5) Remove the 5 rivets (3) from the rear flare (4) and splash shield (2). (Fig. 15)

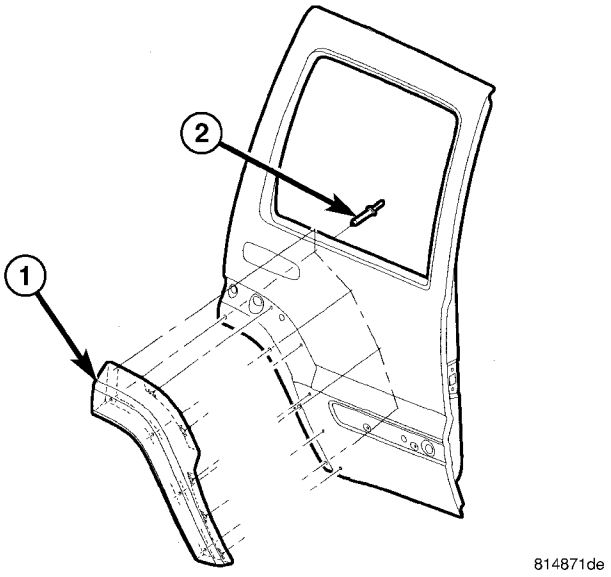

Fig. 14 REAR WHEEL FLARE - FRONT

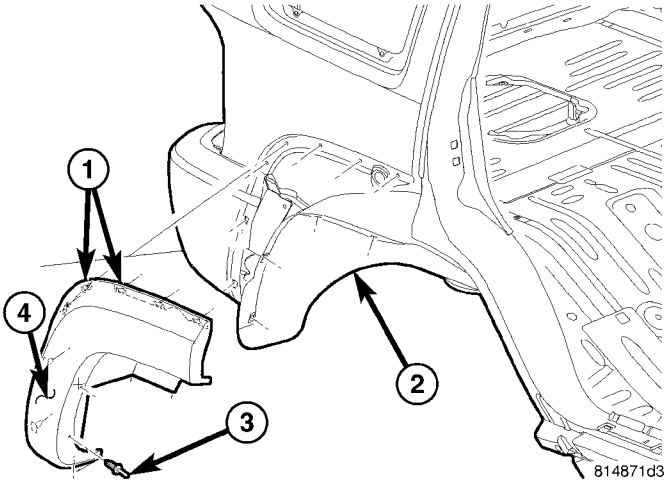

Fig. 15 REAR WHEEL FLARE - REAR

1 - RETAINING CLIPS
2 - WHEELHOUSE SPLASH SHIELD
3 - RIVETS (5 PER SIDE)
4 - REAR FLARE MOLDING

(6) Using a trim stick C-4755 or equivalent, separate the clips (1) attaching the molding (4) to the body and the rear fascia and remove the molding.

INSTALLATION

(1) Position the rear flare molding and seat the clips attaching it to the body and the rear fascia. (Fig. 15)

(2) Install five new rivets attaching the flare to the splash shield.

(3) Position the door flare and seat the clips. (Fig. 14)

(4) Install five new rivets through the inside surface of the door attaching the flare to the door.

REAR WHEEL OPENING FLARE MOLDINGS (Continued)

(5) Install the wheel. (Refer to 22 - TIRES/WHEELS/WHEELS - STANDARD PROCEDURE - WHEEL MOUNTING)

RADIATOR CROSSMEMBER

REMOVAL

(1) Remove the grille. (Refer to 23 - BODY/EXTERIOR/GRILLE - REMOVAL)

(2) Remove the hood latch. (Refer to 23 - BODY/HOOD/LATCH - REMOVAL)

(3) Remove the rivet securing the washer bottle to the crossmember.

(4) Remove the rivets attaching the hood latch support to the crossmember. (Fig. 16)

(5) Remove the bolts and remove the hood latch support.

(6) Remove the bolts and remove the crossmember.

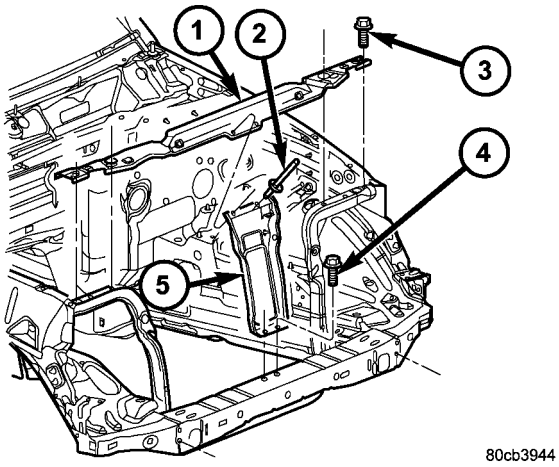

Fig. 16 RADIATOR CROSSMEMBER

1 - CROSSMEMBER
2 - RIVETS
3 - BOLTS (4)
4 - BOLTS (2)
5 - HOOD LATCH SUPPORT

INSTALLATION

(1) Install the crossmember and install the bolts.

(2) Tighten the bolts to 10 N·m (85 in. lbs.).

(3) Install the hood latch support and install the bolts.

(4) Tighten the bolts to 10 N·m (85 in. lbs.).

(5) Install new rivets attaching the hood latch support to the crossmember.

(6) Install the hood latch. (Refer to 23 - BODY/HOOD/LATCH - INSTALLATION)

(7) Install the grille. (Refer to 23 - BODY/EXTERIOR/GRILLE - INSTALLATION)

(8) Install a new rivet securing the washer bottle to the crossmember.

SIDE VIEW MIRROR

REMOVAL

(1) Remove the trim panel. (Refer to 23 - BODY/DOOR - FRONT/TRIM PANEL - REMOVAL)

(2) Disconnect the electrical connector. (Fig. 17)

(3) Remove the three nuts and remove the mirror assembly.

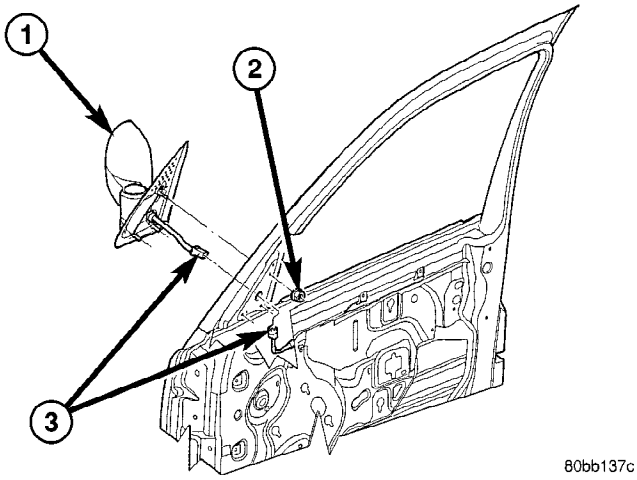

Fig. 17 SIDE VIEW MIRROR

1 - MIRROR ASSEMBLY
2 - NUTS (3)
3 - ELECTRICAL CONNECTOR

INSTALLATION

(1) Install the mirror assembly.

(2) Install the three nuts and tighten to 7 N·m (65 in. lbs.).

(3) Connect the electrical connector.

(4) Install the trim panel. (Refer to 23 - BODY/DOOR - FRONT/TRIM PANEL - INSTALLATION)

GLASS-OUTSIDE REARVIEW MIRROR

REMOVAL

WARNING: ALWAYS WEAR EYE AND HAND PROTECTION WHEN SERVICING THE MIRROR ASSEMBLY. FAILURE TO OBSERVE THESE WARNINGS MAY RESULT IN PERSONAL INJURY FROM BROKEN GLASS.

(1) Carefully pull/pry the broken glass holder from the mirror assembly.

(2) Disconnect the heated mirror electrical connectors from the terminals on the mirror glass holder, if equipped.

GLASS-OUTSIDE REARVIEW MIRROR (Continued)

INSTALLATION

CAUTION: It is important to make sure the motor is square to the glass holder (attaching fingers) prior to glass holder attachment, otherwise the glass holder could be installed incorrectly causing poor retention and possible repeat failure.

(1) Position the new mirror glass holder to the mirror assembly.

NOTE: Position the mirror glass holder so that the moisture drain hole on the mirror glass holder assembly is facing downward.

(2) Align the mirror glass holder's attaching fingers to the mirror motor housing.

NOTE: Ensure that the protective rubber cover of the mirror motor housing is positioned correctly around the bottom of the fingers area.

(3) Using one hand, firmly press the mirror glass holder assembly into place while at the same time supporting the housing assembly from the backside with the other hand.

NOTE: Pressure must be applied equally over the center portion of the mirror to engage the mirror glass holder's attaching fingers to the corresponding fingers on the housing assembly. One or more clicks may be heard when finger engagement takes place.

(4) Verify retention of the mirror glass holder assembly by gently pulling outward on the mirror glass holder.

SIDE STEP

REMOVAL

(1) Raise and support the vehicle. (Refer to LUBRICATION & MAINTENANCE/HOISTING - STANDARD PROCEDURE)

(2) Remove side step bolts and nuts and remove side step. (Fig. 18)

(3) Remove sill bracket to frame bracket nuts.

(4) Remove frame bracket bolts to frame and remove frame brackets.

(5) Remove sill bracket bolts and remove sill brackets. (Fig. 19)

INSTALLATION

(1) Install sill bracket and install bolts.

(2) Tighten bolts to 23 N·m (17 ft. lbs.).

(3) Install frame bracket and install bolts.

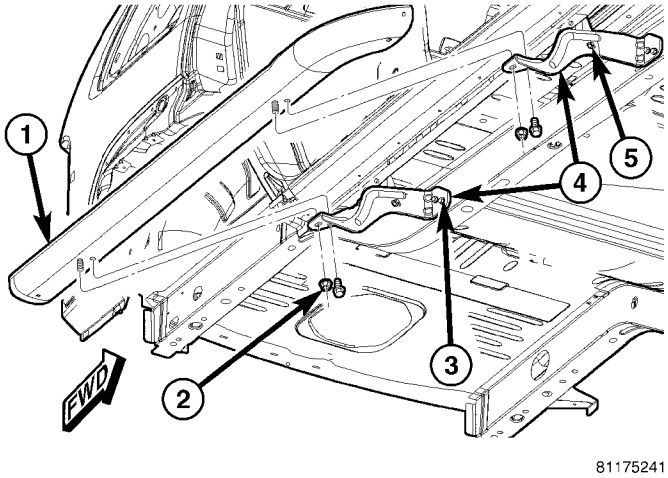

Fig. 18 SIDE STEP

1 - SIDE STEP
2 - SIDE STEP NUTS/BOLTS
3 - SUPPORT BRACKET FRAME BOLTS (2)
4 - FRAME BRACKETS
5 - SILL BRACKETS

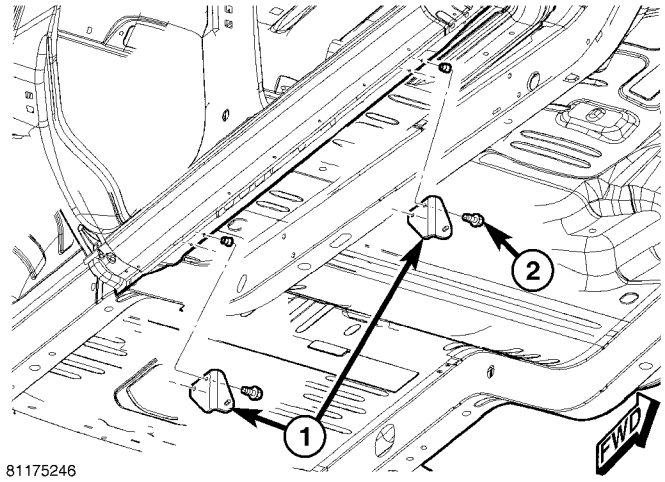

Fig. 19 SILL BRACKETS

1 - SILL BRACKETS
2 - BOLTS (2 PER BRACKET)

(4) Install sill bracket nut.

(5) Tighten bolts and nuts to 23 N·m (17 ft. lbs.).

(6) Install side step and install bolts/nuts.

(7) Tighten bolts and nuts to 23 N·m (17 ft. lbs.).

ROCK RAIL

REMOVAL

(1) Remove the bolts (2) and remove the rock rail. (Fig. 20)

(2) Remove the bolts (2) and remove the brackets. (Fig. 21)

ROCK RAIL (Continued)

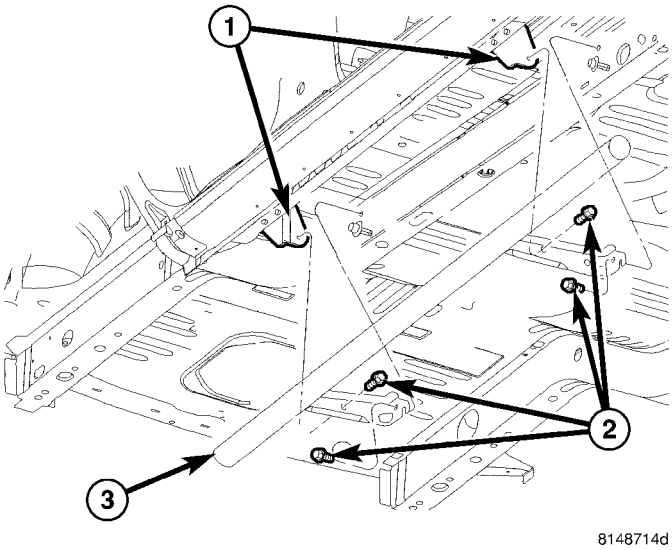

Fig. 20 ROCK RAIL

1 - SUPPORT BRACKETS
2 - BOLTS (4)

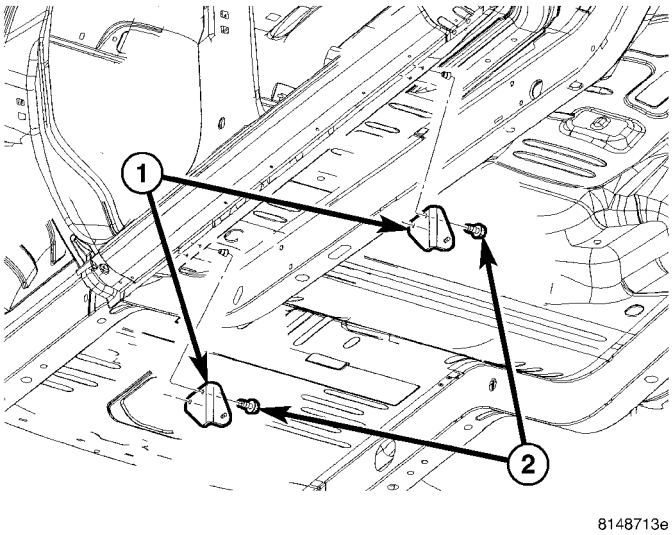

Fig. 21 ROCK RAIL SILL BRACKETS

1 - SUPPORT BRACKETS
2 - BOLTS (2 PER BRACKET)

INSTALLATION

(1) Install the brackets and install the bolts. (Fig. 21)

(2) Tighten the bolts to 23 N·m (200 in. lbs.).

(3) Install the rock rails and install the bolts. (Fig. 20)

(4) Tighten the bolts to 23 N·m (200 in. lbs.).

MOLDING - SILL

REMOVAL

Front Sill Molding

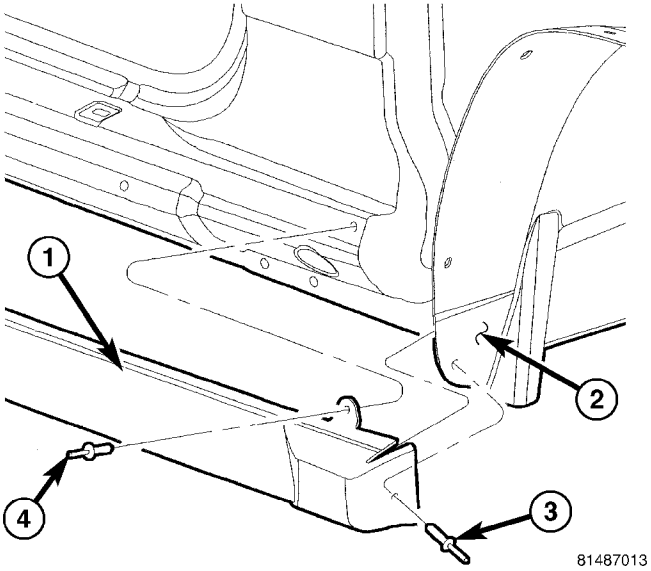

Fig. 22 FRONT SILL MOLDING

1 - FRONT SILL MOLDING
2 - WHEELHOUSE SPLASH SHIELD
3 - RIVET
4 - RIVET

(1) Remove the front wheel flare molding as necessary to gain access to the rivets. (Refer to 23 - BODY/EXTERIOR/WHEEL OPENING FLARE MOLDING - REMOVAL) (Fig. 22)

(2) Remove the front rivets (3 and 4).

(3) Separate the lower clips (2) using a trim tool C-4829-A or equivalent. (Fig. 23)

(4) Using a trim stick C-4755 or equivalent, separate the adhesive tape and upper clips (1) and remove the front sill molding (3).

MOLDING - SILL (Continued)

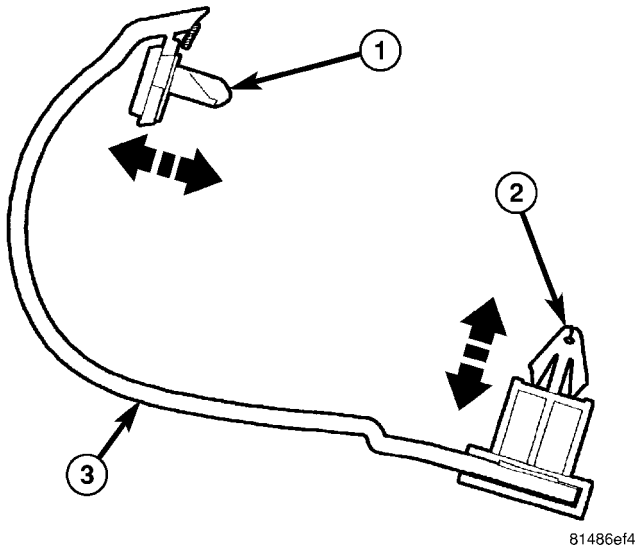

Fig. 23 SILL MOLDING

1 - UPPER PUSH PIN FASTENERS
2 - LOWER PUSH PIN FASTENERS
3 - SILL MOLDING

Rear Sill Molding

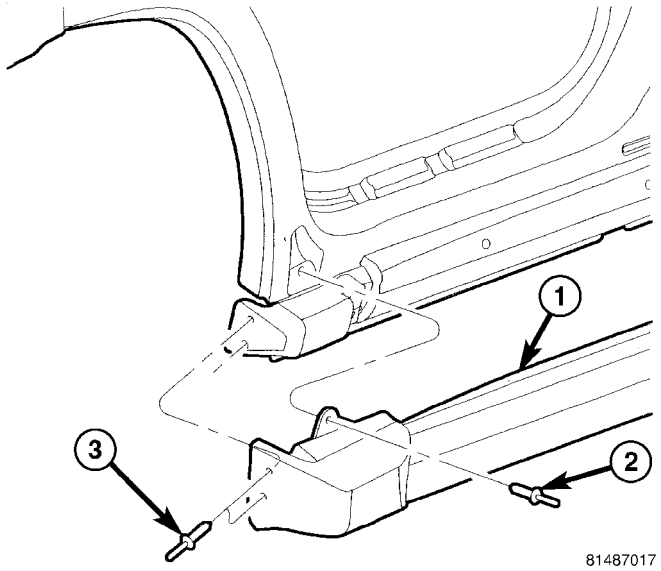

Fig. 24 REAR SILL MOLDING

1 - REAR SILL MOLDING
2 - RIVET
3 - RIVETS (2)

(1) Open the rear door and remove the rivets (2 and 3). (Fig. 24)

(2) Separate the lower clips (2) using a trim tool C-4829-A or equivalent. (Fig. 25)

(3) Using a trim stick C-4755 or equivalent, separate the adhesive tape and upper clips (1) and remove the rear sill molding (3).

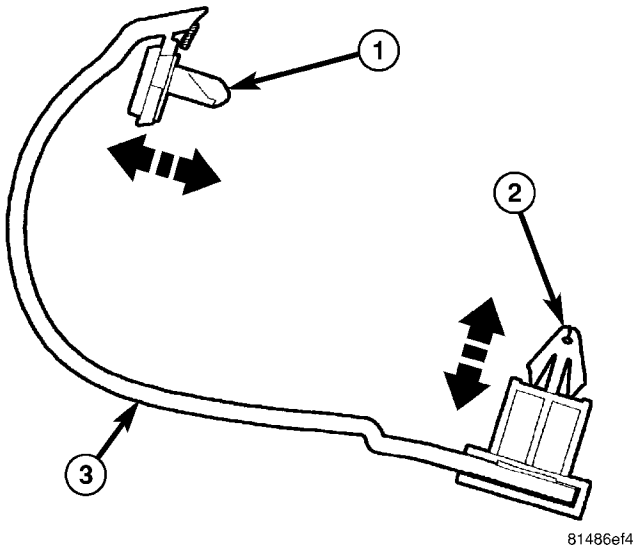

Fig. 25 SILL MOLDING

1 - UPPER PUSH PIN FASTENERS
2 - LOWER PUSH PIN FASTENERS
3 - SILL MOLDING

INSTALLATION

(1) Thoroughly clean all residue from the body side sill molding attachment area.

(2) Wipe area clean with a 50% solution of water and alcohol and wipe dry.

Rear Sill Molding

(1) Replace the lower push pin fasteners if damaged previously.

(2) Remove the protective backing from the adhesive tape on the upper rear side of the molding.

(3) Position the rear sill molding behind the lower rear door and slide forward until fully seated to rear sill with all pins aligned to holed. (Fig. 23)

NOTE: Avoid contact with the adhesive strip on rear of sill.

(4) Seat the upper push pin fasteners then the lower fasteners fully.

Front Sill Molding

(1) Replace the lower push pin fasteners if damaged previously.

(2) Remove the protective backing from the adhesive tape on the upper rear side of the molding.

(3) Position the front sill molding over the matting flange on the previously installed rear sill molding. Make sure the tab on the front molding is fully engaged onto the rear molding flange and slide rearward. (Fig. 26)

MOLDING - SILL (Continued)

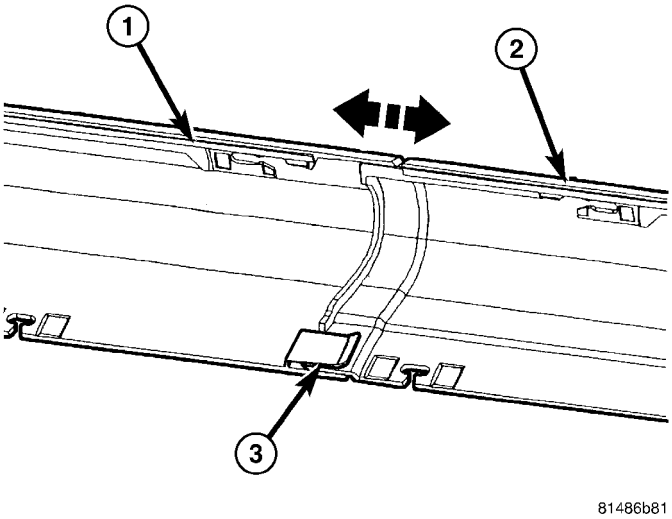

Fig. 26 SILL MOLDINGS

1 - FRONT SILL MOLDING
2 - REAR SILL MOLDING
3 - RETAINING TAB

(4) Seat the upper and then the lower push pin fasteners fully. (Fig. 23)

(3) Apply hand pressure along the upper edge of the molding starting at the front of the front molding sliding back to the rear of the rear molding.

NOTE: This will ensure that the adhesive tape on the back side of the moldings has contacted the sill.

(4) Replace the plastic rivets securing the front (Fig. 22) and rear moldings (Fig. 24) at the wheel openings.

(5) Install the front wheel opening flare molding as necessary. (Refer to 23 - BODY/EXTERIOR/WHEEL OPENING FLARE MOLDING - INSTALLATION)

INSTRUMENT PANEL

TABLE OF CONTENTS

page

CLUSTER BEZEL
REMOVAL 59
INSTALLATION 59
GLOVE BOX
REMOVAL 60
INSTALLATION 60
GLOVE BOX LATCH
REMOVAL 60
INSTALLATION 60
GLOVE BOX LATCH STRIKER
REMOVAL 60
INSTALLATION 61
INSTRUMENT PANEL ASSEMBLY
REMOVAL 61
INSTALLATION 64
INSTRUMENT PANEL TOP COVER
REMOVAL 65
INSTALLATION 66
INSTRUMENT PANEL END CAP
REMOVAL 66
INSTALLATION 66
INSTRUMENT PANEL DRIVER SIDE BEZELS
REMOVAL 66
INSTALLATION 67
INSTRUMENT PANEL CENTER BEZEL
REMOVAL 67
INSTALLATION 67
INSTRUMENT PANEL PASSENGER SIDE BEZEL
REMOVAL 67
INSTALLATION 68
KNEE BLOCKER
REMOVAL 68
INSTALLATION 69

CLUSTER BEZEL

REMOVAL

WARNING: On vehicles equipped with airbags, disable the airbag system before attempting any steering wheel, steering column, seat belt tensioner, or instrument panel component diagnosis or service. Disconnect and isolate the battery negative (ground) cable, then wait two minutes for the airbag system capacitor to discharge before performing further diagnosis or service. This is the only sure way to disable the airbag system. Failure to take the proper precautions could result in accidental airbag deployment and possible personal injury.

(1) Remove the drives side trim bezels. (Refer to 23 - BODY/INSTRUMENT PANEL/INSTRUMENT PANEL DRIVER SIDE BEZEL - REMOVAL)
(2) Remove the instrument panel top cover. (Refer to 23 - BODY/INSTRUMENT PANEL/INSTRUMENT PANEL TOP COVER - REMOVAL)
(3) Remove the seven screws and remove the cluster bezel.

INSTALLATION

WARNING: On vehicles equipped with airbags, disable the airbag system before attempting any steering wheel, steering column, seat belt tensioner, or instrument panel component diagnosis or service. Disconnect and isolate the battery negative (ground) cable, then wait two minutes for the airbag system capacitor to discharge before performing further diagnosis or service. This is the only sure way to disable the airbag system. Failure to take the proper precautions could result in accidental airbag deployment and possible personal injury.

(1) Install the cluster bezel and the seven screws.
(2) Install the instrument panel top cover. (Refer to 23 - BODY/INSTRUMENT PANEL/INSTRUMENT PANEL TOP COVER - INSTALLATION)
(3) Install the drives side trim bezels. (Refer to 23 - BODY/INSTRUMENT PANEL/INSTRUMENT PANEL DRIVER SIDE BEZEL - INSTALLATION)

GLOVE BOX

REMOVAL

WARNING: ON VEHICLES EQUIPPED WITH AIRBAGS, DISABLE THE AIRBAG SYSTEM BEFORE ATTEMPTING ANY STEERING WHEEL, STEERING COLUMN, SEAT BELT TENSIONER, OR INSTRUMENT PANEL COMPONENT DIAGNOSIS OR SERVICE. DISCONNECT AND ISOLATE THE BATTERY NEGATIVE (GROUND) CABLE, THEN WAIT TWO MINUTES FOR THE AIRBAG SYSTEM CAPACITOR TO DISCHARGE BEFORE PERFORMING FURTHER DIAGNOSIS OR SERVICE. THIS IS THE ONLY SURE WAY TO DISABLE THE AIRBAG SYSTEM. FAILURE TO TAKE THE PROPER PRECAUTIONS COULD RESULT IN ACCIDENTAL AIRBAG DEPLOYMENT AND POSSIBLE PERSONAL INJURY.

(1) Open the glove box.
(2) Squeeze the stop tabs located on the sides of the box and allow the box to open fully.
(3) With box in the full down position slide the box to the right off of the hinges and remove.

INSTALLATION

WARNING: ON VEHICLES EQUIPPED WITH AIRBAGS, DISABLE THE AIRBAG SYSTEM BEFORE ATTEMPTING ANY STEERING WHEEL, STEERING COLUMN, SEAT BELT TENSIONER, OR INSTRUMENT PANEL COMPONENT DIAGNOSIS OR SERVICE. DISCONNECT AND ISOLATE THE BATTERY NEGATIVE (GROUND) CABLE, THEN WAIT TWO MINUTES FOR THE AIRBAG SYSTEM CAPACITOR TO DISCHARGE BEFORE PERFORMING FURTHER DIAGNOSIS OR SERVICE. THIS IS THE ONLY SURE WAY TO DISABLE THE AIRBAG SYSTEM. FAILURE TO TAKE THE PROPER PRECAUTIONS COULD RESULT IN ACCIDENTAL AIRBAG DEPLOYMENT AND POSSIBLE PERSONAL INJURY.

(1) Position the box on and slide the box to the left to engage the hinges.
(2) Close the glove box.

GLOVE BOX LATCH

REMOVAL

WARNING: ON VEHICLES EQUIPPED WITH AIRBAGS, DISABLE THE AIRBAG SYSTEM BEFORE ATTEMPTING ANY STEERING WHEEL, STEERING COLUMN, SEAT BELT TENSIONER, OR INSTRUMENT PANEL COMPONENT DIAGNOSIS OR SERVICE. DISCONNECT AND ISOLATE THE BATTERY NEGATIVE (GROUND) CABLE, THEN WAIT TWO MINUTES FOR THE AIRBAG SYSTEM CAPACITOR TO DISCHARGE BEFORE PERFORMING FURTHER DIAGNOSIS OR SERVICE. THIS IS THE ONLY SURE WAY TO DISABLE THE AIRBAG SYSTEM. FAILURE TO TAKE THE PROPER PRECAUTIONS COULD RESULT IN ACCIDENTAL AIRBAG DEPLOYMENT AND POSSIBLE PERSONAL INJURY.

(1) Remove the glove box. (Refer to 23 - BODY/INSTRUMENT PANEL/GLOVE BOX - REMOVAL)
(2) Remove the nine screws and remove the glove box skin.
(3) Remove the latch from the locators.

INSTALLATION

WARNING: ON VEHICLES EQUIPPED WITH AIRBAGS, DISABLE THE AIRBAG SYSTEM BEFORE ATTEMPTING ANY STEERING WHEEL, STEERING COLUMN, SEAT BELT TENSIONER, OR INSTRUMENT PANEL COMPONENT DIAGNOSIS OR SERVICE. DISCONNECT AND ISOLATE THE BATTERY NEGATIVE (GROUND) CABLE, THEN WAIT TWO MINUTES FOR THE AIRBAG SYSTEM CAPACITOR TO DISCHARGE BEFORE PERFORMING FURTHER DIAGNOSIS OR SERVICE. THIS IS THE ONLY SURE WAY TO DISABLE THE AIRBAG SYSTEM. FAILURE TO TAKE THE PROPER PRECAUTIONS COULD RESULT IN ACCIDENTAL AIRBAG DEPLOYMENT AND POSSIBLE PERSONAL INJURY.

(1) Position the latch onto the locators.
(2) Install the glove box skin onto the glove box and install the nine screws.
(3) Install the glove box. (Refer to 23 - BODY/INSTRUMENT PANEL/GLOVE BOX - INSTALLATION)

GLOVE BOX LATCH STRIKER

REMOVAL

WARNING: ON VEHICLES EQUIPPED WITH AIRBAGS, DISABLE THE AIRBAG SYSTEM BEFORE ATTEMPTING ANY STEERING WHEEL, STEERING COLUMN, SEAT BELT TENSIONER, OR INSTRUMENT PANEL COMPONENT DIAGNOSIS OR SERVICE. DISCONNECT AND ISOLATE THE BATTERY NEGATIVE (GROUND) CABLE, THEN WAIT TWO MINUTES FOR THE AIRBAG SYSTEM CAPACITOR TO DISCHARGE BEFORE PERFORMING FURTHER DIAGNOSIS OR SERVICE. THIS IS THE ONLY SURE WAY TO DISABLE THE AIRBAG SYSTEM. FAILURE TO TAKE THE PROPER PRECAUTIONS COULD RESULT IN ACCIDENTAL AIRBAG DEPLOYMENT AND POSSIBLE PERSONAL INJURY.

GLOVE BOX LATCH STRIKER (Continued)

(1) Open the glove box.
(2) Remove the two striker screws and remove the latch striker.

INSTALLATION

WARNING: ON VEHICLES EQUIPPED WITH AIRBAGS, DISABLE THE AIRBAG SYSTEM BEFORE ATTEMPTING ANY STEERING WHEEL, STEERING COLUMN, SEAT BELT TENSIONER, OR INSTRUMENT PANEL COMPONENT DIAGNOSIS OR SERVICE. DISCONNECT AND ISOLATE THE BATTERY NEGATIVE (GROUND) CABLE, THEN WAIT TWO MINUTES FOR THE AIRBAG SYSTEM CAPACITOR TO DISCHARGE BEFORE PERFORMING FURTHER DIAGNOSIS OR SERVICE. THIS IS THE ONLY SURE WAY TO DISABLE THE AIRBAG SYSTEM. FAILURE TO TAKE THE PROPER PRECAUTIONS COULD RESULT IN ACCIDENTAL AIRBAG DEPLOYMENT AND POSSIBLE PERSONAL INJURY.

(1) Install the striker and install the two screws.
(2) Loosen the screws to adjust if necessary.

INSTRUMENT PANEL ASSEMBLY

REMOVAL

WARNING: ON VEHICLES EQUIPPED WITH AIRBAGS, DISABLE THE AIRBAG SYSTEM BEFORE ATTEMPTING ANY STEERING WHEEL, STEERING COLUMN, OR INSTRUMENT PANEL COMPONENT DIAGNOSIS OR SERVICE. DISCONNECT AND ISOLATE THE BATTERY NEGATIVE (GROUND) CABLE, THEN WAIT TWO MINUTES FOR THE AIRBAG SYSTEM CAPACITOR TO DISCHARGE BEFORE PERFORMING FURTHER DIAGNOSIS OR SERVICE. THIS IS THE ONLY SURE WAY TO DISABLE THE AIRBAG SYSTEM. FAILURE TO TAKE THE PROPER PRECAUTIONS COULD RESULT IN ACCIDENTAL AIRBAG DEPLOYMENT AND POSSIBLE PERSONAL INJURY.

NOTE: Before starting this procedure, be certain to turn the steering wheel until the front wheels are in the straight-ahead position.

(1) Disconnect and isolate the battery negative cable.
(2) Remove the instrument panel speakers. (Refer to 8 - ELECTRICAL/AUDIO/SPEAKER - REMOVAL)
(3) Remove the floor console. (Refer to 23 - BODY/INTERIOR/FLOOR CONSOLE - REMOVAL)
(4) Remove the radio. (Refer to 8 - ELECTRICAL/AUDIO/RADIO - REMOVAL)
(5) Remove the four nuts and remove the center support bracket. (Fig. 10)
(6) Remove the ground strap bolt and disconnect the restraint module electrical connector. (Fig. 6)
(7) Position front wheels **straight ahead.**
(8) Remove knee blocker cover and knee blocker. (Refer to 23 - BODY/INSTRUMENT PANEL/KNEE BLOCKER - REMOVAL)
(9) Remove screws from the lower column shroud and remove both the upper and lower shrouds. (Fig. 1)

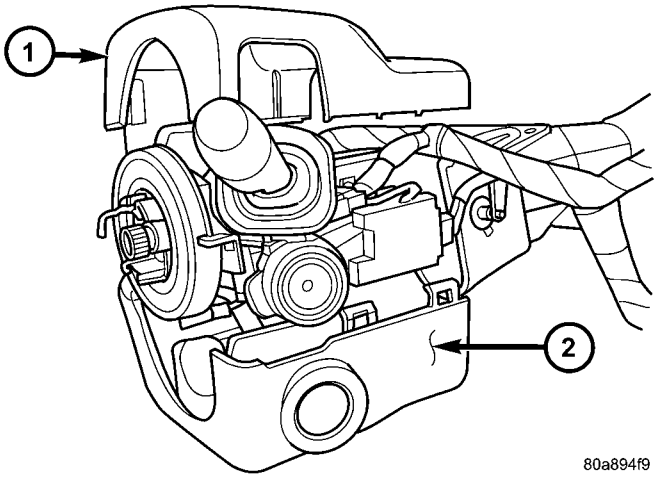

Fig. 1 SHROUD REMOVAL/INSTALL

1 - UPPER SHROUD
2 - LOWER SHROUD

(10) Turn ignition key to the on position.
(11) Disconnect the automatic transmission shifter interlock cable from the column, if equipped.

CAUTION: Do not turn the clockspring more than 90° or damage to the clockspring may occur.

(12) Using a grease pencil or equivalent, mark the position of the steering wheel.
(13) Remove the steering coupler bolt and column mounting nuts and bolts then lower column off the mounting studs. (Fig. 2)
(14) Disconnect and remove the wiring harness from the column. (Fig. 3)
(15) Slide the shifter interlock cable from the tie straps.
(16) Remove the steering column.

CAUTION: Do not remove the brake lamp switch. This is a one time component and is not intended for reinstallation. If the brake lamp switch is removed it must be discarded and replaced with a new switch.

INSTRUMENT PANEL ASSEMBLY (Continued)

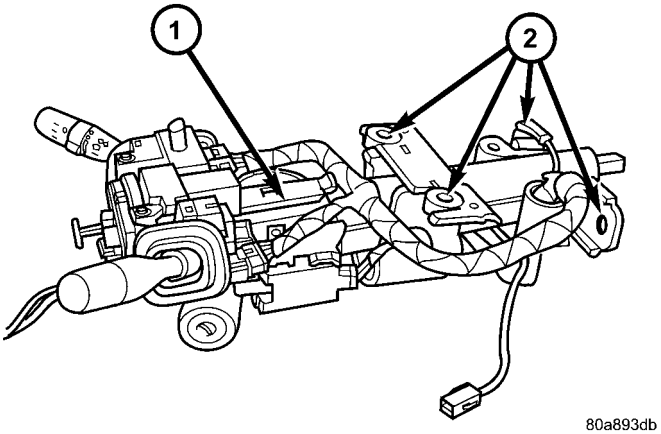

Fig. 2 STEERING COLUMN MOUNTING

1 - STEERING COLUMN
2 - MOUNTING HOLES

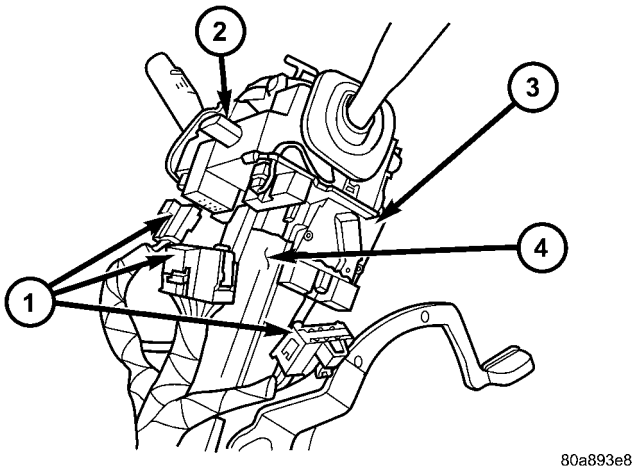

Fig. 3 WIRING HARNESS COLUMN

1 - COLUMN WIRING HARNESS
2 - MULTI-FUNCTION SWITCH
3 - IGNITION SWITCH
4 - STEERING COLUMN

(17) Disconnect the brake lamp switch electrical connector.

(18) Remove the drivers side cowl trim cover. (Refer to 23 - BODY/INTERIOR/COWL TRIM COVER - REMOVAL)

(19) Disconnect the wire harness connector behind the drivers side cowl trim cover.

(20) Disconnect the green and light blue wire harness bulk connectors at the junction block. (Fig. 4)

(21) Disconnect the electrical connector at the inner side of the pedal support bracket. (Fig. 5)

(22) Remove the two bolts at the front of the pedal support bracket. (Fig. 5)

(23) Remove the two bolts from the bottom side of the pedal support bracket. (Fig. 5)

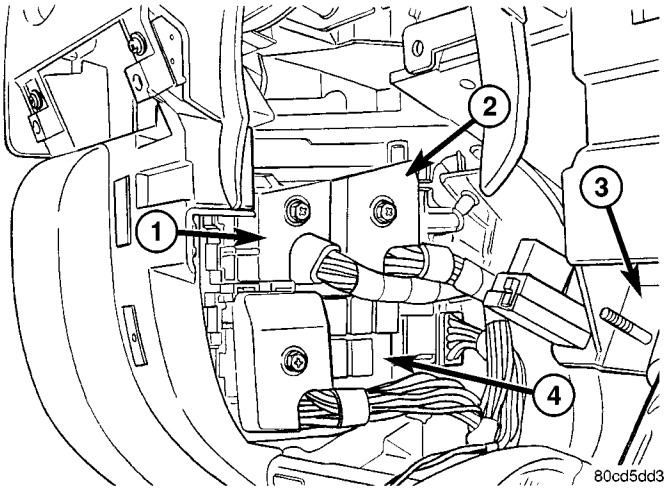

Fig. 4 JUNCTION BLOCK CONNECTORS

1 - ELECTRICAL CONNECTOR
2 - ELECTRICAL CONNECTOR
3 - PEDAL SUPPORT BRACKET
4 - JUNCTION BLOCK

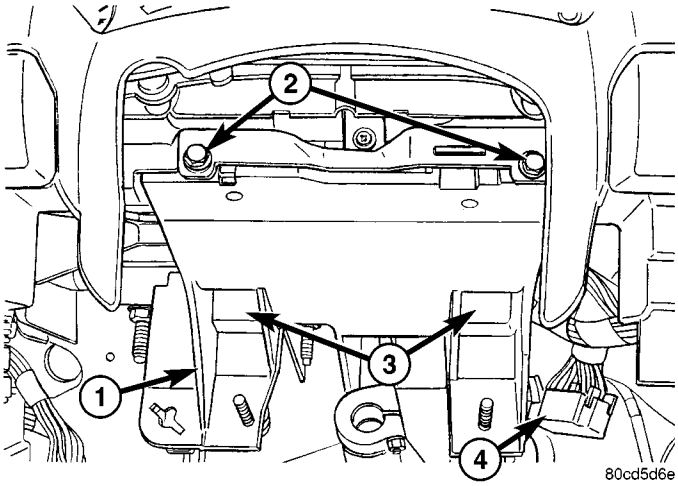

Fig. 5 PEDAL SUPPORT BRACKET

1 - PEDAL SUPPORT BRACKET
2 - BOLTS
3 - BOLTS
4 - ELECTRICAL CONNECTOR

(24) Remove the two roll down bracket bolts at the drivers cowl side panel. (Fig. 10)

(25) Remove the glove box. (Refer to 23 - BODY/INSTRUMENT PANEL/GLOVE BOX - REMOVAL)

(26) Remove the two HVAC mounting bolts behind the center trim. (Fig. 6)

(27) Remove the passenger side trim bezel. (Refer to 23 - BODY/INSTRUMENT PANEL/INSTRUMENT PANEL PASSENGER SIDE BEZEL - REMOVAL)

(28) Remove the HVAC mounting bolt above the glove box striker. (Fig. 7)

(29) Remove the HVAC bolt at the lower outside corner of the glove box opening. (Fig. 8)

INSTRUMENT PANEL ASSEMBLY (Continued)

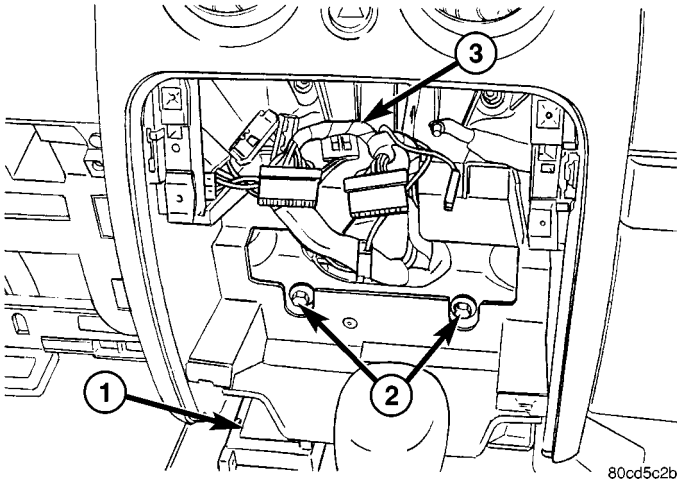

Fig. 6 HVAC BOLTS

1 - RESTRAINT MODULE
2 - HVAC BOLTS
3 - RADIO WIRE HARNESS

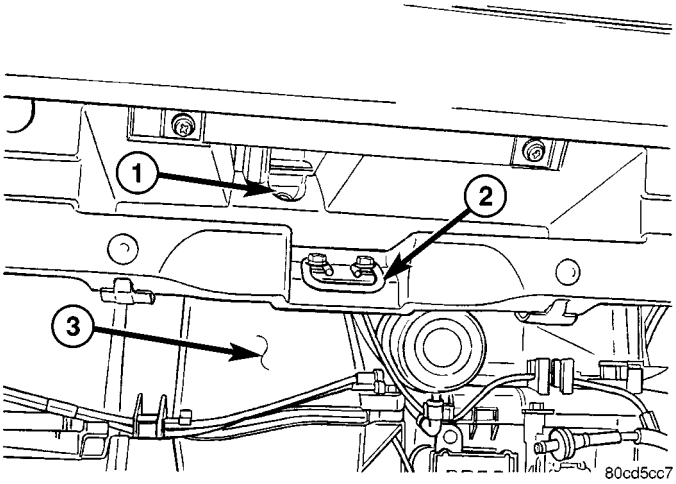

Fig. 7 HVAC UPPER BOLT

1 - BOLT
2 - GLOVE BOX STRIKER
3 - HVAC UNIT

(30) Remove the passenger side cowl trim cover. (Refer to 23 - BODY/INTERIOR/COWL TRIM COVER - REMOVAL)

(31) Disconnect the blower resistor electrical connector. (Fig. 8)

(32) Remove the two roll down bracket bolts at the passenger cowl side panel.

(33) Disconnect the vacuum check valve and the vacuum reservoir. (Fig. 8)

(34) Disconnect the blower motor electrical connector.

(35) Disconnect the blend door connector. (Fig. 9)

(36) Remove the four bolts at the top of the instrument panel connecting to the cowl front panel.

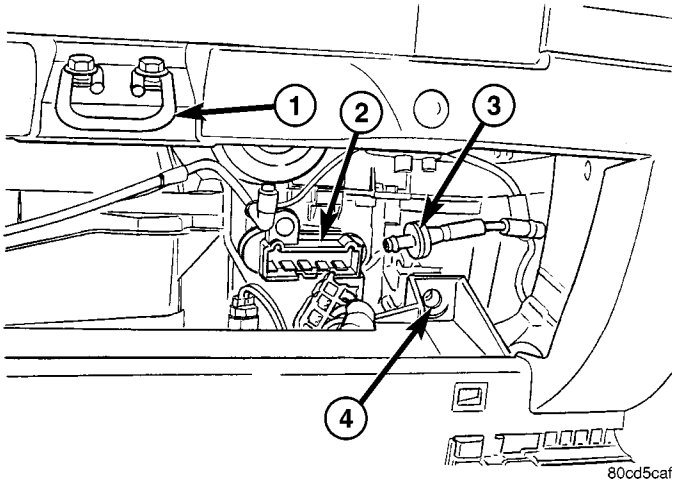

Fig. 8 HVAC CONNECTIONS

1 - GLOVE BOX STRIKER
2 - BLOWER RESISTOR
3 - VACUUM CHECK VALVE
4 - BOLT

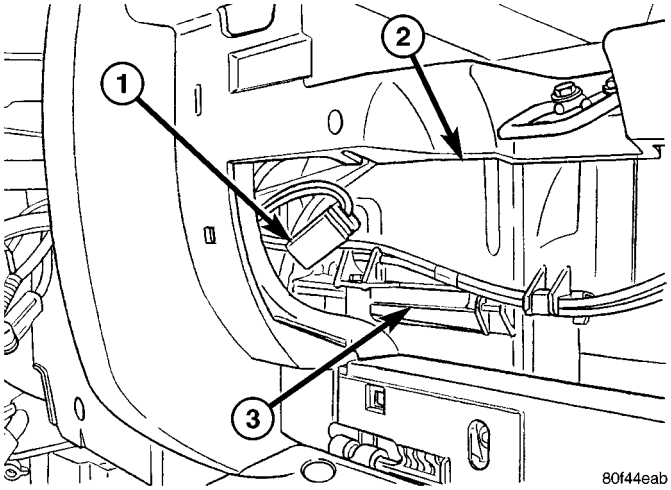

Fig. 9 BLEND DOOR CONNECTOR (TYPICAL)

1 - ELECTRICAL CONNECTOR
2 - GLOVE BOX OPENING
3 - HVAC

(37) Roll the instrument panel rearward and remove the wire harness from routing channel in the rear.

(38) Disconnect the push pin fastener and position aside the radio wire harness. Note the location of the harness for installation.

(39) Remove the instrument panel.

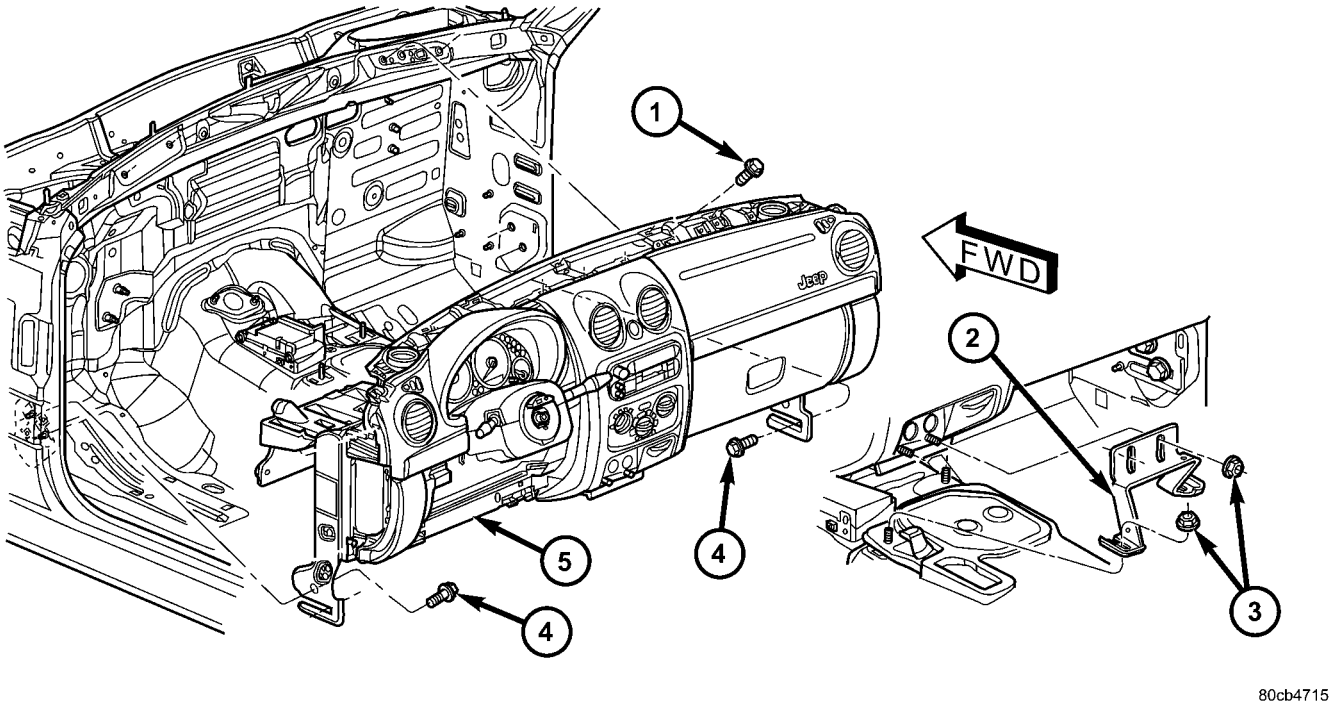

Fig. 10 INSTRUMENT PANEL ASSEMBLY

1 - TOP BOLTS (4)
2 - CENTER SUPPORT BRACKET
3 - NUTS (4)
4 - ROLL DOWN BOLTS (4)
5 - INSTRUMENT PANEL ASSEMBLY

INSTALLATION

WARNING: ON VEHICLES EQUIPPED WITH AIRBAGS, DISABLE THE AIRBAG SYSTEM BEFORE ATTEMPTING ANY STEERING WHEEL, STEERING COLUMN, OR INSTRUMENT PANEL COMPONENT DIAGNOSIS OR SERVICE. DISCONNECT AND ISOLATE THE BATTERY NEGATIVE (GROUND) CABLE, THEN WAIT TWO MINUTES FOR THE AIRBAG SYSTEM CAPACITOR TO DISCHARGE BEFORE PERFORMING FURTHER DIAGNOSIS OR SERVICE. THIS IS THE ONLY SURE WAY TO DISABLE THE AIRBAG SYSTEM. FAILURE TO TAKE THE PROPER PRECAUTIONS COULD RESULT IN ACCIDENTAL AIRBAG DEPLOYMENT AND POSSIBLE PERSONAL INJURY.

(1) Position the instrument panel into the vehicle.
(2) Position the wire harness into the rear routing channel and roll the instrument panel back against the cowl.
(3) Position the radio wire harness and seat the push pin fastener.

NOTE: Position the speaker wires through the speaker openings.

(4) Install the four bolts at the top of the instrument panel connecting to the cowl front panel and tighten to 28 N·m (21 ft. lbs.).
(5) Connect the blend door electrical connector.
(6) Connect the blower motor electrical connector.
(7) Connect the vacuum check valve and the vacuum reservoir.
(8) Connect the blower resister electrical connector.

NOTE: Do not push or pull bracket. Tighten at the rest position.

(9) Install the two roll down bracket bolts at the passenger cowl side panel and tighten to 54 N·m (40 ft. lbs.).
(10) Install the HVAC mounting bolt at the lower outside corner of the glove box opening and tighten to 6 N·m (55 in. lbs.).
(11) Install the HVAC mounting bolt above the glove box striker.
(12) Install the passenger side trim bezel. (Refer to 23 - BODY/INSTRUMENT PANEL/INSTRUMENT PANEL PASSENGER SIDE BEZEL - INSTALLATION)

INSTRUMENT PANEL ASSEMBLY (Continued)

(13) Install the passenger side cowl trim cover. (Refer to 23 - BODY/INTERIOR/COWL TRIM COVER - INSTALLATION)

(14) Install the two HVAC mounting bolts behind the center trim.

(15) Install the glove box. (Refer to 23 - BODY/INSTRUMENT PANEL/GLOVE BOX - INSTALLATION)

NOTE: Do not push or pull bracket. Tighten at the rest position.

(16) Install the two roll down bracket bolts at the drivers cowl side panel and tighten to 54 N·m (40 ft. lbs.).

(17) Install the two bolts at the bottom side of the pedal support bracket.

(18) Install the two bolts at the front of the pedal support bracket.

(19) Connect the electrical connector at the inner side of the pedal support bracket.

(20) Connect the wiring harness electrical connectors at the junction block.

(21) Connect the wire harness electrical connector behind the drivers side cowl trim cover.

(22) Install the drivers side cowl trim cover. (Refer to 23 - BODY/INTERIOR/COWL TRIM COVER - INSTALLATION)

CAUTION: Do not remove the brake lamp switch. This is a one time component and is not intended for reinstallation. If the brake lamp switch is removed it must be discarded and replaced with a new switch.

(23) Connect the bake lamp switch electrical connector.

(24) Install the steering column into the vehicle.

(25) Slide the shifter interlock cable into the tie straps.

(26) Install and connect the wire harness for the column.

(27) Install the two mounting nuts and the two mounting bolts all finger tight.

CAUTION: Lower nuts must be installed and tightened first then the upper nuts in order to prevent damage to the capsules.

(28) Tighten the lower mounting nuts to 17 N·m (13 ft. lbs.).

(29) Tighten the upper mounting nuts to 17 N·m (13 ft. lbs.).

(30) Install the steering column coupler bolt and tighten to 49 N·m (36 ft. lbs.).

(31) Install the upper and lower shrouds and install the screws.

(32) Install the knee blocker cover and knee blocker. (Refer to 23 - BODY/INSTRUMENT PANEL/KNEE BLOCKER - INSTALLATION)

(33) Install the ground strap and bolt and connect the restraint module electrical connector.

(34) Install the center support bracket and hold it tight against the instrument panel.

(35) Tighten the lower nuts to 23 N·m (17 ft. lbs.).

(36) Tighten the upper bracket nuts to 23 N·m (17 ft. lbs.).

(37) Install the radio. (Refer to 8 - ELECTRICAL/AUDIO/RADIO - INSTALLATION)

(38) Install the floor console. (Refer to 23 - BODY/INTERIOR/FLOOR CONSOLE - INSTALLATION)

(39) Install the speakers. (Refer to 8 - ELECTRICAL/AUDIO/SPEAKER - INSTALLATION)

(40) Reconnect the battery ground cable.

INSTRUMENT PANEL TOP COVER

REMOVAL

WARNING: ON VEHICLES EQUIPPED WITH AIRBAGS, DISABLE THE AIRBAG SYSTEM BEFORE ATTEMPTING ANY STEERING WHEEL, STEERING COLUMN, SEAT BELT TENSIONER, OR INSTRUMENT PANEL COMPONENT DIAGNOSIS OR SERVICE. DISCONNECT AND ISOLATE THE BATTERY NEGATIVE (GROUND) CABLE, THEN WAIT TWO MINUTES FOR THE AIRBAG SYSTEM CAPACITOR TO DISCHARGE BEFORE PERFORMING FURTHER DIAGNOSIS OR SERVICE. THIS IS THE ONLY SURE WAY TO DISABLE THE AIRBAG SYSTEM. FAILURE TO TAKE THE PROPER PRECAUTIONS COULD RESULT IN ACCIDENTAL AIRBAG DEPLOYMENT AND POSSIBLE PERSONAL INJURY.

(1) Remove the a-pillar trim. (Refer to 23 - BODY/INTERIOR/A-PILLAR TRIM AND GRAB HANDLE - REMOVAL)

(2) Using a trim stick C-4755 or equivalent, release the attachment clips and remove the top cover. (Fig. 11)

INSTRUMENT PANEL TOP COVER (Continued)

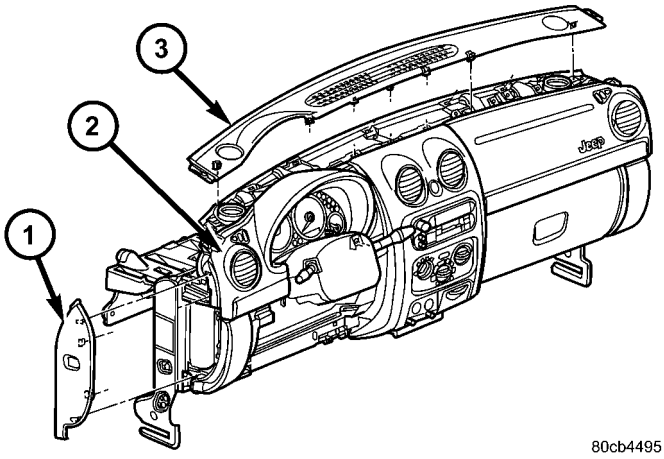

Fig. 11 INSTRUMENT PANEL COVERS

1 - SIDE COVER
2 - INSTRUMENT PANEL ASSEMBLY
3 - TOP COVER

INSTALLATION

WARNING: ON VEHICLES EQUIPPED WITH AIRBAGS, DISABLE THE AIRBAG SYSTEM BEFORE ATTEMPTING ANY STEERING WHEEL, STEERING COLUMN, SEAT BELT TENSIONER, OR INSTRUMENT PANEL COMPONENT DIAGNOSIS OR SERVICE. DISCONNECT AND ISOLATE THE BATTERY NEGATIVE (GROUND) CABLE, THEN WAIT TWO MINUTES FOR THE AIRBAG SYSTEM CAPACITOR TO DISCHARGE BEFORE PERFORMING FURTHER DIAGNOSIS OR SERVICE. THIS IS THE ONLY SURE WAY TO DISABLE THE AIRBAG SYSTEM. FAILURE TO TAKE THE PROPER PRECAUTIONS COULD RESULT IN ACCIDENTAL AIRBAG DEPLOYMENT AND POSSIBLE PERSONAL INJURY.

(1) Position the top cover and seat the clips fully.
(2) Install the a-pillar trim panels. (Refer to 23 - BODY/INTERIOR/A-PILLAR TRIM AND GRAB HANDLE - INSTALLATION)

INSTRUMENT PANEL END CAP

REMOVAL

WARNING: ON VEHICLES EQUIPPED WITH AIRBAGS, DISABLE THE AIRBAG SYSTEM BEFORE ATTEMPTING ANY STEERING WHEEL, STEERING COLUMN, SEAT BELT TENSIONER, OR INSTRUMENT PANEL COMPONENT DIAGNOSIS OR SERVICE. DISCONNECT AND ISOLATE THE BATTERY NEGATIVE (GROUND) CABLE, THEN WAIT TWO MINUTES FOR THE AIRBAG SYSTEM CAPACITOR TO DISCHARGE BEFORE PERFORMING FURTHER DIAGNOSIS OR SERVICE. THIS IS THE ONLY SURE WAY TO DISABLE THE AIRBAG SYSTEM. FAILURE TO TAKE THE PROPER PRECAUTIONS COULD RESULT IN ACCIDENTAL AIRBAG DEPLOYMENT AND POSSIBLE PERSONAL INJURY.

(1) Open the door.
(2) Using the finger indent, grasp and remove the side cover. (Fig. 11)

INSTALLATION

WARNING: ON VEHICLES EQUIPPED WITH AIRBAGS, DISABLE THE AIRBAG SYSTEM BEFORE ATTEMPTING ANY STEERING WHEEL, STEERING COLUMN, SEAT BELT TENSIONER, OR INSTRUMENT PANEL COMPONENT DIAGNOSIS OR SERVICE. DISCONNECT AND ISOLATE THE BATTERY NEGATIVE (GROUND) CABLE, THEN WAIT TWO MINUTES FOR THE AIRBAG SYSTEM CAPACITOR TO DISCHARGE BEFORE PERFORMING FURTHER DIAGNOSIS OR SERVICE. THIS IS THE ONLY SURE WAY TO DISABLE THE AIRBAG SYSTEM. FAILURE TO TAKE THE PROPER PRECAUTIONS COULD RESULT IN ACCIDENTAL AIRBAG DEPLOYMENT AND POSSIBLE PERSONAL INJURY.

(1) Position the side panels and seat the clips fully.

INSTRUMENT PANEL DRIVER SIDE BEZELS

REMOVAL

WARNING: ON VEHICLES EQUIPPED WITH AIRBAGS, DISABLE THE AIRBAG SYSTEM BEFORE ATTEMPTING ANY STEERING WHEEL, STEERING COLUMN, SEAT BELT TENSIONER, OR INSTRUMENT PANEL COMPONENT DIAGNOSIS OR SERVICE. DISCONNECT AND ISOLATE THE BATTERY NEGATIVE (GROUND) CABLE, THEN WAIT TWO MINUTES FOR THE AIRBAG SYSTEM CAPACITOR TO DISCHARGE BEFORE PERFORMING FURTHER DIAGNOSIS OR SERVICE. THIS IS THE ONLY SURE WAY TO DISABLE THE AIRBAG SYSTEM. FAILURE TO TAKE THE PROPER PRECAUTIONS COULD RESULT IN ACCIDENTAL AIRBAG DEPLOYMENT AND POSSIBLE PERSONAL INJURY.

(1) Using a trim stick C-4755 or equivalent, disengage the bezels on either side of the steering column. (Fig. 12)

INSTRUMENT PANEL DRIVER SIDE BEZELS (Continued)

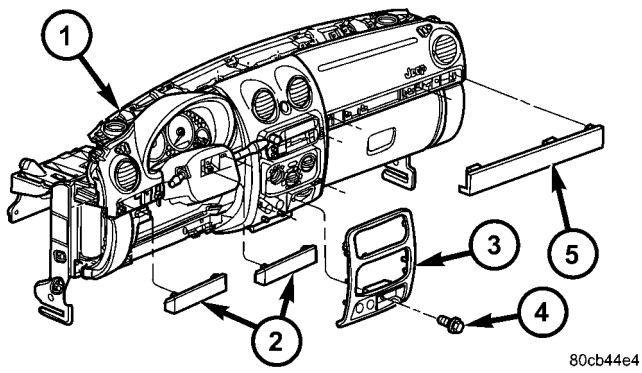

Fig. 12 INSTRUMENT PANEL TRIM BEZELS

1 - INSTRUMENT PANEL
2 - DRIVERS SIDE TRIM BEZELS
3 - CENTER TRIM BEZEL
4 - SCREW
5 - PASSENGER SIDE TRIM BEZEL

INSTALLATION

WARNING: ON VEHICLES EQUIPPED WITH AIRBAGS, DISABLE THE AIRBAG SYSTEM BEFORE ATTEMPTING ANY STEERING WHEEL, STEERING COLUMN, SEAT BELT TENSIONER, OR INSTRUMENT PANEL COMPONENT DIAGNOSIS OR SERVICE. DISCONNECT AND ISOLATE THE BATTERY NEGATIVE (GROUND) CABLE, THEN WAIT TWO MINUTES FOR THE AIRBAG SYSTEM CAPACITOR TO DISCHARGE BEFORE PERFORMING FURTHER DIAGNOSIS OR SERVICE. THIS IS THE ONLY SURE WAY TO DISABLE THE AIRBAG SYSTEM. FAILURE TO TAKE THE PROPER PRECAUTIONS COULD RESULT IN ACCIDENTAL AIRBAG DEPLOYMENT AND POSSIBLE PERSONAL INJURY.

(1) Position the appropriate divers side bezels on either side of the steering column and seat the attachment clips.

INSTRUMENT PANEL CENTER BEZEL

REMOVAL

WARNING: ON VEHICLES EQUIPPED WITH AIRBAGS, DISABLE THE AIRBAG SYSTEM BEFORE ATTEMPTING ANY STEERING WHEEL, STEERING COLUMN, SEAT BELT TENSIONER, OR INSTRUMENT PANEL COMPONENT DIAGNOSIS OR SERVICE. DISCONNECT AND ISOLATE THE BATTERY NEGATIVE (GROUND) CABLE, THEN WAIT TWO MINUTES FOR THE AIRBAG SYSTEM CAPACITOR TO DISCHARGE BEFORE PERFORMING FURTHER DIAGNOSIS OR SERVICE. THIS IS THE ONLY SURE WAY TO DISABLE THE AIRBAG SYSTEM. FAILURE TO TAKE THE PROPER PRECAUTIONS COULD RESULT IN ACCIDENTAL AIRBAG DEPLOYMENT AND POSSIBLE PERSONAL INJURY.

(1) Remove the screw from inside the cubby bin next to the power outlet.

(2) Using a trim stick C-4755 or equivalent, remove the center bezel from the instrument panel assembly. (Fig. 12)

(3) Disconnect the electrical and vacuum connectors.

INSTALLATION

WARNING: ON VEHICLES EQUIPPED WITH AIRBAGS, DISABLE THE AIRBAG SYSTEM BEFORE ATTEMPTING ANY STEERING WHEEL, STEERING COLUMN, SEAT BELT TENSIONER, OR INSTRUMENT PANEL COMPONENT DIAGNOSIS OR SERVICE. DISCONNECT AND ISOLATE THE BATTERY NEGATIVE (GROUND) CABLE, THEN WAIT TWO MINUTES FOR THE AIRBAG SYSTEM CAPACITOR TO DISCHARGE BEFORE PERFORMING FURTHER DIAGNOSIS OR SERVICE. THIS IS THE ONLY SURE WAY TO DISABLE THE AIRBAG SYSTEM. FAILURE TO TAKE THE PROPER PRECAUTIONS COULD RESULT IN ACCIDENTAL AIRBAG DEPLOYMENT AND POSSIBLE PERSONAL INJURY.

(1) Connect the electrical and vacuum connectors.

(2) Position the center bezel and seat the retaining clips starting with the lower clips first.

(3) Install the screw in the cubby bin next to the power outlet.

INSTRUMENT PANEL PASSENGER SIDE BEZEL

REMOVAL

WARNING: ON VEHICLES EQUIPPED WITH AIRBAGS, DISABLE THE AIRBAG SYSTEM BEFORE ATTEMPTING ANY STEERING WHEEL, STEERING COLUMN, SEAT BELT TENSIONER, OR INSTRUMENT PANEL COMPONENT DIAGNOSIS OR SERVICE. DISCONNECT AND ISOLATE THE BATTERY NEGATIVE (GROUND) CABLE, THEN WAIT TWO MINUTES FOR THE AIRBAG SYSTEM CAPACITOR TO DISCHARGE BEFORE PERFORMING FURTHER DIAGNOSIS OR SERVICE. THIS IS THE ONLY SURE WAY TO DISABLE THE AIRBAG SYSTEM. FAILURE TO TAKE THE PROPER PRECAUTIONS COULD RESULT IN ACCIDENTAL AIRBAG DEPLOYMENT AND POSSIBLE PERSONAL INJURY.

INSTRUMENT PANEL PASSENGER SIDE BEZEL (Continued)

On vehicles equipped with a grab handle:

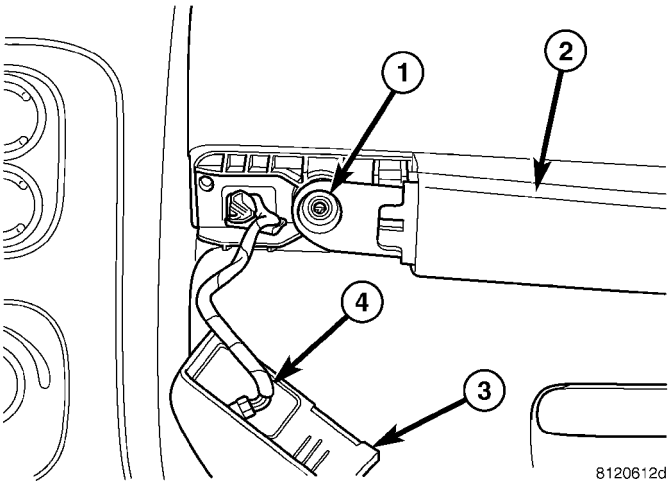

Fig. 13 GRAB HANDLE

1 - GRAB HANDLE SCREWS (2)
2 - GRAB HANDLE
3 - END CAPS (2)
4 - ELECTRICAL CONNECTOR

(1) Using a trim stick C-4755 or equivalent, remove the grab handle end caps. (Fig. 13)
(2) Disconnect the electrical connector, if equipped.
(3) Remove the grab handle screws.
(4) Remove the grab handle and bezel assembly.

On vehicles without a grab handle:

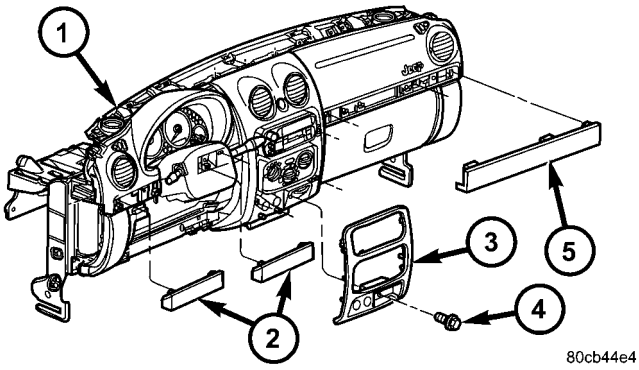

Fig. 14 INSTRUMENT PANEL COVERS

1 - INSTRUMENT PANEL
2 - DRIVERS SIDE TRIM BEZELS
3 - CENTER TRIM BEZEL
4 - SCREW
5 - PASSENGER SIDE TRIM BEZEL

(1) Using a trim stick C-4755 or equivalent, release the retaining clips and remove the passenger side bezel. (Fig. 14)

INSTALLATION

WARNING: ON VEHICLES EQUIPPED WITH AIRBAGS, DISABLE THE AIRBAG SYSTEM BEFORE ATTEMPTING ANY STEERING WHEEL, STEERING COLUMN, SEAT BELT TENSIONER, OR INSTRUMENT PANEL COMPONENT DIAGNOSIS OR SERVICE. DISCONNECT AND ISOLATE THE BATTERY NEGATIVE (GROUND) CABLE, THEN WAIT TWO MINUTES FOR THE AIRBAG SYSTEM CAPACITOR TO DISCHARGE BEFORE PERFORMING FURTHER DIAGNOSIS OR SERVICE. THIS IS THE ONLY SURE WAY TO DISABLE THE AIRBAG SYSTEM. FAILURE TO TAKE THE PROPER PRECAUTIONS COULD RESULT IN ACCIDENTAL AIRBAG DEPLOYMENT AND POSSIBLE PERSONAL INJURY.

On vehicles without a grab handle:

(1) Position the passenger side bezel and seat the retaining clips.

On vehicles equipped with a grab handle:

(1) Install the grab handle and bezel assembly and install the screws.
(2) Connect the electrical connector, if equipped.
(3) Position the end caps in place and seat fully.

KNEE BLOCKER

REMOVAL

WARNING: ON VEHICLES EQUIPPED WITH AIRBAGS, DISABLE THE AIRBAG SYSTEM BEFORE ATTEMPTING ANY STEERING WHEEL, STEERING COLUMN, SEAT BELT TENSIONER, OR INSTRUMENT PANEL COMPONENT DIAGNOSIS OR SERVICE. DISCONNECT AND ISOLATE THE BATTERY NEGATIVE (GROUND) CABLE, THEN WAIT TWO MINUTES FOR THE AIRBAG SYSTEM CAPACITOR TO DISCHARGE BEFORE PERFORMING FURTHER DIAGNOSIS OR SERVICE. THIS IS THE ONLY SURE WAY TO DISABLE THE AIRBAG SYSTEM. FAILURE TO TAKE THE PROPER PRECAUTIONS COULD RESULT IN ACCIDENTAL AIRBAG DEPLOYMENT AND POSSIBLE PERSONAL INJURY.

(1) Reach into the steering column opening at the top of the knee blocker and pull the top rearward to disengage upper knee blocker clips. (Fig. 15)

KNEE BLOCKER (Continued)

(2) Gently swing the knee blocker open.

(3) Slide the knee blocker toward the driver side door and disengage the hinges from the molded in hinge pins in the instrument panel.

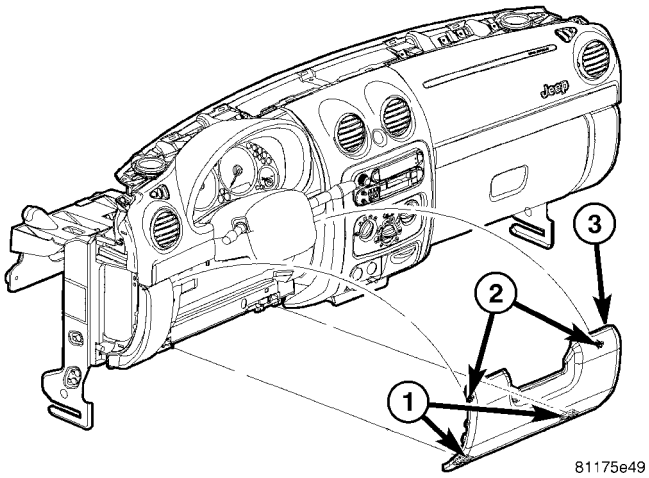

Fig. 15 KNEE BLOCKER ASSEMBLY

1 - HINGES
2 - RETAINING CLIPS
3 - KNEE BLOCKER

INSTALLATION

WARNING: ON VEHICLES EQUIPPED WITH AIRBAGS, DISABLE THE AIRBAG SYSTEM BEFORE ATTEMPTING ANY STEERING WHEEL, STEERING COLUMN, SEAT BELT TENSIONER, OR INSTRUMENT PANEL COMPONENT DIAGNOSIS OR SERVICE. DISCONNECT AND ISOLATE THE BATTERY NEGATIVE (GROUND) CABLE, THEN WAIT TWO MINUTES FOR THE AIRBAG SYSTEM CAPACITOR TO DISCHARGE BEFORE PERFORMING FURTHER DIAGNOSIS OR SERVICE. THIS IS THE ONLY SURE WAY TO DISABLE THE AIRBAG SYSTEM. FAILURE TO TAKE THE PROPER PRECAUTIONS COULD RESULT IN ACCIDENTAL AIRBAG DEPLOYMENT AND POSSIBLE PERSONAL INJURY.

(1) With the knee blocker close to a horizontal position, align both knee blocker hinges to the tabs at the bottom edge of the instrument panel.

(2) engage the hinges by sliding them toward the center of the vehicle as far as they can go.

(3) Gently swing the knee blocker upward until the clips touch the corresponding slots in the instrument panel and engage fully.

INTERIOR

TABLE OF CONTENTS

page

4WD FLOOR SHIFT BOOT
REMOVAL 70
INSTALLATION 70
A-PILLAR TRIM AND GRAB HANDLE
REMOVAL 70
INSTALLATION 70
COWL TRIM COVER
REMOVAL 71
INSTALLATION 71
DOOR SILL SCUFF PLATE
REMOVAL 71
INSTALLATION 71
ASSIST HANDLE
REMOVAL 71
INSTALLATION 71
B-PILLAR LOWER TRIM
REMOVAL 71
INSTALLATION 71
B-PILLAR UPPER TRIM
REMOVAL 71
INSTALLATION 72
CARPETS AND FLOOR MATS
REMOVAL 72
INSTALLATION 72
SHIFT BEZEL
REMOVAL 72
INSTALLATION 72

page

FLOOR CONSOLE
REMOVAL 72
INSTALLATION 72
FLOOR CONSOLE LID LATCH
REMOVAL 73
INSTALLATION 73
HEADLINER
REMOVAL 73
INSTALLATION 73
QUARTER TRIM PANEL
REMOVAL 73
INSTALLATION 74
REAR DOOR SCUFF PLATE
REMOVAL 74
INSTALLATION 74
SUN VISOR
REMOVAL 74
INSTALLATION 74
SUN VISOR SUPPORT
REMOVAL 74
INSTALLATION 74
REAR VIEW MIRROR
REMOVAL 75
INSTALLATION
INSTALLATION 75
INSTALLATION - REAR VIEW MIRROR SUPPORT BRACKET 75

4WD FLOOR SHIFT BOOT

REMOVAL

(1) Remove the shift lever and remove the boot from the lever. (Refer to 21 - TRANSMISSION/TRANSAXLE/TRANSFER CASE/SHIFT LEVER - REMOVAL)

INSTALLATION

(1) Install the shift boot onto the shift lever and install the lever. (Refer to 21 - TRANSMISSION/TRANSAXLE/TRANSFER CASE/SHIFT LEVER - INSTALLATION)

A-PILLAR TRIM AND GRAB HANDLE

REMOVAL

(1) Using a small pry tool or equivalent, remove the grab handle trim plugs.
(2) Remove the two grab handle screws.
(3) Remove the grab handle and a-pillar trim from the a-pillar.

INSTALLATION

(1) Snap a-pillar trim and grab handle into the a-pillar.
(2) Install the two screws and install the grab handle trim plugs.

COWL TRIM COVER

REMOVAL

(1) Using a trim stick C-4755 or equivalent, lift up the front edge of the lower b-pillar trim and position aside. (Refer to 23 - BODY/INTERIOR/B-PILLAR LOWER TRIM - REMOVAL)

(2) Remove the cowl trim cover by pulling it away from the a-pillar and releasing the clips.

INSTALLATION

(1) Install the cowl trim cover and seat the retaining clips.

(2) Position the b-pillar trim panel and seat the retaining clips.

DOOR SILL SCUFF PLATE

REMOVAL

(1) Using a trim stick C-4755 or equivalent, pry up the scuff plate releasing the retaining clips.

INSTALLATION

(1) Position the scuff plate and seat the retaining clips.

ASSIST HANDLE

REMOVAL

(1) Using a small pry tool or equivalent, release the assist handle by prying out the clips at either end. (Fig. 1)

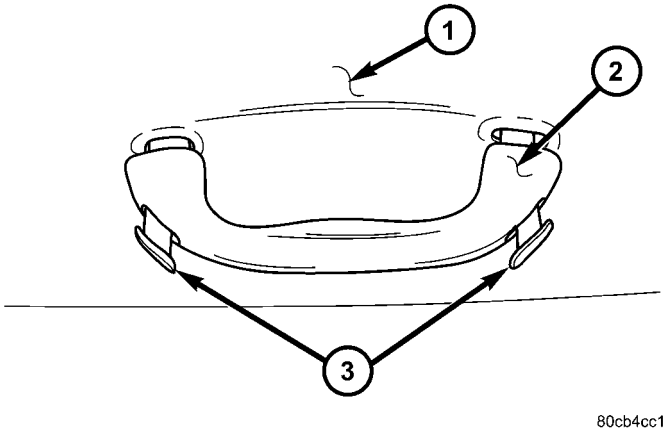

Fig. 1 ASSIST HANDLE

1 - HEADLINER
2 - ASSIST HANDLE
3 - RETAINING CLIPS

INSTALLATION

(1) Position the assist handle and seat the retaining clips.

B-PILLAR LOWER TRIM

REMOVAL

(1) Using a trim stick C-4755 or equivalent, pry up the trim panel, releasing the retaining clips. (Fig. 2)

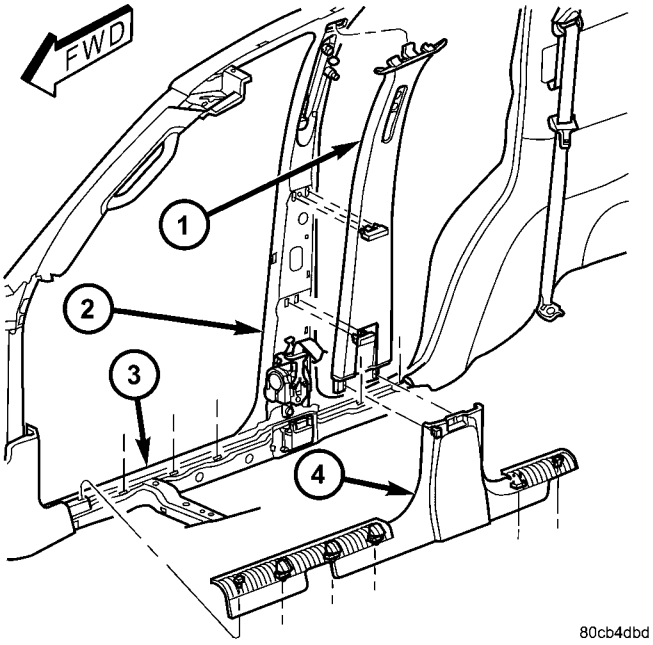

Fig. 2 B-PILLAR TRIM PANELS

1 - UPPER B-PILLAR TRIM
2 - B-PILLAR
3 - DOOR SILL
4 - LOWER B-PILLAR

INSTALLATION

(1) Position the trim panel and seat the retaining clips.

B-PILLAR UPPER TRIM

REMOVAL

(1) Remove the lower b-pillar trim panel. (Refer to 23 - BODY/INTERIOR/B-PILLAR LOWER TRIM - REMOVAL)

(2) Remove the shoulder belt turning loop. (Refer to 8 - ELECTRICAL/RESTRAINTS/SEAT BELT & RETRACTOR - REMOVAL)

(3) Using a trim stick C-4755 or equivalent, release the trim retaining clips and remove. (Fig. 2)

B-PILLAR UPPER TRIM (Continued)

INSTALLATION

(1) Position the trim panel and seat the retaining clips.

(2) Install the seat belt turning loop. (Refer to 8 - ELECTRICAL/RESTRAINTS/SEAT BELT & RETRACTOR - INSTALLATION)

(3) Install the b-pillar lower trim panel. (Refer to 23 - BODY/INTERIOR/B-PILLAR LOWER TRIM - INSTALLATION)

CARPETS AND FLOOR MATS

REMOVAL

Front Carpet

(1) Remove front seats. (Refer to 23 - BODY/SEATS/SEAT - FRONT - REMOVAL)

(2) Remove the floor console. (Refer to 23 - BODY/INTERIOR/FLOOR CONSOLE - REMOVAL)

(3) Remove the rear seats. (Refer to 23 - BODY/SEATS/SEAT - REAR - REMOVAL)

(4) Remove the cowl trim panels. (Refer to 23 - BODY/INTERIOR/COWL TRIM COVER - REMOVAL)

(5) Remove the b-pillar lower trim. (Refer to 23 - BODY/INTERIOR/B-PILLAR LOWER TRIM - REMOVAL)

(6) Remove the jack assembly.

(7) Remove the carpet.

Rear Cargo Carpet

(1) Remove the rivets attaching the cargo hooks to the floor.

(2) Remove the carpet.

INSTALLATION

Front Carpet

(1) Install the carpet.

(2) Install the jack assembly.

(3) Install the b-pillar lower trim. (Refer to 23 - BODY/INTERIOR/B-PILLAR LOWER TRIM - INSTALLATION)

(4) Install the cowl trim panels. (Refer to 23 - BODY/INTERIOR/COWL TRIM COVER - INSTALLATION)

(5) Install the rear seats. (Refer to 23 - BODY/SEATS/SEAT - REAR - INSTALLATION)

(6) Install the floor console. (Refer to 23 - BODY/INTERIOR/FLOOR CONSOLE - INSTALLATION)

(7) Install the front seats. (Refer to 23 - BODY/SEATS/SEAT - FRONT - INSTALLATION)

Rear Cargo Carpet

(1) Install the carpet and slide under the trim panels.

(2) Install new rivets securing the carpet and cargo hooks to the floor.

SHIFT BEZEL

REMOVAL

(1) Using a trim stick C-4755 or equivalent, pry shift bezel out of the floor console.

INSTALLATION

(1) Position the shift bezel and seat the retaining clips into the floor console.

FLOOR CONSOLE

REMOVAL

(1) Remove the shift bezel, if equipped. (Refer to 23 - BODY/INTERIOR/SHIFT BEZEL - REMOVAL)

(2) Set park brake lever in the up position.

(3) Using a trim stick C-4755 or equivalent, disconnect the manual trans shifter boot, if equipped.

(4) Using a trim stick C-4755 or equivalent, disconnect the transfer case shifter boot, if equipped.

(5) Remove the four bolts. (Fig. 3)

(6) Lift the console at the back and remove.

INSTALLATION

(1) Position the front of the console and lower the rear over the shifter and brake levers.

(2) Install the bolts.

(3) Install the shift boots and seat the retainer clips.

(4) Install the shift bezel. (Refer to 23 - BODY/INTERIOR/SHIFT BEZEL - INSTALLATION)

FLOOR CONSOLE (Continued)

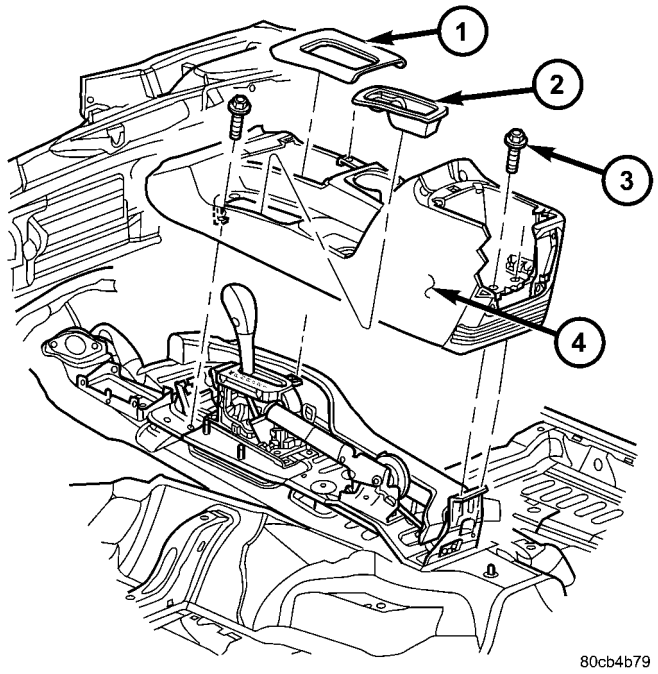

Fig. 3 FLOOR CONSOLE

1 - SHIFT BEZEL
2 - ACCESSORY CUP
3 - BOLTS (4)
4 - FLOOR CONSOLE

FLOOR CONSOLE LID LATCH

REMOVAL

(1) Remove the screws and remove the lid.

(2) Remove the screws attaching the lid cover and remove the latch.

INSTALLATION

(1) Install the latch and the lid cover.

(2) Install the screws attaching the lid cover.

(3) Install the console lid onto the console and install the screws.

HEADLINER

REMOVAL

(1) Remove the a-pillar trim. (Refer to 23 - BODY/INTERIOR/A-PILLAR TRIM AND GRAB HANDLE - REMOVAL)

(2) Remove the visors. (Refer to 23 - BODY/INTERIOR/SUN VISOR - REMOVAL)

(3) Remove the sun visor support. (Refer to 23 - BODY/INTERIOR/SUN VISOR SUPPORT - REMOVAL)

(4) Remove the overhead console. (Refer to 8 - ELECTRICAL/OVERHEAD CONSOLE - REMOVAL)

(5) Cut rear washer hose at the mark about halfway up the a-pillar.

(6) Remove the upper b-pillar trim. (Refer to 23 - BODY/INTERIOR/B-PILLAR UPPER TRIM - REMOVAL)

(7) Remove the assist handles. (Refer to 23 - BODY/INTERIOR/ASSIST HANDLE - REMOVAL)

(8) Remove the quarter trim. (Refer to 23 - BODY/INTERIOR/QUARTER TRIM PANEL - REMOVAL)

(9) Disconnect the electrical connector along the left d-pillar and remove the ground wire.

(10) Remove the dome light in the rear.

(11) Remove the sunroof opening trim lace, if equipped. (Refer to 23 - BODY/SUNROOF/OPENING TRIM LACE - REMOVAL)

(12) Remove the rear washer nozzle.

(13) Remove the headliner.

INSTALLATION

(1) Install the headliner.

(2) Install the assist handles. (Refer to 23 - BODY/INTERIOR/ASSIST HANDLE - INSTALLATION)

(3) Install the visors. (Refer to 23 - BODY/INTERIOR/SUN VISOR - INSTALLATION)

(4) Install the visor supports. (Refer to 23 - BODY/INTERIOR/SUN VISOR SUPPORT - INSTALLATION)

(5) Install the overhead console. (Refer to 8 - ELECTRICAL/OVERHEAD CONSOLE - INSTALLATION)

(6) Connect the rear washer hose, previously cut, with a hose junction.

(7) Install the a-pillar trim and grab handles. (Refer to 23 - BODY/INTERIOR/A-PILLAR TRIM - INSTALLATION)

(8) Install the upper b-pillar trim. (Refer to 23 - BODY/INTERIOR/B-PILLAR UPPER TRIM - INSTALLATION)

(9) Install the rear washer nozzle.

(10) Connect the electrical connector and ground wire at the left d-pillar.

(11) Install the quarter trim panels. (Refer to 23 - BODY/INTERIOR/QUARTER TRIM PANEL - INSTALLATION)

(12) Install the rear dome light.

(13) Install the sunroof opening trim lace, if equipped. (Refer to 23 - BODY/SUNROOF/OPENING TRIM LACE - INSTALLATION)

QUARTER TRIM PANEL

REMOVAL

(1) Using a trim stick C-4755 or equivalent, remove the rear header trim.

(2) Using a trim stick C-4755 or equivalent, remove the rear sill plate.

(3) Remove the hook pin type connector.

QUARTER TRIM PANEL (Continued)

(4) Fold down the rear seat.
(5) Remove the seat belt anchor and pivot. (Refer to 8 - ELECTRICAL/RESTRAINTS/SEAT BELT & RETRACTOR - REMOVAL)
(6) Remove the belt access panel. (Fig. 4)
(7) Remove the storage cover.
(8) Disconnect the 12v power supply electrical connector, if equipped.

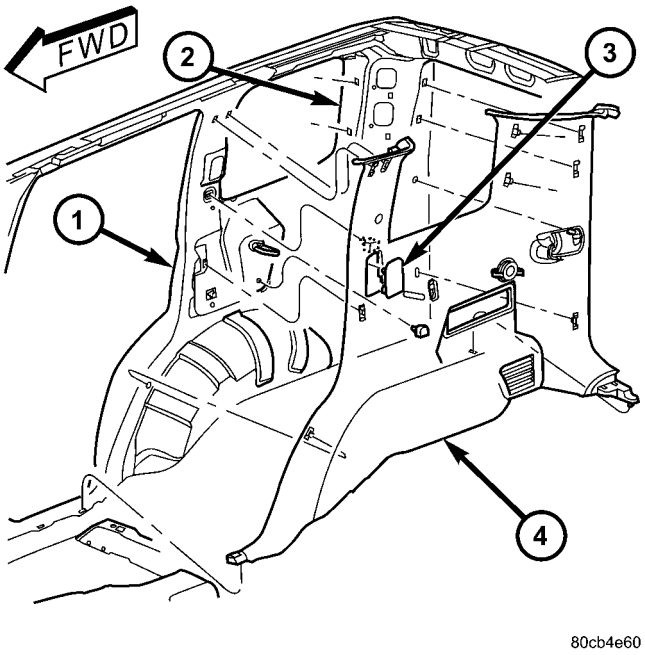

Fig. 4 QUARTER TRIM PANEL

1 - C-PILLAR
2 - D-PILLAR
3 - BELT ACCESS PANEL
4 - QUARTER TRIM PANEL

INSTALLATION

(1) Position the 12v power supply electrical connector, if equipped.
(2) Install the storage cover.
(3) Install the belt access panel.
(4) Install the seat belt anchor and pivot. (Refer to 8 - ELECTRICAL/RESTRAINTS/SEAT BELT & RETRACTOR - INSTALLATION)
(5) Install the hook pin type connector.
(6) Position the rear sill plate and seat the retaining clips.
(7) Position the rear header trim and seat the retaining clips.

REAR DOOR SCUFF PLATE

REMOVAL

(1) Using a trim stick C-4755 or equivalent, release the retaining clips and remove the scuff plate.

INSTALLATION

(1) Position the scuff plate and seat the retaining clips.

SUN VISOR

REMOVAL

(1) Remove the screws at the visor pivot.
(2) Disconnect the electrical connector and remove the visor.

INSTALLATION

(1) Connect the electrical connector and install the visor.
(2) Install the screws at the visor pivots.

SUN VISOR SUPPORT

REMOVAL

(1) Using a small pry tool or equivalent, release the support retaining clip by prying out and remove the support. (Fig. 5)

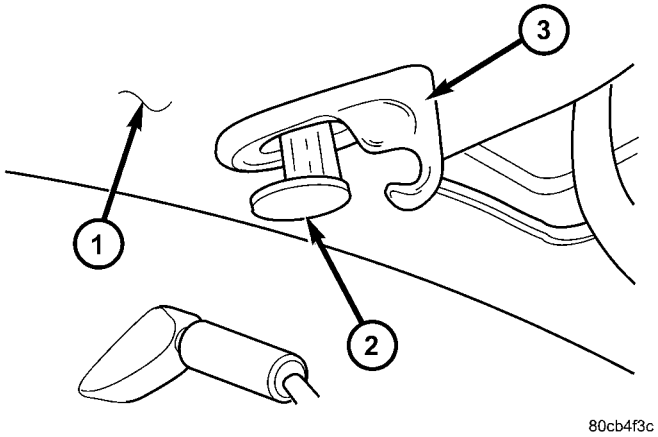

Fig. 5 SUN VISOR SUPPORT

1 - HEADLINER
2 - RETAINER CLIP
3 - SUN VISOR SUPPORT

INSTALLATION

(1) Position the visor support and seat the retaining clip.

REAR VIEW MIRROR

REMOVAL

(1) If equipped, disconnect mirror harness connector.

(2) Loosen the mirror base setscrew (Fig. 6).

(3) Slide the mirror base upward and off the bracket.

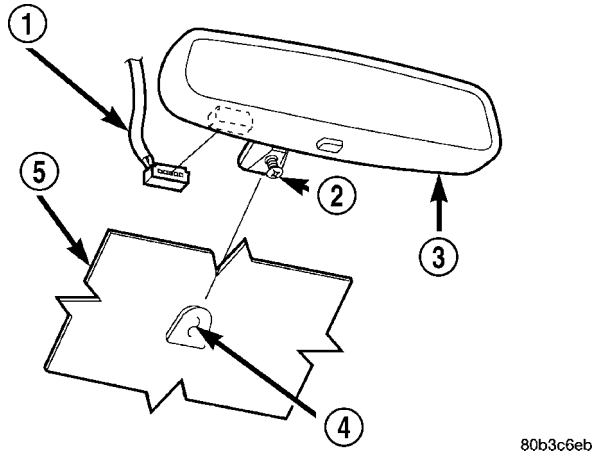

Fig. 6 REAR VIEW MIRROR

1 - CONNECTOR
2 - SCREW
3 - REAR VIEW MIRROR
4 - SUPPORT BUTTON
5 - WINDSHIELD

INSTALLATION

INSTALLATION

(1) Position the mirror base at the bracket and slide it downward onto the support bracket (Fig. 6).

(2) Tighten the setscrew 1 N·m (15 in. lbs.) torque.

(3) If equipped, connect mirror harness connector.

INSTALLATION - REAR VIEW MIRROR SUPPORT BRACKET

(1) Mark the position for the mirror bracket on the outside of the windshield glass with a wax pencil.

(2) Clean the bracket contact area on the glass. Use a mild powdered cleanser on a cloth saturated with isopropyl (rubbing) alcohol. Finally, clean the glass with a paper towel dampened with alcohol.

(3) Sand the surface on the support bracket with fine grit-sandpaper. Wipe the bracket surface clean with a paper towel.

(4) Apply accelerator to the surface on the bracket according to the following instructions:

(a) Crush the vial to saturate the felt applicator.

(b) Remove the paper sleeve.

(c) Apply accelerator to the contact surface on the bracket.

(d) Allow the accelerator to dry for five minutes.

(e) Do not touch the bracket contact surface after the accelerator has been applied.

(5) Apply adhesive accelerator to the bracket contact surface on the windshield glass. Allow the accelerator to dry for one minute. Do not touch the glass contact surface after the accelerator has been applied.

(6) Install the bracket according to the following instructions:

(a) Apply one drop of adhesive at the center of the bracket contact-surface on the windshield glass.

(b) Apply an even coat of adhesive to the contact surface on the bracket.

(c) Align the bracket with the marked position on the windshield glass.

(d) Press and hold the bracket in place for at least one minute.

NOTE: Verify that the mirror support bracket is correctly aligned, because the adhesive will cure rapidly.

(7) Allow the adhesive to cure for 8-10 minutes. Remove any excess adhesive with an alcohol-dampened cloth.

(8) Allow the adhesive to cure for an additional 8-10 minutes before installing the mirror.

PAINT

TABLE OF CONTENTS

page

PAINT
SPECIFICATIONS - PAINT CODES 76
PAINT CODE
DESCRIPTION 76
BASE COAT/CLEAR COAT FINISH
DESCRIPTION 77
PAINT TOUCH-UP
DESCRIPTION 77
FINESSE SANDING/BUFFING & POLISHING
DESCRIPTION 77

PAINT

SPECIFICATIONS - PAINT CODES

NOTE: Because of late model changes to the available paint colors (Refer to VEHICLE DATA/VEHICLE INFORMATION/VEHICLE CERTIFICATION LABEL - DESCRIPTION) or (Refer to VEHICLE DATA/VEHICLE INFORMATION/BODY CODE PLATE - DESCRIPTION) for the correct paint codes for each vehicle. (Refer to 23 - BODY/PAINT/PAINT CODE - DESCRIPTION)

EXTERIOR COLORS

EXTERIOR COLOR	DAIMLERCHRYSLER CODE
Flame Read Clearcoat	PR4
Light Khaki Metallic Clearcoat	AJC
Dark Khaki Pearlcoat	BJT
Deep Beryl Green Pearlcoat	CGV
Atlantic Blue Pearlcoat	ZBJ
Patriot Blue Pearlcoat	WB7
Bright Silver Metallic Clearcoat	WS2
Black Clearcoat	DX8
Stone White Clearcoat	SW1

INTERIOR COLORS

INTERIOR COLOR	DAIMLERCHRYSLER CODE
Slate Gray	D5
Khaki	J3
Khaki/Light Graystone	J1
Slate Gray/Light Slate Gray	DB

ACCESSORY COLORS

PART	COLOR	DAIMLERCHRYSLER CODE
Sport Accent Colors	Dark Medium Gray	BDL
Renegade Accent Colors	Medium Khaki	CJM
	Dark Slate	CD7

PAINT CODE

DESCRIPTION

Exterior vehicle body colors are identified on the Vehicle Certification Label (Refer to VEHICLE DATA/VEHICLE INFORMATION/VEHICLE CERTIFICATION LABEL - DESCRIPTION) or the Body Code Plate (Refer to VEHICLE DATA/VEHICLE INFORMATION/BODY CODE PLATE - DESCRIPTION). The first digit of the paint code listed on the vehicle indicates the sequence of application, i.e.: P = primary coat, Q = secondary coat. The color names provided in the Paint and Trim Code Description chart are the color names used on most repair product containers. (Refer to 23 - BODY/PAINT - SPECIFICATIONS)

BASE COAT/CLEAR COAT FINISH

DESCRIPTION

The original equipment finish is a multi step process that involves cleaning, applying electro de-position (E-coat), anti-chip primer, basecoat, and clearcoat steps.

On most vehicles a two-part paint application (basecoat/clearcoat) is used. Color paint that is applied to primer is called basecoat. The clear coat protects the basecoat from ultraviolet light and provides a durable high-gloss finish.

CAUTION: Do not use abrasive chemicals or compounds on painted surfaces. Damage to finish can result.
Do not use harsh alkaline based cleaning solvents on painted surfaces. Damage to finish or color can result.

PAINT TOUCH-UP

DESCRIPTION

When a painted metal surface has been scratched or chipped, it should be touched-up as soon as possible to avoid corrosion. For best results, use Mopar® Scratch Filler/Primer, Touch-Up Paints and Clear Topcoat. Refer to Introduction group of this manual for Body Code Plate information.

WARNING: USE AN OSHA APPROVED RESPIRATOR AND SAFETY GLASSES WHEN SPRAYING PAINT OR SOLVENTS IN A CONFINED AREA. PERSONAL INJURY CAN RESULT.

OPERATION

(1) Scrape loose paint and corrosion from inside scratch or chip.

(2) Clean affected area with Mopar® Tar/Road Oil Remover, and allow to dry.

(3) Fill the inside of the scratch or chip with a coat of filler/primer. Do not overlap primer onto good surface finish. The applicator brush should be wet enough to puddle-fill the scratch or chip without running. Do not stroke brush applicator on body surface. Allow the filler/primer to dry hard.

(4) Cover the filler/primer with color touch-up paint. Do not overlap touch-up color onto the original color coat around the scratch or chip. Butt the new color to the original color, if possible. Do not stroke applicator brush on body surface. Allow touch-up paint to dry hard.

(5) On vehicles without clearcoat, the touch-up color can be lightly finesse sanded (1500 grit) and polished with rubbing compound.

(6) On vehicles with clearcoat, apply clear top coat to touch-up paint with the same technique as described in Step 4. Allow clear topcoat to dry hard. If desired, Step 5 can be performed on clear topcoat.

WARNING: AVOID PROLONGED SKIN CONTACT WITH PETROLEUM OR ALCOHOL – BASED CLEANING SOLVENTS. PERSONAL INJURY CAN RESULT.
AVOID PROLONGED SKIN CONTACT WITH PETROLEUM OR ALCOHOL – BASED CLEANING SOLVENTS. PERSONAL INJURY CAN RESULT.

FINESSE SANDING/BUFFING & POLISHING

DESCRIPTION

CAUTION: Do not remove more than .5 mils of clearcoat finish, if equipped. Basecoat paint must retain clearcoat for durability.
Use a Paint Thickness Gauge #PR-ETG-2X or equivalent to determine film thickness before and after the repair.

Minor acid etching, orange peel, or smudging in clearcoat or single-stage finishes can be reduced with light finesse sanding, hand buffing, and polishing. **If the finish has been finesse sanded in the past, it cannot be repeated. Finesse sanding operation should be performed by a trained automotive paint technician.**

SEATS

TABLE OF CONTENTS

page

HEADREST
REMOVAL 78
INSTALLATION 78
HEADREST SLEEVE
REMOVAL 78
INSTALLATION 78
SEAT - FRONT
REMOVAL 79
INSTALLATION 79
SEAT BACK - FRONT
REMOVAL 81
INSTALLATION 82
SEAT BACK RECLINER - FRONT
REMOVAL 82
INSTALLATION 83
SEAT BACK COVER - FRONT
REMOVAL 83
INSTALLATION 84
SEAT BACK CUSHION - FRONT
REMOVAL 85
INSTALLATION 85
SEAT CUSHION - FRONT
REMOVAL 86
INSTALLATION 87
SEAT CUSHION COVER - FRONT
REMOVAL 88
INSTALLATION 89
MANUAL SEAT RISER
REMOVAL 90
INSTALLATION 91
SEAT TRACK
REMOVAL 91
INSTALLATION 92
SEAT - REAR
REMOVAL 92
INSTALLATION 93
SEAT BACK - REAR
REMOVAL 93
INSTALLATION 94
SEAT BACK COVER - REAR
REMOVAL 95
INSTALLATION 95
SEAT BACK CUSHION - REAR
REMOVAL 95
INSTALLATION 95
FOLDING REAR SEAT BACK LATCH / LOCK
REMOVAL 95
INSTALLATION 95
REAR SEAT BACK LATCH STRIKER
REMOVAL 96
INSTALLATION 96
SEAT BACK FRAME - REAR
REMOVAL 96
INSTALLATION 96
SEAT CUSHION - REAR
REMOVAL 96
INSTALLATION 96

HEADREST

REMOVAL

(1) Depress head restraint release button and lift head restraint to full up position.

(2) Using a small flat blade, depress tab on right side head restraint release button and using your hand, simultaneously press tab on left side head restraint release button and pull head restraint up to separate from seat back.

INSTALLATION

(1) Position head restraint in seat back, press tab on left side head restraint release button and push down head restraint to secure.

HEADREST SLEEVE

REMOVAL

(1) Remove the headrest. (Refer to 23 - BODY/SEATS/HEADREST - REMOVAL)

(2) Remove the headrest sleeve cover.

(3) Rotate head restraint sleeve 1/4 turn counter-clockwise to release retaining tab.

(4) Pull sleeve from seat back frame.

INSTALLATION

(1) Position sleeve in seat back frame.

(2) Rotate head restraint sleeve 1/4 turn clockwise to engage retaining tab.

(3) Install the headrest sleeve cover.

(4) Install the headrest. (Refer to 23 - BODY/SEATS/HEADREST - INSTALLATION)

SEAT - FRONT

REMOVAL

A non-calibrated Occupant Classification Module (OCM) is the only component of the Occupant Classification System (OCS) that is available for separate service replacement, as outlined in the procedures that follow. The OCS components of the passenger side front seat cushion including the cushion frame, springs, pad, occupant detection bladder, pressure sensor, seat cushion foam and the OCM are a factory-calibrated and assembled unit. Once this unit is connected to a vehicle electrically, the calibration settings are uploaded from the OCM and stored in the memory of the Airbag Control Module (ACM). If only the OCM is subsequently replaced, the new, non-calibrated OCM learns the proper calibration settings from the ACM after it is connected to the vehicle electrically.

If any of the remaining OCS components of the passenger side front seat cushion require replacement, they are serviced only as a factory-calibrated, assembled, and tamper-evident service replacement package. This package includes the assembled frame, springs, pad, bladder, sensor, foam, wiring and a calibrated OCM. When installing this package, always replace all of the existing components with the new components as a unit. Do not attempt to separate or disconnect any of the new OCS components contained in the service replacement package from each other, and do not attempt to reuse any of the replaced components in this or any other vehicle.

Once any of the original factory-installed components except the OCM have been replaced with the service replacement package components, the OCM can only be serviced by replacing the entire passenger side front seat cushion unit with another complete service replacement package. (Refer to 23 - BODY/SEATS/SEAT CUSHION - FRONT - REMOVAL).

WARNING: TO AVOID PERSONAL INJURY OR DEATH, ON VEHICLES EQUIPPED WITH AIRBAGS, DISABLE THE SUPPLEMENTAL RESTRAINT SYSTEM BEFORE ATTEMPTING ANY STEERING WHEEL, STEERING COLUMN, AIRBAG, OCCUPANT CLASSIFICATION SYSTEM, SEAT BELT TENSIONER, IMPACT SENSOR, OR INSTRUMENT PANEL COMPONENT DIAGNOSIS OR SERVICE. DISCONNECT AND ISOLATE THE BATTERY NEGATIVE (GROUND) CABLE, THEN WAIT TWO MINUTES FOR THE SYSTEM CAPACITOR TO DISCHARGE BEFORE PERFORMING FURTHER DIAGNOSIS OR SERVICE. THIS IS THE ONLY SURE WAY TO DISABLE THE SUPPLEMENTAL RESTRAINT SYSTEM. FAILURE TO TAKE THE PROPER PRECAUTIONS COULD RESULT IN ACCIDENTAL AIRBAG DEPLOYMENT.

WARNING: TO AVOID PERSONAL INJURY OR DEATH ON VEHICLES EQUIPPED WITH THE OCCUPANT CLASSIFICATION SYSTEM (OCS), ONLY THE OCCUPANT CLASSIFICATION MODULE (OCM) AND THE SEAT CUSHION TRIM MAY BE SERVICED SEPARATELY. ALL OTHER COMPONENTS OF THE PASSENGER SIDE FRONT SEAT CUSHION ASSEMBLY MUST BE SERVICED ONLY AS A COMPLETE FACTORY-CALIBRATED, ASSEMBLED AND TAMPER-EVIDENT SERVICE REPLACEMENT PACKAGE. THIS PACKAGE INCLUDES THE FRAME, SPRINGS, PAD, BLADDER, SENSOR, FOAM, WIRING AND A CALIBRATED OCM. WHEN INSTALLING THIS PACKAGE ALWAYS REPLACE ALL OF THE EXISTING COMPONENTS WITH THE NEW COMPONENTS AS A UNIT. DO NOT ATTEMPT TO SEPARATE OR DISCONNECT ANY OF THE NEW OCS COMPONENTS IN THE SERVICE REPLACEMENT PACKAGE FROM EACH OTHER, AND DO NOT ATTEMPT TO REUSE ANY OF THE REPLACED COMPONENTS IN THIS OR ANY OTHER VEHICLE. FAILURE TO TAKE THE PROPER PRECAUTIONS COULD RESULT IN FAILURE OF THE PASSENGER AIRBAG TO DEPLOY WHEN REQUIRED, OR IN PASSENGER AIRBAG DEPLOYMENT WHEN NOT REQUIRED.

(1) Remove the seat belt anchor bolt. (Refer to 8 - ELECTRICAL/RESTRAINTS/SEAT BELT & RETRACTOR - REMOVAL)

(2) Slide seat back and remove the front bolts. (Fig. 1)

(3) Slide seat to forward position and remove the rear bolt/nut.

(4) Disconnect the electrical connectors and remove the seat.

INSTALLATION

A non-calibrated Occupant Classification Module (OCM) is the only component of the Occupant Classification System (OCS) that is available for separate service replacement, as outlined in the procedures that follow. The OCS components of the passenger side front seat cushion including the cushion frame, springs, pad, occupant detection bladder, pressure sensor, seat cushion foam and the OCM are a factory-calibrated and assembled unit. Once this unit is connected to a vehicle electrically, the calibration settings are uploaded from the OCM and stored in the memory of the Airbag Control Module (ACM). If only the OCM is subsequently replaced, the new, non-calibrated OCM learns the proper calibration settings from the ACM after it is connected to the vehicle electrically.

SEAT - FRONT (Continued)

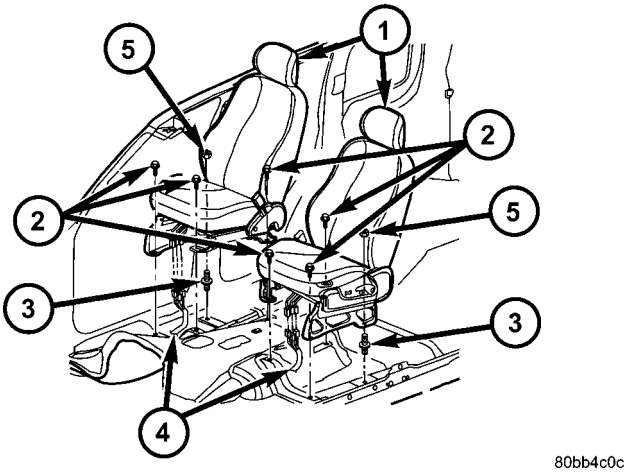

Fig. 1 FRONT SEATS

1 - FRONT SEATS
2 - BOLTS
3 - STUDS
4 - ELECTRICAL CONNECTORS
5 - NUTS

If any of the remaining OCS components of the passenger side front seat cushion require replacement, they are serviced only as a factory-calibrated, assembled, and tamper-evident service replacement package. This package includes the assembled frame, springs, pad, bladder, sensor, foam, wiring and a calibrated OCM. When installing this package, always replace all of the existing components with the new components as a unit. Do not attempt to separate or disconnect any of the new OCS components contained in the service replacement package from each other, and do not attempt to reuse any of the replaced components in this or any other vehicle.

Once any of the original factory-installed components except the OCM have been replaced with the service replacement package components, the OCM can only be serviced by replacing the entire passenger side front seat cushion unit with another complete service replacement package. (Refer to 23 - BODY/SEATS/SEAT CUSHION - FRONT - REMOVAL).

WARNING: TO AVOID PERSONAL INJURY OR DEATH, ON VEHICLES EQUIPPED WITH AIRBAGS, DISABLE THE SUPPLEMENTAL RESTRAINT SYSTEM BEFORE ATTEMPTING ANY STEERING WHEEL, STEERING COLUMN, AIRBAG, OCCUPANT CLASSIFICATION SYSTEM, SEAT BELT TENSIONER, IMPACT SENSOR, OR INSTRUMENT PANEL COMPONENT DIAGNOSIS OR SERVICE. DISCONNECT AND ISOLATE THE BATTERY NEGATIVE (GROUND) CABLE, THEN WAIT TWO MINUTES FOR THE SYSTEM CAPACITOR TO DISCHARGE BEFORE PERFORMING FURTHER DIAGNOSIS OR SERVICE. THIS IS THE ONLY SURE WAY TO DISABLE THE SUPPLEMENTAL RESTRAINT SYSTEM. FAILURE TO TAKE THE PROPER PRECAUTIONS COULD RESULT IN ACCIDENTAL AIRBAG DEPLOYMENT.

WARNING: TO AVOID PERSONAL INJURY OR DEATH ON VEHICLES EQUIPPED WITH THE OCCUPANT CLASSIFICATION SYSTEM (OCS), ONLY THE OCCUPANT CLASSIFICATION MODULE (OCM) AND THE SEAT CUSHION TRIM MAY BE SERVICED SEPARATELY. ALL OTHER COMPONENTS OF THE PASSENGER SIDE FRONT SEAT CUSHION ASSEMBLY MUST BE SERVICED ONLY AS A COMPLETE FACTORY-CALIBRATED, ASSEMBLED AND TAMPER-EVIDENT SERVICE REPLACEMENT PACKAGE. THIS PACKAGE INCLUDES THE FRAME, SPRINGS, PAD, BLADDER, SENSOR, FOAM, WIRING AND A CALIBRATED OCM. WHEN INSTALLING THIS PACKAGE ALWAYS REPLACE ALL OF THE EXISTING COMPONENTS WITH THE NEW COMPONENTS AS A UNIT. DO NOT ATTEMPT TO SEPARATE OR DISCONNECT ANY OF THE NEW OCS COMPONENTS IN THE SERVICE REPLACEMENT PACKAGE FROM EACH OTHER, AND DO NOT ATTEMPT TO REUSE ANY OF THE REPLACED COMPONENTS IN THIS OR ANY OTHER VEHICLE. FAILURE TO TAKE THE PROPER PRECAUTIONS COULD RESULT IN FAILURE OF THE PASSENGER AIRBAG TO DEPLOY WHEN REQUIRED, OR IN PASSENGER AIRBAG DEPLOYMENT WHEN NOT REQUIRED.

(1) Install the seats and connect the electrical connectors.

(2) Slide the seat to the rearward position and install the bolts.

(3) Tighten the outboard bolt to 43 N·m (32 ft. lbs.) and then tighten the inboard bolt to 43 N·m (32 ft. lbs.).

(4) Slide the seat to the forward position and install the rear bolt and nut.

(5) Tighten the fasteners to 43 N·m (32 ft. lbs.).

(6) Install the seat belt anchor and bolt. (Refer to 8 - ELECTRICAL/RESTRAINTS/SEAT BELT & RETRACTOR - INSTALLATION)

(7) Do not reconnect the battery negative cable at this time. The supplemental restraint system verification test procedure should be performed following service of any supplemental restraint system component. (Refer to 8 - ELECTRICAL/RESTRAINTS - STANDARD PROCEDURE - VERIFICATION TEST).

(8) Following successful completion of the supplemental restraint system verification test procedure, perform the Occupant Classification System Verification Test using a DRBIII® scan tool. Refer to the appropriate diagnostic procedures.

SEAT BACK - FRONT

REMOVAL

WARNING: TO AVOID PERSONAL INJURY OR DEATH, ON VEHICLES EQUIPPED WITH AIRBAGS, DISABLE THE SUPPLEMENTAL RESTRAINT SYSTEM BEFORE ATTEMPTING ANY STEERING WHEEL, STEERING COLUMN, AIRBAG, OCCUPANT CLASSIFICATION SYSTEM, SEAT BELT TENSIONER, IMPACT SENSOR, OR INSTRUMENT PANEL COMPONENT DIAGNOSIS OR SERVICE. DISCONNECT AND ISOLATE THE BATTERY NEGATIVE (GROUND) CABLE, THEN WAIT TWO MINUTES FOR THE SYSTEM CAPACITOR TO DISCHARGE BEFORE PERFORMING FURTHER DIAGNOSIS OR SERVICE. THIS IS THE ONLY SURE WAY TO DISABLE THE SUPPLEMENTAL RESTRAINT SYSTEM. FAILURE TO TAKE THE PROPER PRECAUTIONS COULD RESULT IN ACCIDENTAL AIRBAG DEPLOYMENT.

WARNING: TO AVOID PERSONAL INJURY OR DEATH ON VEHICLES EQUIPPED WITH THE OCCUPANT CLASSIFICATION SYSTEM (OCS), ONLY THE OCCUPANT CLASSIFICATION MODULE (OCM) AND THE SEAT CUSHION TRIM MAY BE SERVICED SEPARATELY. ALL OTHER COMPONENTS OF THE PASSENGER SIDE FRONT SEAT CUSHION ASSEMBLY MUST BE SERVICED ONLY AS A COMPLETE FACTORY-CALIBRATED, ASSEMBLED AND TAMPER-EVIDENT SERVICE REPLACEMENT PACKAGE. THIS PACKAGE INCLUDES THE FRAME, SPRINGS, PAD, BLADDER, SENSOR, FOAM, WIRING AND A CALIBRATED OCM. WHEN INSTALLING THIS PACKAGE ALWAYS REPLACE ALL OF THE EXISTING COMPONENTS WITH THE NEW COMPONENTS AS A UNIT. DO NOT ATTEMPT TO SEPARATE OR DISCONNECT ANY OF THE NEW OCS COMPONENTS IN THE SERVICE REPLACEMENT PACKAGE FROM EACH OTHER, AND DO NOT ATTEMPT TO REUSE ANY OF THE REPLACED COMPONENTS IN THIS OR ANY OTHER VEHICLE. FAILURE TO TAKE THE PROPER PRECAUTIONS COULD RESULT IN FAILURE OF THE PASSENGER AIRBAG TO DEPLOY WHEN REQUIRED, OR IN PASSENGER AIRBAG DEPLOYMENT WHEN NOT REQUIRED.

(1) Remove the seat. (Refer to 23 - BODY/SEATS/SEAT - FRONT - REMOVAL)

(2) Remove the seat cushion side shields.

(3) Remove the screw and disconnect the lock out cable from both recliners. (Fig. 2)

(4) Remove the bolts and remove the seat back. (Fig. 3)

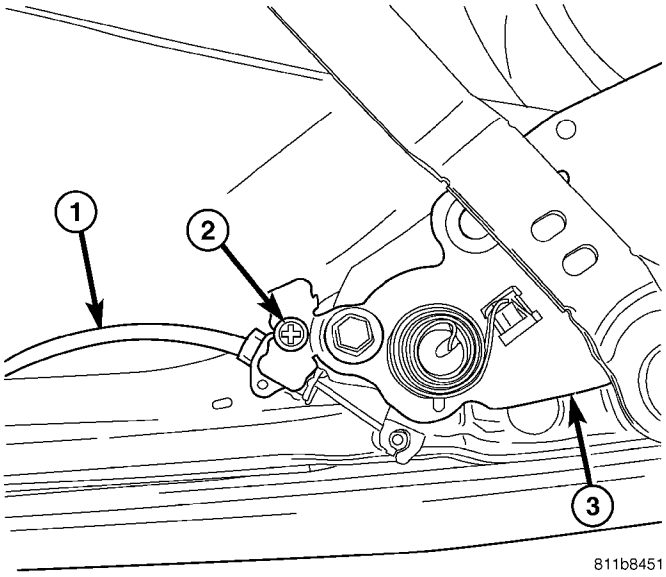

Fig. 2 RELEASE CABLE

1 - RELEASE CABLE
2 - SCREW
3 - RECLINER

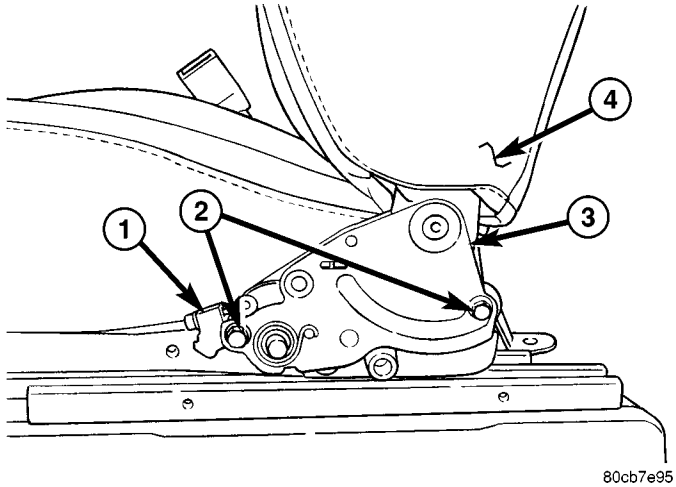

Fig. 3 SEAT BACK RECLINER

1 - LOCK OUT CABLE
2 - BOLTS
3 - RECLINER
4 - SEAT BACK

SEAT BACK - FRONT (Continued)

INSTALLATION

WARNING: TO AVOID PERSONAL INJURY OR DEATH, ON VEHICLES EQUIPPED WITH AIRBAGS, DISABLE THE SUPPLEMENTAL RESTRAINT SYSTEM BEFORE ATTEMPTING ANY STEERING WHEEL, STEERING COLUMN, AIRBAG, OCCUPANT CLASSIFICATION SYSTEM, SEAT BELT TENSIONER, IMPACT SENSOR, OR INSTRUMENT PANEL COMPONENT DIAGNOSIS OR SERVICE. DISCONNECT AND ISOLATE THE BATTERY NEGATIVE (GROUND) CABLE, THEN WAIT TWO MINUTES FOR THE SYSTEM CAPACITOR TO DISCHARGE BEFORE PERFORMING FURTHER DIAGNOSIS OR SERVICE. THIS IS THE ONLY SURE WAY TO DISABLE THE SUPPLEMENTAL RESTRAINT SYSTEM. FAILURE TO TAKE THE PROPER PRECAUTIONS COULD RESULT IN ACCIDENTAL AIRBAG DEPLOYMENT.

WARNING: TO AVOID PERSONAL INJURY OR DEATH ON VEHICLES EQUIPPED WITH THE OCCUPANT CLASSIFICATION SYSTEM (OCS), ONLY THE OCCUPANT CLASSIFICATION MODULE (OCM) AND THE SEAT CUSHION TRIM MAY BE SERVICED SEPARATELY. ALL OTHER COMPONENTS OF THE PASSENGER SIDE FRONT SEAT CUSHION ASSEMBLY MUST BE SERVICED ONLY AS A COMPLETE FACTORY-CALIBRATED, ASSEMBLED AND TAMPER-EVIDENT SERVICE REPLACEMENT PACKAGE. THIS PACKAGE INCLUDES THE FRAME, SPRINGS, PAD, BLADDER, SENSOR, FOAM, WIRING AND A CALIBRATED OCM. WHEN INSTALLING THIS PACKAGE ALWAYS REPLACE ALL OF THE EXISTING COMPONENTS WITH THE NEW COMPONENTS AS A UNIT. DO NOT ATTEMPT TO SEPARATE OR DISCONNECT ANY OF THE NEW OCS COMPONENTS IN THE SERVICE REPLACEMENT PACKAGE FROM EACH OTHER, AND DO NOT ATTEMPT TO REUSE ANY OF THE REPLACED COMPONENTS IN THIS OR ANY OTHER VEHICLE. FAILURE TO TAKE THE PROPER PRECAUTIONS COULD RESULT IN FAILURE OF THE PASSENGER AIRBAG TO DEPLOY WHEN REQUIRED, OR IN PASSENGER AIRBAG DEPLOYMENT WHEN NOT REQUIRED.

(1) Install the seat back and install the bolts.
(2) Tighten the bolts to 28 N·m (21 ft. lbs.).
(3) Connect the lock out cable to both recliners and install the screws.
(4) Install the belt buckle. (Refer to 8 - ELECTRICAL/RESTRAINTS/SEAT BELT BUCKLE - INSTALLATION)
(5) Install the side shields.
(6) Install the seat. (Refer to 23 - BODY/SEATS/SEAT - FRONT - INSTALLATION)

SEAT BACK RECLINER - FRONT

REMOVAL

WARNING: TO AVOID PERSONAL INJURY OR DEATH, ON VEHICLES EQUIPPED WITH AIRBAGS, DISABLE THE SUPPLEMENTAL RESTRAINT SYSTEM BEFORE ATTEMPTING ANY STEERING WHEEL, STEERING COLUMN, AIRBAG, OCCUPANT CLASSIFICATION SYSTEM, SEAT BELT TENSIONER, IMPACT SENSOR, OR INSTRUMENT PANEL COMPONENT DIAGNOSIS OR SERVICE. DISCONNECT AND ISOLATE THE BATTERY NEGATIVE (GROUND) CABLE, THEN WAIT TWO MINUTES FOR THE SYSTEM CAPACITOR TO DISCHARGE BEFORE PERFORMING FURTHER DIAGNOSIS OR SERVICE. THIS IS THE ONLY SURE WAY TO DISABLE THE SUPPLEMENTAL RESTRAINT SYSTEM. FAILURE TO TAKE THE PROPER PRECAUTIONS COULD RESULT IN ACCIDENTAL AIRBAG DEPLOYMENT.

WARNING: TO AVOID PERSONAL INJURY OR DEATH ON VEHICLES EQUIPPED WITH THE OCCUPANT CLASSIFICATION SYSTEM (OCS), ONLY THE OCCUPANT CLASSIFICATION MODULE (OCM) AND THE SEAT CUSHION TRIM MAY BE SERVICED SEPARATELY. ALL OTHER COMPONENTS OF THE PASSENGER SIDE FRONT SEAT CUSHION ASSEMBLY MUST BE SERVICED ONLY AS A COMPLETE FACTORY-CALIBRATED, ASSEMBLED AND TAMPER-EVIDENT SERVICE REPLACEMENT PACKAGE. THIS PACKAGE INCLUDES THE FRAME, SPRINGS, PAD, BLADDER, SENSOR, FOAM, WIRING AND A CALIBRATED OCM. WHEN INSTALLING THIS PACKAGE ALWAYS REPLACE ALL OF THE EXISTING COMPONENTS WITH THE NEW COMPONENTS AS A UNIT. DO NOT ATTEMPT TO SEPARATE OR DISCONNECT ANY OF THE NEW OCS COMPONENTS IN THE SERVICE REPLACEMENT PACKAGE FROM EACH OTHER, AND DO NOT ATTEMPT TO REUSE ANY OF THE REPLACED COMPONENTS IN THIS OR ANY OTHER VEHICLE. FAILURE TO TAKE THE PROPER PRECAUTIONS COULD RESULT IN FAILURE OF THE PASSENGER AIRBAG TO DEPLOY WHEN REQUIRED, OR IN PASSENGER AIRBAG DEPLOYMENT WHEN NOT REQUIRED.

(1) Remove the seat back. (Refer to 23 - BODY/SEATS/SEAT BACK - FRONT - REMOVAL)
(2) Position the seat back cover out of the way and remove the bolts. (Fig. 4)
(3) Remove the recliners from the seat back frame.

SEAT BACK RECLINER - FRONT (Continued)

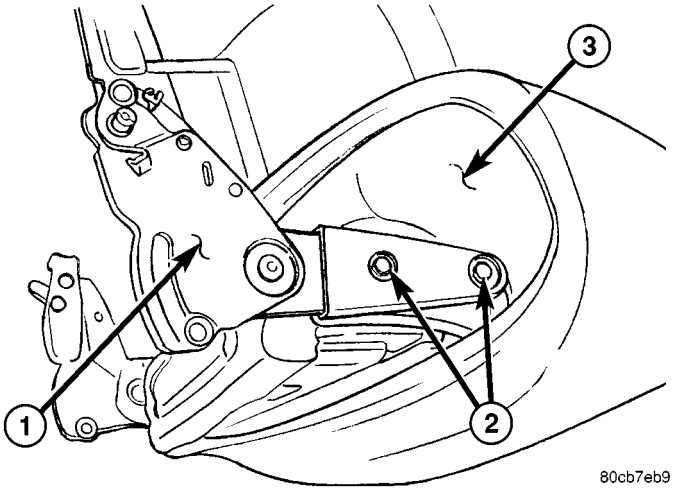

Fig. 4 SEAT BACK RECLINER

1 - SEAT BACK RECLINER
2 - BOLTS
3 - SEAT BACK

INSTALLATION

WARNING: TO AVOID PERSONAL INJURY OR DEATH, ON VEHICLES EQUIPPED WITH AIRBAGS, DISABLE THE SUPPLEMENTAL RESTRAINT SYSTEM BEFORE ATTEMPTING ANY STEERING WHEEL, STEERING COLUMN, AIRBAG, OCCUPANT CLASSIFICATION SYSTEM, SEAT BELT TENSIONER, IMPACT SENSOR, OR INSTRUMENT PANEL COMPONENT DIAGNOSIS OR SERVICE. DISCONNECT AND ISOLATE THE BATTERY NEGATIVE (GROUND) CABLE, THEN WAIT TWO MINUTES FOR THE SYSTEM CAPACITOR TO DISCHARGE BEFORE PERFORMING FURTHER DIAGNOSIS OR SERVICE. THIS IS THE ONLY SURE WAY TO DISABLE THE SUPPLEMENTAL RESTRAINT SYSTEM. FAILURE TO TAKE THE PROPER PRECAUTIONS COULD RESULT IN ACCIDENTAL AIRBAG DEPLOYMENT.

WARNING: TO AVOID PERSONAL INJURY OR DEATH ON VEHICLES EQUIPPED WITH THE OCCUPANT CLASSIFICATION SYSTEM (OCS), ONLY THE OCCUPANT CLASSIFICATION MODULE (OCM) AND THE SEAT CUSHION TRIM MAY BE SERVICED SEPARATELY. ALL OTHER COMPONENTS OF THE PASSENGER SIDE FRONT SEAT CUSHION ASSEMBLY MUST BE SERVICED ONLY AS A COMPLETE FACTORY-CALIBRATED, ASSEMBLED AND TAMPER-EVIDENT SERVICE REPLACEMENT PACKAGE. THIS PACKAGE INCLUDES THE FRAME, SPRINGS, PAD, BLADDER, SENSOR, FOAM, WIRING AND A CALIBRATED OCM. WHEN INSTALLING THIS PACKAGE ALWAYS REPLACE ALL OF THE EXISTING COMPONENTS WITH THE NEW COMPONENTS AS A UNIT. DO NOT ATTEMPT TO SEPARATE OR DISCONNECT ANY OF THE NEW OCS COMPONENTS IN THE SERVICE REPLACEMENT PACKAGE FROM EACH OTHER, AND DO NOT ATTEMPT TO REUSE ANY OF THE REPLACED COMPONENTS IN THIS OR ANY OTHER VEHICLE. FAILURE TO TAKE THE PROPER PRECAUTIONS COULD RESULT IN FAILURE OF THE PASSENGER AIRBAG TO DEPLOY WHEN REQUIRED, OR IN PASSENGER AIRBAG DEPLOYMENT WHEN NOT REQUIRED.

(1) Install the recliners onto the seat back.

(2) Position the seat back cover aside and install the recliner bolts.

(3) Tighten the bolts to 28 N·m (21 ft. lbs.).

(4) Install the seat back. (Refer to 23 - BODY/SEATS/SEAT BACK - FRONT - INSTALLATION)

SEAT BACK COVER - FRONT

REMOVAL

WARNING: TO AVOID PERSONAL INJURY OR DEATH, ON VEHICLES EQUIPPED WITH AIRBAGS, DISABLE THE SUPPLEMENTAL RESTRAINT SYSTEM BEFORE ATTEMPTING ANY STEERING WHEEL, STEERING COLUMN, AIRBAG, OCCUPANT CLASSIFICATION SYSTEM, SEAT BELT TENSIONER, IMPACT SENSOR, OR INSTRUMENT PANEL COMPONENT DIAGNOSIS OR SERVICE. DISCONNECT AND ISOLATE THE BATTERY NEGATIVE (GROUND) CABLE, THEN WAIT TWO MINUTES FOR THE SYSTEM CAPACITOR TO DISCHARGE BEFORE PERFORMING FURTHER DIAGNOSIS OR SERVICE. THIS IS THE ONLY SURE WAY TO DISABLE THE SUPPLEMENTAL RESTRAINT SYSTEM. FAILURE TO TAKE THE PROPER PRECAUTIONS COULD RESULT IN ACCIDENTAL AIRBAG DEPLOYMENT.

SEAT BACK COVER - FRONT (Continued)

WARNING: TO AVOID PERSONAL INJURY OR DEATH ON VEHICLES EQUIPPED WITH THE OCCUPANT CLASSIFICATION SYSTEM (OCS), ONLY THE OCCUPANT CLASSIFICATION MODULE (OCM) AND THE SEAT CUSHION TRIM MAY BE SERVICED SEPARATELY. ALL OTHER COMPONENTS OF THE PASSENGER SIDE FRONT SEAT CUSHION ASSEMBLY MUST BE SERVICED ONLY AS A COMPLETE FACTORY-CALIBRATED, ASSEMBLED AND TAMPER-EVIDENT SERVICE REPLACEMENT PACKAGE. THIS PACKAGE INCLUDES THE FRAME, SPRINGS, PAD, BLADDER, SENSOR, FOAM, WIRING AND A CALIBRATED OCM. WHEN INSTALLING THIS PACKAGE ALWAYS REPLACE ALL OF THE EXISTING COMPONENTS WITH THE NEW COMPONENTS AS A UNIT. DO NOT ATTEMPT TO SEPARATE OR DISCONNECT ANY OF THE NEW OCS COMPONENTS IN THE SERVICE REPLACEMENT PACKAGE FROM EACH OTHER, AND DO NOT ATTEMPT TO REUSE ANY OF THE REPLACED COMPONENTS IN THIS OR ANY OTHER VEHICLE. FAILURE TO TAKE THE PROPER PRECAUTIONS COULD RESULT IN FAILURE OF THE PASSENGER AIRBAG TO DEPLOY WHEN REQUIRED, OR IN PASSENGER AIRBAG DEPLOYMENT WHEN NOT REQUIRED.

(1) Remove the seat back. (Refer to 23 - BODY/SEATS/SEAT BACK - FRONT - REMOVAL)
(2) Remove the head rest and remove the trim caps. (Refer to 23 - BODY/SEATS/HEADREST - REMOVAL)
(3) Disconnect the j-straps.
(4) Remove the two lower hog rings.
(5) Partially remove the seat back cover and remove the two upper hog rings.
(6) Remove the seat back cover.

INSTALLATION

WARNING: TO AVOID PERSONAL INJURY OR DEATH, ON VEHICLES EQUIPPED WITH AIRBAGS, DISABLE THE SUPPLEMENTAL RESTRAINT SYSTEM BEFORE ATTEMPTING ANY STEERING WHEEL, STEERING COLUMN, AIRBAG, OCCUPANT CLASSIFICATION SYSTEM, SEAT BELT TENSIONER, IMPACT SENSOR, OR INSTRUMENT PANEL COMPONENT DIAGNOSIS OR SERVICE. DISCONNECT AND ISOLATE THE BATTERY NEGATIVE (GROUND) CABLE, THEN WAIT TWO MINUTES FOR THE SYSTEM CAPACITOR TO DISCHARGE BEFORE PERFORMING FURTHER DIAGNOSIS OR SERVICE. THIS IS THE ONLY SURE WAY TO DISABLE THE SUPPLEMENTAL RESTRAINT SYSTEM. FAILURE TO TAKE THE PROPER PRECAUTIONS COULD RESULT IN ACCIDENTAL AIRBAG DEPLOYMENT.

WARNING: TO AVOID PERSONAL INJURY OR DEATH ON VEHICLES EQUIPPED WITH THE OCCUPANT CLASSIFICATION SYSTEM (OCS), ONLY THE OCCUPANT CLASSIFICATION MODULE (OCM) AND THE SEAT CUSHION TRIM MAY BE SERVICED SEPARATELY. ALL OTHER COMPONENTS OF THE PASSENGER SIDE FRONT SEAT CUSHION ASSEMBLY MUST BE SERVICED ONLY AS A COMPLETE FACTORY-CALIBRATED, ASSEMBLED AND TAMPER-EVIDENT SERVICE REPLACEMENT PACKAGE. THIS PACKAGE INCLUDES THE FRAME, SPRINGS, PAD, BLADDER, SENSOR, FOAM, WIRING AND A CALIBRATED OCM. WHEN INSTALLING THIS PACKAGE ALWAYS REPLACE ALL OF THE EXISTING COMPONENTS WITH THE NEW COMPONENTS AS A UNIT. DO NOT ATTEMPT TO SEPARATE OR DISCONNECT ANY OF THE NEW OCS COMPONENTS IN THE SERVICE REPLACEMENT PACKAGE FROM EACH OTHER, AND DO NOT ATTEMPT TO REUSE ANY OF THE REPLACED COMPONENTS IN THIS OR ANY OTHER VEHICLE. FAILURE TO TAKE THE PROPER PRECAUTIONS COULD RESULT IN FAILURE OF THE PASSENGER AIRBAG TO DEPLOY WHEN REQUIRED, OR IN PASSENGER AIRBAG DEPLOYMENT WHEN NOT REQUIRED.

(1) Partially install the seat back cover and replace the two top hog rings.
(2) Pull cover down and replace the two lower hog rings.
(3) Connect the j-straps.
(4) Install trim caps and the head rest. (Refer to 23 - BODY/SEATS/HEADREST - INSTALLATION)
(5) Install the seat back. (Refer to 23 - BODY/SEATS/SEAT BACK - FRONT - INSTALLATION)

SEAT BACK CUSHION - FRONT

REMOVAL

WARNING: TO AVOID PERSONAL INJURY OR DEATH, ON VEHICLES EQUIPPED WITH AIRBAGS, DISABLE THE SUPPLEMENTAL RESTRAINT SYSTEM BEFORE ATTEMPTING ANY STEERING WHEEL, STEERING COLUMN, AIRBAG, OCCUPANT CLASSIFICATION SYSTEM, SEAT BELT TENSIONER, IMPACT SENSOR, OR INSTRUMENT PANEL COMPONENT DIAGNOSIS OR SERVICE. DISCONNECT AND ISOLATE THE BATTERY NEGATIVE (GROUND) CABLE, THEN WAIT TWO MINUTES FOR THE SYSTEM CAPACITOR TO DISCHARGE BEFORE PERFORMING FURTHER DIAGNOSIS OR SERVICE. THIS IS THE ONLY SURE WAY TO DISABLE THE SUPPLEMENTAL RESTRAINT SYSTEM. FAILURE TO TAKE THE PROPER PRECAUTIONS COULD RESULT IN ACCIDENTAL AIRBAG DEPLOYMENT.

WARNING: TO AVOID PERSONAL INJURY OR DEATH ON VEHICLES EQUIPPED WITH THE OCCUPANT CLASSIFICATION SYSTEM (OCS), ONLY THE OCCUPANT CLASSIFICATION MODULE (OCM) AND THE SEAT CUSHION TRIM MAY BE SERVICED SEPARATELY. ALL OTHER COMPONENTS OF THE PASSENGER SIDE FRONT SEAT CUSHION ASSEMBLY MUST BE SERVICED ONLY AS A COMPLETE FACTORY-CALIBRATED, ASSEMBLED AND TAMPER-EVIDENT SERVICE REPLACEMENT PACKAGE. THIS PACKAGE INCLUDES THE FRAME, SPRINGS, PAD, BLADDER, SENSOR, FOAM, WIRING AND A CALIBRATED OCM. WHEN INSTALLING THIS PACKAGE ALWAYS REPLACE ALL OF THE EXISTING COMPONENTS WITH THE NEW COMPONENTS AS A UNIT. DO NOT ATTEMPT TO SEPARATE OR DISCONNECT ANY OF THE NEW OCS COMPONENTS IN THE SERVICE REPLACEMENT PACKAGE FROM EACH OTHER, AND DO NOT ATTEMPT TO REUSE ANY OF THE REPLACED COMPONENTS IN THIS OR ANY OTHER VEHICLE. FAILURE TO TAKE THE PROPER PRECAUTIONS COULD RESULT IN FAILURE OF THE PASSENGER AIRBAG TO DEPLOY WHEN REQUIRED, OR IN PASSENGER AIRBAG DEPLOYMENT WHEN NOT REQUIRED.

(1) Remove the seat back cover. (Refer to 23 - BODY/SEATS/SEAT BACK COVER - FRONT - REMOVAL)

(2) Separate the cushion from the seat back frame.

INSTALLATION

WARNING: TO AVOID PERSONAL INJURY OR DEATH, ON VEHICLES EQUIPPED WITH AIRBAGS, DISABLE THE SUPPLEMENTAL RESTRAINT SYSTEM BEFORE ATTEMPTING ANY STEERING WHEEL, STEERING COLUMN, AIRBAG, OCCUPANT CLASSIFICATION SYSTEM, SEAT BELT TENSIONER, IMPACT SENSOR, OR INSTRUMENT PANEL COMPONENT DIAGNOSIS OR SERVICE. DISCONNECT AND ISOLATE THE BATTERY NEGATIVE (GROUND) CABLE, THEN WAIT TWO MINUTES FOR THE SYSTEM CAPACITOR TO DISCHARGE BEFORE PERFORMING FURTHER DIAGNOSIS OR SERVICE. THIS IS THE ONLY SURE WAY TO DISABLE THE SUPPLEMENTAL RESTRAINT SYSTEM. FAILURE TO TAKE THE PROPER PRECAUTIONS COULD RESULT IN ACCIDENTAL AIRBAG DEPLOYMENT.

WARNING: TO AVOID PERSONAL INJURY OR DEATH ON VEHICLES EQUIPPED WITH THE OCCUPANT CLASSIFICATION SYSTEM (OCS), ONLY THE OCCUPANT CLASSIFICATION MODULE (OCM) AND THE SEAT CUSHION TRIM MAY BE SERVICED SEPARATELY. ALL OTHER COMPONENTS OF THE PASSENGER SIDE FRONT SEAT CUSHION ASSEMBLY MUST BE SERVICED ONLY AS A COMPLETE FACTORY-CALIBRATED, ASSEMBLED AND TAMPER-EVIDENT SERVICE REPLACEMENT PACKAGE. THIS PACKAGE INCLUDES THE FRAME, SPRINGS, PAD, BLADDER, SENSOR, FOAM, WIRING AND A CALIBRATED OCM. WHEN INSTALLING THIS PACKAGE ALWAYS REPLACE ALL OF THE EXISTING COMPONENTS WITH THE NEW COMPONENTS AS A UNIT. DO NOT ATTEMPT TO SEPARATE OR DISCONNECT ANY OF THE NEW OCS COMPONENTS IN THE SERVICE REPLACEMENT PACKAGE FROM EACH OTHER, AND DO NOT ATTEMPT TO REUSE ANY OF THE REPLACED COMPONENTS IN THIS OR ANY OTHER VEHICLE. FAILURE TO TAKE THE PROPER PRECAUTIONS COULD RESULT IN FAILURE OF THE PASSENGER AIRBAG TO DEPLOY WHEN REQUIRED, OR IN PASSENGER AIRBAG DEPLOYMENT WHEN NOT REQUIRED.

(1) Position the cushion onto the seat back frame.

(2) Install the seat back cover. (Refer to 23 - BODY/SEATS/SEAT BACK COVER - FRONT - INSTALLATION)

SEAT CUSHION - FRONT

REMOVAL

A non-calibrated Occupant Classification Module (OCM) is the only component of the Occupant Classification System (OCS) that is available for separate service replacement, as outlined in the procedures that follow. The OCS components of the passenger side front seat cushion including the cushion frame, springs, pad, occupant detection bladder, pressure sensor, seat cushion foam and the OCM are a factory-calibrated and assembled unit. Once this unit is connected to a vehicle electrically, the calibration settings are uploaded from the OCM and stored in the memory of the Airbag Control Module (ACM). If only the OCM is subsequently replaced, the new, non-calibrated OCM learns the proper calibration settings from the ACM after it is connected to the vehicle electrically.

If any of the remaining OCS components of the passenger side front seat cushion require replacement, they are serviced only as a factory-calibrated, assembled, and tamper-evident service replacement package. This package includes the assembled frame, springs, pad, bladder, sensor, foam, wiring and a calibrated OCM. When installing this package, always replace all of the existing components with the new components as a unit. Do not attempt to separate or disconnect any of the new OCS components contained in the service replacement package from each other, and do not attempt to reuse any of the replaced components in this or any other vehicle.

Once any of the original factory-installed components except the OCM have been replaced with the service replacement package components, the OCM can only be serviced by replacing the entire passenger side front seat cushion unit with another complete service replacement package.

WARNING: TO AVOID PERSONAL INJURY OR DEATH, ON VEHICLES EQUIPPED WITH AIRBAGS, DISABLE THE SUPPLEMENTAL RESTRAINT SYSTEM BEFORE ATTEMPTING ANY STEERING WHEEL, STEERING COLUMN, AIRBAG, OCCUPANT CLASSIFICATION SYSTEM, SEAT BELT TENSIONER, IMPACT SENSOR, OR INSTRUMENT PANEL COMPONENT DIAGNOSIS OR SERVICE. DISCONNECT AND ISOLATE THE BATTERY NEGATIVE (GROUND) CABLE, THEN WAIT TWO MINUTES FOR THE SYSTEM CAPACITOR TO DISCHARGE BEFORE PERFORMING FURTHER DIAGNOSIS OR SERVICE. THIS IS THE ONLY SURE WAY TO DISABLE THE SUPPLEMENTAL RESTRAINT SYSTEM. FAILURE TO TAKE THE PROPER PRECAUTIONS COULD RESULT IN ACCIDENTAL AIRBAG DEPLOYMENT.

WARNING: TO AVOID PERSONAL INJURY OR DEATH ON VEHICLES EQUIPPED WITH THE OCCUPANT CLASSIFICATION SYSTEM (OCS), ONLY THE OCCUPANT CLASSIFICATION MODULE (OCM) AND THE SEAT CUSHION TRIM MAY BE SERVICED SEPARATELY. ALL OTHER COMPONENTS OF THE PASSENGER SIDE FRONT SEAT CUSHION ASSEMBLY MUST BE SERVICED ONLY AS A COMPLETE FACTORY-CALIBRATED, ASSEMBLED AND TAMPER-EVIDENT SERVICE REPLACEMENT PACKAGE. THIS PACKAGE INCLUDES THE FRAME, SPRINGS, PAD, BLADDER, SENSOR, FOAM, WIRING AND A CALIBRATED OCM. WHEN INSTALLING THIS PACKAGE ALWAYS REPLACE ALL OF THE EXISTING COMPONENTS WITH THE NEW COMPONENTS AS A UNIT. DO NOT ATTEMPT TO SEPARATE OR DISCONNECT ANY OF THE NEW OCS COMPONENTS IN THE SERVICE REPLACEMENT PACKAGE FROM EACH OTHER, AND DO NOT ATTEMPT TO REUSE ANY OF THE REPLACED COMPONENTS IN THIS OR ANY OTHER VEHICLE. FAILURE TO TAKE THE PROPER PRECAUTIONS COULD RESULT IN FAILURE OF THE PASSENGER AIRBAG TO DEPLOY WHEN REQUIRED, OR IN PASSENGER AIRBAG DEPLOYMENT WHEN NOT REQUIRED.

(1) Remove the seat. (Refer to 23 - BODY/SEATS/SEAT - FRONT - REMOVAL)

(2) Remove the trim covers from each side.

(3) Remove the screws and disconnect the recliner cable to the seat back hinges.

(4) Remove the two bolts attaching the front of the cushion frame to the seat frame. (Fig. 5)

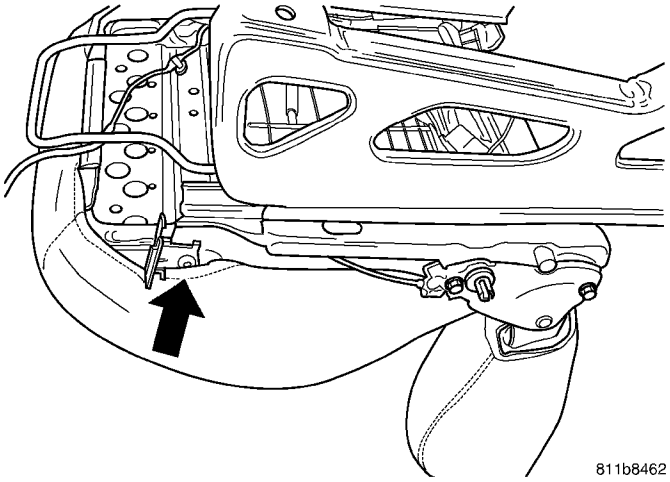

Fig. 5 FRONT CUSHION BOLTS

(5) Remove the two bolts attaching the rear of the cushion frame to the seat frame. (Fig. 6)

(6) Separate the seat cushion assembly from the seat assembly.

SEAT CUSHION - FRONT (Continued)

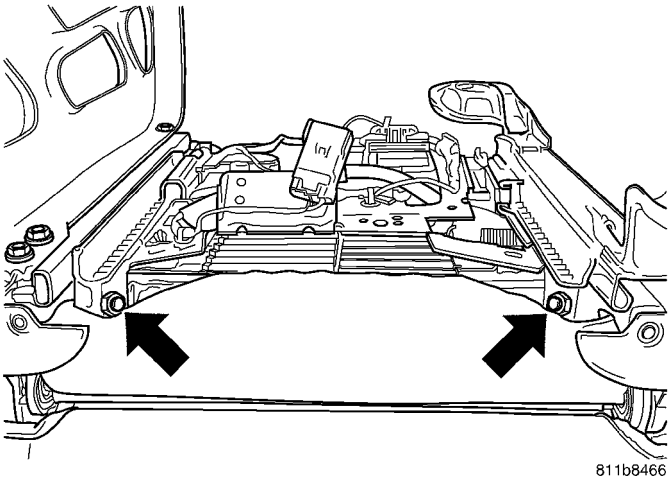

Fig. 6 REAR CUSHION BOLTS

(7) Separate the j-straps and remove the seat cushion and cover from the frame. (Fig. 7)

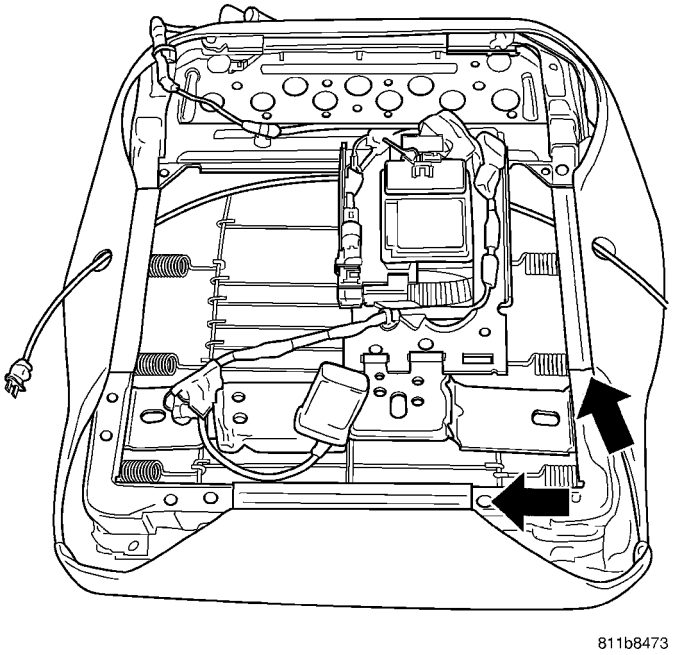

Fig. 7 CUSHION COVER

(8) Remove the hog rings and remove the seat cushion cover. (Fig. 8)

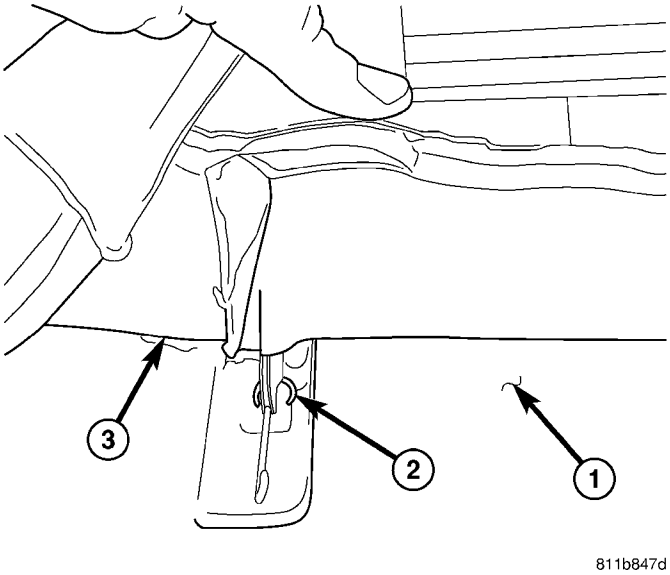

Fig. 8 CUSHION COVER - HOG RINGS

1 - SEAT FOAM CUSHION
2 - HOG RINGS
3 - SEAT CUSHION COVER

INSTALLATION

A non-calibrated Occupant Classification Module (OCM) is the only component of the Occupant Classification System (OCS) that is available for separate service replacement, as outlined in the procedures that follow. The OCS components of the passenger side front seat cushion including the cushion frame, springs, pad, occupant detection bladder, pressure sensor, seat cushion foam and the OCM are a factory-calibrated and assembled unit. Once this unit is connected to a vehicle electrically, the calibration settings are uploaded from the OCM and stored in the memory of the Airbag Control Module (ACM). If only the OCM is subsequently replaced, the new, non-calibrated OCM learns the proper calibration settings from the ACM after it is connected to the vehicle electrically.

If any of the remaining OCS components of the passenger side front seat cushion require replacement, they are serviced only as a factory-calibrated, assembled, and tamper-evident service replacement package. This package includes the assembled frame, springs, pad, bladder, sensor, foam, wiring and a calibrated OCM. When installing this package, always replace all of the existing components with the new components as a unit. Do not attempt to separate or disconnect any of the new OCS components contained in the service replacement package from each other, and do not attempt to reuse any of the replaced components in this or any other vehicle.

Once any of the original factory-installed components except the OCM have been replaced with the service replacement package components, the OCM can only be serviced by replacing the entire passenger side front seat cushion unit with another complete service replacement package.

SEAT CUSHION - FRONT (Continued)

WARNING: TO AVOID PERSONAL INJURY OR DEATH, ON VEHICLES EQUIPPED WITH AIRBAGS, DISABLE THE SUPPLEMENTAL RESTRAINT SYSTEM BEFORE ATTEMPTING ANY STEERING WHEEL, STEERING COLUMN, AIRBAG, OCCUPANT CLASSIFICATION SYSTEM, SEAT BELT TENSIONER, IMPACT SENSOR, OR INSTRUMENT PANEL COMPONENT DIAGNOSIS OR SERVICE. DISCONNECT AND ISOLATE THE BATTERY NEGATIVE (GROUND) CABLE, THEN WAIT TWO MINUTES FOR THE SYSTEM CAPACITOR TO DISCHARGE BEFORE PERFORMING FURTHER DIAGNOSIS OR SERVICE. THIS IS THE ONLY SURE WAY TO DISABLE THE SUPPLEMENTAL RESTRAINT SYSTEM. FAILURE TO TAKE THE PROPER PRECAUTIONS COULD RESULT IN ACCIDENTAL AIRBAG DEPLOYMENT.

WARNING: TO AVOID PERSONAL INJURY OR DEATH ON VEHICLES EQUIPPED WITH THE OCCUPANT CLASSIFICATION SYSTEM (OCS), ONLY THE OCCUPANT CLASSIFICATION MODULE (OCM) AND THE SEAT CUSHION TRIM MAY BE SERVICED SEPARATELY. ALL OTHER COMPONENTS OF THE PASSENGER SIDE FRONT SEAT CUSHION ASSEMBLY MUST BE SERVICED ONLY AS A COMPLETE FACTORY-CALIBRATED, ASSEMBLED AND TAMPER-EVIDENT SERVICE REPLACEMENT PACKAGE. THIS PACKAGE INCLUDES THE FRAME, SPRINGS, PAD, BLADDER, SENSOR, FOAM, WIRING AND A CALIBRATED OCM. WHEN INSTALLING THIS PACKAGE ALWAYS REPLACE ALL OF THE EXISTING COMPONENTS WITH THE NEW COMPONENTS AS A UNIT. DO NOT ATTEMPT TO SEPARATE OR DISCONNECT ANY OF THE NEW OCS COMPONENTS IN THE SERVICE REPLACEMENT PACKAGE FROM EACH OTHER, AND DO NOT ATTEMPT TO REUSE ANY OF THE REPLACED COMPONENTS IN THIS OR ANY OTHER VEHICLE. FAILURE TO TAKE THE PROPER PRECAUTIONS COULD RESULT IN FAILURE OF THE PASSENGER AIRBAG TO DEPLOY WHEN REQUIRED, OR IN PASSENGER AIRBAG DEPLOYMENT WHEN NOT REQUIRED.

(1) Position the seat cushion cover over the seat foam cushion and install new hog rings.

(2) Position the seat cushion onto the seat cushion frame and attach the j-straps.

(3) Install the seat cushion onto the seat assembly and install the rear two bolts.

(4) Install the front two bolts and tighten the bolts to 28 N·m (21 ft. lbs.).

(5) Connect the recliner cables to the seat back hinges and install the screws.

(6) Install the trim covers.

(7) Install the seat. (Refer to 23 - BODY/SEATS/SEAT - INSTALLATION)

SEAT CUSHION COVER - FRONT

REMOVAL

A non-calibrated Occupant Classification Module (OCM) is the only component of the Occupant Classification System (OCS) that is available for separate service replacement, as outlined in the procedures that follow. The OCS components of the passenger side front seat cushion including the cushion frame, springs, pad, occupant detection bladder, pressure sensor, seat cushion foam and the OCM are a factory-calibrated and assembled unit. Once this unit is connected to a vehicle electrically, the calibration settings are uploaded from the OCM and stored in the memory of the Airbag Control Module (ACM). If only the OCM is subsequently replaced, the new, non-calibrated OCM learns the proper calibration settings from the ACM after it is connected to the vehicle electrically.

If any of the remaining OCS components of the passenger side front seat cushion require replacement, they are serviced only as a factory-calibrated, assembled, and tamper-evident service replacement package. This package includes the assembled frame, springs, pad, bladder, sensor, foam, wiring and a calibrated OCM. When installing this package, always replace all of the existing components with the new components as a unit. Do not attempt to separate or disconnect any of the new OCS components contained in the service replacement package from each other, and do not attempt to reuse any of the replaced components in this or any other vehicle.

Once any of the original factory-installed components except the OCM have been replaced with the service replacement package components, the OCM can only be serviced by replacing the entire passenger side front seat cushion unit with another complete service replacement package. (Refer to 23 - BODY/SEATS/SEAT CUSHION - FRONT - REMOVAL).

SEAT CUSHION COVER - FRONT (Continued)

WARNING: TO AVOID PERSONAL INJURY OR DEATH, ON VEHICLES EQUIPPED WITH AIRBAGS, DISABLE THE SUPPLEMENTAL RESTRAINT SYSTEM BEFORE ATTEMPTING ANY STEERING WHEEL, STEERING COLUMN, AIRBAG, OCCUPANT CLASSIFICATION SYSTEM, SEAT BELT TENSIONER, IMPACT SENSOR, OR INSTRUMENT PANEL COMPONENT DIAGNOSIS OR SERVICE. DISCONNECT AND ISOLATE THE BATTERY NEGATIVE (GROUND) CABLE, THEN WAIT TWO MINUTES FOR THE SYSTEM CAPACITOR TO DISCHARGE BEFORE PERFORMING FURTHER DIAGNOSIS OR SERVICE. THIS IS THE ONLY SURE WAY TO DISABLE THE SUPPLEMENTAL RESTRAINT SYSTEM. FAILURE TO TAKE THE PROPER PRECAUTIONS COULD RESULT IN ACCIDENTAL AIRBAG DEPLOYMENT.

WARNING: TO AVOID PERSONAL INJURY OR DEATH ON VEHICLES EQUIPPED WITH THE OCCUPANT CLASSIFICATION SYSTEM (OCS), ONLY THE OCCUPANT CLASSIFICATION MODULE (OCM) AND THE SEAT CUSHION TRIM MAY BE SERVICED SEPARATELY. ALL OTHER COMPONENTS OF THE PASSENGER SIDE FRONT SEAT CUSHION ASSEMBLY MUST BE SERVICED ONLY AS A COMPLETE FACTORY-CALIBRATED, ASSEMBLED AND TAMPER-EVIDENT SERVICE REPLACEMENT PACKAGE. THIS PACKAGE INCLUDES THE FRAME, SPRINGS, PAD, BLADDER, SENSOR, FOAM, WIRING AND A CALIBRATED OCM. WHEN INSTALLING THIS PACKAGE ALWAYS REPLACE ALL OF THE EXISTING COMPONENTS WITH THE NEW COMPONENTS AS A UNIT. DO NOT ATTEMPT TO SEPARATE OR DISCONNECT ANY OF THE NEW OCS COMPONENTS IN THE SERVICE REPLACEMENT PACKAGE FROM EACH OTHER, AND DO NOT ATTEMPT TO REUSE ANY OF THE REPLACED COMPONENTS IN THIS OR ANY OTHER VEHICLE. FAILURE TO TAKE THE PROPER PRECAUTIONS COULD RESULT IN FAILURE OF THE PASSENGER AIRBAG TO DEPLOY WHEN REQUIRED, OR IN PASSENGER AIRBAG DEPLOYMENT WHEN NOT REQUIRED.

(1) Remove the seat cushion. (Refer to 23 - BODY/SEATS/SEAT CUSHION - FRONT - REMOVAL)

(2) Disconnect the j-straps.

(3) Remove the hog rings and remove the cushion cover. (Fig. 9)

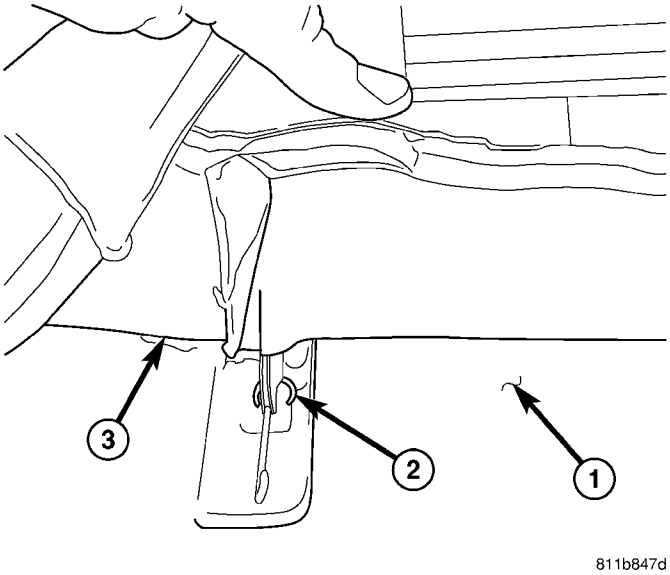

Fig. 9 CUSHION COVER - HOG RINGS

1 - SEAT FOAM CUSHION
2 - HOG RINGS
3 - SEAT CUSHION COVER

INSTALLATION

A non-calibrated Occupant Classification Module (OCM) is the only component of the Occupant Classification System (OCS) that is available for separate service replacement, as outlined in the procedures that follow. The OCS components of the passenger side front seat cushion including the cushion frame, springs, pad, occupant detection bladder, pressure sensor, seat cushion foam and the OCM are a factory-calibrated and assembled unit. Once this unit is connected to a vehicle electrically, the calibration settings are uploaded from the OCM and stored in the memory of the Airbag Control Module (ACM). If only the OCM is subsequently replaced, the new, non-calibrated OCM learns the proper calibration settings from the ACM after it is connected to the vehicle electrically.

If any of the remaining OCS components of the passenger side front seat cushion require replacement, they are serviced only as a factory-calibrated, assembled, and tamper-evident service replacement package. This package includes the assembled frame, springs, pad, bladder, sensor, foam, wiring and a calibrated OCM. When installing this package, always replace all of the existing components with the new components as a unit. Do not attempt to separate or disconnect any of the new OCS components contained in the service replacement package from each other, and do not attempt to reuse any of the replaced components in this or any other vehicle.

Once any of the original factory-installed components except the OCM have been replaced with the service replacement package components, the OCM can only be serviced by replacing the entire passenger side front seat cushion unit with another complete service replacement package. (Refer to 23 - BODY/SEATS/SEAT CUSHION - FRONT - REMOVAL).

SEAT CUSHION COVER - FRONT (Continued)

WARNING: TO AVOID PERSONAL INJURY OR DEATH, ON VEHICLES EQUIPPED WITH AIRBAGS, DISABLE THE SUPPLEMENTAL RESTRAINT SYSTEM BEFORE ATTEMPTING ANY STEERING WHEEL, STEERING COLUMN, AIRBAG, OCCUPANT CLASSIFICATION SYSTEM, SEAT BELT TENSIONER, IMPACT SENSOR, OR INSTRUMENT PANEL COMPONENT DIAGNOSIS OR SERVICE. DISCONNECT AND ISOLATE THE BATTERY NEGATIVE (GROUND) CABLE, THEN WAIT TWO MINUTES FOR THE SYSTEM CAPACITOR TO DISCHARGE BEFORE PERFORMING FURTHER DIAGNOSIS OR SERVICE. THIS IS THE ONLY SURE WAY TO DISABLE THE SUPPLEMENTAL RESTRAINT SYSTEM. FAILURE TO TAKE THE PROPER PRECAUTIONS COULD RESULT IN ACCIDENTAL AIRBAG DEPLOYMENT.

WARNING: TO AVOID PERSONAL INJURY OR DEATH ON VEHICLES EQUIPPED WITH THE OCCUPANT CLASSIFICATION SYSTEM (OCS), ONLY THE OCCUPANT CLASSIFICATION MODULE (OCM) AND THE SEAT CUSHION TRIM MAY BE SERVICED SEPARATELY. ALL OTHER COMPONENTS OF THE PASSENGER SIDE FRONT SEAT CUSHION ASSEMBLY MUST BE SERVICED ONLY AS A COMPLETE FACTORY-CALIBRATED, ASSEMBLED AND TAMPER-EVIDENT SERVICE REPLACEMENT PACKAGE. THIS PACKAGE INCLUDES THE FRAME, SPRINGS, PAD, BLADDER, SENSOR, FOAM, WIRING AND A CALIBRATED OCM. WHEN INSTALLING THIS PACKAGE ALWAYS REPLACE ALL OF THE EXISTING COMPONENTS WITH THE NEW COMPONENTS AS A UNIT. DO NOT ATTEMPT TO SEPARATE OR DISCONNECT ANY OF THE NEW OCS COMPONENTS IN THE SERVICE REPLACEMENT PACKAGE FROM EACH OTHER, AND DO NOT ATTEMPT TO REUSE ANY OF THE REPLACED COMPONENTS IN THIS OR ANY OTHER VEHICLE. FAILURE TO TAKE THE PROPER PRECAUTIONS COULD RESULT IN FAILURE OF THE PASSENGER AIRBAG TO DEPLOY WHEN REQUIRED, OR IN PASSENGER AIRBAG DEPLOYMENT WHEN NOT REQUIRED.

(1) Position the seat cushion cover and install new hog rings.

(2) Connect the j-straps.

(3) Install the seat cushion. (Refer to 23 - BODY/SEATS/SEAT CUSHION - FRONT - INSTALLATION)

MANUAL SEAT RISER

REMOVAL

WARNING: TO AVOID PERSONAL INJURY OR DEATH, ON VEHICLES EQUIPPED WITH AIRBAGS, DISABLE THE SUPPLEMENTAL RESTRAINT SYSTEM BEFORE ATTEMPTING ANY STEERING WHEEL, STEERING COLUMN, AIRBAG, OCCUPANT CLASSIFICATION SYSTEM, SEAT BELT TENSIONER, IMPACT SENSOR, OR INSTRUMENT PANEL COMPONENT DIAGNOSIS OR SERVICE. DISCONNECT AND ISOLATE THE BATTERY NEGATIVE (GROUND) CABLE, THEN WAIT TWO MINUTES FOR THE SYSTEM CAPACITOR TO DISCHARGE BEFORE PERFORMING FURTHER DIAGNOSIS OR SERVICE. THIS IS THE ONLY SURE WAY TO DISABLE THE SUPPLEMENTAL RESTRAINT SYSTEM. FAILURE TO TAKE THE PROPER PRECAUTIONS COULD RESULT IN ACCIDENTAL AIRBAG DEPLOYMENT.

WARNING: TO AVOID PERSONAL INJURY OR DEATH ON VEHICLES EQUIPPED WITH THE OCCUPANT CLASSIFICATION SYSTEM (OCS), ONLY THE OCCUPANT CLASSIFICATION MODULE (OCM) AND THE SEAT CUSHION TRIM MAY BE SERVICED SEPARATELY. ALL OTHER COMPONENTS OF THE PASSENGER SIDE FRONT SEAT CUSHION ASSEMBLY MUST BE SERVICED ONLY AS A COMPLETE FACTORY-CALIBRATED, ASSEMBLED AND TAMPER-EVIDENT SERVICE REPLACEMENT PACKAGE. THIS PACKAGE INCLUDES THE FRAME, SPRINGS, PAD, BLADDER, SENSOR, FOAM, WIRING AND A CALIBRATED OCM. WHEN INSTALLING THIS PACKAGE ALWAYS REPLACE ALL OF THE EXISTING COMPONENTS WITH THE NEW COMPONENTS AS A UNIT. DO NOT ATTEMPT TO SEPARATE OR DISCONNECT ANY OF THE NEW OCS COMPONENTS IN THE SERVICE REPLACEMENT PACKAGE FROM EACH OTHER, AND DO NOT ATTEMPT TO REUSE ANY OF THE REPLACED COMPONENTS IN THIS OR ANY OTHER VEHICLE. FAILURE TO TAKE THE PROPER PRECAUTIONS COULD RESULT IN FAILURE OF THE PASSENGER AIRBAG TO DEPLOY WHEN REQUIRED, OR IN PASSENGER AIRBAG DEPLOYMENT WHEN NOT REQUIRED.

(1) Remove the seat. (Refer to 23 - BODY/SEATS/SEAT - FRONT - REMOVAL)

(2) Remove the bolts and remove the rivet from the release handle. (Fig. 10)

(3) Remove the riser.

MANUAL SEAT RISER (Continued)

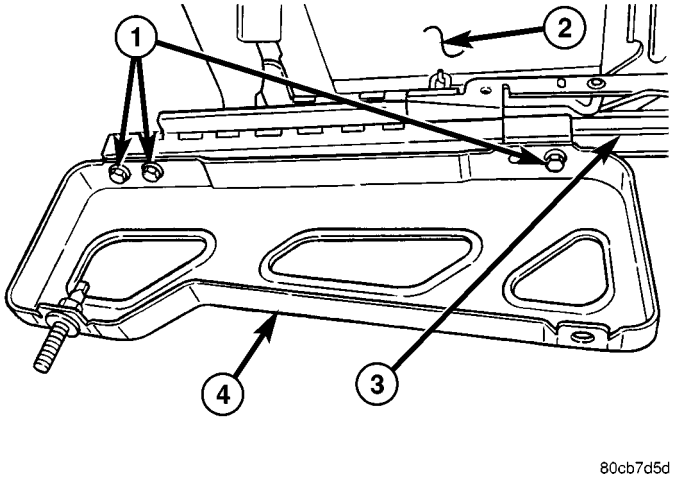

Fig. 10 FRONT SEAT RISER

1 - BOLTS (3)
2 - SEAT CUSHION
3 - SEAT TRACK
4 - SEAT RISER

INSTALLATION

WARNING: TO AVOID PERSONAL INJURY OR DEATH, ON VEHICLES EQUIPPED WITH AIRBAGS, DISABLE THE SUPPLEMENTAL RESTRAINT SYSTEM BEFORE ATTEMPTING ANY STEERING WHEEL, STEERING COLUMN, AIRBAG, OCCUPANT CLASSIFICATION SYSTEM, SEAT BELT TENSIONER, IMPACT SENSOR, OR INSTRUMENT PANEL COMPONENT DIAGNOSIS OR SERVICE. DISCONNECT AND ISOLATE THE BATTERY NEGATIVE (GROUND) CABLE, THEN WAIT TWO MINUTES FOR THE SYSTEM CAPACITOR TO DISCHARGE BEFORE PERFORMING FURTHER DIAGNOSIS OR SERVICE. THIS IS THE ONLY SURE WAY TO DISABLE THE SUPPLEMENTAL RESTRAINT SYSTEM. FAILURE TO TAKE THE PROPER PRECAUTIONS COULD RESULT IN ACCIDENTAL AIRBAG DEPLOYMENT.

WARNING: TO AVOID PERSONAL INJURY OR DEATH ON VEHICLES EQUIPPED WITH THE OCCUPANT CLASSIFICATION SYSTEM (OCS), ONLY THE OCCUPANT CLASSIFICATION MODULE (OCM) AND THE SEAT CUSHION TRIM MAY BE SERVICED SEPARATELY. ALL OTHER COMPONENTS OF THE PASSENGER SIDE FRONT SEAT CUSHION ASSEMBLY MUST BE SERVICED ONLY AS A COMPLETE FACTORY-CALIBRATED, ASSEMBLED AND TAMPER-EVIDENT SERVICE REPLACEMENT PACKAGE. THIS PACKAGE INCLUDES THE FRAME, SPRINGS, PAD, BLADDER, SENSOR, FOAM, WIRING AND A CALIBRATED OCM. WHEN INSTALLING THIS PACKAGE ALWAYS REPLACE ALL OF THE EXISTING COMPONENTS WITH THE NEW COMPONENTS AS A UNIT. DO NOT ATTEMPT TO SEPARATE OR DISCONNECT ANY OF THE NEW OCS COMPONENTS IN THE SERVICE REPLACEMENT PACKAGE FROM EACH OTHER, AND DO NOT ATTEMPT TO REUSE ANY OF THE REPLACED COMPONENTS IN THIS OR ANY OTHER VEHICLE. FAILURE TO TAKE THE PROPER PRECAUTIONS COULD RESULT IN FAILURE OF THE PASSENGER AIRBAG TO DEPLOY WHEN REQUIRED, OR IN PASSENGER AIRBAG DEPLOYMENT WHEN NOT REQUIRED.

(1) Install the seat riser and install the bolts.
(2) Tighten the bolts to 28 N·m (21 ft. lbs.).
(3) Install a new release handle rivet.
(4) Install the seat. (Refer to 23 - BODY/SEATS/SEAT - FRONT - INSTALLATION)

SEAT TRACK

REMOVAL

WARNING: TO AVOID PERSONAL INJURY OR DEATH, ON VEHICLES EQUIPPED WITH AIRBAGS, DISABLE THE SUPPLEMENTAL RESTRAINT SYSTEM BEFORE ATTEMPTING ANY STEERING WHEEL, STEERING COLUMN, AIRBAG, OCCUPANT CLASSIFICATION SYSTEM, SEAT BELT TENSIONER, IMPACT SENSOR, OR INSTRUMENT PANEL COMPONENT DIAGNOSIS OR SERVICE. DISCONNECT AND ISOLATE THE BATTERY NEGATIVE (GROUND) CABLE, THEN WAIT TWO MINUTES FOR THE SYSTEM CAPACITOR TO DISCHARGE BEFORE PERFORMING FURTHER DIAGNOSIS OR SERVICE. THIS IS THE ONLY SURE WAY TO DISABLE THE SUPPLEMENTAL RESTRAINT SYSTEM. FAILURE TO TAKE THE PROPER PRECAUTIONS COULD RESULT IN ACCIDENTAL AIRBAG DEPLOYMENT.

SEAT TRACK (Continued)

WARNING: TO AVOID PERSONAL INJURY OR DEATH ON VEHICLES EQUIPPED WITH THE OCCUPANT CLASSIFICATION SYSTEM (OCS), ONLY THE OCCUPANT CLASSIFICATION MODULE (OCM) AND THE SEAT CUSHION TRIM MAY BE SERVICED SEPARATELY. ALL OTHER COMPONENTS OF THE PASSENGER SIDE FRONT SEAT CUSHION ASSEMBLY MUST BE SERVICED ONLY AS A COMPLETE FACTORY-CALIBRATED, ASSEMBLED AND TAMPER-EVIDENT SERVICE REPLACEMENT PACKAGE. THIS PACKAGE INCLUDES THE FRAME, SPRINGS, PAD, BLADDER, SENSOR, FOAM, WIRING AND A CALIBRATED OCM. WHEN INSTALLING THIS PACKAGE ALWAYS REPLACE ALL OF THE EXISTING COMPONENTS WITH THE NEW COMPONENTS AS A UNIT. DO NOT ATTEMPT TO SEPARATE OR DISCONNECT ANY OF THE NEW OCS COMPONENTS IN THE SERVICE REPLACEMENT PACKAGE FROM EACH OTHER, AND DO NOT ATTEMPT TO REUSE ANY OF THE REPLACED COMPONENTS IN THIS OR ANY OTHER VEHICLE. FAILURE TO TAKE THE PROPER PRECAUTIONS COULD RESULT IN FAILURE OF THE PASSENGER AIRBAG TO DEPLOY WHEN REQUIRED, OR IN PASSENGER AIRBAG DEPLOYMENT WHEN NOT REQUIRED.

(1) Remove the seat back. (Refer to 23 - BODY/SEATS/SEAT BACK - FRONT - REMOVAL)

(2) Remove the outer riser. (Refer to 23 - BODY/SEATS/SEAT RISER - REMOVAL)

(3) Remove the front outer bolts and remove the tracks.

INSTALLATION

WARNING: TO AVOID PERSONAL INJURY OR DEATH, ON VEHICLES EQUIPPED WITH AIRBAGS, DISABLE THE SUPPLEMENTAL RESTRAINT SYSTEM BEFORE ATTEMPTING ANY STEERING WHEEL, STEERING COLUMN, AIRBAG, OCCUPANT CLASSIFICATION SYSTEM, SEAT BELT TENSIONER, IMPACT SENSOR, OR INSTRUMENT PANEL COMPONENT DIAGNOSIS OR SERVICE. DISCONNECT AND ISOLATE THE BATTERY NEGATIVE (GROUND) CABLE, THEN WAIT TWO MINUTES FOR THE SYSTEM CAPACITOR TO DISCHARGE BEFORE PERFORMING FURTHER DIAGNOSIS OR SERVICE. THIS IS THE ONLY SURE WAY TO DISABLE THE SUPPLEMENTAL RESTRAINT SYSTEM. FAILURE TO TAKE THE PROPER PRECAUTIONS COULD RESULT IN ACCIDENTAL AIRBAG DEPLOYMENT.

WARNING: TO AVOID PERSONAL INJURY OR DEATH ON VEHICLES EQUIPPED WITH THE OCCUPANT CLASSIFICATION SYSTEM (OCS), ONLY THE OCCUPANT CLASSIFICATION MODULE (OCM) AND THE SEAT CUSHION TRIM MAY BE SERVICED SEPARATELY. ALL OTHER COMPONENTS OF THE PASSENGER SIDE FRONT SEAT CUSHION ASSEMBLY MUST BE SERVICED ONLY AS A COMPLETE FACTORY-CALIBRATED, ASSEMBLED AND TAMPER-EVIDENT SERVICE REPLACEMENT PACKAGE. THIS PACKAGE INCLUDES THE FRAME, SPRINGS, PAD, BLADDER, SENSOR, FOAM, WIRING AND A CALIBRATED OCM. WHEN INSTALLING THIS PACKAGE ALWAYS REPLACE ALL OF THE EXISTING COMPONENTS WITH THE NEW COMPONENTS AS A UNIT. DO NOT ATTEMPT TO SEPARATE OR DISCONNECT ANY OF THE NEW OCS COMPONENTS IN THE SERVICE REPLACEMENT PACKAGE FROM EACH OTHER, AND DO NOT ATTEMPT TO REUSE ANY OF THE REPLACED COMPONENTS IN THIS OR ANY OTHER VEHICLE. FAILURE TO TAKE THE PROPER PRECAUTIONS COULD RESULT IN FAILURE OF THE PASSENGER AIRBAG TO DEPLOY WHEN REQUIRED, OR IN PASSENGER AIRBAG DEPLOYMENT WHEN NOT REQUIRED.

(1) Install the seat track onto the seat cushion and install the front outer bolts.

(2) Tighten the bolts to 28 N·m (21 ft. lbs.).

(3) Install the seat riser. (Refer to 23 - BODY/SEATS/SEAT RISER - INSTALLATION)

(4) Install the seat back. (Refer to 23 - BODY/SEATS/SEAT BACK - FRONT - INSTALLATION)

SEAT - REAR

REMOVAL

(1) Remove the outer seat belt anchors. (Refer to 8 - ELECTRICAL/RESTRAINTS/SEAT BELT & RETRACTOR - REMOVAL)

(2) Remove the inner seat belt buckles. (Refer to 8 - ELECTRICAL/RESTRAINTS/SEAT BELT BUCKLE - REMOVAL)

(3) Remove the center seat belt anchor. (Refer to 8 - ELECTRICAL/RESTRAINTS/SEAT BELT & RETRACTOR - REMOVAL)

(4) Remove the remaining rear seat fasteners. (Fig. 11)

(5) Remove the front bolts. (Fig. 12)

(6) Fold down the seat backs and remove the seat assembly through the rear door.

SEAT - REAR (Continued)

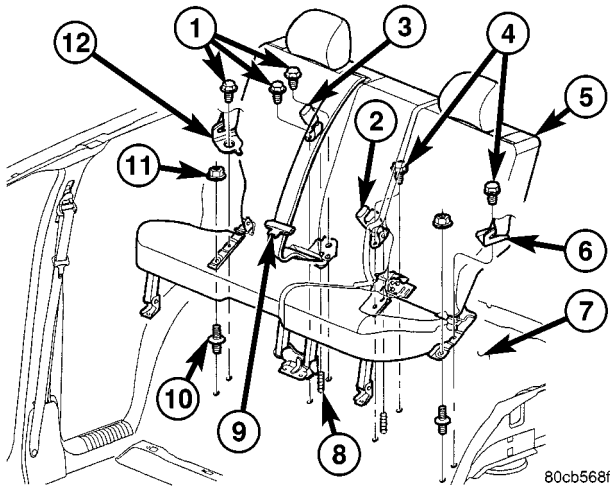

Fig. 11 REAR SEAT ASSEMBLY

1 - SEAT BELT ANCHOR BOLTS
2 - BELT BUCKLES
3 - BELT BUCKLE
4 - SEAT BELT ANCHOR BOLTS
5 - REAR SEAT ASSEMBLY
6 - SEAT BELT ANCHOR
7 - FLOOR PAN
8 - STUDS
9 - CENTER SEAT BELT
10 - FRONT STUDS
11 - NUTS (2)
12 - SEAT BELT ANCHOR

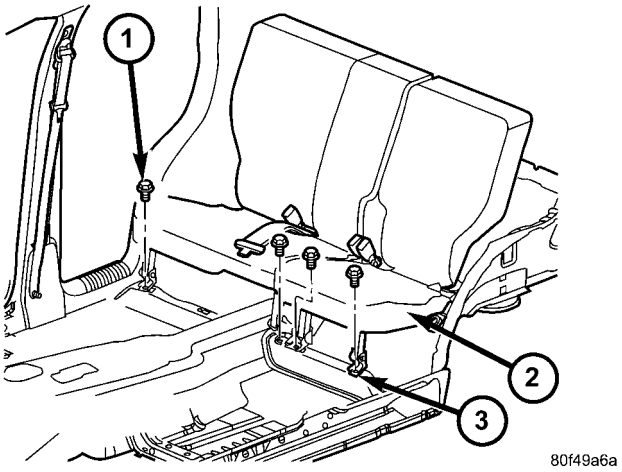

Fig. 12 REAR SEAT - FRONT ATTACHMENTS

1 - BOLTS (4)
2 - REAR SEAT ASSEMBLY
3 - SEAT LEGS

INSTALLATION

(1) Install the seat assembly and position over the studs.

(2) Open the seat back and engage the latches onto the latch strikers.

(3) Install the rear outboard nuts and tighten to 43 N·m (32 ft. lbs.).

(4) Install the outer seat belt anchors. (Refer to 8 - ELECTRICAL/RESTRAINTS/SEAT BELT & RETRACTOR - INSTALLATION)

(5) Install the inner seat belt buckles. (Refer to 8 - ELECTRICAL/RESTRAINTS/SEAT BELT BUCKLE - INSTALLATION)

(6) Install the center seat belt anchor. (Refer to 8 - ELECTRICAL/RESTRAINTS/SEAT BELT & RETRACTOR - INSTALLATION)

(7) Install the front outer seat cushion leg bolts and tighten to 35 N·m (26 ft. lbs.)

SEAT BACK - REAR

REMOVAL

60/40 Split Seat - Left

(1) Remove the outer seat belt anchors. (Refer to 8 - ELECTRICAL/RESTRAINTS/SEAT BELT & RETRACTOR - REMOVAL)

(2) Remove the outer seat anchor nut. (Fig. 11)

(3) Remove the front seat cushion hinge bolt. (Fig. 13)

(4) Remove the center seat back hinge bolts and separate the rear seat assembly. (Fig. 14)

(5) Release the clips and remove the seat back hinge covers.

(6) Lift the seat cushion cover and remove the hinge bolts. (Fig. 15)

(7) Remove the seat back.

60/40 Split Seat - Right

(1) Remove the outer seat belt anchors. (Refer to 8 - ELECTRICAL/RESTRAINTS/SEAT BELT & RETRACTOR - REMOVAL)

(2) Remove the outer seat anchor nut. (Fig. 11)

(3) Remove the inner seat belt buckles. (Refer to 8 - ELECTRICAL/RESTRAINTS/SEAT BELT BUCKLE - REMOVAL)

(4) Remove the front seat cushion hinge bolt. (Fig. 13)

(5) Remove the center seat back hinge bolts and separate the rear seat assembly. (Fig. 14)

(6) Remove the center seat belt anchor. (Refer to 8 - ELECTRICAL/RESTRAINTS/SEAT BELT & RETRACTOR - REMOVAL)

(7) Remove the remaining outer and inner seat anchor bolts. (Fig. 11)

SEAT BACK - REAR (Continued)

(8) Release the clips and remove the seat back hinge covers.

(9) Lift the seat cushion cover and remove the hinge bolts. (Fig. 15)

(10) Remove the seat back.

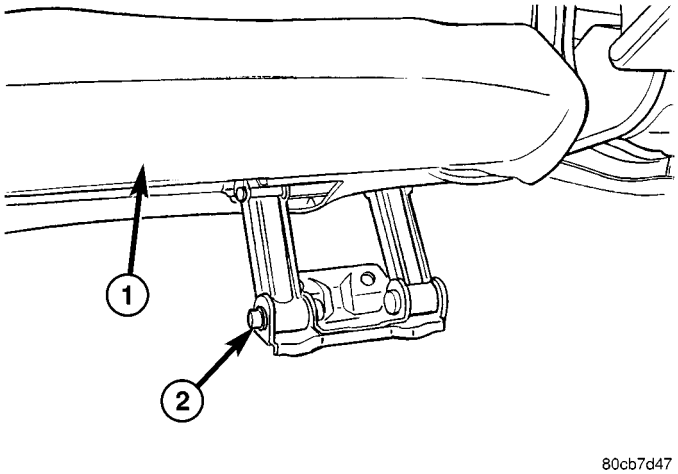

Fig. 13 CENTER CUSHION HINGE

1 - SEAT CUSHION
2 - BOLT

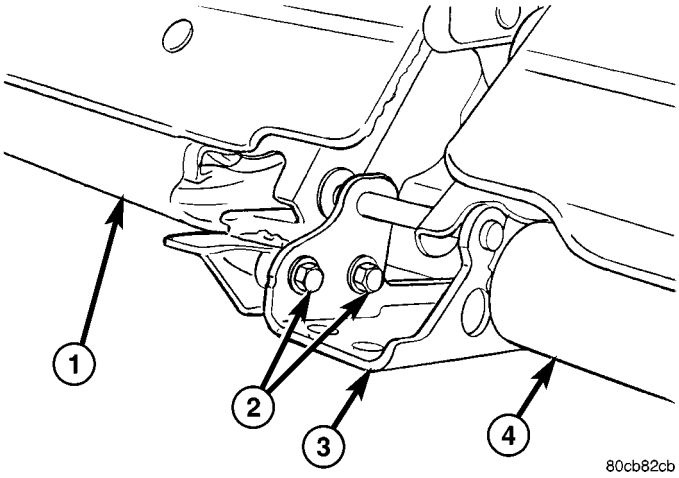

Fig. 14 CENTER SEAT BACK HINGE

1 - SEAT CUSHION
2 - BOLTS
3 - SEAT BACK HINGE
4 - SEAT CUSHION

INSTALLATION

60/40 Split Seat - Left

(1) Install the seat back.

(2) Install the seat back hinge bolt and tighten to 8 N·m (71 in. lbs.).

(3) Position the seat back hinge covers and fully seat the clips.

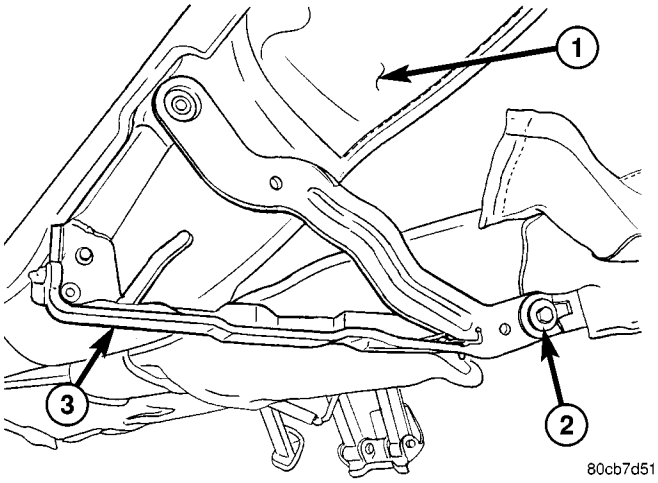

Fig. 15 SEAT BACK HINGE

1 - SEAT BACK
2 - BOLT
3 - SEAT BACK HINGE

(4) Connect the seat halves and install the center seat back hinge bolts.

(5) Tighten the bolts to 28 N·m (21 ft. lbs.).

(6) Install the front seat cushion hinge bolt and tighten to 28 N·m (21 ft. lbs.).

(7) Install the outer seat anchor nut and tighten to 35 N·m (26 ft. lbs.).

(8) Install the outer seat belt anchors. (Refer to 8 - ELECTRICAL/RESTRAINTS/SEAT BELT & RETRACTOR - INSTALLATION)

60/40 Split Seat - Right

(1) Install the seat back.

(2) Install the seat back hinge bolt and tighten to 8 N·m (71 in. lbs.).

(3) Position the seat back hinge covers and fully seat the clips.

(4) Connect the seat halves and install the center seat back hinge bolts.

(5) Tighten the bolts to 28 N·m (21 ft. lbs.).

(6) Install the front seat cushion hinge bolt and tighten to 28 N·m (21 ft. lbs.).

(1) Install the outer and inner seat anchor bolts/nuts and tighten to 35 N·m (26 ft. lbs.).

(2) Install the inner seat belt buckles. (Refer to 8 - ELECTRICAL/RESTRAINTS/SEAT BELT BUCKLE - INSTALLATION)

(3) Install the center seat belt anchor. (Refer to 8 - ELECTRICAL/RESTRAINTS/SEAT BELT & RETRACTOR - INSTALLATION)

(4) Install the outer seat belt anchors. (Refer to 8 - ELECTRICAL/RESTRAINTS/SEAT BELT & RETRACTOR - INSTALLATION)

SEAT BACK COVER - REAR

REMOVAL

(1) Remove the rear seat back. (Refer to 23 - BODY/SEATS/SEAT BACK - REAR - REMOVAL)

(2) Remove the screws and remove the center seat belt guide.

(3) Remove the screws and push pin fasteners and remove the latch handle bezel.

(4) Remove the head rest and remove the guide covers. (Refer to 23 - BODY/SEATS/HEADREST - REMOVAL)

(5) Remove the screws and remove the grocery hooks.

(6) Remove the push pin fasteners and remove the seat back panel.

(7) Disconnect the j-straps.

(8) Remove the seat back cover.

INSTALLATION

(1) Install the seat back cover and connect the j-straps.

(2) Install the seat back panel and install the push pin fasteners.

(3) Install the grocery hooks and install the screws.

(4) Install the head rest guide covers and install the head rest. (Refer to 23 - BODY/SEATS/HEAD-REST - INSTALLATION)

(5) Install the latch handle bezel and install the screws and push pin fasteners.

(6) Install the center seat belt guide and screws.

(7) Install the rear seat back. (Refer to 23 - BODY/SEATS/SEAT BACK - REAR - INSTALLATION)

SEAT BACK CUSHION - REAR

REMOVAL

(1) Remove the seat back cover. (Refer to 23 - BODY/SEATS/SEAT BACK COVER - REAR - REMOVAL)

(2) Separate the cushion from the seat back frame.

INSTALLATION

(1) Position the seat back cushion onto the seat back frame.

(2) Install the seat back cover. (Refer to 23 - BODY/SEATS/SEAT BACK COVER - REAR - INSTALLATION)

FOLDING REAR SEAT BACK LATCH / LOCK

REMOVAL

(1) Remove the rear seat back cushion. (Refer to 23 - BODY/SEATS/SEAT BACK CUSHION / COVER - REAR - REMOVAL)

(2) Disconnect the shoulder belt release cable. (Fig. 16)

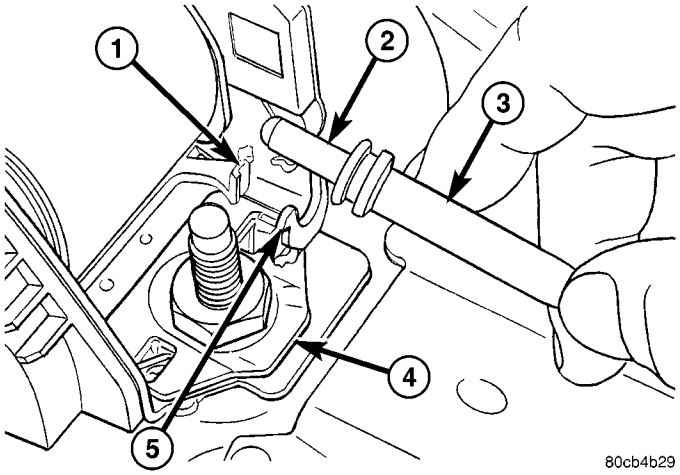

Fig. 16 Seat Back Latch Cable Disengage/Engage

1 - LEVER
2 - PLUNGER
3 - LATCH CABLE FITTING
4 - REAR CENTER RETRACTOR
5 - SUPPORT

(3) Remove the bolts and remove the latch/lock assembly. (Fig. 17)

INSTALLATION

(1) Install the latch/lock assembly and install the bolts.

(2) Tighten the bolts to 28 N·m (21 ft. lbs.).

(3) Connect the shoulder belt release cable.

(4) Install the rear seat back cushion. (Refer to 23 - BODY/SEATS/SEAT BACK CUSHION / COVER - REAR - INSTALLATION)

FOLDING REAR SEAT BACK LATCH / LOCK (Continued)

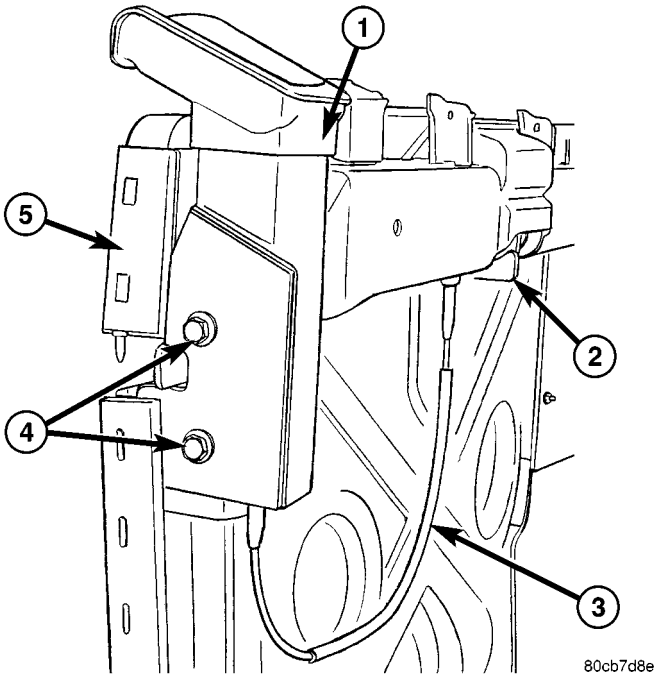

Fig. 17 LATCH/LOCK ASSEMBLY

1 - LATCH/LOCK ASSEMBLY
2 - SEAT BELT RETRACTOR
3 - RETRACTOR RELEASE CABLE
4 - BOLTS
5 - REAR SEAT BACK FRAME

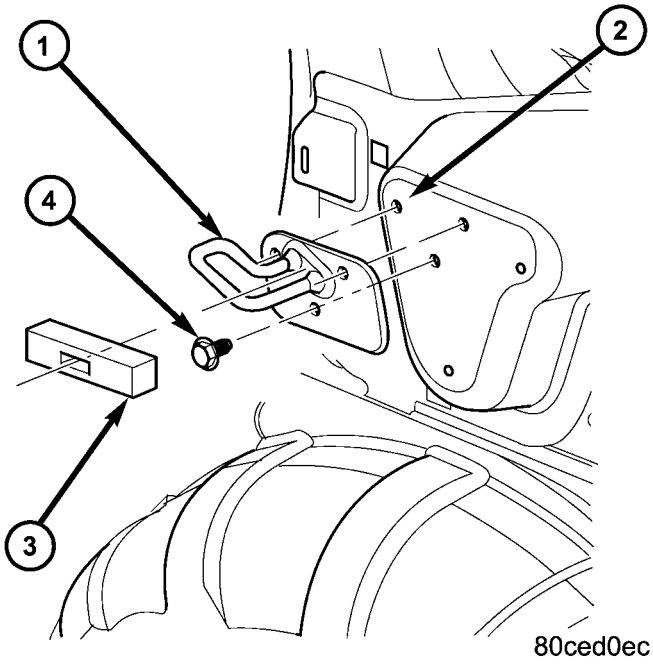

Fig. 18 REAR SEAT BACK LATCH STRIKER

1 - LATCH STRIKER
2 - BODY SIDE PANEL
3 - STRIKER CLOSE-OUT
4 - BOLTS (3)

REAR SEAT BACK LATCH STRIKER

REMOVAL

(1) Remove the quarter trim panel. (Refer to 23 - BODY/INTERIOR/QUARTER TRIM PANEL - REMOVAL)

(2) Remove the bolts and remove the striker. (Fig. 18)

INSTALLATION

(1) Position the striker and install the bolts.

(2) Tighten the bolts to 35 N·m (26 ft. lbs.).

(3) Install the quarter trim panel. (Refer to 23 - BODY/INTERIOR/QUARTER TRIM PANEL - INSTALLATION)

SEAT BACK FRAME - REAR

REMOVAL

(1) Remove the center seat belt retractor, if equipped. (Refer to 8 - ELECTRICAL/RESTRAINTS/ SEAT BELT & RETRACTOR - REMOVAL)

(2) Remove the seat back latch/lock assembly. (Refer to 23 - BODY/SEATS/FOLDING REAR SEAT BACK LATCH / LOCK - REMOVAL)

INSTALLATION

(1) Install the seat back latch/lock assembly. (Refer to 23 - BODY/SEATS/FOLDING REAR SEAT BACK LATCH / LOCK - INSTALLATION)

(2) Install the center seat belt retractor, if equipped. (Refer to 8 - ELECTRICAL/RESTRAINTS/ SEAT BELT & RETRACTOR - INSTALLATION)

SEAT CUSHION - REAR

REMOVAL

(1) Remove the seat back. (Refer to 23 - BODY/ SEATS/SEAT BACK - REAR - REMOVAL)

(2) Disconnect the j-straps and remove the seat cushion and cover.

INSTALLATION

(1) Position the seat cushion and cushion cover onto the seat frame.

(2) Connect the j-straps.

(3) Install the seat back. (Refer to 23 - BODY/ SEATS/SEAT BACK - REAR - INSTALLATION)

STATIONARY GLASS

TABLE OF CONTENTS

page

DOOR GLASS
REMOVAL 97
INSTALLATION 97
QUARTER WINDOW
REMOVAL 97
INSTALLATION 97
WINDSHIELD
WARNING
WINDSHIELD SAFETY PRECAUTIONS 98
REMOVAL 98
INSTALLATION 98

DOOR GLASS

REMOVAL

(1) Remove the rear door glass run channel. (Refer to 23 - BODY/DOORS - REAR/GLASS RUN CHANNEL - REMOVAL)

INSTALLATION

(1) Install the rear door glass run channel. (Refer to 23 - BODY/DOORS - REAR/GLASS RUN CHANNEL - INSTALLATION)

QUARTER WINDOW

REMOVAL

(1) Remove the headliner as necessary to gain access to the glass seal from the inside. (Refer to 23 - BODY/INTERIOR/HEADLINER - REMOVAL)

(2) Cut urethane bonding from around quarter window glass using a suitable sharp cold knife. A pneumatic cutting device can be used if available.

(3) Separate glass from vehicle.

INSTALLATION

CAUTION: Open a window before installing glass. This will avoid pressurizing the passenger compartment. If a door or swing gate flip-up glass is slammed before urethane is cured, water leaks can result.

The window opening fence should be cleaned of old urethane bonding material.

(1) Install the headliner as necessary. (Refer to 23 - BODY/INTERIOR/HEADLINER - INSTALLATION)

(2) Clean inside of glass with Mopar Glass Cleaner and lint-free cloth.

(3) Apply PVC (vinyl) primer 25 mm (1 in.) wide around edge of glass. Wipe with clean/dry lint-free cloth.

(4) Apply fence primer around edge of fence. Allow at least eighteen minutes drying time.

(5) Apply a 10 mm (0.4 in.) bead of urethane around window vinyl border location.

(6) Position glass into window opening and lock clips into place.

WINDSHIELD

WARNING

WINDSHIELD SAFETY PRECAUTIONS

WARNING: Do not operate the vehicle within 24 hours of windshield installation. It takes at least 24 hours for urethane adhesive to cure. If it is not cured, the windshield may not perform properly in an accident.

- **Urethane adhesives are applied as a system. Use glass cleaner, glass prep solvent, glass primer, pvc (vinyl) primer and pinch weld (fence) primer provided by the adhesive manufacturer. If not, structural integrity could be compromised.**
- **Daimlerchrysler does not recommend glass adhesive by brand. Technicians should review product labels and technical data sheets, and use only adhesives that their manufactures warrant will restore a vehicle to the requirements of fmvss 212. Technicians should also insure that primers and cleaners are compatible with the particular adhesive used.**
- **Be sure to refer to the urethane manufacturer's directions for curing time specifications, and do not use adhesive after its expiration date.**
- **Vapors that are emitted from the urethane adhesive or primer could cause personal injury. Use them in a well-ventilated area.**
- **Skin contact with urethane adhesive should be avoided. Personal injury may result.**
- **Always wear eye and hand protection when working with glass.**

CAUTION: Protect all painted and trimmed surfaces from coming in contact with urethane or primers. Be careful not to damage painted surfaces when removing moldings or cutting urethane around windshield.

REMOVAL

(1) Remove inside rear view mirror. (Refer to 23 - BODY/INTERIOR/REAR VIEW MIRROR - REMOVAL)

(2) Remove cowl cover. (Refer to 23 - BODY/EXTERIOR/COWL GRILLE - REMOVAL)

(3) Remove screws attaching windshield side molding to A-pillar.

(4) Cut urethane bonding from around windshield using a suitable sharp cold knife. A pneumatic cutting device can be used if available.

(5) Separate windshield from vehicle.

INSTALLATION

WARNING: REVIEW ALL WARNINGS AND CAUTIONS IN THIS GROUP BEFORE PRECEDING WITH INSTALLATION.

CAUTION: Open a window before installing windshield. This will avoid pressurizing the passenger compartment. If a door or swing gate flip-up glass is slammed before urethane is cured, water leaks can result.

The windshield fence should be cleaned of old urethane bonding material. Support spacers should be cleaned and properly installed on weld studs or repair screws at bottom of windshield opening.

(1) Place replacement windshield into windshield opening. Position glass in the center of the opening against the support spacers. Mark the glass at the support spacers with a grease pencil or masking tape and ink pen to use as a reference for installation. Remove replacement windshield from windshield opening.

(2) Position the windshield inside up on a suitable work surface with two padded, wood 10 cm by 10 cm by 50 cm (4 in. by 4 in. by 20 in.) blocks, placed parallel 75 cm (2.5 ft.) apart.

(3) Clean inside of windshield with Mopar Glass Cleaner and lint-free cloth.

(4) Apply clear glass primer 25 mm (1 in.) wide around edge of windshield. Wipe with clean/dry lint-free cloth.

(5) Apply black-out primer 15 mm (.75 in.) wide on top and sides of windshield and 25 mm (1 in.) on bottom of windshield. Allow at least three minutes drying time.

(6) Position windshield spacers on lower fence above support spacers at the edge of the windshield opening.

(7) Align the dot on the upper molding to the tick mark in the center of the glass and install upper molding onto windshield.

(8) Apply a 10 mm (0.4 in.) bead of urethane around perimeter of windshield along the inside of the moldings. Apply two beads along the bottom edge.

(9) Apply fence primer around the perimeter of the windshield opening fence. Allow at least 18 minutes drying time.

(10) With aid of a helper, position windshield over windshield opening. Align reference marks at bottom of windshield to support spacers.

(11) Slowly lower windshield glass to windshield opening fence. Guide top molding into proper position if necessary. Push windshield inward to fence spacers at bottom and until top molding is flush to roof line.

WINDSHIELD (Continued)

(12) Clean excess urethane from exterior with Mopar Super Clean or equivalent.

(13) Install windshield side moldings. (Refer to 23 - BODY/WEATHERSTRIP/SEALS/WINDSHIELD A-PILLAR WEATHERSTRIP - INSTALLATION)

(14) Install cowl grille. (Refer to 23 - BODY/EXTERIOR/COWL GRILLE - INSTALLATION)

(15) Install inside rear view mirror. (Refer to 23 - BODY/INTERIOR/REAR VIEW MIRROR - INSTALLATION)

(16) After urethane has cured, water test windshield to verify repair.

SUNROOF

TABLE OF CONTENTS

	page
SUNROOF	
DESCRIPTION	100
DIAGNOSIS AND TESTING	
WATER DRAINAGE AND WIND NOISE DIAGNOSIS	101
DIAGNOSTIC PROCEDURES	101
GLASS PANEL	
REMOVAL	103
INSTALLATION	103
ADJUSTMENTS	
SUNROOF GLASS PANEL ADJUSTMENT	103
GLASS PANEL SEAL	
REMOVAL	103
INSTALLATION	104
SUNSHADE	
REMOVAL	104
INSTALLATION	104
TROUGH	
REMOVAL	104
INSTALLATION	104
TROUGH GUIDE ASSEMBLY	
REMOVAL	104
INSTALLATION	105
WIND DEFLECTOR	
REMOVAL	105
INSTALLATION	105
OPENING TRIM LACE	
REMOVAL	105
INSTALLATION	105
DRAIN TUBE	
REMOVAL	105
INSTALLATION	106
MODULE/FRAME ASSEMBLY	
REMOVAL	106
INSTALLATION	107
WIRE HARNESS	
REMOVAL	108
INSTALLATION	108
DRIVE MOTOR	
STANDARD PROCEDURE	
DRIVE MOTOR TEACH PROCEDURE	108
REMOVAL	109
INSTALLATION	109
CONTROL SWITCH	
DESCRIPTION	109
OPERATION	109
DIAGNOSIS AND TESTING - CONTROL SWITCH	110
REMOVAL	110
INSTALLATION	110

SUNROOF

DESCRIPTION

WARNING: Keep fingers and other body parts out of sunroof opening at all times.

The sunroof features a power sliding glass panel and a sunshade which can be manually positioned anywhere along its travel, rearward of glass panel front edge.

The sunroof is electrically operated from two switches located on the windshield header, rearward of the map lamp. To operate the sunroof the ignition switch must be in either the Accessory or On/Run position. One switch (vent) is a push button type and opens the sunroof to the vent position only. The other switch (open/close) is a rocker type for opening and closing the sunroof. Pressing and releasing the open button once the sunroof will express open and the wind deflector will raise. If the button is pressed a second time the sunroof will stop in that position. Pressing and holding the close button will close the sunroof. If the close button is released the sunroof will stop in that position.

SUNROOF (Continued)

SUNROOF OPERATION INSTRUCTIONS

SWITCH INPUTS			
	OPEN	CLOSE	VENT
FULL VENT	Push and hold switch until glass stops in flush closed position glass will then express open	Push and hold switch until glass stops in flush closed position.	No action
VENT RANGE	Push and hold switch until glass passes through flush closed position. Glass will then open	Push and hold switch until glass stops in flush closed position.	Push and hold switch until glass stops in full vent position.
FLUSH	1. Press switch for less than 0.65 seconds for express to full open. 2. Press switch for more than 0.65 seconds and glass will stop when switch is released	No action	Press and hold switch. Glass will travel through flush closed to full vent. Glass will stop when switch is released or when fully vented.
FULL OPEN	No action	Press and hold switch until glass stops in flush closed position or anywhere in between.	Press and hold switch. Glass will travel through flush closed to full vent. Glass will stop when switch is released.

DIAGNOSIS AND TESTING

WATER DRAINAGE AND WIND NOISE DIAGNOSIS

The sliding glass panel is designed to seal water entry with a snug fit between the roof and the seal. The fit can be checked by inserting a piece of paper between the roof and the seal. The piece of paper should have some resistance when pulled out when the glass panel is in the closed position. The sunroof housing will drain off a minimum amount of water. Excessive wind noise could result if the gap clearances are exceeded. The sunroof glass panel may need to be adjusted. Refer to Sunroof Glass Panel Adjustment for proper procedures.

Adequate drainage is provided by a drain trough in the sunroof housing which encircles the sliding glass panel and leads to drain hoses. If a wet headliner or other water leak complaints are encountered, before performing any adjustments, first ensure that the drainage system is not plugged or disconnected. Use a pint container to pour water into the sunroof housing drain trough. If water flow is restricted, use compressed air to blow out any material plugging the drain system. Retest system again.

To further check for a disconnected drain hose:

(1) Remove A-pillar trim, sun visors, and map lamps/mini console.

(2) Remove sunroof opening trim lace. (Refer to 23 - BODY/SUNROOF/OPENING TRIM LACE - REMOVAL)

(3) Lower headliner as necessary to gain access to sunroof housing drain tubes. (Refer to 23 - BODY/INTERIOR/HEADLINER - REMOVAL)

(4) Repair as necessary.

(5) Install headliner. (Refer to 23 - BODY/INTERIOR/HEADLINER - INSTALLATION)

(6) Install sunroof opening trim lace. (Refer to 23 - BODY/SUNROOF/OPENING TRIM LACE - INSTALLATION)

DIAGNOSTIC PROCEDURES

Before beginning sunroof diagnostics verify that all other power accessories are in proper operating condition. Refer to Sunroof Diagnostic Chart for possible causes. If not, a common electrical problem may exist. Refer to Wiring Diagrams, in this publication for circuit, splice and component descriptions. Check

SUNROOF (Continued)

the condition of the circuit protection (20 amp circuit breaker in cavity 19 of the Junction Block). Inspect all wiring connector pins for proper engagement and continuity. Check for battery voltage at the power sunroof drive motor, refer to Wiring Diagrams, for circuit information. If battery voltage of more than 9 volts is detected at the drive motor, proceed with the following tests (the drive motor will not operate at less than 9 volts).

Before beginning diagnosis for wind noise or water leaks, verify that the problem was not caused by releasing the control switch before the sunroof was fully closed. The sunroof module has a water-management system. If however, the sunroof glass is in a partial closed position, high pressure water may be forced beyond the water management system boundaries and onto the headlining.

SUNROOF DIAGNOSIS CHART

SYMPTOM	POSSIBLE CAUSE
Sunroof motor inoperative.	Faulty control switch. Faulty circuit ground between sunroof drive motor, control switch, and body harness. Faulty power circuit between sunroof drive motor, control switch, and body harness. Faulty drive motor. Faulty drive motor electrical connector.
Audible whine when switch is depressed, sunroof does not operate.	Faulty drive motor. Binding cable.
Audible clicking or ratcheting when switch is pressed, sunroof does not operate.	Broken or worn drive cable. Worn drive motor gear. Mechanisms not synchronized.
Sunroof vents and opens, but does not close.	Binding cable. Faulty circuit. Faulty control switch. Faulty drive motor.
Sunroof vents, but does not open.	Binding cable or mechanism. Faulty circuit. Faulty switch. Faulty drive motor.
Sunroof does not vent.	Binding cable or mechanism. Faulty circuit. Faulty control switch. Faulty drive motor.
Sunroof water leak.	Drain tubes clogged or kinked or disconnected from the sunroof. Glass panel improperly adjusted. Faulty glass panel seal.
Gurgling sound from sunroof.	Low spot in drain hose routing, allowing water to stand.
Wind noise from sunroof.	Front of glass panel too high or rear too low. Wind deflector not deploying. Glass not centered in opening. Faulty glass panel seal.

SUNROOF (Continued)

SYMPTOM	POSSIBLE CAUSE
Rattles from open sunroof while driving.	Loose or broken attaching hardware. Worn or broken mechanism.
Sunroof does not stop in the fully closed position.	Drive motor has lost position of glass, teach procedure required to reprogram drive motor. Refer to sunroof drive motor teach procedure.

GLASS PANEL

REMOVAL

(1) Slide sunshade rearward to the open position.
(2) Move the glass panel to the closed position.
(3) Remove the four glass panel screws (Fig. 1).
(4) Lift off glass panel and remove from vehicle.

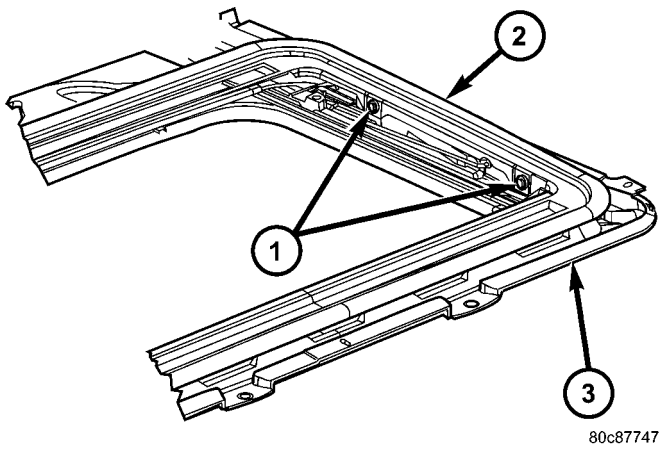

Fig. 1 GLASS PANEL

1 - SCREWS
2 - GLASS PANEL
3 - MODULE ASSEMBLY

INSTALLATION

(1) Position glass panel on to mechanism lift arm.
(2) Start the four attaching screws.
(3) Center glass in opening by running a business card around the glass.
(4) Adjust glass panel. (Refer to 23 - BODY/SUNROOF/GLASS PANEL - ADJUSTMENTS)

ADJUSTMENTS

SUNROOF GLASS PANEL ADJUSTMENT

(1) Move the sunshade rearward to the open position.
(2) Move the sunroof glass panel to the fully closed position.
(3) Adjust the glass one corner at a time.
(a) Loosen four glass screws (Fig. 2).
(b) Lift glass assembly and align the top of the glass panel to the top of the roof panel.
(c) Tighten screw to 3.5 N·m (31 in. lbs.).
(d) Repeat steps a. and b. for each corner of the glass panel.
(e) When properly adjusted, the front of the glass panel is 1.75 mm (0.07 in.) to 2.75 mm (0.11 in.) lower than the roof surface and the rear edge of the glass panel is 1.75mm (0.07 in.) to .75 mm (0.03 in.) lower than the roof surface.

NOTE: Glass assembly seal is 2.5mm (0.1 in) higher than the glass panel. Measure at 300mm (11.8 in) outboard of the centerline of the vehicle.

(4) Verify sunroof operation and alignment. Check fit and re-adjust as necessary.

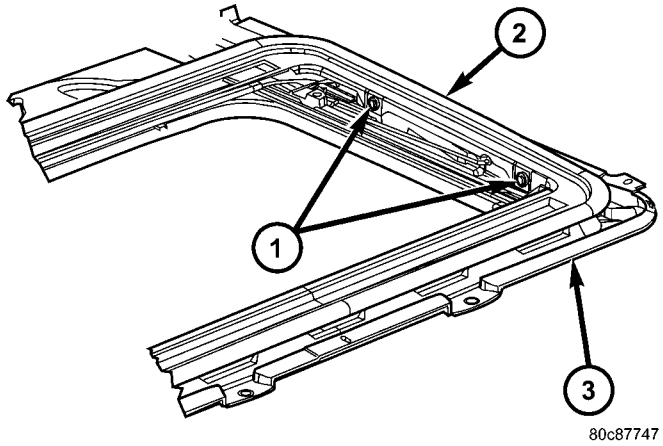

Fig. 2 GLASS PANEL

1 - SCREWS
2 - GLASS PANEL
3 - MODULE ASSEMBLY

GLASS PANEL SEAL

REMOVAL

(1) Remove sunroof glass panel. (Refer to 23 - BODY/SUNROOF/GLASS PANEL - REMOVAL)
(2) Place glass panel on clean work area with the top side up. Support the glass assembly from underside to avoid bending or otherwise damaging the mounting tabs.

GLASS PANEL SEAL (Continued)

(3) Grasp the seal and pull seal away from the glass panel. The seal is a one piece seal.

INSTALLATION

NOTE: Always position seal seam on center of the passenger side of glass panel.

(1) Place seal into position.
(2) Install seal on glass. Using care working the seal around the glass, being careful not to over stretch the seal while installing.
(3) Install the glass panel. (Refer to 23 - BODY/SUNROOF/GLASS PANEL - INSTALLATION)

SUNSHADE

REMOVAL

(1) Remove glass assembly from the sunroof assembly. (Refer to 23 - BODY/SUNROOF/GLASS PANEL - REMOVAL)
(2) Remove two screws from trough assembly (Fig. 3).
(3) Remove trough assembly.
(4) Slide the sunshade forward to disengage the guide feet from the tracks through the cutouts at the front of the tracks.

CAUTION: Use care not to crease the sunshade when removing or installing.

INSTALLATION

(1) Place sunshade into position, through the cutouts at the front of the tracks and slide the sunshade back.
(2) Place trough assembly into position on sunroof module and install the screws.
(3) Install the glass panel. (Refer to 23 - BODY/SUNROOF/GLASS PANEL - INSTALLATION)

TROUGH

REMOVAL

(1) Remove the glass panel. (Refer to 23 - BODY/SUNROOF/GLASS PANEL - REMOVAL)
(2) Through the top of the roof opening remove two screws from trough assembly (Fig. 3).
(3) Remove trough assembly.

INSTALLATION

NOTE: When installing the trough be sure the trough crosses over the top of the sunshade.

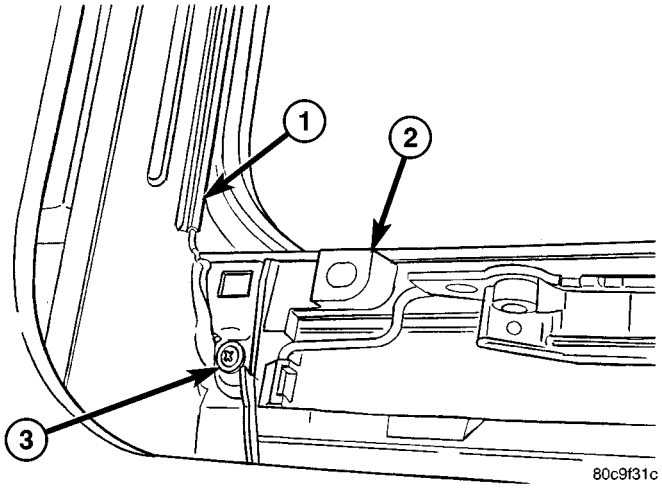

Fig. 3 GUIDE ASSEMBLY TROUGH

1 - TROUGH
2 - TROUGH GUIDE
3 - SCREW

(1) Install the trough and install the two screws.
(2) Install the glass panel. (Refer to 23 - BODY/SUNROOF/GLASS PANEL - INSTALLATION)

TROUGH GUIDE ASSEMBLY

REMOVAL

(1) Remove trough. (Refer to 23 - BODY/SUNROOF/TROUGH - REMOVAL)
(2) Disconnect the guide link (Fig. 4).

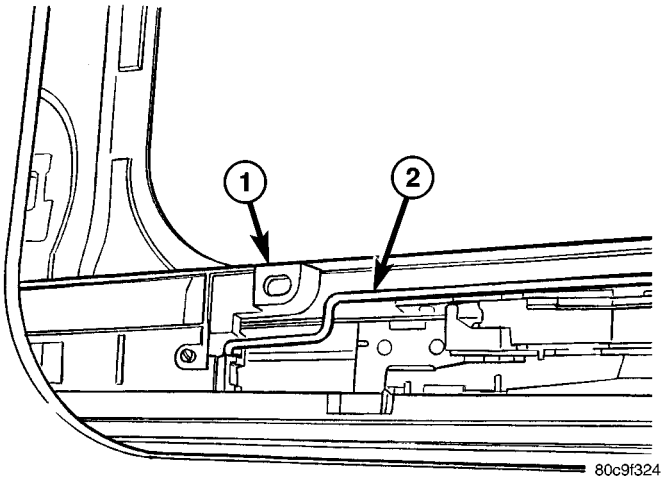

Fig. 4 TROUGH GUIDES

1 - TROUGH GUIDE
2 - GUIDE LINK

(3) Slide trough guide forward and disengage the sliders through the notches in the guide channels (Fig. 5)

TROUGH GUIDE ASSEMBLY (Continued)

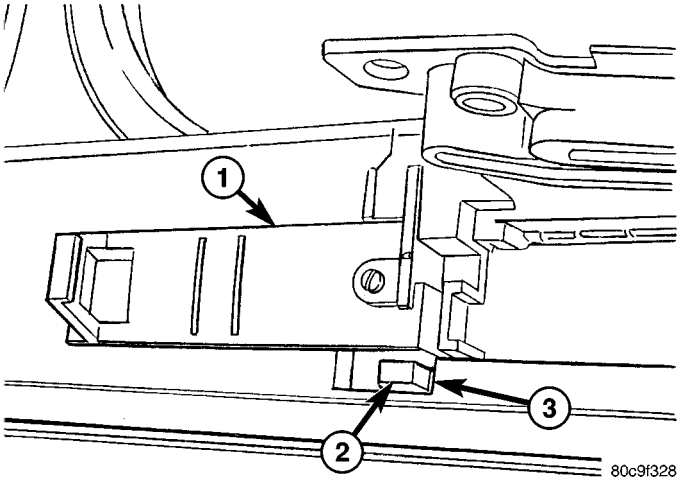

Fig. 5 TROUGH GUIDE REMOVAL

1 - TROUGH GUIDE
2 - SLIDER
3 - NOTCH

INSTALLATION

(1) Install the trough guide and engage the sliders into the guide channels through the small notch in track.

(2) Connect the guide link.

(3) Install the trough. (Refer to 23 - BODY/SUNROOF/TROUGH - INSTALLATION)

WIND DEFLECTOR

REMOVAL

(1) Open sunroof glass panel to the full open position.

(2) Remove screws attaching wind deflector straps to front crossmember (Fig. 6).

(3) Rotate wind deflector back about 110° and slide backwards to disengage from the spring hook.

INSTALLATION

(1) Place wind deflector in position 110° to roof.

(2) Push arms down and forward to engage spring hooks.

(3) Rotate wind deflector forward into correct position. Depress wind deflector down onto front crossmember to check spring function.

(4) Install fasteners attaching wind deflector straps to front crossmember.

(5) Test sunroof operation.

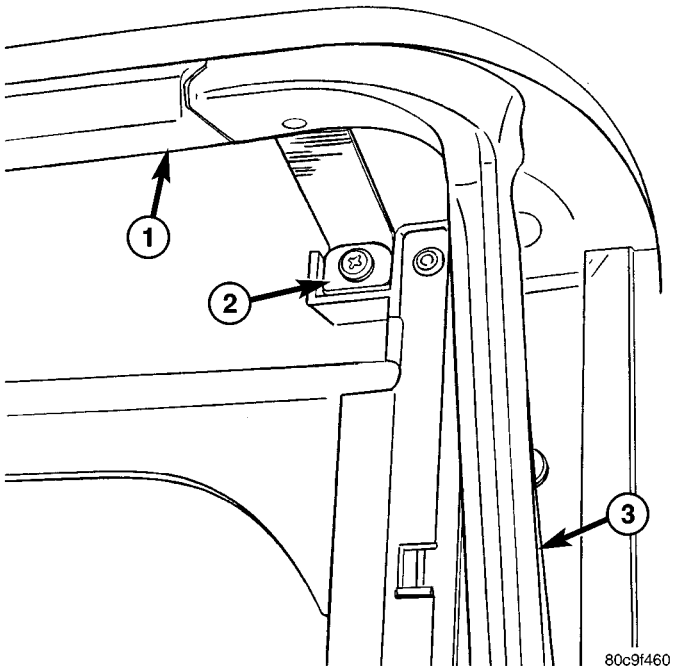

Fig. 6 SUNSHADE

1 - WIND DEFLECTOR
2 - SCREW
3 - SPRING

OPENING TRIM LACE

REMOVAL

(1) Remove lace by starting at the joint center of the opening on driver's side.

(2) Pull one end of the lace away from the headliner until the entire lace is removed.

INSTALLATION

(1) Place end of trim lace into position starting at center of the opening on driver's side.

(2) Push lace into position.

(3) Ensure that the corner radii is fully engage.

(4) Once trim lace is attached to sunroof module begin tucking the headline under the lip on the trim lace working all the way around the opening.

DRAIN TUBE

REMOVAL

FRONT DRAIN TUBES

(1) Move glass panel to the fully closed position.

(2) Remove sunroof opening trim lace.

(3) Remove the headliner. (Refer to 23 - BODY/INTERIOR/HEADLINER - REMOVAL)

(4) Disconnect the drain hose from the sunroof housing (Fig. 7).

DRAIN TUBE (Continued)

(5) Drain any liquid from hose connection, if necessary.

(6) Remove the instrument panel top panel. (Refer to 23 - BODY/INSTRUMENT PANEL/INSTRUMENT PANEL TOP COVER - REMOVAL)

(7) Disconnect the grommet, attachment clips and remove the drain tube.

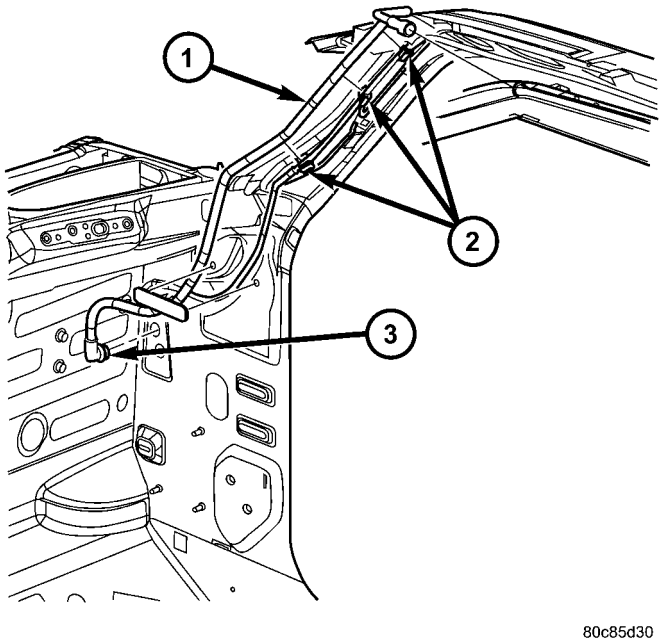

Fig. 7 FRONT DRAIN TUBE

1 - TUBE
2 - CLIPS
3 - GROMMET

REAR DRAIN TUBES

(1) Move glass panel to the fully closed position.

(2) Remove sunroof opening trim lace.

(3) Remove headliner.

(4) Disconnect the drain hose from the sunroof housing (Fig. 8).

(5) Drain any liquid from hose connection, if necessary.

(6) Disconnect the grommet, attachment clips and remove the drain tube.

INSTALLATION

FRONT DRAIN TUBES

(1) Connect the drain hose to the sunroof housing and test drainage.

(2) Connect the body grommet and attachment clips.

(3) Install the instrument panel top panel. (Refer to 23 - BODY/INSTRUMENT PANEL/INSTRUMENT PANEL TOP COVER - INSTALLATION)

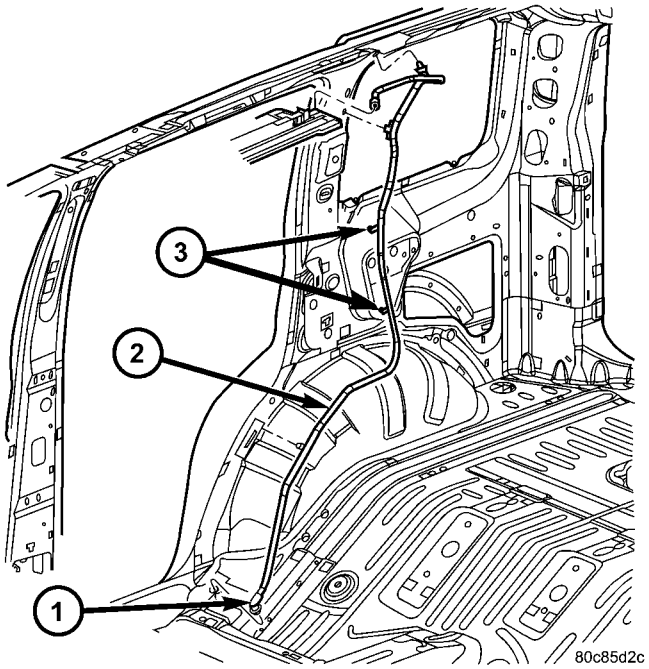

Fig. 8 REAR DRAIN TUBE

1 - GROMMET
2 - TUBE
3 - CLIPS

(4) Install the headliner. (Refer to 23 - BODY/INTERIOR/HEADLINER - INSTALLATION)

(5) Install sunroof opening trim lace. (Refer to 23 - BODY/SUNROOF/OPENING TRIM LACE - INSTALLATION)

REAR DRAIN TUBES

(1) Connect the drain hose to the sunroof housing and test drainage.

(2) Connect the body grommet and attachment clips.

(3) Install the headliner.

(4) Install sunroof opening trim lace.

MODULE/FRAME ASSEMBLY

REMOVAL

(1) Move glass panel to fully closed position.

(2) Disconnect and isolate negative battery cable.

(3) Remove sunroof opening trim lace. (Refer to 23 - BODY/SUNROOF/OPENING TRIM LACE - REMOVAL)

(4) Remove control switch. (Refer to 23 - BODY/SUNROOF/CONTROL SWITCH - REMOVAL)

(5) Remove headliner. (Refer to 23 - BODY/INTERIOR/HEADLINER - REMOVAL)

(6) Disconnect wire harness push in fasteners and electrical connector from vehicle harness. (Fig. 9)

(7) Disconnect drain tubes from sunroof housing.

MODULE/FRAME ASSEMBLY (Continued)

(8) Cut foam support pad at rear of module if necessary.

(9) Remove two module bracket bolts and loosen the remaining fasteners.

(10) With the aid of a helper, remove fasteners attaching sunroof module assembly to roof panel (Fig. 10).

(11) Remove the sunshade. (Refer to 23 - BODY/SUNROOF/SUNSHADE - REMOVAL)

(12) Remove the drive motor. (Refer to 23 - BODY/SUNROOF/DRIVE MOTOR - REMOVAL)

(13) Remove the wire harness.

(14) Remove the trough guides. (Refer to 23 - BODY/SUNROOF/GUIDE ASSEMBLY - REMOVAL)

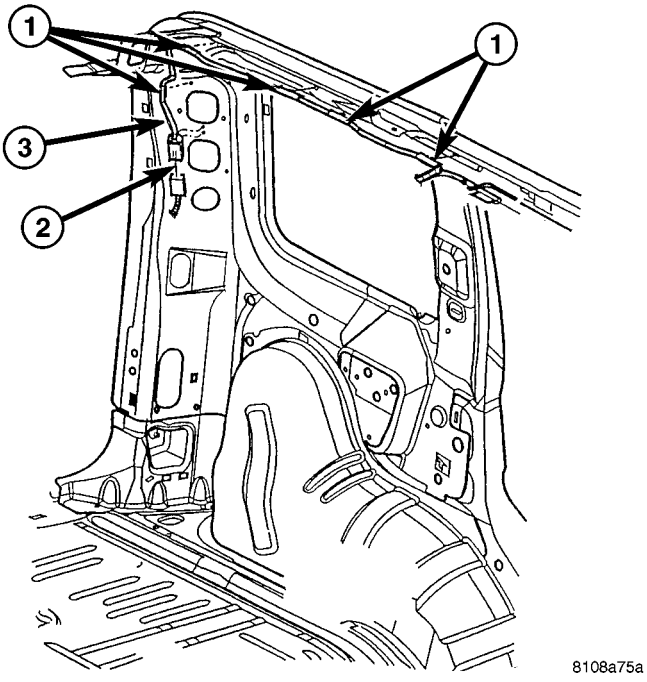

Fig. 9 WIRE HARNESS

1 - CLIPS
2 - ELECTRICAL CONNECTOR
3 - WIRE HARNESS

INSTALLATION

(1) Install the trough guides. (Refer to 23 - BODY/SUNROOF/TROUGH GUIDE ASSEMBLY - INSTALLATION)

(2) Install the drive motor. (Refer to 23 - BODY/SUNROOF/DRIVE MOTOR - INSTALLATION - VEHICLES BUILT ON 9/10/02 AND LATER)

(3) Install the sunshade. (Refer to 23 - BODY/SUNROOF/SUNSHADE - INSTALLATION)

(4) Remove the backing tape from the foam support pad, if necessary.

(5) Raise rear end of sunroof module assembly and guide into position and start fasteners.

(6) Tighten the fasteners to 9 N·m (80 in. lbs.).

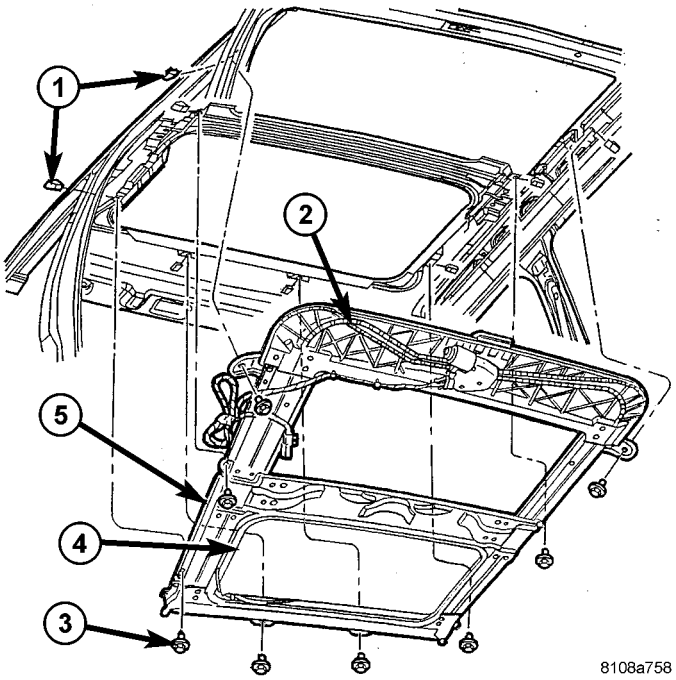

Fig. 10 MODULE ASSEMBLY

1 - U-NUTS
2 - DRIVE MOTOR
3 - BOLTS
4 - GLASS OPENING
5 - MODULE ASSEMBLY

NOTE: If installing the sunroof assembly onto a vehicle built before 9/10/02, it will be necessary to replace the rear drain tube couplings. If installing the sunroof assembly onto a vehicle built on 9/10/02 and later, skip to Step 9.

(7) Using a sharp bladed tool, carefully remove the original drain tube couplings from the drain tubes. (Fig. 11)

(8) Using a soap and water solution carefully install the new drain tube couplings onto the drain tubes. (Fig. 12)

(9) Connect the drain tubes.

(10) Install the wire harness. (Refer to 23 - BODY/SUNROOF/WIRE HARNESS - INSTALLATION)

(11) Connect battery negative cable.

(12) Temporarily install sunroof switch and perform the sunroof motor teach procedure. (Refer to 23 - BODY/SUNROOF/DRIVE MOTOR - STANDARD PROCEDURE - TEACH PROCEDURE)

(13) Test sunroof operation, adjust glass as necessary. (Refer to 23 - BODY/SUNROOF/GLASS PANEL - ADJUSTMENTS)

(14) Install the headliner. (Refer to 23 - BODY/INTERIOR/HEADLINER - INSTALLATION)

(15) Install the opening trim lace. (Refer to 23 - BODY/SUNROOF/OPENING TRIM LACE - INSTALLATION)

MODULE/FRAME ASSEMBLY (Continued)

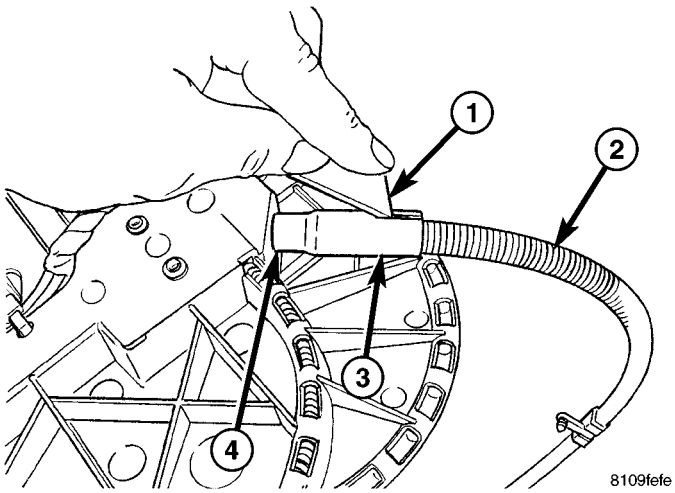

Fig. 11 COUPLING REMOVAL

1 - SHARP BLADED TOOL
2 - DRAIN TUBE
3 - COUPLING
4 - SUNROOF DRAIN TUBE NIPPLE

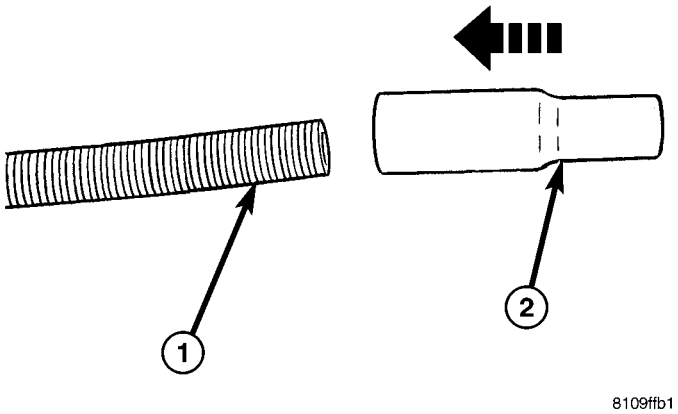

Fig. 12 COUPLING INSTALLATION

1 - DRAIN TUBE
2 - COUPLING

WIRE HARNESS

REMOVAL

(1) Remove the headliner. (Refer to 23 - BODY/INTERIOR/HEADLINER - REMOVAL)

(2) Disconnect wire harness from vehicle harness.

(3) Disconnect drive motor electrical connector and cut tie straps. (Fig. 13)

(4) Remove harness.

INSTALLATION

(1) Connect drive motor and vehicle harness electrical connectors.

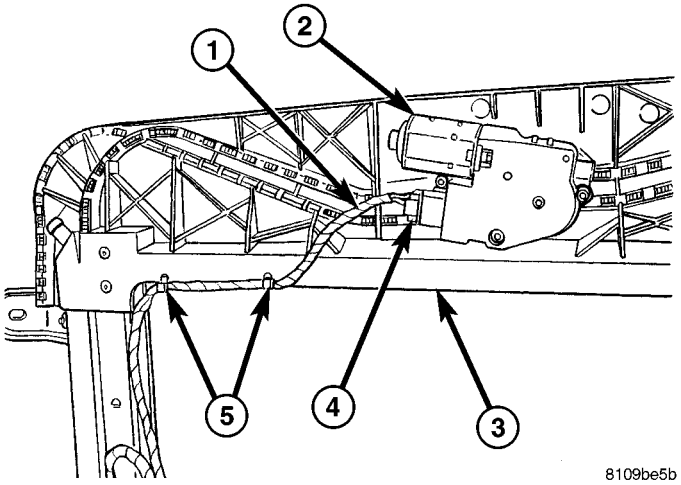

Fig. 13 WIRE HARNESS

1 - WIRE HARNESS
2 - DRIVE MOTOR
3 - SUNROOF MODULE ASSEMBLY
4 - ELECTRICAL CONNECTOR
5 - TIE STRAPS

(2) Replace the two tie straps on the module assembly.

(3) Install the headliner. (Refer to 23 - BODY/INTERIOR/HEADLINER - INSTALLATION)

DRIVE MOTOR

STANDARD PROCEDURE

DRIVE MOTOR TEACH PROCEDURE

REPLACEMENT DRIVE MOTOR

(1) Press and hold the sunroof switch open until the sunroof glass fully opens, automatically reverses direction, and stops at a position just forward of the full open position.

(2) Release sunroof switch.

(3) Within five seconds of releasing sunroof switch, press and hold the sunroof switch open again until the sunroof glass closes, goes into vent position, and then finally stops in the closed position.

(4) Release sunroof switch. Sunroof will now operate normally.

ORIGINAL DRIVE MOTOR

(1) Press and hold sunroof switch open until the sunroof glass opens and stops.

(2) Release sunroof switch.

(3) Press and hold sunroof switch open once again for at least 10 seconds. After 10 seconds of pressing the switch open, the sunroof glass will automatically move and stop at a new location.

DRIVE MOTOR (Continued)

(4) Release sunroof switch.

(5) Within five seconds of releasing the sunroof switch, press and hold the switch open again until the sunroof glass closes, goes into vent position, and then finally stops in the closed position.

(6) Release sunroof switch. The sunroof will now operate normally.

REMOVAL

(1) Remove headliner. (Refer to 23 - BODY/INTERIOR/HEADLINER - REMOVAL)

(2) Disconnect the electrical connector (Fig. 14).

(3) Remove three motor assembly attaching screws from bottom side of motor assembly and remove motor assembly from the motor bracket.

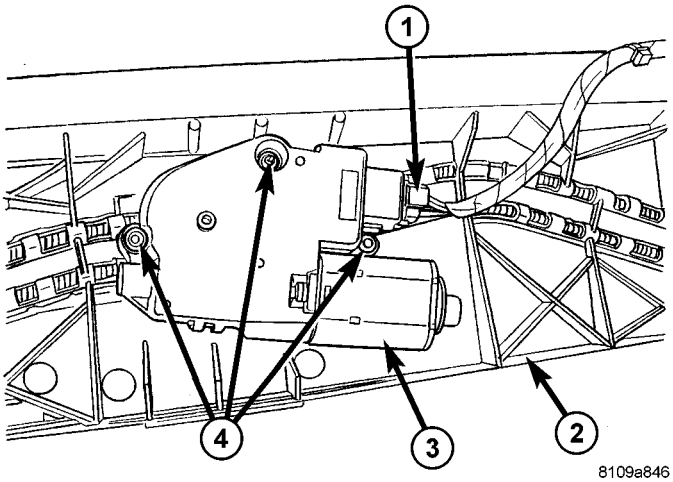

Fig. 14 DRIVE MOTOR

1 - ELECTRICAL CONNECTOR
2 - MODULE ASSEMBLY
3 - DRIVE MOTOR
4 - MOUNTING SCREWS

INSTALLATION

(1) If sunroof was open when drive motor was removed, carefully move glass panel into closed position and remove glass panel. (Refer to 23 - BODY/SUNROOF/GLASS PANEL - REMOVAL)

(2) Set lifter arm timing by manually sliding the mechanisms in the track until timing holes in the trollies are aligned with the timing holes in the lifter arm cams and insert pins into the mechanisms to hold mechanisms in closed position. (Fig. 15)

(3) Place motor into position and install screws attaching motor to bracket.

(4) Tighten the screws to 3 N·m (26 in. lbs.).

(5) If sunroof glass panel was removed previously, remove the timing pins and install the sunroof glass panel. (Refer to 23 - BODY/SUNROOF/GLASS PANEL - INSTALLATION)

(6) Temporarily install sunroof switch and perform the sunroof motor teach procedure. (Refer to 23 - BODY/SUNROOF/DRIVE MOTOR - STANDARD PROCEDURE - TEACH PROCEDURE)

(7) Test sunroof operation, adjust glass as necessary. (Refer to 23 - BODY/SUNROOF/GLASS PANEL - ADJUSTMENTS)

(8) Install headliner. (Refer to 23 - BODY/INTERIOR/HEADLINER - INSTALLATION)

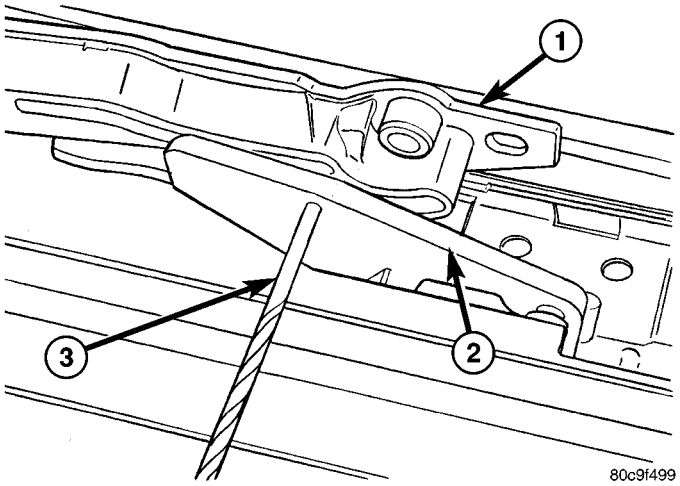

Fig. 15 LIFT ARM POSITIONING

1 - LIFTER ARM
2 - TROLLEY
3 - ALIGNMENT PIN

CONTROL SWITCH

DESCRIPTION

Vehicles equipped with a power sunroof utilize an sunroof control switch. On this model, the sunroof control switch is located in the overhead console, in between the two reading lamps. The switch is mounted in the overhead console with four plastic retaining tabs, molded into the switch housing.

This switch incorporates four selections of operation open, auto open, close and vent. The individual switches in the sunroof control switch unit cannot be repaired. If one switch is damaged or faulty, the entire sunroof control switch unit must be replaced.

OPERATION

With the operation of the sunroof control switch, voltage is directed to the sunroof motor, through the switch contacts or control module. If the control switch is depressed and held depressed the voltage signal is controlled manually through the switch contacts, so when the switch is released the sunroof stops.

Refer to the owners manual for more information on the operation of the sunroof switch and system.

CONTROL SWITCH (Continued)

DIAGNOSIS AND TESTING - CONTROL SWITCH

The following test will determine if the sunroof control switch is operating properly.

(1) Remove the overhead console from the headliner (Refer to 8 - ELECTRICAL/OVERHEAD CONSOLE - REMOVAL).

(2) Remove the sunroof control switch from the overhead console (Refer to 23 - BODY/SUNROOF/CONTROL SWITCH - REMOVAL).

(3) Using an ohmmeter, test the switch terminals for proper continuity using the table below. If any of the terminals do not show proper continuity, replace the sunroof control switch.

SWITCH POSITION (DEPRESSED)	CONTINUITY BETWEEN TERMINALS
VENT (V)	3, 4
OPEN (AUTO)	1, 4
CLOSE	2, 4

REMOVAL

(1) Disconnect and isolate the negative battery cable.

(2) Remove the overhead console from the headliner (Refer to 8 - ELECTRICAL/OVERHEAD CONSOLE - REMOVAL).

(3) Disconnect the sunroof control switch electrical connector. Depress the connector retaining tab and pull the connector straight out.

(4) To remove the switch from the overhead console, push on the back of the switch until it comes free from the overhead console.

INSTALLATION

(1) Install the switch in the overhead console assembly. Be certain the switch is securely snapped in place.

(2) Connect the sunroof control switch electrical connector. Be certain the switch connector is securely snapped in place.

(3) Install the overhead console (Refer to 8 - ELECTRICAL/OVERHEAD CONSOLE - INSTALLATION).

(4) Connect the negative battery cable.

WEATHERSTRIP/SEALS

TABLE OF CONTENTS

page

A-PILLAR SEAL
REMOVAL 111
INSTALLATION 111
COWL WEATHERSTRIP
REMOVAL 111
INSTALLATION 111
DOOR PRIMARY WEATHERSTRIP
REMOVAL 111
INSTALLATION 111
DOOR LOWER WEATHERSTRIP
REMOVAL 112
INSTALLATION 112
FRONT DOOR OUTER BELT MOLDING
REMOVAL 112
INSTALLATION 112
SWING GATE BELTLINE WEATHERSTRIP
REMOVAL 112
INSTALLATION 112
SWING GATE OPENING WEATHERSTRIP
REMOVAL 112
INSTALLATION 113
REAR DOOR OUTER BELT MOLDING
REMOVAL 113
INSTALLATION 113
SIDE RAIL WEATHERSTRIP/RETAINER
REMOVAL 113
INSTALLATION 114
WINDSHIELD A-PILLAR WEATHERSTRIP/ RETAINER
REMOVAL 114
INSTALLATION 114
COWL/PLENUM SEAL
REMOVAL 114
INSTALLATION 114
COWL/PLENUM WINDOW BAFFLE SEAL
REMOVAL 114
INSTALLATION 114
AIR INLET SEAL
REMOVAL 114
INSTALLATION 114
FRONT DOOR INNER BELT WEATHERSTRIP
REMOVAL 114
INSTALLATION 114
REAR DOOR INNER BELT WEATHERSTRIP
REMOVAL 114
INSTALLATION 114

A-PILLAR SEAL

REMOVAL

(1) Open the doors and peal the seal away from the a-pillar/windshield and the side rail weather strip flanges.

INSTALLATION

(1) Position the no-notch end of the seal to the rear end of the rail retainer above the c-pillar. Seat the seal fully onto the retainer starting at the rear and working forward along the retainer. Make sure the seal covers the retainer all the way to the c-pillar end and the seal is oriented with the lip down and the bulbs up.

COWL WEATHERSTRIP

REMOVAL

(1) Open the hood and peal the cowl seal from the cowl panel and cowl flange.

INSTALLATION

(1) Position the weatherstrip over the cowl flange and the cowl grille and seat fully.

DOOR PRIMARY WEATHERSTRIP

REMOVAL

(1) Remove the lower b-pillar trim. (Refer to 23 - BODY/INTERIOR/B-PILLAR LOWER TRIM - REMOVAL)
(2) Peal seal off of the door opening flange.

INSTALLATION

(1) Position the seal to the bottom of the door opening, with bulb facing outboard, starting the installation at the center of the lower flange. Press the seal onto the sill flange and work around the perimeter of the door opening until fully seated. Work ½ the way around and then start at the other end of the seal working back, making sure the splice joint has no gap and smoothing the seal to avoid puckers or wrinkles.

DOOR PRIMARY WEATHERSTRIP (Continued)

(2) Install the lower b-pillar trim. (Refer to 23 - BODY/INTERIOR/B-PILLAR LOWER TRIM - INSTALLATION)

(3) When installing a new weatherstrip on the front door opening, remove the tear strip starting at the splice and moving around the front of the door to the back of the opening.

(4) When installing a new weatherstrip on the rear door opening, remove the tear strip starting at the splice and moving around the back of the door to the front of the opening.

DOOR LOWER WEATHERSTRIP

REMOVAL

(1) Carefully disengage the push pin fasteners and remove the seal.

INSTALLATION

(1) Position the seal so that the flat side of the lip faces inboard, and seat the push pin fasteners.

FRONT DOOR OUTER BELT MOLDING

REMOVAL

(1) Lower window completely.

(2) Remove trim panel as necessary. (Refer to 23 - BODY/DOOR - FRONT/TRIM PANEL - REMOVAL)

(3) Insert special tool #9093 between belt molding and glass at rear and then slide tool forward approximately 14 cm (5.5 in.). (Fig. 1)

(4) Push down on outer belt molding and rotate upper part of tool outward from vehicle approximately 6 – 8 cm (2.5 - 3 in.) then lift up on molding to disengage from locking tab.

(5) Repeat step 3 and 4 at 28 cm (11 in.), 43 cm (17 in.), and 57 cm (22.5 in.) from rear of door.

(6) Remove belt molding.

INSTALLATION

(1) Press the belt molding onto the outer door window flange starting at the rear and working forward.

(2) Install trim panel. (Refer to 23 - BODY/DOOR - FRONT/TRIM PANEL - INSTALLATION)

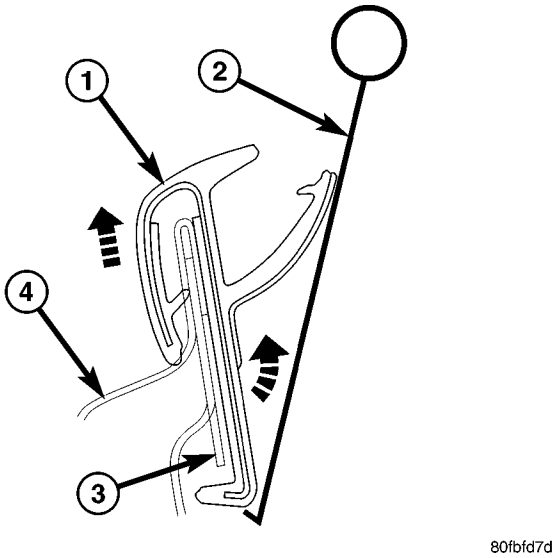

Fig. 1 OUTER BELT MOLDING

1 - OUTER BELT MOLDING
2 - SPECIAL TOOL #9093
3 - RETAINING TAB
4 - DOOR OUTER PANEL

SWING GATE BELTLINE WEATHERSTRIP

REMOVAL

(1) Remove the swing gate trim panel. (Refer to 23 - BODY/SWING GATE/TRIM PANEL - REMOVAL)

(2) Pull seal away from the corner tabs and remove from the swing gate flange.

INSTALLATION

(1) Install the seal over the swing gate flange and seat the corner tabs.

(2) Install the swing gate trim panel. (Refer to 23 - BODY/SWING GATE/TRIM PANEL - INSTALLATION)

SWING GATE OPENING WEATHERSTRIP

REMOVAL

(1) Open the swing gate and using a trim stick C-4755 or equivalent, remove the swing gate lower sill plate.

(2) Peal seal off of the gate opening flange.

SWING GATE OPENING WEATHERSTRIP (Continued)

INSTALLATION

(1) Position the seal to the bottom of the gate opening starting the installation 10 to 13 cm (4 to 5 in.) from the hinge side of the flange with the trim lip facing inboard. Press the seal onto the sill flange and work around the perimeter of the door opening until fully seated. Work in one direction, smoothing the seal to avoid puckers or wrinkles. Pull trim lip cord so that the lip covers the trim edge all around.

(2) Position the lower sill plate and seat the attachment clips fully.

REAR DOOR OUTER BELT MOLDING

REMOVAL

(1) Lower window completely.

(2) Remove trim panel as necessary. (Refer to 23 - BODY/DOORS - REAR/TRIM PANEL - REMOVAL)

(3) Insert special tool #9093 between belt molding and glass at front and then slide tool back approximately 4.5 cm (1.75 in.). (Fig. 2)

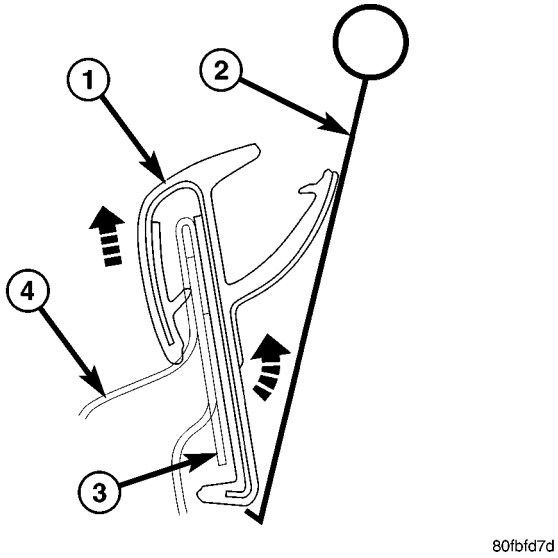

Fig. 2 OUTER BELT MOLDING

1 - OUTER BELT MOLDING
2 - SPECIAL TOOL #9093
3 - RETAINING TAB
4 - DOOR OUTER PANEL

(4) Push down on outer belt molding and rotate upper part of tool outward from vehicle approximately 6 – 8 cm (2.5 - 3 in.) then lift up on molding to disengage from locking tab.

(5) Repeat step 3 and 4 at 23 cm (9 in.) and 41 cm (16 in.).

(6) Loosen division bar bolt and slide tool 57 cm (23 in.) from front of door and disengage the last locking tab. (Fig. 3)

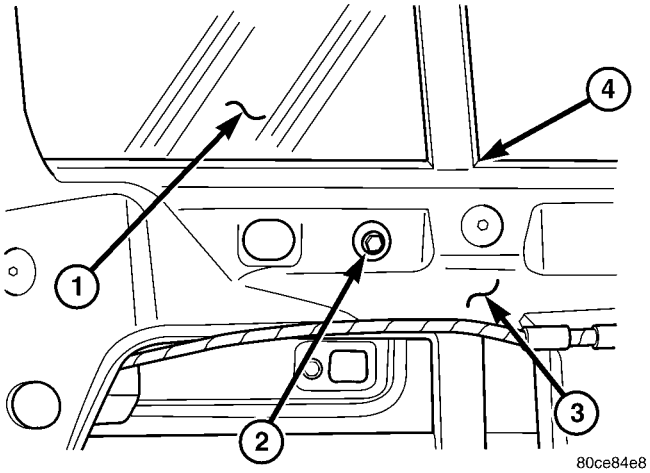

Fig. 3 GLASS DIVISION BAR

1 - STATIONARY DOOR GLASS
2 - DIVISION BAR BOLT (1)
3 - DOOR
4 - GLASS DIVISION BAR

(7) Remove belt molding.

INSTALLATION

(1) Press the belt molding onto the outer door window flange starting at the back and working towards the front.

(2) Tighten the division bar bolt to 9 N·m (80 in. lbs.).

(3) Install the trim panel. (Refer to 23 - BODY/DOORS - REAR/TRIM PANEL - INSTALLATION)

SIDE RAIL WEATHERSTRIP/ RETAINER

REMOVAL

(1) Remove the windshield weatherstrip retainer. (Refer to 23 - BODY/WEATHERSTRIP/SEALS/ WINDSHIELD A-PILLAR WEATHERSTRIP/RETAINER - REMOVAL)

(2) Remove the two screws.

(3) Using a trim stick C-4755 or equivalent, release the push in fasteners and remove the weatherstrip.

SIDE RAIL WEATHERSTRIP/RETAINER (Continued)

INSTALLATION

(1) Position the weatherstrip and seat the push in fasteners.

(2) Install the two screws.

(3) Install the windshield weatherstrip. (Refer to 23 - BODY/WEATHERSTRIP/SEALS/WINDSHIELD A-PILLAR WEATHERSTRIP/RETAINER - INSTALLATION)

WINDSHIELD A-PILLAR WEATHERSTRIP/RETAINER

REMOVAL

(1) Open the doors and peal the a-pillar seal away from the a-pillar/windshield and the side rail weather strip flanges.

(2) Remove the seven screws and remove the weatherstrip.

INSTALLATION

(1) Position the weatherstrip and install the seven screws.

(2) Position the a-pillar seal over the windshield/a-pillar and the side rail weatherstrip flanges and seat fully.

COWL/PLENUM SEAL

REMOVAL

(1) Remove the cowl grille. (Refer to 23 - BODY/EXTERIOR/COWL GRILLE - REMOVAL)

(2) Remove the seal from the plenum flange above the air inlet duct.

INSTALLATION

NOTE: Seal should not be touching the plenum baffle flange seal.

(1) Position the seal on the plenum flange and seat fully.

(2) Install the cowl grille. (Refer to 23 - BODY/EXTERIOR/COWL GRILLE - INSTALLATION)

COWL/PLENUM WINDOW BAFFLE SEAL

REMOVAL

(1) Remove the cowl grille. (Refer to 23 - BODY/EXTERIOR/COWL GRILLE - REMOVAL)

(2) Remove the seal from the window below the cowl/plenum seal.

INSTALLATION

(1) Position the seal against the upper flange of the inner plenum window below the cowl/plenum seal and seat fully.

(2) Install the cowl grille. (Refer to 23 - BODY/EXTERIOR/COWL GRILLE - INSTALLATION)

AIR INLET SEAL

REMOVAL

(1) Open the hood and carefully disengage the push pin fasteners and remove the seal.

INSTALLATION

(1) Position the seal and seat the push pin fasteners fully.

FRONT DOOR INNER BELT WEATHERSTRIP

REMOVAL

(1) Remove the door trim panel. (Refer to 23 - BODY/DOOR - FRONT/TRIM PANEL - REMOVAL)

(2) Rotate the outer belt molding outboard while pulling up to disengage the retention tabs.

INSTALLATION

(1) Press the belt molding onto the trim panel flange starting at the rear and working forward.

(2) Install the door trim panel. (Refer to 23 - BODY/DOOR - FRONT/TRIM PANEL - INSTALLATION)

REAR DOOR INNER BELT WEATHERSTRIP

REMOVAL

(1) Remove the door trim panel. (Refer to 23 - BODY/DOORS - REAR/TRIM PANEL - REMOVAL)

(2) Rotate the outer belt molding outboard while pulling up to disengage the retention tabs.

INSTALLATION

(1) Press the belt molding onto the trim panel flange starting at the rear and working forward.

(2) Install the door trim panel. (Refer to 23 - BODY/DOORS - REAR/TRIM PANEL - INSTALLATION)

BODY STRUCTURE

TABLE OF CONTENTS

page

ASSEMBLY
SPECIFICATIONS
SPECIFICATION 115
WELD AND STRUCTURAL ADHESIVE LOCATIONS
SPECIFICATIONS 118
SEALER LOCATIONS
SPECIFICATIONS 196
OPENING DIMENSIONS
SPECIFICATIONS 220
GAP AND FLUSH
SPECIFICATIONS 225

ASSEMBLY

SPECIFICATIONS

SPECIFICATION

INDEX

DESCRIPTION	FIGURE
COMPLETE BODY STRUCTURE VIEWS	(1)
BODY STRUCTURE - SECTIONS	(2)

ASSEMBLY (Continued)

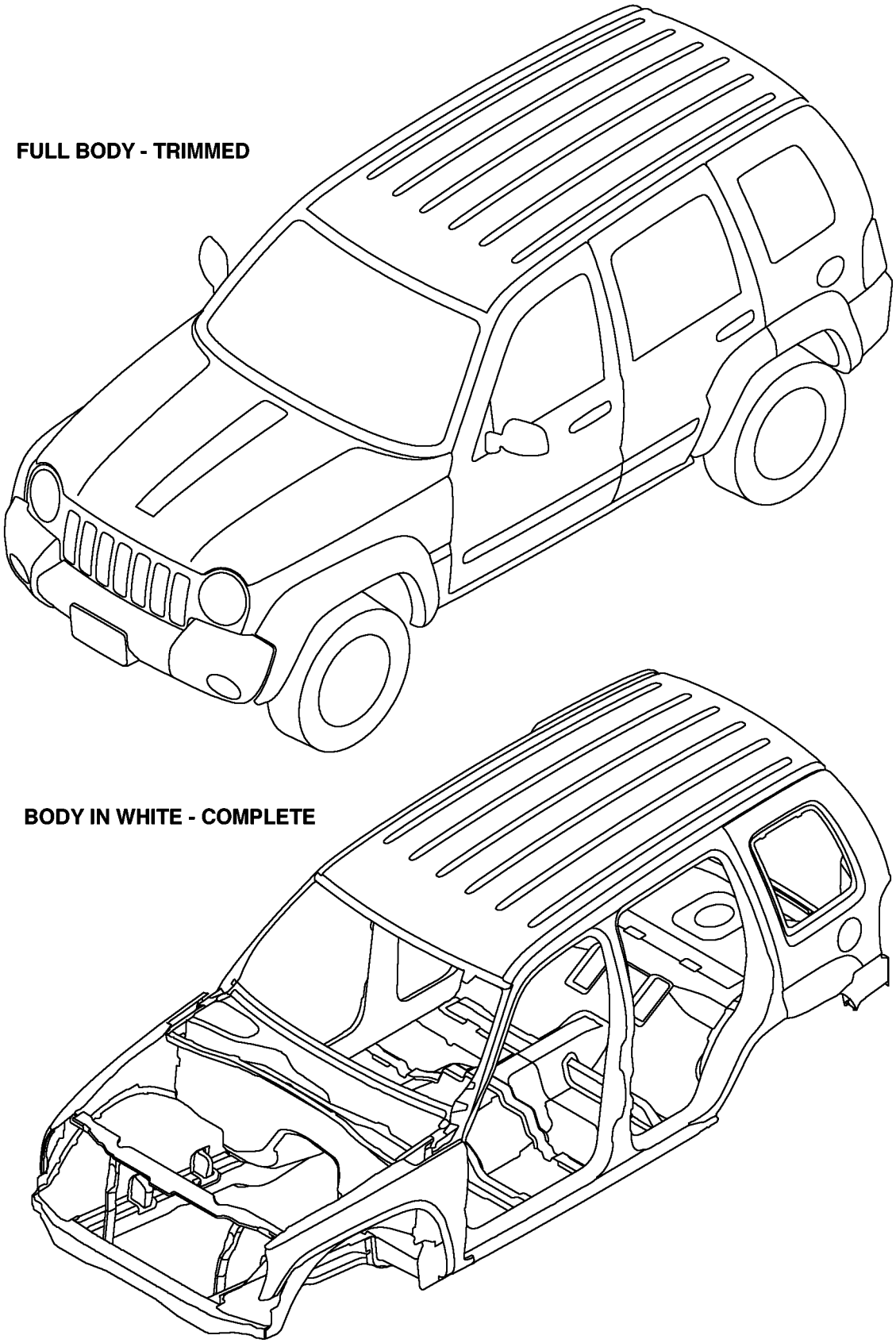

Fig. 1 COMPLETE BODY STRUCTURE VIEWS

ASSEMBLY (Continued)

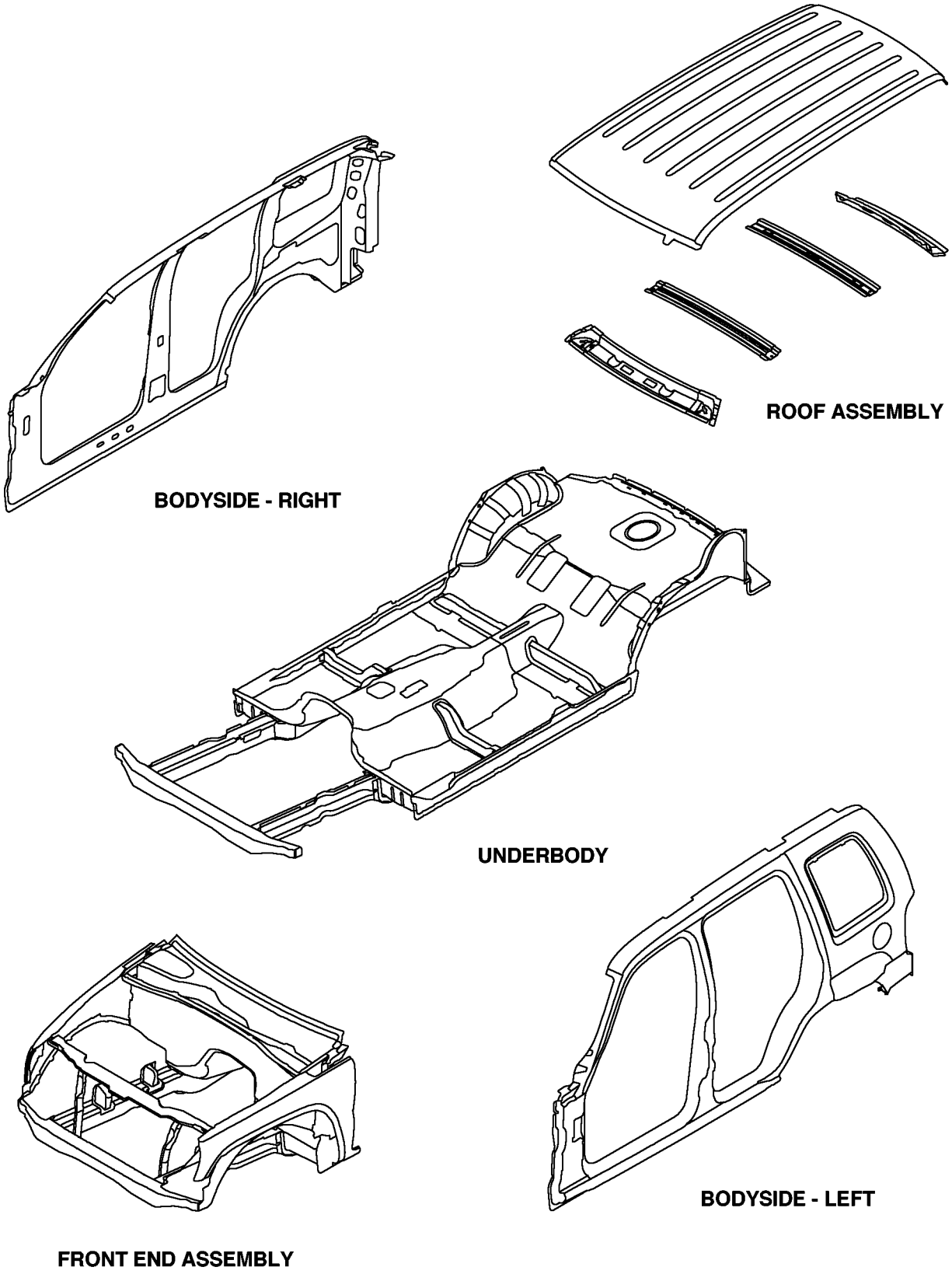

Fig. 2 BODY STRUCTURE - SECTIONS

WELD AND STRUCTURAL ADHESIVE LOCATIONS

SPECIFICATIONS

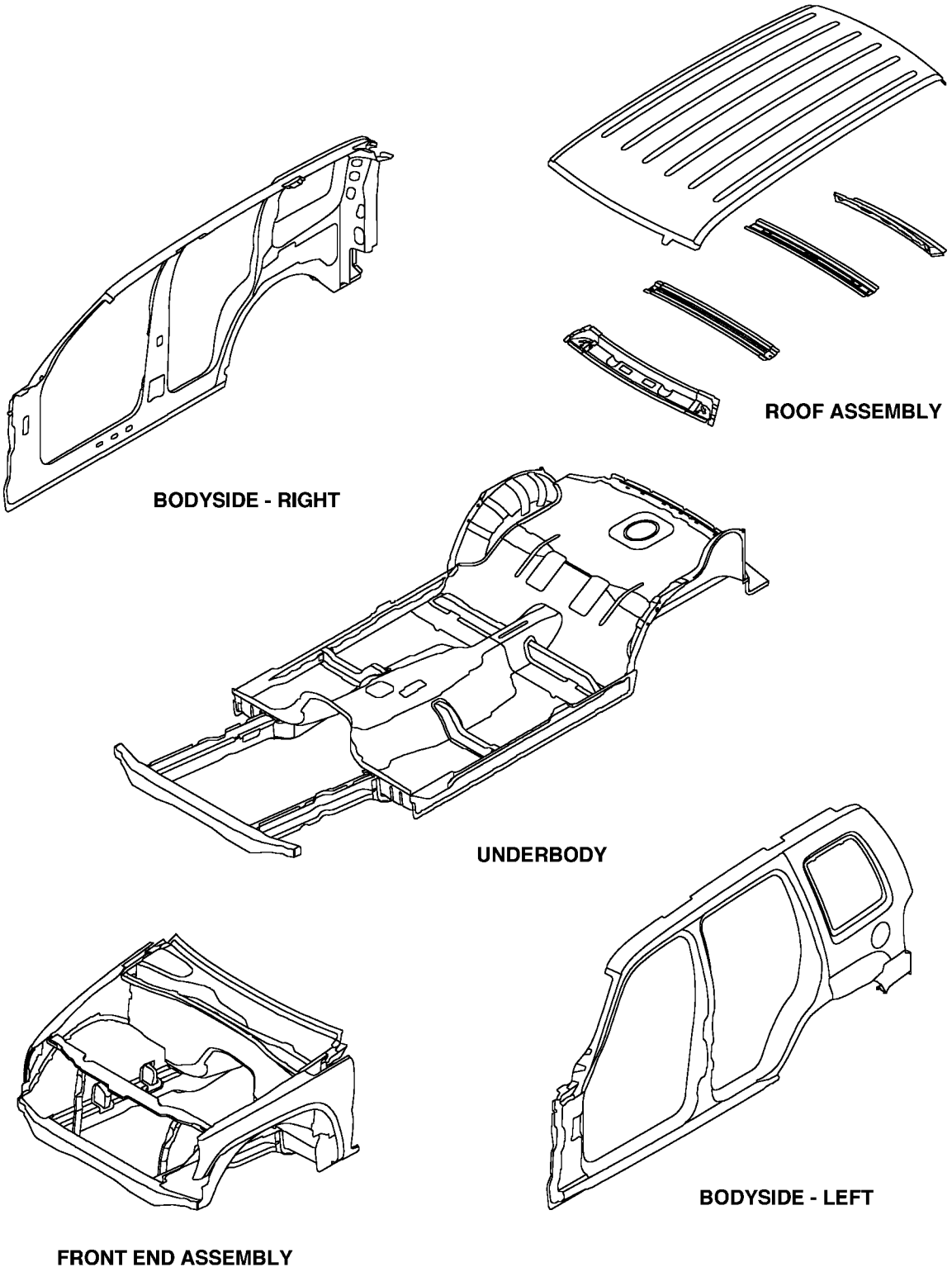

Fig. 3 BODY IN WHITE - SECTIONS

WELD AND STRUCTURAL ADHESIVE LOCATIONS (Continued)

INDEX

DESCRIPTION	FIGURE
FRONT END ASSEMBLY	
INNER FRONT PANELS	(4)
INNER WHEELHOUSE ASSEMBLIES	(5)
INNER WHEEL HOUSES & LOWER REINFORCEMENTS	(6)
FRONT BUMPER CROSSMEMBER ASSEMBLY	(7)
INNER FRONT WHEELHOUSE ASSEMBLY	(8)
FRONT INNER RAIL ASSEMBLY	(9)
FRONT INNER RAILS AND BRACKET WELD POINTS	(10)
FRONT INNER RAILS AND BRACKET WELD POINTS	(11)
FRONT OUTER RAIL & TORQUE BOX	(12)
FRONT OUTER RAIL ASSEMBLIES	(13)
FRONT OUTER RAILS AND BRACKET WELD POINTS	(14)
INNER FRONT WHEELHOUSE ASSEMBLY - COMPLETE	(15)
INNER FRONT WHEELHOUSE TO RAILS	(16)
COWL SIDE PANEL ASSEMBLIES	(17)
PLENUM ASSEMBLY	(18)
PLENUM BAFFLE & PLENUM CLOSURE PANEL	(19)
PLENUM BAFFLE & STEERING COLUMN REINFORCEMENT	(20)
FRONT END ASSEMBLY/UNDERBODY	
FLOOR PAN ASSEMBLY	(21)
FLOOR PAN AND DASH PANEL	(22)
DASH PANEL AND PLENUM	(23)
WHEELHOUSE, FLOOR PAN, DASH PANEL AND PLENUM ASSEMBLY	(24)
COWL SIDE PANEL	(25)
REAR FRAME RAILS	
REAR FRAME RAIL ASSEMBLY	(26)
REAR CONTROL ARM AND SHOCK MOUNTING BRACKETS	(27)
REAR SPRING MOUNTING BRACKETS AND REINFORCEMENTS	(28)
REAR SPRING REINFORCEMENTS, SHOCK MOUNTING, FUEL PASS AND EXHAUST HANGER BRACKET	(29)
REAR WHEELHOUSE ASSEMBLIES	(30)
FRONT AND REAR RAIL REINFORCEMENTS	(31)
REAR FLOOR PAN ASSEMBLY	
REAR FLOOR PAN, COMPRESSION AND ANCHOR PLATE ASSEMBLY	(32)
SWING GATE AND BUMPER REINFORCEMENT	(33)
FLOOR PAN AND REAR RAIL ASSEMBLIES	(34)
FLOOR PAN AND REAR RAIL ADHESIVE LOCATIONS	(35)
FLOOR PAN AND REAR RAIL WELD LOCATIONS	(36)
REAR FLOOR PAN, CROSSMEMBERS AND FUEL TANK REINFORCEMENTS	(38)

WELD AND STRUCTURAL ADHESIVE LOCATIONS (Continued)

DESCRIPTION	FIGURE
FULL FLOOR PAN ASSEMBLY	
FULL FLOOR PAN ASSEMBLIES	(39)
FLOOR PAN AND RAIL ASSEMBLY ADHESIVE LOCATIONS	(40)
FLOOR PAN AND RAIL ASSEMBLY WELD LOCATIONS	(41)
FLOOR PAN, BODY SIDE SILL, COWL SIDE PANEL AND CROSSMEMBERS	(42)
WHEELHOUSE ADHESIVE LOCATIONS	(43)
WHEELHOUSE WELD LOCATIONS	(44)
BODY SIDE PANELS AND SUB ASSEMBLIES	
A-PILLAR AND HEADER MOUNTING REINFORCEMENTS	(45)
B-PILLAR REINFORCEMENTS	(46)
C-PILLAR AND SEAT BACK MOUNTING REINFORCEMENTS	(47)
D-PILLAR REINFORCEMENTS	(48)
TAIL LAMP MOUNTING PANEL AND GATE STRIKER REINFORCEMENT	(49)
TAIL LAMP MOUNTING PANEL AND TAIL LAMP EXTENSION	(50)
SWING GATE OPENING PANEL AND ROOF HEADER	(51)
BODY SIDE PANELS	
BODY SIDE PANEL ASSEMBLY	(52)
BODY SIDE OUTER, INNER FENDER REINFORCEMENT AND FENDER ASSEMBLY	(53)
BODY SIDE OUTER AND INNER PANELS; A-PILLAR	(54)
LOWER INNER BODY SIDE PANELS AND UPPER A-PILLARS	(55)
BODY SIDE PANEL ASSEMBLIES AND B-PILLAR.	(56)
BODY SIDE PANEL ASSEMBLIES AND C-PILLAR REINFORCEMENT	(57)
QUARTER WINDOW OPENING; SEAT BACK ATTACH REINFORCEMENT; C-PILLAR REINFORCEMENT	(58)
BODY SIDE PANEL ASSEMBLIES AND OUTER REAR WHEELHOUSES	(59)
OUTER REAR WHEELHOUSE WELDS AND ADHESIVE LOCATIONS	(60)
D-PILLAR AND TAIL LAMP ASSEMBLY WELD AND ADHESIVE LOCATIONS	(61)
SWING GATE STRIKER REINFORCEMENT WELDS AND ADHESIVE LOCATIONS	(62)
REAR WHEELHOUSE WELDS AND TAIL LAMP ADHESIVE LOCATIONS	(63)
FENDER ASSEMBLIES	
INNER FENDER REINFORCEMENT AND GUSSETS	(64)
INNER FENDER REINFORCEMENT, GUSSETS, PLENUM AND WHEELHOUSES	(65)
INNER FENDER REINFORCEMENT AND WHEELHOUSES	(66)
PLENUM ASSEMBLY AND INNER SIDE PANELS	(67)
ROOF PANEL ASSEMBLIES	
ROOF PANEL ASSEMBLY	(68)
ROOF PANEL AND BODY SIDE WELD AND ADHESIVE LOCATIONS	(69)
ROOF PANEL AND BODY SIDE WELD AND ADHESIVE LOCATIONS - SUNROOF EQUIPPED	(70)
ROOF AND HEADER PANEL ASSEMBLY	(71)

WELD AND STRUCTURAL ADHESIVE LOCATIONS (Continued)

DESCRIPTION	FIGURE
BODY SIDE PANELS & FLOOR PAN ASSEMBLIES	
BODY SIDE PANEL AND FLOOR PAN ASSEMBLIES	(72)
BODY SIDE SILLS AND REAR WHEELHOUSES	(73)
ROOF HEADER AND WHEELHOUSE WELDS AND ADHESIVE LOCATIONS	(74)
SWING GATE OPENING PANEL; GATE STRIKER REINFORCEMENT; D-PILLAR REINFORCEMENT ADHESIVE AND WELD LOCATIONS	(75)
SWING GATE OPENING PANEL; D-PILLAR LOWER TO FLOOR GUSSET; GATE OPENING REINFORCEMENT	(76)
REAR FLOOR PAN AND CROSSMEMBER; TAIL LAMP MOUNTING; SWING GATE OPENING PANEL;	(77)

WELD AND STRUCTURAL ADHESIVE LOCATIONS (Continued)

FRONT END ASSEMBLY

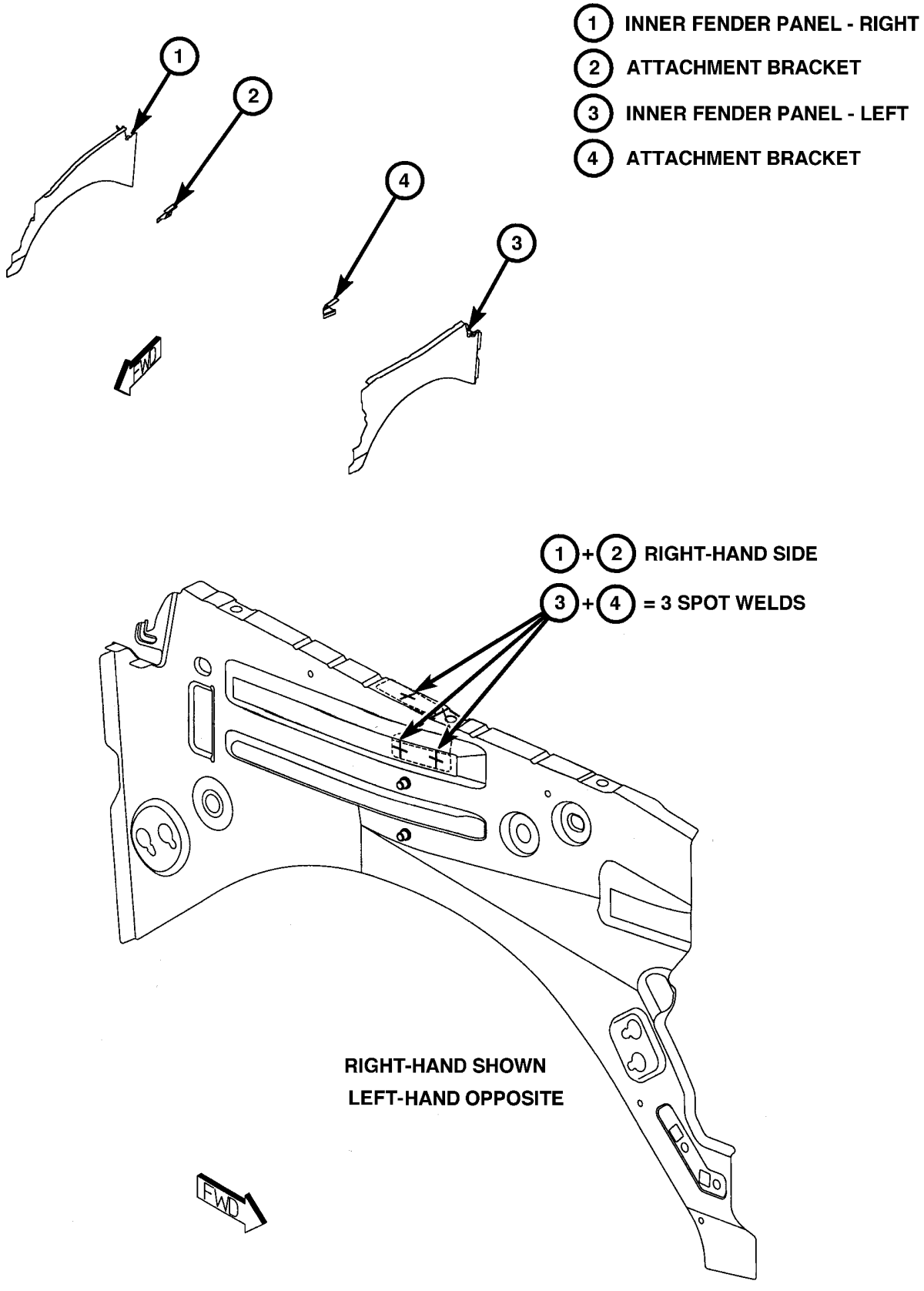

Fig. 4 001 INNER FRONT PANELS

WELD AND STRUCTURAL ADHESIVE LOCATIONS (Continued)

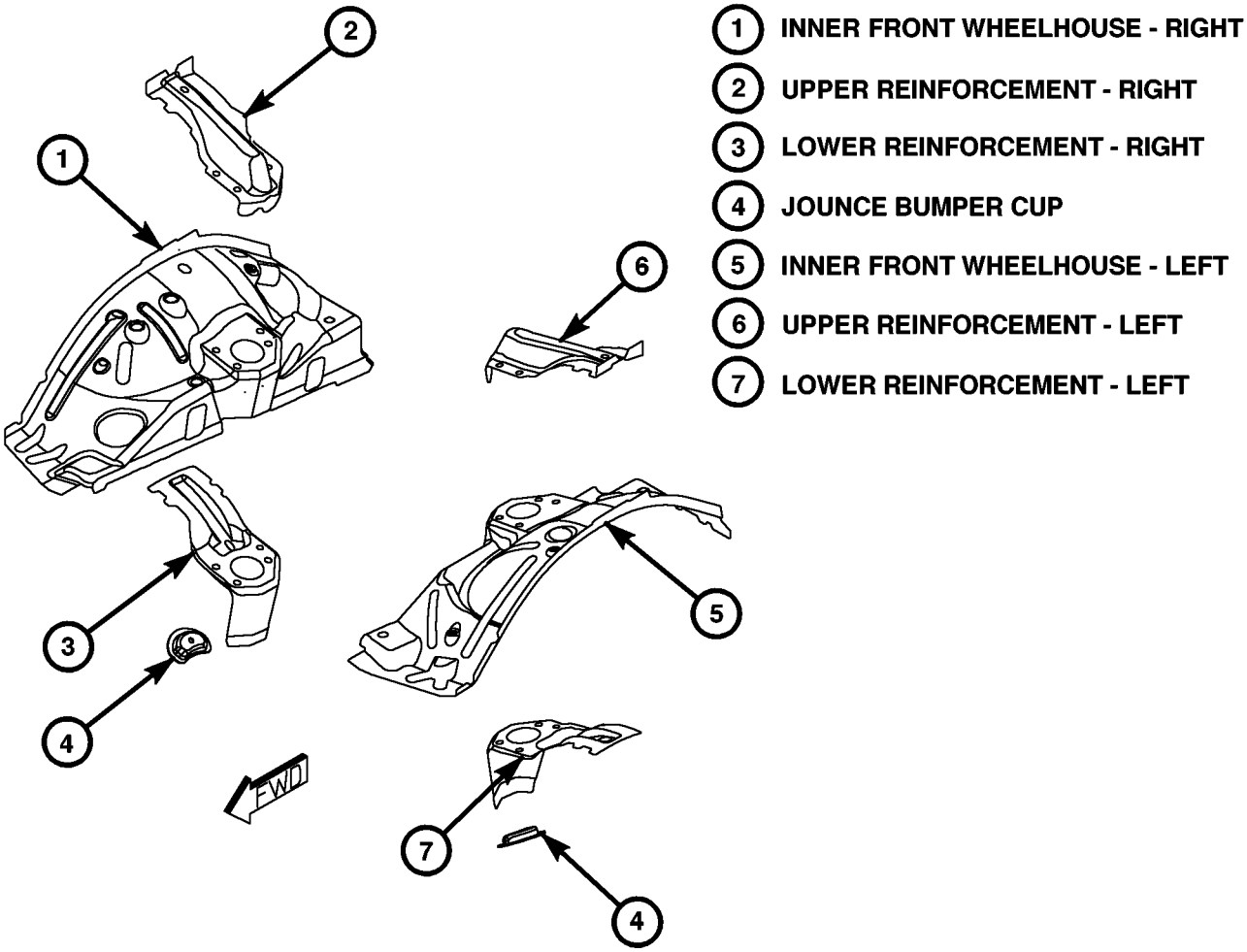

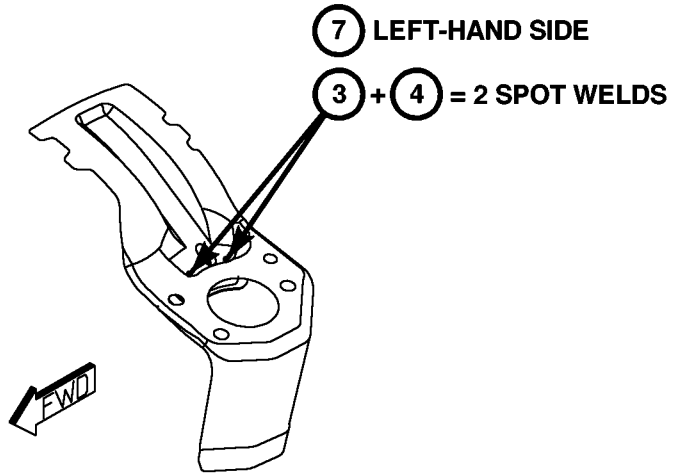

RIGHT-HAND SHOWN
LEFT-HAND OPPOSITE

Fig. 5 INNER WHEEL HOUSES

WELD AND STRUCTURAL ADHESIVE LOCATIONS (Continued)

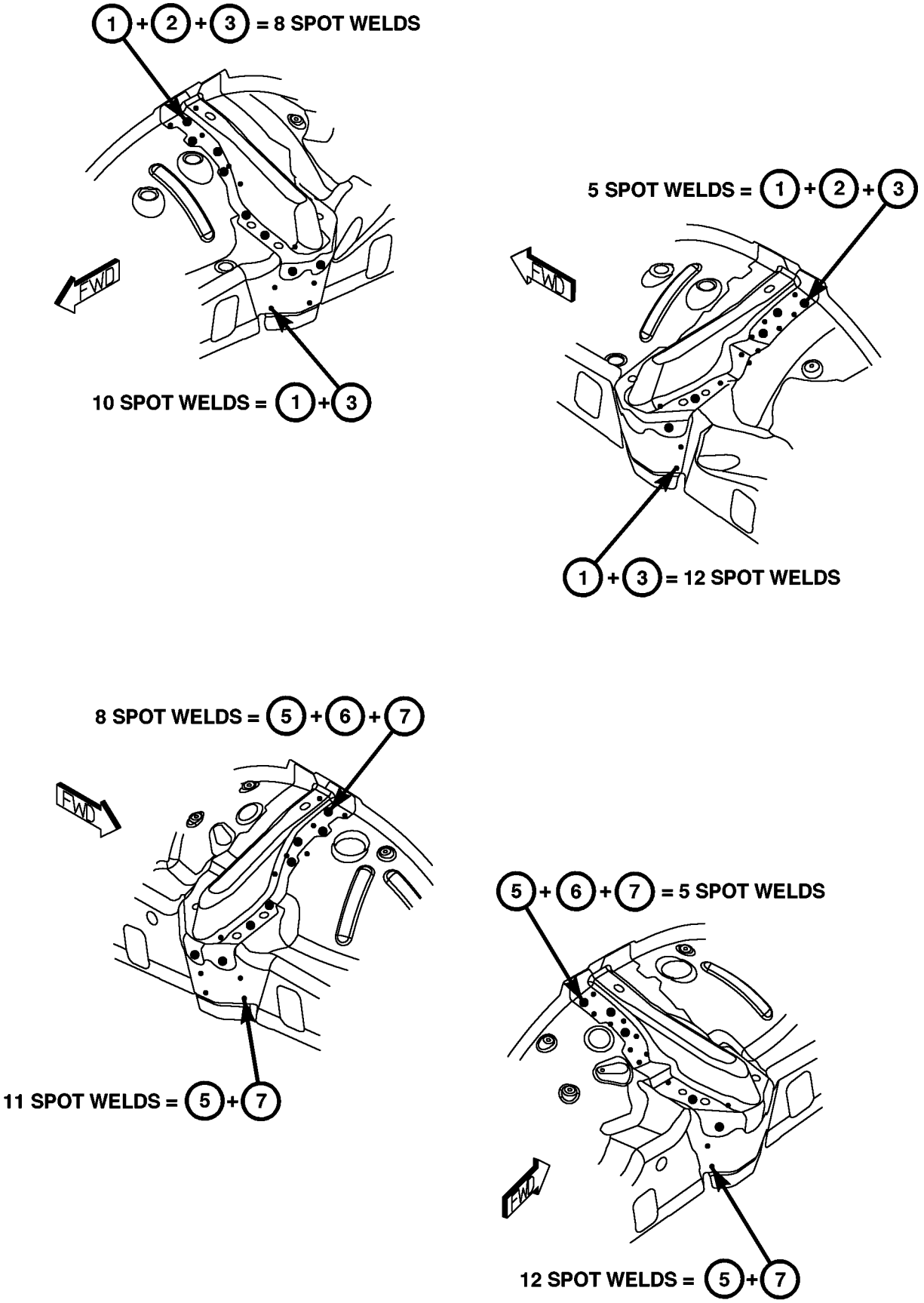

Fig. 6 INNER WHEEL HOUSES

WELD AND STRUCTURAL ADHESIVE LOCATIONS (Continued)

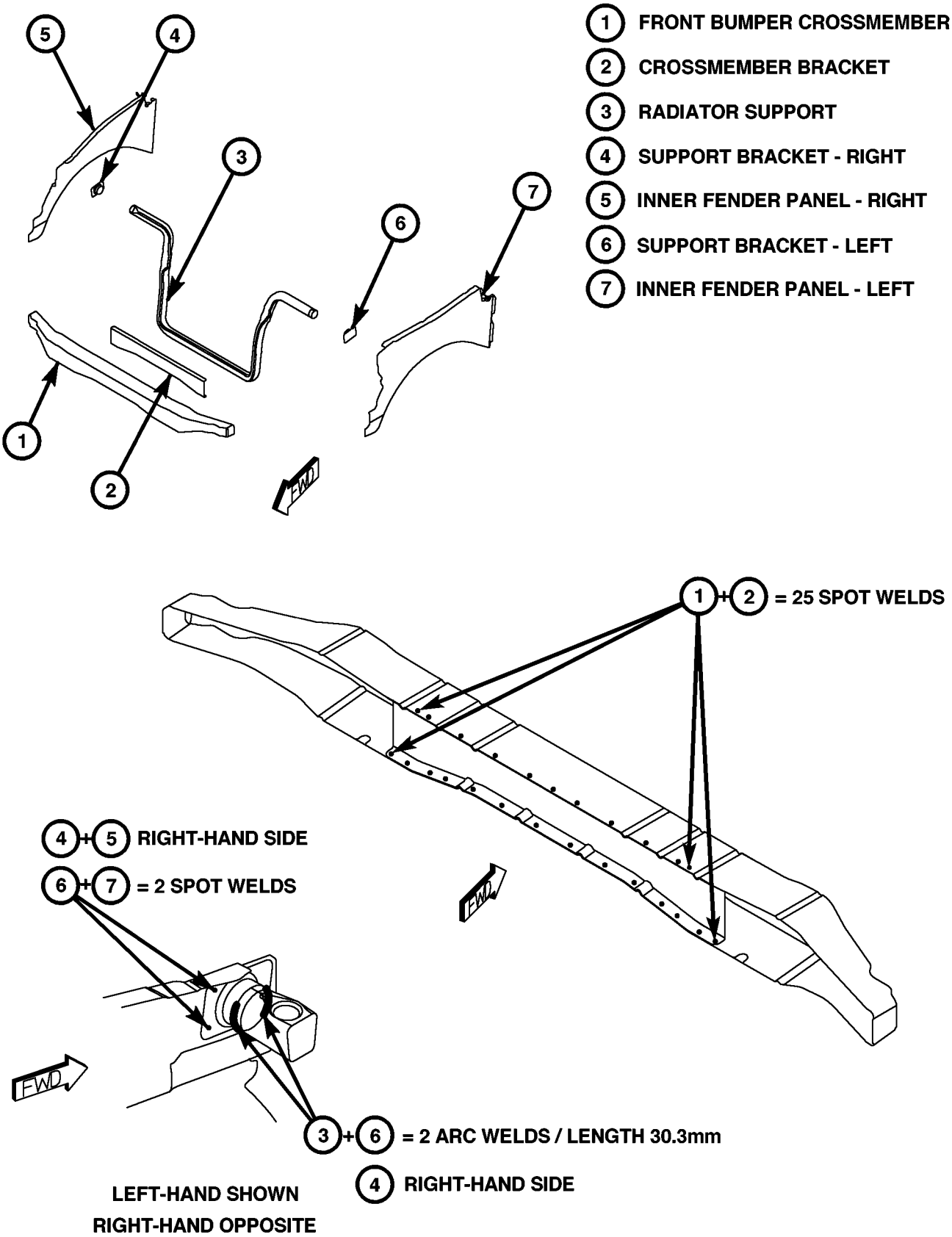

80fbf52e

Fig. 7 FRONT BUMPER CROSSMEMBER

WELD AND STRUCTURAL ADHESIVE LOCATIONS (Continued)

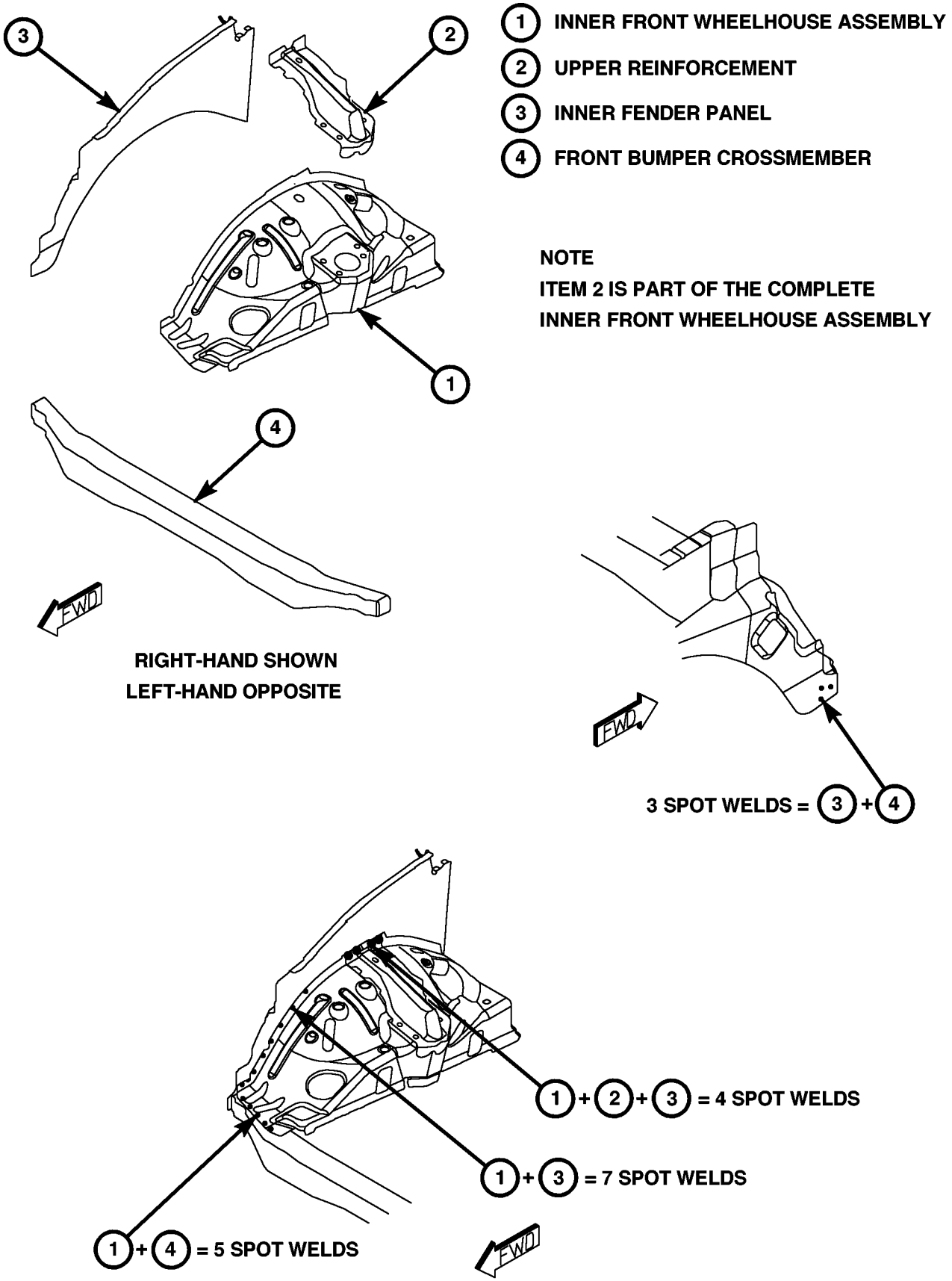

Fig. 8 INNER FRONT WHEELHOUSE

WELD AND STRUCTURAL ADHESIVE LOCATIONS (Continued)

1. FRONT INNER RAIL
2. TIP REINFORCEMENT
3. U-CHANNEL REINFORCEMENT
4. FRONT RAIL TO CROSSMEMBER BRACKET
5. RAD SUPPORT AND RAIL BRACKET
6. MOUNTING BRACKET
7. REINFORCEMENT PLATE
8. ATTACHMENT BRACKET
9. ATTACHMENT BRACKET GUSSET
10. TAPPING PLATE
11. CRUSH TUBE SPACER
12. CLOSEOUT SPACER BRACKET
13. REAR SPACER BRACKET

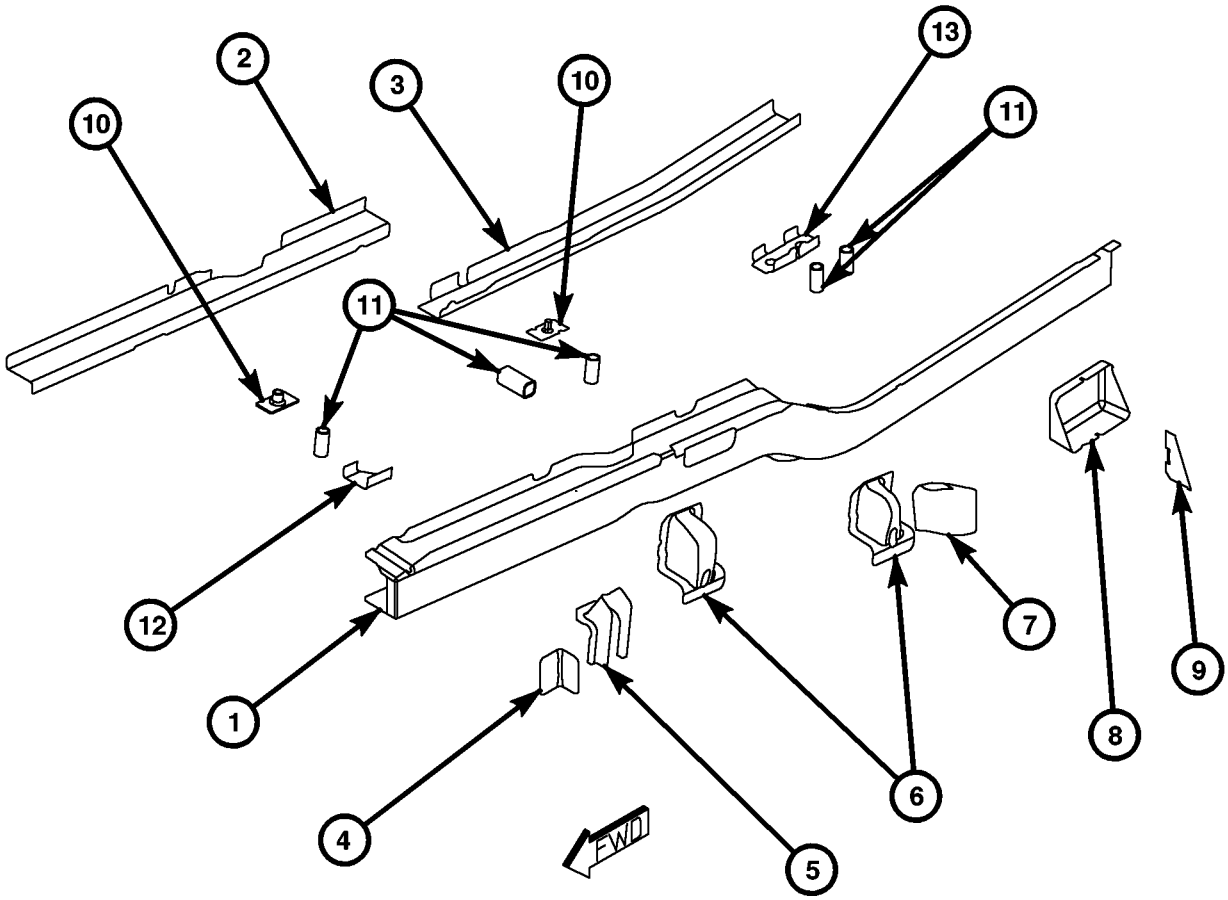

RIGHT-HAND SHOWN
LEFT-HAND OPPOSITE UNLESS SHOWN

Fig. 9 FRONT INNER RAILS

WELD AND STRUCTURAL ADHESIVE LOCATIONS (Continued)

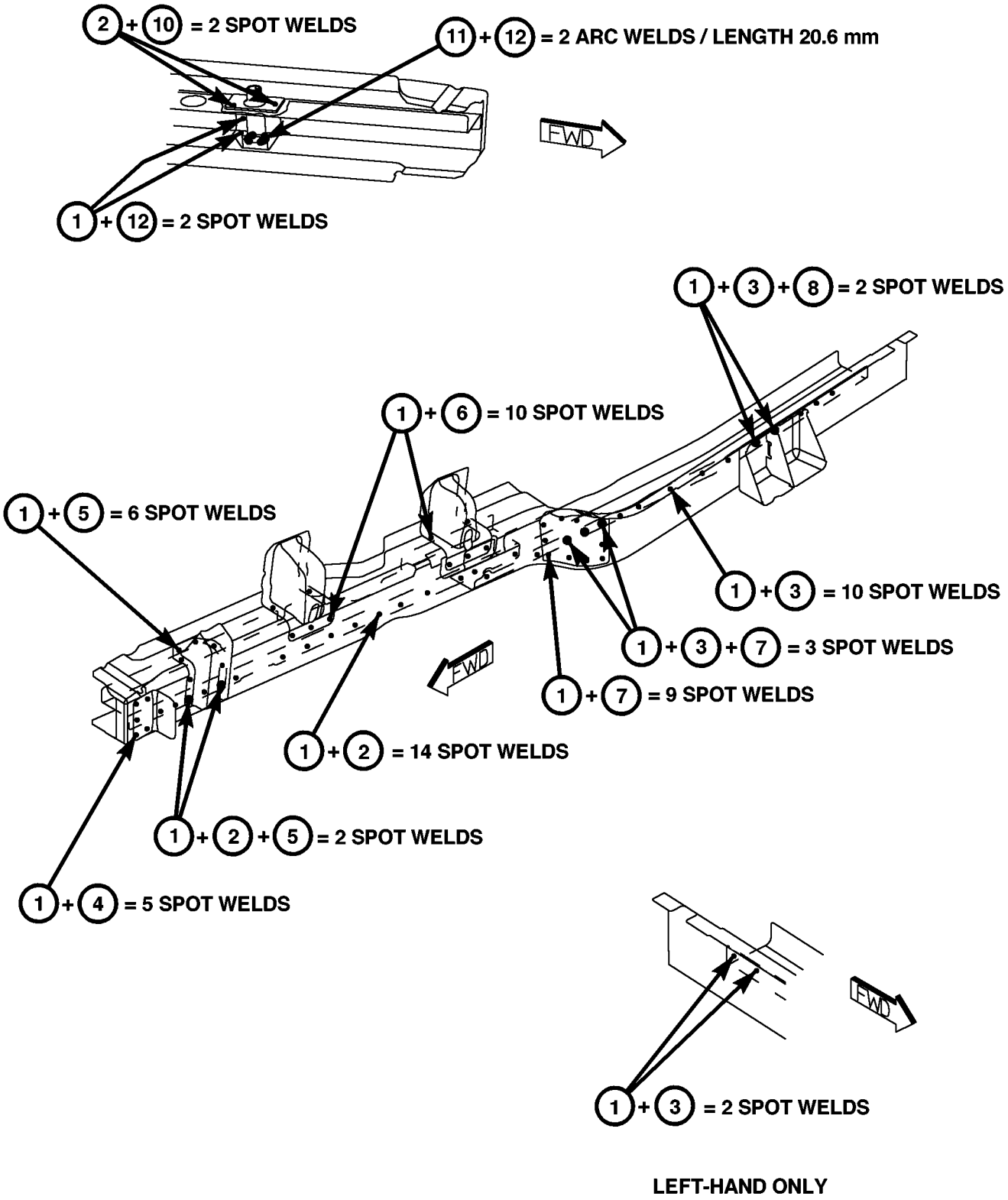

Fig. 10 FRONT INNER RAILS

WELD AND STRUCTURAL ADHESIVE LOCATIONS (Continued)

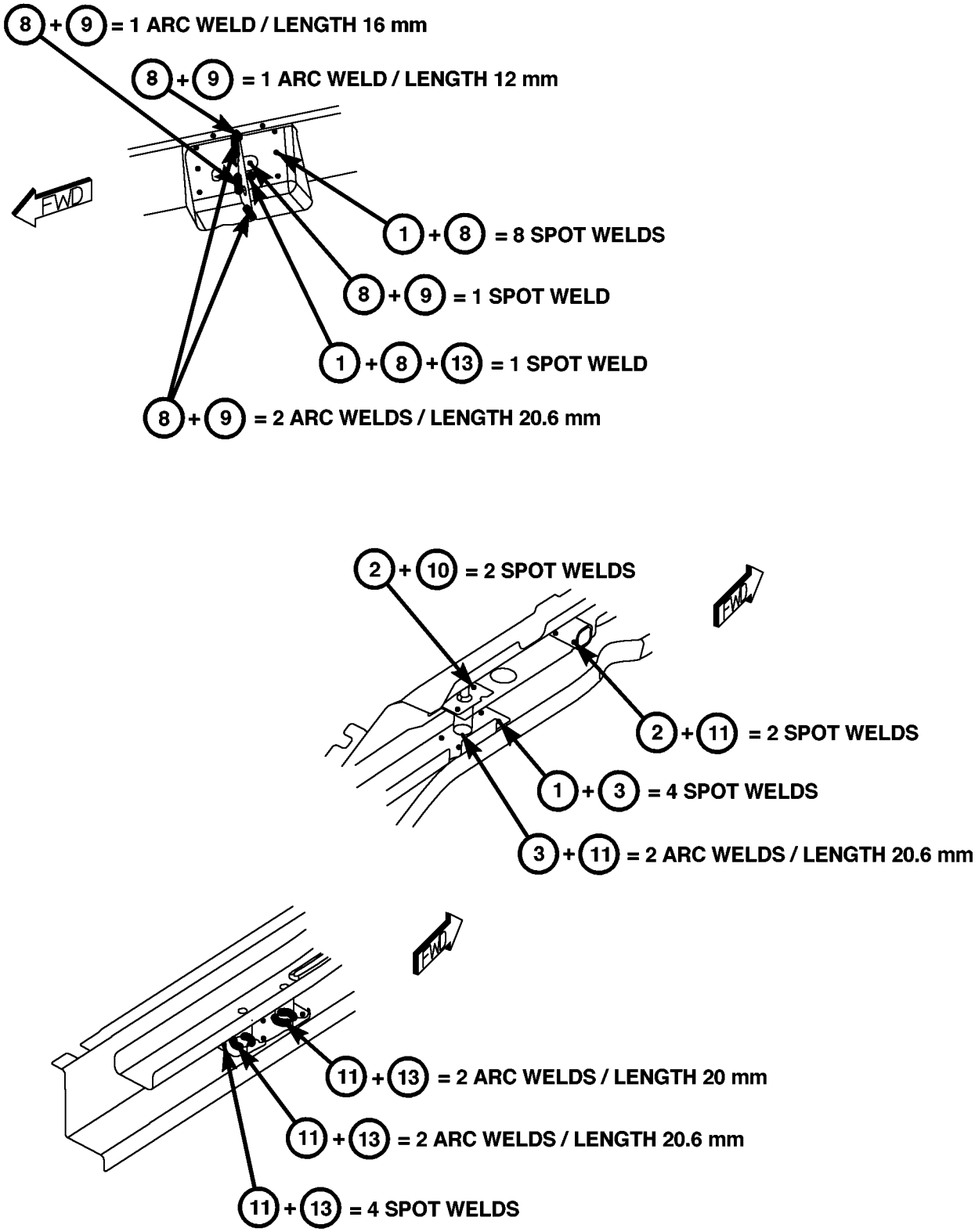

Fig. 11 FRONT INNER RAILS

WELD AND STRUCTURAL ADHESIVE LOCATIONS (Continued)

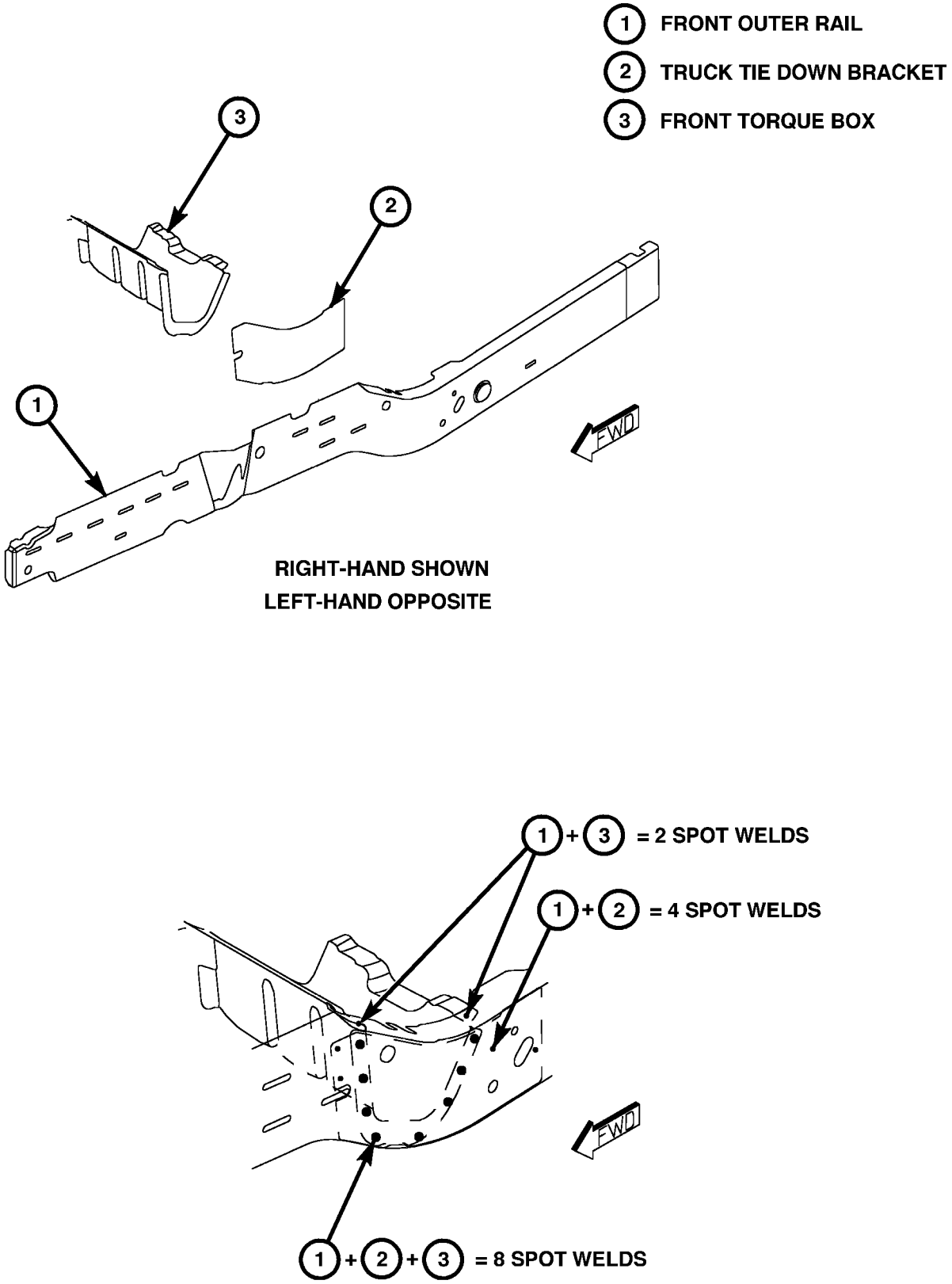

80ca5b6b

Fig. 12 002 FRONT OUTER RAIL

WELD AND STRUCTURAL ADHESIVE LOCATIONS (Continued)

1. FRONT OUTER RAIL ASSEMBLY
2. FRONT INNER RAIL ASSEMBLY
3. FRONT FLOOR REINFORCEMENT PLATE
4. TRUCK TIE DOWN BRACKET
5. FRONT TORQUE BOX
6. TIP REINFORCEMENT
7. U-CHANNEL REINFORCEMENT
8. CLOSEOUT SPACER BRACKET
9. REAR SPACER BRACKET
10. MOUNTING BRACKET
11. REINFORCEMENT PLATE

NOTE
ITEMS 4,5 ARE PARTS OF THE FRONT OUTER RAIL ASSEMBLY
ITEMS 6,7,8,9,10 AND 11 ARE PARTS OF THE FRONT INNER RAIL ASSEMBLY

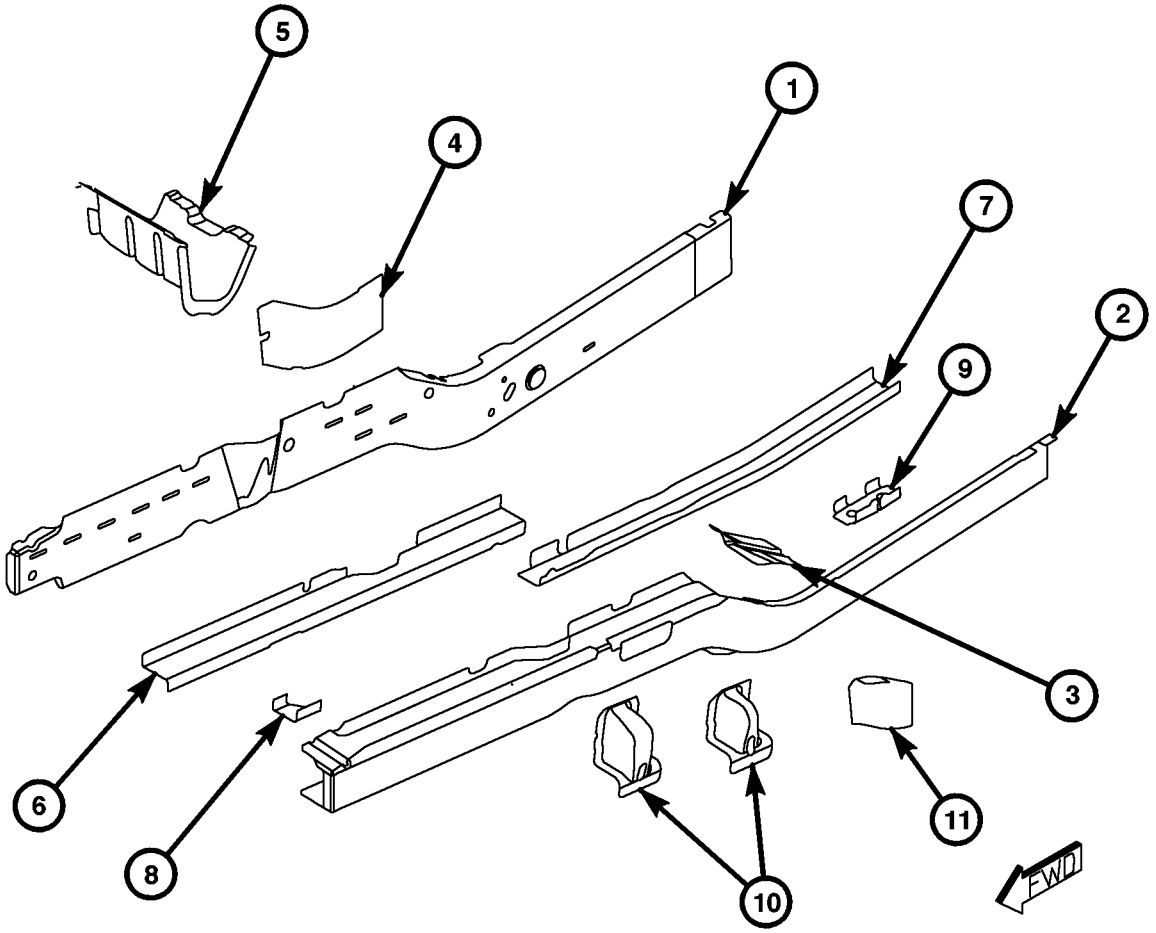

RIGHT-HAND SHOWN
LEFT-HAND OPPOSITE UNLESS SHOWN

Fig. 13 FRONT OUTER RAILS

WELD AND STRUCTURAL ADHESIVE LOCATIONS (Continued)

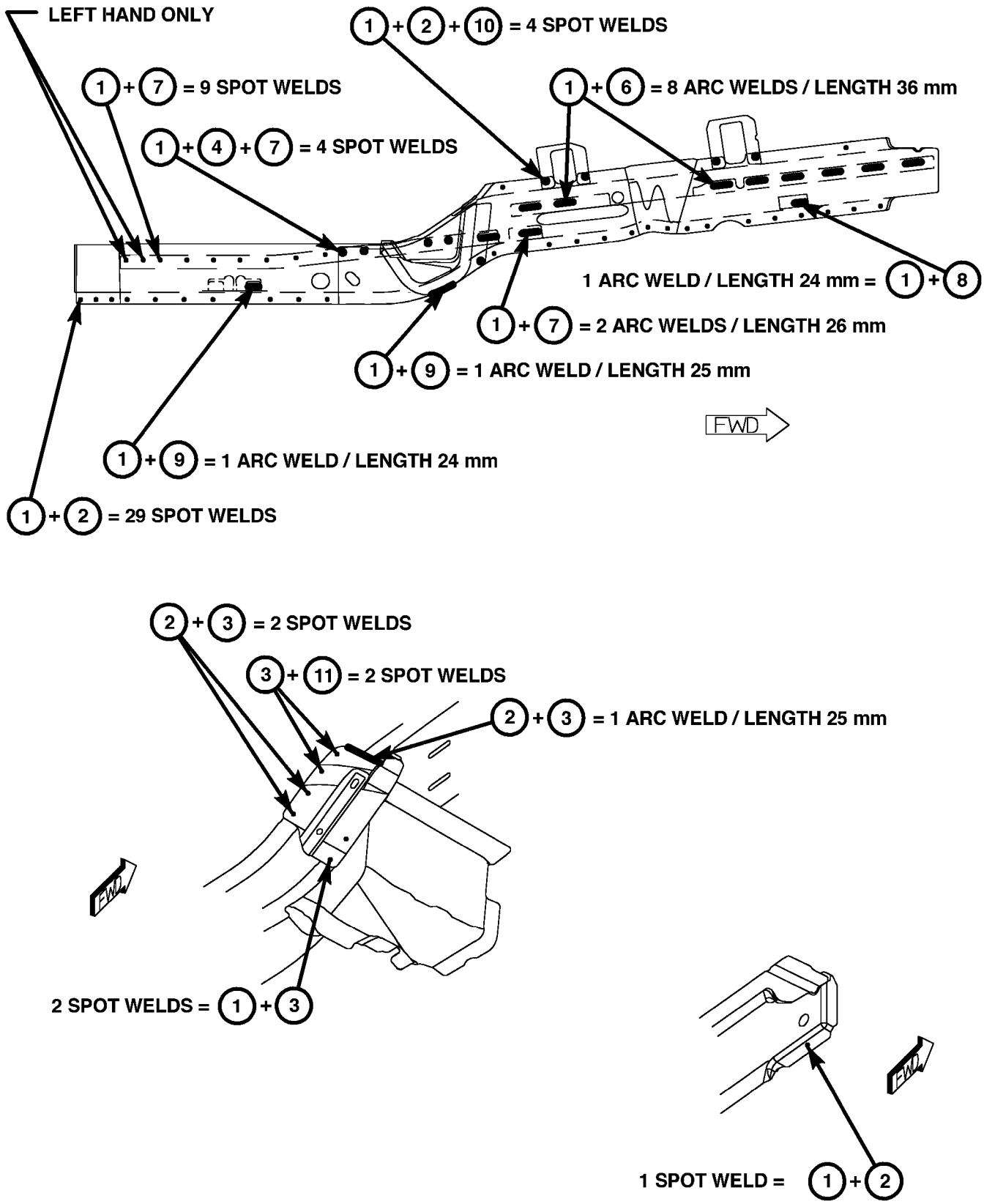

Fig. 14 003 FRONT OUTER RAILS

WELD AND STRUCTURAL ADHESIVE LOCATIONS (Continued)

1. INNER FRONT WHEELHOUSE
2. LOWER REINFORCEMENT
3. FRONT BUMPER CROSSMEMBER
4. FRONT INNER RAIL ASSEMBLY
5. FRONT OUTER RAIL ASSEMBLY
6. FRONT RAIL TO CROSSMEMBER BRACKET
7. MOUNTING BRACKET
8. CROSSMEMBER BRACKET

NOTE

ITEMS 4,5,6 AND 7 ARE PARTS OF THE COMPLETE FRONT RAIL ASSEMBLY

ITEM 2 IS PART OF THE COMPLETE INNER FRONT WHEELHOUSE ASSEMBLY

ITEM 8 IS PART OF THE COMPLETE FRONT BUMPER CROSSMEMBER ASSEMBLY

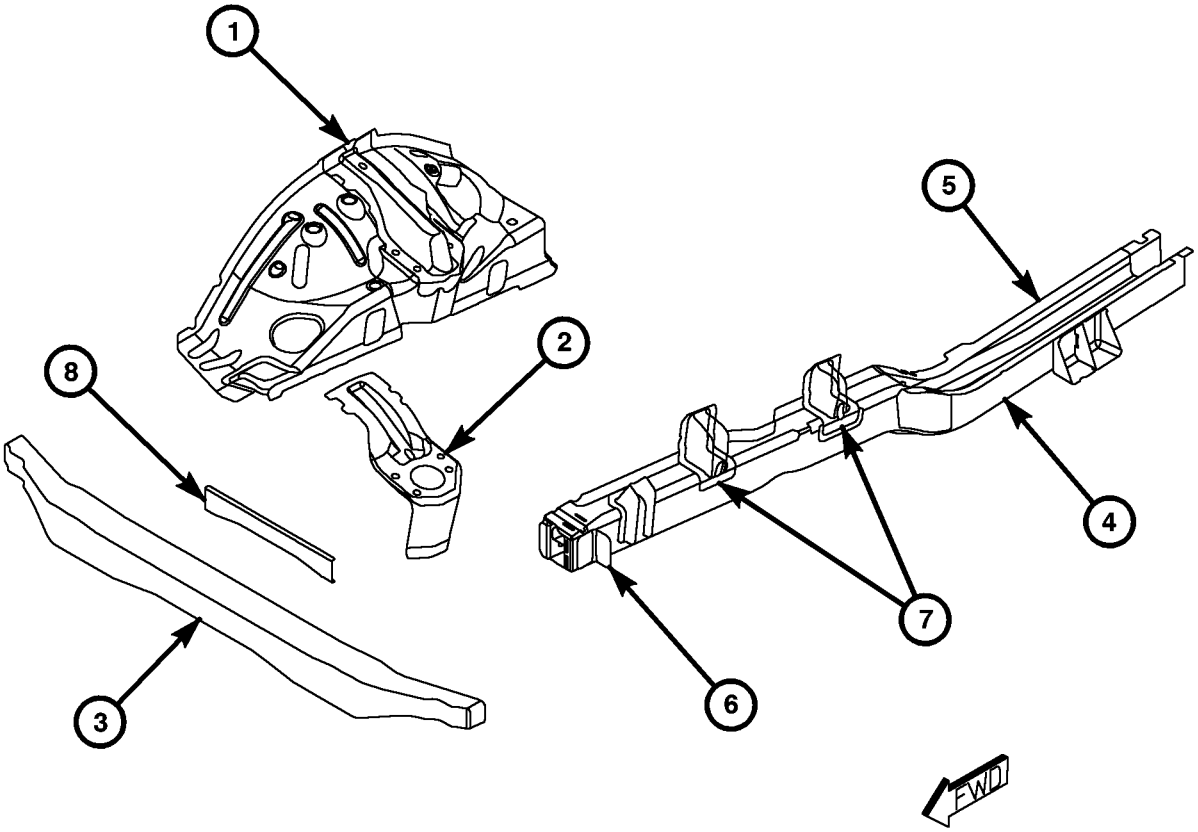

RIGHT-HAND SHOWN

LEFT-HAND OPPOSITE

Fig. 15 INNER FRONT WHEELHOUSE/FRONT INNER RAIL

WELD AND STRUCTURAL ADHESIVE LOCATIONS (Continued)

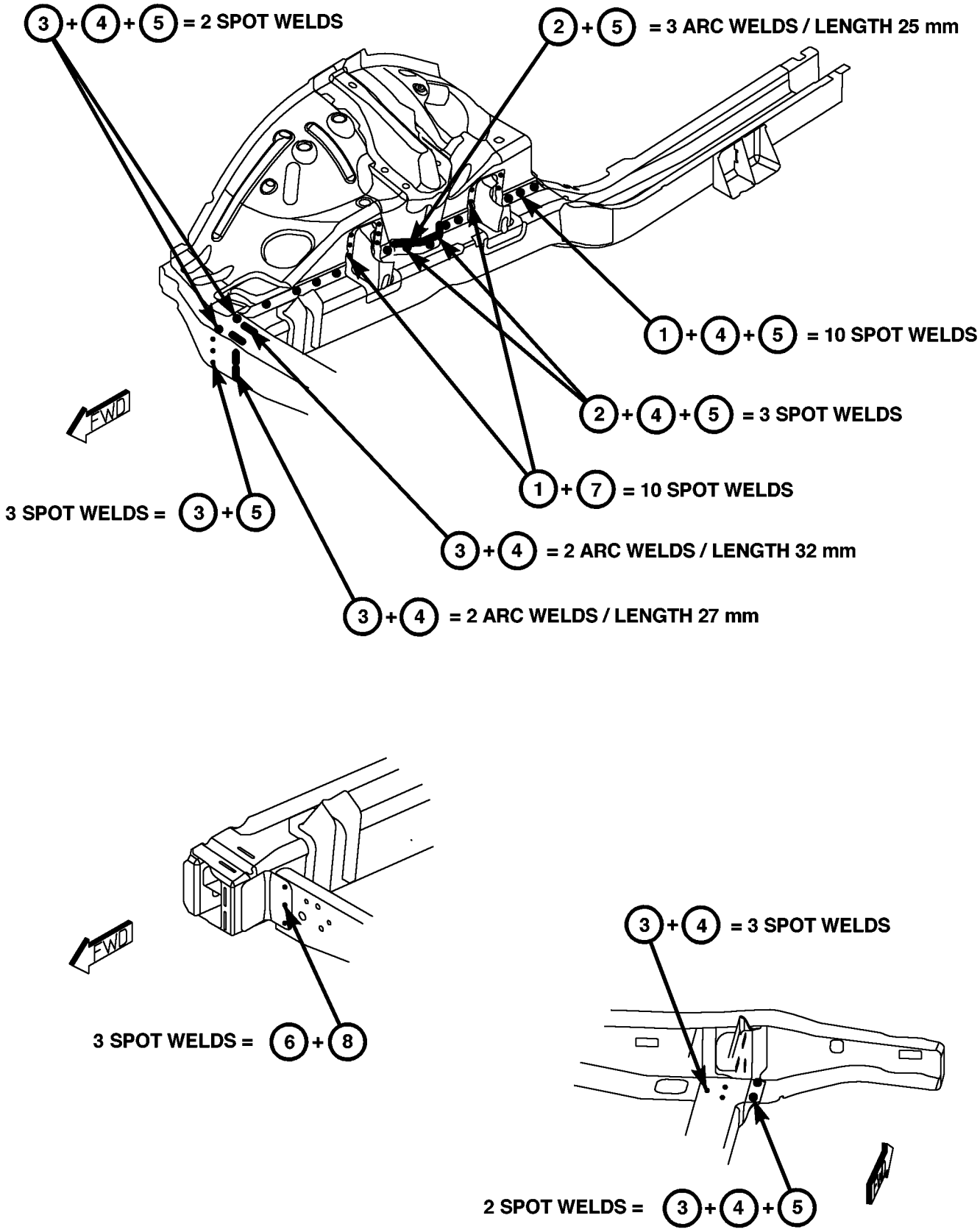

Fig. 16 INNER FRONT WHEELHOUSE/FRONT INNER RAIL

WELD AND STRUCTURAL ADHESIVE LOCATIONS (Continued)

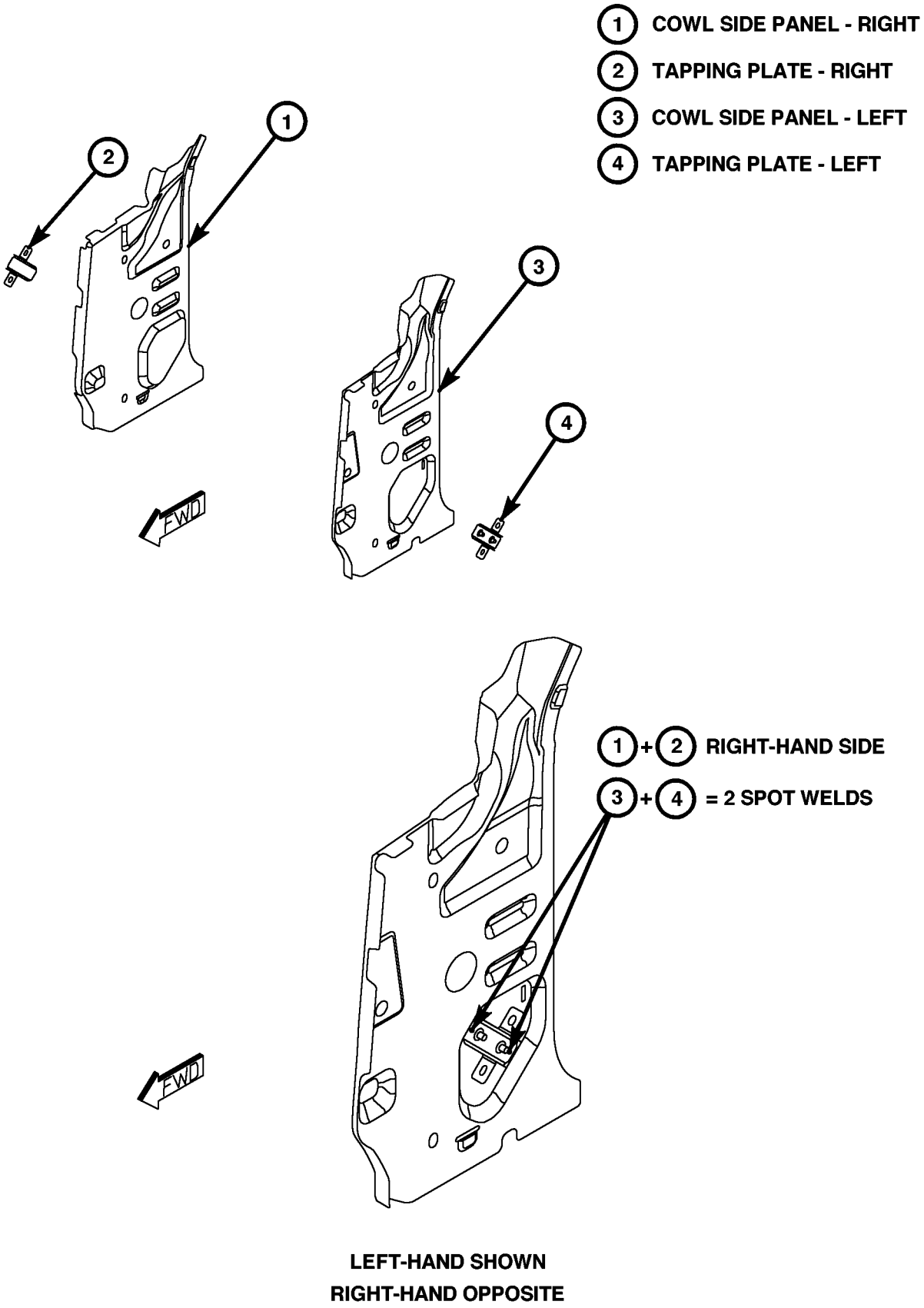

Fig. 17 COWL SIDE PANEL

WELD AND STRUCTURAL ADHESIVE LOCATIONS (Continued)

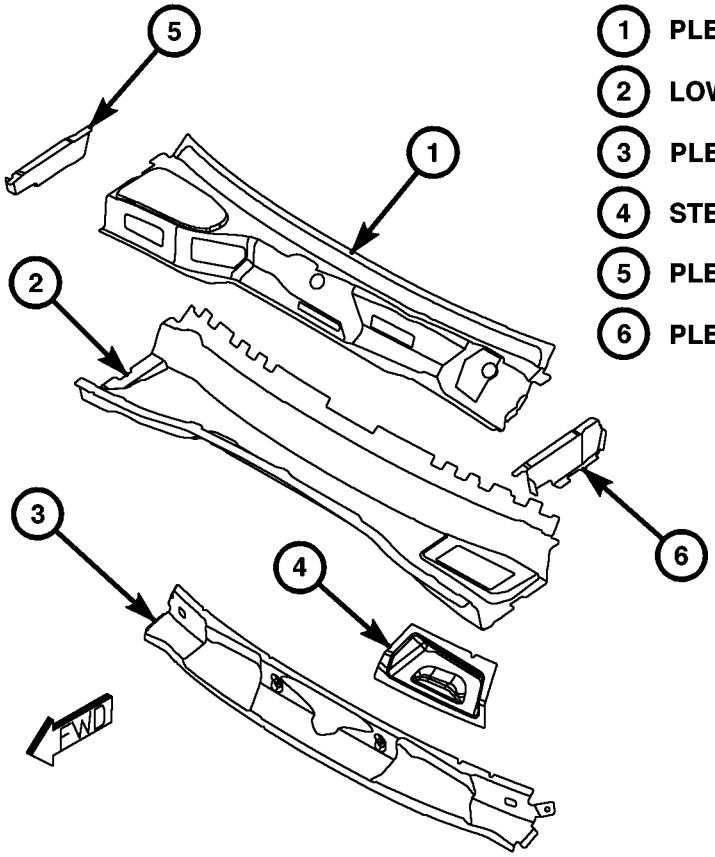

1 PLENUM BAFFLE PANEL
2 LOWER PLENUM PANEL
3 PLENUM PANEL
4 STEERING COLUMN MOUNTING REINFORCEMENT
5 PLENUM CLOSURE PANEL - RIGHT
6 PLENUM CLOSURE PANEL - LEFT

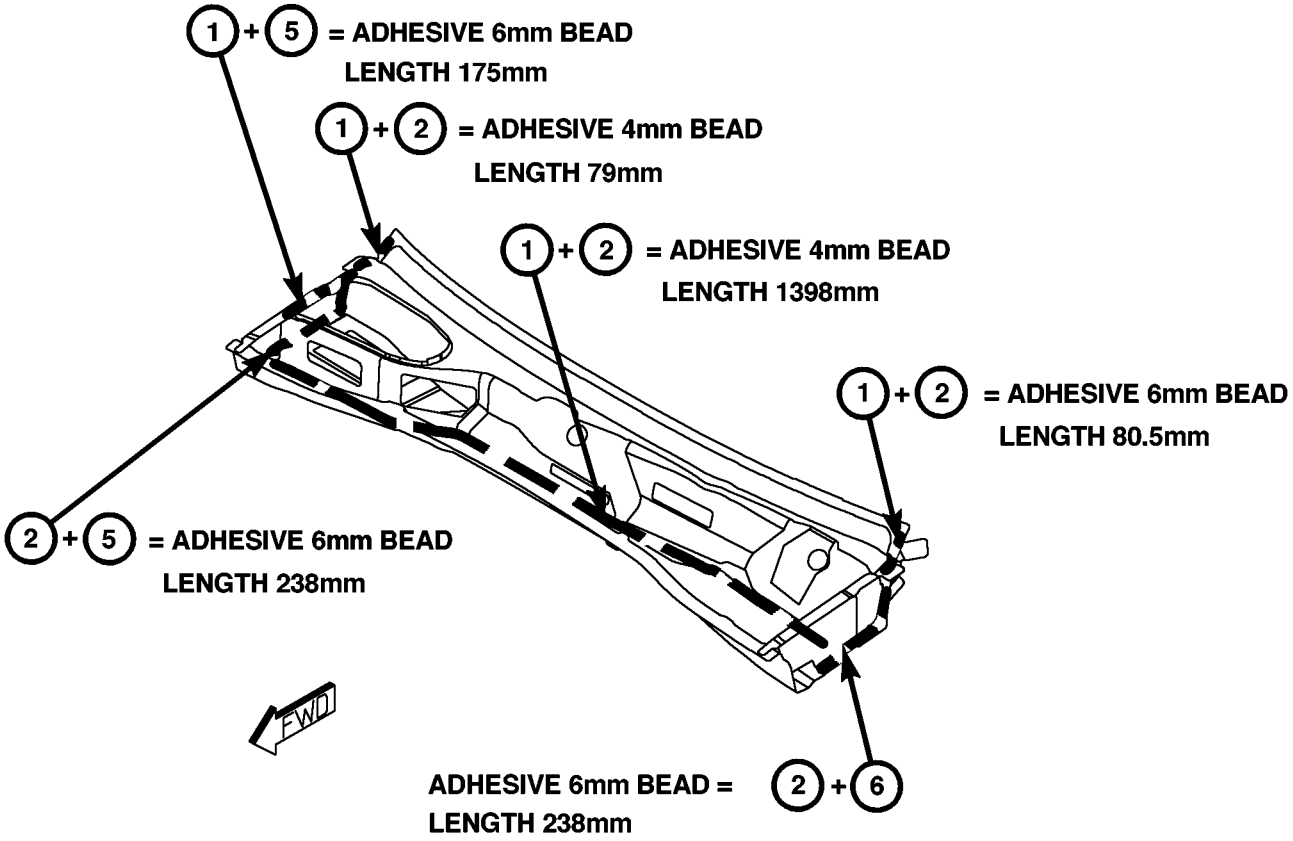

Fig. 18 PLENUM ASSEMBLY

WELD AND STRUCTURAL ADHESIVE LOCATIONS (Continued)

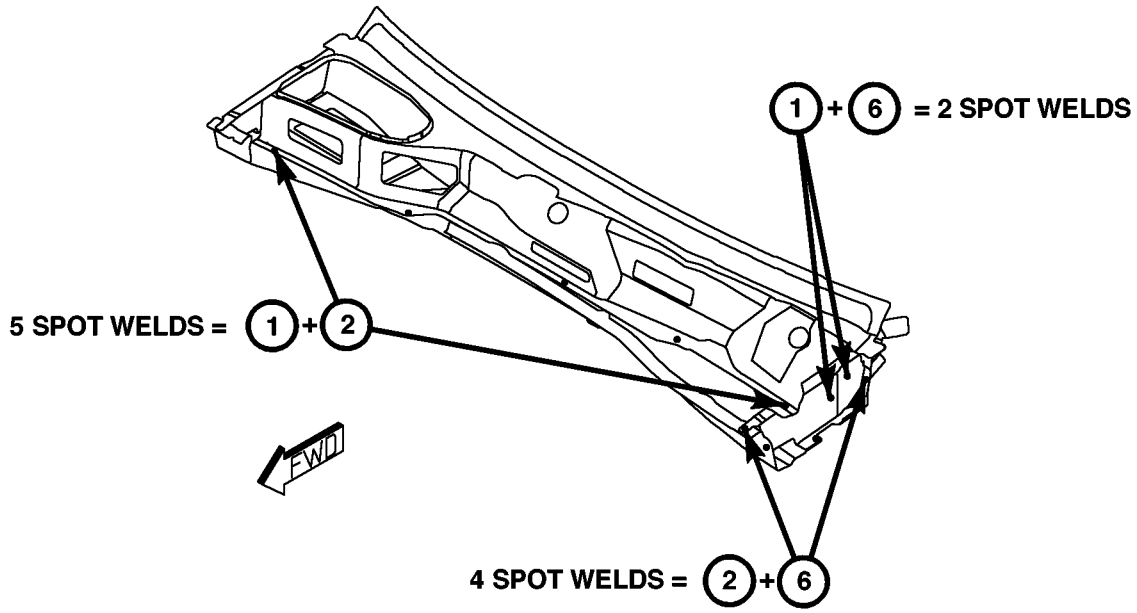

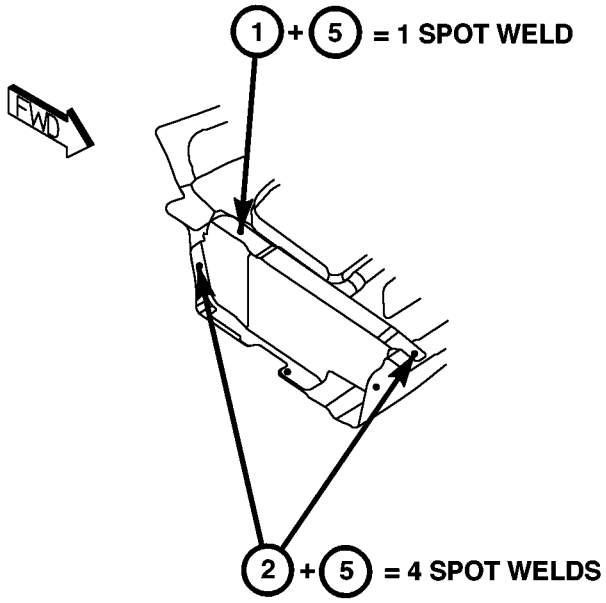

Fig. 19 PLENUM ASSEMBLY

WELD AND STRUCTURAL ADHESIVE LOCATIONS (Continued)

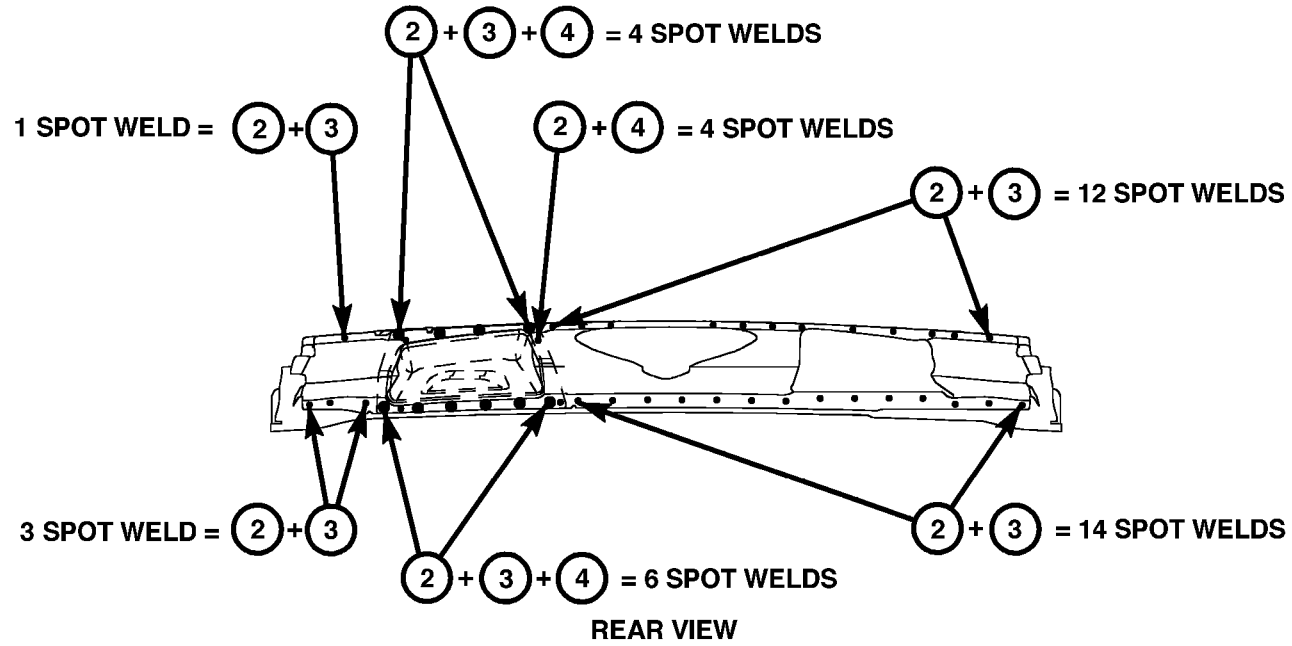

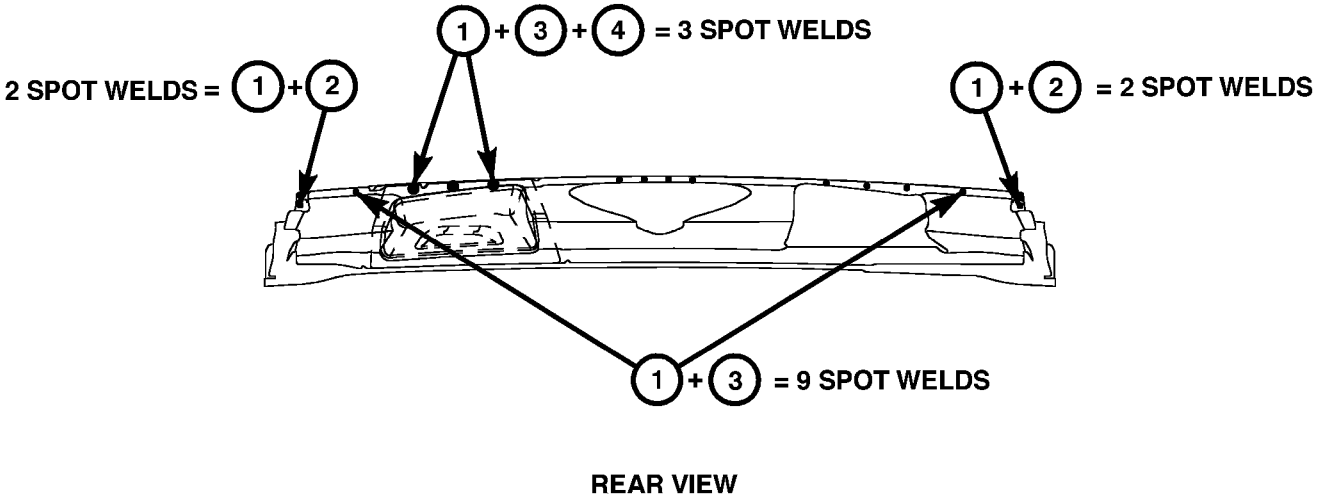

80cba4d6

Fig. 20 004 PLENUM ASSEMBLY

WELD AND STRUCTURAL ADHESIVE LOCATIONS (Continued)

FRONT END ASSEMBLY/UNDERBODY

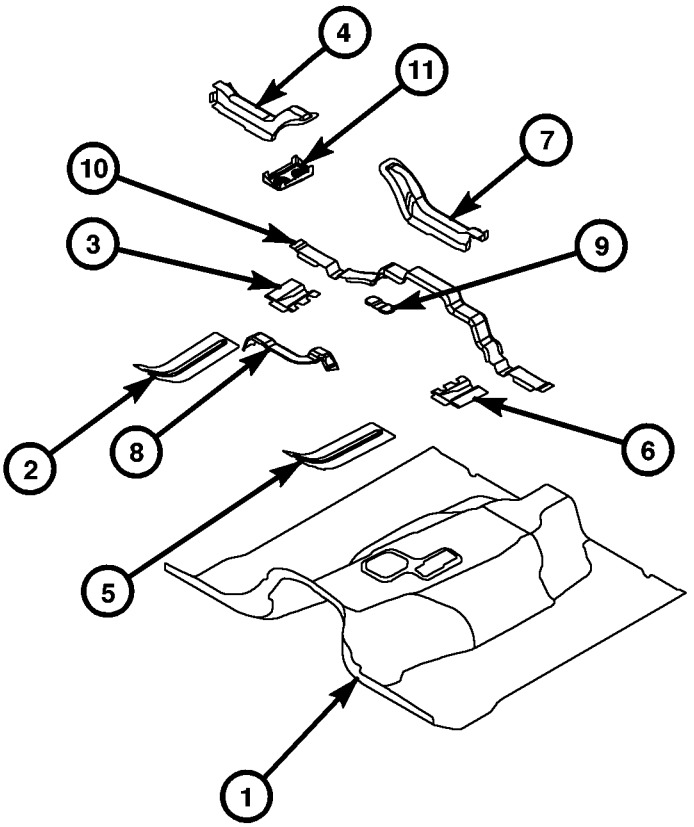

1. FRONT FLOOR PAN
2. FRONT COMPRESSION PLATE - RIGHT
3. REAR COMPRESSION PLATE - RIGHT
4. FRONT SEAT CROSSMEMBER - RIGHT
5. FRONT COMPRESSION PLATE - LEFT
6. REAR COMPRESSION PLATE - LEFT
7. FRONT SEAT CROSSMEMBER - LEFT
8. TUNNEL FRONT REINFORCEMENT
9. TUNNEL CENTER REINFORCEMENT
10. FRONT SEAT CROSSMEMBER
11. ACM MOUNTING BRACKET

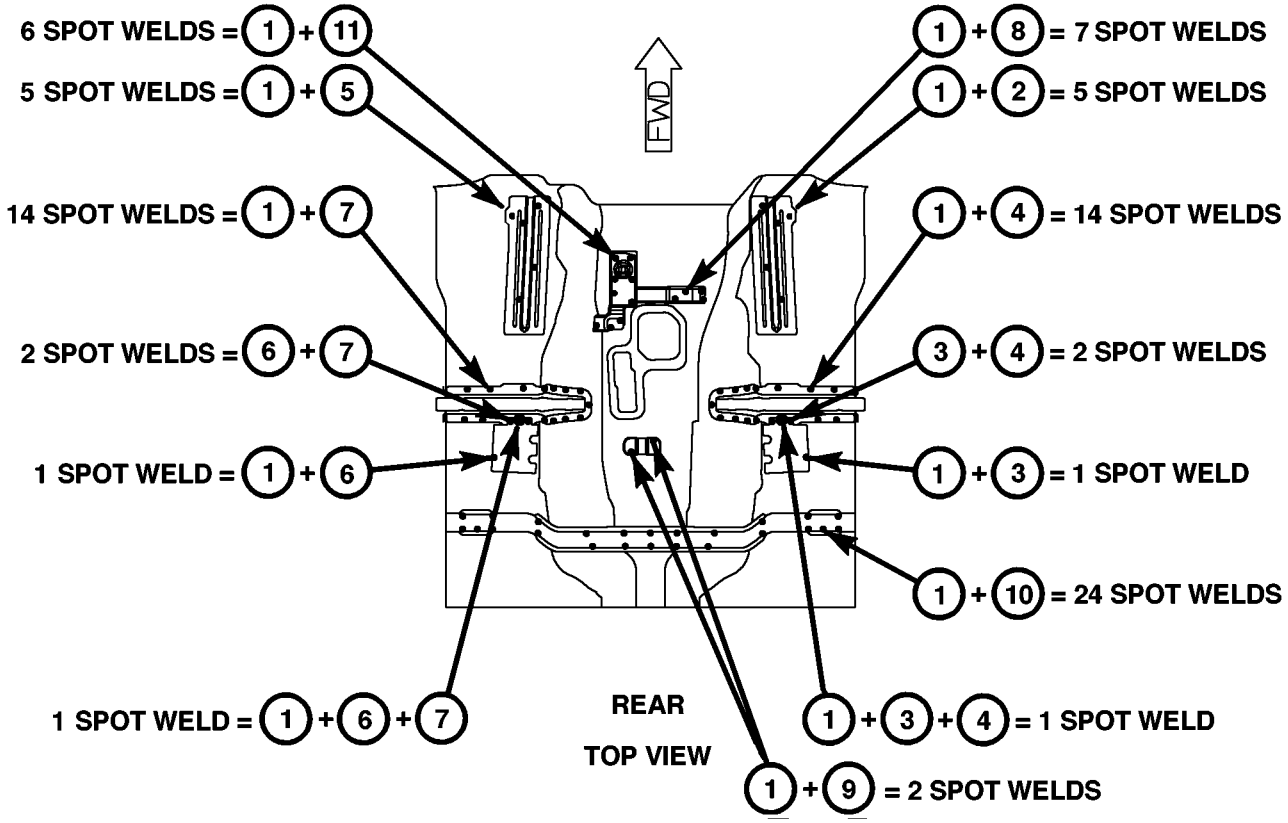

Fig. 21 FLOOR PAN ASSEMBLY

WELD AND STRUCTURAL ADHESIVE LOCATIONS (Continued)

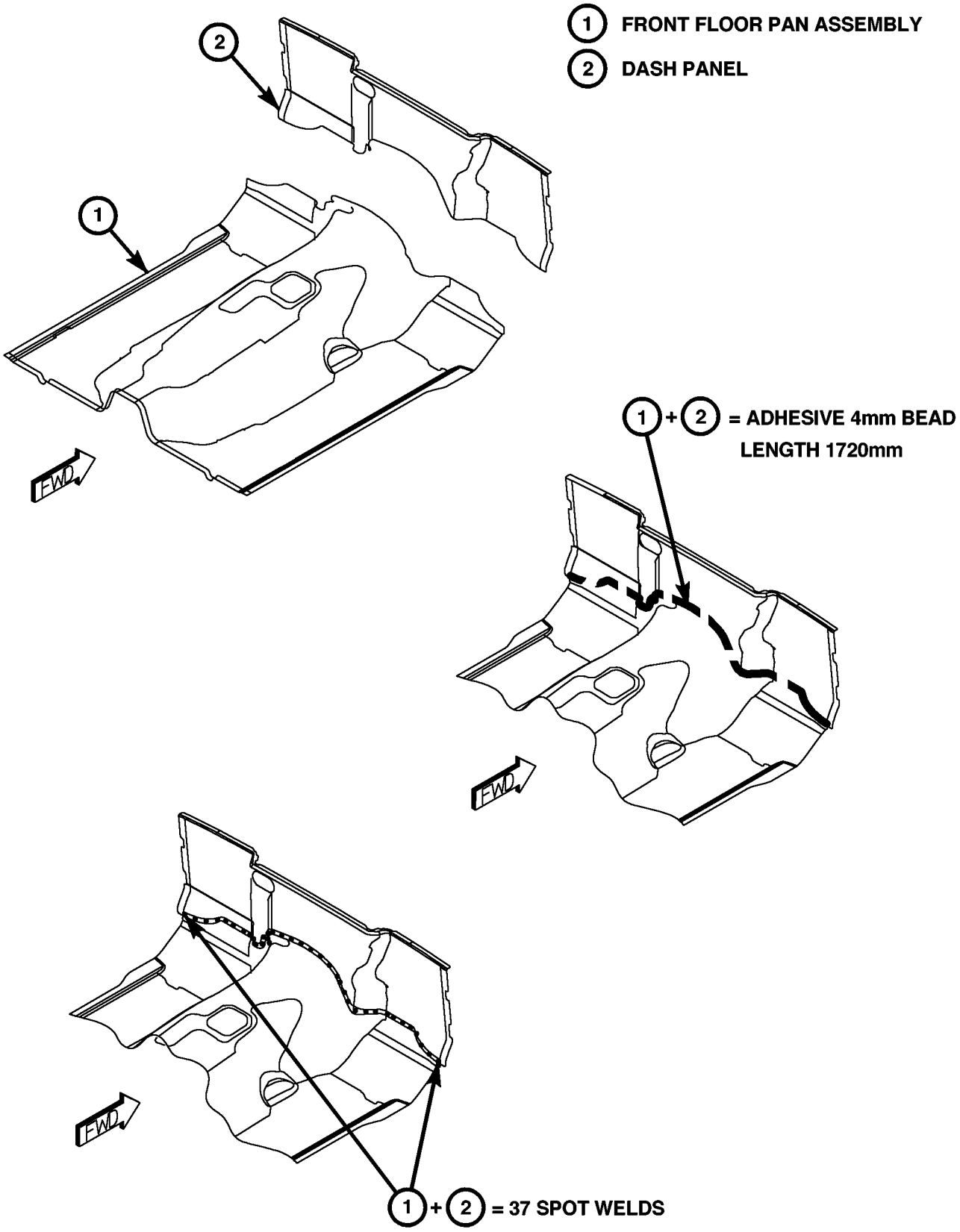

Fig. 22 FLOOR PAN ASSEMBLY

WELD AND STRUCTURAL ADHESIVE LOCATIONS (Continued)

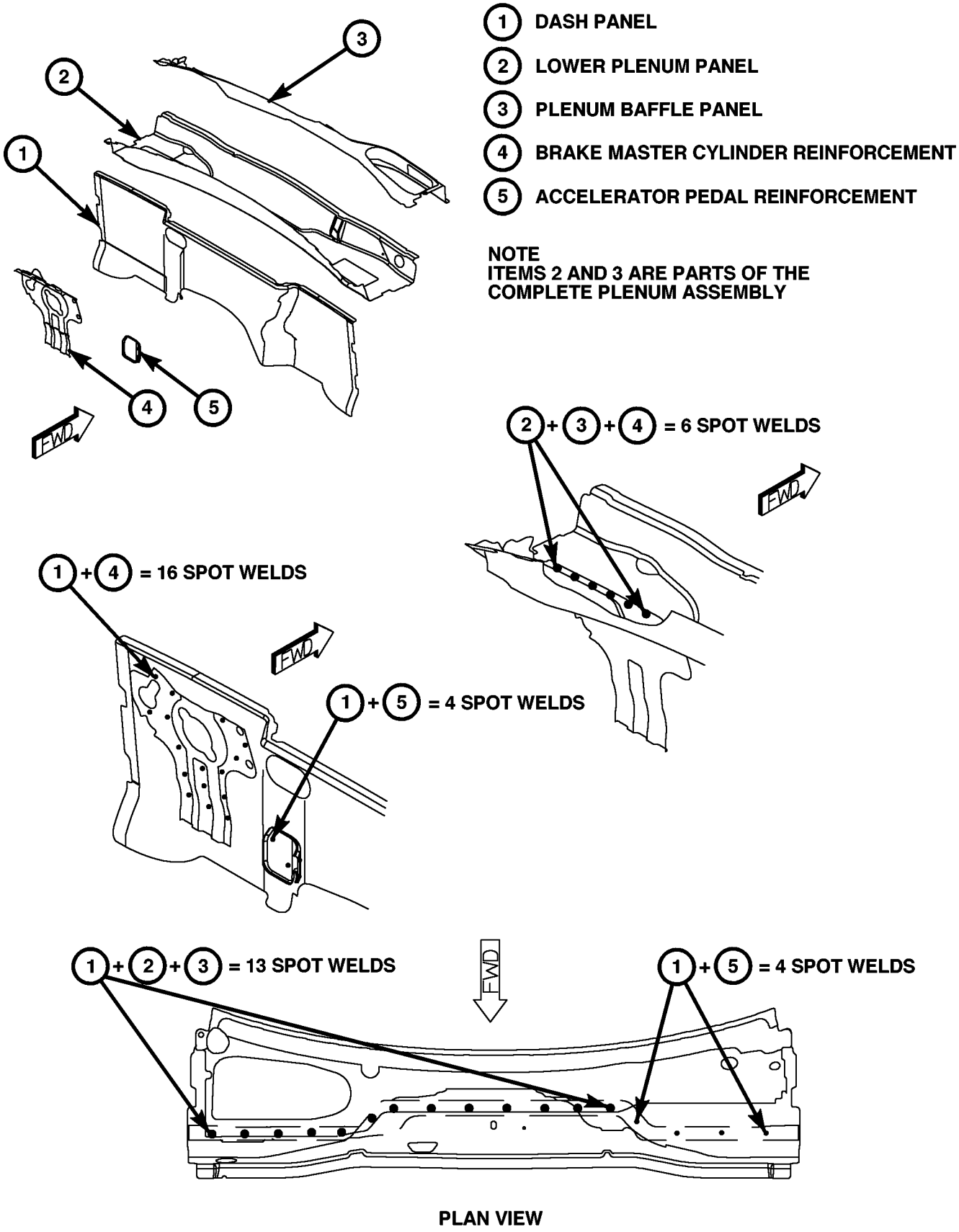

Fig. 23 DASH PANEL ASSEMBLY

WELD AND STRUCTURAL ADHESIVE LOCATIONS (Continued)

1. INNER FRONT WHEELHOUSE
2. INNER FENDER PANEL
3. PLENUM CLOSURE PANEL
4. COWL SIDE PANEL
5. LOWER PLENUM PANEL
6. PLENUM PANEL
7. DASH PANEL
8. FRONT FLOOR PAN ASSEMBLY

NOTE

ITEMS 3, 5 AND 6 ARE PARTS OF THE COMPLETE PLENUM ASSEMBLY

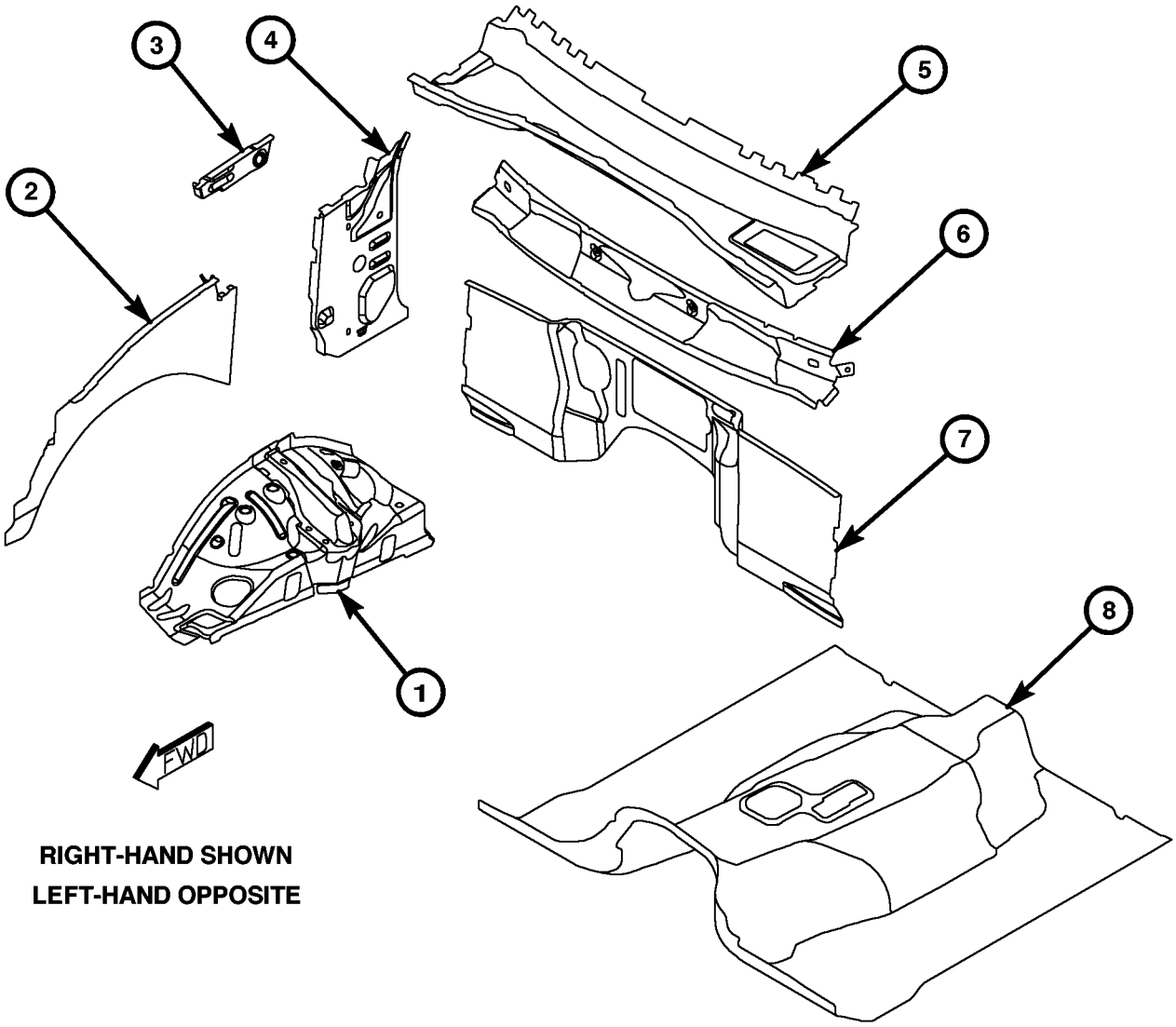

RIGHT-HAND SHOWN
LEFT-HAND OPPOSITE

Fig. 24 DASH PANEL/WHEELHOUSE ASSEMBLY

WELD AND STRUCTURAL ADHESIVE LOCATIONS (Continued)

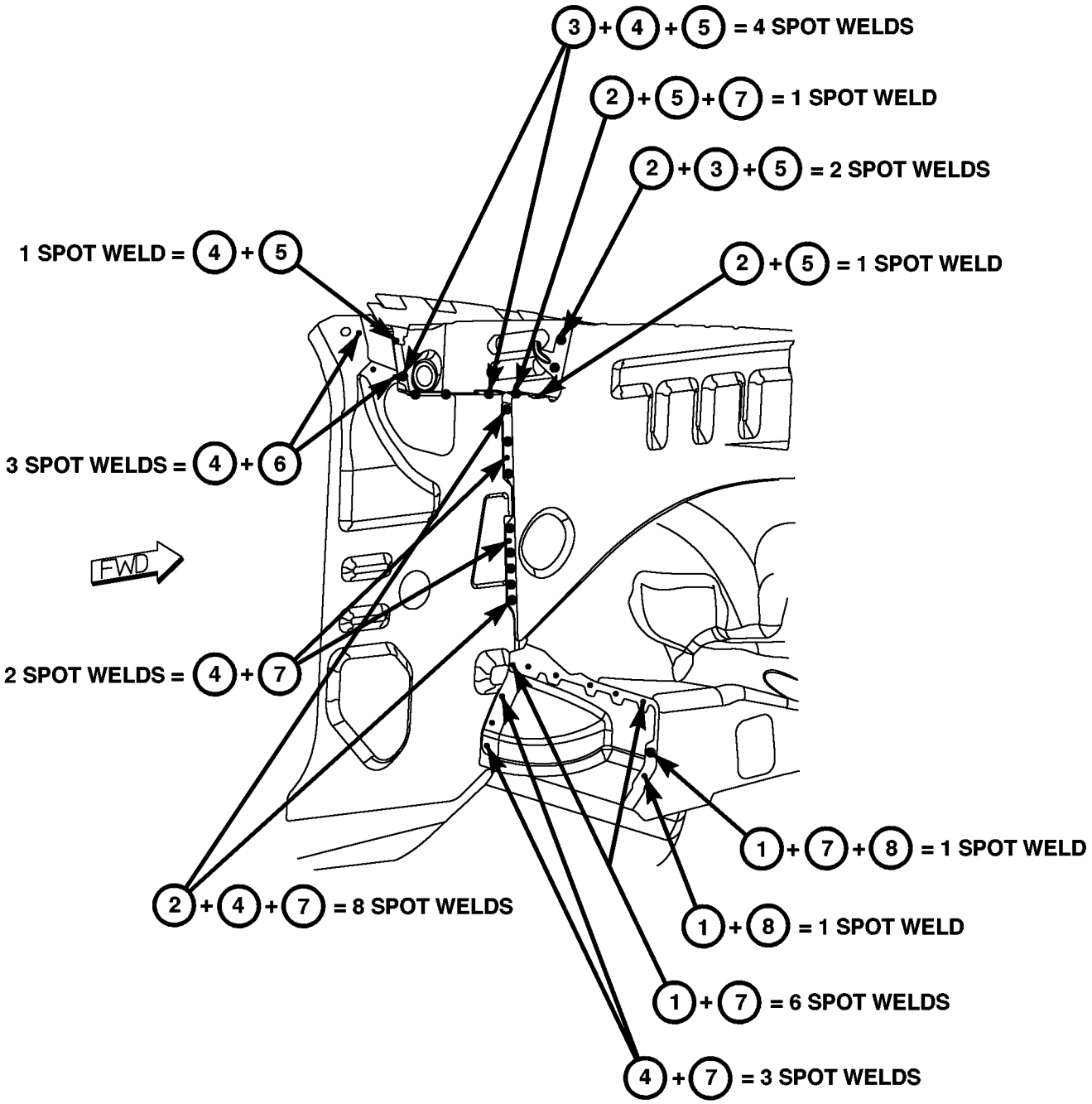

Fig. 25 COWL SIDE PANEL

WELD AND STRUCTURAL ADHESIVE LOCATIONS (Continued)

REAR FRAME RAILS

1. REAR RAIL
2. RAIL FRONT REINFORCEMENT
3. RAIL REAR REINFORCEMENT
4. RAIL CENTER REINFORCEMENT
5. SHOCK MOUNTING SLEEVE
6. EXHAUST HANGER BRACKET
7. ANCHOR PLATE
8. COIL SPRING MOUNTING BRACKET
9. CONTROL ARM MOUNTING BRACKET
10. CONTROL ARM MOUNTING BRACKET
11. REAR TORQUE BOX
12. REAR SHOCK MOUNTING BRACKET
13. REAR SHOCK MOUNTING REINFORCEMENT
14. SPRING MOUNTING REINFORCEMENT
15. REAR SPRING OUTER CROSSMEMBER
16. FUEL PASS THROUGH SLEEVE

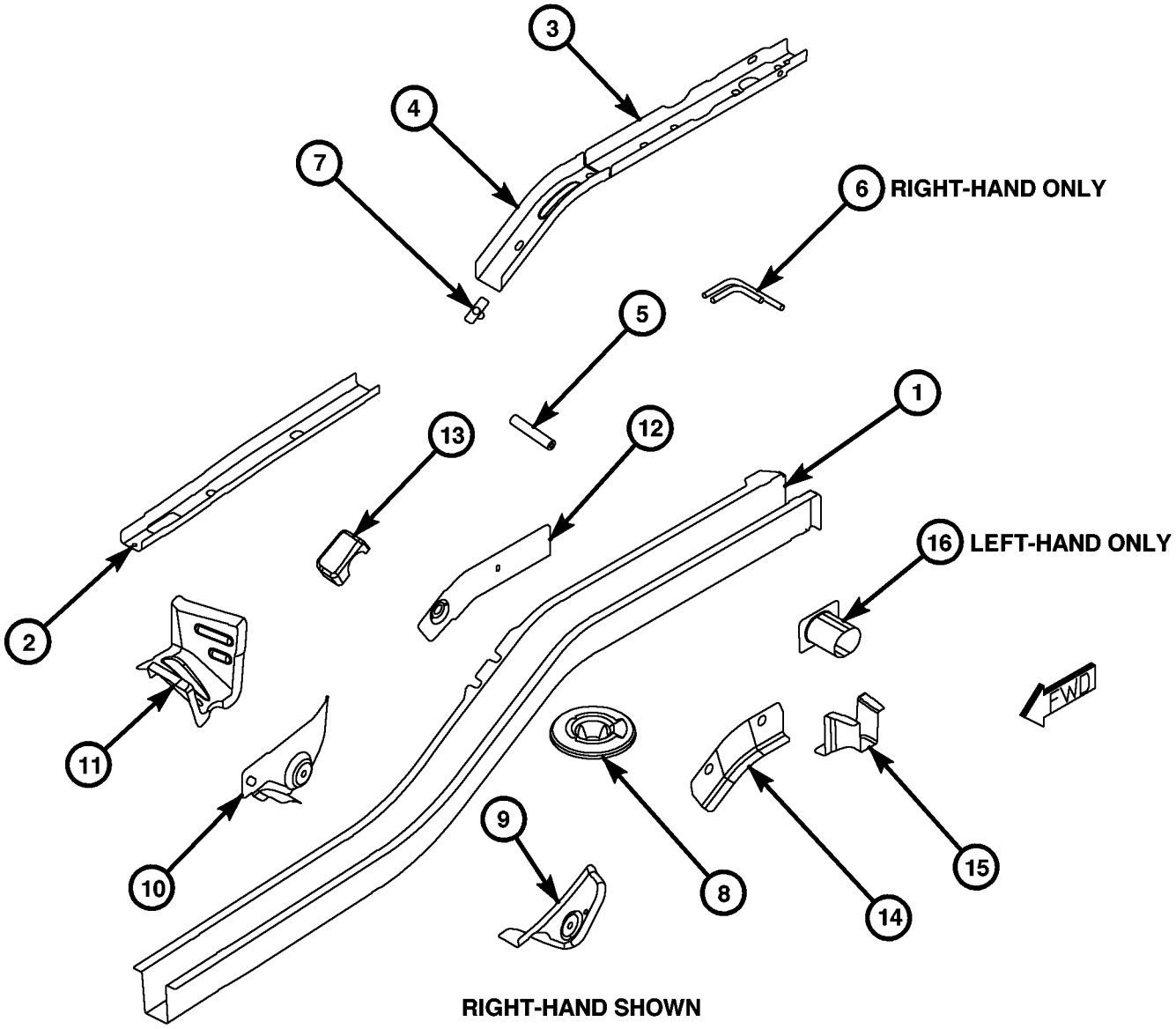

RIGHT-HAND SHOWN
LEFT-HAND OPPOSITE UNLESS SHOWN

Fig. 26 REAR FRAME RAILS

WELD AND STRUCTURAL ADHESIVE LOCATIONS (Continued)

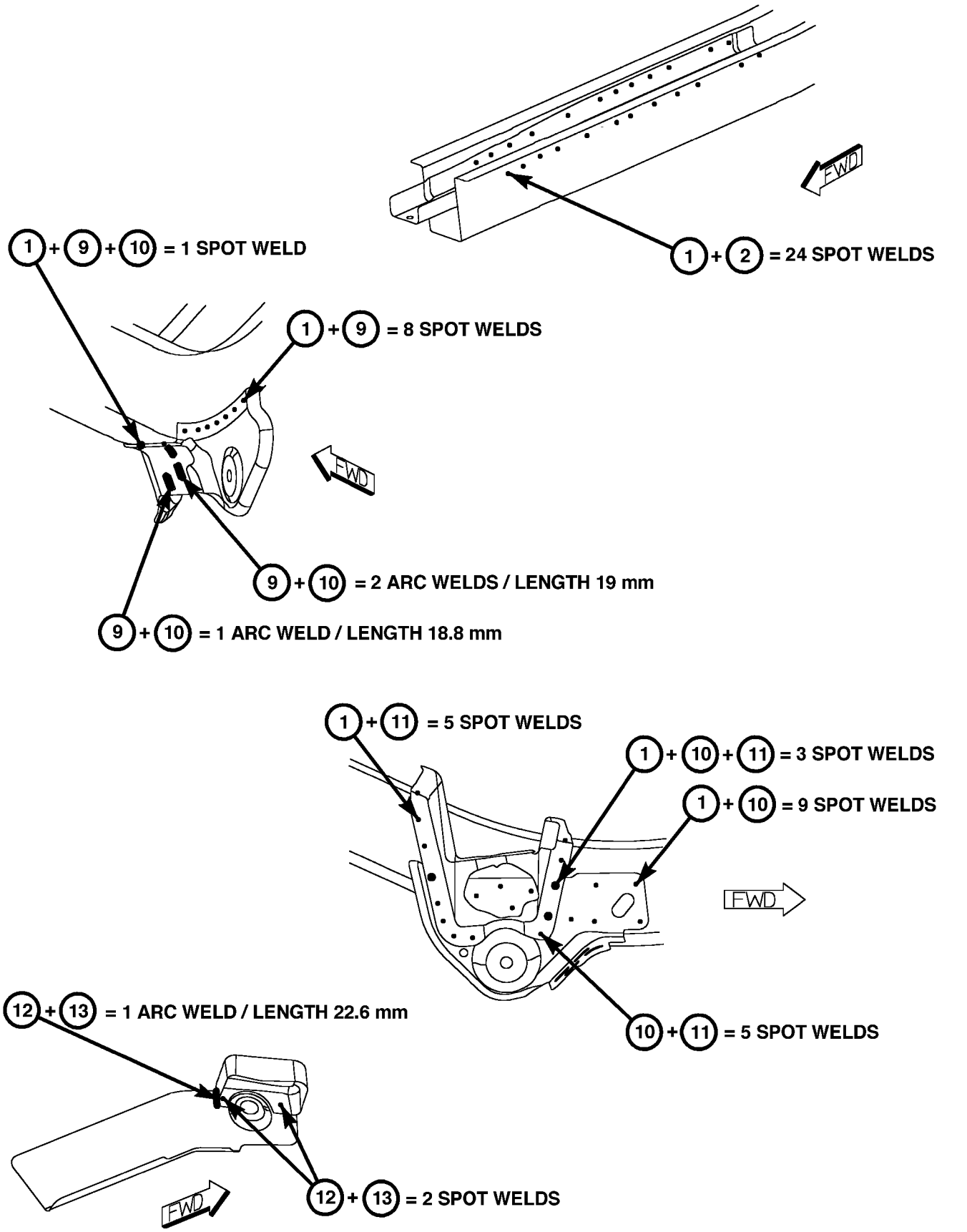

Fig. 27 005 REAR MOUNTING BRACKETS

WELD AND STRUCTURAL ADHESIVE LOCATIONS (Continued)

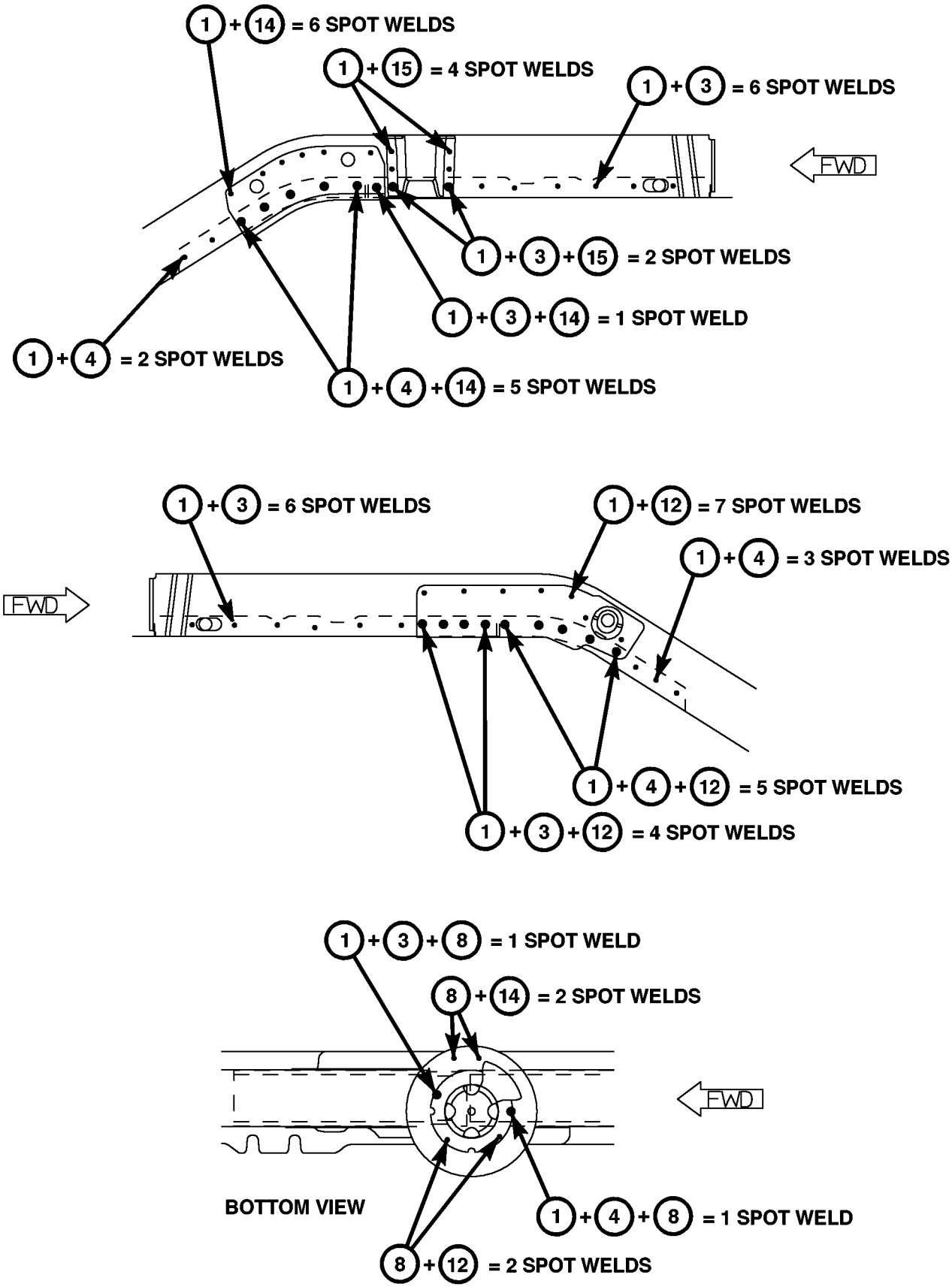

Fig. 28 REAR SPRING MOUNTINGS

WELD AND STRUCTURAL ADHESIVE LOCATIONS (Continued)

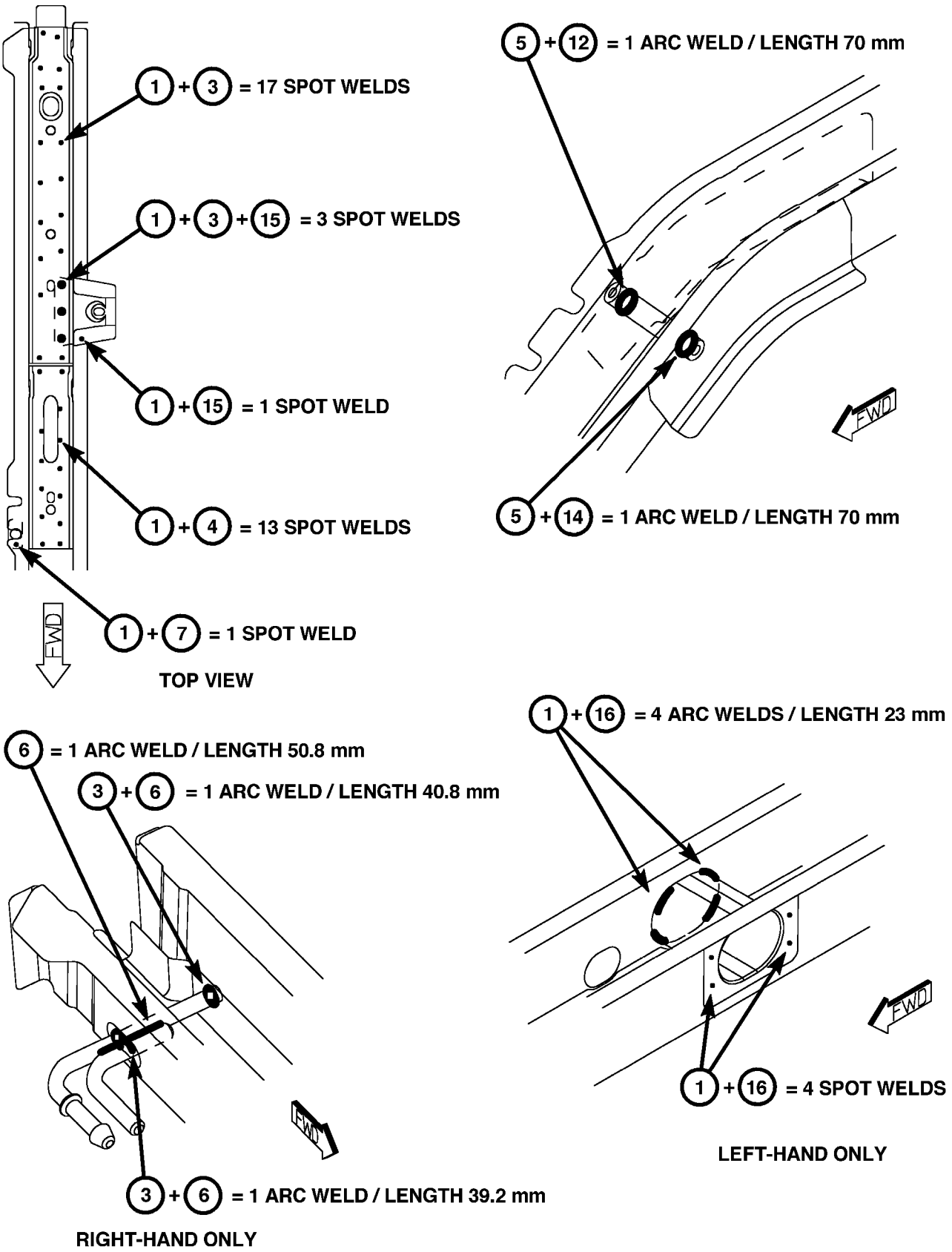

80cba4fd

Fig. 29 006 REAR SPRING, SHOCK, FUEL PASS AND EXHAUST BRACKETS

WELD AND STRUCTURAL ADHESIVE LOCATIONS (Continued)

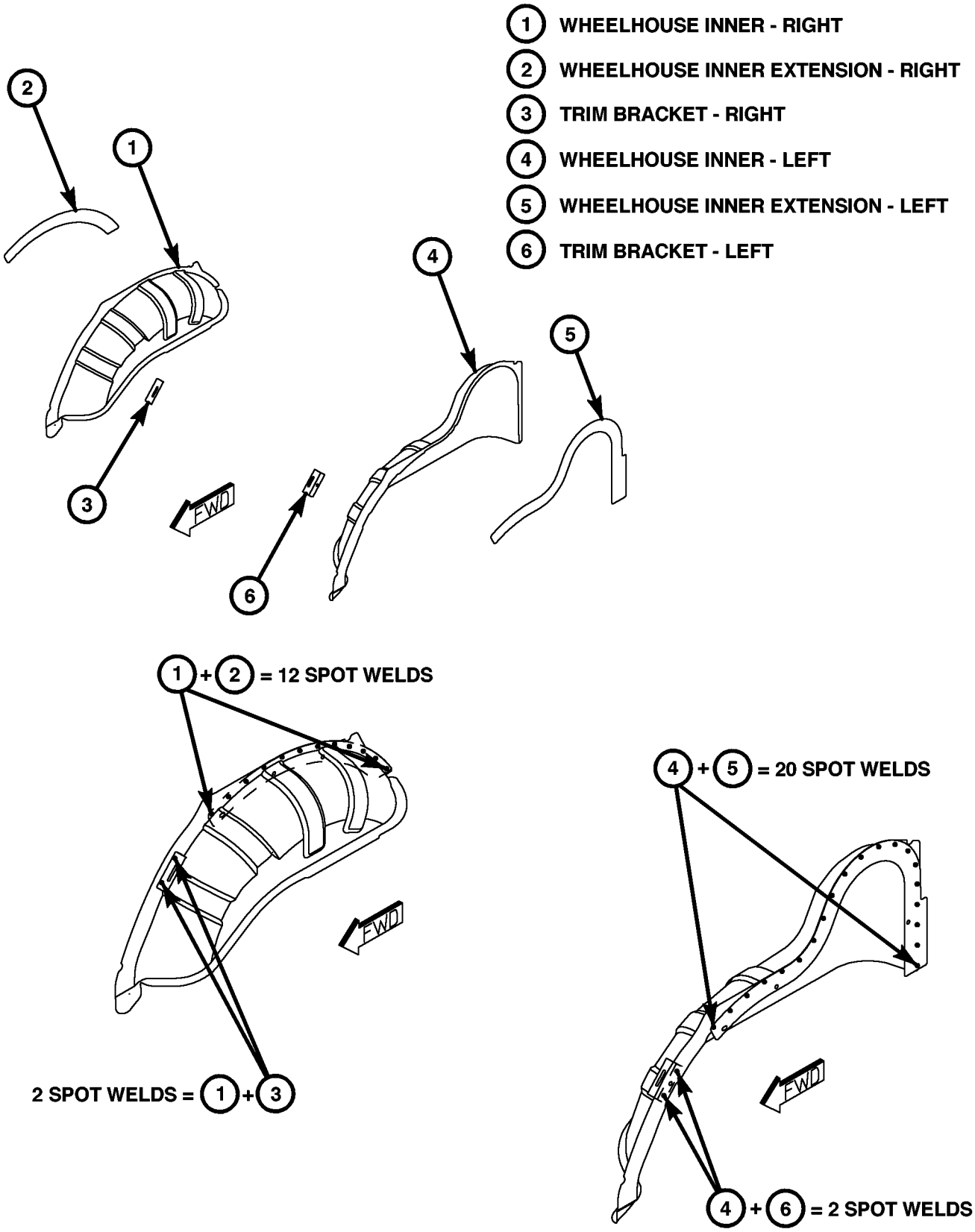

Fig. 30 REAR WHEELHOUSE ASSEMBLIES

WELD AND STRUCTURAL ADHESIVE LOCATIONS (Continued)

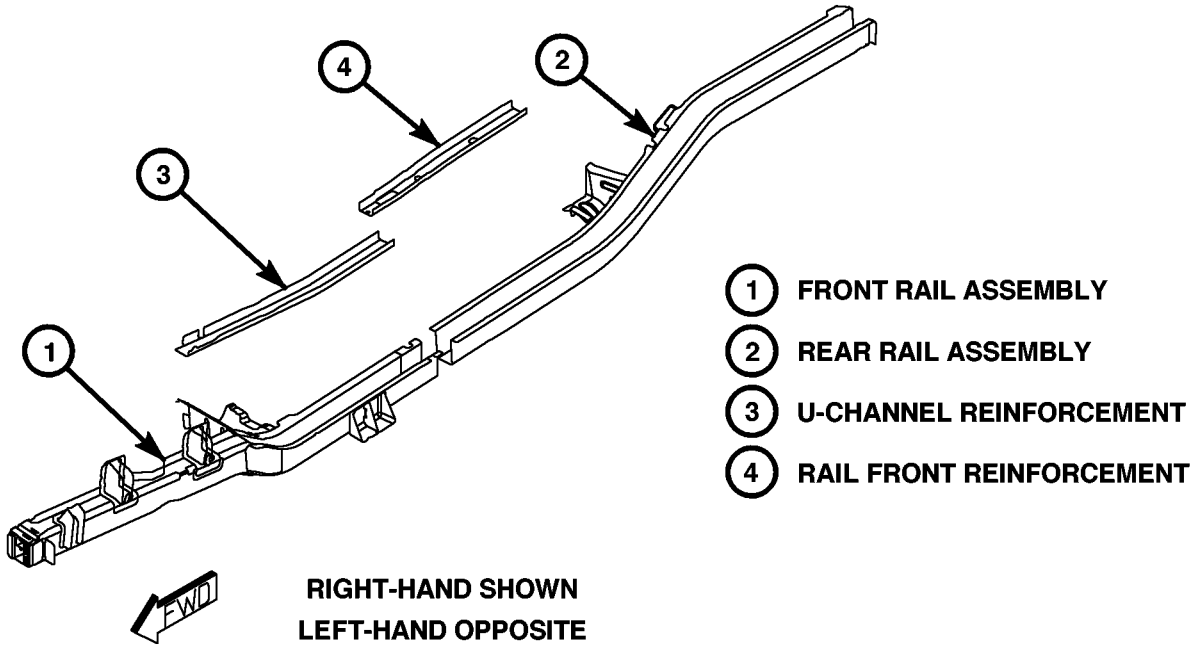

NOTE

ITEM 2 IS PART OF THE COMPLETE REAR FLOOR PAN ASSEMBLY

ITEM 3 IS PART OF THE COMPLETE FRONT RAIL ASSEMBLY

ITEM 4 IS PART OF THE COMPLETE REAR RAIL ASSEMBLY

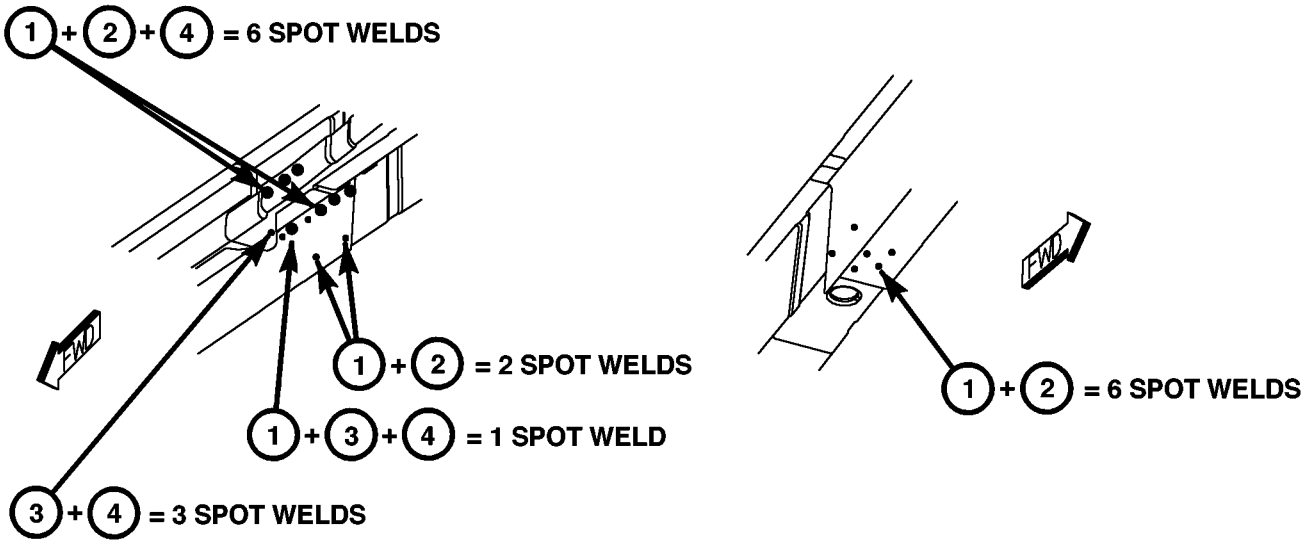

Fig. 31 RAIL ASSEMBLIES – FRONT/REAR

WELD AND STRUCTURAL ADHESIVE LOCATIONS (Continued)

REAR FLOOR PAN ASSEMBLY

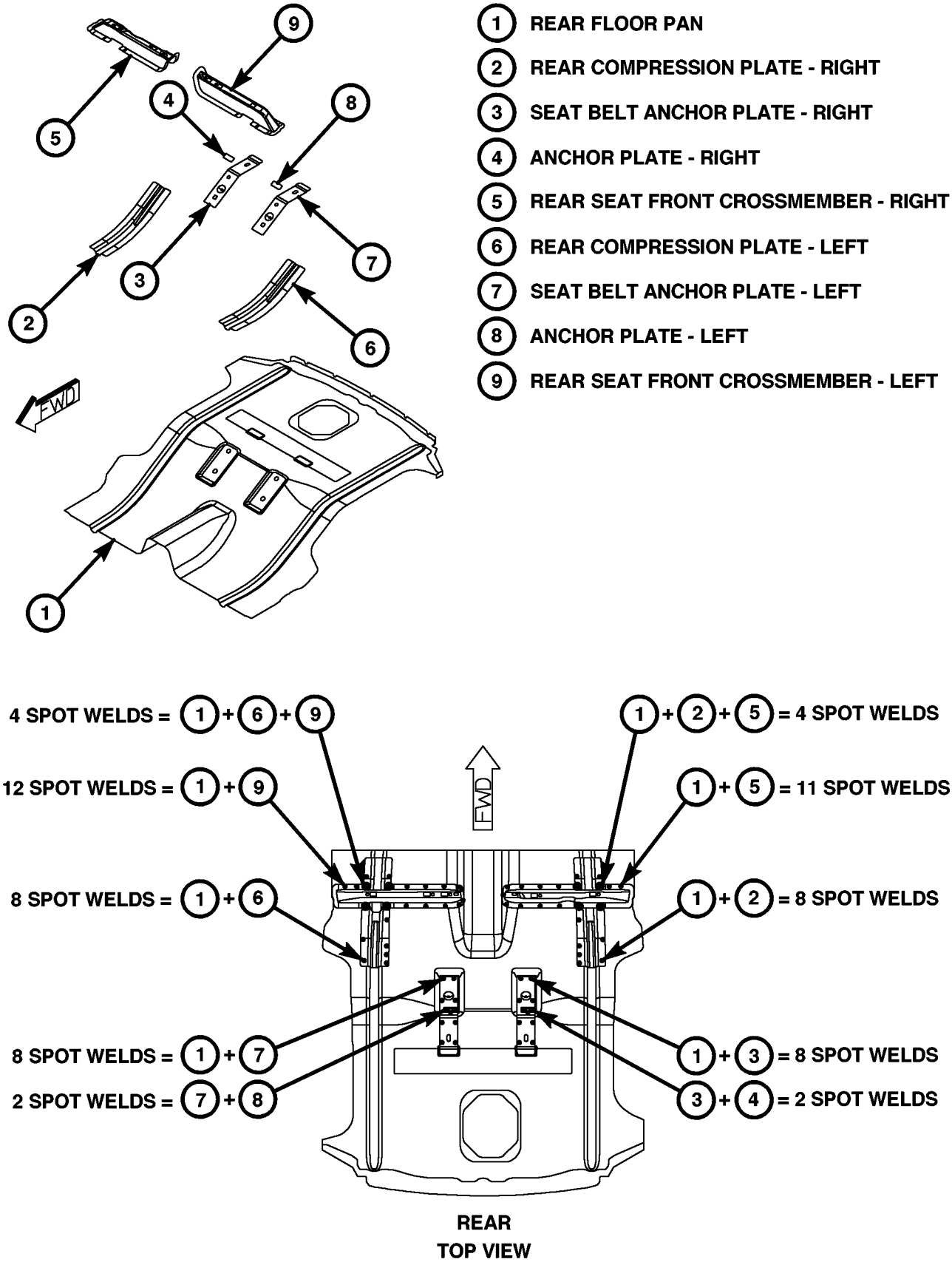

Fig. 32 REAR FLOOR PAN ASSEMBLY

WELD AND STRUCTURAL ADHESIVE LOCATIONS (Continued)

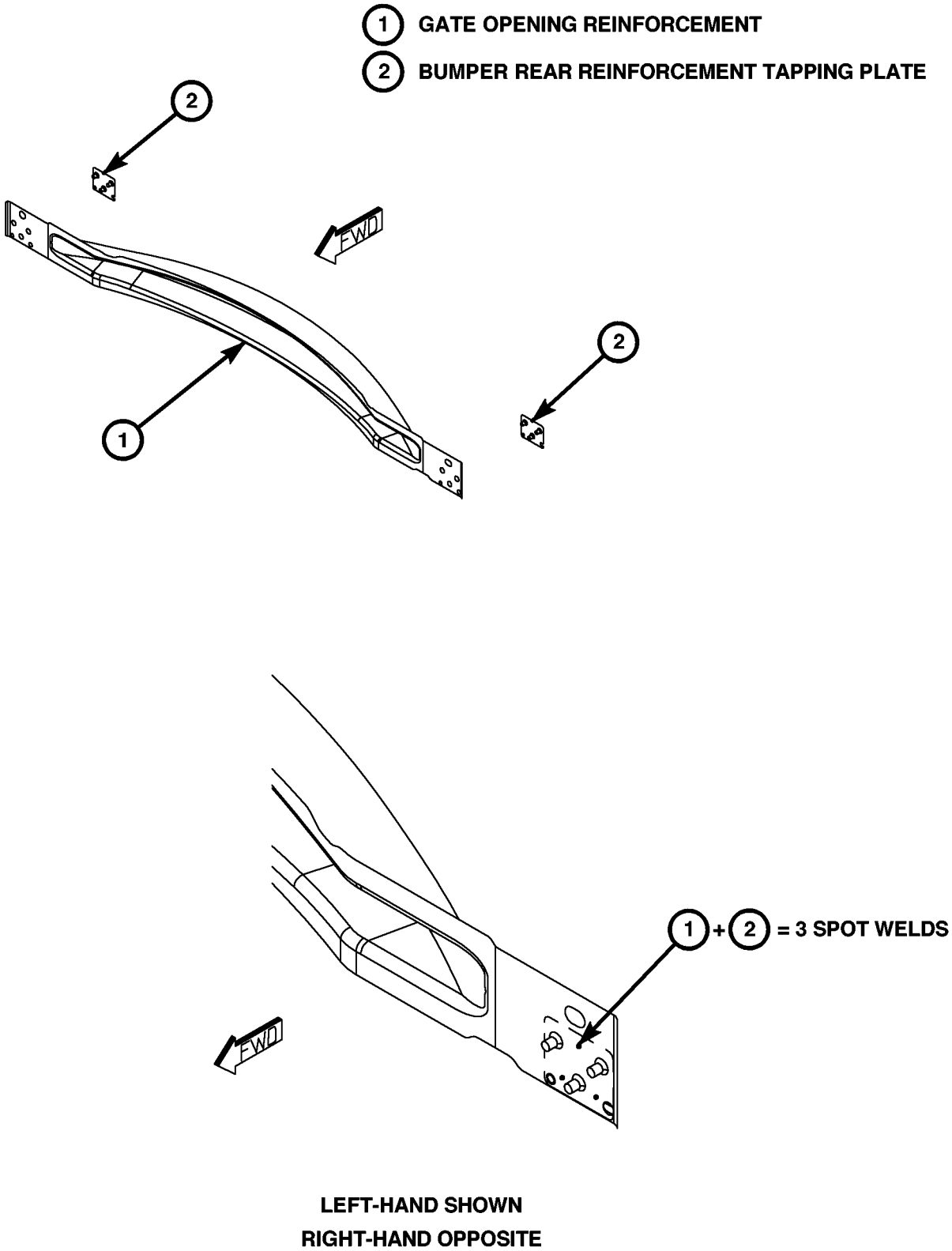

Fig. 33 BUMPER AND SWING GATE REINFORCEMENT

WELD AND STRUCTURAL ADHESIVE LOCATIONS (Continued)

1. REAR FLOOR PAN ASSEMBLY
2. SEAT BELT ANCHOR PLATE
3. REAR COMPRESSION PLATE
4. REAR SEAT FRONT CROSSMEMBER
5. REAR RAIL ASSEMBLY - RIGHT
6. REAR RAIL ASSEMBLY - LEFT
7. REAR TORQUE BOX
8. ANCHOR PLATE
9. REAR SHOCK MOUNTING REINFORCEMENT
10. FUEL PASS-THROUGH SLEEVE
11. REAR SEAT CROSSMEMBER - RIGHT
12. A-ARM LOWER BRACKET
13. A-ARM UPPER BRACKET
14. REAR SEAT CROSSMEMBER BULKHEAD
15. REAR SPRING CENTER CROSSMEMBER
16. REAR SPRING OUTER CROSSMEMBER
17. FUEL TANK SUPPORT
18. REAR CROSSMEMBER
19. GATE OPENING REINFORCEMENT
20. REAR SEAT CROSSMEMBER - LEFT
21. FUEL TANK SUPPORT REINFORCEMENT

NOTE
ITEMS 7,8,9 AND 10 ARE PARTS OF THE RIGHT AND LEFT REAR RAIL ASSEMBLIES

ITEMS 2,3 AND 4 ARE PARTS OF THE REAR FLOOR PAN ASSEMBLY

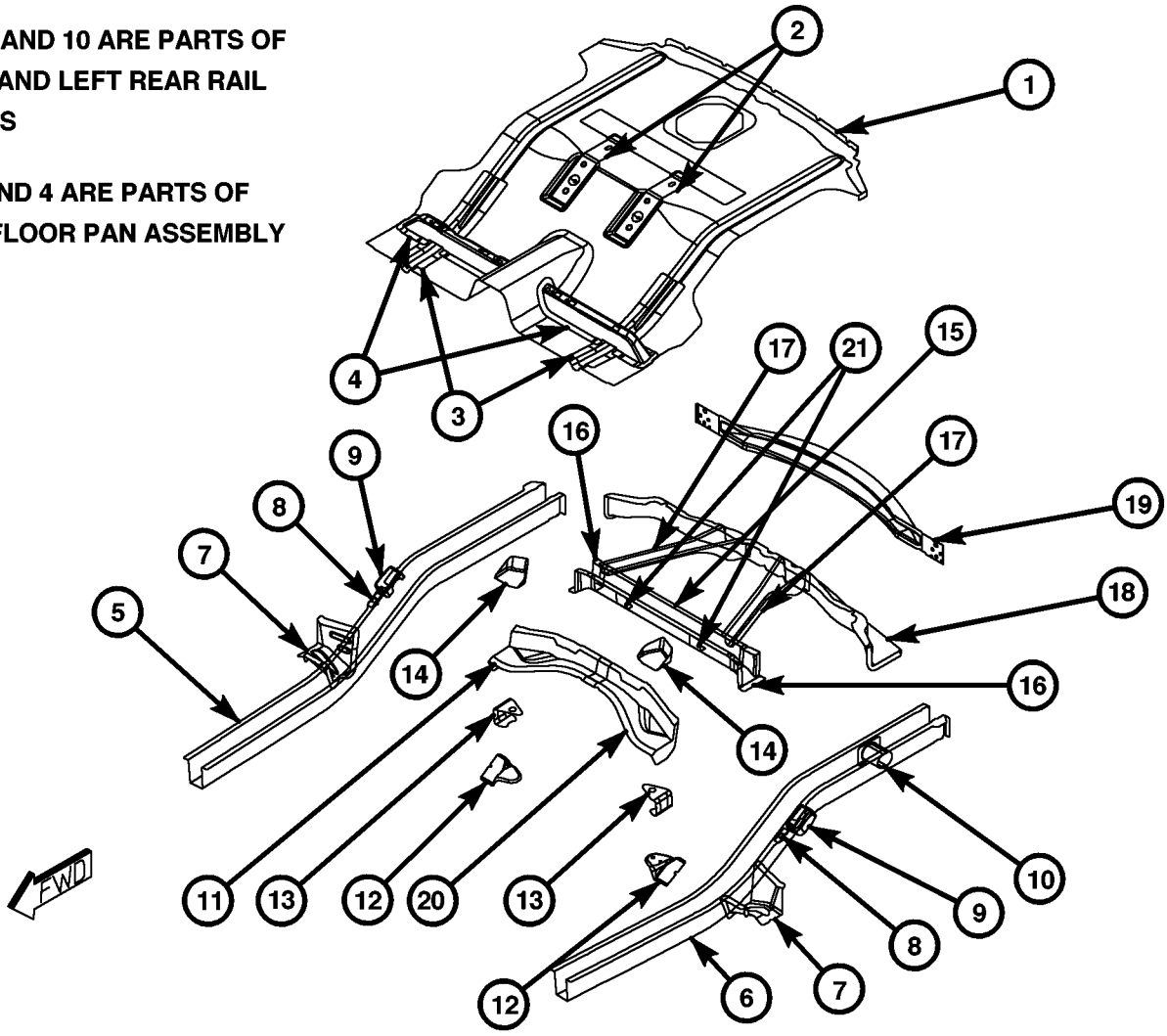

Fig. 34 REAR FLOOR PAN

WELD AND STRUCTURAL ADHESIVE LOCATIONS (Continued)

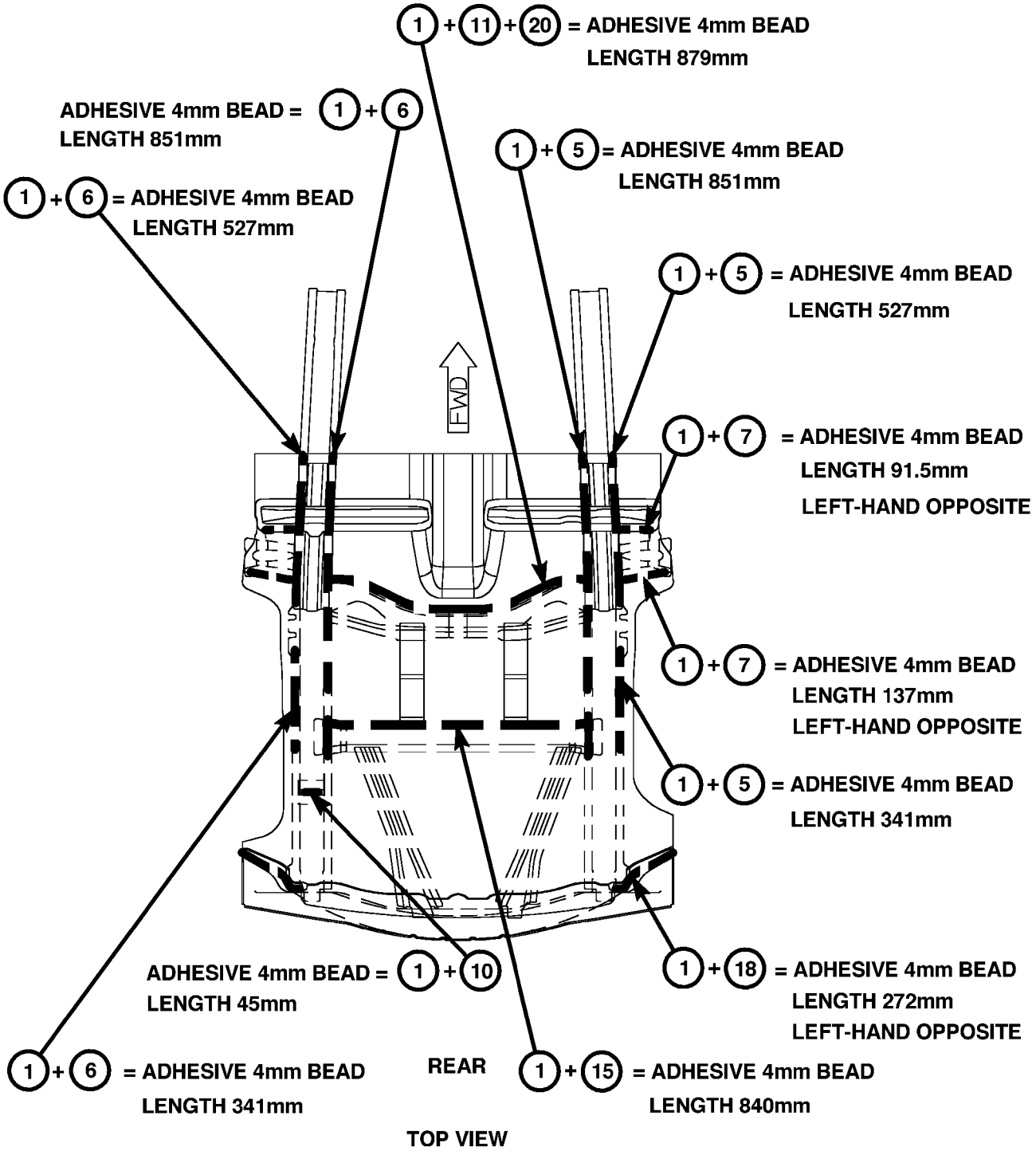

80cba552

Fig. 35 007 REAR FLOOR PAN

WELD AND STRUCTURAL ADHESIVE LOCATIONS (Continued)

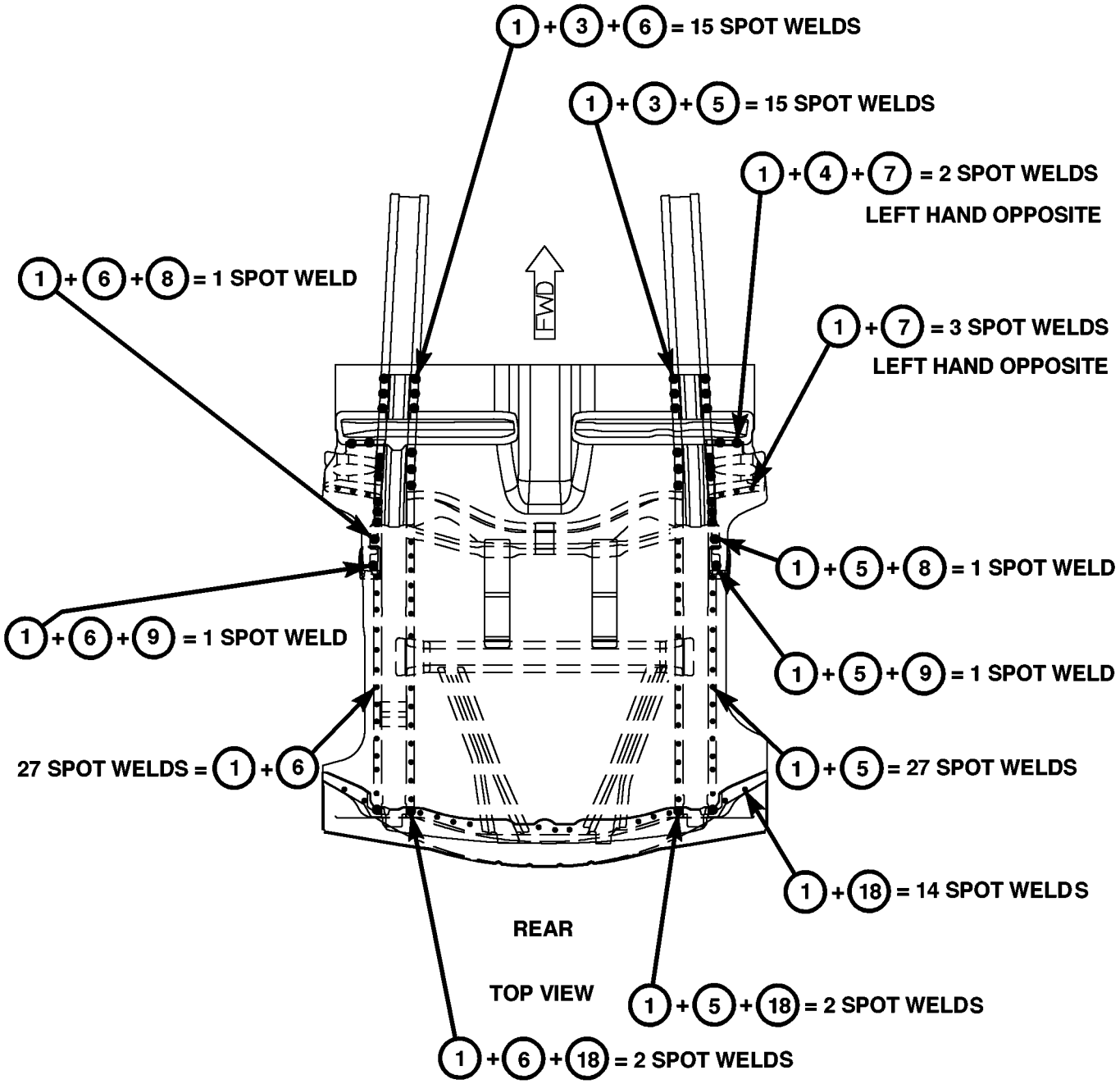

Fig. 36 REAR FLOOR PAN

WELD AND STRUCTURAL ADHESIVE LOCATIONS (Continued)

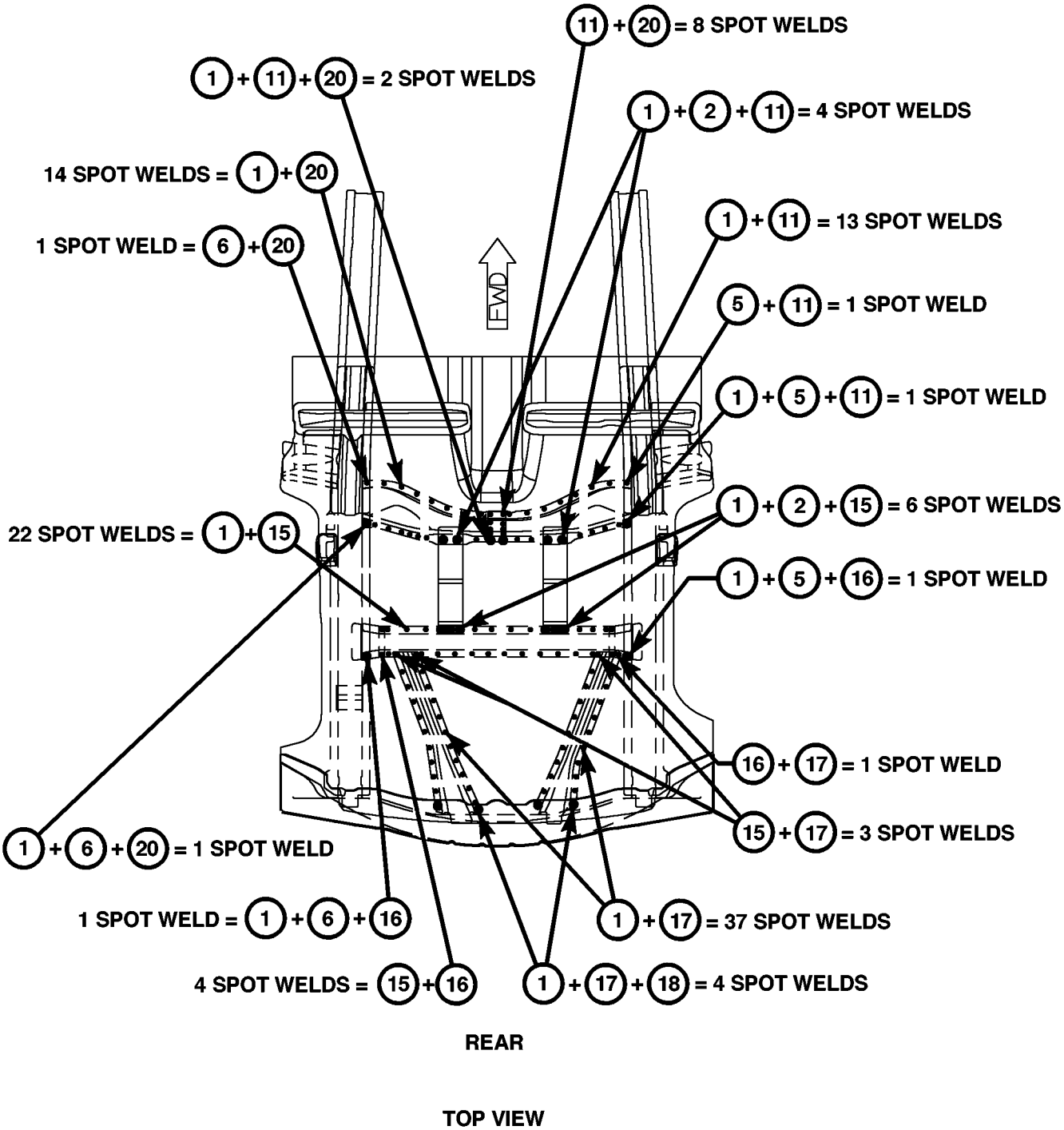

Fig. 37 REAR FLOOR PAN

WELD AND STRUCTURAL ADHESIVE LOCATIONS (Continued)

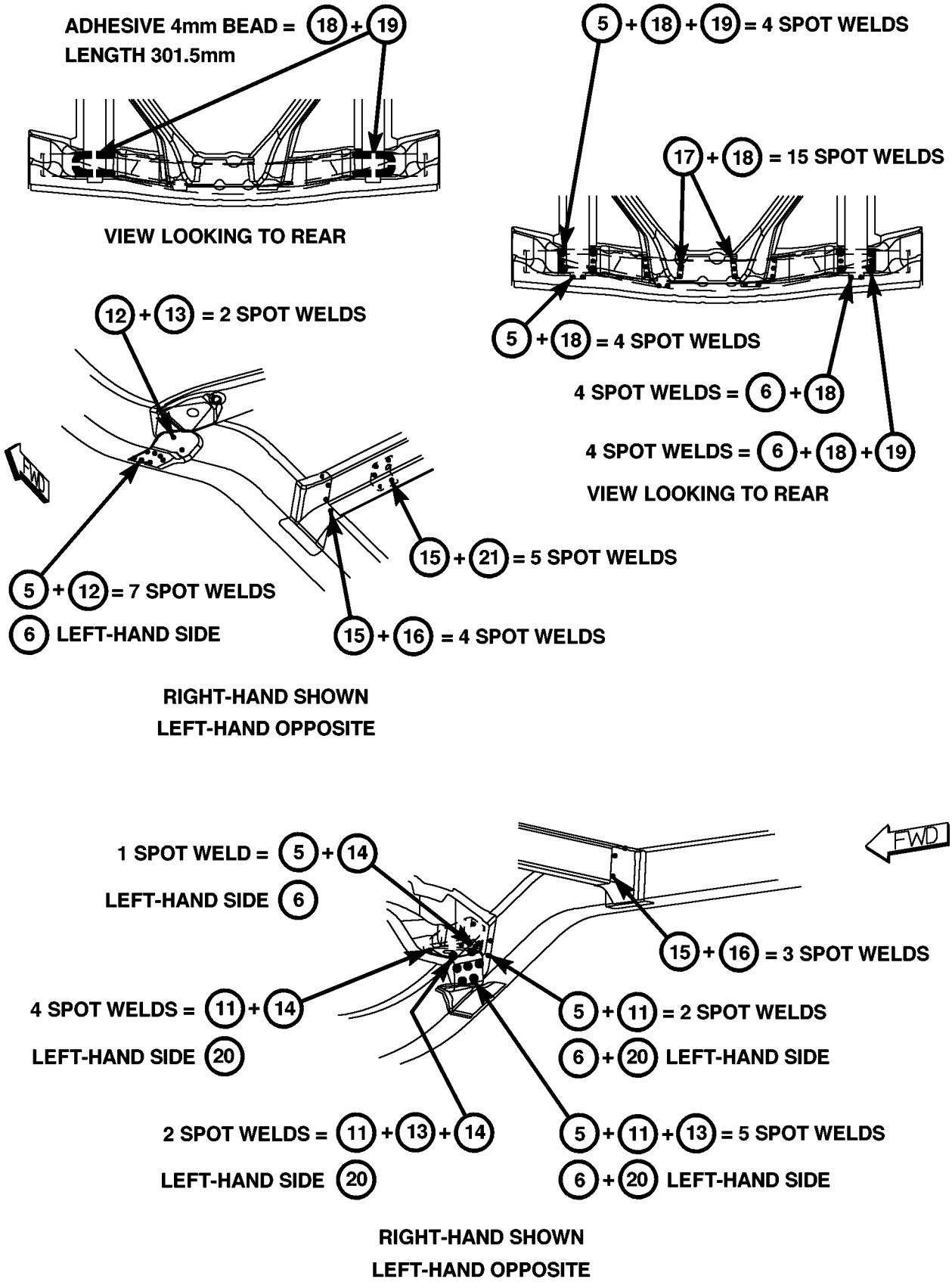

Fig. 38 REAR CROSSMEMBERS AND REINFORCEMENTS

WELD AND STRUCTURAL ADHESIVE LOCATIONS (Continued)

FULL FLOOR PAN ASSEMBLY

1. FRONT FLOOR PAN ASSEMBLY
2. REAR FLOOR PAN ASSEMBLY
3. FRONT RAIL ASSEMBLY - RIGHT
4. FRONT RAIL ASSEMBLY - LEFT
5. REAR RAIL ASSEMBLY - RIGHT
6. REAR RAIL ASSEMBLY - LEFT
7. COMPRESSION PLATE
8. REINFORCEMENT PLATE
9. FRONT SEAT FRONT CROSSMEMBER
10. FRONT SEAT REAR CROSSMEMBER
11. COMPRESSION PLATE
12. REAR SEAT FRONT CROSSMEMBER
13. BODY SIDE SILL
14. COWL SIDE PANEL
15. FRONT TORQUE BOX
16. REAR TORQUE BOX
17. INNER WHEELHOUSE - RIGHT
18. INNER WHEELHOUSE - LEFT
19. REAR SHOCK MOUNTING REINFORCEMENT
20. REAR CROSSMEMBER
21. D-PILLAR GUSSET - RIGHT
22. D-PILLAR GUSSET - LEFT

NOTE

ITEMS 7,9,10 AND 11 ARE PARTS OF THE FRONT FLOOR PAN ASSEMBLY

ITEMS 12,16,19 AND 20 ARE PARTS OF THE COMPLETE REAR FLOOR PAN ASSEMBLY

ITEM 15 IS PART OF THE RIGHT AND LEFT FRONT RAIL ASSEMBLIES

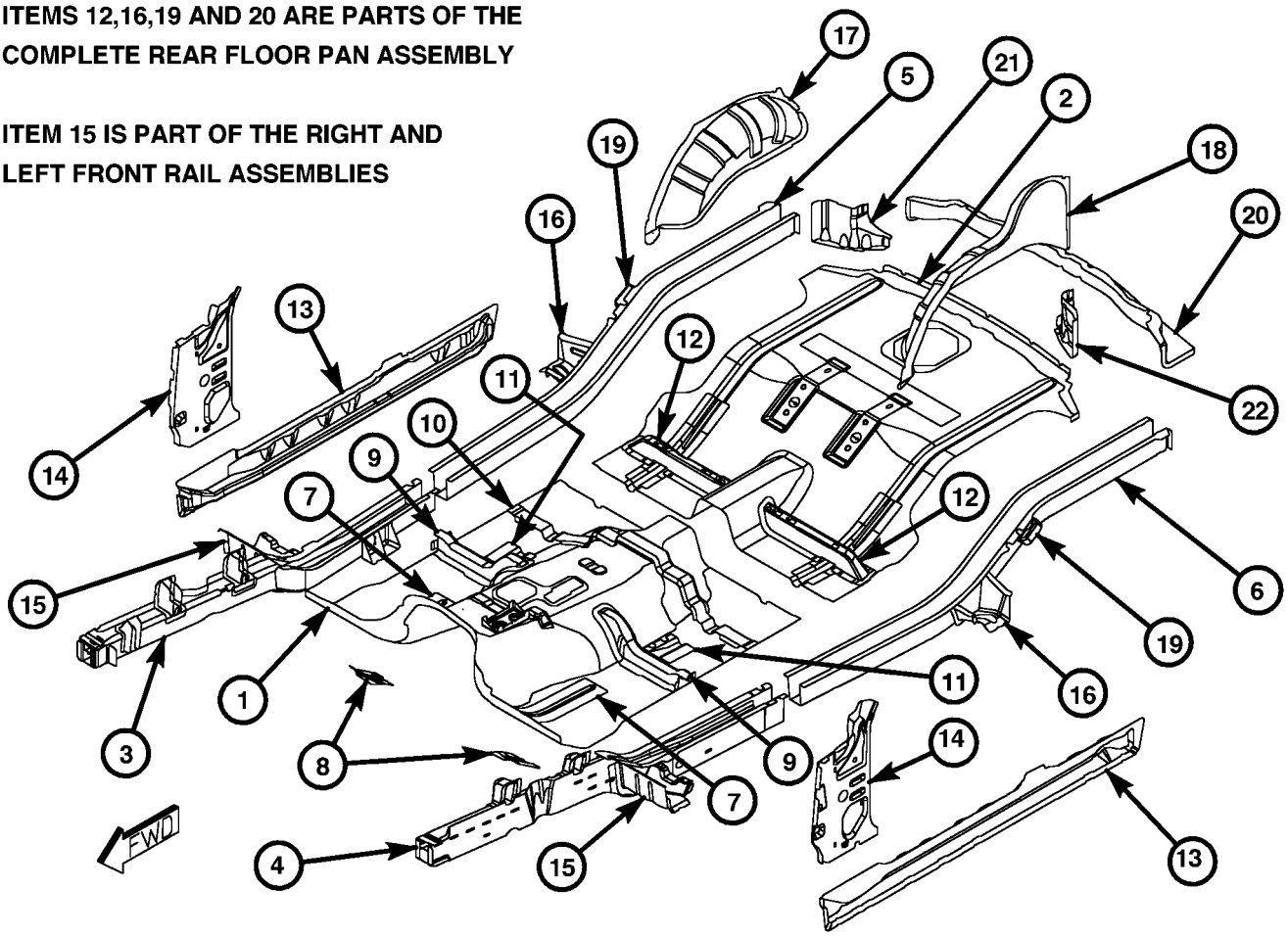

Fig. 39 FLOOR PAN ASSEMBLIES

WELD AND STRUCTURAL ADHESIVE LOCATIONS (Continued)

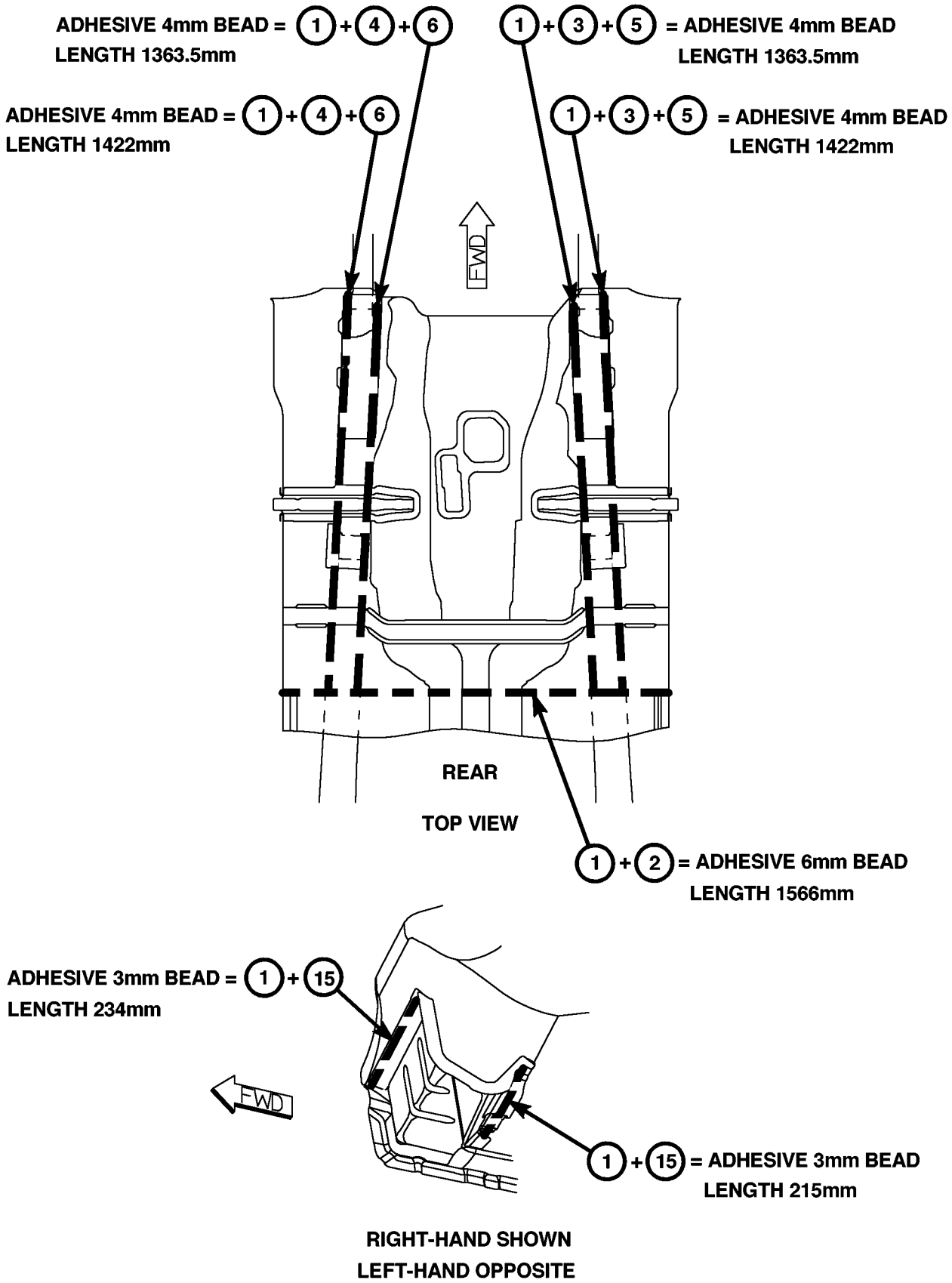

Fig. 40 FRONT RAILS – ADHESIVE LOCATIONS

WELD AND STRUCTURAL ADHESIVE LOCATIONS (Continued)

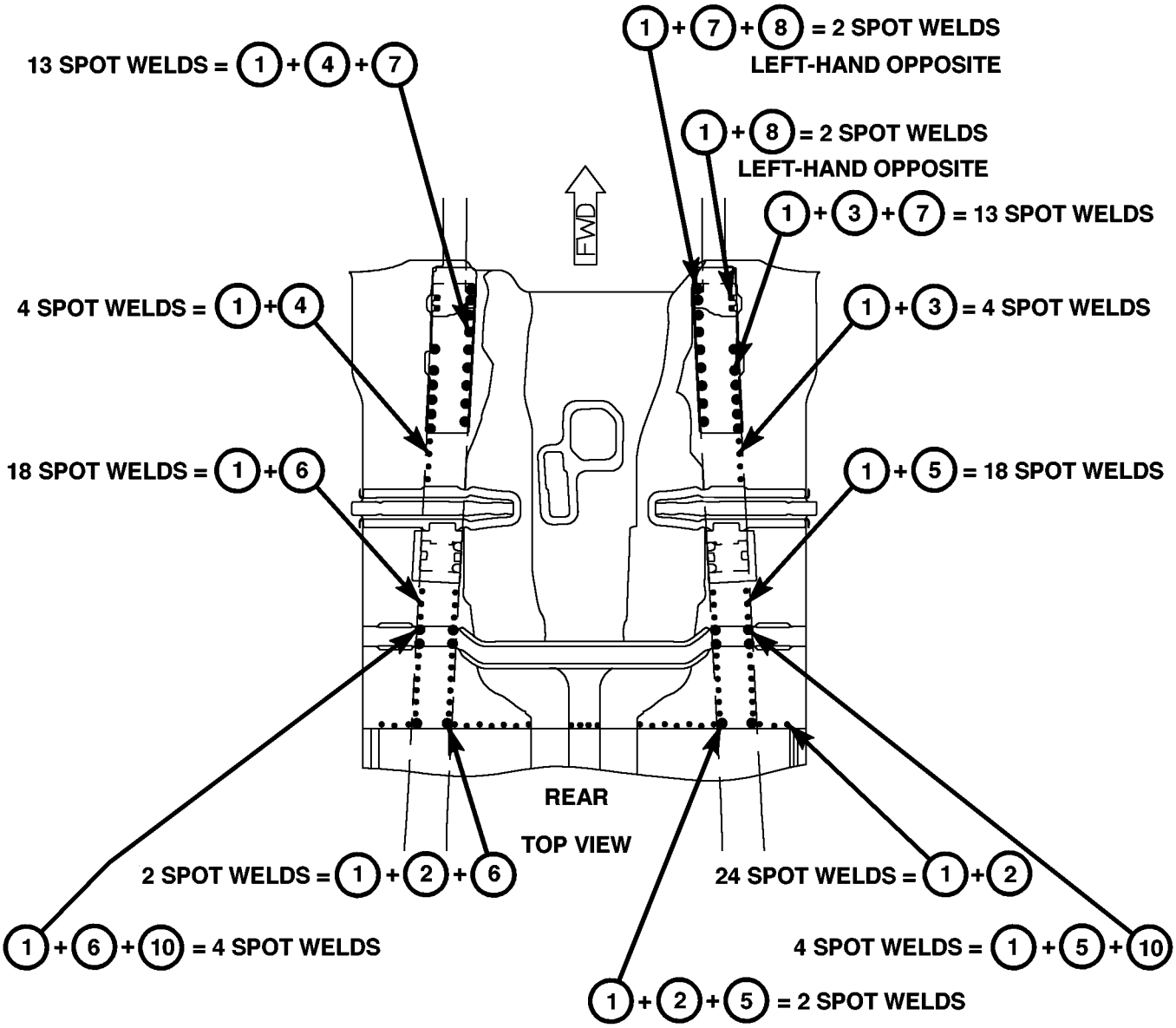

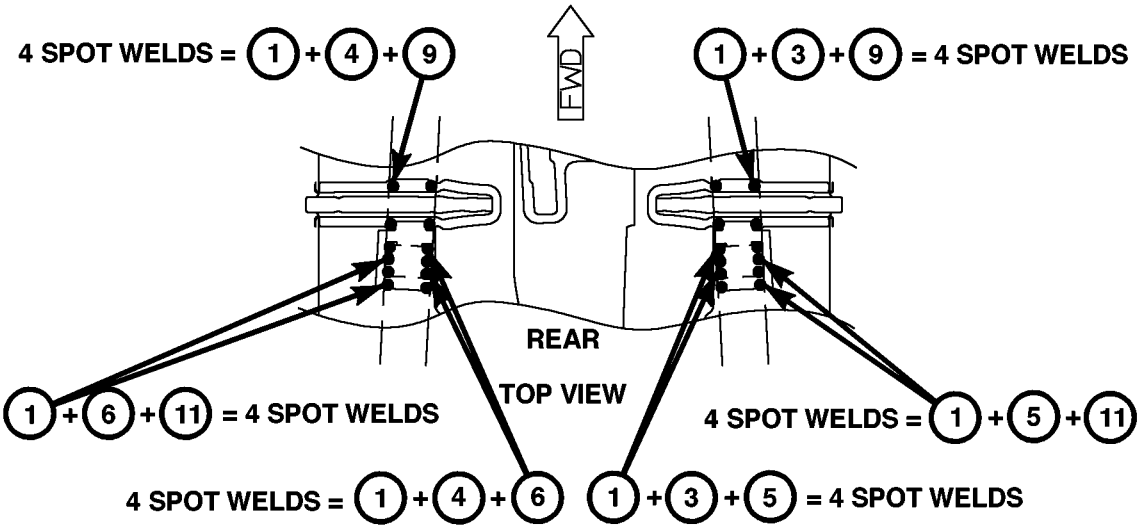

Fig. 41 FRONT RAILS – WELD LOCATIONS

WELD AND STRUCTURAL ADHESIVE LOCATIONS (Continued)

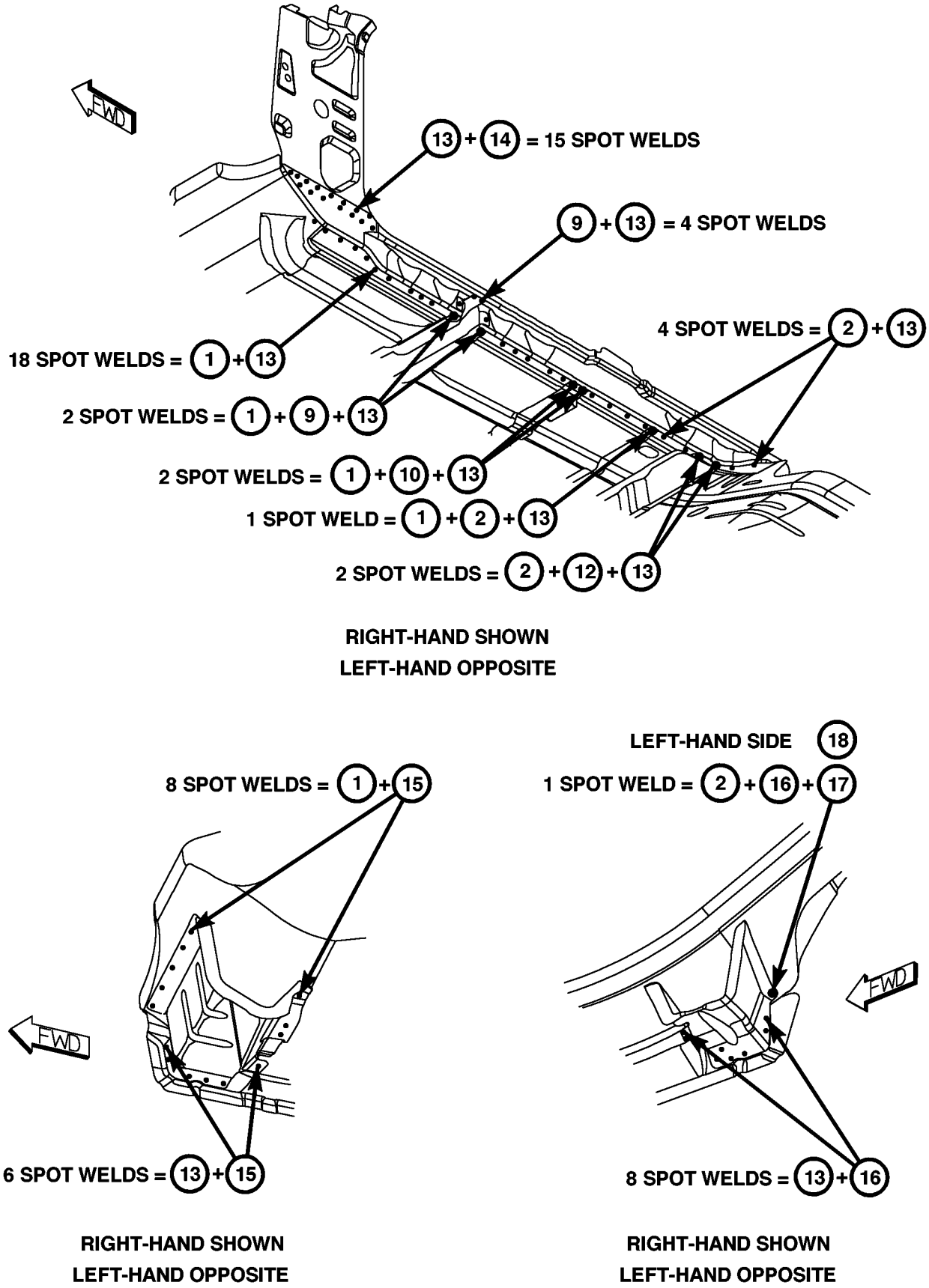

Fig. 42 SIDE SILLS

WELD AND STRUCTURAL ADHESIVE LOCATIONS (Continued)

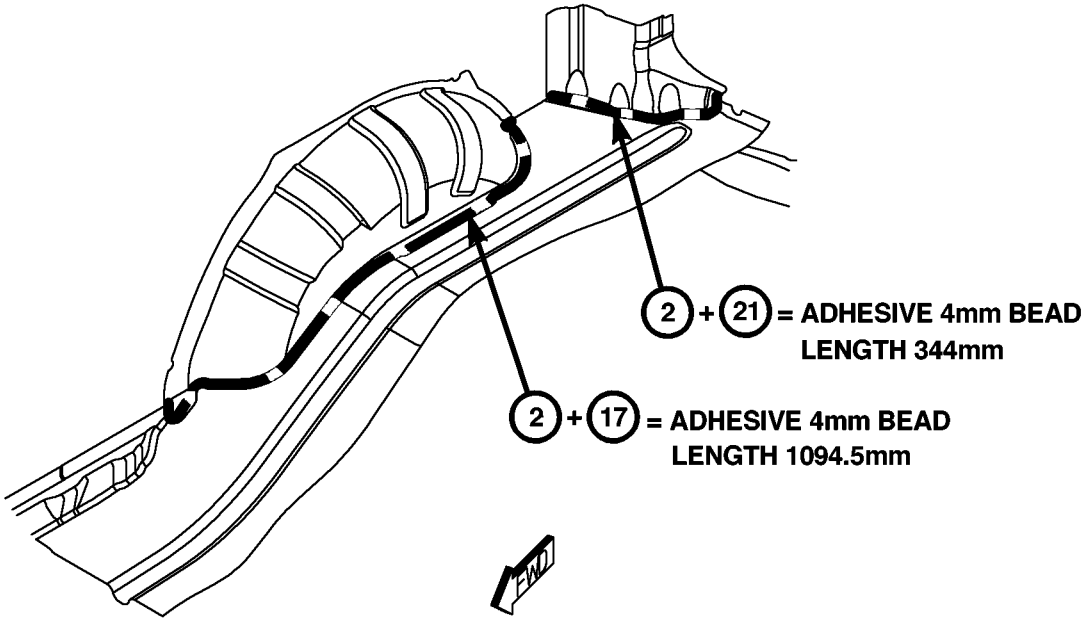

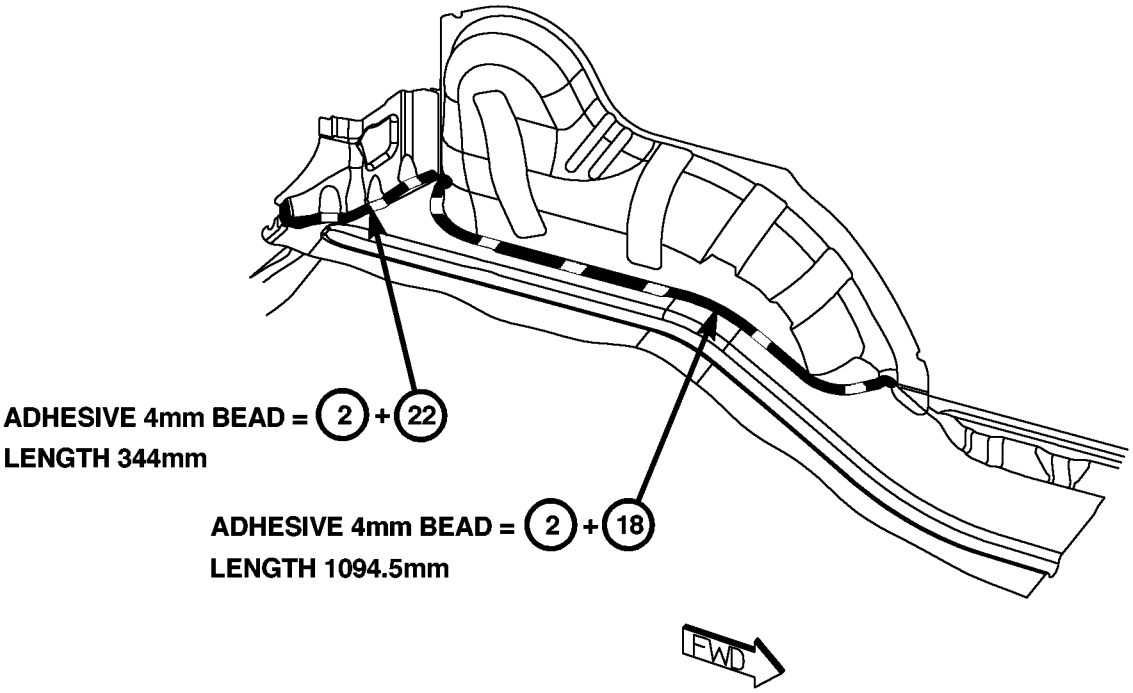

Fig. 43 WHEELHOUSES – ADHESIVE LOCATIONS

WELD AND STRUCTURAL ADHESIVE LOCATIONS (Continued)

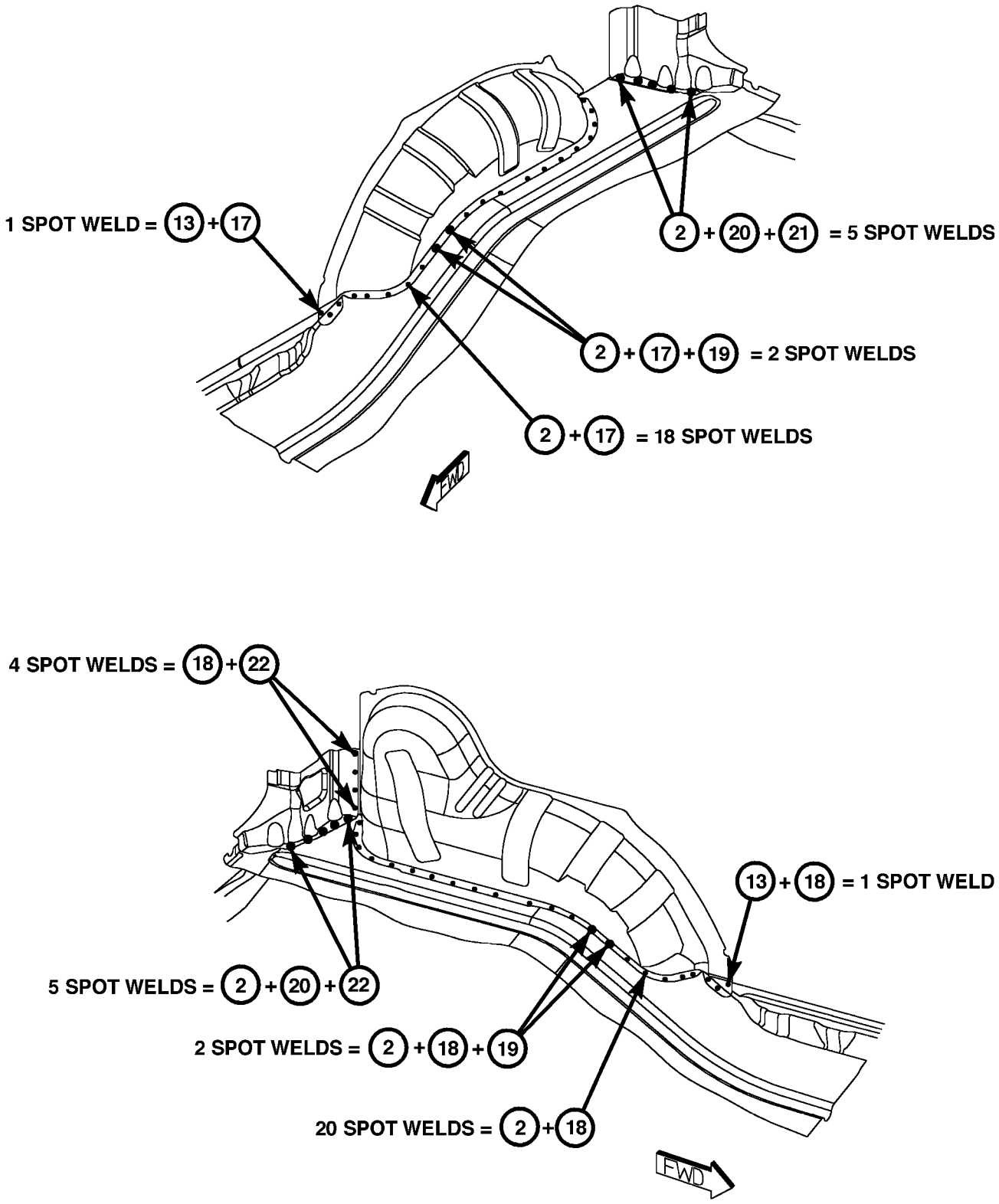

80cba676

Fig. 44 008 WHEELHOUSES – WELD LOCATIONS

WELD AND STRUCTURAL ADHESIVE LOCATIONS (Continued)

BODY SIDE PANELS AND SUB ASSEMBLIES

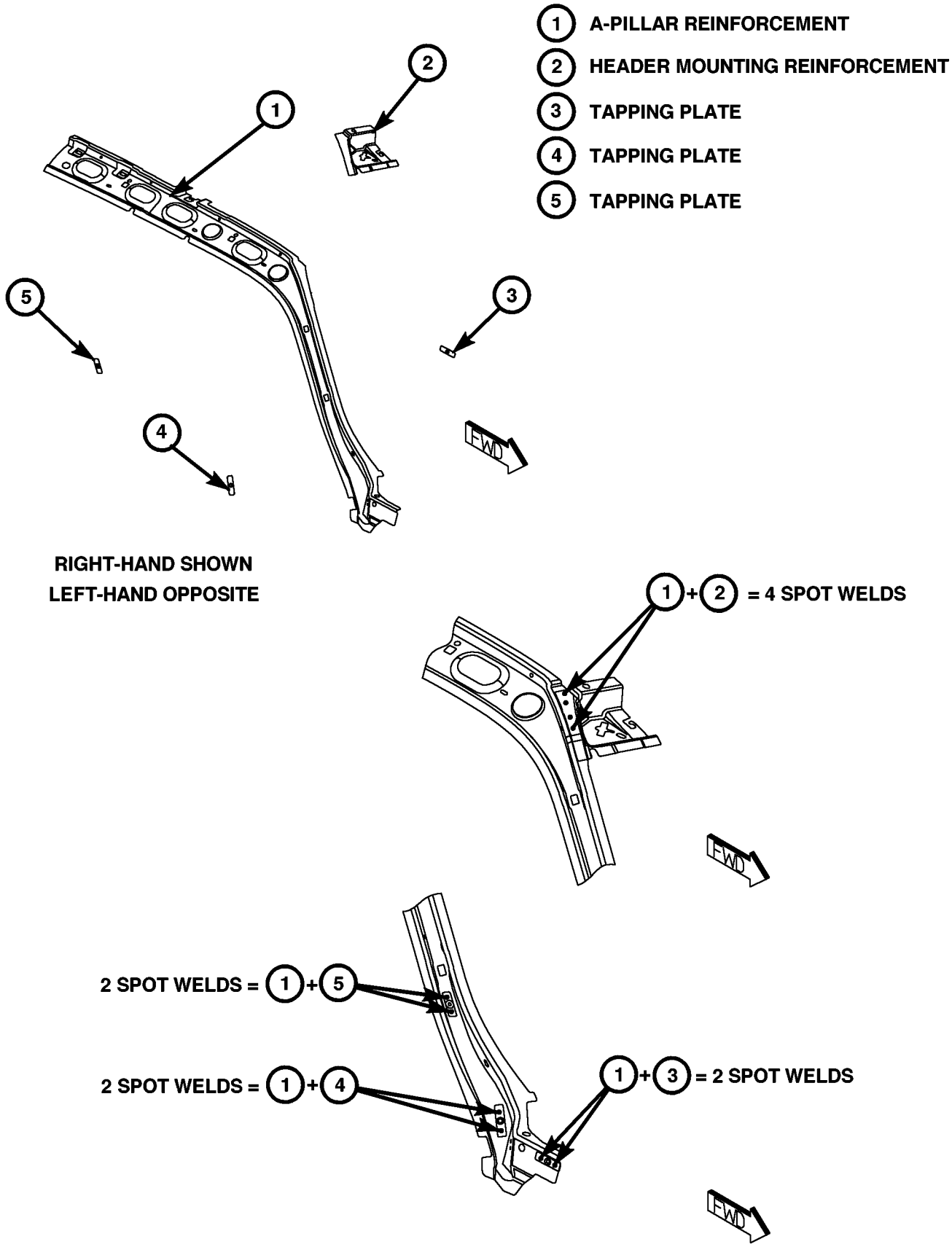

Fig. 45 A-PILLAR

WELD AND STRUCTURAL ADHESIVE LOCATIONS (Continued)

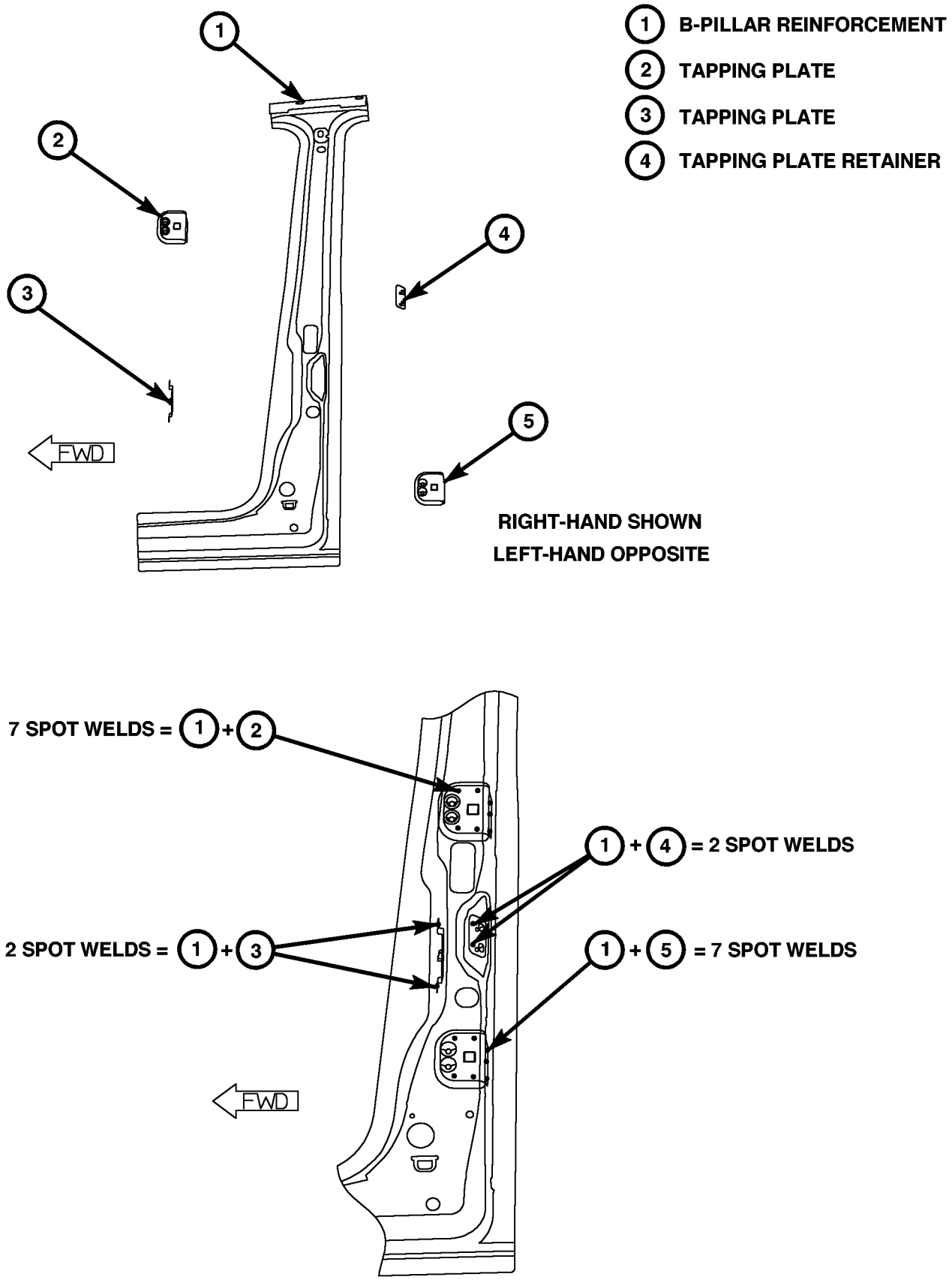

Fig. 46 B-PILLAR

WELD AND STRUCTURAL ADHESIVE LOCATIONS (Continued)

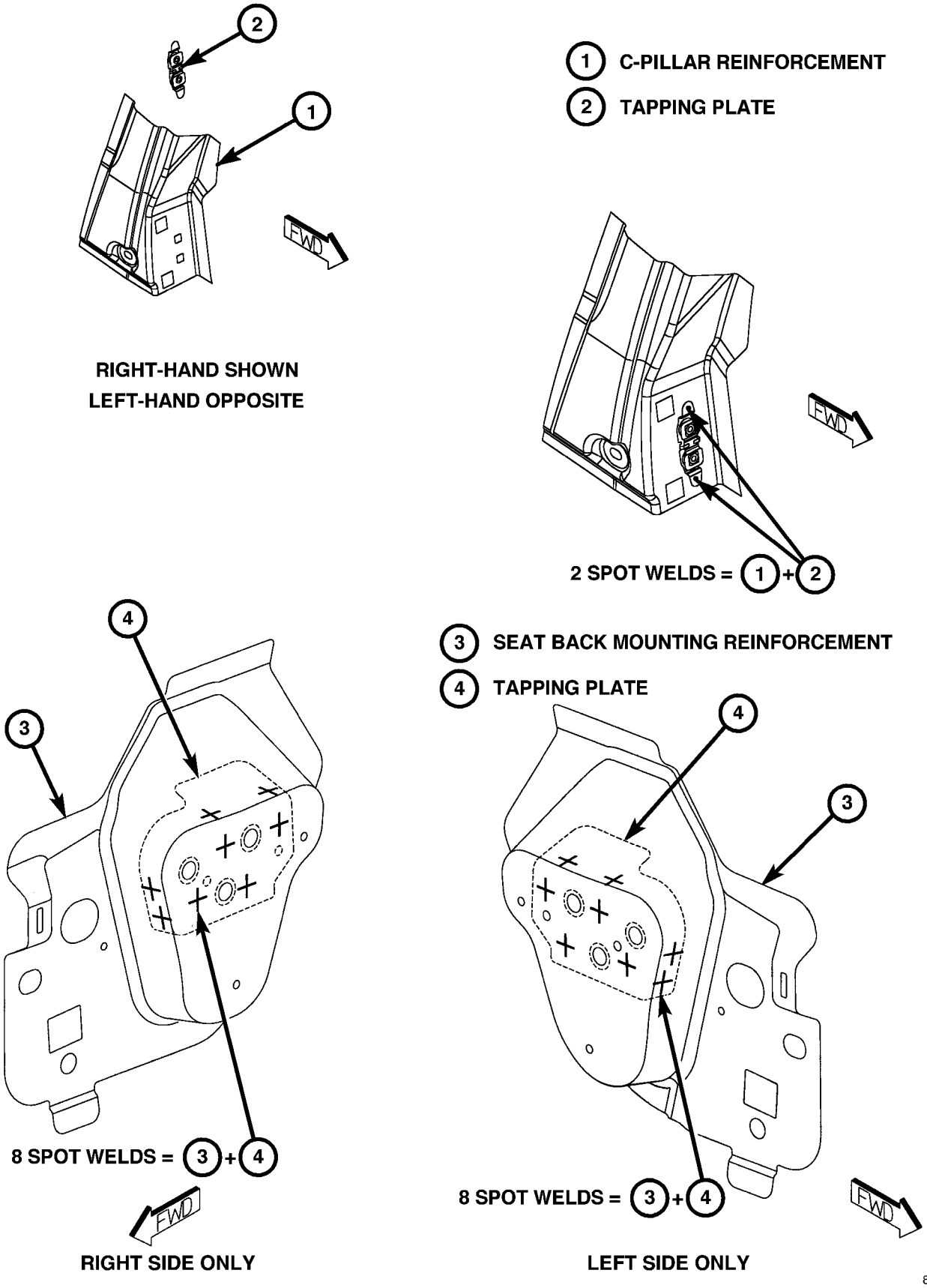

Fig. 47 009 C-PILLAR

WELD AND STRUCTURAL ADHESIVE LOCATIONS (Continued)

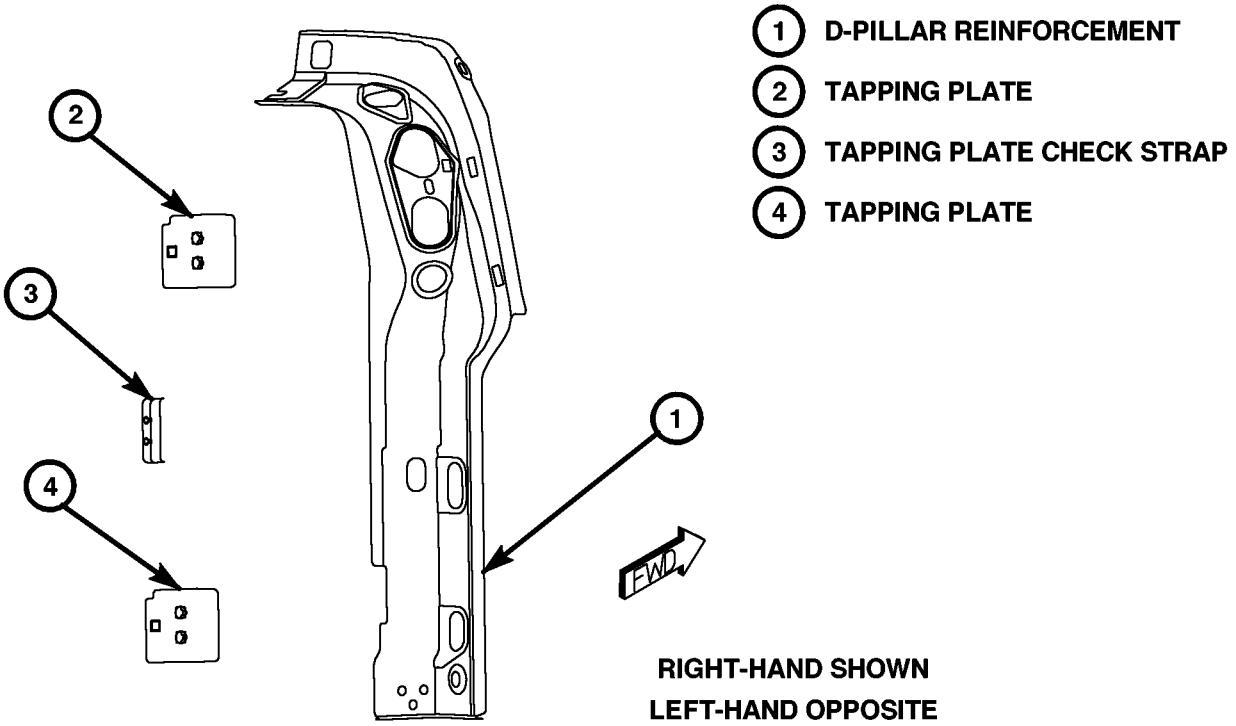

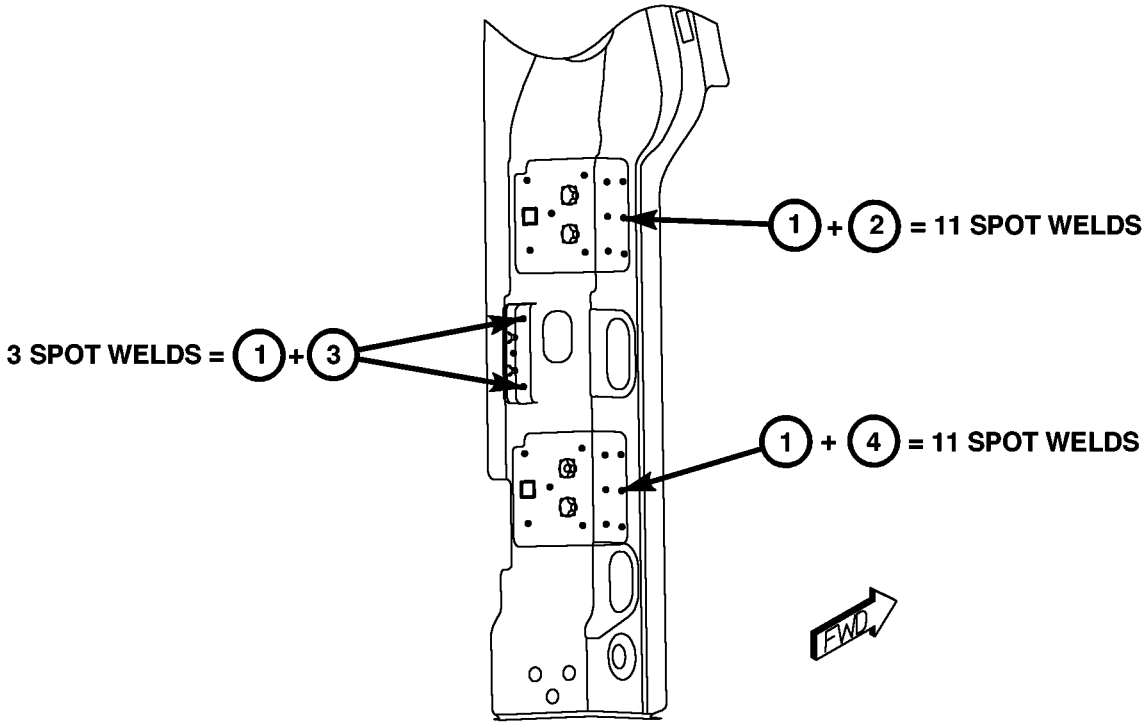

Fig. 48 D-PILLAR

WELD AND STRUCTURAL ADHESIVE LOCATIONS (Continued)

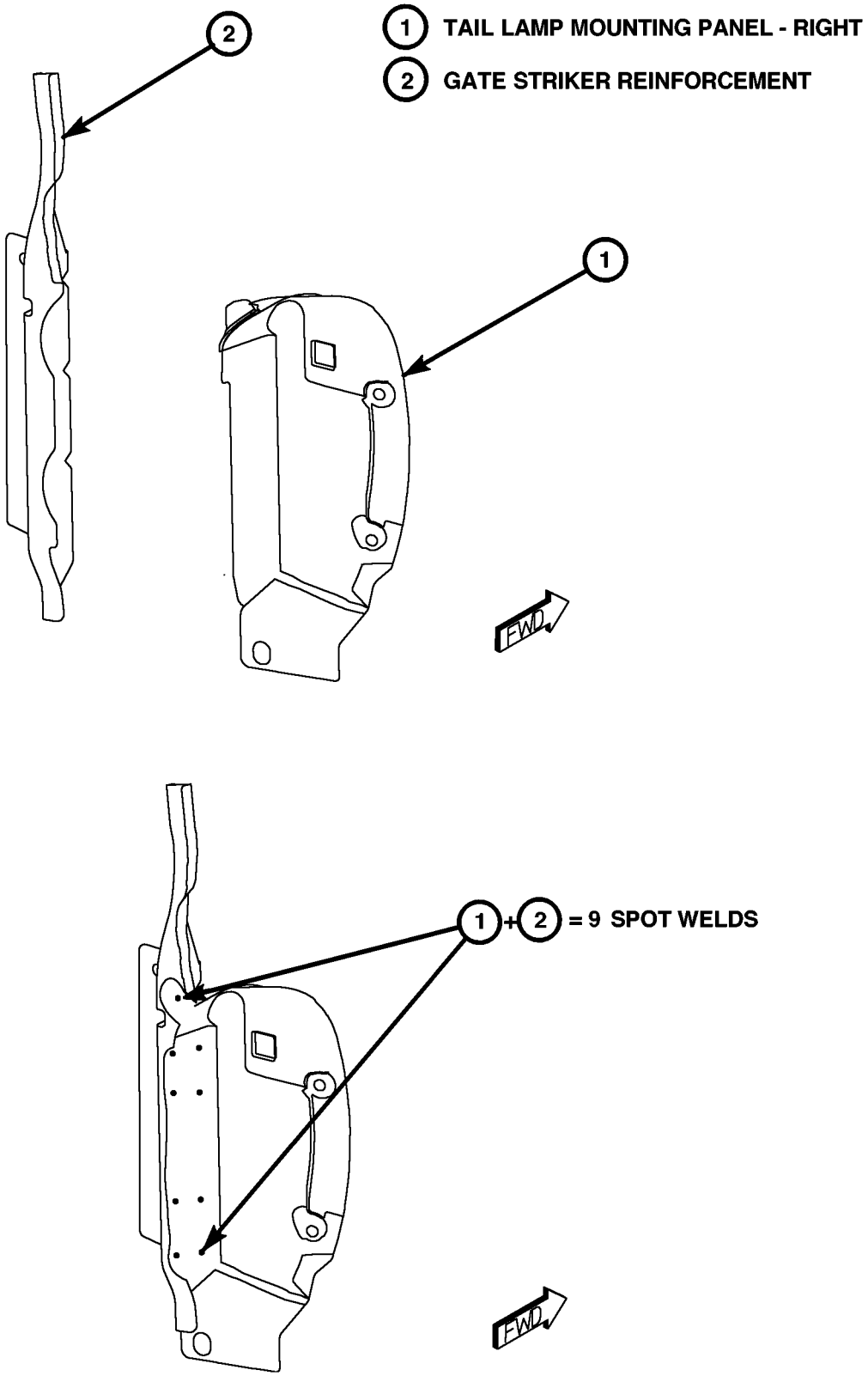

80fbf5a2

Fig. 49 TAIL LAMP MOUNTING PANEL

WELD AND STRUCTURAL ADHESIVE LOCATIONS (Continued)

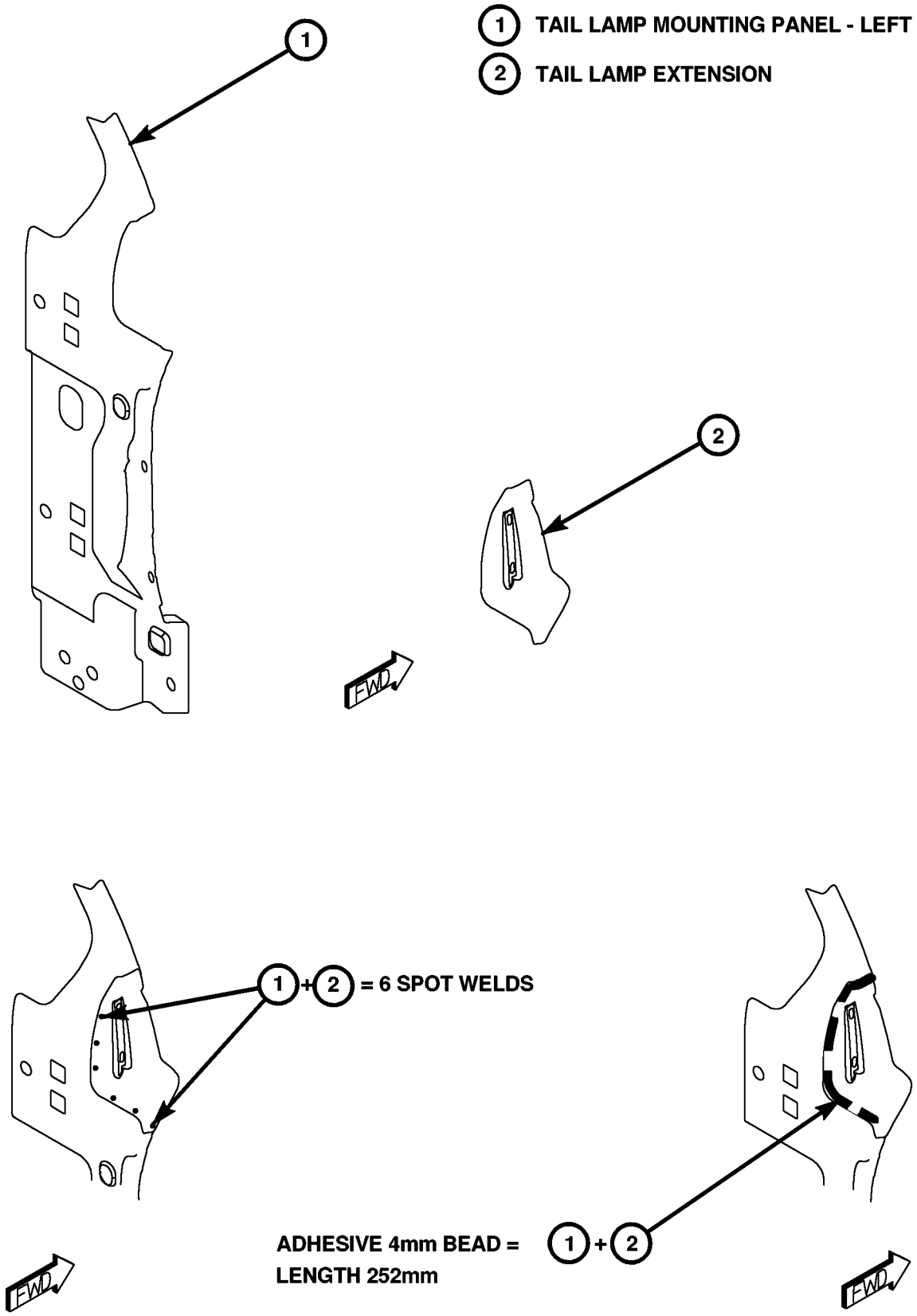

Fig. 50 TAIL LAMP MOUNTING PANEL

WELD AND STRUCTURAL ADHESIVE LOCATIONS (Continued)

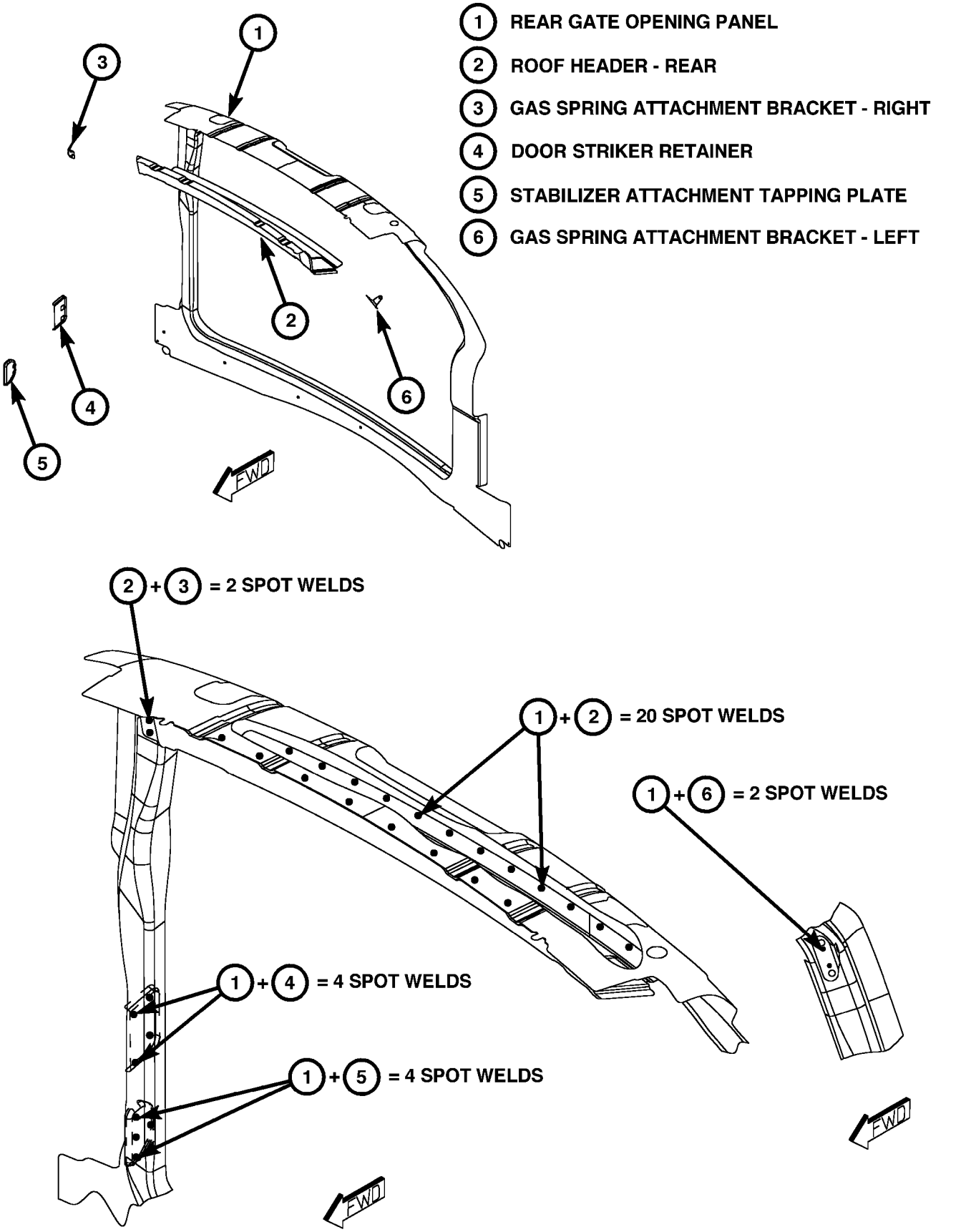

Fig. 51 010 SWING GATE OPENING

WELD AND STRUCTURAL ADHESIVE LOCATIONS (Continued)

BODY SIDE PANELS

1. BODY SIDE OUTER PANEL
2. BODY SIDE INNER PANEL
3. INNER FENDER REINFORCEMENT ASSEMBLY
4. A-PILLAR REINFORCEMENT
5. BODY SIDE INNER LOWER REINFORCEMENT
6. B-PILLAR REINFORCEMENT
7. CHECK STRAP ATTACHMENT TAPING PLATE
8. DOOR HINGE TAPPING PLATE
9. B-PILLAR LOWER BAFFLE
10. SHOULDER BELT REINFORCEMENT
11. OUTER REAR WHEELHOUSE
12. SILL MOLDING ATTACH BRACKET
13. C-PILLAR LOWER BAFFLE
14. SEAT BACK ATTACH REINFORCEMENT
15. C-PILLAR REINFORCEMENT
16. SEAT-SHOULDER BELT REINFORCEMENT
17. D-PILLAR REINFORCEMENT
18. TAIL LAMP PANEL ASSEMBLY
19. INNER FENDER REINFORCEMENT
20. HEADER MOUNTING REINFORCEMENT
21. GATE STRIKER REINFORCEMENT

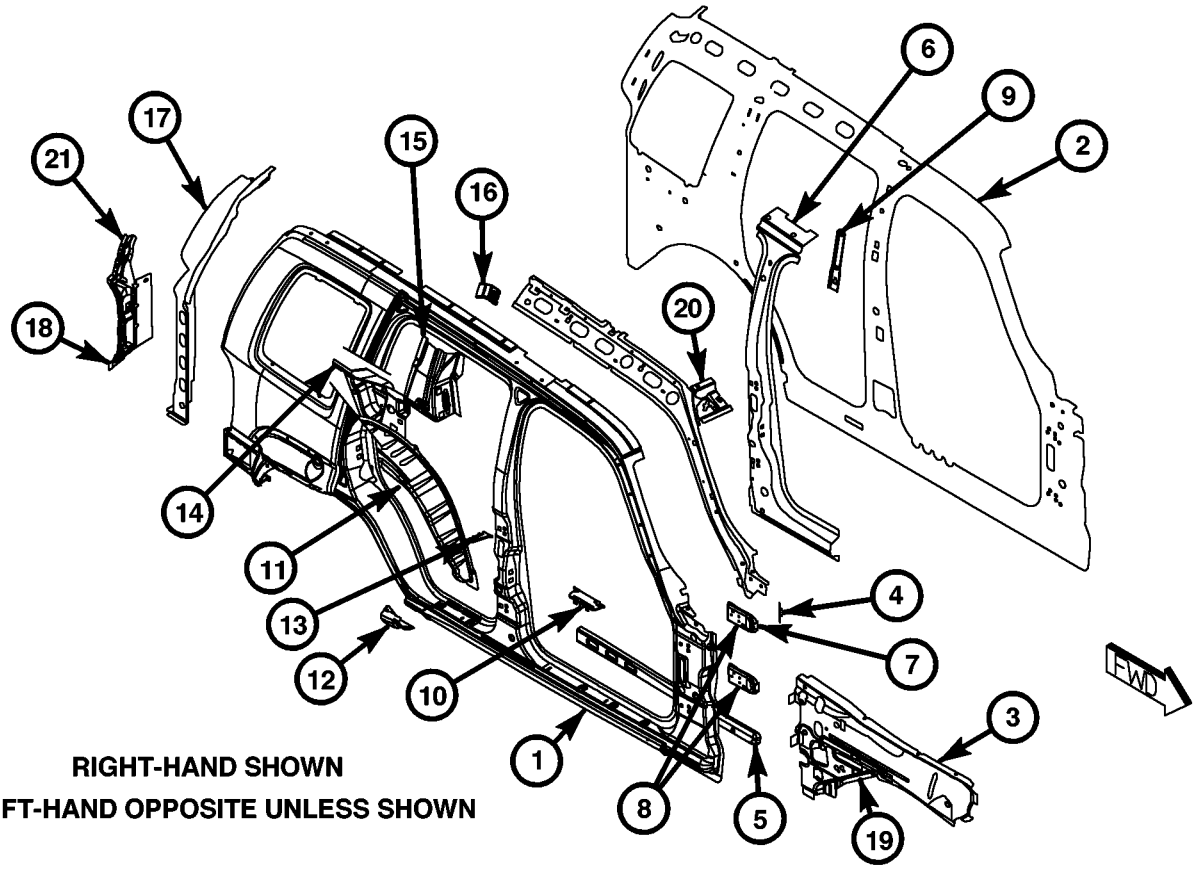

RIGHT-HAND SHOWN
LEFT-HAND OPPOSITE UNLESS SHOWN

NOTE
ITEM 19 IS PART OF THE INNER FENDER REINFORCEMENT ASSEMBLY
ITEM 20 IS PART OF THE A-PILLAR REINFORCEMENT ASSEMBLY
ITEM 21 IS PART OF THE TAIL LAMP MOUNTING PANEL ASSEMBLY

Fig. 52 BODY SIDE PANEL ASSEMBLY

WELD AND STRUCTURAL ADHESIVE LOCATIONS (Continued)

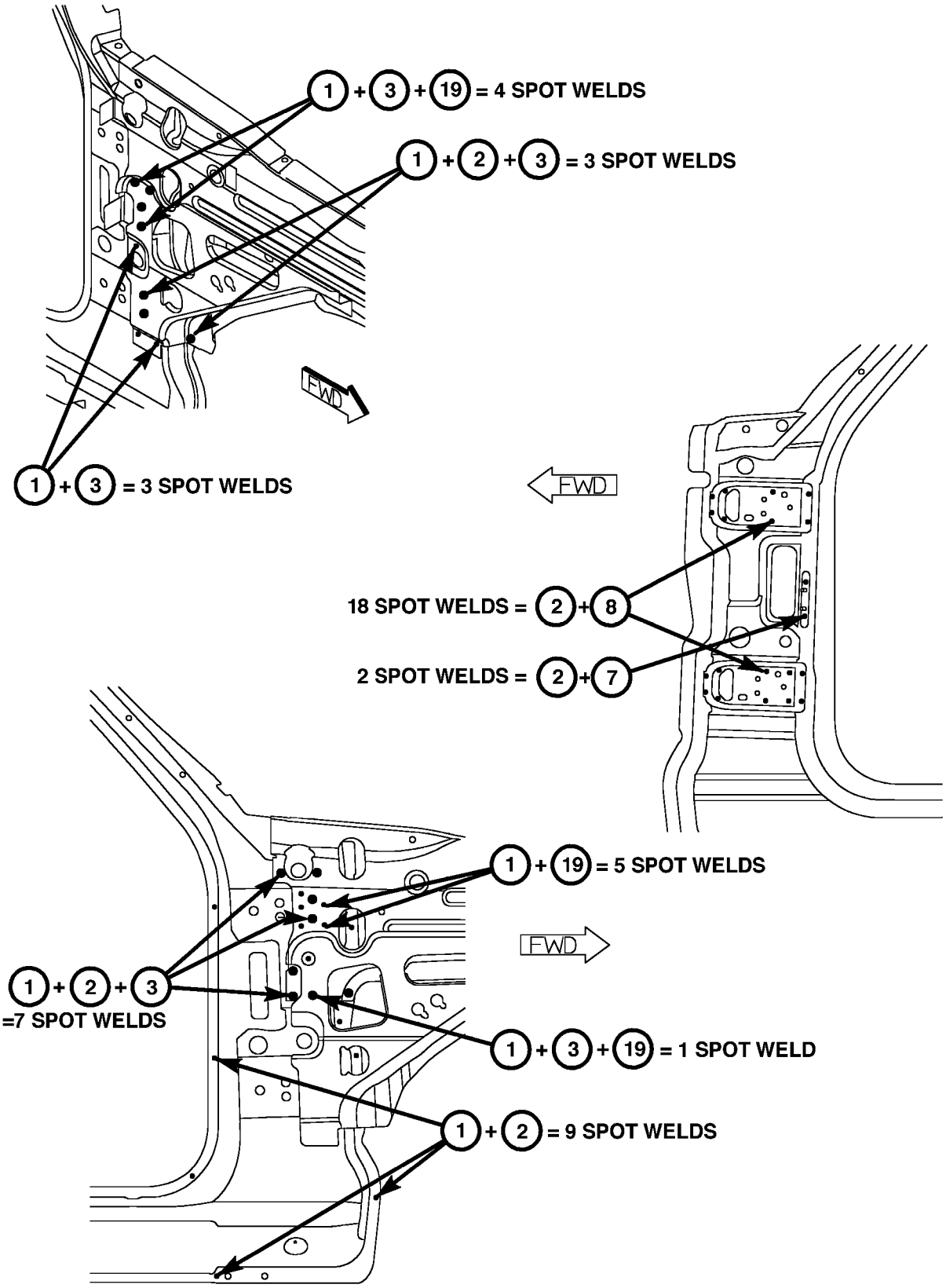

80ca9587

Fig. 53 011 FENDER REINFORCEMENT

WELD AND STRUCTURAL ADHESIVE LOCATIONS (Continued)

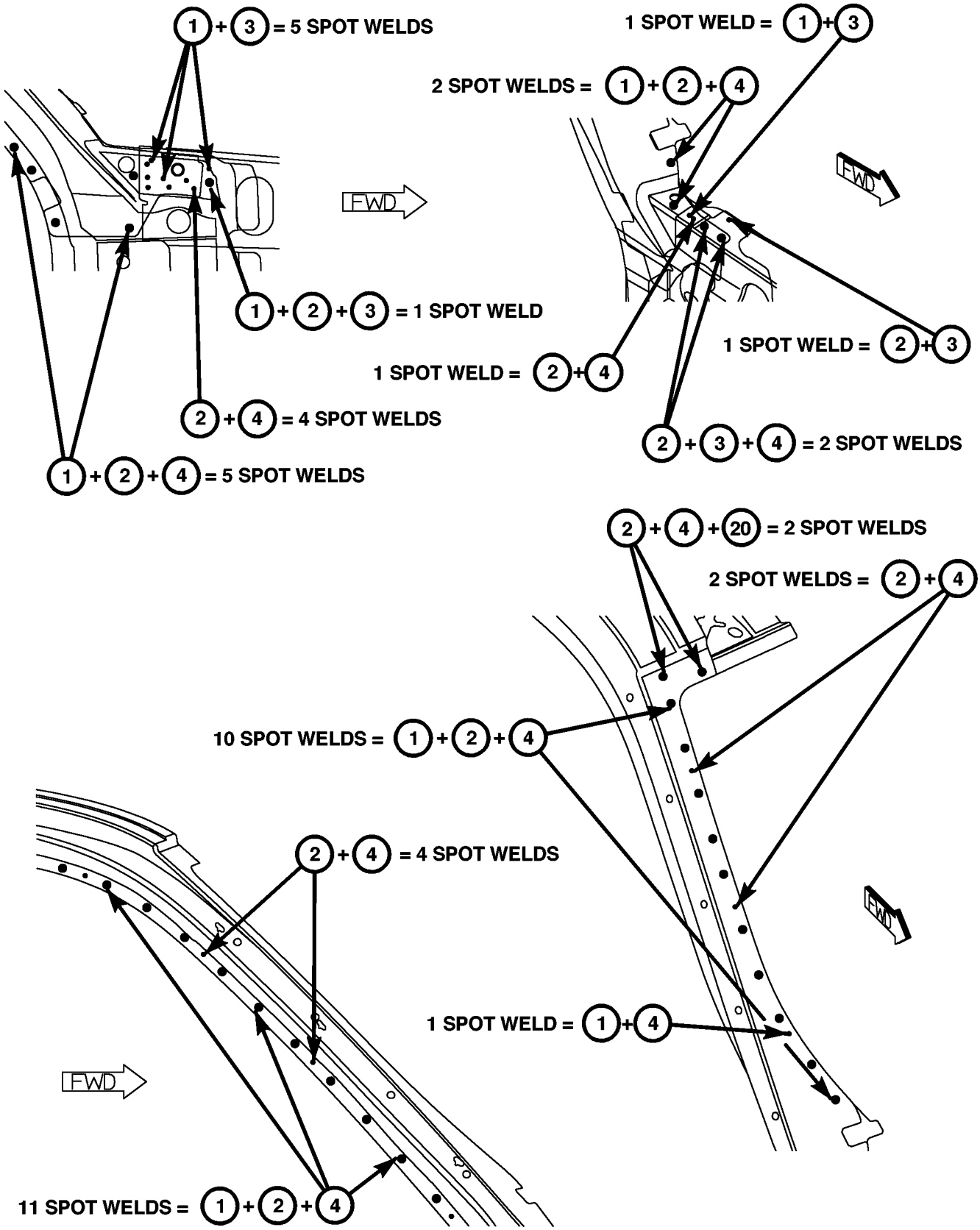

Fig. 54 A-PILLAR; FENDER REINFORCEMENT

WELD AND STRUCTURAL ADHESIVE LOCATIONS (Continued)

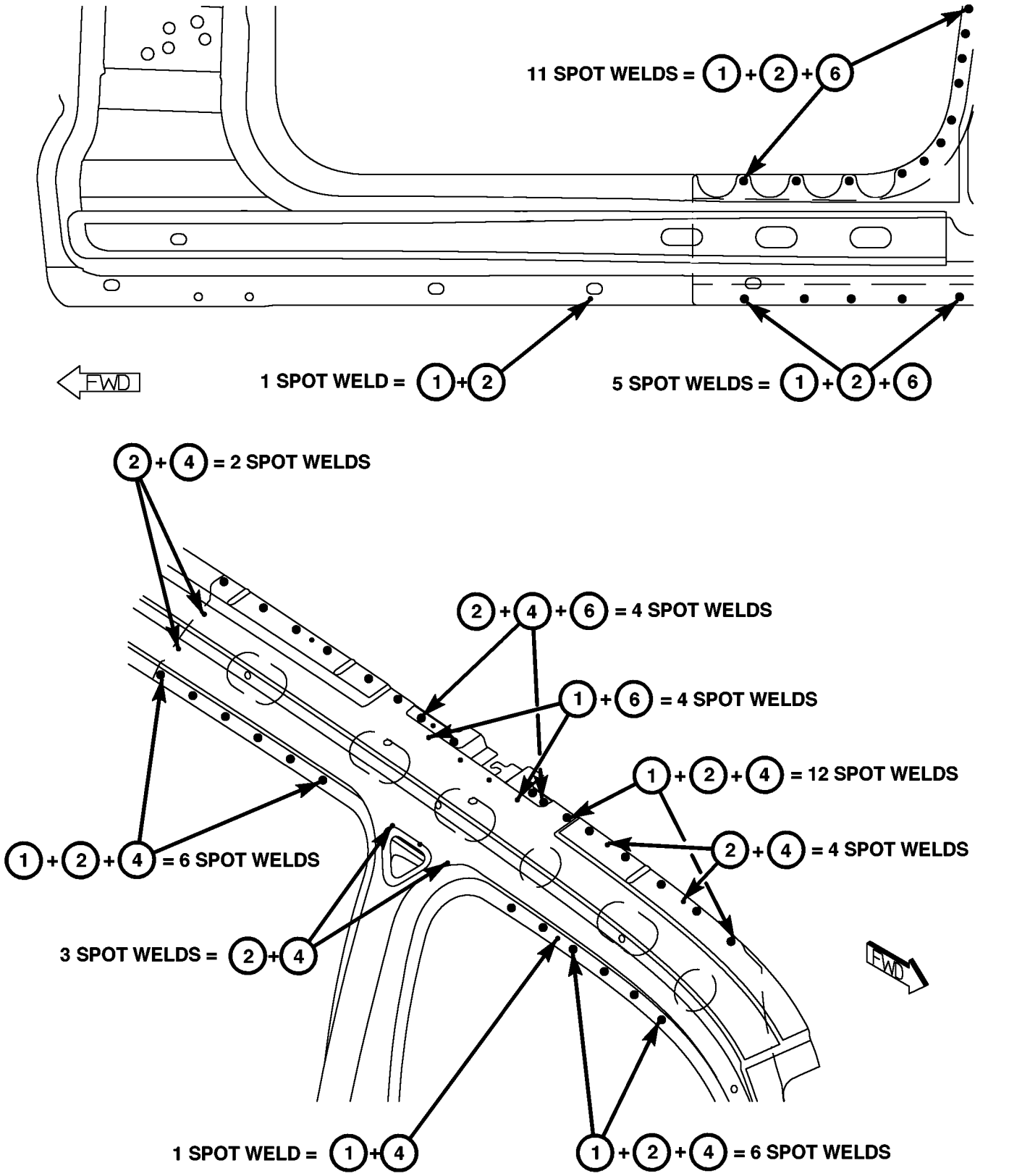

Fig. 55 UPPER AND LOWER BODY SIDE PANEL

WELD AND STRUCTURAL ADHESIVE LOCATIONS (Continued)

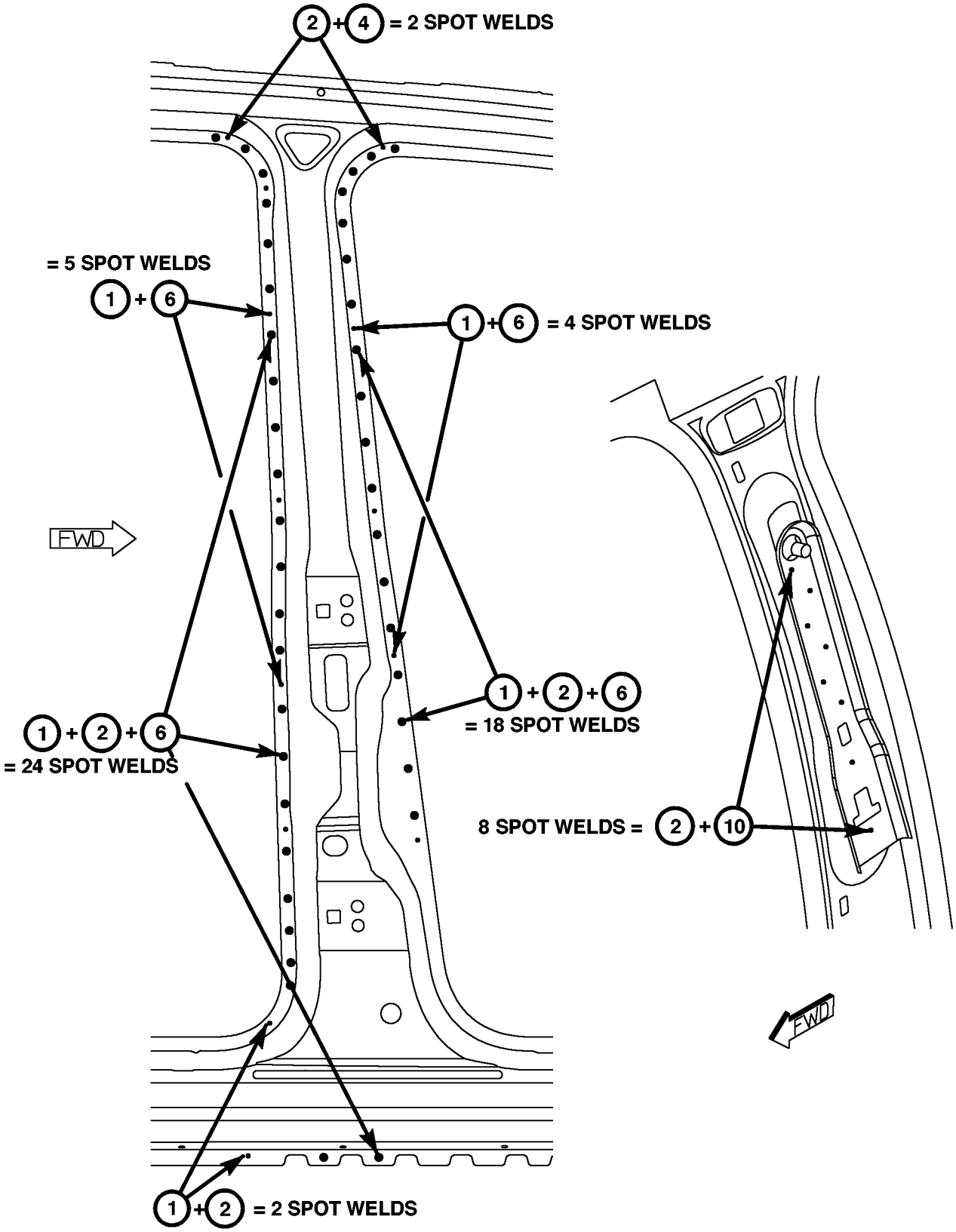

Fig. 56 B-PILLAR

WELD AND STRUCTURAL ADHESIVE LOCATIONS (Continued)

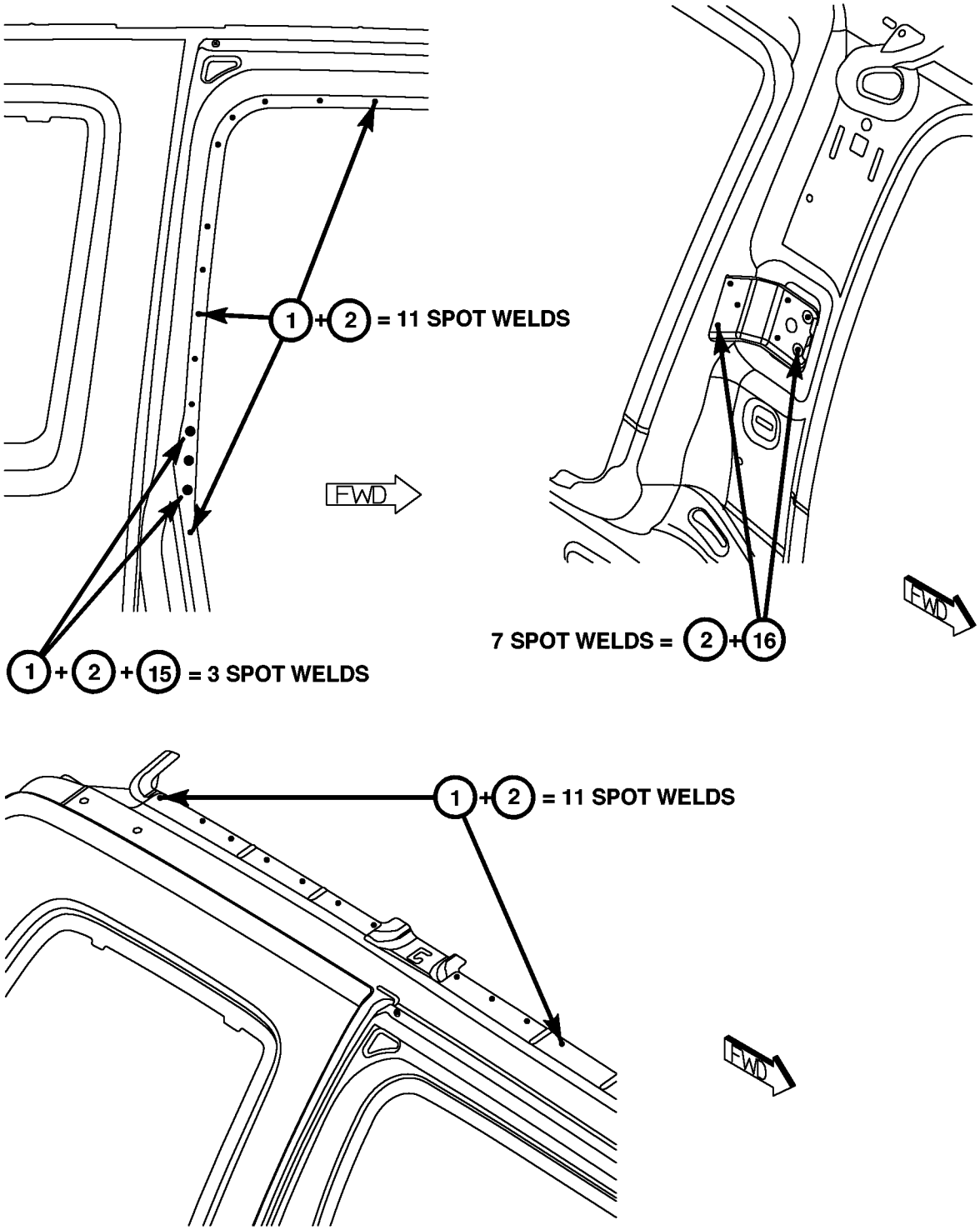

Fig. 57 C-PILLAR

WELD AND STRUCTURAL ADHESIVE LOCATIONS (Continued)

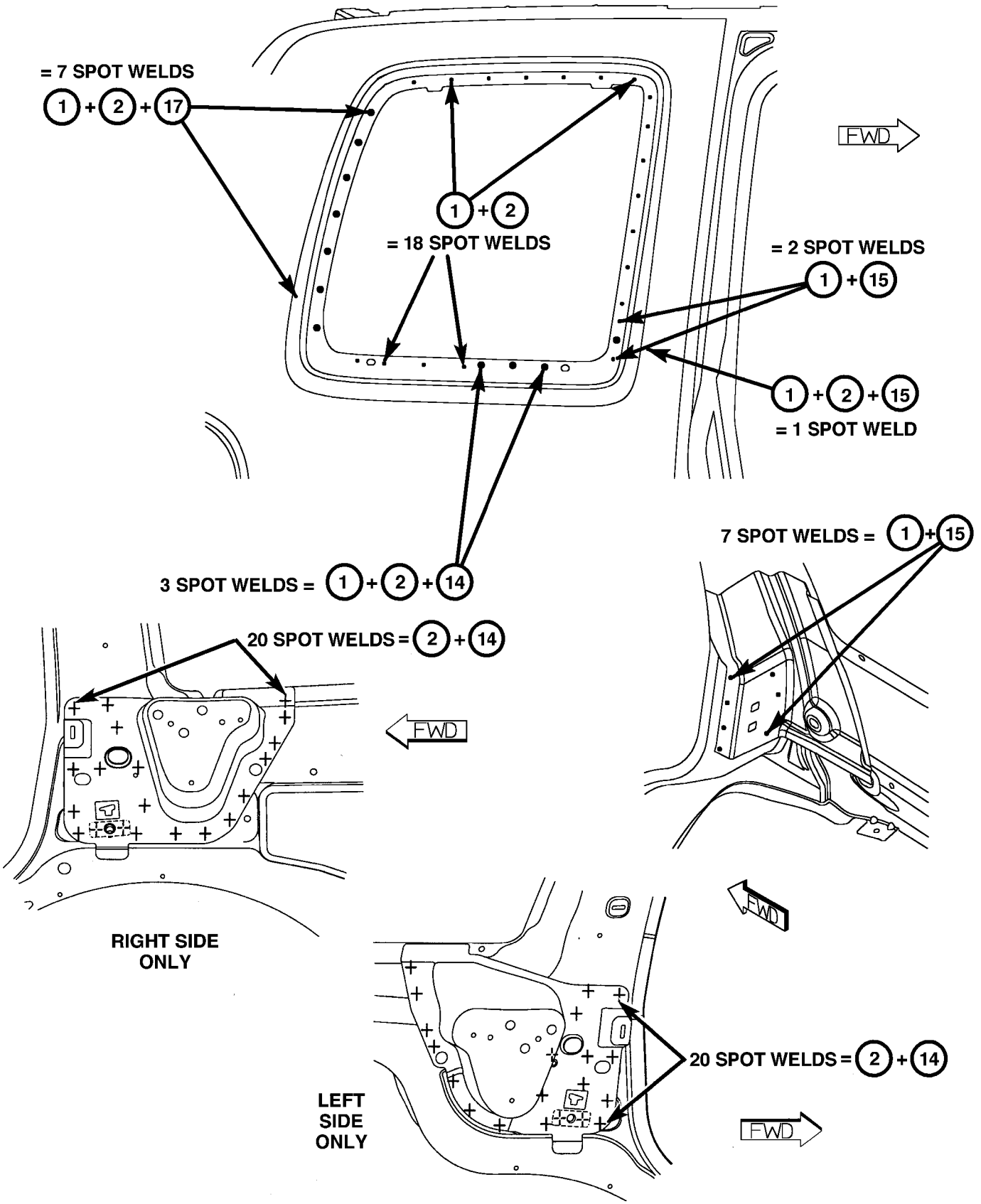

80ca95b4

Fig. 58 012 QUARTER WINDOW OPENING

WELD AND STRUCTURAL ADHESIVE LOCATIONS (Continued)

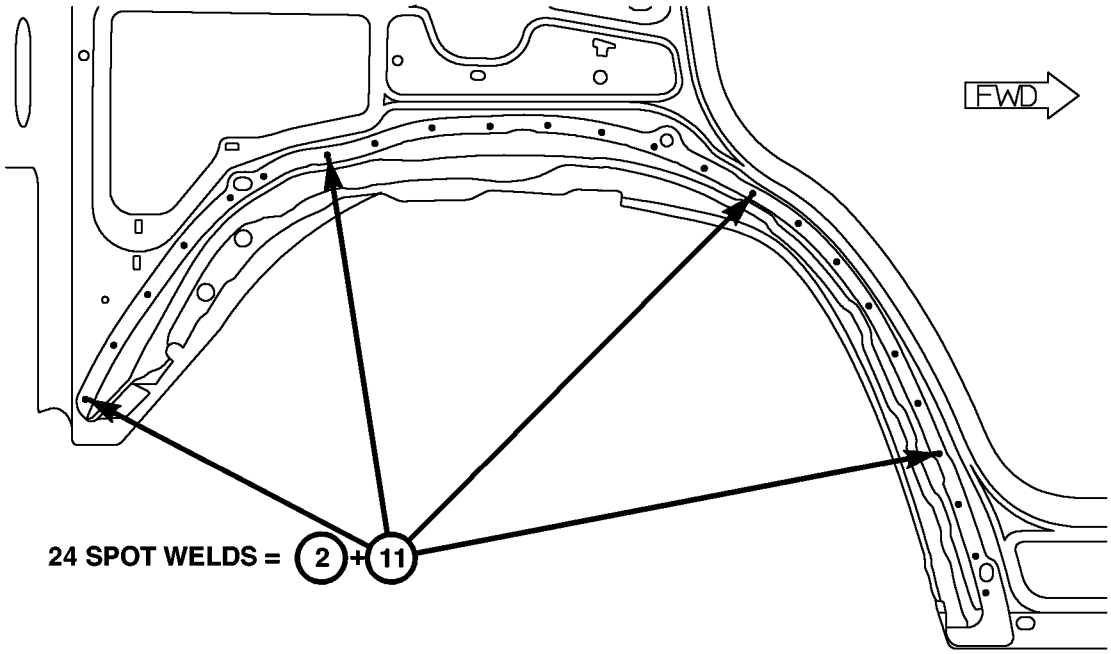

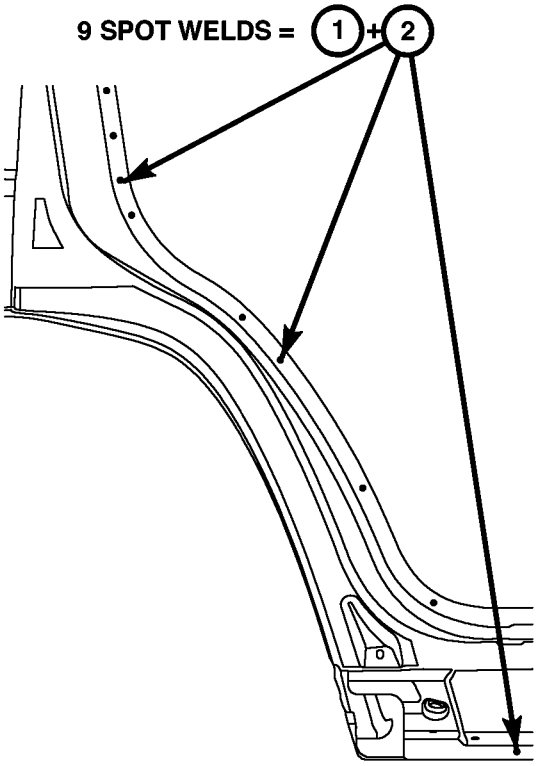

FWD

80fbf5c7

Fig. 59 OUTER REAR WHEELHOUSE

WELD AND STRUCTURAL ADHESIVE LOCATIONS (Continued)

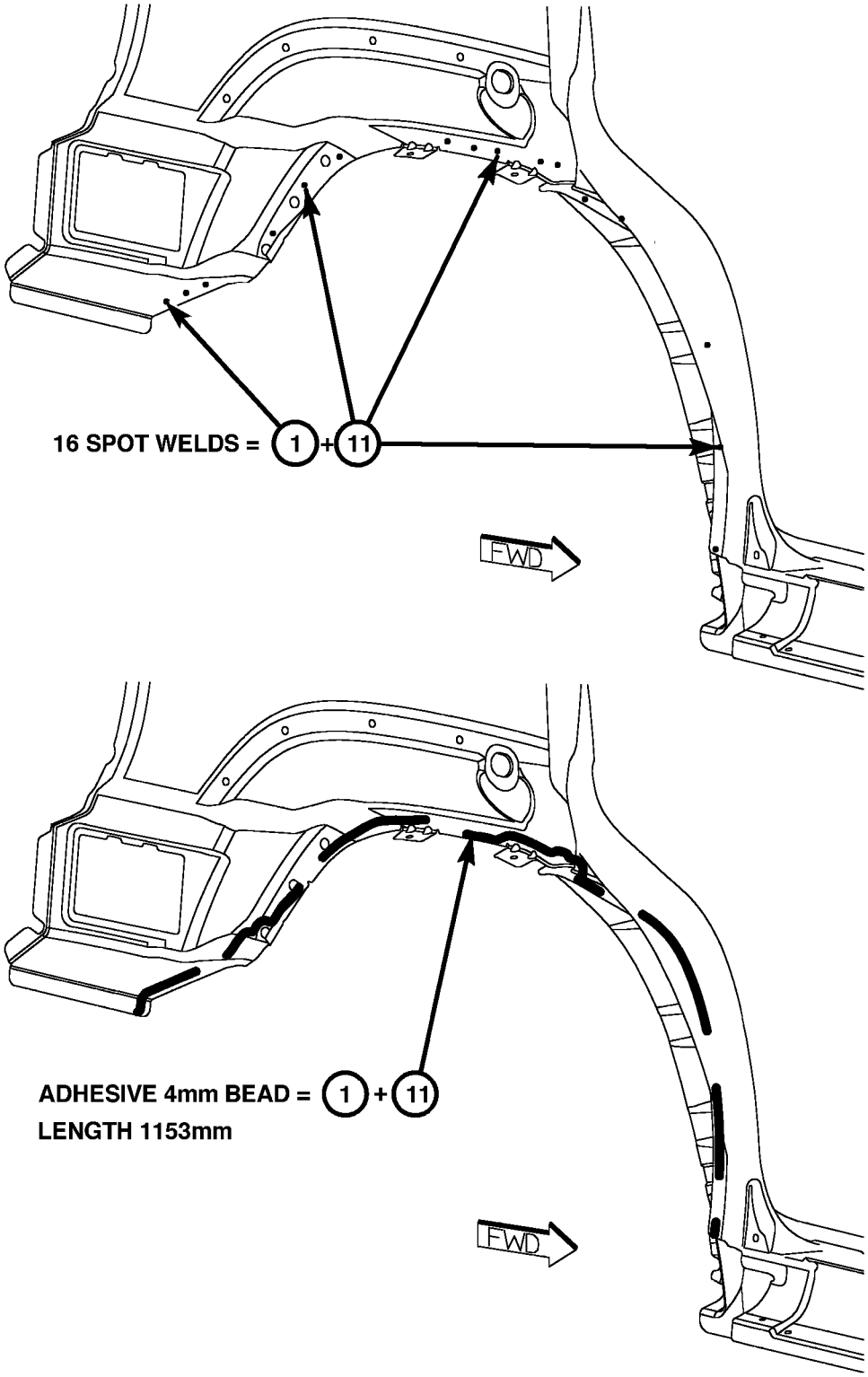

80ca95cc

Fig. 60 013 OUTER REAR WHEELHOUSE

WELD AND STRUCTURAL ADHESIVE LOCATIONS (Continued)

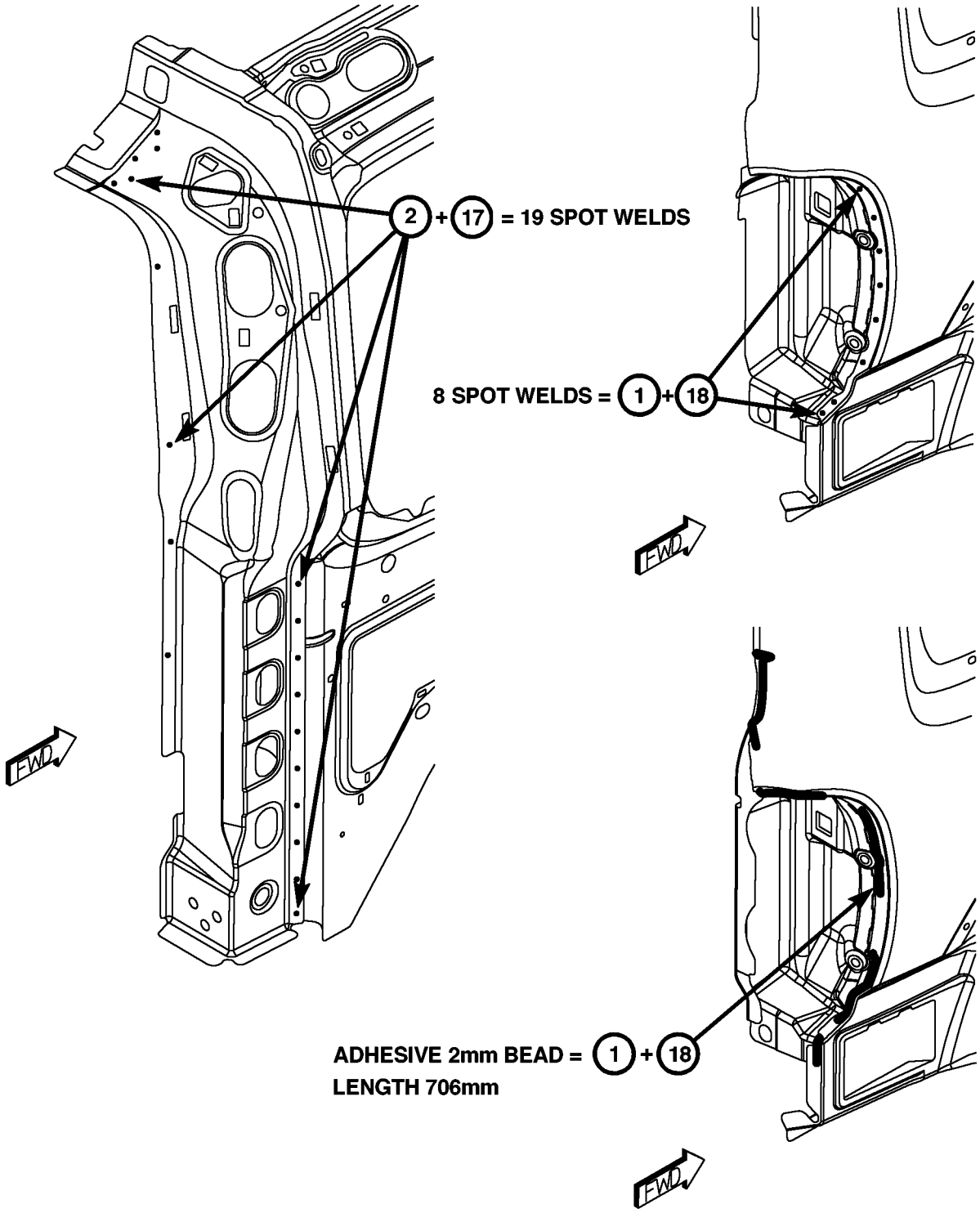

Fig. 61 D-PILLAR

WELD AND STRUCTURAL ADHESIVE LOCATIONS (Continued)

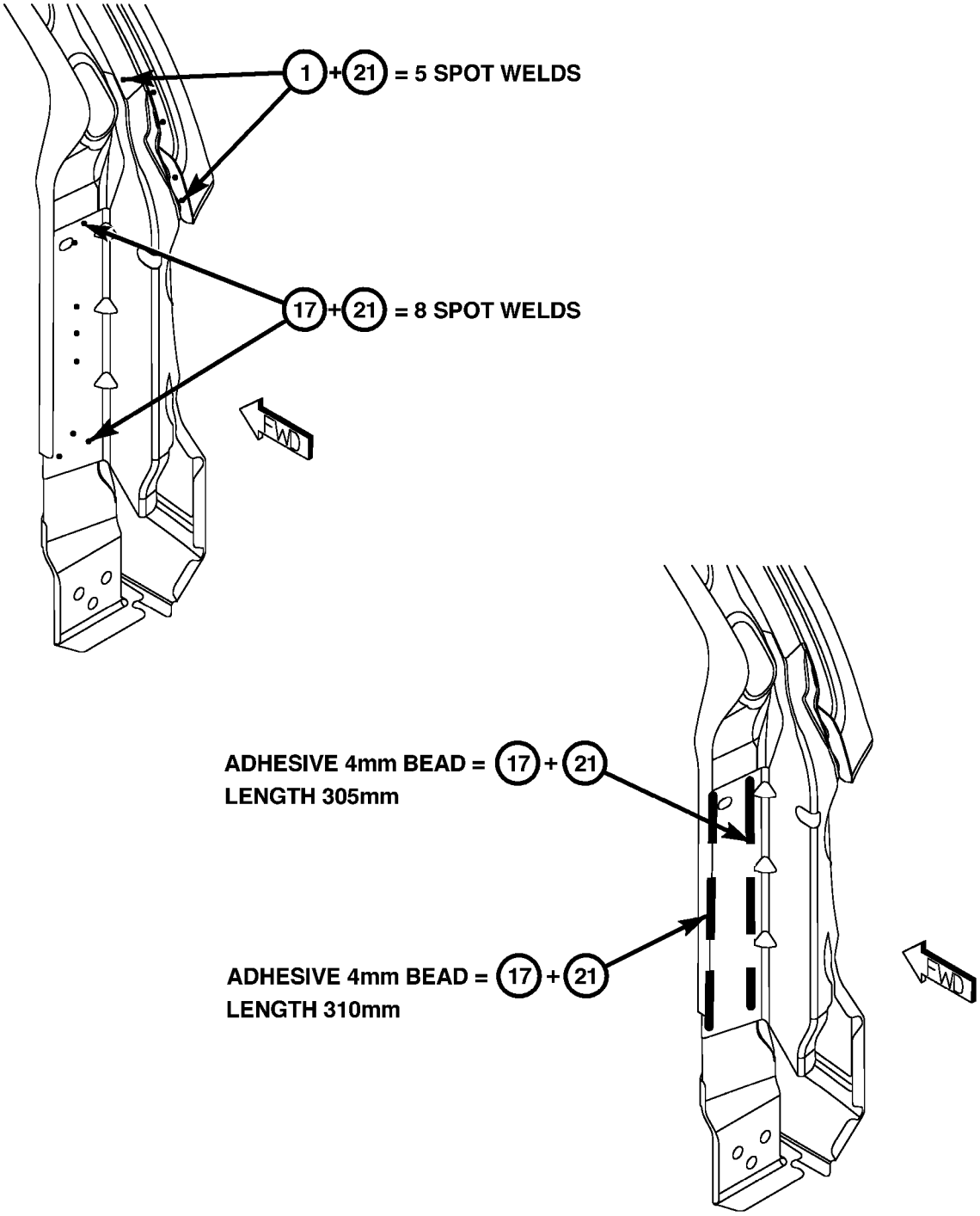

80ca95e5

Fig. 62 014 SWING GATE STRIKER REINFORCEMENT

WELD AND STRUCTURAL ADHESIVE LOCATIONS (Continued)

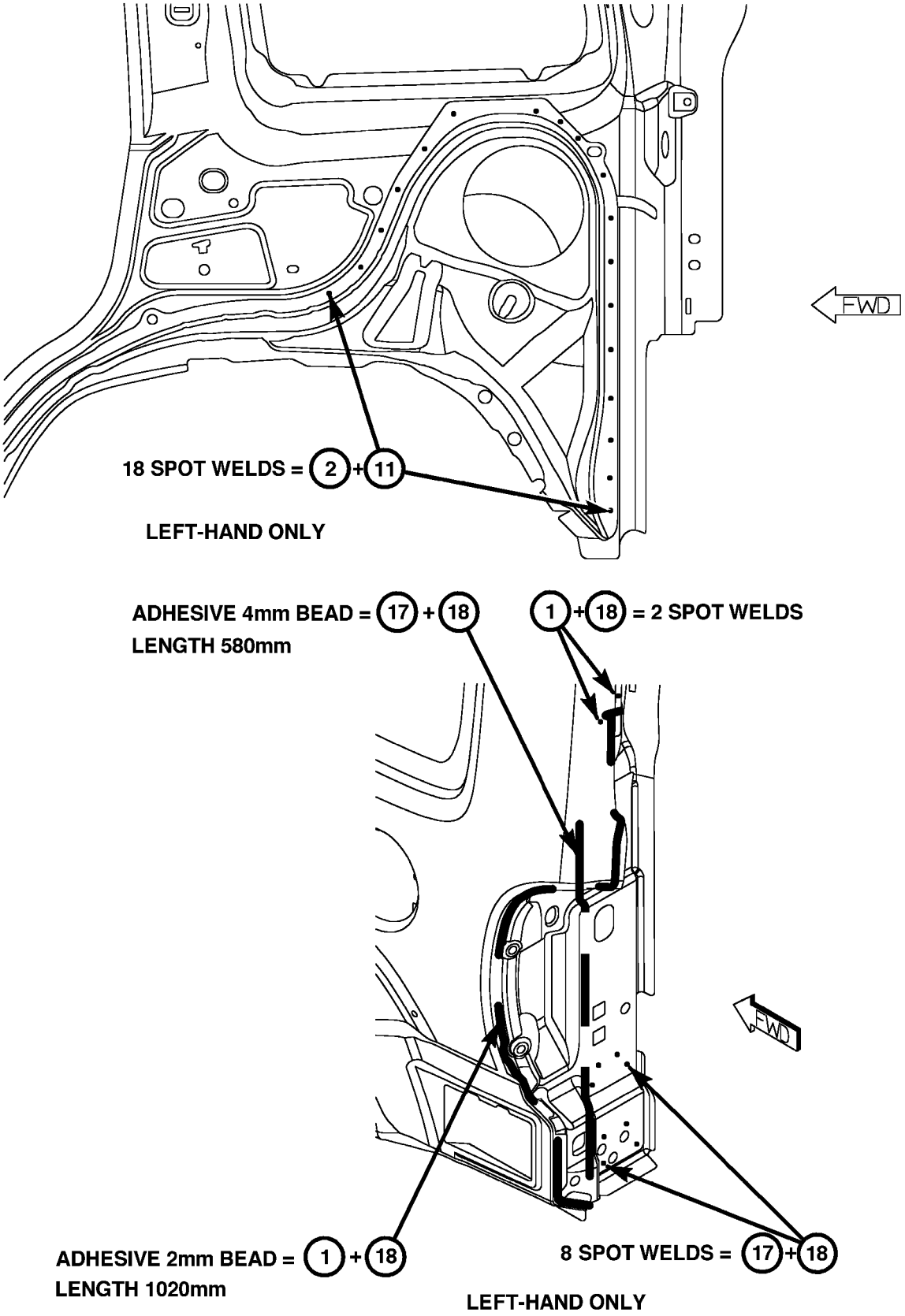

Fig. 63 015 REAR WHEELHOUSE AND TAIL LAMP

WELD AND STRUCTURAL ADHESIVE LOCATIONS (Continued)

FENDER ASSEMBLIES

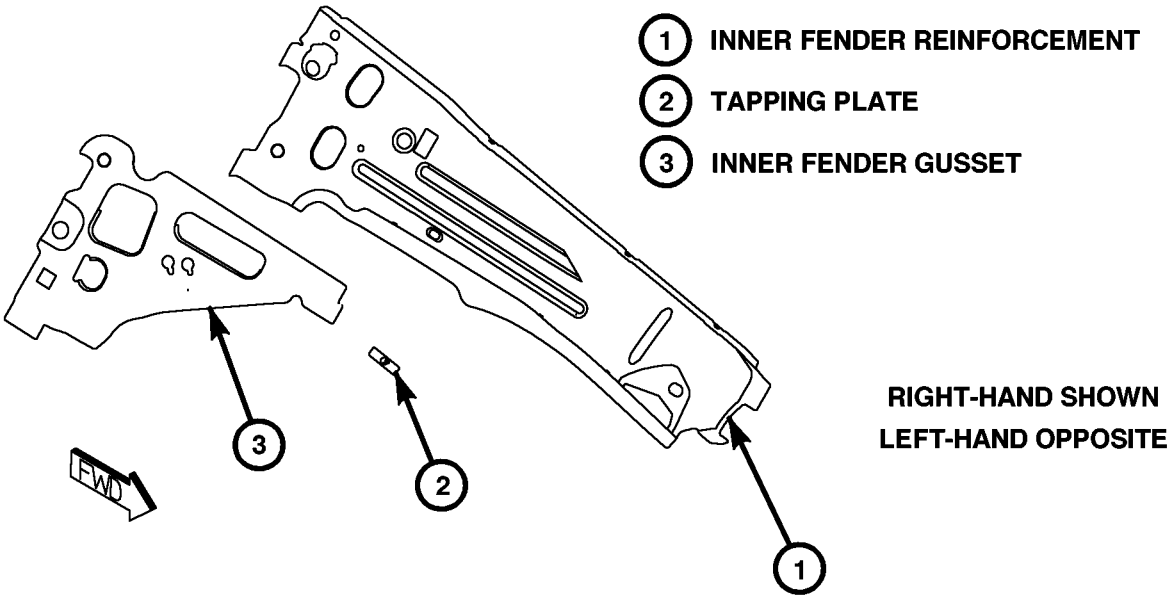

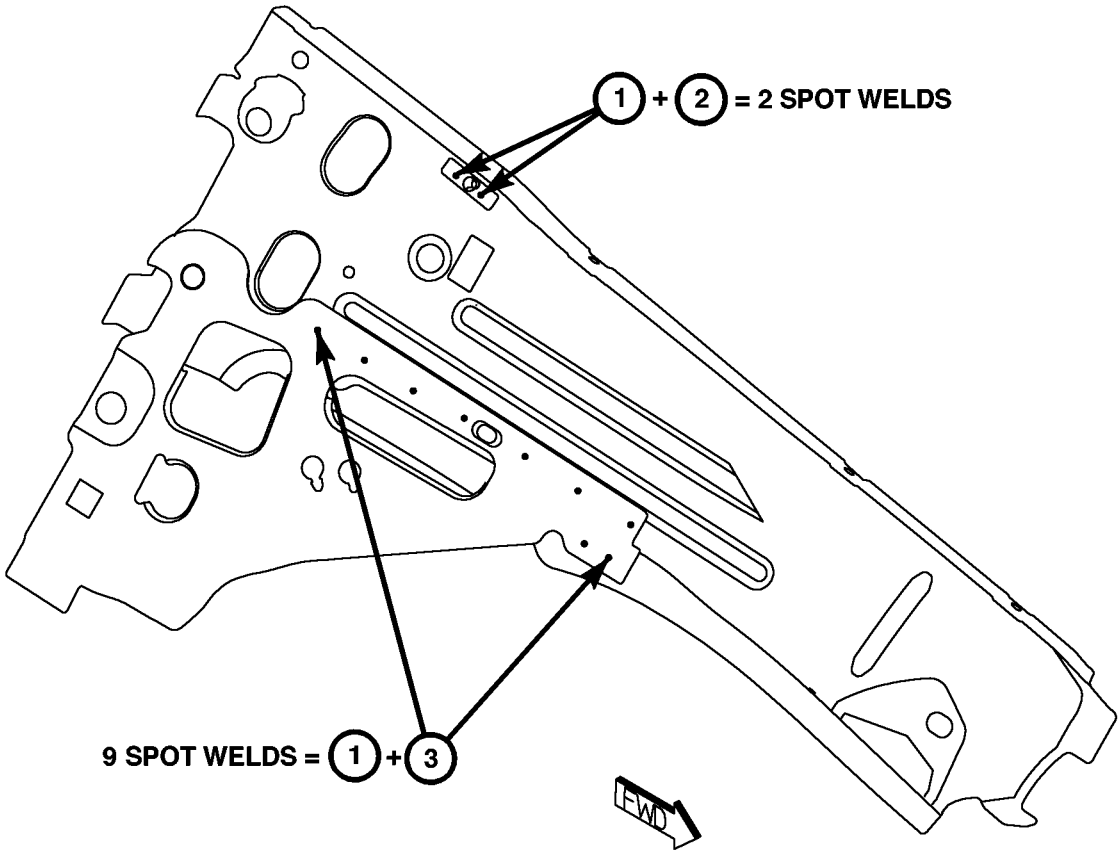

Fig. 64 FENDERS

WELD AND STRUCTURAL ADHESIVE LOCATIONS (Continued)

1. INNER FRONT WHEELHOUSE
2. INNER FENDER REINFORCEMENT
3. INNER FENDER PANEL
4. RADIATOR SUPPORT BRACKET
5. INNER FRONT FENDER GUSSET
6. PLENUM CLOSURE
7. PLENUM BAFFLE
8. BODY SIDE INNER PANEL
9. A-PILLAR REINFORCEMENT
10. PLENUM LOWER PANEL
11. BODY SIDE OUTER PANEL
12. COWL SIDE PANEL

NOTE

ITEMS 3,5,8,9 AND 11 ARE PARTS OF THE BODY SIDE COMPLETE ASSEMBLY

ITEMS 1,2,4,6,7,10 AND 12 ARE PARTS OF THE UNDERBODY COMPLETE ASSEMBLY

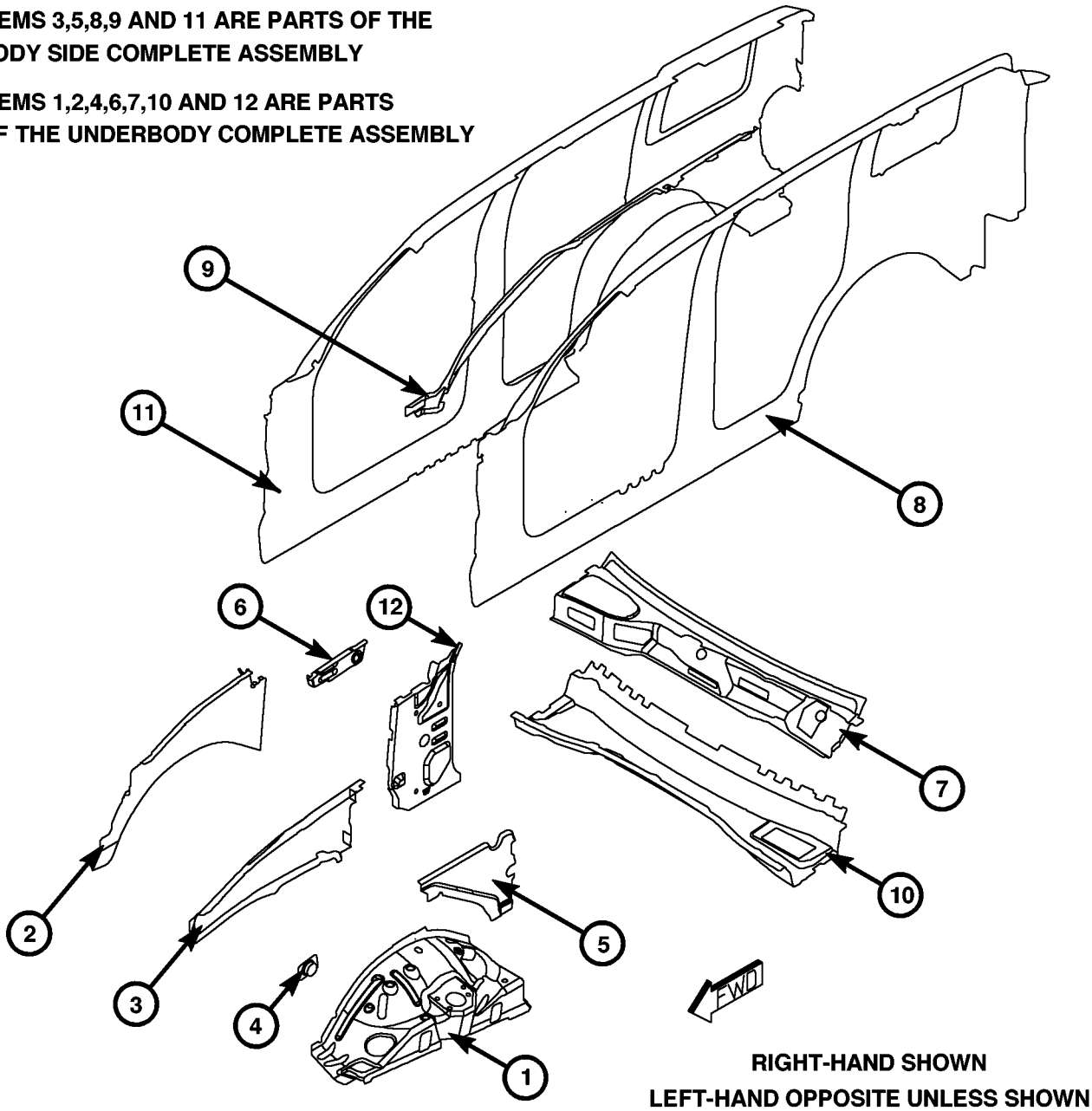

Fig. 65 FENDER ASSEMBLY

WELD AND STRUCTURAL ADHESIVE LOCATIONS (Continued)

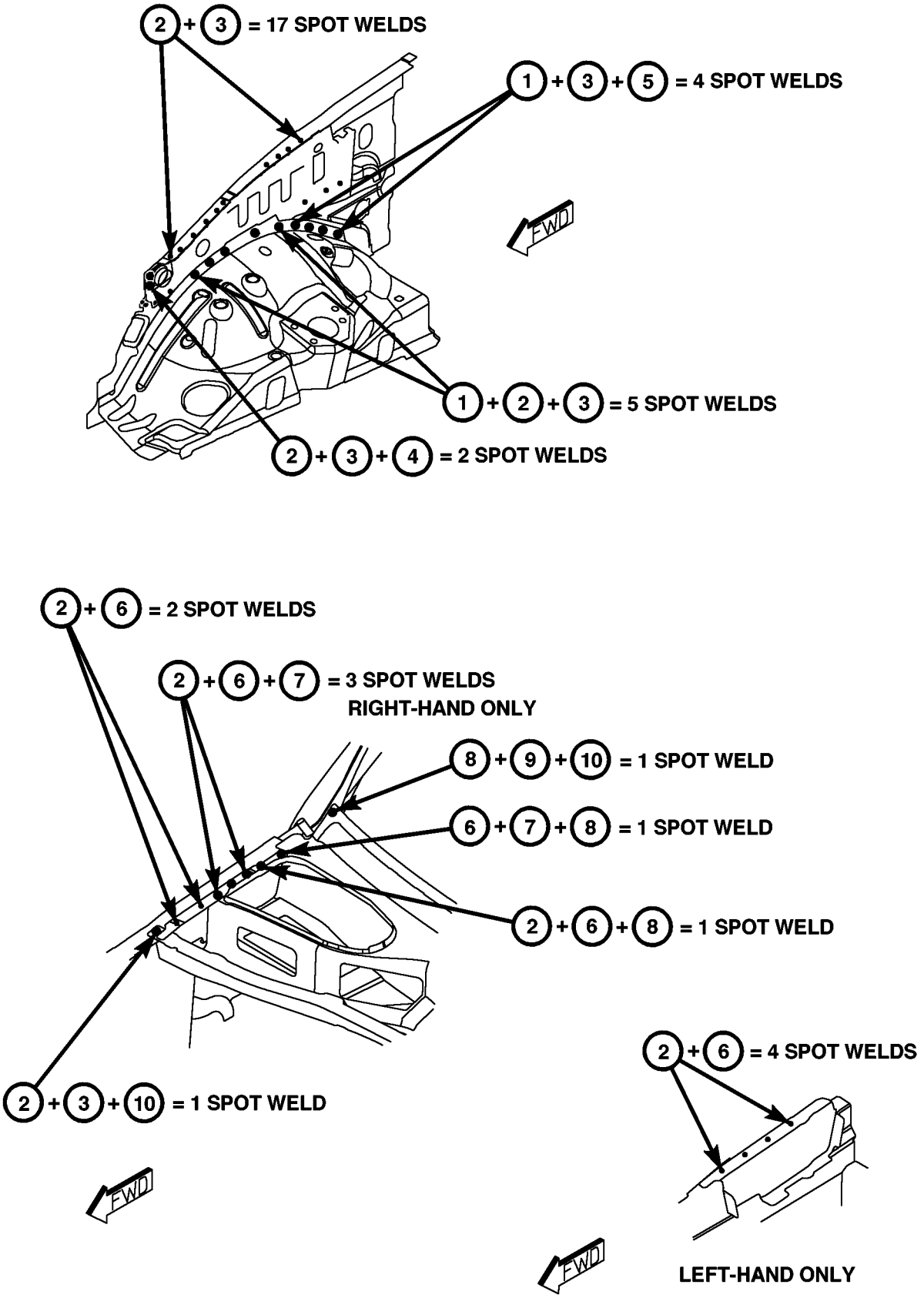

Fig. 66 INNER FENDER

WELD AND STRUCTURAL ADHESIVE LOCATIONS (Continued)

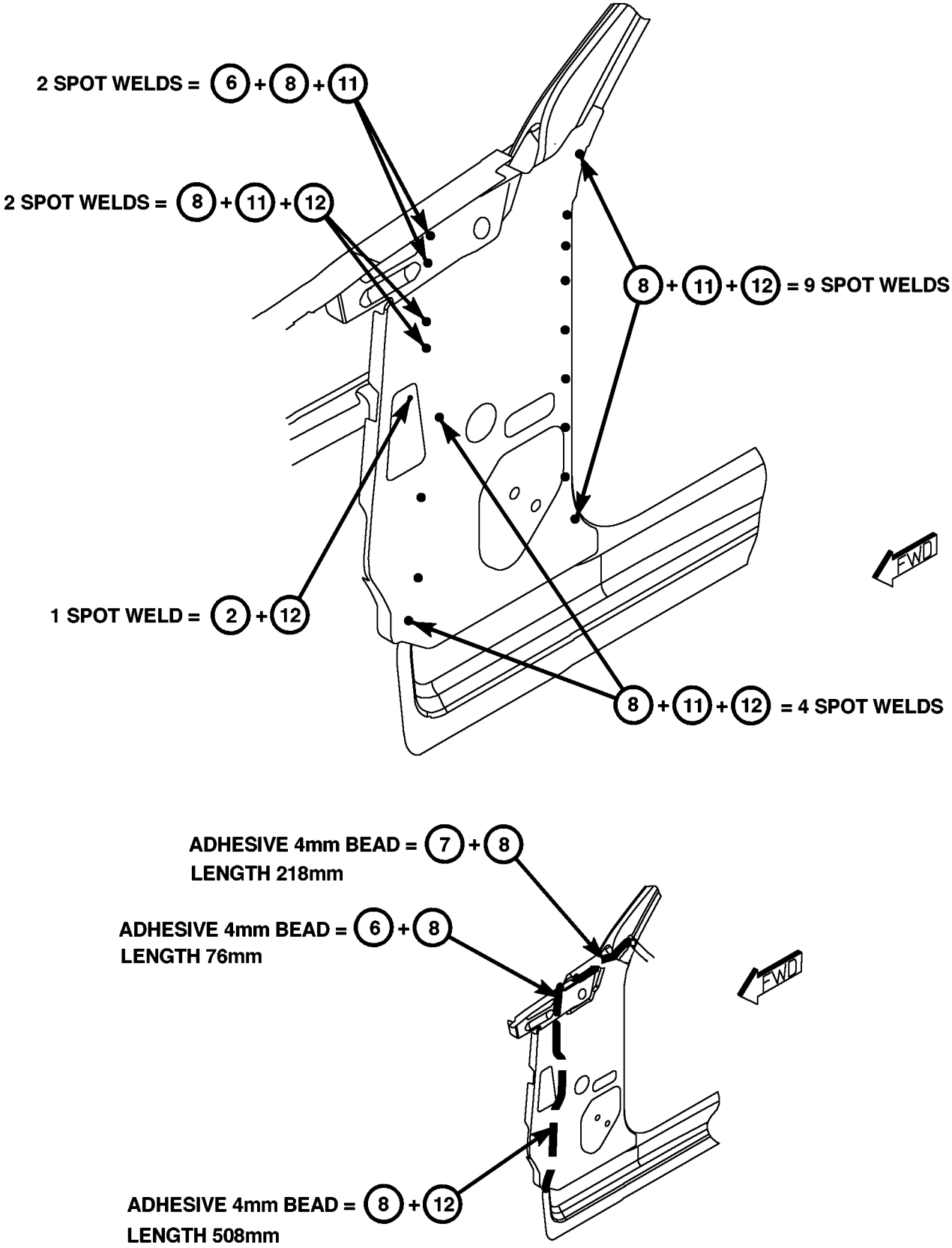

Fig. 67 FRONT INNER SIDE PANELS

WELD AND STRUCTURAL ADHESIVE LOCATIONS (Continued)

ROOF PANEL ASSEMBLIES

1. ROOF PANEL
2. ROOF PANEL WITH SUNROOF
3. ROOF HEADER - FRONT
4. HEADER MOUNTING REINFORCEMENT
5. ROOF BOW - FRONT
6. ROOF BOW - REAR
7. ROOF HEADER - REAR
8. REAR GATE OPENING PANEL ASSEMBLY
9. BODY SIDE OUTER PANEL
10. BODY SIDE INNER PANEL
11. A-PILLAR REINFORCEMENT
12. B-PILLAR REINFORCEMENT
13. D-PILLAR REINFORCEMENT

NOTE
ITEMS 4,9,10,11,12 AND 13 ARE PARTS OF THE BODY SIDE COMPLETE ASSEMBLY

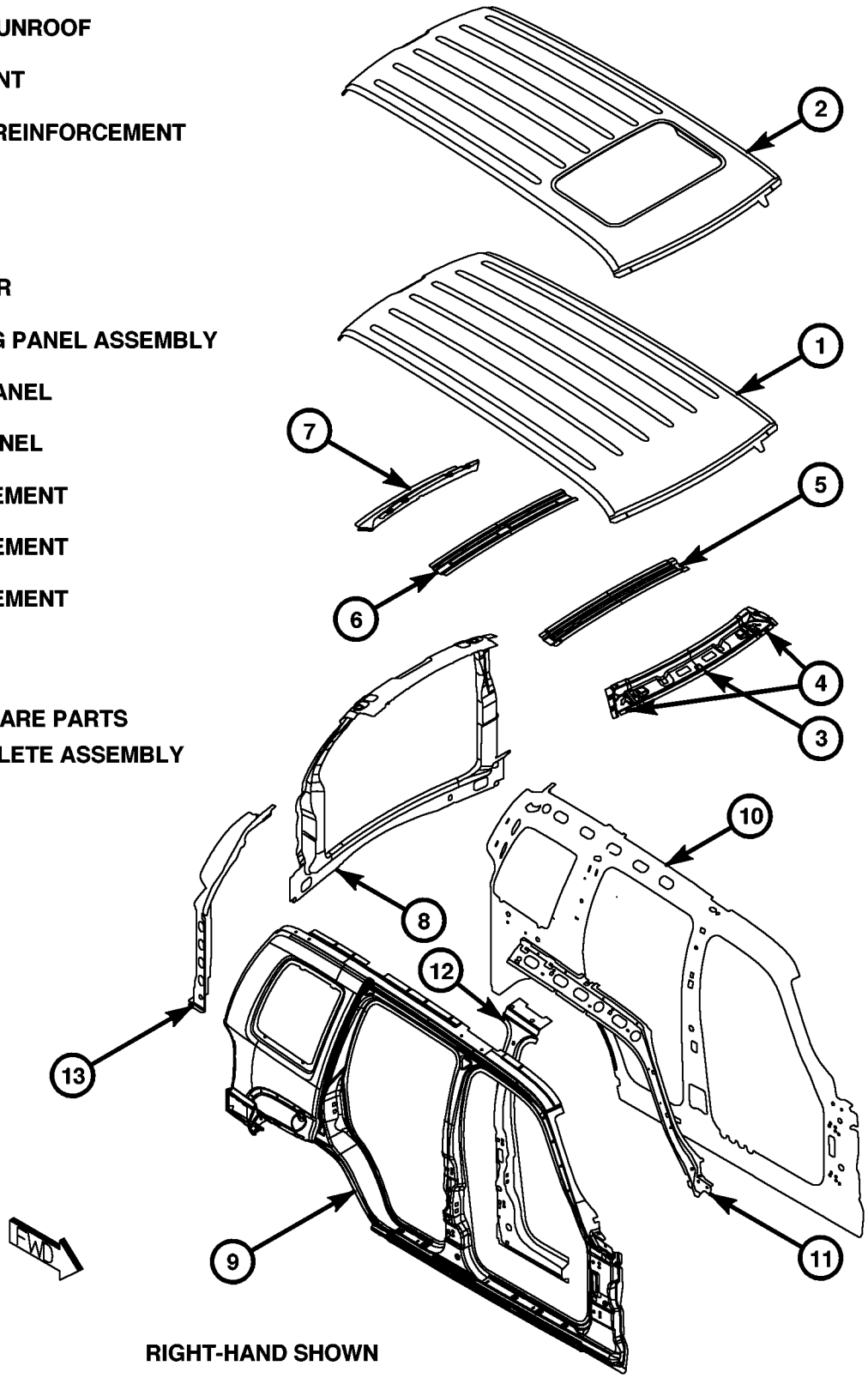

RIGHT-HAND SHOWN
LEFT-HAND OPPOSITE

Fig. 68 ROOF PANEL ASSEMBLY

WELD AND STRUCTURAL ADHESIVE LOCATIONS (Continued)

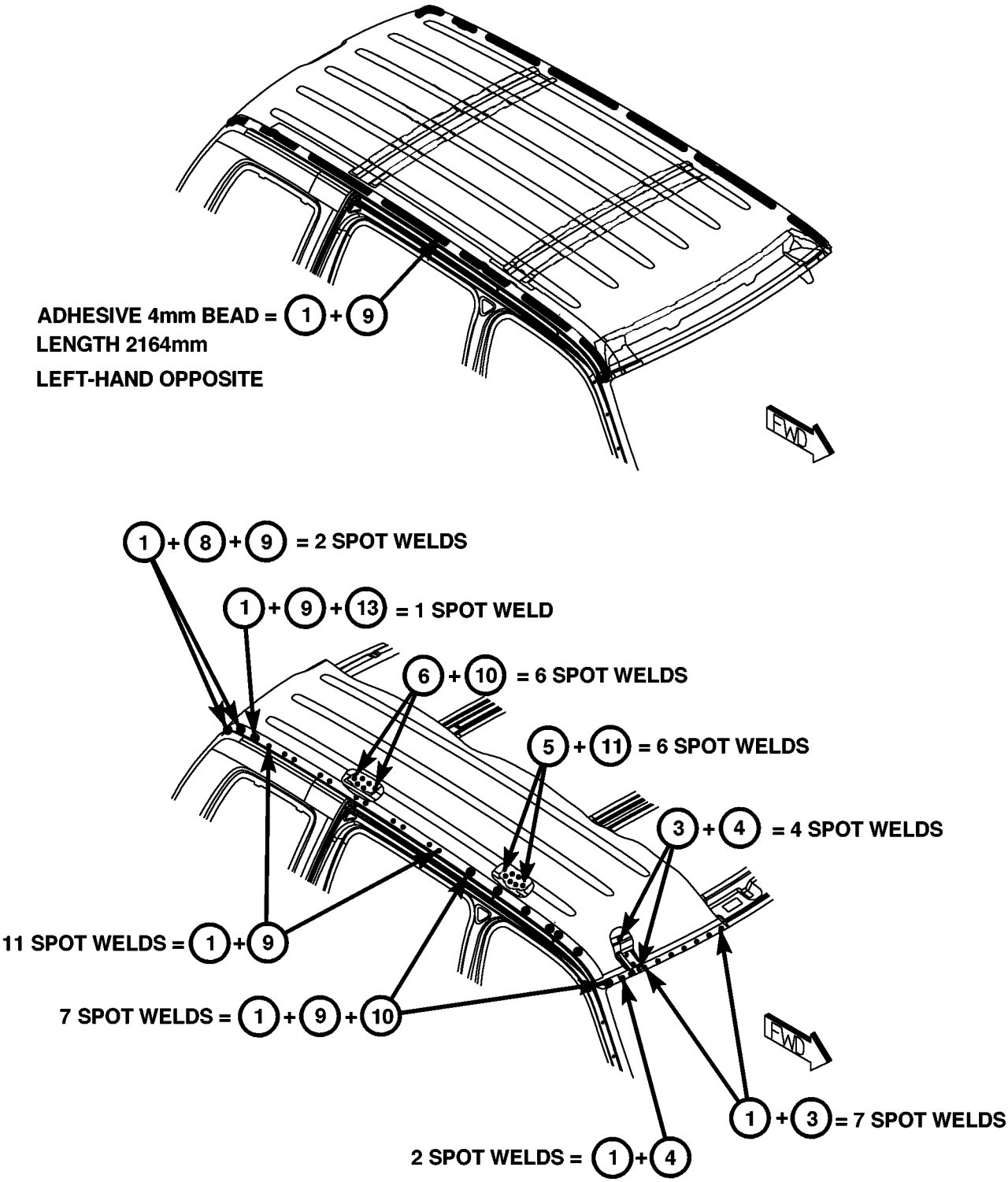

Fig. 69 ROOF PANEL ASSEMBLY

WELD AND STRUCTURAL ADHESIVE LOCATIONS (Continued)

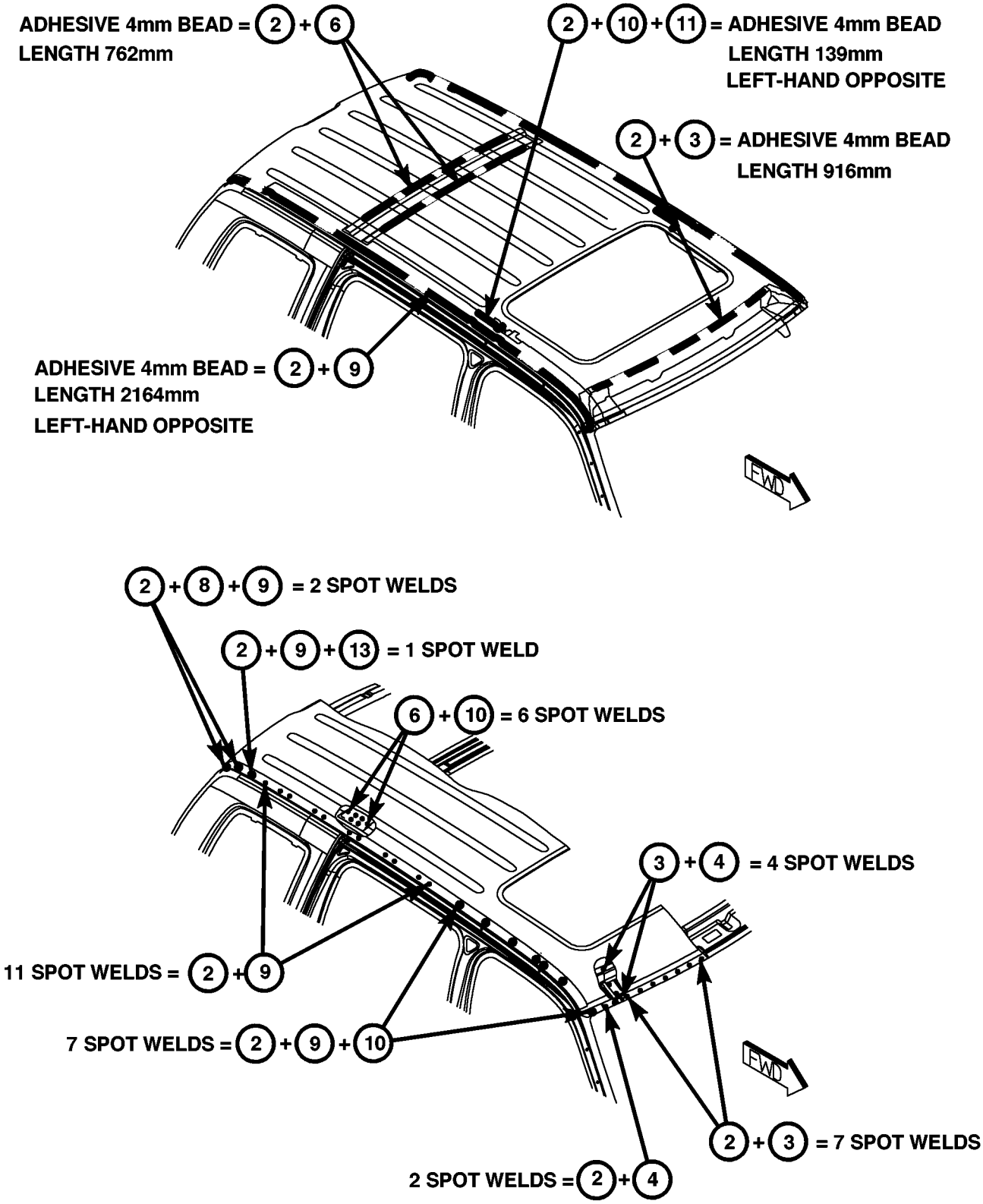

Fig. 70 ROOF PANEL

WELD AND STRUCTURAL ADHESIVE LOCATIONS (Continued)

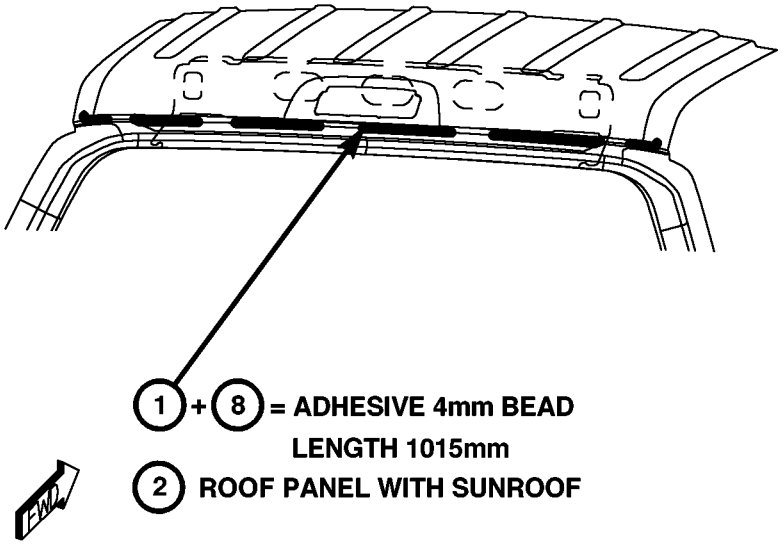

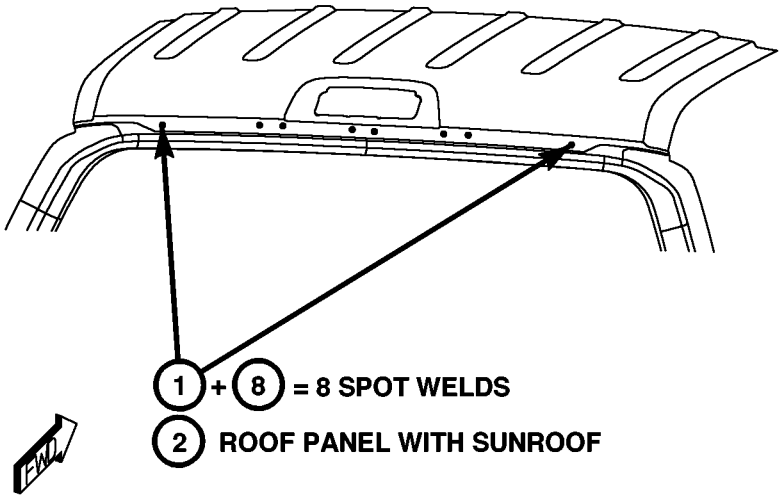

Fig. 71 ROOF PANEL

WELD AND STRUCTURAL ADHESIVE LOCATIONS (Continued)

BODY SIDE PANELS & FLOOR PAN ASSEMBLIES

1. BODY SIDE OUTER PANEL
2. BODY SIDE INNER PANEL
3. BODY SIDE SILL
4. REAR WHEELHOUSE OUTER PANEL
5. REAR WHEELHOUSE INNER PANEL ASSEMBLY
6. REAR WHEELHOUSE INNER EXTENSION
7. REAR CROSSMEMBER
8. REAR FLOOR PAN
9. D-PILLAR REINFORCEMENT
10. ROOF HEADER - REAR
11. REAR GATE OPENING PANEL ASSEMBLY
12. GATE STRIKER REINFORCEMENT
13. D-PILLAR LOWER TO FLOOR GUSSET
14. GATE OPENING REINFORCEMENT
15. TAIL LAMP MOUNTING PANEL

NOTE

ITEMS 1,2,9,12 AND 15 ARE PARTS OF THE BODY SIDE COMPLETE ASSEMBLY

ITEMS 3,4,5,6,7,8,13 AND 14 ARE PARTS OF THE UNDERBODY COMPLETE ASSEMBLY

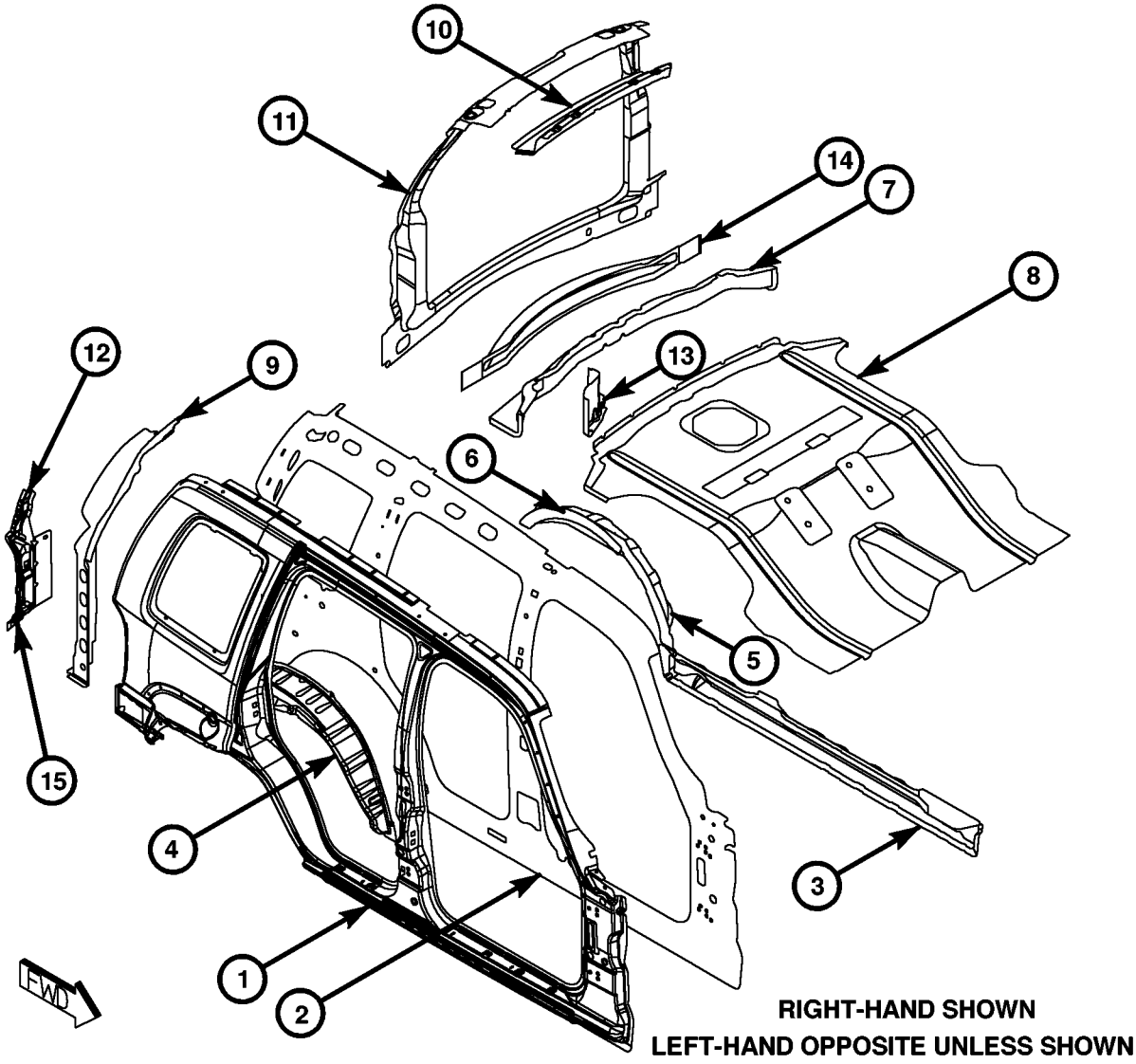

Fig. 72 BODY SIDE PANEL ASSEMBLY

WELD AND STRUCTURAL ADHESIVE LOCATIONS (Continued)

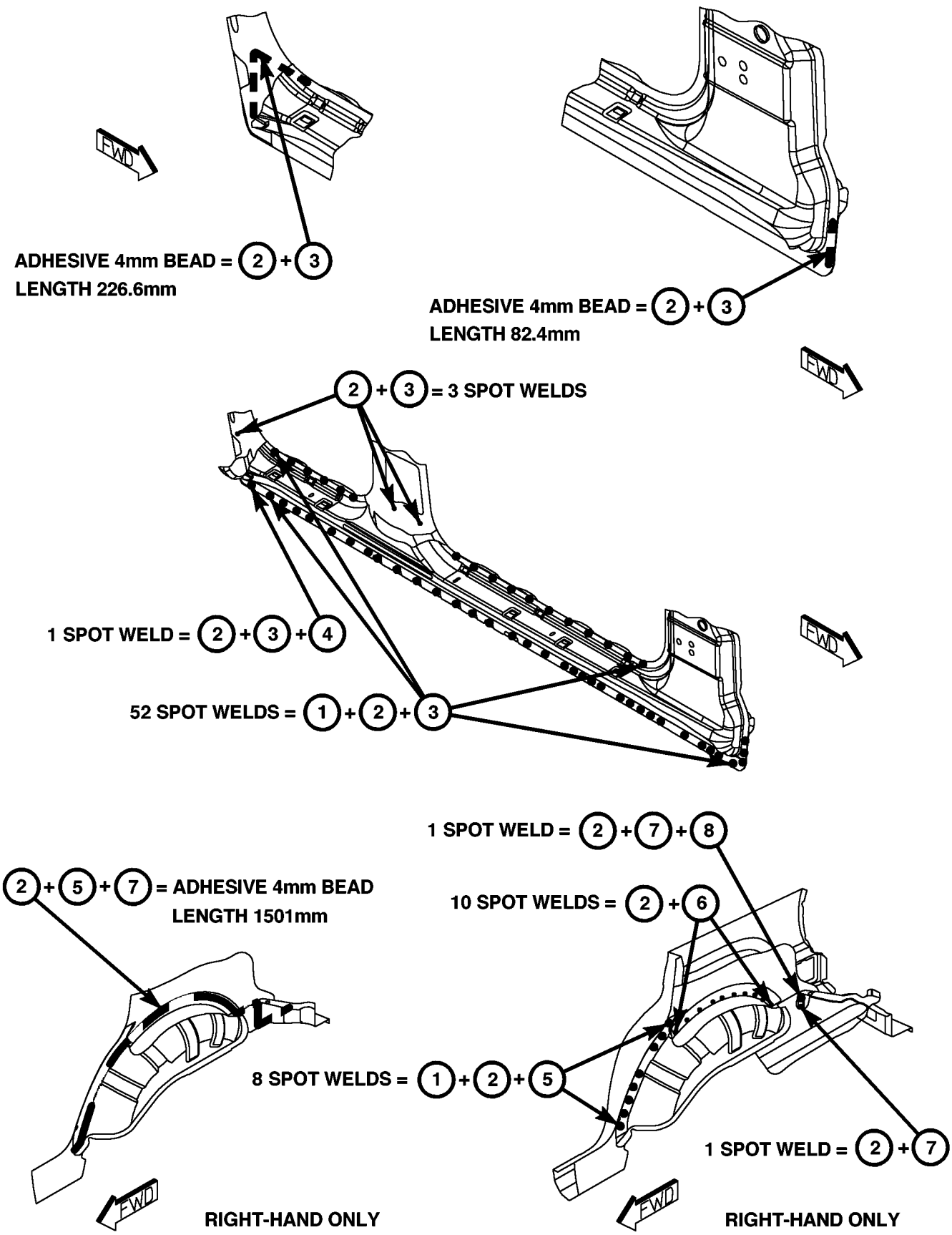

Fig. 73 BODY SIDE PANEL

WELD AND STRUCTURAL ADHESIVE LOCATIONS (Continued)

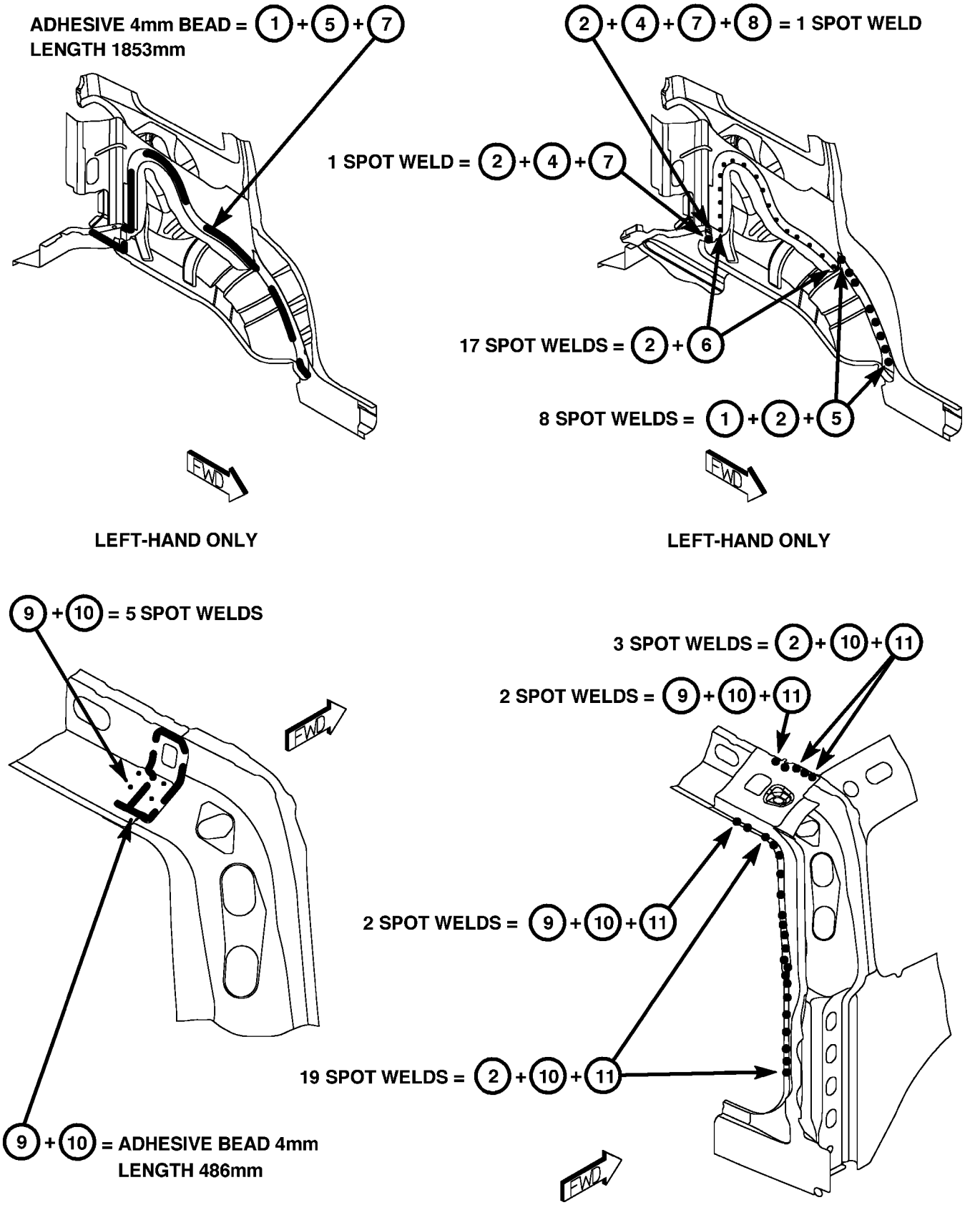

Fig. 74 016 BODY SIDE PANEL

WELD AND STRUCTURAL ADHESIVE LOCATIONS (Continued)

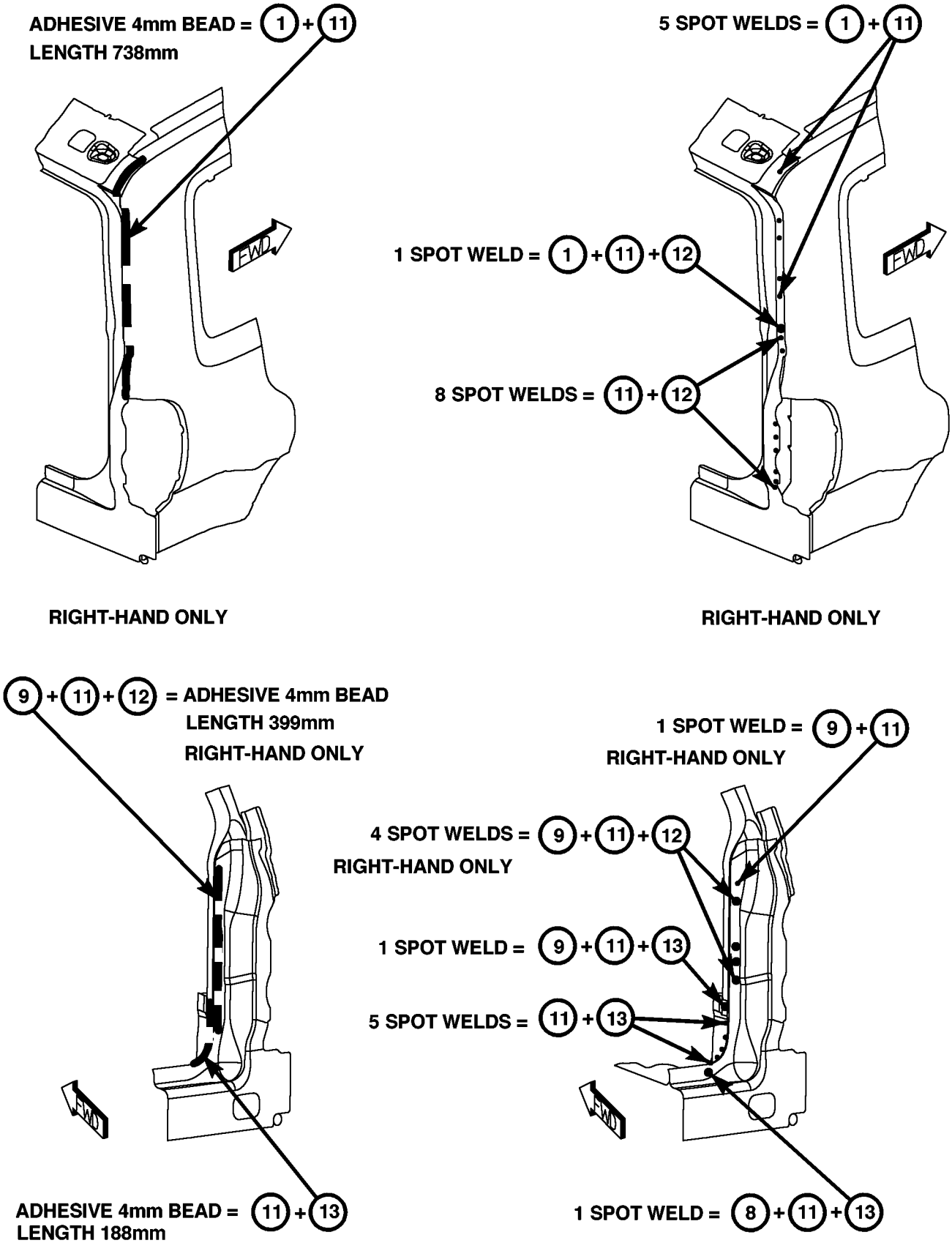

Fig. 75 D-PILLAR

WELD AND STRUCTURAL ADHESIVE LOCATIONS (Continued)

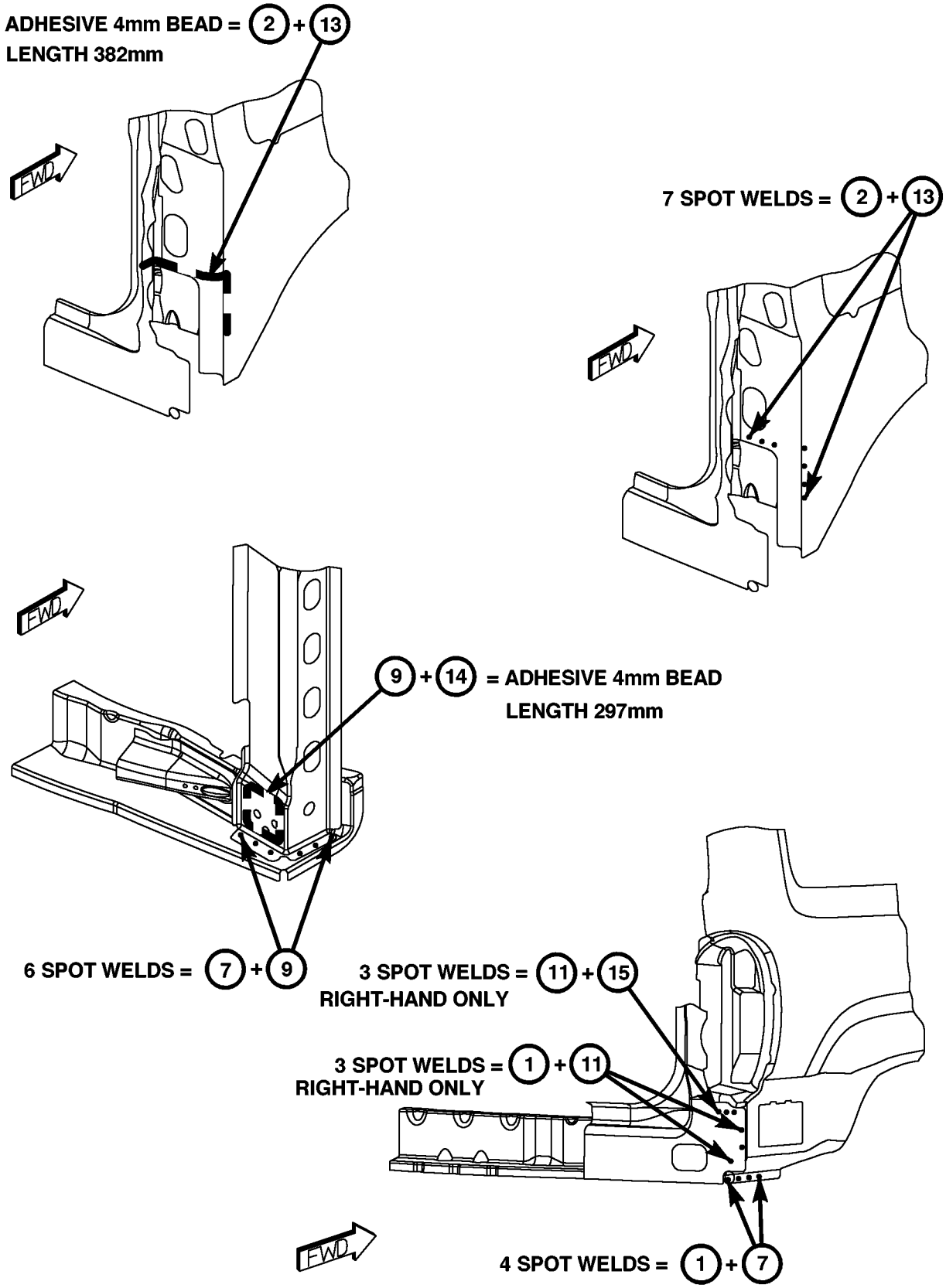

Fig. 76 D-PILLAR

WELD AND STRUCTURAL ADHESIVE LOCATIONS (Continued)

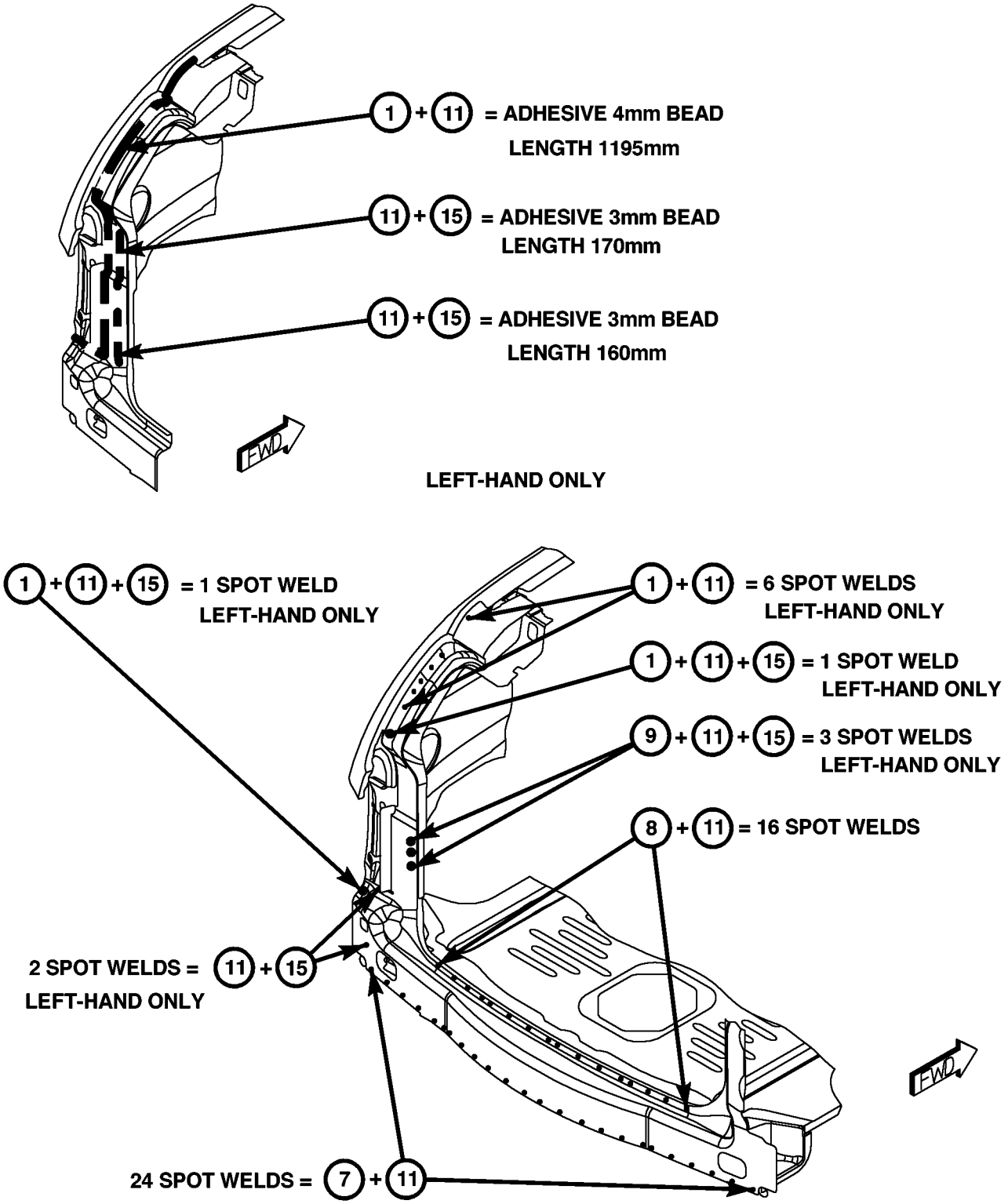

Fig. 77 SWING GATE OPENING

SEALER LOCATIONS

SPECIFICATIONS

INDEX

DESCRIPTION	FIGURE
SEALER APPLICATION METHODS	(78)
REAR FLOOR PAN AND FUEL TANK ACCESS DOOR	(79)
FLOOR PANS; BODY SIDE SILLS; DASH PANEL; COWL AND PLENUM ASSEMBLY	(80)
FRONT FLOOR PAN; DASH; BODY SIDE SILL AND COWL PANELS	(81)
FLOOR PANS AND SIDE SILLS	(82)
BODY SIDE, PLENUM AND DASH PANELS ASSEMBLIES	(83)
A-PILLAR AND DASH PANEL	(84)
PLENUM AND DASH PANEL	(85)
BODY SIDE PANEL ASSEMBLIES	(86)
BODY SIDE SILL; WHEELHOUSE; B-PILLAR	(87)
TAIL LAMP MOUNTING AND SWING GATE STRIKER REINFORCEMENT ASSEMBLIES	(88)
ROOF PANEL; SWING GATE OPENING ASSEMBLIES	(89)
ROOF PANEL; SWING GATE OPENING	(90)
ROOF PANEL; SWING GATE OPENING	(91)
BODY SIDE PANEL; SWING GATE OPENING; FLOOR PAN ASSEMBLY	(92)
SWING GATE OPENING	(93)
WHEELHOUSES	(94)
BODY SIDE PANEL; FLOOR PAN; SWING GATE OPENING ASSEMBLIES	(95)
WHEELHOUSES	(96)
WHEELHOUSES	(97)
WHEELHOUSE	(98)
ROOF PANEL ASSEMBLY	(99)
REAR ROOF HEADER AND ROOF PANEL	(100)

SEALER LOCATIONS (Continued)

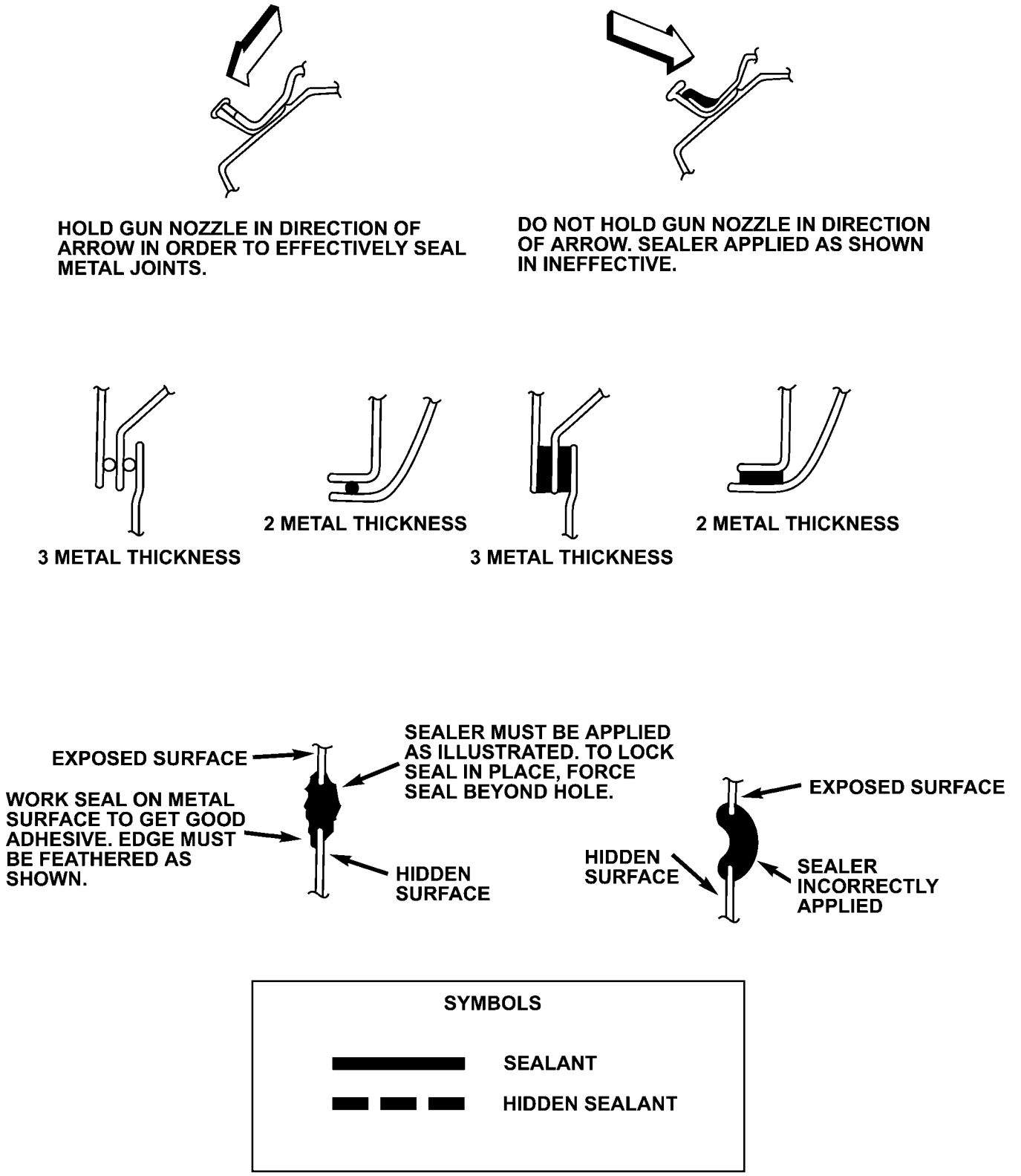

Fig. 78 APPLICATION METHODS

SEALER LOCATIONS (Continued)

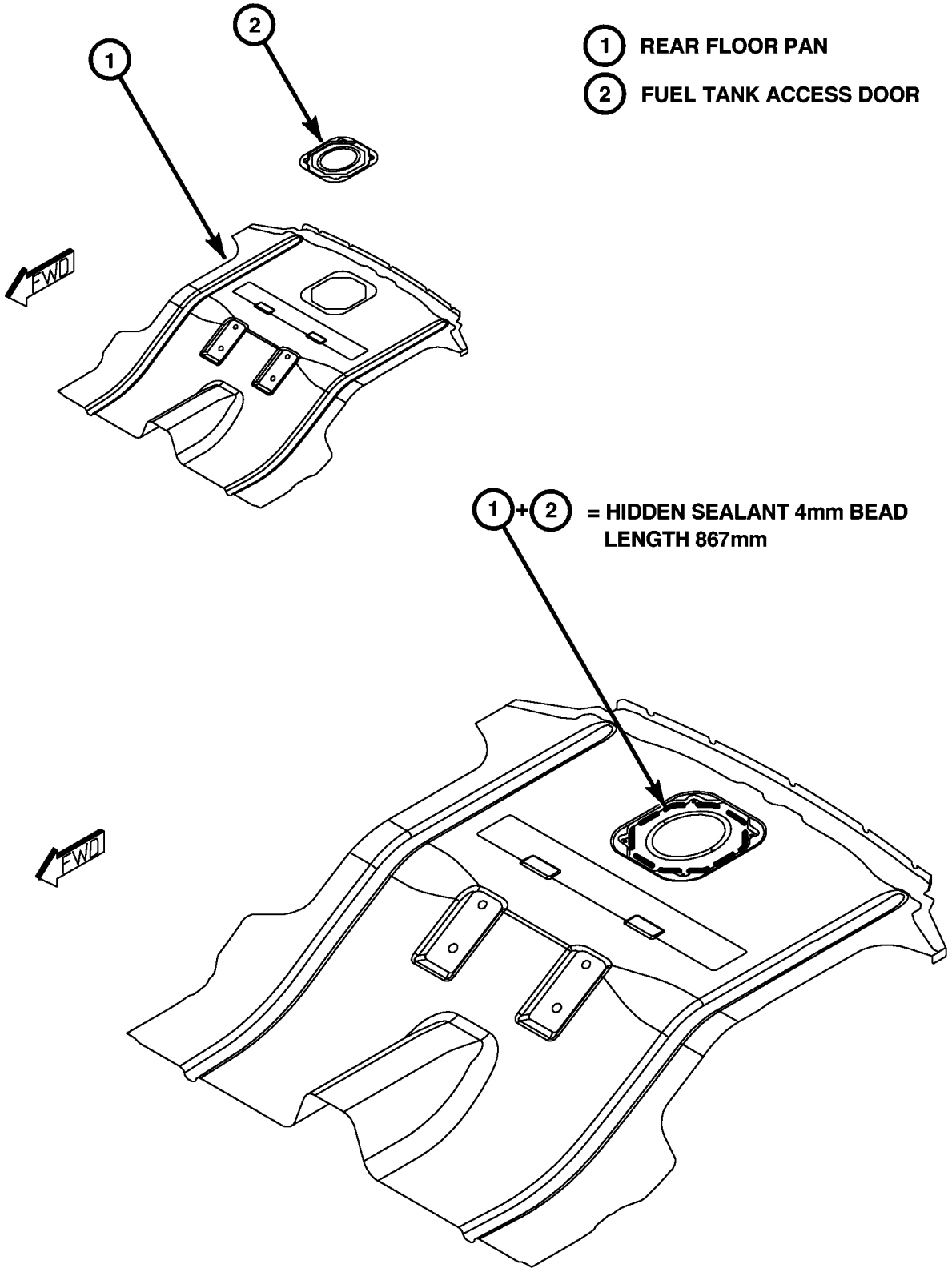

Fig. 79 REAR FLOOR PAN

SEALER LOCATIONS (Continued)

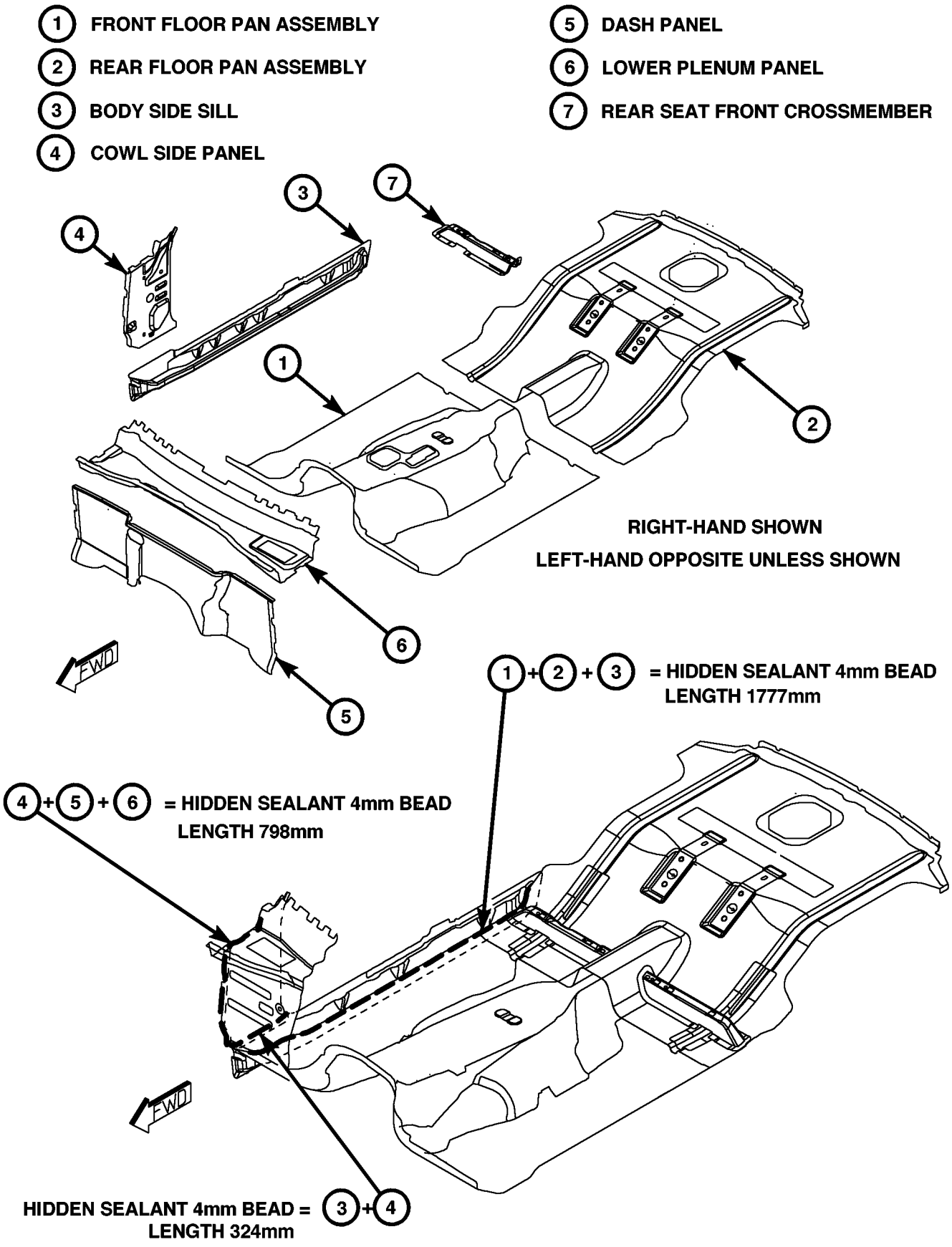

Fig. 80 FULL FLOOR PAN

SEALER LOCATIONS (Continued)

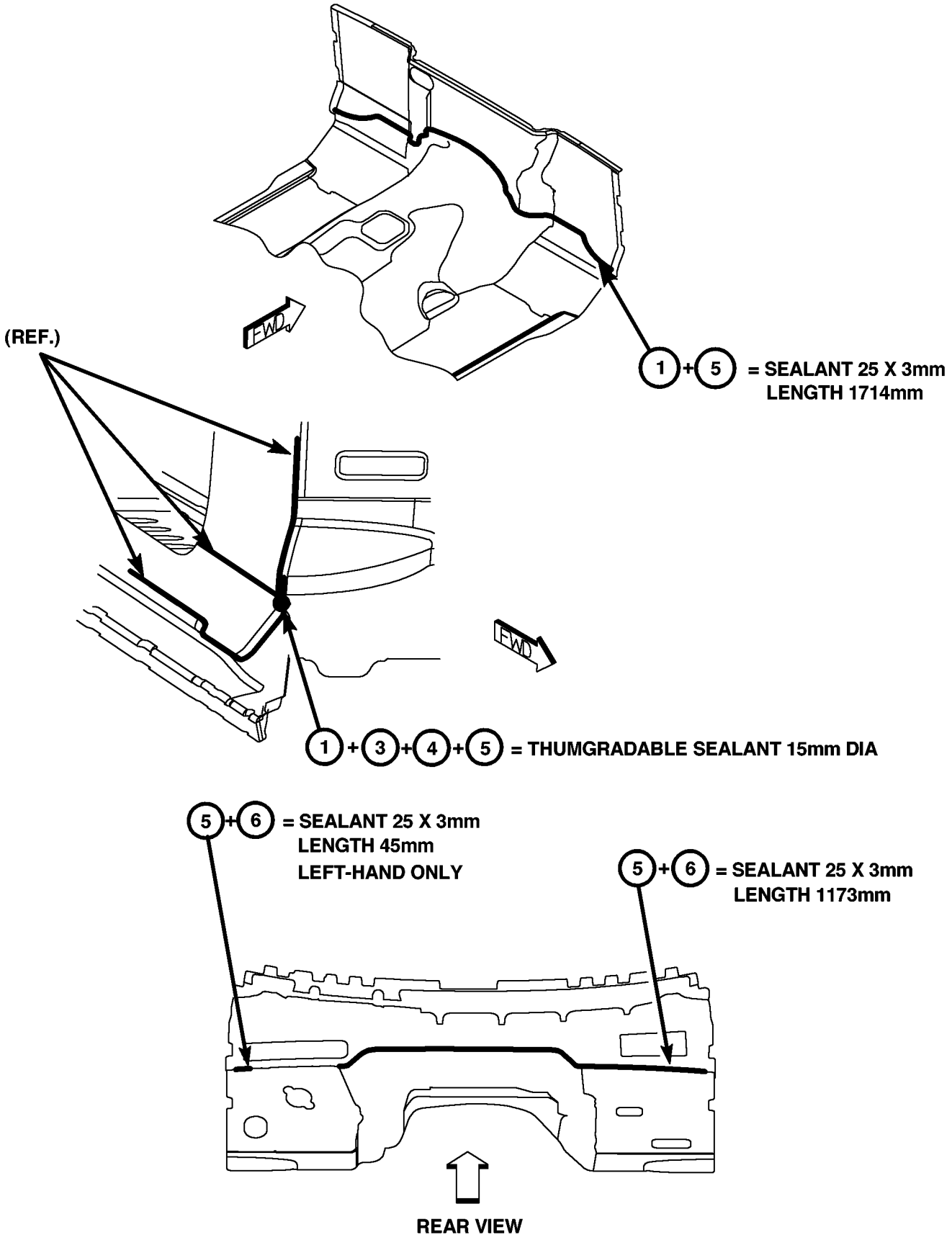

Fig. 81 FRONT FLOOR PAN & DASH PANEL

SEALER LOCATIONS (Continued)

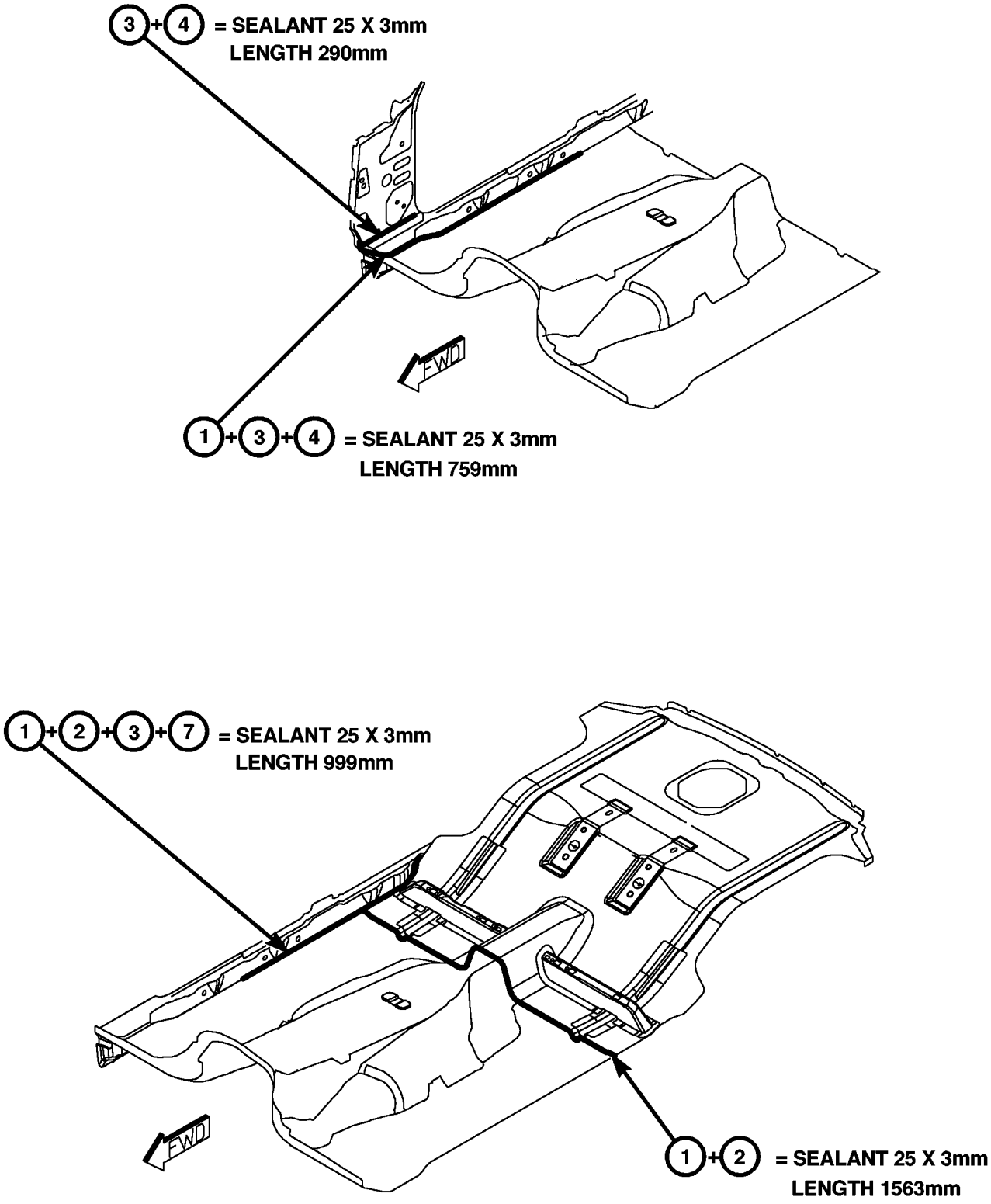

Fig. 82 FLOOR PAN

SEALER LOCATIONS (Continued)

1. PLENUM BAFFLE PANEL
2. LOWER PLENUM PANEL
3. PLENUM PANEL
4. DASH PANEL
5. BODY SIDE INNER PANEL
6. A-PILLAR REINFORCEMENT
7. BODY SIDE OUTER PANEL
8. COWL SIDE PANEL

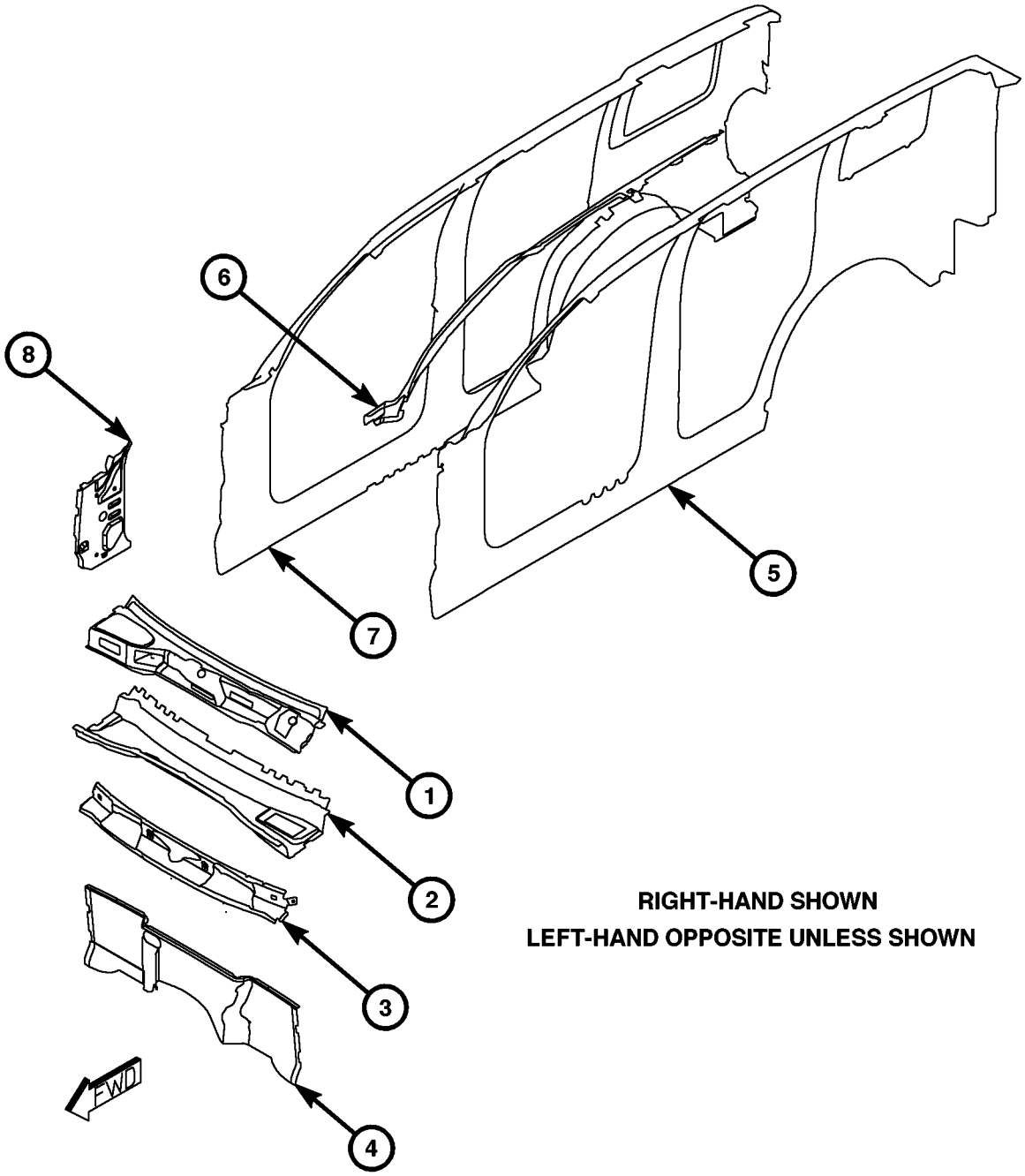

RIGHT-HAND SHOWN
LEFT-HAND OPPOSITE UNLESS SHOWN

Fig. 83 BODY SIDE PANEL ASSEMBLY

SEALER LOCATIONS (Continued)

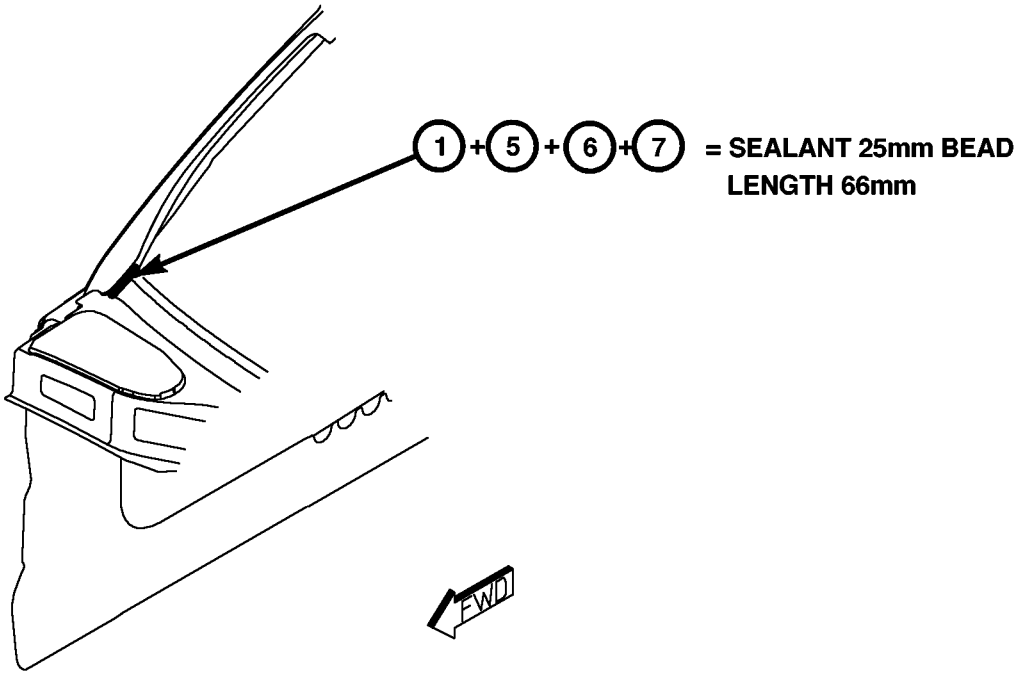

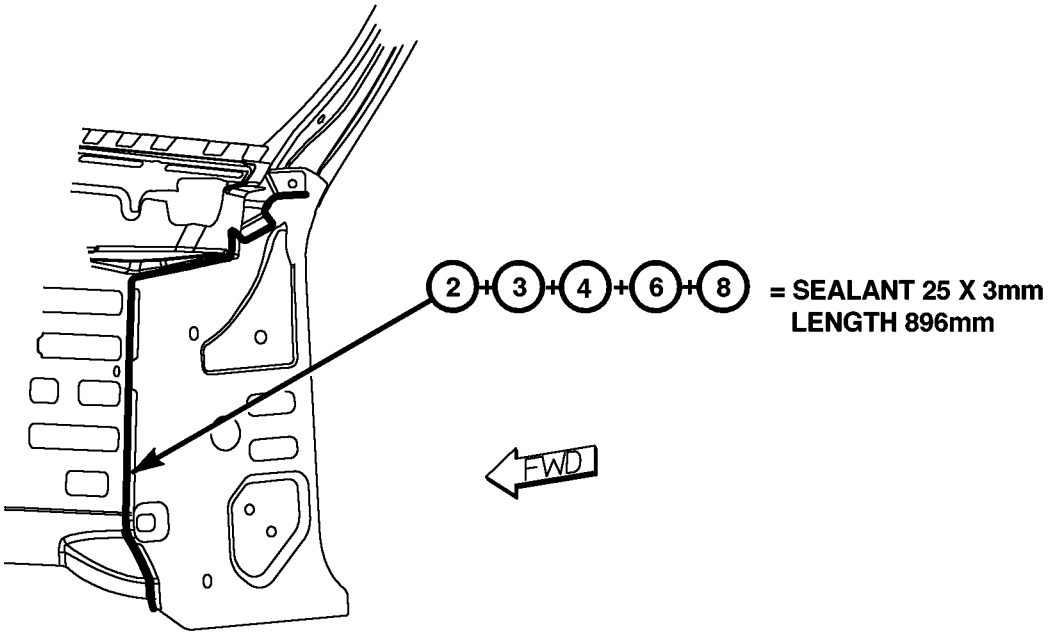

Fig. 84 A-PILLAR & DASH PANEL

SEALER LOCATIONS (Continued)

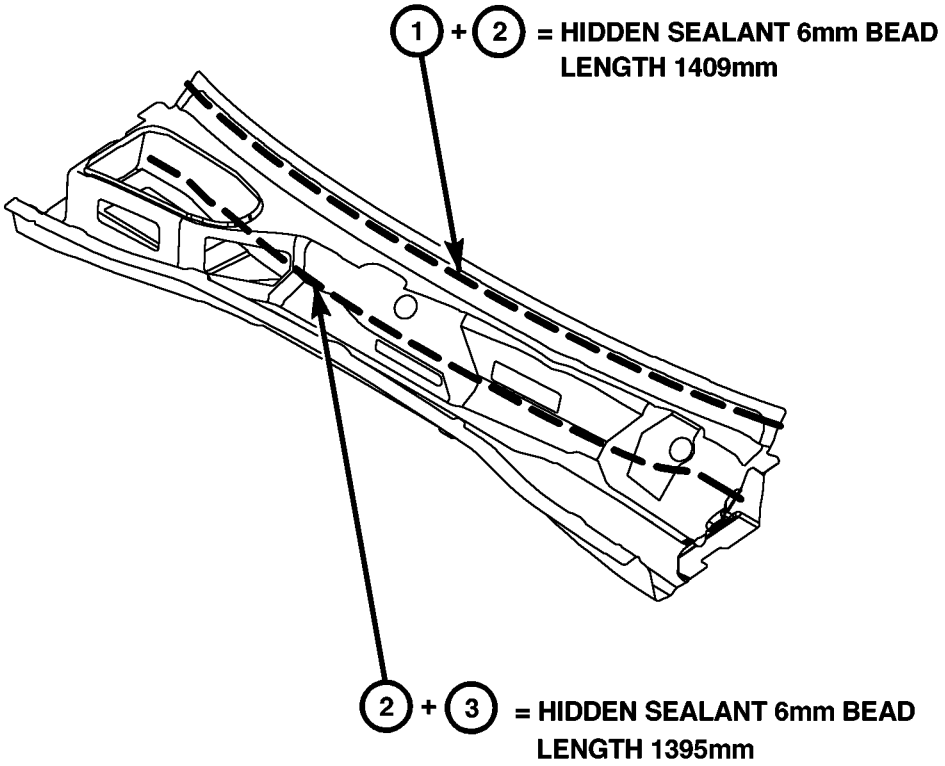

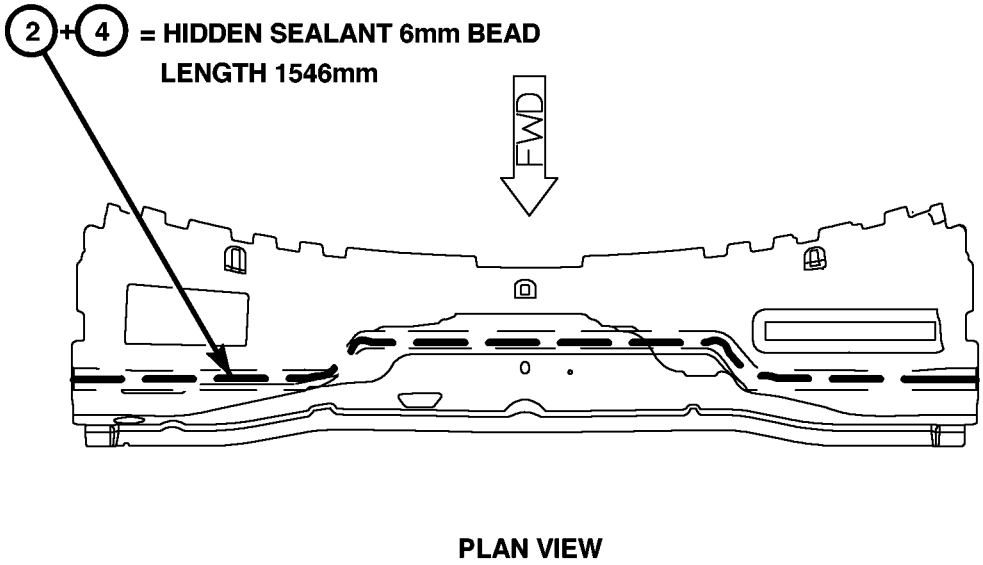

Fig. 85 PLENUM AND DASH PANEL

SEALER LOCATIONS (Continued)

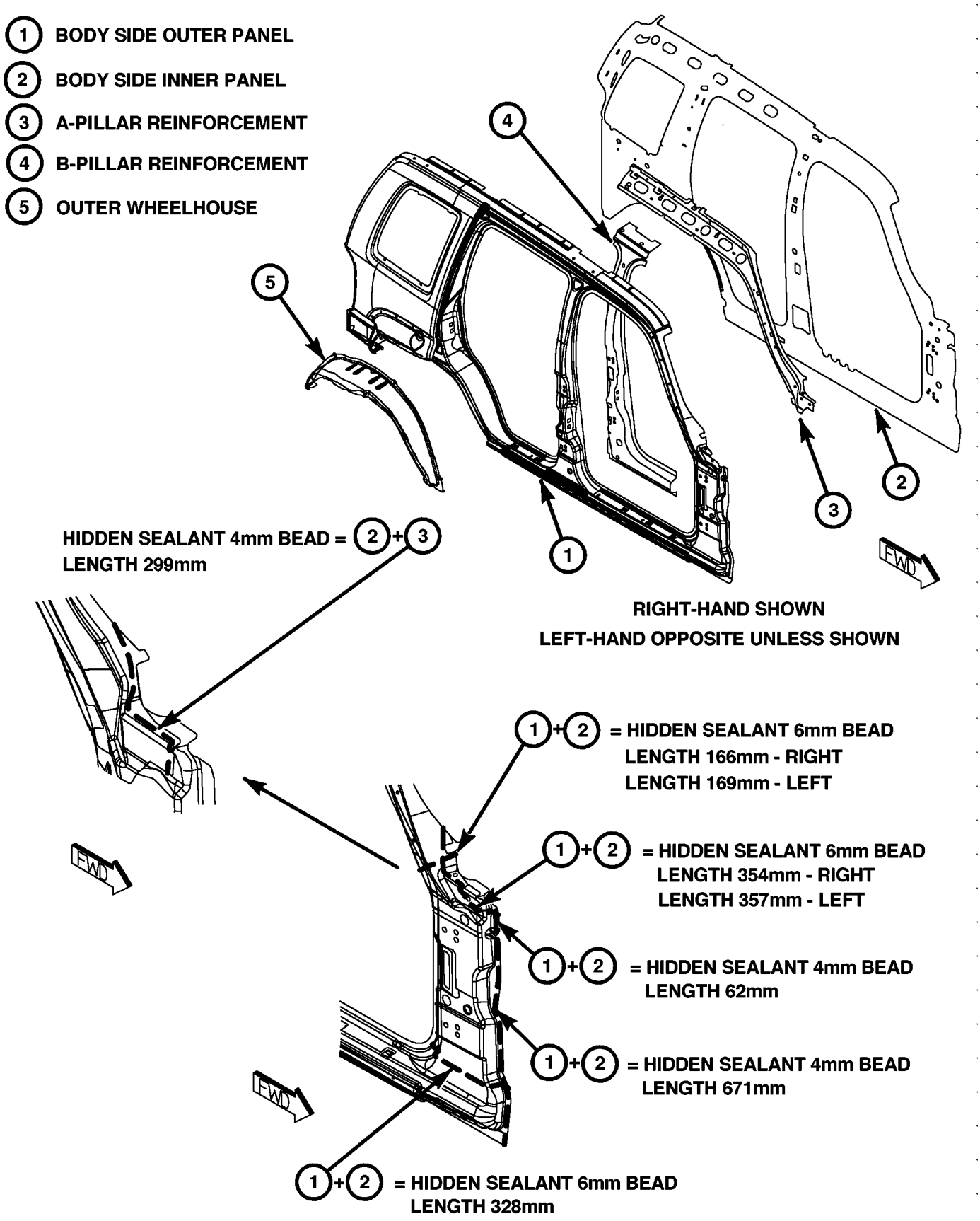

Fig. 86 BODY SIDE PANEL ASSEMBLIES

SEALER LOCATIONS (Continued)

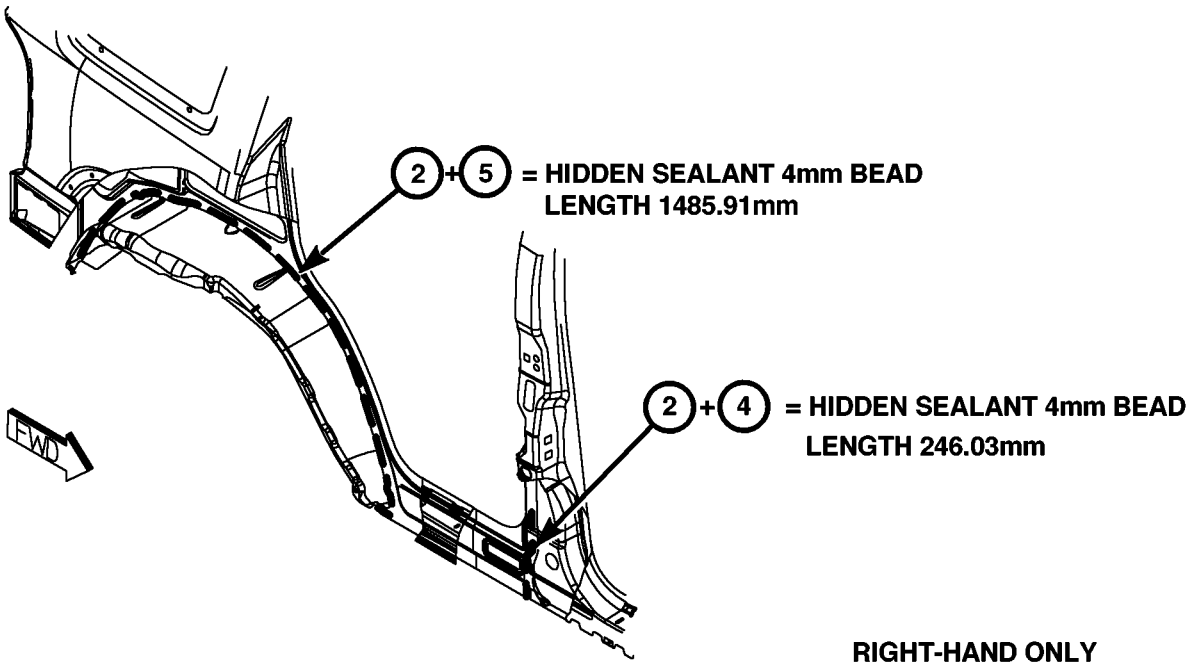

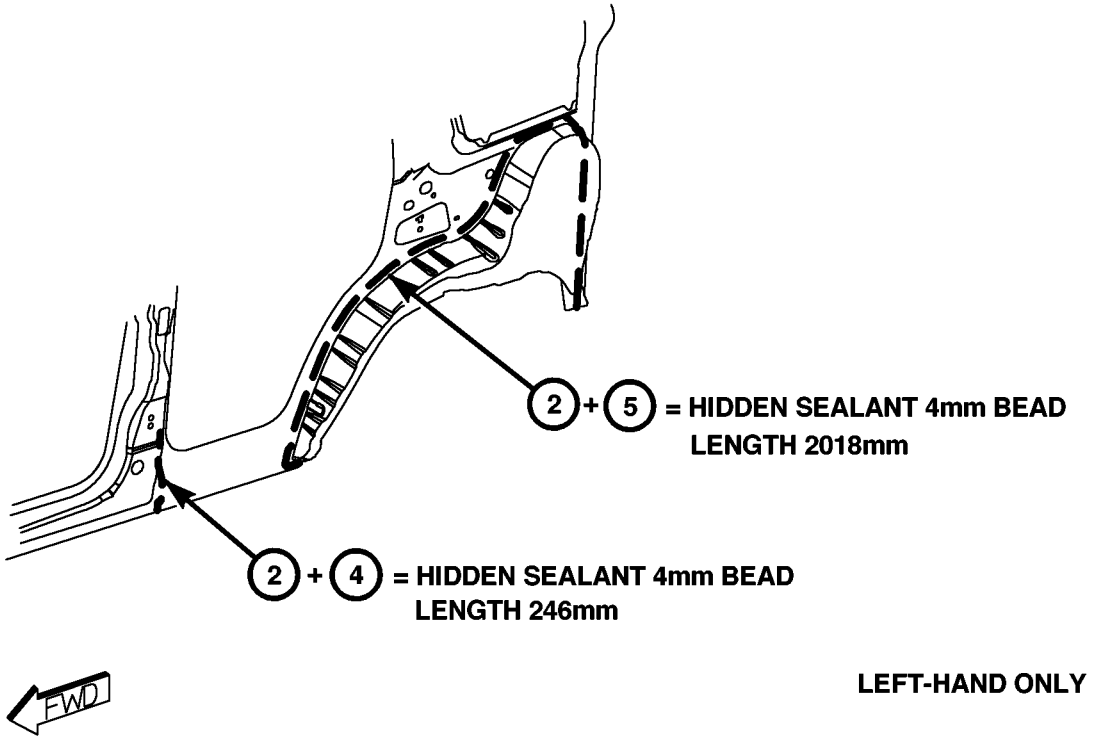

Fig. 87 WHEELHOUSES

SEALER LOCATIONS (Continued)

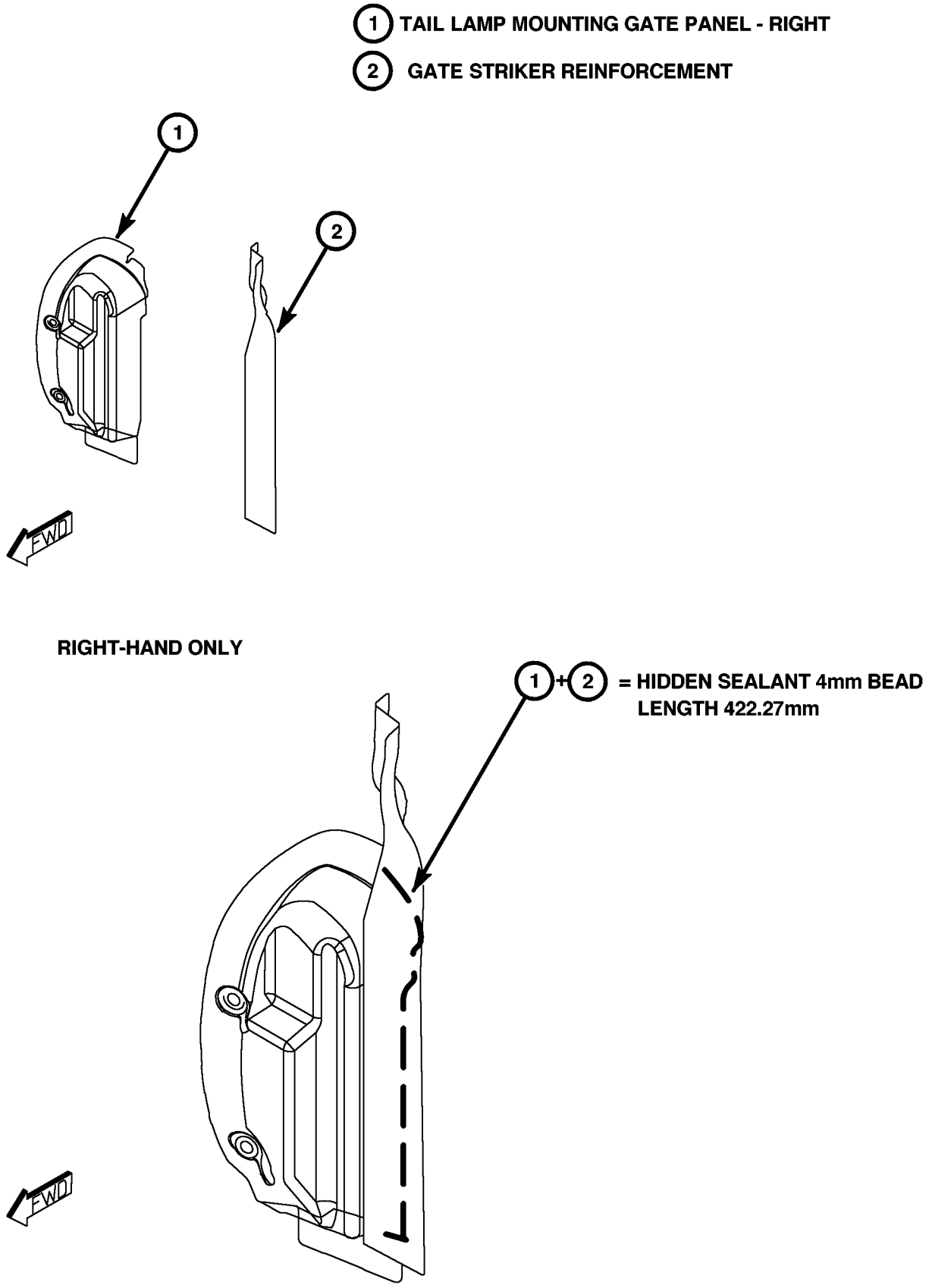

Fig. 88 TAIL LAMP MOUNTING

SEALER LOCATIONS (Continued)

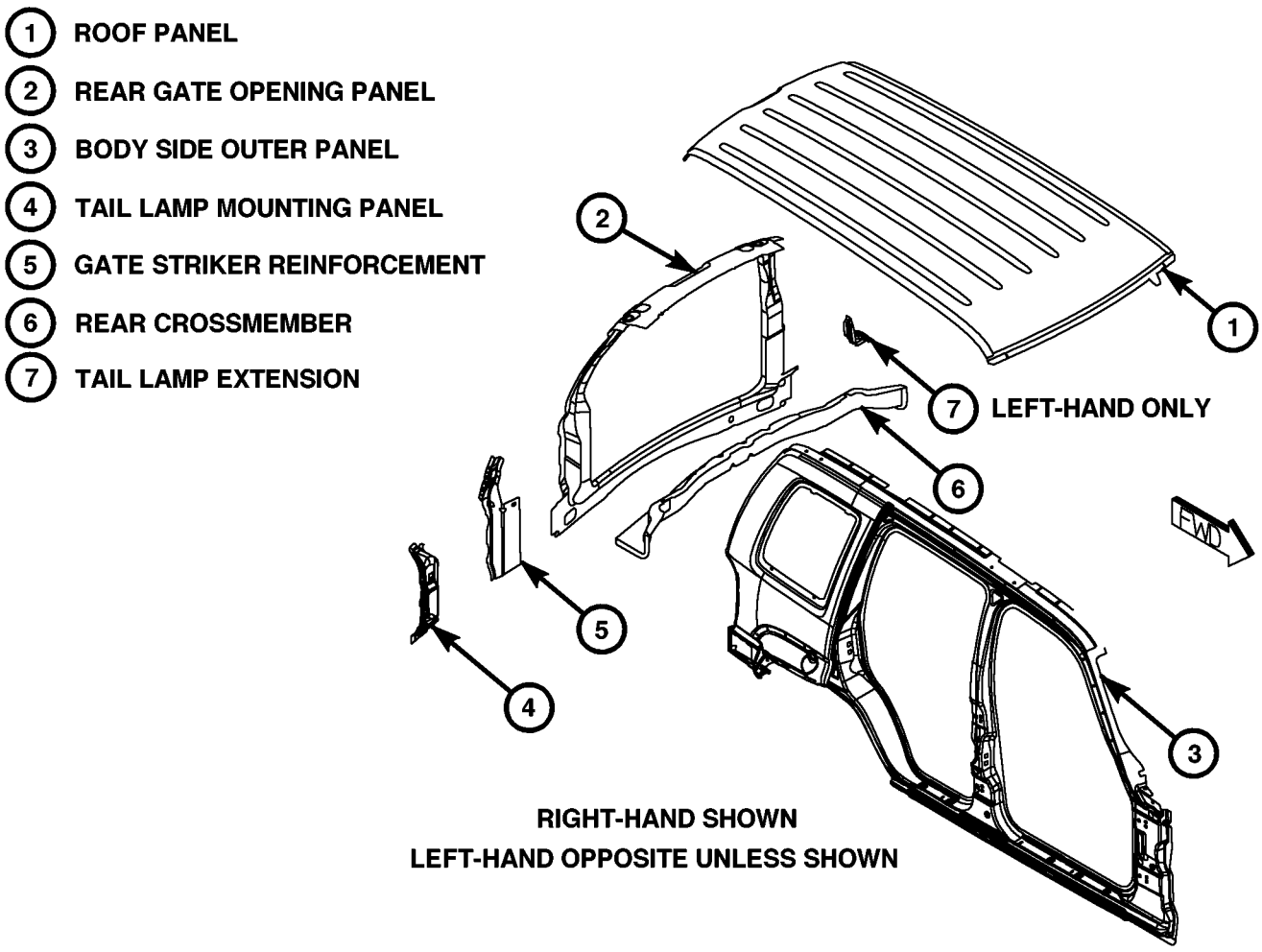

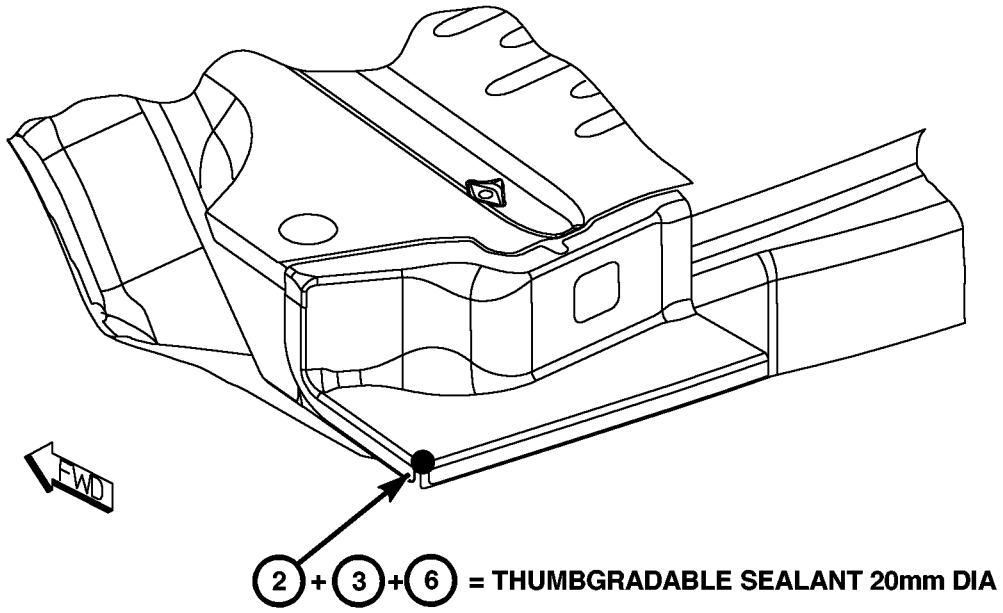

Fig. 89 ROOF PANEL & BODY SIDE SILL ASSEMBLY

SEALER LOCATIONS (Continued)

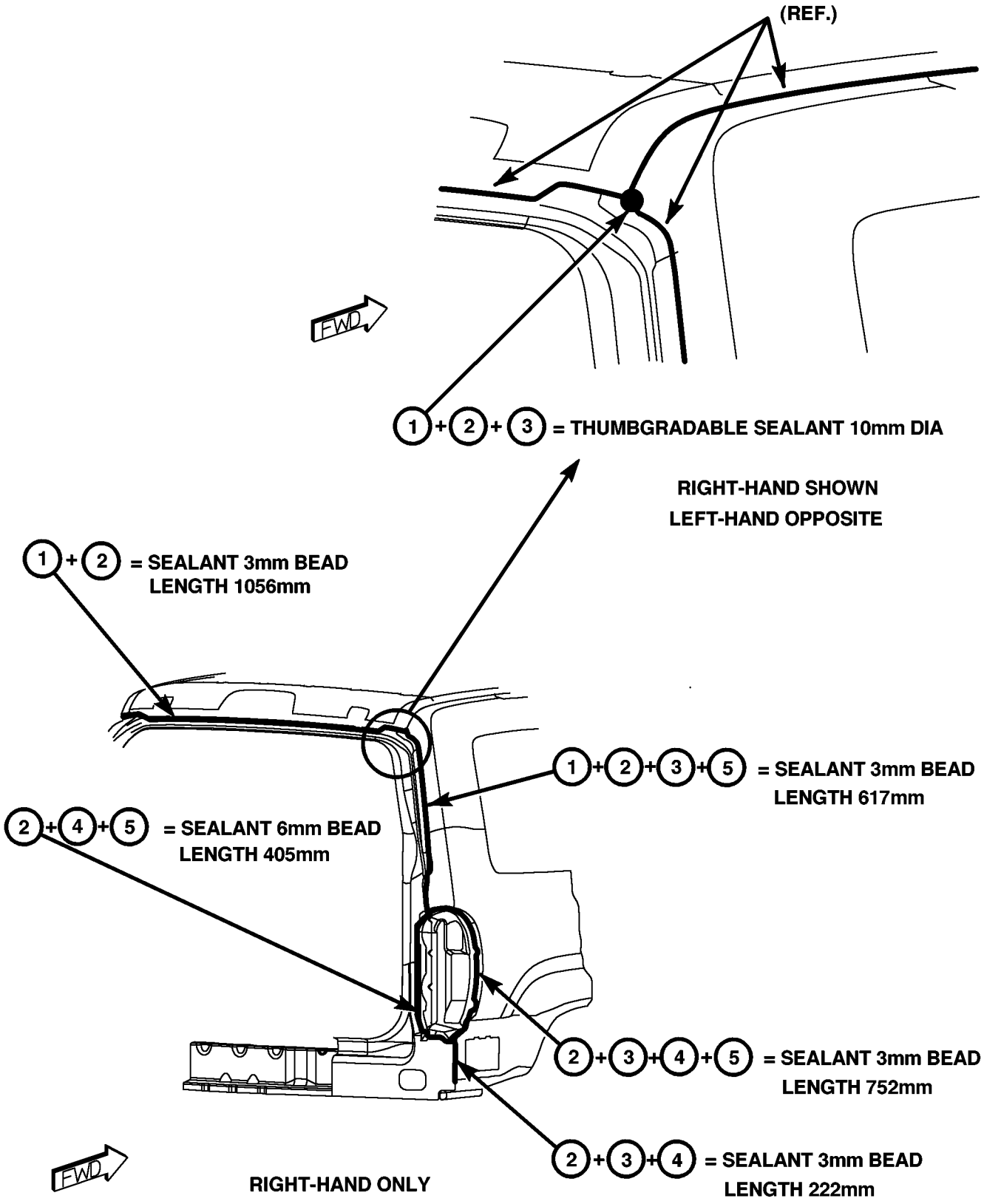

Fig. 90 SWING GATE OPENING

SEALER LOCATIONS (Continued)

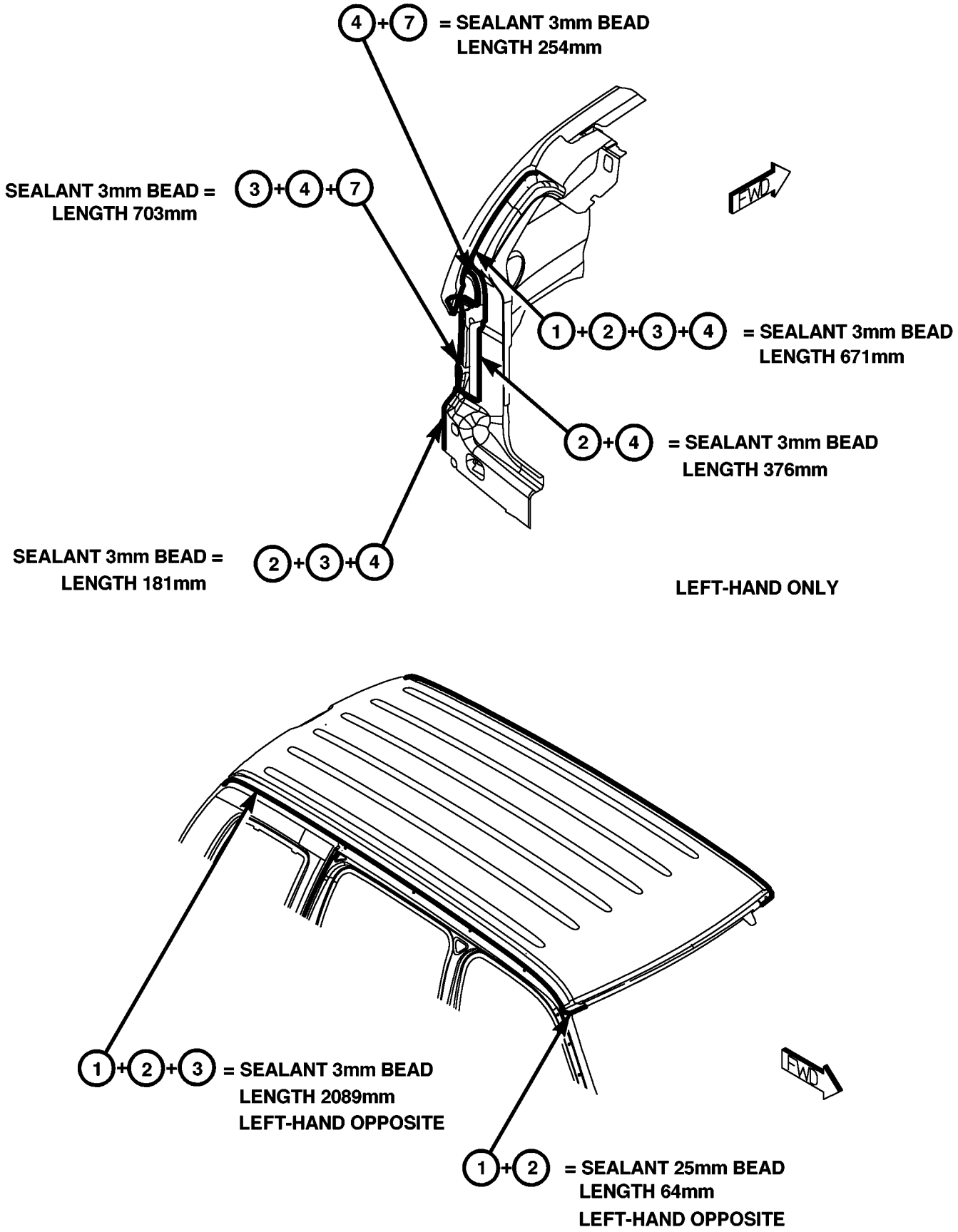

Fig. 91 ROOF PANEL; SWING GATE OPENING

SEALER LOCATIONS (Continued)

1. TAIL LAMP MOUNTING GATE PANEL - RIGHT
2. GATE STRIKER REINFORCEMENT
3. REAR GATE OPENING PANEL
4. REAR CROSSMEMBER
5. REAR FLOOR PAN
6. BODY SIDE INNER PANEL
7. A-PILLAR REINFORCEMENT
8. BODY SIDE OUTER PANEL
9. BODY SIDE SILL
10. COWL SIDE PANEL

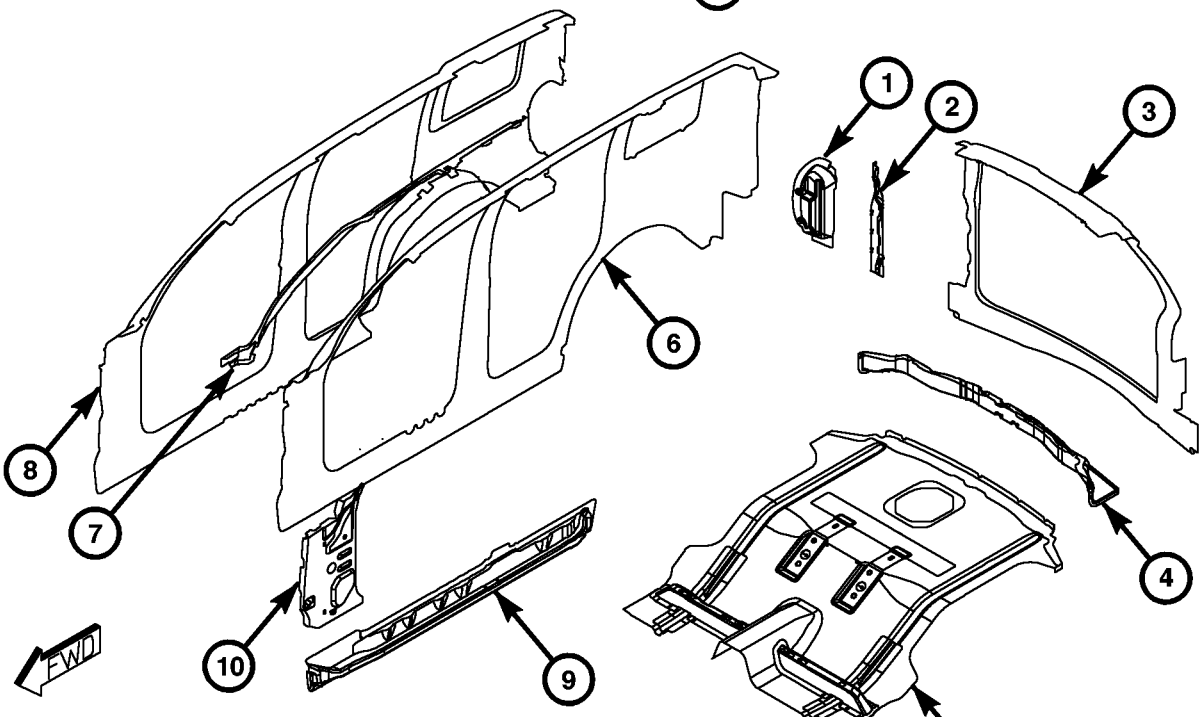

7 + 10 = HIDDEN SEALANT 4mm BEAD
LENGTH 65mm

RIGHT-HAND SHOWN
LEFT-HAND OPPOSITE UNLESS SHOWN

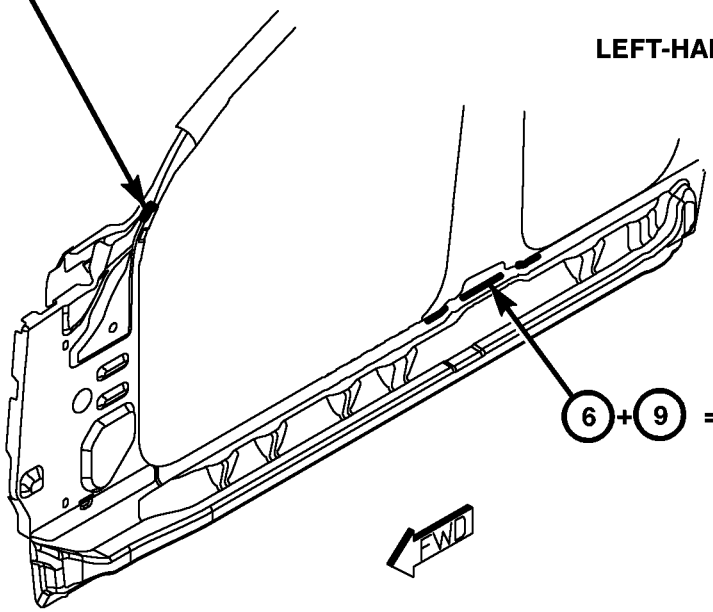

6 + 9 = HIDDEN SEALANT 6mm BEAD
LENGTH 306mm

Fig. 92 BODY SIDE PANEL ASSEMBLY

SEALER LOCATIONS (Continued)

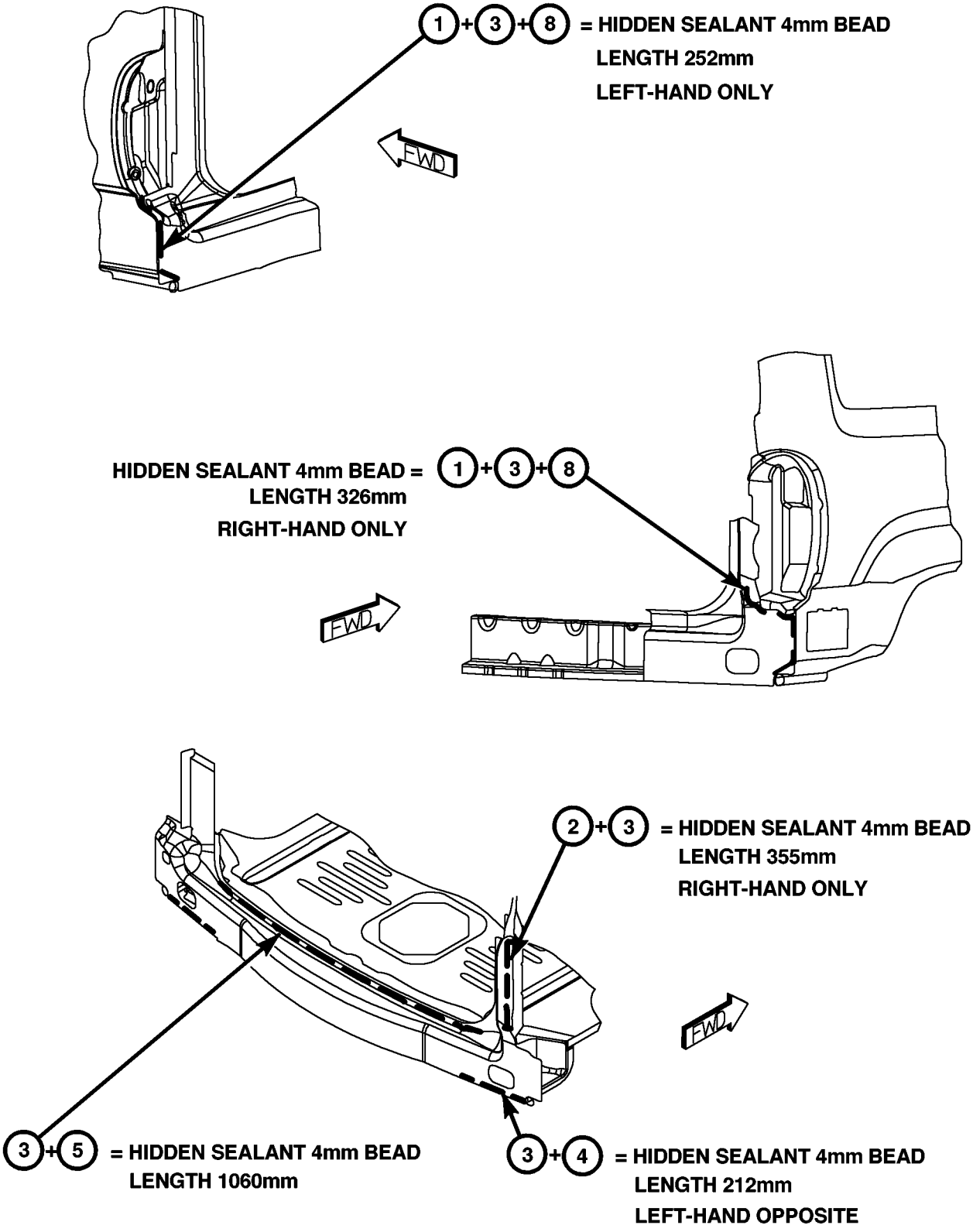

Fig. 93 SWING GATE OPENING

SEALER LOCATIONS (Continued)

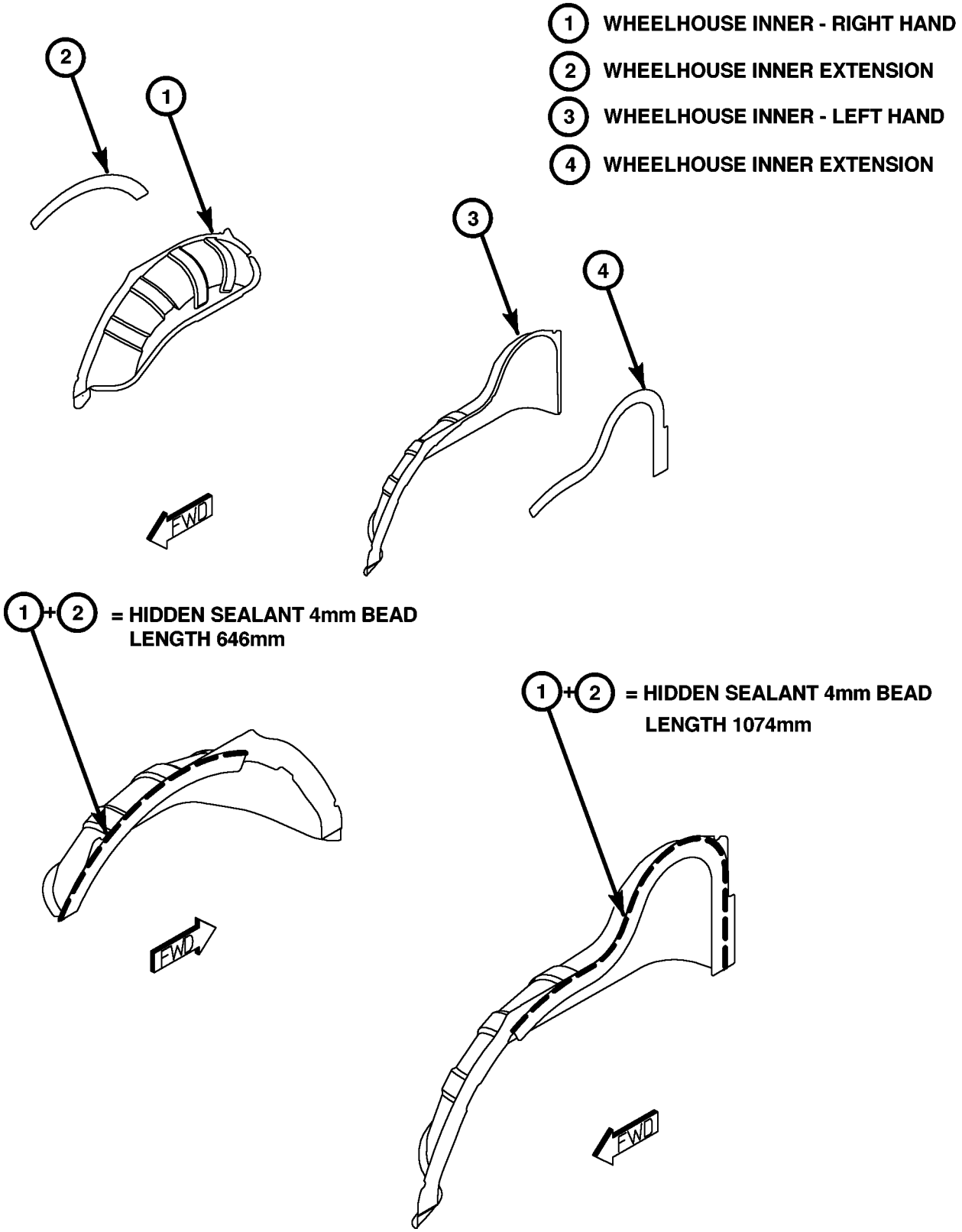

Fig. 94 WHEELHOUSES

SEALER LOCATIONS (Continued)

1. BODY SIDE OUTER PANEL
2. REAR OUTER WHEELHOUSE
3. WHEELHOUSE INNER EXTENSION
4. BODY SIDE INNER PANEL
5. REAR INNER WHEELHOUSE
6. BODY SIDE SILL
7. REAR FLOOR PAN
8. D-PILLAR LOWER TO FLOOR GUSSET
9. REAR CROSSMEMBER
10. REAR GATE OPENING PANEL

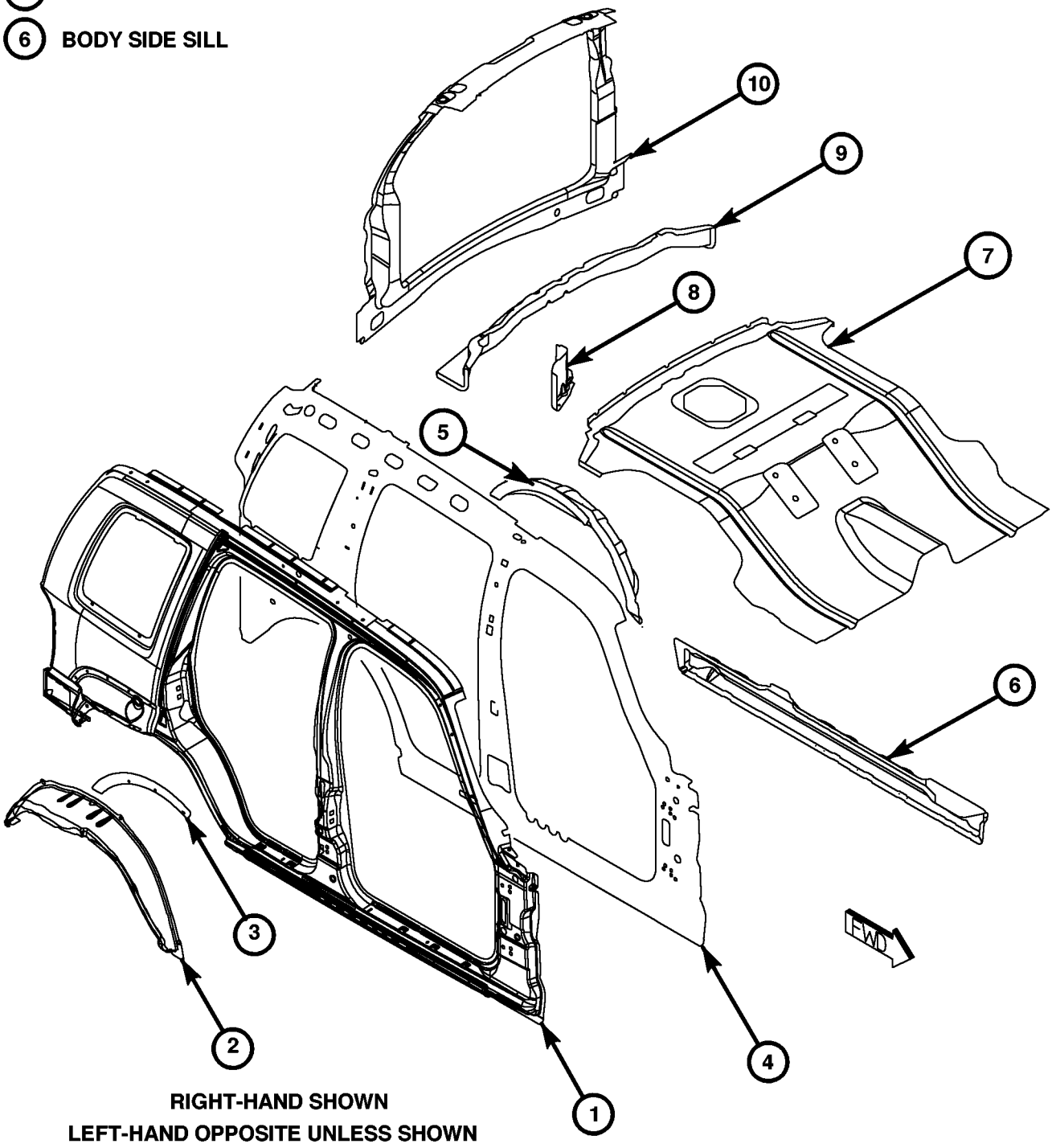

Fig. 95 BODY SIDE PANEL ASSEMBLY

SEALER LOCATIONS (Continued)

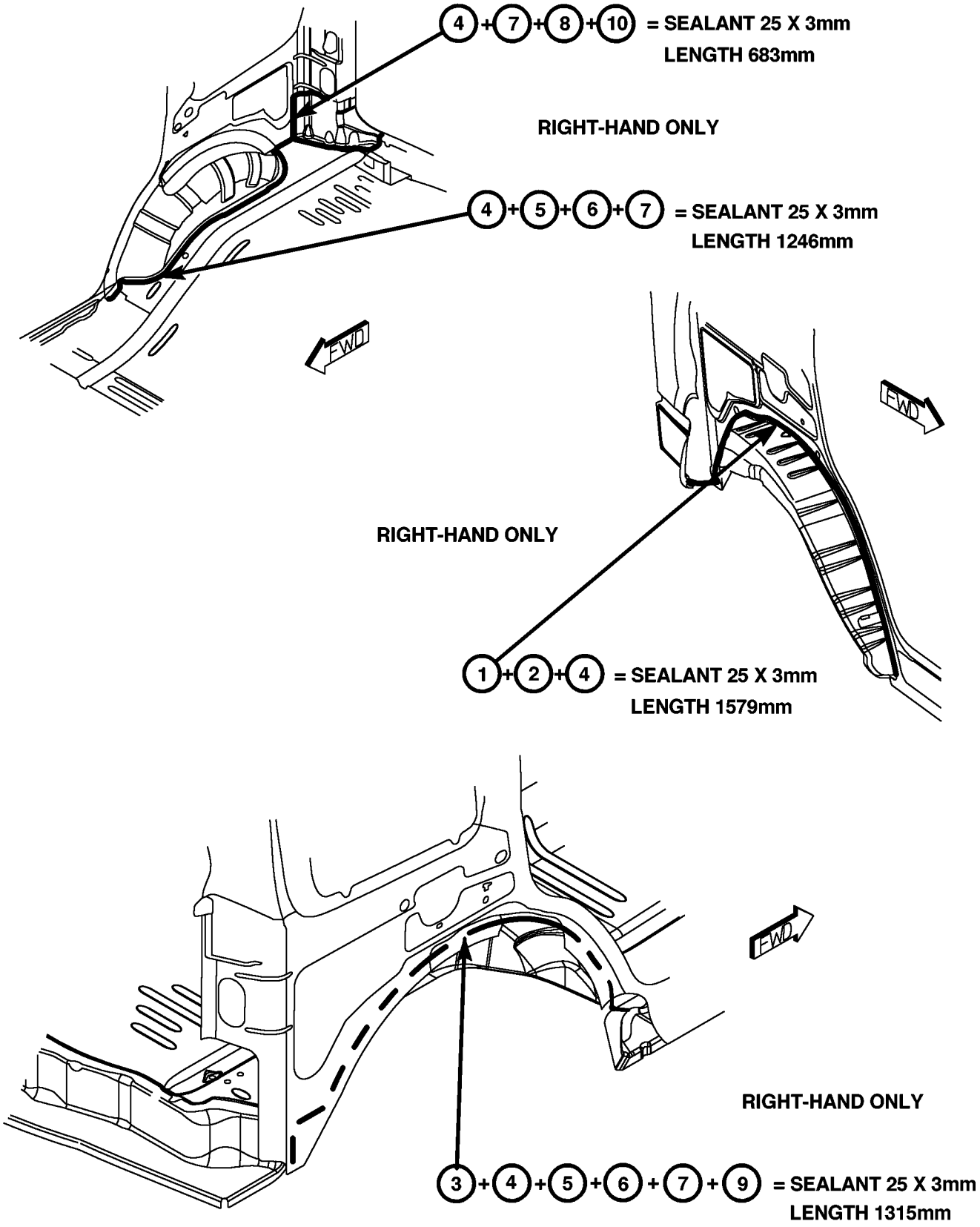

Fig. 96 WHEELHOUSES

SEALER LOCATIONS (Continued)

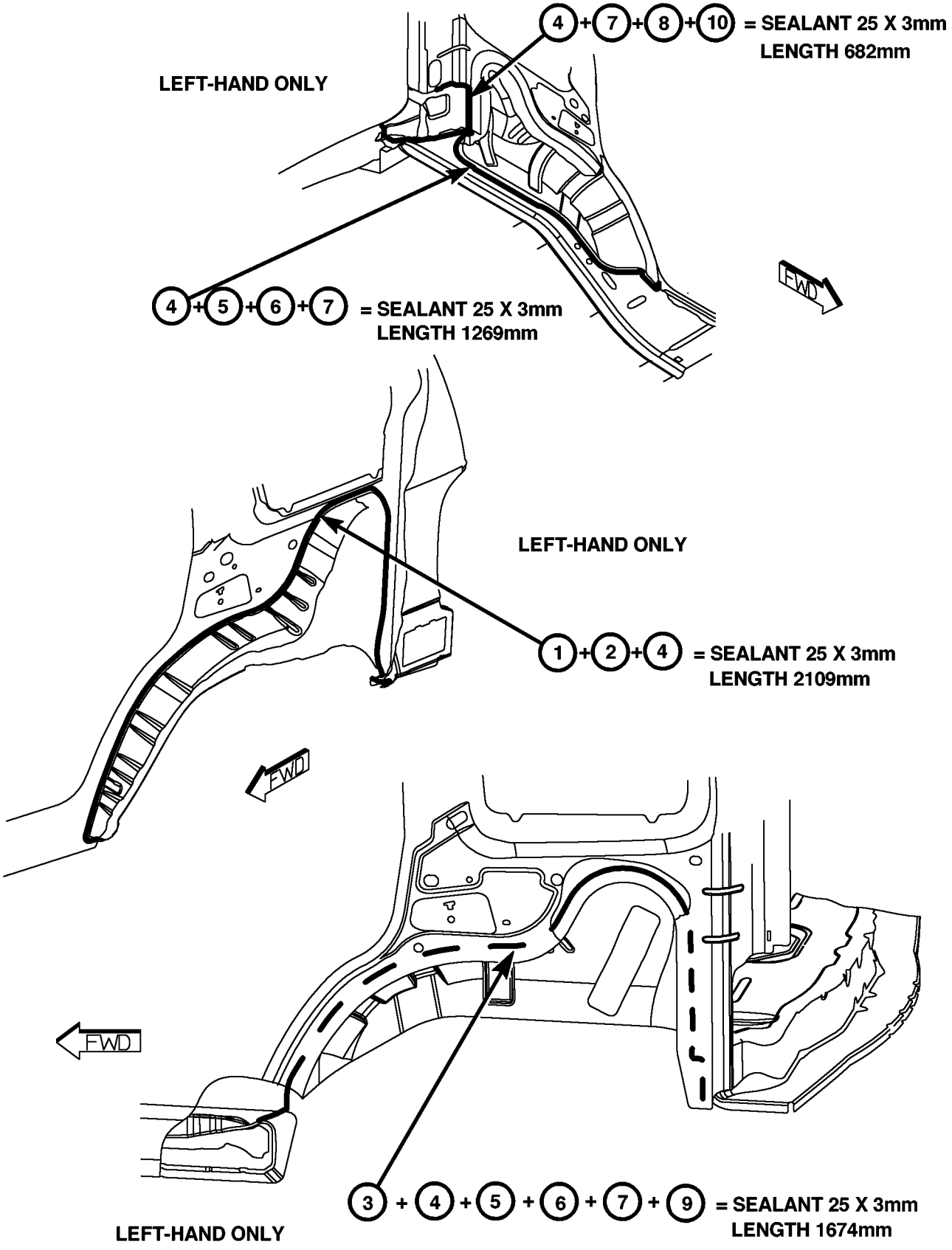

Fig. 97 WHEELHOUSES

SEALER LOCATIONS (Continued)

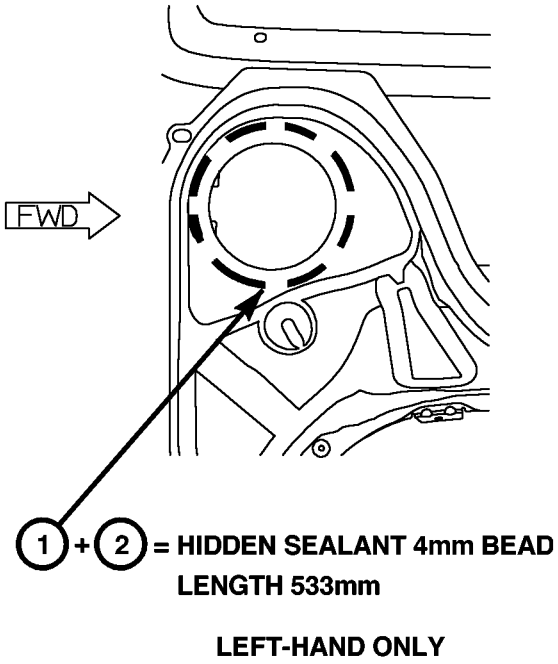

Fig. 98 WHEELHOUSE

SEALER LOCATIONS (Continued)

1. ROOF PANEL
2. ROOF HEADER - FRONT
3. ROOF BOW - FRONT
4. ROOF BOW - REAR
5. ROOF HEADER - REAR

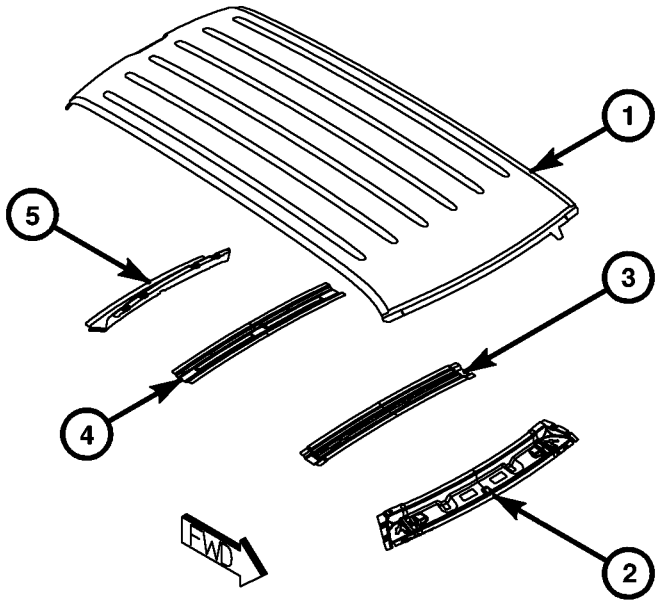

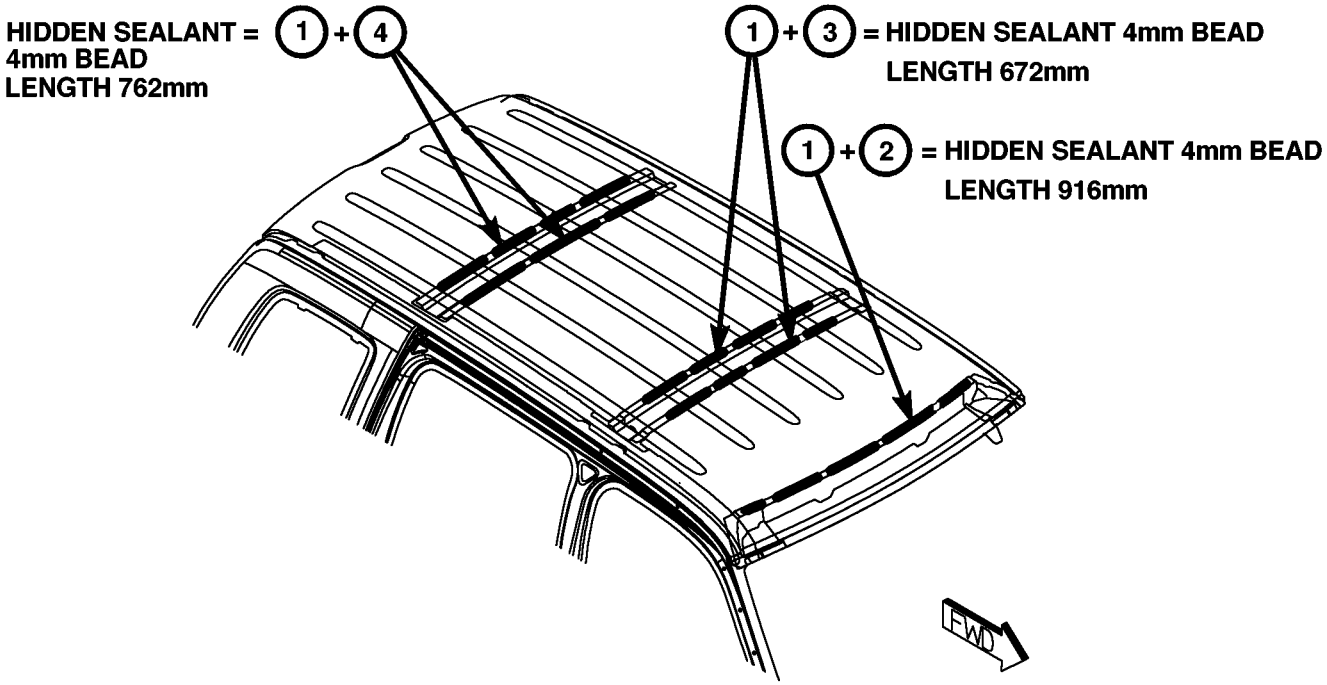

Fig. 99 ROOF PANEL ASSEMBLY

SEALER LOCATIONS (Continued)

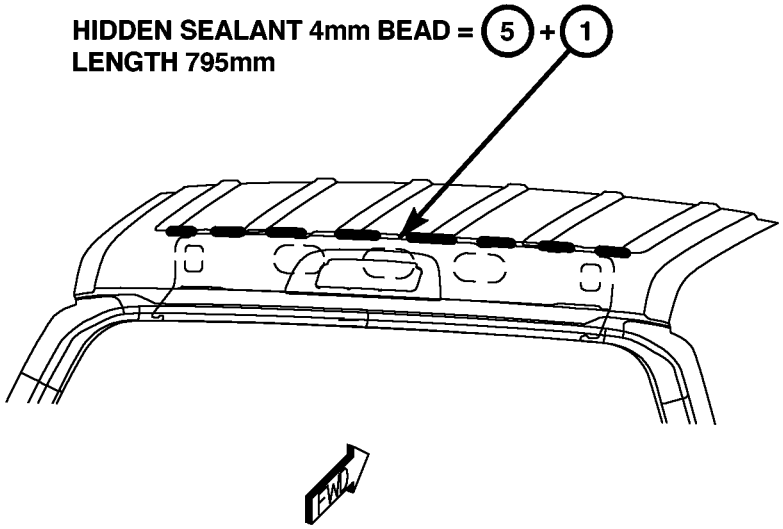

Fig. 100 ROOF PANEL/REAR ROOF HEADER

OPENING DIMENSIONS

SPECIFICATIONS

INDEX

DESCRIPTION	FIGURE
ENGINE COMPARTMENT	(101)
WINDSHIELD OPENING	(102)
BODY SIDE OPENINGS	(103)
SWING GATE OPENING	(104)

OPENING DIMENSIONS (Continued)

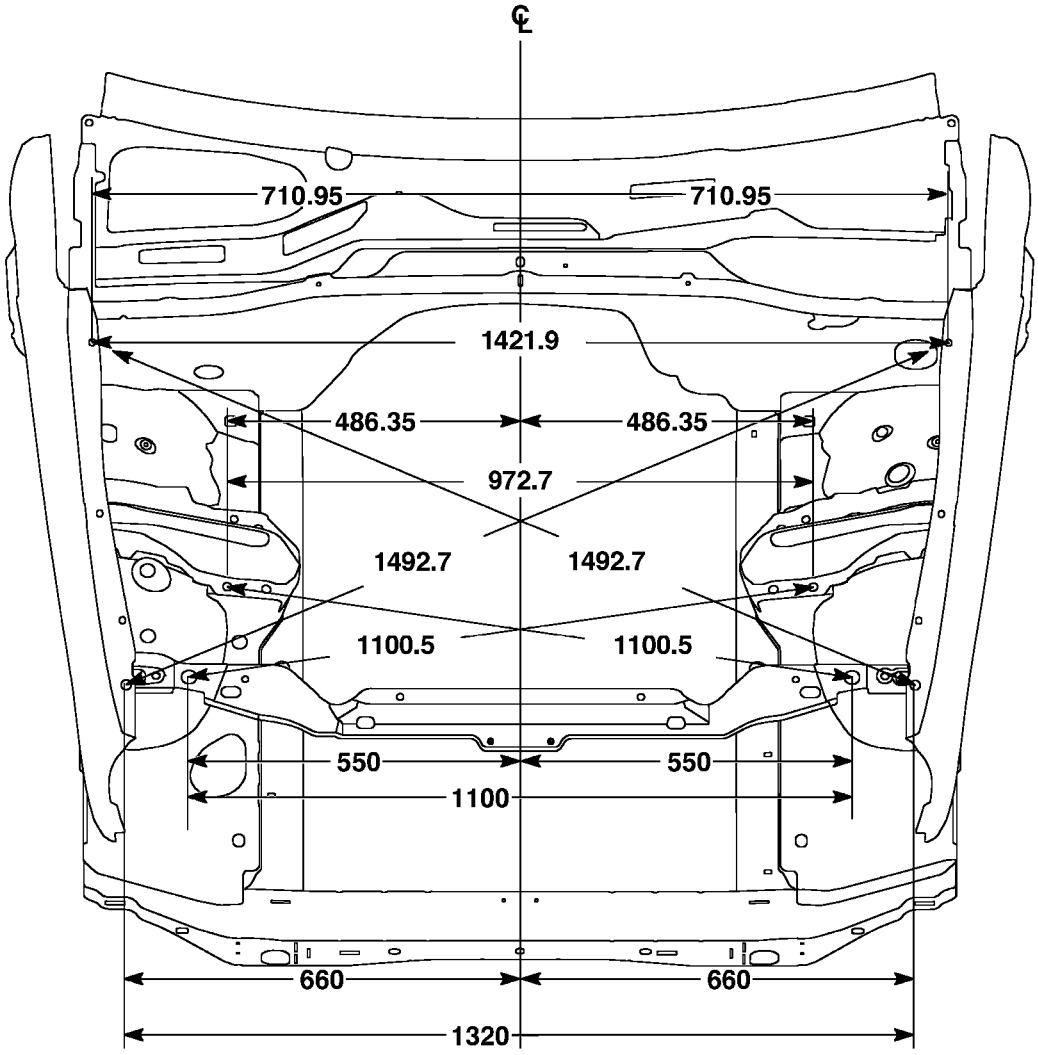

ALL DIMENSIONS ACTUAL

ALL DIMENSIONS IN mm

ALL DIMENSIONS ARE FROM CENTER OF PLP OR CONSTANT HOLE CENTER.

80c9d32f

Fig. 101 ENGINE COMPARTMENT

OPENING DIMENSIONS (Continued)

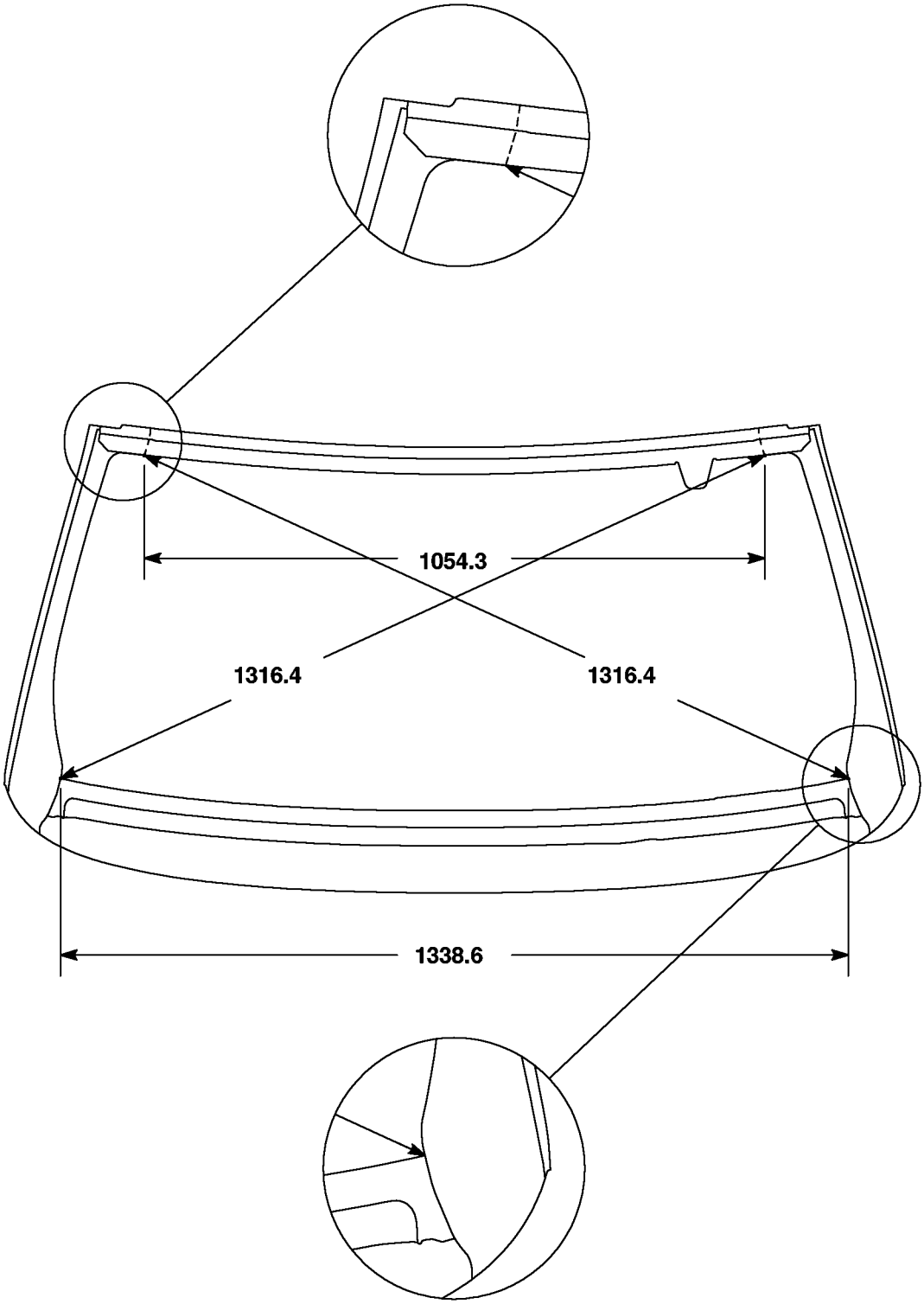

ALL DIMENSIONS ACTUAL

ALL DIMENSIONS IN mm

ALL DIMENSIONS ARE FROM PANEL CONNECTIONS.

Fig. 102 WINDSHIELD OPENING

OPENING DIMENSIONS (Continued)

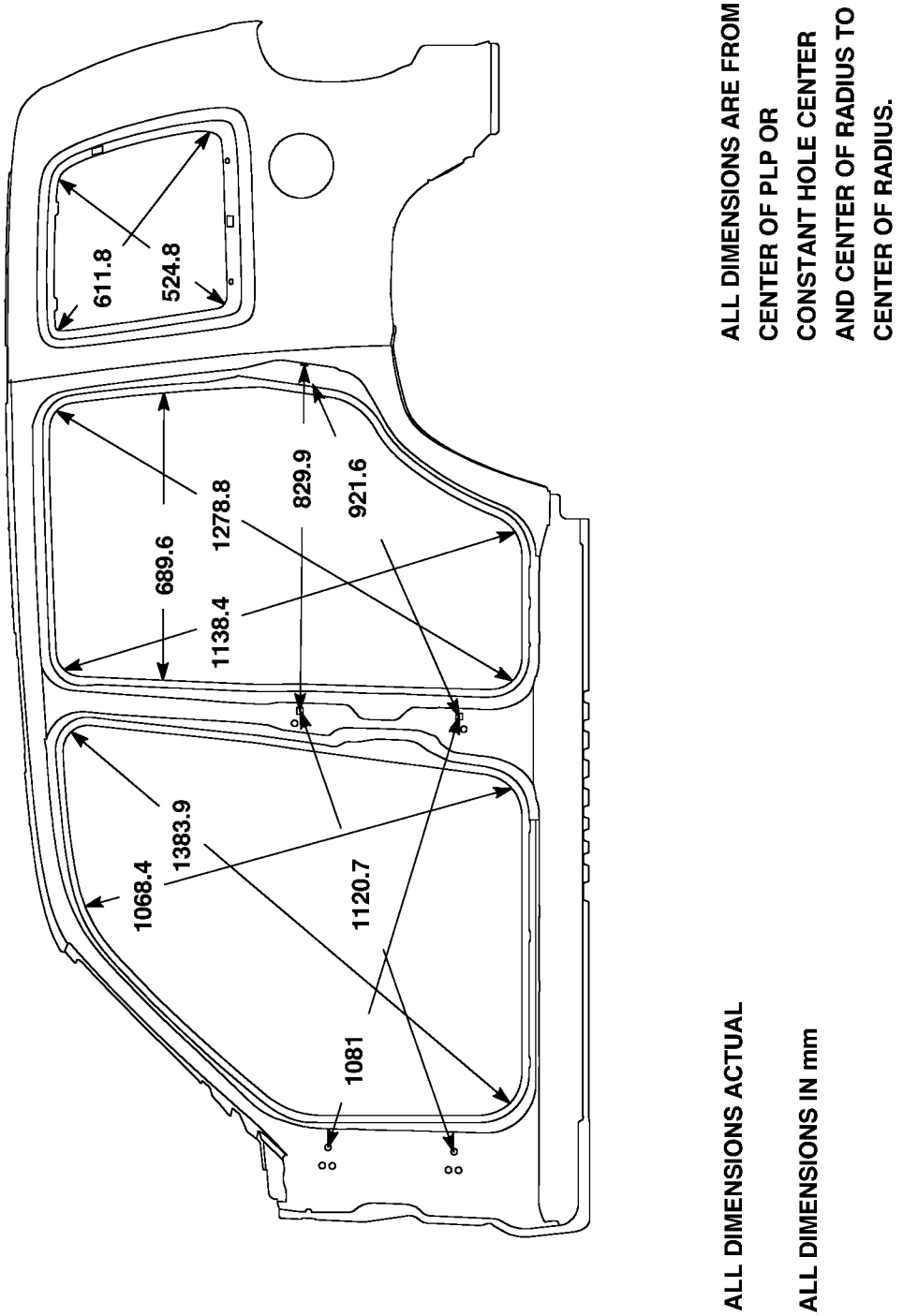

Fig. 103 BODY SIDE OPENINGS

OPENING DIMENSIONS (Continued)

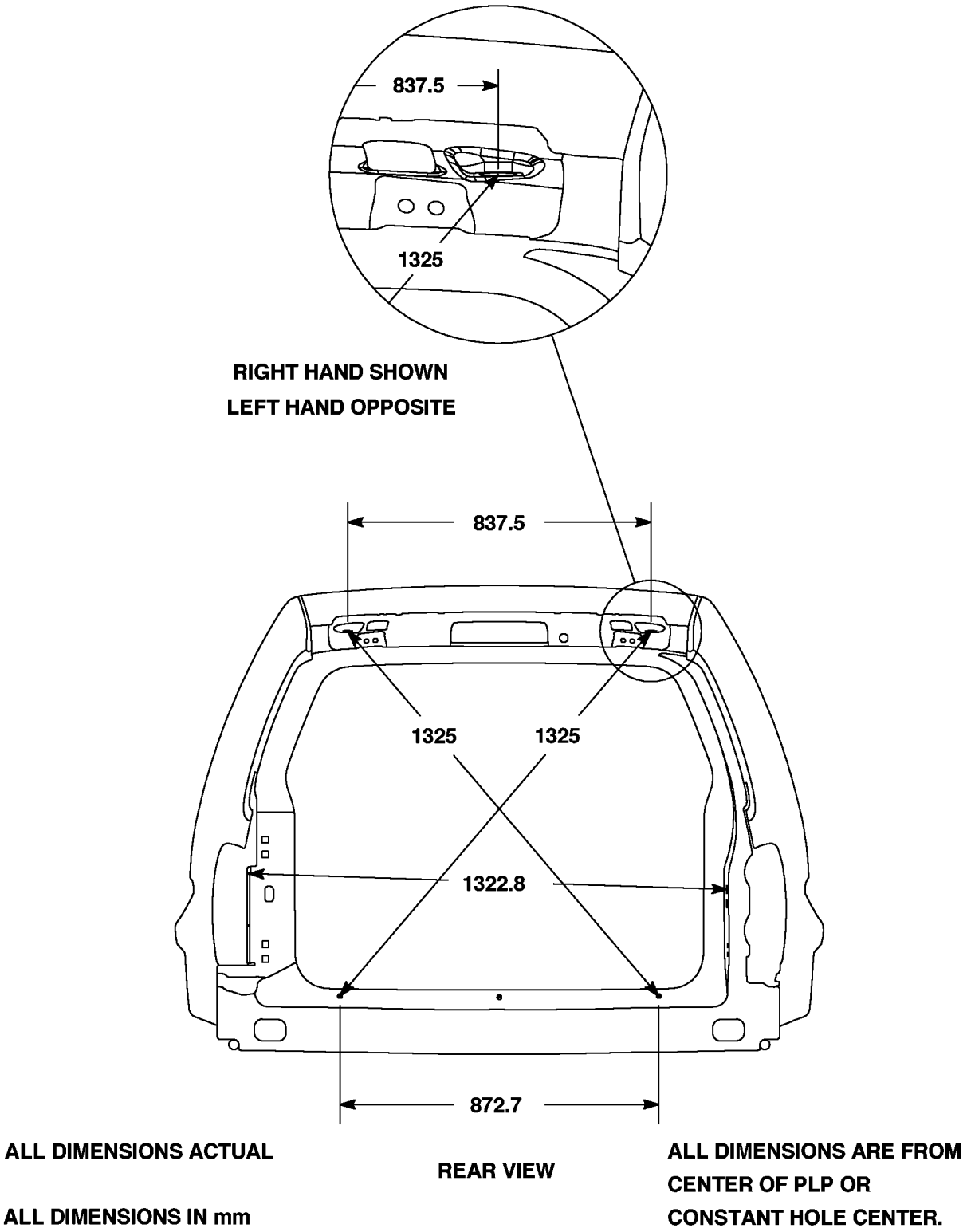

Fig. 104 SWING GATE OPENING

GAP AND FLUSH

SPECIFICATIONS

GAP & FLUSH DIMENSIONS INDEX

DESCRIPTION	FIGURE
FRONT QUADRANT	(105)
REAR QUADRANT	(106)

GAP AND FLUSH (Continued)

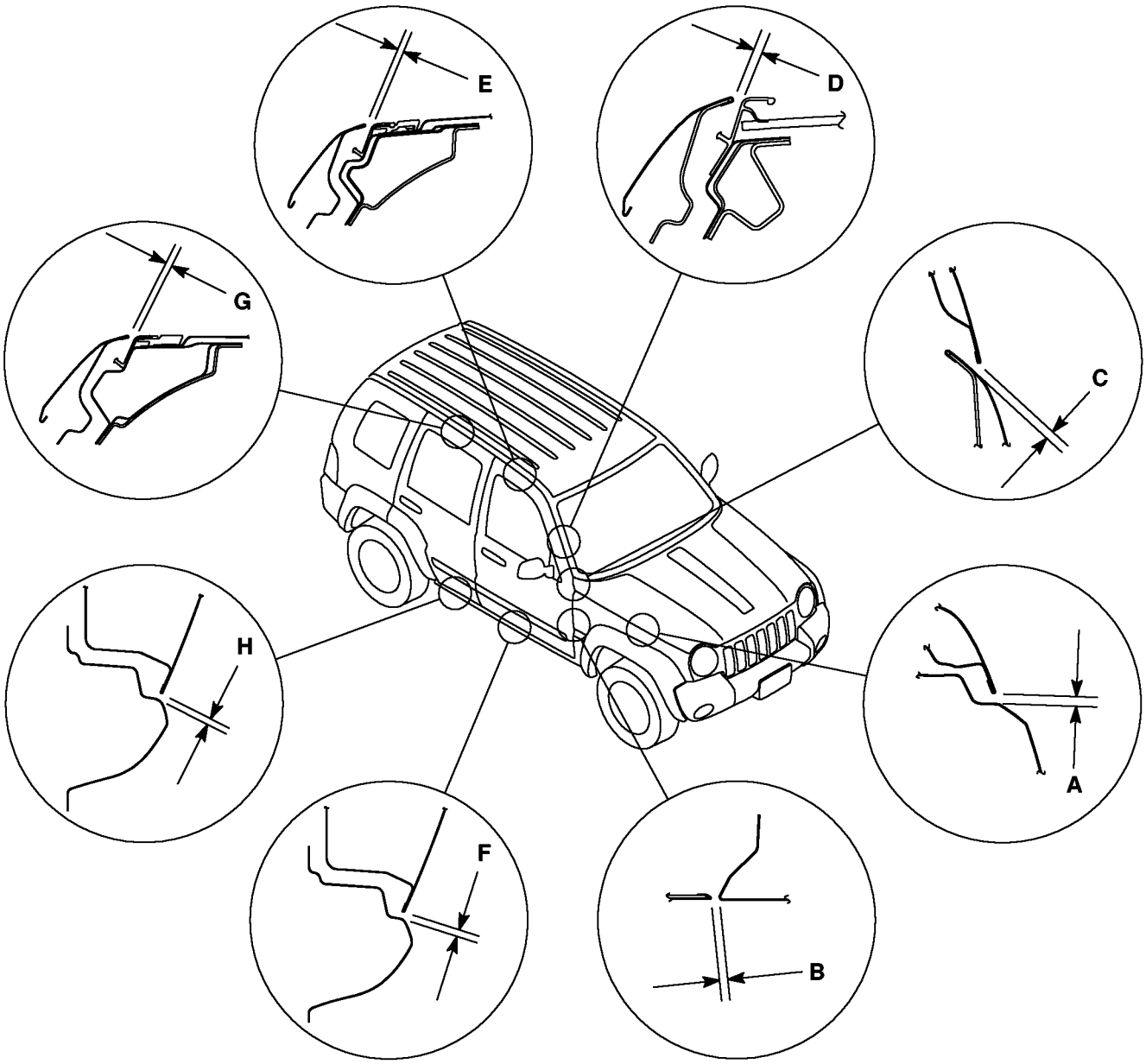

Fig. 105 GAP & FLUSH/FRONT QUADRANT

NOTE:
All measurements are in mm.

O/F = Over Flush

U/F = Under Flush

DIMENSION	GAP	FLUSH	DIMENSION	GAP	FLUSH
A	6.0 +/- 2.0	O/F 12.0 +/- 2.0	E	5.0 +/- 1.5	O/F 3.0 +/- 1.5
B	5.0 +/- 1.0	O/F 0.5 +/- 1.5	F	6.0 +/- 2.0	—
C	6.0 +1.5/- 2.0	—	G	5.0 +/- 1.5	O/F 3.0 +/- 1.5
D	5.0 +1.0/- 2.0	O/F 5.0 +/- 1.5	H	6.0 +/- 2.0	—

GAP AND FLUSH (Continued)

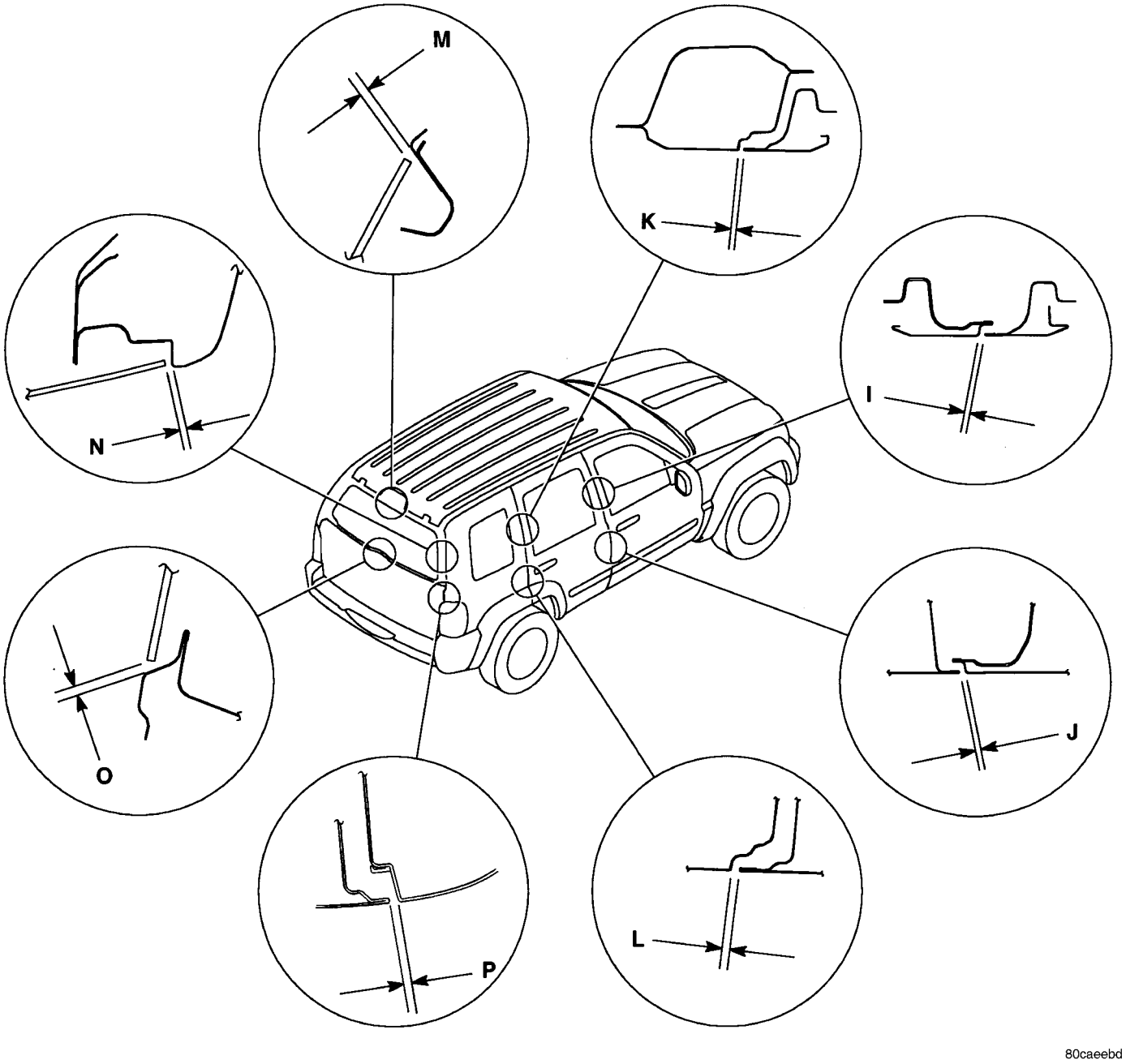

Fig. 106 GAP & FLUSH/REAR QUADRANT

NOTE:
All measurements are in mm.

O/F = Over Flush

U/F = Under Flush

DIMENSION	GAP	FLUSH	DIMENSION	GAP	FLUSH
I	5.0 +/- 1.0	0.0 +/- 1.5	M	6.0 +/- 1.5	U/F 4.7 +2.5/-1.0
J	5.0 +/- 1.0	0.0 +/- 1.5	N	6.0 +/- 1.5	U/F 4.0 +2.5/-1.0
K	5.0 +/- 1.0	0.0 +/- 1.5	O	6.0 +/- 1.5	0.0 - 2.0 O/F
L	5.0 +/- 1.0	0.0 +/- 1.5	P	5.0 +/- 1.0	U/F 0.5 +/- 1.0

HEATING & AIR CONDITIONING

TABLE OF CONTENTS

	page
HEATING & AIR CONDITIONING	
DESCRIPTION	1
OPERATION	2
DIAGNOSIS AND TESTING	
A/C PERFORMANCE	3
HEATER PERFORMANCE	7
SPECIFICATIONS	
HEATING-A/C SYSTEM	8
CONTROLS	10
DISTRIBUTION	35
PLUMBING	46

HEATING & AIR CONDITIONING

DESCRIPTION

A manually controlled single zone type heating-air conditioning system or a manually controlled heater-only system is available on this model (depending on market).

To maintain the performance level of the heating, ventilation and air conditioning (HVAC) system, the engine cooling system must be properly maintained. The use of a bug screen is not recommended. Any obstructions in front of the radiator or A/C condenser will reduce the performance of the A/C and engine cooling systems.

The engine cooling system includes the radiator, thermostat, radiator hoses and the engine coolant pump. Refer to 7 - Cooling for more information before opening or attempting any service to the engine cooling system.

All vehicles are equipped with a common heater, ventilation and air conditioning (HVAC) housing (Fig. 1). The system combines air conditioning, heating, and ventilating capabilities in a single unit mounted within the passenger compartment under the instrument panel. The HVAC housing includes:

- Blower motor
- Blower motor resistor
- Recirculation door and actuator
- Heater core
- A/C evaporator (A/C system only)
- Blend door and actuator
- Floor/defrost and panel/demister doors and actuators

On heater-only systems, the A/C evaporator is omitted from the housing.

Based upon the system and mode selected, conditioned air can exit the heater-only or heater-A/C system housing through one or a combination of the three main housing outlets: defrost, panel or floor. The defrost outlet is located on the top of the housing, the panel outlet is located on the face of the housing and the floor outlet is located on the bottom of the housing. Once the conditioned air exits the unit housing, it is further directed through molded plastic ducts to the various outlets in the vehicle interior. These outlets and their locations are as follows:

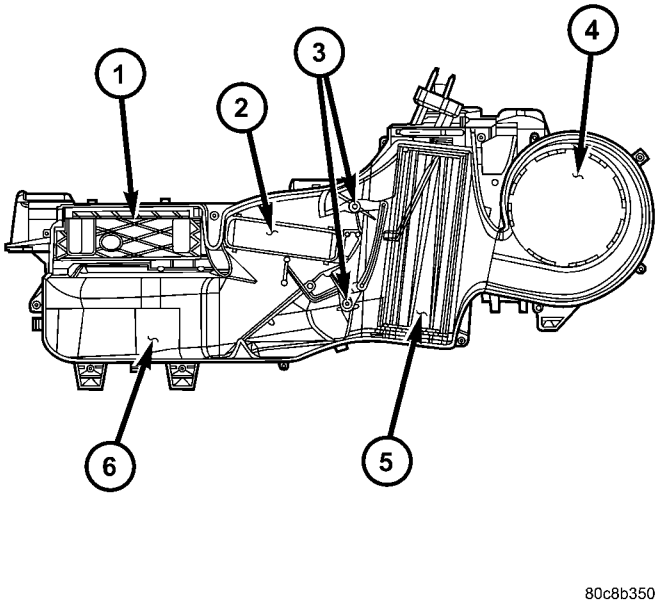

Fig. 1 HVAC Housing - Typical

1 - FLOOR/DEFROSTER DOOR
2 - HEATER CORE
3 - BLEND DOORS
4 - BLOWER MOTOR HOUSING
5 - A/C EVAPORATOR (A/C SYSTEM ONLY)
6 - LOWER HVAC HOUSING

- **Defroster Outlet** - Dual defroster outlets are located in the center of the instrument panel top cover, near the base of the windshield.
- **Side Window Demister Outlets** - There are two side window demister outlets, one is located at

each outboard end of the instrument panel top cover, near the belt line at the A-pillars.

- **Panel Outlets** - There are four panel outlets in the instrument panel, one located near each outboard end of the instrument panel facing the rear of the vehicle and two located near the top of the instrument panel center bezel.
- **Front Floor Outlets** - There are two front floor outlets, one located above each side of the center of the floor panel near the dash panel.
- **Rear Floor Outlets** - There are four rear floor outlets, two located on each side of the floor console near the rear of each front seat.

OPERATION

Both the single zone manual temperature control (MTC) heating-A/C system and the heater-only system are blend-air type systems. In a blend-air heating-A/C system (Fig. 2), a blend-air door controls the amount of conditioned air that is allowed to flow through, or around, the heater core. The temperature control determines the discharge air temperature by operating the blend door actuator, which move the blend-air door. This design allows almost immediate control of output air temperatures.

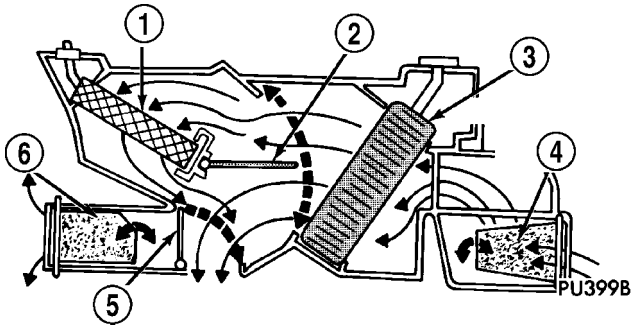

Fig. 2 Typical Blend-Air HVAC System

1 - HEATER CORE
2 - BLEND-AIR DOOR (2 DOORS IN DUAL ZONE)
3 - A/C EVAPORATOR
4 - RECIRCULATION-AIR DOOR
5 - FLOOR MODE-AIR DOOR
6 - PANEL/DEFROST MODE-AIR DOOR

The heating and A/C systems pulls outside (ambient) air through the cowl opening at the base of the windshield, then into the air inlet housing above the heating, ventilation and air conditioning (HVAC) housing. On models equipped with A/C, the air passes through the A/C evaporator. Air flow can be directed either through or around the heater core. This is done by adjusting the blend door with the temperature control knob on the A/C-heater control in the instrument panel. The air flow can then be directed from the panel, floor and defrost outlets in various combinations using the mode control located on the A/C-heater control. Air flow velocity can be adjusted with the blower fan speed control located on the A/C-heater control.

On all models, the outside air intake can be shut off by selecting the Recirculation Mode. This will operate a vacuum actuated recirculating-air door that closes off the fresh air intake and recirculates the air that is already inside the vehicle.

The A/C compressor can be engaged by turning the mode control clockwise from the Off position. It can also be engaged by placing the mode control in the mix to defrost positions. This will remove heat and humidity from the air before it is directed through or around the heater core. The mode control on the A/C-heater control is used to also direct the conditioned air to the selected system outlets. The mode control uses engine vacuum to control the mode-air doors.

The defroster outlet receives airflow from the HVAC housing through the molded plastic defroster duct, which is connected to the HVAC housing defroster outlet. The airflow from the defroster outlet is directed by fixed vanes in the defroster outlet grille and cannot be adjusted.

The side window demister outlets receive airflow from the HVAC housing through the molded plastic defroster duct and molded plastic demister ducts. The airflow from the side window demister outlets is directed by fixed vanes in the demister outlet grilles and cannot be adjusted. The demisters direct air from the HVAC housing through the outlets located on the top corners of the instrument panel. The demisters operate when the mode control is positioned in the floor-defrost and defrost-only settings. Some air may be noticeable from the demister outlets when the mode control is in the bi-level to floor positions.

The panel outlets receive airflow from the HVAC housing through a molded plastic main panel duct, center panel duct and two end panel ducts. The two end panel ducts direct airflow to the left and right instrument panel outlets, while the center panel duct directs airflow to the two center panel outlets. Each of these outlets can be individually adjusted to direct the flow of air.

The floor outlets receive airflow from the HVAC housing through the floor distribution duct. The front floor outlets are integral to the molded plastic floor distribution duct, which is secured to the bottom of the HVAC housing. The floor outlets cannot be adjusted.

HEATING & AIR CONDITIONING (Continued)

NOTE: It is important to keep the air intake opening clear of debris. Leaf particles and other debris that is small enough to pass through the cowl opening screen can accumulate within the HVAC housing. The closed, warm, damp and dark environment created within the housing is ideal for the growth of certain molds, mildews and other fungi. Any accumulation of decaying plant matter provides an additional food source for fungal spores, which enter the housing with the fresh intake-air. Excess debris, as well as objectionable odors created by decaying plant matter and growing fungi can be discharged into the passenger compartment during heater-A/C operation if the air intake opening is not kept clear of debris.

The A/C system on models so equipped is designed for the use of non-CFC, R-134a refrigerant and uses an A/C fixed orifice tube located in the liquid line to meter the flow of refrigerant to the A/C evaporator. The A/C evaporator cools and dehumidifies the incoming air prior to blending it with the heated air. To maintain minimum evaporator temperature and prevent evaporator freezing, the A/C clutch is cycled on and off by the A/C low pressure switch mounted on the accumulator.

DIAGNOSIS AND TESTING

A/C PERFORMANCE

The A/C system is designed to provide the passenger compartment with low temperature and low humidity air. The A/C evaporator, located in the HVAC housing is cooled to temperatures near the freezing point. As warm damp air passes over the fins of the A/C evaporator, the air transfers its heat to the refrigerant in the evaporator coils and the moisture in the air condenses on the evaporator fins. During periods of high heat and humidity, an A/C system will be more effective in the Recirculation mode (max-A/C). With the system in the Recirculation mode, only air from the passenger compartment passes through the A/C evaporator. As the passenger compartment air dehumidifies, the A/C system performance levels rise.

Humidity has an important bearing on the temperature of the air delivered to the interior of the vehicle. It is important to understand the effect that humidity has on the performance of the A/C system. When humidity is high, the A/C evaporator has to perform a double duty. It must lower the air temperature, and it must lower the temperature of the moisture in the air that condenses on the evaporator fins. Condensing the moisture in the air transfers heat energy into the evaporator fins and coils. This reduces the amount of heat the A/C evaporator can absorb from the air. High humidity greatly reduces the ability of the A/C evaporator to lower the temperature of the air.

However, evaporator capacity used to reduce the amount of moisture in the air is not wasted. Wringing some of the moisture out of the air entering the vehicle adds to the comfort of the passengers. Although, an owner may expect too much from their A/C system on humid days. A performance test is the best way to determine whether the system is performing up to design standards. This test also provides valuable clues as to the possible cause of trouble with the A/C system. The ambient air temperature in the location where the vehicle will be tested must be a minimum of 21° C (70° F) for this test.

PERFORMANCE TEST PROCEDURE

WARNING: Refer to the applicable warnings and cautions for this system before performing the following operation (Refer to 24 - HEATING & AIR CONDITIONING/PLUMBING - WARNINGS) and (Refer to 24 - HEATING & AIR CONDITIONING/PLUMBING - CAUTIONS). Failure to follow the warnings and cautions could result in possible personal injury or death.

NOTE: When connecting the service equipment coupling to the line fitting, verify that the valve of the coupling is fully closed. This will reduce the amount of effort required to make the connection.

(1) Connect a tachometer and a manifold gauge set or an A/C recycling/charging station.

(2) Set the mode control to the Recirculation mode, the temperature control to the full cool position, and the blower fan to the highest speed position.

(3) Start the engine and hold the idle at 1,000 rpm with the A/C compressor clutch engaged.

(4) The engine should be warmed up to operating temperature with the doors closed and windows open.

(5) Insert a thermometer in the driver side center panel air outlet and operate the engine for five minutes.

HEATING & AIR CONDITIONING (Continued)

(6) The compressor clutch may cycle, depending upon the ambient temperature and humidity. If the clutch cycles, unplug the wire harness connector from the A/C low pressure switch located on the accumulator (Fig. 3). Place a jumper wire across the terminals of the A/C low pressure switch wire harness connector.

(7) With the compressor clutch engaged, record the air outlet discharge temperature, the discharge pressure (high side service port) and the suction pressure (low side service port). Compare the air temperature at the center panel outlet and the A/C compressor discharge pressure (high side) to the A/C Performance Temperature and Pressure chart.

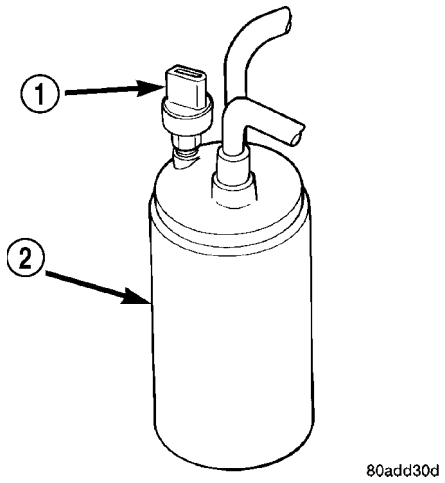

Fig. 3 A/C Low Pressure Switch - Typical

1 - A/C LOW PRESSURE SWITCH
2 - ACCUMULATOR

A/C PERFORMANCE TEMPERATURE AND PRESSURE

Ambient Air Temperature	21° C (70° F)	27° C (80° F)	32° C (90° F)	38° C (100° F)	43° C (110° F)
Air Temperature at Center Panel Outlet	7° C (45° F)	7° C (45° F)	13° C (55° F)	13° C (55° F)	18° C (64° F)
Compressor Inlet Pressure at Service Port (Low Side)	138 to 207 kPa (20 to 30 psi)	172 to 241 kPa (25 to 35 psi)	207 to 276 kPa (30 to 40 psi)	241 to 310 kPa (35 to 45 psi)	276 to 345 kPa (40 to 50 psi)
Condensor Outlet Pressure at Service Port (High Side)	1034 to 1724 kPa (150 to 250 psi)	1379 to 2068 kPa (200 to 300 psi)	1724 to 2413 kPa (250 to 350 psi)	1999 to 2689 kPa (290 to 390 psi)	2413 to 2965 kPa (350 to 430 psi)

HEATING & AIR CONDITIONING (Continued)

(8) If the air outlet temperature fails to meet the specifications in the A/C Performance Temperature and Pressure chart, or if the A/C compressor discharge pressure is high, refer to the A/C Pressure Diagnosis chart.

A/C PRESSURE DIAGNOSIS

Condition	Possible Causes	Correction
Rapid A/C clutch cycling (ten or more cycles per minute).	1. Low refrigerant system charge.	1. See Refrigerant System Leaks in this group. Test the refrigerant system for leaks. Repair, evacuate and charge the refrigerant system, if required.
Equal pressures, but the A/C clutch does not engage.	1. No refrigerant in the refrigerant system.	1. See Refrigerant System Leaks in this group. Test the refrigerant system for leaks. Repair, evacuate and charge the refrigerant system, if required.
	2. Faulty fuse.	2. Check the fuses in the power distribution center and the junction block. Repair the shorted circuit or component and replace the fuses, if required. Refer to Group 8.
	3. Faulty A/C clutch field coil.	3. See A/C Compressor Clutch in this group. Test the A/C clutch field coil and replace, if required.
	4. Faulty A/C clutch relay.	4. See A/C Clutch Relay in this group. Test the A/C clutch relay and relay circuits. Repair the circuits or replace the relay, if required.
	5. Improperly installed or faulty A/C low pressure switch.	5. See A/C Low Pressure Switch in this group. Test the A/C low pressure switch and tighten or replace, if required.
	6. Faulty A/C high pressure switch (diesel engine application).	6. See A/C High Pressure Switch in this group. Test the A/C high pressure switch and replace, if required.
	7. Faulty A/C pressure transducer (gasoline engine application).	7. See A/C Pressure Transducer in this group. Test the A/C pressure transducer and replace, if required.
	8. Faulty powertrain control module (PCM) or engine control module (ECM), depending on engine application.	8. Refer to the proper Diagnostic Procedures manual for testing of the PCM or ECM. Test the PCM or ECM and replace, if required.
Normal pressures, but A/C Performance Test air temperatures at center panel outlet are too high.	1. Excessive refrigerant oil in system.	1. See Refrigerant Oil Level in this group. Recover the refrigerant from the refrigerant system and inspect the refrigerant oil content. Restore the refrigerant oil to the proper level, if required.
	2. Blend door actuator improperly installed or faulty.	2. See Blend Door Actuator in this group. Inspect the actuator for proper operation and replace, if required.
	3. Blend-air door inoperative or sealing improperly.	3. See HVAC Housing in this group. Inspect the blend-air door for proper operation and sealing and correct, if required.

HEATING & AIR CONDITIONING (Continued)

Condition	Possible Causes	Correction
The low side pressure is normal or slightly low, and the high side pressure is too low.	1. Low refrigerant system charge.	1. See Refrigerant System Leaks in this group. Test the refrigerant system for leaks. Repair, evacuate and charge the refrigerant system, if required.
	2. Refrigerant flow through the A/C accumulator is restricted.	2. See A/C Accumulator in this group. Replace the restricted accumulator, if required.
	3. Refrigerant flow through the A/C evaporator is restricted.	3. See A/C Evaporator in this group. Replace the restricted A/C evaporator, if required.
	4. Faulty A/C compressor.	4. See A/C Compressor in this group. Replace the A/C compressor, if required.
The low side pressure is normal or slightly high, and the high side pressure is too high.	1. A/C Condenser air flow restricted.	1. Check the A/C condenser for damaged fins, foreign objects obstructing air flow through the condenser fins, and missing or improperly installed air seals. Clean, repair, or replace components as required.
	2. Inoperative radiator cooling fan.	2. Test the radiator cooling fan and replace, if required. Refer to Group 7.
	3. Refrigerant system overcharged.	3. See Refrigerant System Charge Level in this group. Recover the refrigerant from the refrigerant system. Charge the refrigerant system to the proper level, if required.
	4. Air in the refrigerant system.	4. See Refrigerant System Leaks in this group. Test the refrigerant system for leaks. Repair, evacuate and charge the refrigerant system, if required.
	5. Engine overheating.	5. Test the engine cooling system and repair, if required. Refer to Group 7.
The low side pressure is too high, and the high side pressure is too low.	1. Accessory drive belt slipping.	1. Inspect the accessory drive belt condition and tension. Tighten or replace the accessory drive belt, if required. Refer to Group 7.
	2. Faulty A/C orifice tube.	2. See A/C Orifice Tube in this group. Replace the liquid line, if required.
	3. Faulty A/C compressor.	3. See A/C Compressor in this group. Replace the A/C compressor, if required.
The low side pressure is too low, and the high side pressure is too high.	1. Restricted refrigerant flow through the refrigerant lines.	1. See Liquid Line, Suction Line and A/C Discharge Line in this group. Inspect the refrigerant lines for kinks, tight bends or improper routing. Correct the routing or replace the refrigerant line, if required.
	2. Restricted refrigerant flow through the A/C orifice tube.	2. See A/C Orifice Tube in this group. Replace the liquid line, if required.
	3. Restricted refrigerant flow through the A/C condenser.	3. See A/C Condenser in this group. Replace the restricted condenser, if required.

HEATING & AIR CONDITIONING (Continued)

HEATER PERFORMANCE

WARNING: Review safety precautions and warnings in this group before performing this procedure (Refer to 24 - HEATING & AIR CONDITIONING/ PLUMBING - WARNINGS) and (Refer to 24 - HEATING & AIR CONDITIONING/PLUMBING - CAUTIONS). Failure to follow the warnings and cautions could result in possible personal injury or death.

Check the coolant level, drive belt tension, radiator air flow and fan operation. Start engine and allow to warm up to normal operating temperature.

WARNING: Do not remove radiator cap when engine is hot, personal injury can result.

If vehicle has been run recently, wait 15 minutes before removing the radiator cap. Place a rag over the cap and turn it to the first safety stop. Allow pressure to escape through the overflow tube. When the system pressure stabilizes, remove the cap completely.

MAXIMUM HEATER OUTPUT: TEST AND ACTION

Engine coolant is provided to the heater system by two heater hoses. With the engine idling at normal operating temperature, set the temperature control to maximum heat, the mode control to the floor position, and the blower in the highest speed position. Using a test thermometer, check the temperature of the air being discharged from the floor outlets. Compare the test thermometer reading to the Heater Temperature Reference chart.

HEATER TEMPERATURE REFERENCE

Ambient Air Temperature	15.5° C (60° F)	21.1° C (70° F)	26.6° C (80° F)	32.2° C (90° F)
Minimum Air Temperature at Floor Outlet	52.2° C (126° F)	56.1° C (133° F)	59.4° C (139° F)	62.2° C (144° F)

If the floor outlet air temperature is insufficient, check that the cooling system is operating to specifications (Refer to 7 - COOLING/ENGINE - DIAGNOSIS AND TESTING). Both heater hoses should be HOT to the touch (the coolant return hose should be slightly cooler than the supply hose). If the coolant return hose is much cooler than the supply hose, locate and repair the engine coolant flow obstruction in heater system.

OBSTRUCTED COOLANT FLOW Possible locations or causes of obstructed coolant flow are as follows:

- Pinched or kinked heater hoses.
- Improper heater hose routing.
- Plugged heater hoses or supply and return ports at the cooling system connections.
- Plugged heater core.

If proper coolant flow through the cooling system is verified, and heater outlet air temperature is insufficient, a mechanical problem may exist.

MECHANICAL PROBLEMS

Possible causes of insufficient heat due to mechanical problems are as follows:

- Faulty engine thermostat.
- Faulty blend door actuator.
- Obstructed fresh air intake.
- Obstructed heater system outlets.
- Faulty blend-air door.

TEMPERATURE CONTROL

If the heater outlet air temperature cannot be adjusted with the temperature control on the A/C-heater control panel, the following could require service:

- Faulty blend door actuator.
- Faulty A/C-heater control.
- Faulty related wiring harness or connectors.
- Faulty blend-air door.

HEATING & AIR CONDITIONING (Continued)

SPECIFICATIONS

HEATING-A/C SYSTEM

A/C SYSTEM

Item	Description	Notes
A/C Compressor	Sanden SD-7 (2.4L/3.7L gasoline engines) Sanden PXF-18 (2.8L diesel engine)	SP-15 PAG oil
Freeze–up Control	A/C low pressure switch	Input to PCM, accumulator mounted - cycles clutch off below -1° C (30° F), cycles back on above 7.2° C (45° F)
Low psi Control	A/C low pressure switch	Opens below 141 kPa (20.5 psi), resets above 234 - 262 kPa (34 - 38 psi)
High psi Control	A/C high pressure switch (diesel engine)	A/C discharge line mounted - opens at discharge pressure above 3100 - 3375 kPa (450 - 490 psi), resets at 1860 - 2275 kPa (270 - 330 psi)
	A/C pressure transducer (gasoline engines)	A/C discharge line mounted - opens at discharge pressure above 2971 kPa (431 psi) and below 206 kPa (30 psi)
Refrigerant Charge Capacity	Refer to the A/C Underhood Specification Label located in the engine compartment.	R-134a refrigerant

Item	Description	Notes
A/C Clutch Coil Draw	2 - 3.9 amps	@ 11.5 - 12V @ 21° C (70° F)
A/C Clutch Air Gap	0.41 - 0.79 mm (0.016 - 0.031 in)	

HEATING & AIR CONDITIONING (Continued)

FASTENER TORQUE

Description	N·m	Ft. Lbs.	In. Lbs.
All Screws NOT Listed Below	2	–	17
A/C Condenser Bracket Bolts	5	–	44
A/C Compressor Clutch Plate Nut/Bolt	17.5	–	155
A/C Compressor Bolts - 3.7L	Front outboard and rear bolt - 55 Front inboard bolt - 40	Front outboard and rear bolt - 41 Front inboard bolt - 30	–
A/C Compressor Bolts - 2.4L and 2.8L Diesel	27	20	–
Accumulator Retaining Band Bolt	4.5	–	40
Accumulator Bracket Nuts	5	–	44
Automatic Transmission Cooler Bolts	5	–	44
HVAC Housing Nuts	6	–	53
Refrigerant Lines to Accumulator Nuts	9	–	80
Refrigerant Lines to Condenser Nuts	12	–	105
Refrigerant Lines to Compressor Nuts/Bolts	28	20	–
Refrigerant Lines to Evaporator Nuts	23	17	–

CONTROLS

TABLE OF CONTENTS

page

A/C COMPRESSOR CLUTCH
DESCRIPTION 11
OPERATION 11
DIAGNOSIS AND TESTING
A/C COMPRESSOR CLUTCH COIL 11
STANDARD PROCEDURE
DIODE REPLACEMENT 12
A/C CLUTCH INSPECTION 12
A/C CLUTCH BREAK-IN 13
REMOVAL 13
INSTALLATION 14
A/C CLUTCH RELAY
DESCRIPTION 16
OPERATION 16
REMOVAL 17
INSTALLATION 17
A/C HEATER CONTROL
DESCRIPTION 17
DIAGNOSIS AND TESTING
VACUUM CONTROL SYSTEM 18
STANDARD PROCEDURE
A/C-HEATER CONTROL CALIBRATION 21
REMOVAL 21
INSTALLATION 22
A/C HIGH PRESSURE SWITCH
DESCRIPTION 22
OPERATION 22
DIAGNOSIS AND TESTING
A/C HIGH PRESSURE SWITCH 22
REMOVAL 23
INSTALLATION 23
A/C LOW PRESSURE SWITCH
DESCRIPTION 23
OPERATION 23
DIAGNOSIS AND TESTING
A/C LOW PRESSURE SWITCH 24
REMOVAL 24
INSTALLATION 24

page

A/C PRESSURE TRANSDUCER
DESCRIPTION 25
OPERATION 25
DIAGNOSIS AND TESTING
A/C PRESSURE TRANSDUCER 25
REMOVAL 26
INSTALLATION 26
BLEND DOOR ACTUATOR
DESCRIPTION 26
OPERATION 26
REMOVAL 27
INSTALLATION 27
BLOWER MOTOR RELAY
DESCRIPTION 28
OPERATION 28
REMOVAL 29
INSTALLATION 29
BLOWER MOTOR RESISTOR
DESCRIPTION 29
OPERATION 29
DIAGNOSIS AND TESTING
BLOWER MOTOR RESISTOR 30
REMOVAL 30
INSTALLATION 30
MODE DOOR ACTUATOR
DESCRIPTION 31
REMOVAL 31
INSTALLATION 32
RECIRCULATION DOOR ACTUATOR
DESCRIPTION 32
REMOVAL 33
INSTALLATION 34
VACUUM CHECK VALVE
DESCRIPTION 34
OPERATION 34
REMOVAL 34
INSTALLATION 34

A/C COMPRESSOR CLUTCH

DESCRIPTION

The A/C compressor clutch assembly consists of a stationary electromagnetic A/C clutch field coil, pulley bearing and pulley assembly, clutch plate and shims (Fig. 1). These components provide the means to engage and disengage the A/C compressor from the engine accessory drive belt.

The A/C clutch field coil and the pulley bearing and pulley assembly are both retained on the nose of the A/C compressor with snap rings. The clutch plate is keyed or splined to the compressor shaft and secured with a nut.

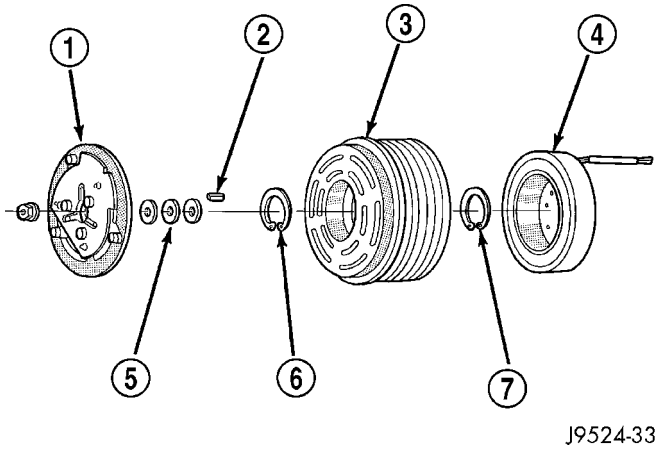

Fig. 1 A/C Compressor Clutch - Typical

1 - CLUTCH PLATE
2 - SHAFT KEY (SOME MODELS)
3 - PULLEY AND BEARING
4 - CLUTCH COIL
5 - CLUTCH SHIMS
6 - SNAP RING
7 - SNAP RING

OPERATION

The A/C compressor clutch components provide the means to engage and disengage the A/C compressor from the engine accessory drive belt. When the electromagnetic A/C clutch field coil is energized, it magnetically draws the clutch plate into contact with the clutch pulley and drives the compressor shaft. When the coil is not energized, the pulley freewheels on the clutch hub bearing, which is part of the pulley.

A/C clutch engagement is controlled by the following:

- A/C-heater mode control
- A/C clutch relay
- A/C pressure transducer (gasoline engines)
- A/C high pressure switch (diesel engine)
- A/C low pressure switch
- Powertrain control module (PCM) or engine control module (ECM) (depending on application)

The A/C compressor clutch components cannot be repaired and, if faulty or damaged, they must be replaced.

DIAGNOSIS AND TESTING

A/C COMPRESSOR CLUTCH COIL

The A/C compressor clutch coil electrical circuit is controlled by the powertrain control module (PCM) or the engine control module (ECM) (depending on engine application) through the A/C clutch relay. Begin testing of a suspected compressor clutch coil problem by performing the preliminary checks.

PRELIMINARY CHECKS

(1) If no diagnostic trouble codes (DTCs) are found in the powertrain control module (PCM) or the engine control module (ECM) (depending on engine application), go to Step 2. If any DTCs are found, repair as required.

(2) If the A/C compressor clutch still will not engage, verify the refrigerant charge level (Refer to 24 - HEATING & AIR CONDITIONING/PLUMBING - DIAGNOSIS AND TESTING - REFRIGERANT SYSTEM LEAKS). If the refrigerant charge level is OK, go to Step 3. If the refrigerant charge level is not OK, adjust the refrigerant charge as required.

(3) On models equipped with the 2.4L or 3.7L gasoline engine, if the A/C compressor clutch still will not engage, disconnect the wire harness connector from the A/C pressure transducer and check for battery current at the connector with the engine running and the A/C-heater control set to the A/C mode. If OK, go to TESTS. If not OK, refer to the Body Diagnostic Procedures to perform further diagnosis. On models equipped with the 2.8L diesel engine, go to TESTS.

TESTS

(1) Verify the battery state of charge (Refer to 8 - ELECTRICAL/BATTERY SYSTEM/BATTERY - DIAGNOSIS AND TESTING).

(2) Connect an ammeter (0 to 10 ampere scale selected) in series with the clutch coil feed terminal. Connect a voltmeter (0 to 20 volt scale selected) to measure voltage across the battery and the clutch coil.

(3) With the A/C-heater control in the A/C mode and the blower motor at low speed, start the engine and allow it to run at a normal idle speed.

(4) The A/C compressor clutch should engage immediately, and the clutch coil supply voltage should be within two volts of the battery voltage. If the coil supply voltage is OK, go to Step 5. If the coil supply voltage is not within two volts of battery voltage, test the clutch coil feed circuit for excessive voltage drop and repair as necessary. If there is no voltage reading at the clutch coil, use a DRB III ® scan tool and refer to appropriate diagnostic information for testing of the compressor clutch circuit and

A/C COMPRESSOR CLUTCH (Continued)

PCM control. The following components must be checked and repaired as required before you can complete testing of the clutch coil:

- Fuses in the junction block (JB) and the power distribution center (PDC)
- A/C heater mode control
- A/C clutch relay
- A/C high pressure switch (diesel engine)
- A/C low pressure switch
- Powertrain control module (PCM) or the engine control module (ECM) (depending on engine application)

(5) For the acceptable A/C clutch coil current draw specifications refer to 24 - HEATING & AIR CONDITIONING - SPECIFICATIONS. Specifications apply for a work area temperature of 21° C (70° F). If voltage is more than 12.5 volts, add electrical loads by turning on electrical accessories until voltage reads below 12.5 volts.

(a) If the A/C clutch coil current reading is zero, the coil is open and must be replaced.

(b) If the A/C clutch coil current reading is above specifications, the coil is shorted and must be replaced.

STANDARD PROCEDURE

DIODE REPLACEMENT

(1) Disconnect and isolate the negative battery cable.

(2) Locate the diode in the A/C clutch wire harness and remove the protective covering.

(3) Remove the diode from the wire harness while paying attention to the current flow direction (Fig. 2).

(4) Remove the insulation from the wires in the harness. Only remove enough insulation to solder in the new diode.

(5) Install the new diode in the harness, making sure current flow is correct. If necessary refer to the appropriate wiring diagram for current flow.

CAUTION: To prevent damage to the diode and wiring, DO NOT use acid core solder.

(6) Solder the connections together using rosin core type solder only.

(7) Tape the diode to the harness using electrical tape making, sure the diode is completely sealed from the elements.

(8) Reconnect the negative battery cable, and test A/C clutch operation.

A/C CLUTCH INSPECTION

NOTE: The A/C clutch can be serviced in the vehicle. The refrigerant system can remain fully-charged during compressor clutch, pulley and bearing assembly, or coil replacement.

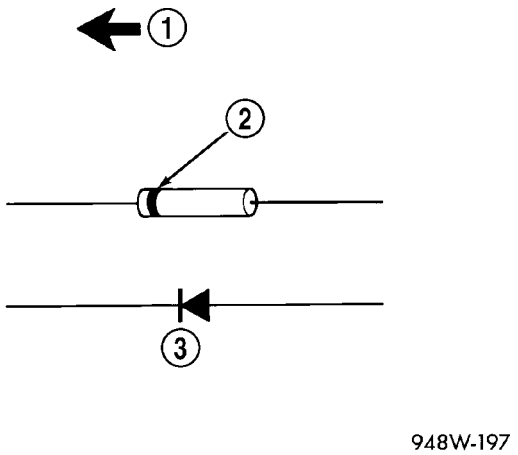

Fig. 2 Diode Identification

1 - CURRENT FLOW
2 - BAND INDICATES CURRENT FLOW
3 - DIODE AS SHOWN IN WIRE DIAGRAMS

Examine the friction surfaces of the clutch pulley and the clutch plate for wear (Fig. 3). The pulley and plate should be replaced if there is excessive wear or scoring.

If the friction surfaces are oily, inspect the shaft and nose area of the A/C compressor for refrigerant oil. If refrigerant oil is found, the compressor shaft seal is leaking and the A/C compressor must be replaced.

Check the clutch pulley bearing for roughness or excessive leakage of grease. Replace the pulley and bearing assembly, if required.

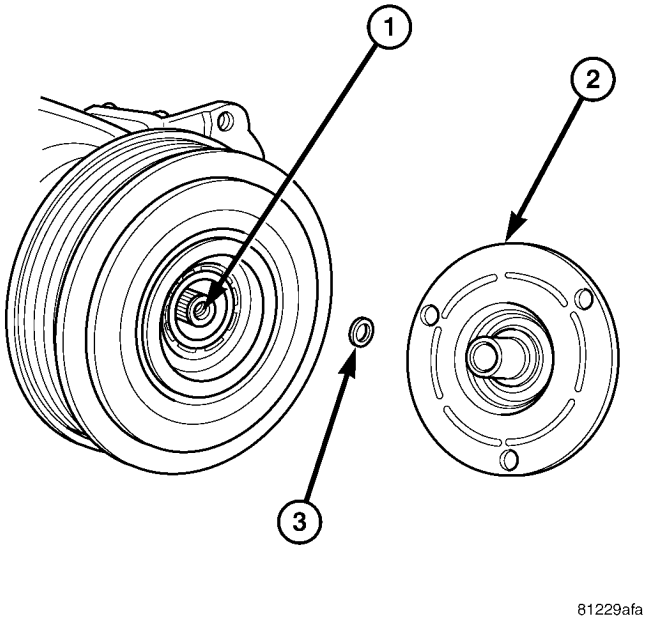

Fig. 3 Clutch Plate and Shim(s)

1 - A/C COMPRESSOR SHAFT
2 - CLUTCH PLATE
3 - SHIM

A/C COMPRESSOR CLUTCH (Continued)

A/C CLUTCH BREAK-IN

After a new A/C compressor clutch has been installed, cycle the compressor clutch approximately twenty times (five seconds on, then five seconds off). During this procedure, set the A/C-heater controls to the A/C Recirculation Mode, the blower motor in the highest speed position, and the engine speed at 1500 to 2000 rpm. This procedure (burnishing) will seat the opposing friction surfaces and provide a higher compressor clutch torque capability.

REMOVAL

NOTE: The compressor clutch, pulley or coil can be serviced in the vehicle. The refrigerant system can remain fully-charged during compressor clutch, pulley or coil service.

(1) Disconnect and isolate negative battery cable.

(2) Remove the accessory drive belt (Refer to 7 - COOLING/ACCESSORY DRIVE/DRIVE BELTS - REMOVAL).

(3) Disconnect the wire harness connector from the compressor clutch field coil connector.

(4) Remove the bolts that secure the A/C compressor to the mounting bracket.

(5) Remove the A/C compressor from the mounting bracket and support the compressor while servicing the clutch.

(6) Insert the pins of the spanner wrench (Special Tool 6462 in Kit 6460) into the holes of the clutch plate. Hold the clutch plate stationary with the spanner wrench and remove the clutch nut or bolt (depending on application) (Fig. 4).

(7) Remove the clutch plate with puller (Special Tool 6461 in Kit 6460).

(8) Remove the clutch shims from the compressor shaft.

(9) Remove the snap ring that secures the pulley and bearing assembly to the compressor with snap ring pliers (Fig. 5).

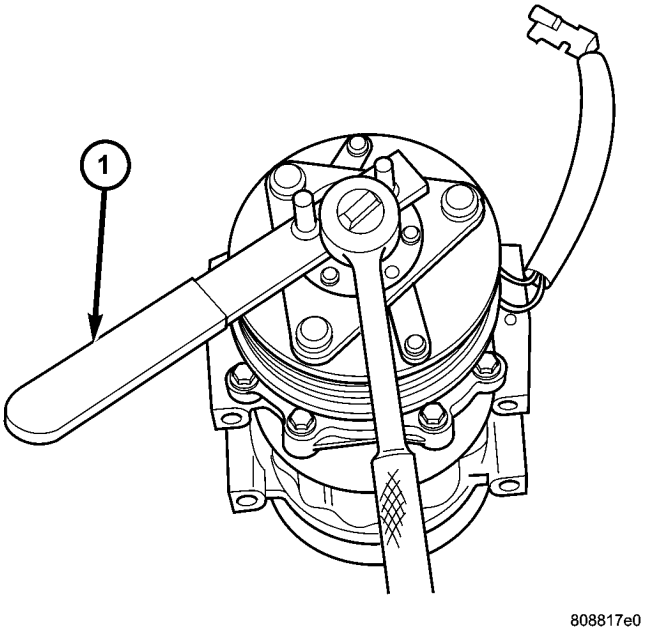

Fig. 4 A/C Clutch - Typical

1 - SPANNER WRENCH

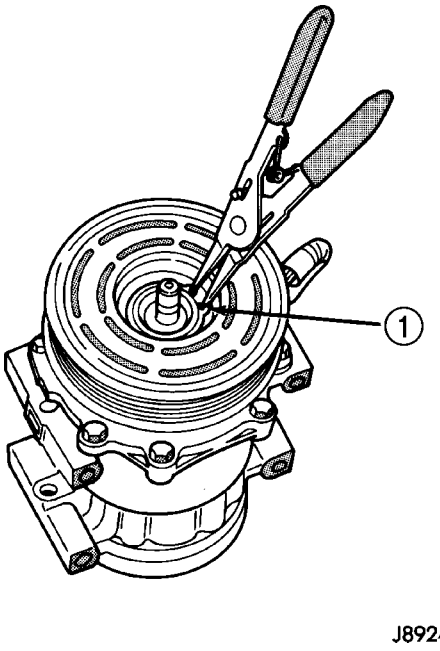

Fig. 5 Front Housing Hub External Snap Ring

1 - SNAP RING

A/C COMPRESSOR CLUTCH (Continued)

(10) Install the lip of the puller jaws (Special Tool 6141-1 in Kit 6125) into the front housing hub external snap ring groove and install the shaft protector (Special Tool 6141-2 in Kit 6125) (Fig. 6).

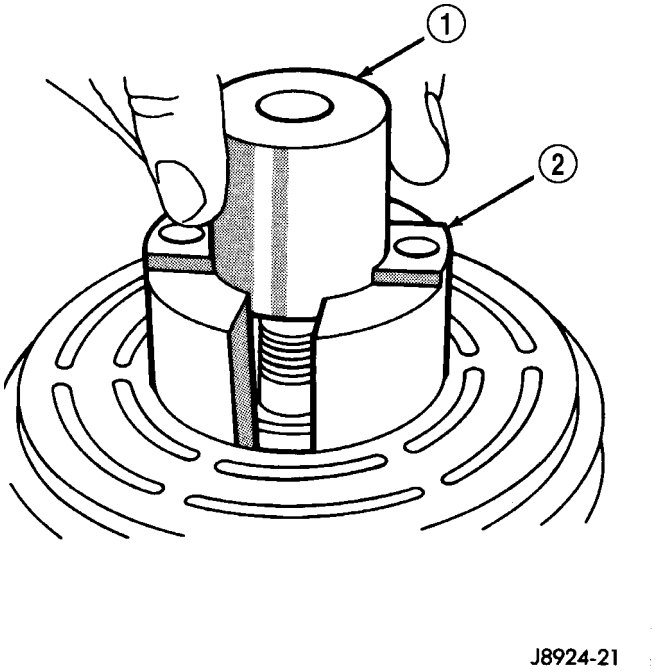

Fig. 6 Shaft Protector and Puller Jaws

1 - SHAFT PROTECTOR
2 - PULLER JAWS

(11) Install the bolts for puller (Special Tool 6461 in Kit 6460) through the puller flange and into the puller jaws (Fig. 7). Tighten the bolts securely.

(12) Turn the puller center-bolt clockwise until the pulley and bearing assembly is completely removed from the front housing hub.

(13) Remove the screw that secures the clutch coil wire harness retainer clip to the compressor front housing (Fig. 8).

(14) Remove the snap ring that secures the A/C clutch field coil to the compressor front housing (Fig. 9).

(15) Remove the clutch field coil from the compressor.

INSTALLATION

(1) Position the A/C clutch field coil onto the A/C compressor front housing.

(2) Install the snap ring that secures the clutch field coil to the compressor front housing with snap ring pliers.

NOTE: Care must be taken not to pinch the wire harness with the retaining clip when tightening the retaining screw.

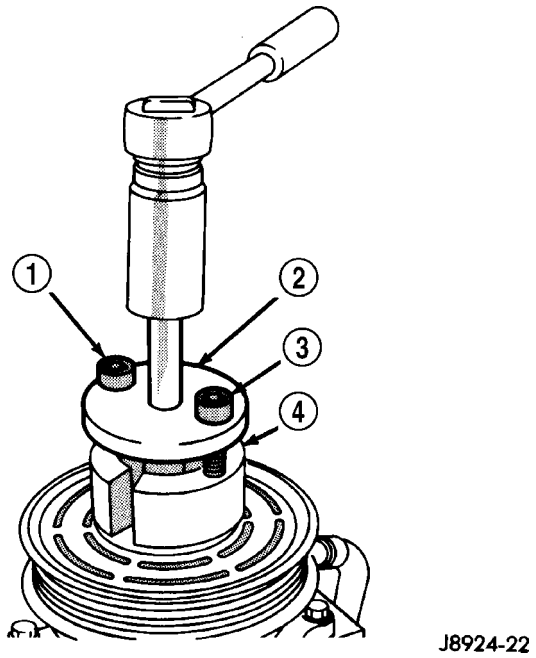

Fig. 7 Puller and Jaws

1 - BOLT
2 - PULLER AND CENTER-BOLT
3 - BOLT
4 - PULLER JAWS

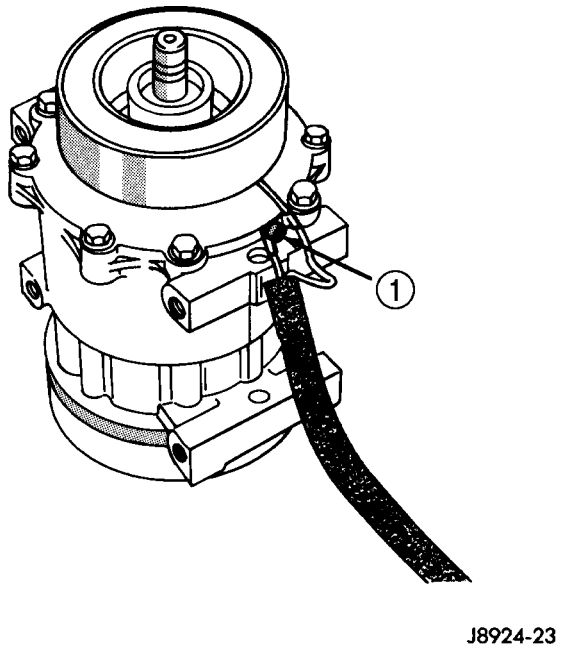

Fig. 8 Clutch Coil Wire Harness

1 - RETAINER CLIP

(3) Install the screw that secures the clutch coil wire harness retainer clip to the compressor front housing. Tighten the screw securely.

(4) Align the pulley and bearing assembly squarely onto the compressor front housing hub.

A/C COMPRESSOR CLUTCH (Continued)

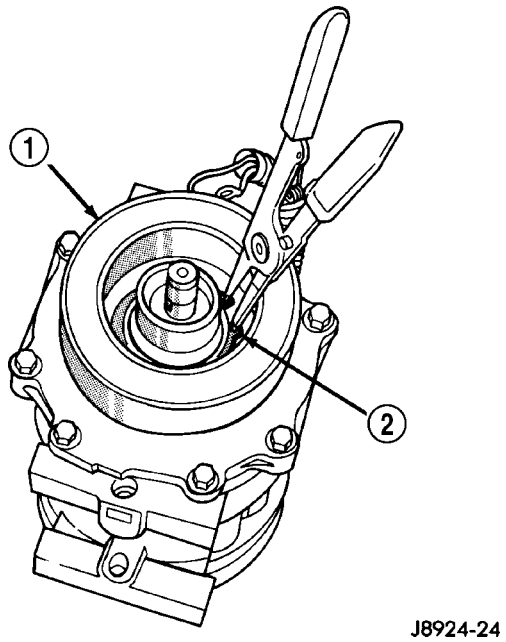

Fig. 9 A/C Clutch Field Coil Snap Ring

1 - FIELD COIL
2 - SNAP RING

(5) Install the pulley and bearing assembly onto the compressor front housing hub with installer (Special Tool 6871) (Fig. 10). Thread the installer onto the compressor shaft, then turn the installer nut until the pulley and bearing assembly is seated against the compressor front housing.

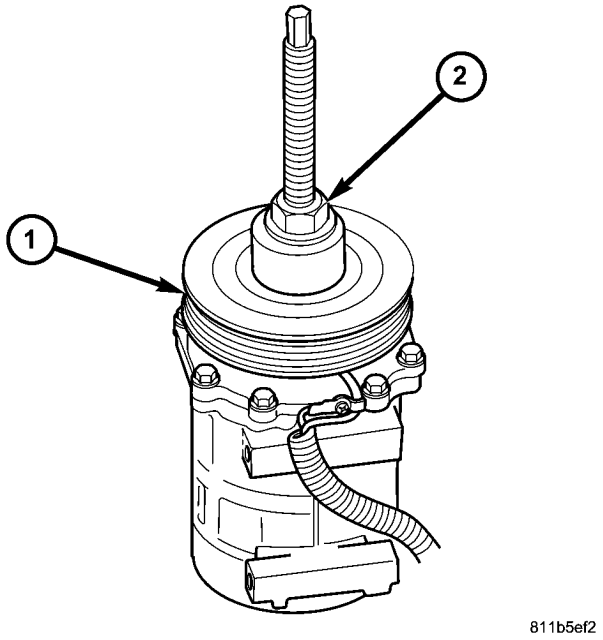

Fig. 10 A/C Clutch Pulley Installer

1 - PULLEY AND BEARING ASSEMBLY
2 - INSTALLER

CAUTION: If the snap ring is not fully seated in the groove it will vibrate out, resulting in a clutch failure and severe damage to the front housing of the compressor.

NOTE: Install the snap ring with the beveled side of the snap ring facing outward.

(6) Install the snap ring that secures the pulley and bearing assembly to the compressor. Press the snap ring to make sure it is properly seated in the groove.

(7) Verify that there is adequate clearance between the clutch field coil wire and the clutch pulley.

NOTE: When installing an original, or a new clutch assembly, try the original shims first. When installing a clutch onto a compressor that previously did not have a clutch, use 1.0, 0.50, and 0.13 millimeter (0.040, 0.020, and 0.005 inch) shims from the clutch hardware package that is provided with the new clutch.

(8) Install the clutch shims onto the compressor shaft.

NOTE: A distinct change of sound during the clutch plate tapping process indicates that the clutch plate has bottomed out against the compressor clutch shims.

(9) Install the clutch plate using driver (Special Tool 6463 in Kit 6460) (Fig. 11). Tap the clutch plate over the compressor shaft until it has bottomed against the clutch shims.

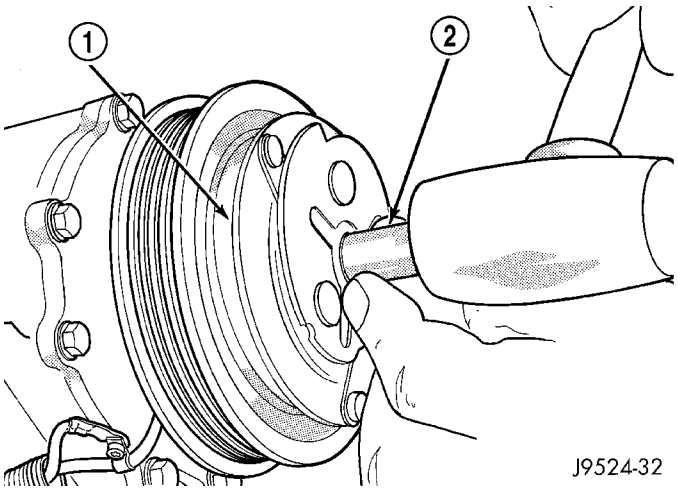

Fig. 11 A/C Clutch Plate and Driver

1 - CLUTCH PLATE
2 - DRIVER

A/C COMPRESSOR CLUTCH (Continued)

(10) Install the clutch nut or bolt (depending on application) onto the compressor shaft. Tighten the nut to 17.5 N·m (155 in. lbs.).

NOTE: If the clutch air gap is not consistent around the circumference of the clutch, lightly pry up at the minimum variations and lightly tap down at the points of maximum variation.

(11) Check the clutch air gap with a feeler gauge (Fig. 12). If the air gap does not meet the specification, add or subtract shims as required (Refer to 24 - HEATING & AIR CONDITIONING - SPECIFICATIONS.)

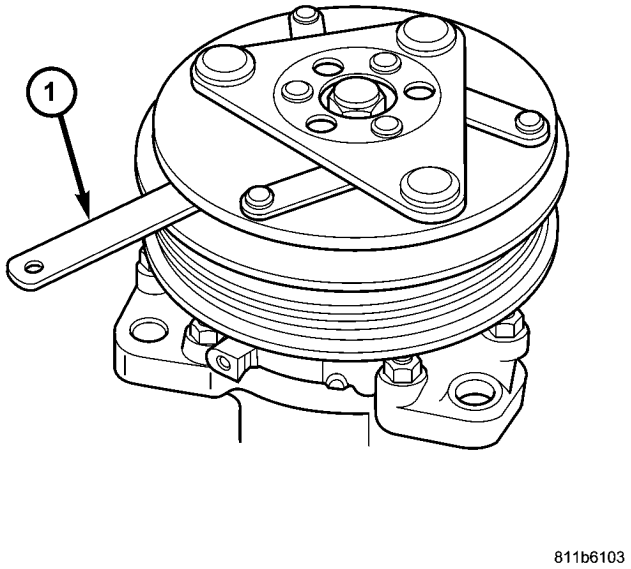

Fig. 12 A/C Clutch Air Gap

1 - FEELER GAUGE

(12) Position the A/C compressor onto the mounting bracket.

(13) On the 2.4L gasoline and 2.5L/2.8L diesel engines, install and tighten the mounting bolts to 27 N·m (20 ft. lbs.).

(14) On the 3.7L gasoline engine install all mounting bolts hand tight, then tighten the mounting bolts in the following sequence:

- The rear bolt to 55 N·m (41 ft. lbs.)
- The front inboard bolt to 40 N·m (30 ft. lbs.)
- The front outboard bolt to 55 N·m (41 ft. lbs.)

(15) Connect the wire harness to the compressor clutch field coil connector.

(16) Install the accessory drive belt (Refer to 7 - COOLING/ACCESSORY DRIVE/DRIVE BELTS - INSTALLATION).

(17) Reconnect the negative battery cable.

(18) Perform the Clutch Break-in Procedure (Refer to 24 - HEATING & AIR CONDITIONING/CONTROLS/A/C COMPRESSOR CLUTCH - STANDARD PROCEDURE).

A/C CLUTCH RELAY

DESCRIPTION

The A/C clutch relay (Fig. 13) is a International Standards Organization (ISO) micro-relay. Relays conforming to the ISO specifications have common physical dimensions, current capacities, terminal functions and patterns. The ISO micro-relay terminal functions are the same as a conventional ISO relay. However, the ISO micro-relay terminal pattern (or footprint) is different, the current capacity is lower, and the physical dimensions are smaller than those of the conventional ISO relay.

The A/C clutch relay is located in the power distribution center (PDC) in the engine compartment.

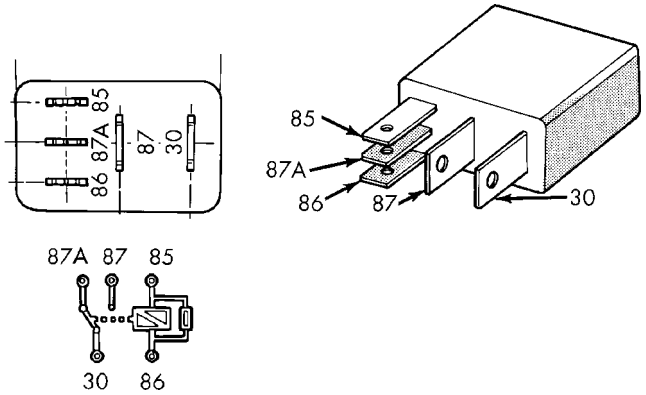

Fig. 13 A/C Clutch Relay

30 - COMMON FEED
85 - COIL GROUND
86 - COIL BATTERY
87 - NORMALLY OPEN
87A - NORMALLY CLOSED

OPERATION

The A/C clutch relay is an electromechanical switch that uses a low current input controlled by the powertrain control module (PCM) or engine contol module (ECM), depending on engine application, to control the high current output to the A/C clutch field coil. The movable, common feed relay contact is held against the fixed, normally closed relay contact by spring pressure. When the electromagnetic relay coil is energized, it draws the movable common feed relay contact away from the fixed, normally closed relay contact and, holds it against the fixed, normally open relay contact. This action allows high current to flow to the A/C clutch field coil.

When the relay coil is de-energized, spring pressure returns the movable relay contact back against

A/C CLUTCH RELAY (Continued)

the fixed, normally closed contact point. The resistor or diode is connected in parallel with the relay coil, and helps to dissipate voltage spikes and electromagnetic interference that can be generated as the electromagnetic field of the relay coil collapses.

The A/C clutch relay terminals are connected to the vehicle electrical system through a receptacle in the power distribution center (PDC). The inputs and outputs of the A/C clutch relay include:

- The common feed terminal (30) receives battery current through a fuse in the PDC at all times.
- The coil ground terminal (85) receives a ground through the A/C compressor clutch relay control circuit only when the PCM or ECM electronically pulls the circuit to ground.
- On gasoline engine applications, the coil battery terminal (86) receives battery current through a fuse in the junction block only when the ignition switch is in the Run or Start position.
- On diesel engine applications, the coil battery terminal (86) receives battery current through a fuse in the PDC at all times.
- The normally open terminal (87) provides battery current to the A/C clutch coil through the A/C clutch relay only when the A/C clutch relay coil is energized.
- The normally closed terminal (87A) is not connected to any circuit in this application, but provides a battery current output only when the A/C clutch relay coil is de-energized.

The A/C clutch relay cannot be repaired and, if faulty or damaged, it must be replaced. Refer to the appropriate wiring information for diagnosis and testing of the ISO-standard micro-relay and for complete HVAC wiring diagrams.

REMOVAL

(1) Disconnect and isolate the negative battery cable.

(2) Open the cover of the power distribution center (PDC) (Fig. 14) located in the engine compartment.

NOTE: Refer to the fuse and relay layout map on the inside of the PDC cover for A/C clutch relay location.

(3) Remove the A/C clutch relay from the PDC.

INSTALLATION

NOTE: Refer to the fuse and relay layout map on the inside of the power distribution center (PDC) cover for A/C clutch relay location.

(1) Position the A/C clutch relay into the receptacle of the PDC.

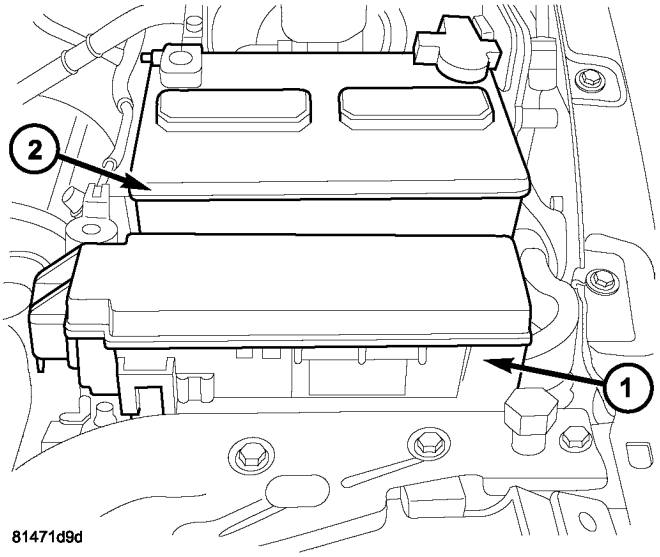

Fig. 14 Power Distribution Center (PDC) - LHD shown, RHD similar

1 - POWER DISTRIBUTION CENTER (PDC)
2 - BATTERY

(2) Align the A/C clutch relay terminals with the terminal cavities in the PDC receptacle and push down firmly on the relay until the terminals are fully seated.

(3) Close the cover of the PDC.

(4) Reconnect the negative battery cable.

A/C HEATER CONTROL

DESCRIPTION

The A/C-heater control (Fig. 15) for both the manual temperature control (MTC) single zone heating-only and the heating-A/C system allows one temperature setting for the entire vehicle. All controls are identified by ISO graphic symbols.

The A/C-heater control and integral computer is located in the instrument panel and contains:

- a push button rear window defogger on/off control. The defogger button contains an LED that illuminates when the rear window defogger system is in operation.
- a rotary control knob for fan speed selection.
- a rotary control knob for recirculation and mode control of the discharged air.
- a rotary control knob for temperature control of the discharged air and turning the heating-A/C system off.

The A/C-heater control cannot be repaired and, if faulty or damaged, it must be replaced. The illumination lamps are available for service replacement.

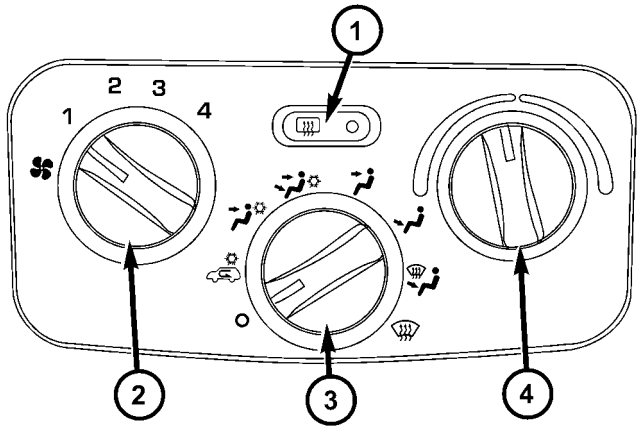

Fig. 15 A/C-Heater Control - Typical

1 - REAR WINDOW DEFOGGER SWITCH
2 - BLOWER SPEED CONTROL
3 - MODE SELECT CONTROL
4 - TEMPERATURE SELECT CONTROL

DIAGNOSIS AND TESTING

VACUUM CONTROL SYSTEM

Vacuum control is used to operate the mode-air doors within the HVAC housing. Testing the operation of the heating-only and heating-A/C system mode control will determine if the vacuum and mechanical controls are functioning. However, it is possible that a vacuum control system that operates correctly at engine idle (high engine vacuum) may not function properly at high engine speeds or loads (low engine vacuum). This can be caused by leaks within the vacuum system, or a faulty vacuum check valve.

A vacuum system test will help to identify the source of poor vacuum system performance or vacuum system leaks. Before starting this test, stop the engine and make certain that the problem is not a disconnected vacuum supply line at the engine intake manifold vacuum tap or at the vacuum reservoir.

Use an adjustable vacuum test set (Special Tool C-3707-B) and a suitable vacuum pump to test the HVAC vacuum control system. With a finger placed over the end of the vacuum test hose probe (Fig. 16), adjust the bleed valve on the test set gauge to obtain a vacuum of exactly 27 kPa (8 in. Hg.). Release and block the end of the probe several times to verify that the vacuum reading returns to the exact 27 kPa (8 in. Hg.) setting. Otherwise, a false reading will be obtained during testing.

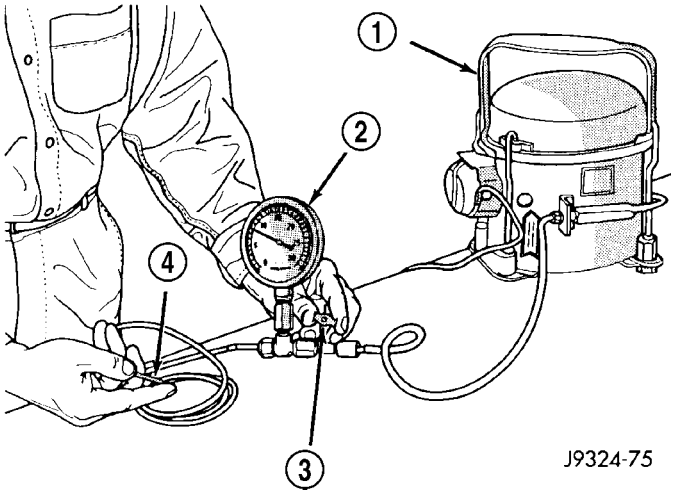

Fig. 16 Adjust Vacuum Test Bleed Valve

1 - VACUUM PUMP TOOL C-4289
2 - VACUUM TEST SET C-3707
3 - BLEED VALVE
4 - PROBE

VACUUM CHECK VALVE

(1) Remove the vacuum check valve. The valve is located in the vacuum supply line (black) at the HVAC system vacuum tee.

(2) Connect the test set vacuum supply hose to the A/C-heater control side of the vacuum check valve. When connected to this side of the check valve, no vacuum should pass and the test set gauge should return to the 27 kPa (8 in. Hg.) setting. If OK, go to Step 3. If not OK, replace the faulty vacuum check valve.

(3) Connect the test set vacuum supply hose to the engine vacuum side of the vacuum check valve. When connected to this side of the check valve, vacuum should flow through the check valve without restriction. If not OK, replace the faulty vacuum check valve.

A/C HEATER CONTROLS

(1) Connect the test set vacuum probe to the HVAC vacuum supply (black) line at the tee in the engine compartment. Position the test set gauge so that it can be viewed from the passenger compartment.

(2) Place the A/C-heater mode control in each mode position, one position at a time, and pause after each selection. The test set gauge should return to the 27 kPa (8 in. Hg.) setting shortly after each selection is made. If not OK, a component or vacuum line in the vacuum circuit of the selected mode has a leak. See the procedure in Locating Vacuum Leaks.

A/C HEATER CONTROL (Continued)

LOCATING VACUUM LEAKS

WARNING: On vehicles equipped with airbags, disable the airbag system before attempting any steering wheel, steering column, or instrument panel component diagnosis or service. Disconnect and isolate the battery negative (ground) cable, then wait two minutes for the airbag system capacitor to discharge before performing further diagnosis or service. This is the only sure way to disable the airbag system. Failure to take the proper precautions could result in an accidental airbag deployment and possible personal injury or death.

CAUTION: Do not use lubricant on the switch ports or in the holes of the connector, as lubricant will ruin the vacuum valve in the switch. A drop of clean water in the connector holes will help the connector slide onto the switch ports.

(1) Disconnect the vacuum harness connector from the back of the A/C-heater control (Refer to 24 - HEATING & AIR CONDITIONING/CONTROLS/A/C HEATER CONTROL - REMOVAL).

(2) Connect the test set vacuum hose probe to each port in the HVAC housing half of the vacuum harness connector, one port at a time, and pause after each connection. The test set gauge should return to the 27 kPa (8 in. Hg.) setting shortly after each connection is made. If OK, replace the faulty A/C-heater control. If not OK, go to Step 3.

(3) Determine the vacuum line color of the vacuum circuit that is leaking. To determine the vacuum line colors, refer to the Vacuum Circuits Chart (Fig. 17).

(4) Disconnect and plug the vacuum line from the component (fitting, actuator, valve, switch, or reservoir) on the other end of the leaking circuit. Instrument panel disassembly or removal may be necessary to gain access to some components. See the appropriate service procedures.

(5) Connect the test set hose or probe to the open end of the leaking circuit. The test set gauge should return to the 27 kPa (8 in. Hg.) setting shortly after each connection is made. If OK, replace the faulty disconnected component. If not OK, go to Step 6.

(6) To locate a leak in a vacuum line, leave one end of the line plugged and connect the test set hose or probe to the other end of the line. Run your fingers slowly along the line while watching the test set gauge. The vacuum reading will fluctuate when your fingers contact the source of the leak. To repair the vacuum line, cut out the leaking section of the line. Then, insert the loose ends of the line into a suitable length of 3 millimeter (0.125 inch) inside diameter rubber hose.

A/C HEATER CONTROL (Continued)

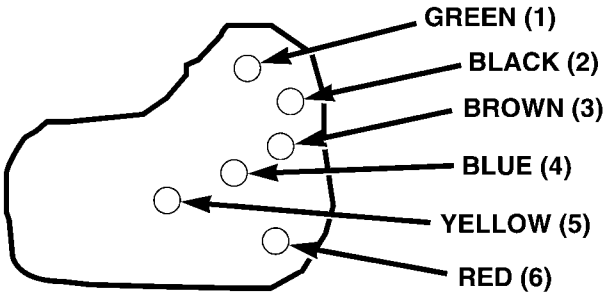

2002 KJ VACUUM LOGIC - HEATER ONLY CONTROL

PORT	1-GREEN	2-BLACK	3-BROWN	4-BLUE	5-YELLOW	6-RED
Actuation	Recirc Door	Source	Panel Door-Full	Floor/Def Floor	Floor/Def Mid-Pos	Panel Door-Mid
Off	Vacuum	Vacuum	Vent	Vent	Vent	Vent
Recirc	Vacuum	Vacuum	Vacuum	Vacuum	Vacuum	Vacuum
Panel	Vent	Vacuum	Vacuum	Vacuum	Vacuum	Vacuum
Bi-Level	Vent	Vacuum	Vent	Vacuum	Vacuum	Vacuum
Floor	Vent	Vacuum	Vent	Vacuum	Vacuum	Vent
Floor/Def	Vent	Vacuum	Vent	Vent	Vacuum	Vent
Defrost	Vent	Vacuum	Vent	Vent	Vent	Vent

2002 KJ VACUUM LOGIC - A/C CONTROL

PORT	1-GREEN	2-BLACK	3-BROWN	4-BLUE	5-YELLOW	6-RED
Actuation	Recirc Door	Source	Panel Door-Full	Floor/Def Floor	Floor/Def Mid-Pos	Panel Door-Mid
Off	Vacuum	Vacuum	Vent	Vent	Vent	Vent
Recirc a/c	Vacuum	Vacuum	Vacuum	Vacuum	Vacuum	Vacuum
Panel a/c	Vent	Vacuum	Vacuum	Vacuum	Vacuum	Vacuum
Bi-Level a/c	Vent	Vacuum	Vent	Vacuum	Vacuum	Vacuum
Bi-Level	Vent	Vacuum	Vent	Vacuum	Vacuum	Vacuum
Panel	Vent	Vacuum	Vacuum	Vacuum	Vacuum	Vacuum
Floor	Vent	Vacuum	Vent	Vacuum	Vacuum	Vent
Floor/Def	Vent	Vacuum	Vent	Vent	Vacuum	Vent
Defrost	Vent	Vacuum	Vent	Vent	Vent	Vent

80cb228a

Fig. 17 Vacuum Circuits Chart

A/C HEATER CONTROL (Continued)

STANDARD PROCEDURE

A/C-HEATER CONTROL CALIBRATION

NOTE: Use this procedure to ensure that the A/C-heater control is correctly calibrated to the blend door actuator. If the calibration is not correct, the heating-A/C system may experience a condition where full heating or cooling capabilities cannot be obtained.

Manual calibration of the A/C-heater control should be performed if the blend door actuator is not functioning properly, or if the temperature of the conditioned air is too warm with the temperature control in the full cold position or too cool with the temperature control in the full hot position.

MANUAL CALIBRATION PROCEDURE

NOTE: This calibration procedure can only be started within the first ten seconds after the ignition switch has been turned from the Off position to the On position. Make sure that the battery is fully charged prior to beginning the calibration procedure.

NOTE: The length of the pause made at each end of the temperature control rotation (sweep) is important. The manual calibration may not occur correctly if the pause is too short (less than 0.5 seconds) or too long (greater than 1.5 seconds).

(1) With the ignition switch in the Off position, move the temperature control to its middle (12 o'clock) position (Fig. 18).

(2) Turn the ignition switch to the On position (do not start the engine).

(3) Within 10 seconds of turning the ignition switch from the Off to the On position, perform the following rotations (sweeps) of the temperature control.

(a) From the 12 o'clock position, rotate the temperature control counter-clockwise to the full cold position. Pause one second.

(b) Rotate the control clockwise to the full hot position. Pause one second.

(c) Rotate the control counter-clockwise to the full cold position. Pause one second.

(d) Rotate the control clockwise to the full hot position. Pause one second.

(e) Rotate the control counter-clockwise to the full cold position.

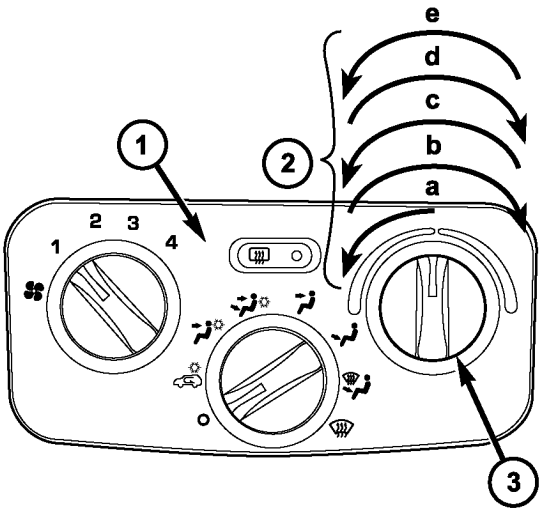

Fig. 18 A/C-HEATER TEMPERATURE CONTROL

1 - A/C-HEATER CONTROL
2 - ROTATIONS OF TEMP CONTROL REQUIRED
3 - TEMPERATURE CONTROL

REMOVAL

WARNING: On vehicles equipped with airbags, disable the airbag system before attempting any steering wheel, steering column, or instrument panel component diagnosis or service. Disconnect and isolate the negative battery (ground) cable, then wait two minutes for the airbag system capacitor to discharge before performing further diagnosis or service. This is the only sure way to disable the airbag system. Failure to take the proper precautions could result in accidental airbag deployment and possible personal injury or death.

(1) Disconnect and isolate the negative battery cable.

(2) Remove the center bezel from the instrument panel (Refer to 23 - BODY/INSTRUMENT PANEL/ INSTRUMENT PANEL CENTER BEZEL - REMOVAL).

(3) Remove the four screws that secure the A/C-heater control to the instrument panel (Fig. 19).

(4) Pull the A/C-heater control away from the instrument panel far enough to access the connections on the back of the control.

(5) Disconnect the vacuum harness and wire harness connectors from the A/C-heater control and remove the control from the vehicle.

A/C HEATER CONTROL (Continued)

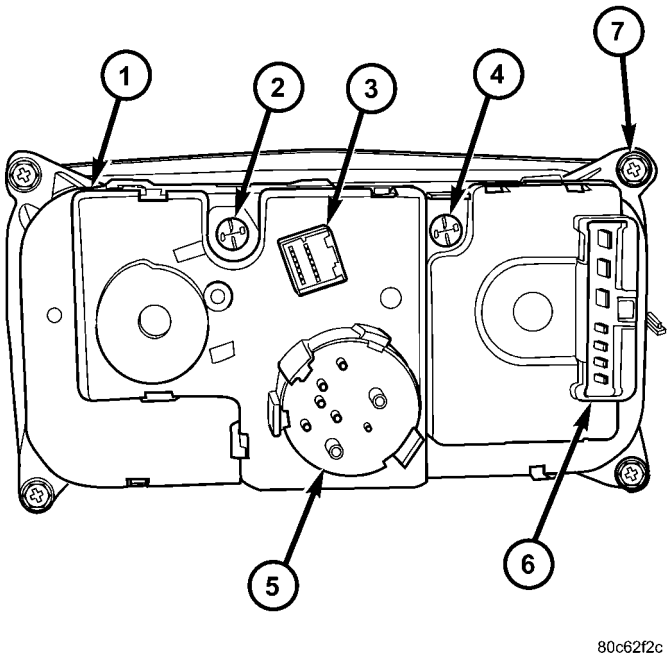

Fig. 19 A/C-Heater Control - Rear View

1 - A/C-HEATER CONTROL
2 - ILLUMINATION LAMP
3 - REAR DEFOGGER/BLEND DOOR CONNECTOR
4 - ILLUMINATION LAMP
5 - VACUUM MODE SELECT CONTROL
6 - BLOWER SPEED CONTROL CONNECTOR
7 - MOUNTING SCREW LOCATIONS (4)

INSTALLATION

(1) Connect the wire harness and vacuum connectors to the back of the A/C-heater control.

(2) Position the A/C-heater control into the instrument panel and install the retaining screws. Tighten the screws to 2 N·m (17 in. lbs.).

(3) Install the instrument panel center bezel (Refer to 23 - BODY/INSTRUMENT PANEL/INSTRUMENT PANEL CENTER BEZEL - INSTALLATION).

(4) Reconnect the negative battery cable.

(5) Perform the A/C-Heater Control Calibration procedure (Refer to 24 - HEATING & AIR CONDITIONING/CONTROLS/A/C HEATER CONTROL - STANDARD PROCEDURE - A/C-HEATER CONTROL CALIBRATION).

A/C HIGH PRESSURE SWITCH

DESCRIPTION

The A/C high pressure switch controls both A/C compressor clutch engagement/disengagement, and electric cooling fan operation when equipped with the 2.8L diesel engine. The A/C high pressure switch is mounted on a fitting located on the A/C discharge line near the A/C compressor. The A/C high pressure switch turns off the A/C compressor if the refrigerant system pressure exceeds 3100 - 3375 kPa (450 - 490 psi).

The fitting for the A/C high pressure switch on the A/C discharge line is equipped with an O-ring seal and contains a Schrader-type valve, which allows the switch to be serviced without discharging the refrigerant system.

OPERATION

The A/C high pressure switch is connected in series electrically with the A/C low pressure switch between ground and the engine control module (ECM). The contacts in the A/C high pressure switch open and close causing the ECM to turn the A/C compressor clutch on and off. This prevents A/C compressor operation when the discharge line pressure approaches high levels, and also reduces electrical surging from A/C clutch engagement.

The A/C high pressure switch controls the electric cooling fan operation by monitoring refrigerant line pressures. When the A/C discharge line pressure rises above 1900 to 2200 kPa (280 to 320 psi) the fan will turn on. The cooling fan will turn off when the A/C discharge line pressure drops to 1600 kPa (235 psi).

The A/C high pressure switch contacts open when the A/C discharge line pressure rises above 3100 to 3375 kPa (450 to 490 psi). The A/C high pressure switch contacts close when the A/C discharge line pressure drops to 1860 to 2275 kPa (270 to 330 psi).

The A/C high pressure switch is factory-calibrated and cannot be adjusted or repaired. If the A/C high pressure switch is faulty or damaged, it must be replaced.

DIAGNOSIS AND TESTING

A/C HIGH PRESSURE SWITCH

Before performing diagnosis of the A/C high pressure switch, verify that the refrigerant system has the correct refrigerant charge (Refer to 24 - HEATING & AIR CONDITIONING/PLUMBING - STANDARD PROCEDURE - REFRIGERANT SYSTEM CHARGE)

For circuit descriptions and diagrams, refer to the appropriate wiring information. The wiring information includes wiring diagrams, proper wire and connector repair procedures, further details on wire harness routing and retention, as well as pin-out and location views for the various wire harness connectors, splices and grounds.

(1) Disconnect and isolate the negative battery cable.

(2) Disconnect the wire harness connector from the A/C high pressure switch.

A/C HIGH PRESSURE SWITCH (Continued)

(3) Check for continuity between both terminals of the A/C high pressure switch. There should be continuity. If there is not continuity, replace the faulty A/C high pressure switch. If there is continuity, test the A/C high pressure switch sense circuit (Refer to 8 - ELECTRICAL/WIRING DIAGRAM INFORMATION - DIAGNOSIS AND TESTING). Repair as required.

REMOVAL

NOTE: It is not necessary to discharge the refrigerant system to replace the A/C high pressure switch.

(1) Disconnect and isolate the negative battery cable.

(2) Disconnect the wire harness connector from the A/C high pressure switch (Fig. 20).

(3) Remove the A/C high pressure switch from the A/C discharge line and remove and discard the O-ring seal.

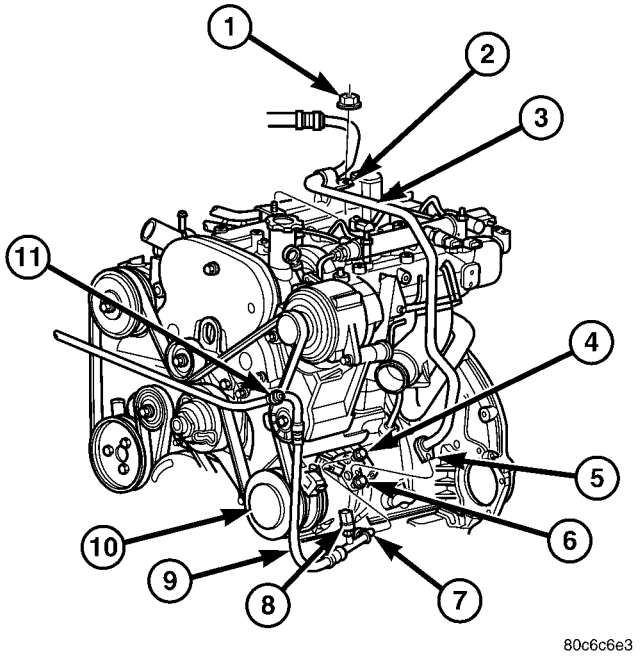

Fig. 20 A/C High Pressure Switch - Typical

1 - NUT
2 - CLIP
3 - A/C SUCTION LINE
4 - SCREW
5 - MOUNTING FLANGE
6 - SCREW
7 - MOUNTING FLANGE
8 - A/C HIGH PRESSURE SWITCH
9 - A/C DISCHARGE LINE
10 - A/C COMPRESSOR
11 - SERVICE PORT

INSTALLATION

NOTE: Use only the specified O-ring as it is made of special material for R-134a. Use only refrigerant oil of the type required for the A/C compressor.

(1) Lubricate a new rubber O-ring seal with clean refrigerant oil and install it on the A/C high pressure switch fitting.

(2) Install the A/C high pressure switch onto the A/C discharge line. Hand-tightened the switch securely.

(3) Connect the wire harness connector to the A/C high pressure switch.

(4) Reconnect the negative battery cable.

A/C LOW PRESSURE SWITCH

DESCRIPTION

The A/C low pressure switch is a single pole, single throw, pressure actuated switch that is used to control evaporator freeze up.

The A/C low pressure switch is mounted on a fitting located on the top of the A/C accumulator. The A/C low pressure switch fitting on the accumulator is equipped with an O-ring and contains a Schrader-type valve, which allows the switch to be serviced without discharging the refrigerant system.

OPERATION

The A/C low pressure switch monitors the pressure of the refrigerant leaving the accumulator to the A/C compressor. When equipped with a diesel engine, the A/C low pressure switch is electrically connected in series with the A/C high pressure switch, between ground and the engine control module (ECM).

The contacts in the A/C low pressure switch open or close the path to ground, signaling the powertrain control module (PCM) or the ECM (depending on engine application) to turn the A/C compressor clutch on and off. This regulates the refrigerant system pressure and controls A/C evaporator temperature. Controlling the evaporator temperature prevents condensate water on the evaporator fins from freezing and obstructing A/C system air flow.

The A/C low pressure switch contacts are open when the A/C suction line pressure is approximately 141 kPa (20.5 psi) or lower. The A/C low pressure switch contacts will close when the A/C suction line pressure rises to approximately 234 to 262 kPa (34 to 38 psi) or above. Lower ambient temperatures, below approximately -1° C (30° F), will also cause the A/C low pressure switch contacts to open. This is due to the pressure/temperature relationship of the refrigerant in the system.

A/C LOW PRESSURE SWITCH (Continued)

The A/C low pressure switch is factory-calibrated and cannot be adjusted or repaired. If the A/C low pressure switch is faulty or damaged, it must be replaced.

DIAGNOSIS AND TESTING

A/C LOW PRESSURE SWITCH

NOTE: Lower ambient temperatures, below about -1° C (30° F), during cold weather will open the A/C low pressure switch contacts and prevent A/C compressor operation due to the pressure/temperature relationship of the refrigerant.

Before performing diagnosis of the A/C low pressure switch, verify that the refrigerant system has the correct refrigerant charge (Refer to 24 - HEATING & AIR CONDITIONING/PLUMBING - STANDARD PROCEDURE - REFRIGERANT SYSTEM CHARGE) and that the A/C low pressure switch is properly installed on the accumulator fitting. If the A/C low pressure switch is not properly installed, it may not open the Schrader-type valve in the accumulator fitting, which will prevent the switch from correctly monitoring the refrigerant system pressure.

For circuit descriptions and diagrams, refer to the appropriate wiring information. The wiring information includes wiring diagrams, proper wire and connector repair procedures, further details on wire harness routing and retention, as well as pin-out and location views for the various wire harness connectors, splices and grounds.

(1) With gear selector in Park or Neutral and with park brake set, start the engine and allow it to idle.

(2) Place the A/C-heater mode control in any A/C position.

(3) Disconnect the wire harness connector from the A/C low pressure switch.

(4) Using a suitable jumper wire, install the jumper wire between the two terminals of the wire harness connector for the A/C low pressure switch. The A/C compressor clutch should engage. If the A/C clutch does engage, replace the faulty A/C low pressure switch. If the A/C clutch does not engage, the A/C clutch, A/C clutch relay, A/C-heater control, A/C high pressure switch (diesel engine application), A/C pressure transducer (gasoline engine application), PCM or ECM (depending on engine application), fuses or related wiring circuits may be defective (Refer to 8 - ELECTRICAL/WIRING DIAGRAM INFORMATION - DIAGNOSIS AND TESTING). Repair as required.

REMOVAL

NOTE: Note: It is not necessary to discharge the refrigerant system to replace the A/C low pressure switch.

(1) Disconnect and isolate the negative battery cable.

(2) Disconnect the wire harness connector from the A/C low pressure switch (Fig. 21).

(3) Remove the A/C low pressure switch from the fitting on the top of the accumulator and remove and discard the O-ring seal.

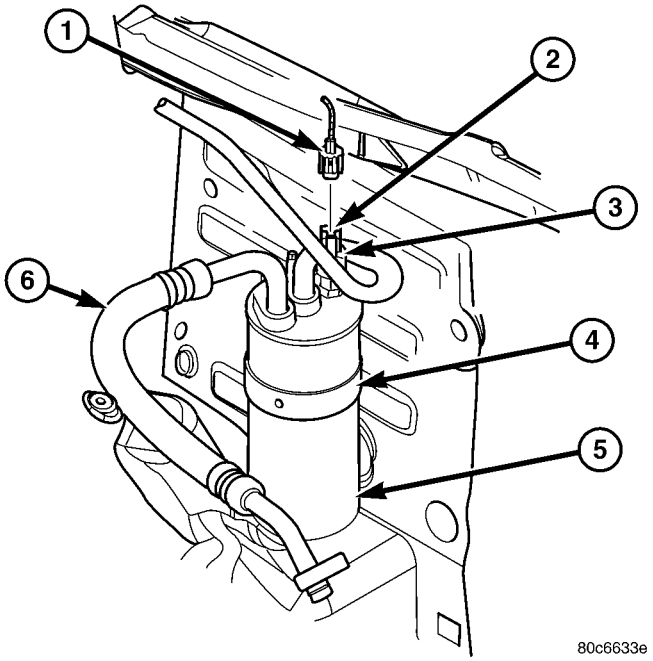

Fig. 21 A/C Low Pressure Switch - Typical

1 - WIRING HARNESS CONNECTOR
2 - A/C LOW PRESSURE SWITCH
3 - EVAPORATOR TAPPING BLOCK
4 - MOUNTING BRACKET
5 - ACCUMULATOR
6 - SUCTION LINE

INSTALLATION

NOTE: Use only the specified O-ring as it is made of special material for R-134a. Use only refrigerant oil of the type required for the A/C compressor.

(1) Lubricate a new rubber O-ring seal with clean refrigerant oil and install it on the A/C low pressure switch fitting.

(2) Install the A/C low pressure switch on the accumulator. Hand-tightened the switch securely.

(3) Connect the wire harness connector to the A/C low pressure switch.

(4) Reconnect the negative battery cable.

A/C PRESSURE TRANSDUCER

DESCRIPTION

The A/C pressure transducer (Fig. 22) is a switch that is installed on a fitting located on the A/C discharge line when equipped with the 2.4L or 3.7L gasoline engine. An internally threaded fitting on the A/C pressure transducer connect it to the externally threaded Schrader-type fitting on the A/C discharge line. A rubber O-ring seals the connection between the A/C pressure transducer and the discharge line fitting. The A/C pressure transducer is connected to the vehicle electrical system by a molded plastic connector with three terminals.

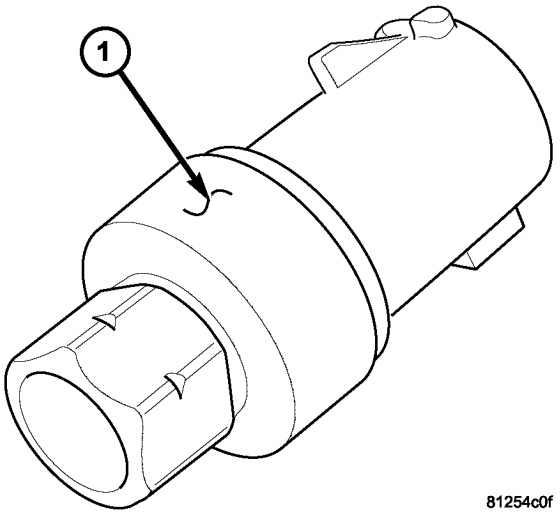

Fig. 22 A/C Pressure Transducer

1 - A/C PRESSURE TRANSDUCER

OPERATION

The A/C pressure transducer monitors the pressures in the high side of the refrigerant system through its connection to a fitting on the A/C discharge line. The A/C pressure transducer will change its internal resistance in response to the pressures it monitors. A Schrader-type valve in the discharge line fitting permits the A/C pressure transducer to be removed or installed without disturbing the refrigerant in the A/C system.

The powertrain control module (PCM) provides a five volt reference signal and a sensor ground to the A/C pressure transducer, then monitors the output voltage of the A/C pressure transducer on a sensor return circuit to determine refrigerant pressure. The PCM is programmed to respond to the A/C pressure transducer and other sensor inputs by controlling the operation of the A/C compressor clutch and the radiator cooling fan to help optimize A/C system performance and to protect the system components from damage PCM will disengage the A/C compressor clutch when high side pressure rises above 2971 kPa (431 psi) or fall below 206 kPa (30 psi). The A/C pressure transducer input to the PCM will also prevent the A/C compressor clutch from engaging when ambient temperatures are below about 1.0° C (50° F) due to the pressure/temperature relationship of the refrigerant.

The A/C pressure transducer is diagnosed using a DRBIII® scan tool. Refer to the appropriate diagnostic information.

The A/C pressure transducer cannot be adjusted or repaired and, if faulty or damaged, it must be replaced.

DIAGNOSIS AND TESTING

A/C PRESSURE TRANSDUCER

The A/C pressure transducer is tested using a DRBIII® scan tool. Refer to the appropriate diagnostic information. Before testing the A/C pressure transducer, be certain that the transducer wire harness connection is clean of corrosion and properly connected. For the A/C to operate, an A/C pressure transducer voltage reading between 0.451 and 4.519 volts is required. Voltages outside this range indicate a low or high refrigerant system pressure condition to the powertrain control module (PCM). The PCM is programmed to respond to a low or high refrigerant system pressure by suppressing operation of the A/C compressor. Refer to the A/C Pressure Transducer Voltage chart for the possible conditions indicated by the transducer voltage reading.

A/C PRESSURE TRANSDUCER VOLTAGE

Voltage	Possible Indication
0.0	1. No sensor supply voltage from PCM. 2. Shorted sensor circuit. 3. Faulty transducer.
0.150 TO 0.450	1. Ambient temperature below 10° C (50° F). 2. Low refrigerant system pressure.
0.451 TO 4.519	1. Normal refrigerant system pressure.
4.520 TO 4.850	1. High refrigerant system pressure.
5.0	1. Open sensor circuit. 2. Faulty transducer.

A/C PRESSURE TRANSDUCER (Continued)

REMOVAL

NOTE: Note: It is not necessary to discharge the refrigerant system to replace the A/C pressure transducer.

(1) Disconnect and isolate the negative battery cable.

(2) Disconnect the wire harness connector from the A/C pressure transducer.

(3) Remove the A/C pressure transducer from the fitting on the discharge line and remove and discard the O-ring seal. (Fig. 23).

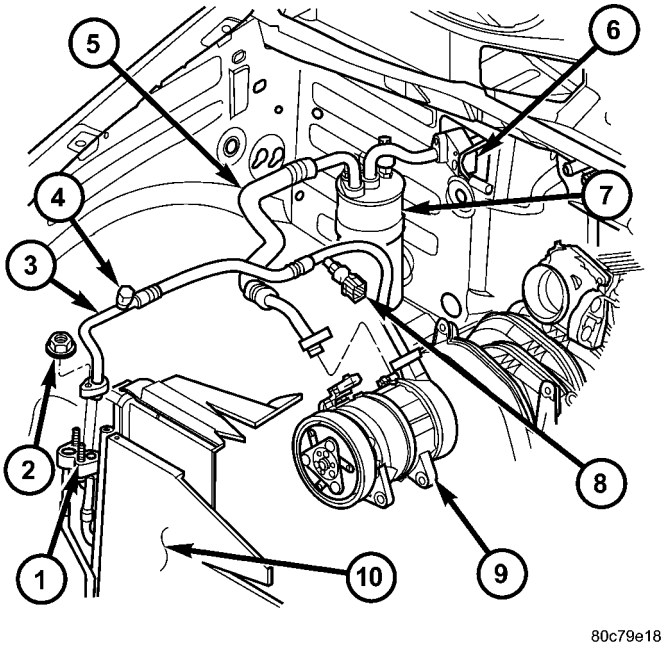

Fig. 23 A/C Pressure Transducer - 2.4L/3.7L Engines

1 - A/C CONDENSER INLET PORT
2 - NUT
3 - A/C DISCHARGE LINE
4 - SERVICE PORT
5 - SUCTION LINE
6 - EVAPORATOR TAPPING BLOCK
7 - A/C ACCUMULATOR
8 - A/C PRESSURE TRANSDUCER
9 - A/C COMPRESSOR
10 - A/C CONDENSER

INSTALLATION

NOTE: Use only the specified O-ring as it is made of special material for R-134a. Use only refrigerant oil of the type required for the A/C compressor.

(1) Lubricate a new rubber O-ring seal with clean refrigerant oil and install it on the A/C pressure transducer fitting.

(2) Install the A/C pressure transducer onto the A/C discharge line. Hand-tighten the transducer securely.

(3) Connect the wire harness connector to the A/C pressure transducer.

(4) Reconnect the negative battery cable.

BLEND DOOR ACTUATOR

DESCRIPTION

The blend door actuator is a reversible, 12-volt direct current (DC), servo motor which mechanically positions the blend-air door (Fig. 24). The blend door actuator is located on the top of the HVAC housing.

The blend door actuator is contained within a black molded plastic housing with an integral wire connector receptacle and three integral mounting tabs that allow the actuator to be secured with three screws to the HVAC housing. The blend door actuator also has an output shaft with splines that connects it to the linkage that drives the blend-air door. The blend door actuator requires mechanical indexing to the blend door linkage.

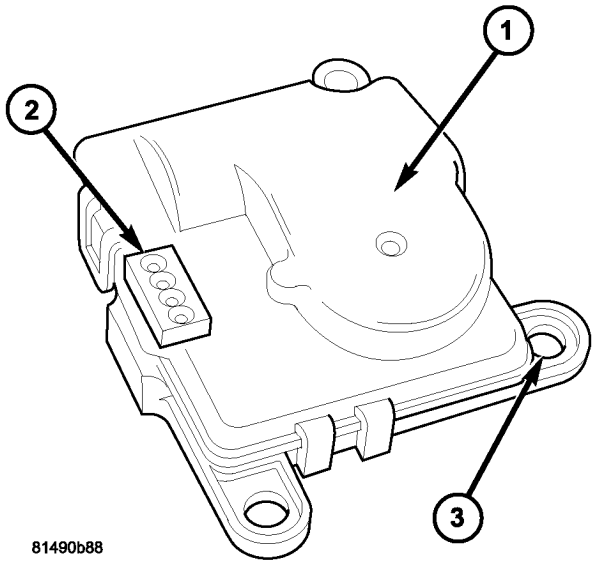

Fig. 24 Blend Door Actuator

1 - BLEND DOOR ACTUATOR
2 - WIRE CONNECTOR RECEPTACLE
3 - MOUNTING TABS (3)

OPERATION

The blend door actuator is connected to the A/C-heater control through the vehicle electrical system by a dedicated three-wire lead and connector of the instrument panel wire harness. The blend door actuator can move the blend-air door in two directions. A potentiometer within the actuator allows the

BLEND DOOR ACTUATOR (Continued)

A/C-heater control to know the exact position of the blend-air door at all times.

The blend door actuator can be diagnosed using a DRBIII® scan tool. Refer to Body Diagnostic Procedures for more information.

The blend door actuator cannot be adjusted or repaired and, if faulty or damaged, it must be replaced.

REMOVAL

WARNING: On vehicles equipped with airbags, disable the airbag system before attempting any steering wheel, steering column, or instrument panel component diagnosis or service. Disconnect and isolate the negative battery (ground) cable, then wait two minutes for the airbag system capacitor to discharge before performing further diagnosis or service. This is the only sure way to disable the airbag system. Failure to take the proper precautions could result in accidental airbag deployment and possible personal injury or death.

NOTE: Prior to performing this procedure, turn the ignition key to the On position and set the A/C-heater control in the mid-temperature position and wait 10 seconds.

(1) Remove the instrument panel from the vehicle (Refer to 23 - BODY/INSTRUMENT PANEL - REMOVAL).

(2) Remove the three screws that secure the blend door actuator to the top of the HVAC housing (Fig. 25).

NOTE: Note the actuator shaft position for installation reference.

(3) Remove the blend door actuator from the HVAC housing.

INSTALLATION

(1) Position the blend door actuator onto the top of the HVAC housing, making sure the actuator spline is positioned properly with the door spline.

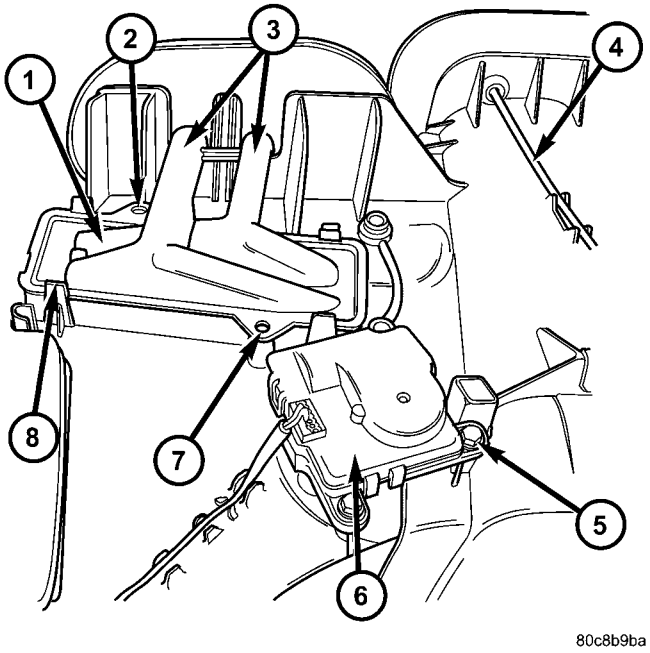

Fig. 25 Blend Door Actuator -LHD shown, RHD smiliar

1 - HEATER CORE
2 - SCREW
3 - INLET AND OUTLET TUBES
4 - VACUUM HARNESS
5 - SCREW (3)
6 - BLEND DOOR ACTUATOR
7 - SCREW
8 - HEATER CORE RETAINER TAB (4)

(2) Install the three screws that secure the blend door actuator to the HVAC housing. Tighten the screws to 2 N·m (17 in. lbs.).

(3) Install the instrument panel (Refer to 23 - BODY/INSTRUMENT PANEL - INSTALLATION).

(4) Perform the A/C-Heater Control Calibration procedure (Refer to 24 - HEATING & AIR CONDITIONING/CONTROLS/A/C HEATER CONTROL - STANDARD PROCEDURE - A/C-HEATER CONTROL CALIBRATION).

BLOWER MOTOR RELAY

DESCRIPTION

The blower motor relay (Fig. 26) for the heating-A/C system is a International Standards Organization (ISO)-type relay. Relays conforming to the ISO specifications have common physical dimensions, current capacities, terminal functions and patterns. The blower motor relay is a electromechanical device that switches battery current from a fuse in the power distribution center (PDC) directly to the blower motor. The blower motor relay is energized when the relay coil is provided a voltage signal by the ignition switch.

The blower motor relay is located in the PDC in the engine compartment.

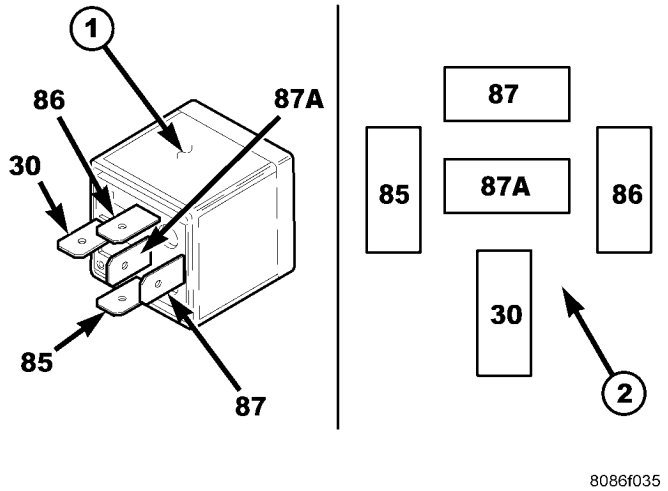

Fig. 26 Blower Motor Relay

30 - COMMON FEED
85 - COIL GROUND
86 - COIL BATTERY
87 - NORMALLY OPEN
87A - NORMALLY CLOSED

OPERATION

The ISO-standard blower motor relay is an electromechanical switch that uses a low current input from the ignition switch to control the high current output to the blower motor. The movable, common feed relay contact is held against the fixed, normally closed relay contact by spring pressure. When the electromagnetic relay coil is energized, it draws the movable common feed relay contact away from the fixed, normally closed relay contact and, holds it against the fixed, normally open relay contact. This action allows high current to flow to the blower motor.

When the relay coil is de-energized, spring pressure returns the movable relay contact back against the fixed, normally closed contact point. The resistor or diode is connected in parallel with the relay coil, and helps to dissipate voltage spikes and electromagnetic interference that can be generated as the electromagnetic field of the relay coil collapses.

The blower motor relay terminals are connected to the vehicle electrical system through a receptacle in the power distribution center (PDC). The inputs and outputs of the blower motor relay include:

- The common feed terminal (30) receives a battery current input from a fuse in the PDC through a fused B(+) circuit at all times.
- The coil ground terminal (85) is connected to a ground at all times.
- The coil battery terminal (86) receives a battery current input from a fuse in the junction block (JB) through a fused ignition switch output (run) circuit only when the ignition switch is in the On position.
- The normally open terminal (87) provides a battery current output to the blower motor through the blower motor relay output circuit only when the blower motor relay coil is energized.
- The normally closed terminal (87A) is not connected to any circuit in this application, but provides a battery current output only when the blower motor relay coil is de-energized.

The blower motor relay cannot be repaired and, if faulty or damaged, it must be replaced. Refer to the appropriate wiring information for diagnosis and testing of the ISO-standard relay and for complete HVAC wiring diagrams.

BLOWER MOTOR RELAY (Continued)

REMOVAL

(1) Disconnect and isolate the negative battery cable.

(2) Open the cover of the power distribution center (PDC) located in the engine compartment (Fig. 27).

NOTE: Refer to the fuse and relay layout map on the PDC cover for blower motor relay location.

(3) Remove the blower motor relay from the PDC.

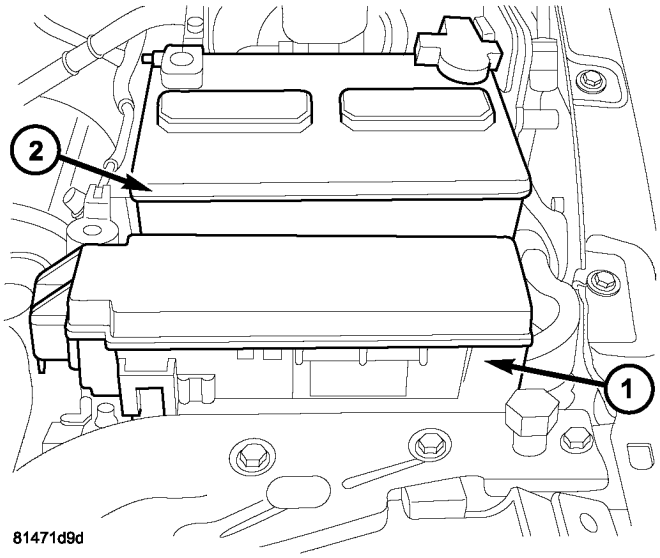

Fig. 27 Power Distribution Center (PDC) - LHD shown, RHD similar

1 - POWER DISTRIBUTION CENTER (PDC)
2 - BATTERY

INSTALLATION

NOTE: Refer to the fuse and relay map on the cover of the power distribution center (PDC) for blower motor relay location.

(1) Position the blower motor relay into the proper receptacle of the PDC.

(2) Align the blower motor relay terminals with the terminal cavities in the PDC receptacle and push down firmly on the relay until the terminals are fully seated.

(3) Close the cover of the PDC.

(4) Reconnect the negative battery cable.

BLOWER MOTOR RESISTOR

DESCRIPTION

The blower motor resistor (Fig. 28) is mounted to the rear of the HVAC housing, directly behind the glove box. The blower motor resistor consists of a molded plastic mounting plate with an integral wire connector receptacle. Concealed behind the mounting plate is the resistor circuit board.

The blower motor resistor is accessed for service by opening the glove box.

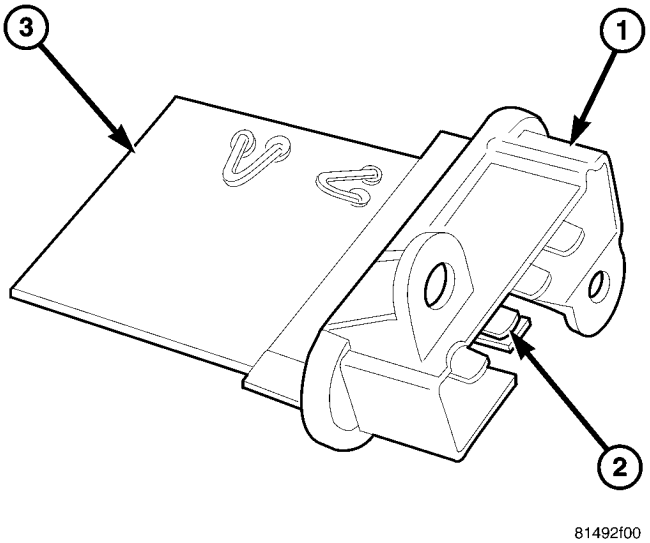

Fig. 28 Blower Motor Resistor

1 - MOUNTING PLATE
2 - WIRE HARNESS CONNECTOR
3 - HEAT SINK

OPERATION

The blower motor resistor is connected to the vehicle electrical system through a dedicated wire lead and connector of the HVAC wire harness. The blower motor resistor has multiple resistor circuits, each of which will reduce the current flow through the blower motor to change the blower motor speed.

The blower motor control in the MTC heating-A/C system directs the ground path for the blower motor through the correct resistor circuit to obtain the selected speed. With the blower motor control in the lowest speed position, the ground path for the blower motor is applied through all of the resistor circuits. Each higher speed selected with the blower motor control applies the blower motor ground path through fewer of the resistor circuits, increasing the blower motor speed. When the blower motor control is in the highest speed position, the blower motor resistor is bypassed and the blower motor receives a direct path to ground.

The blower motor resistor cannot be adjusted or repaired and, if faulty or damaged, it must be replaced.

BLOWER MOTOR RESISTOR (Continued)

DIAGNOSIS AND TESTING

BLOWER MOTOR RESISTOR

WARNING: On vehicles equipped with airbags, disable the airbag system before attempting any steering wheel, steering column, or instrument panel component diagnosis or service. Disconnect and isolate the negative battery (ground) cable, then wait two minutes for the airbag system capacitor to discharge before performing further diagnosis or service. This is the only sure way to disable the airbag system. Failure to take the proper precautions could result in accidental airbag deployment and possible personal injury or death.

NOTE: For circuit descriptions and diagrams, refer to the appropriate wiring information. The wiring information includes wiring diagrams, proper wire and connector repair procedures, further details on wire harness routing and retention, as well as pinout and location views for the various wire harness connectors, splices and grounds.

(1) Disconnect and isolate the negative battery cable.

(2) Disconnect the wire harness connector from the blower motor resistor (Refer to 24 - HEATING & AIR CONDITIONING/CONTROLS/BLOWER MOTOR RESISTOR - REMOVAL).

(3) Using an ohmmeter, check for continuity between all of the blower motor resistor terminals. In each case there should be continuity. If OK, repair the wire harness circuits between the blower motor switch and the blower motor resistor or blower motor as required. If not OK, replace the faulty blower motor resistor.

REMOVAL

WARNING: On vehicles equipped with airbags, disable the airbag system before attempting any steering wheel, steering column, or instrument panel component diagnosis or service. Disconnect and isolate the negative battery (ground) cable, then wait two minutes for the airbag system capacitor to discharge before performing further diagnosis or service. This is the only sure way to disable the airbag system. Failure to take the proper precautions could result in accidental airbag deployment and possible personal injury or death.

WARNING: The blower motor resistor may get very hot during normal operation. If the blower motor was turned on prior to servicing the blower motor resistor, wait five minutes to allow the blower motor resistors to cool before performing diagnosis or service. Failure to take this precaution can result in possible personal injury.

(1) Disconnect and isolate the negative battery cable.

(2) Open the glove box door to gain access to the blower motor resistor (Fig. 29).

(3) Pull out the lock on the blower motor resistor wire harness connector to unlock the connector latch.

(4) Depress the latch on the blower motor resistor wire harness connector and disconnect the wire harness from the resistor.

(5) Remove the two screws that secure the blower motor resistor to the HVAC housing and remove the resistor.

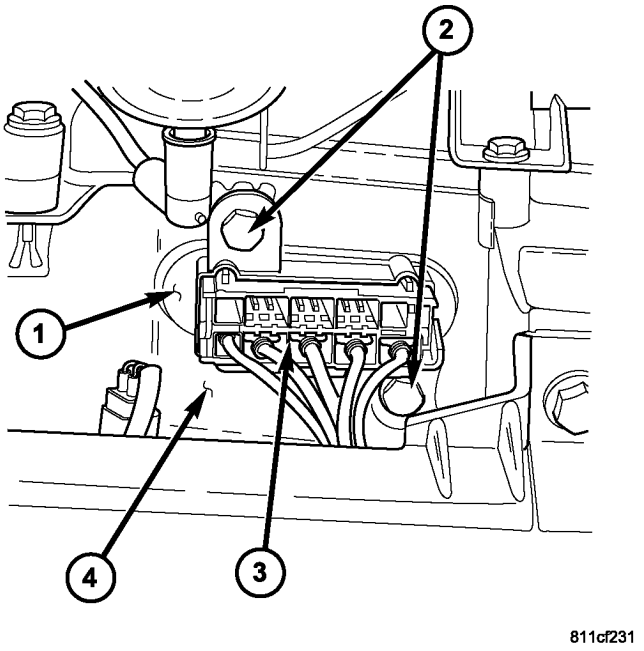

Fig. 29 Blower Motor Resistor

1 - BLOWER MOTOR RESISTOR
2 - SCREW (2)
3 - WIRE HARNESS CONNECTOR
4 - HVAC HOUSING

INSTALLATION

(1) Position the blower motor resistor into the HVAC housing.

(2) Install the two screws that secure the blower motor resistor to the HVAC housing. Tighten the screws to 2 N·m (17 in. lbs.).

(3) Connect the wire harness connector to the blower motor resistor.

(4) Push in the lock on the blower motor resistor wire harness connector.

(5) Close the glove box door.

(6) Reconnect the negative battery cable.

MODE DOOR ACTUATOR

DESCRIPTION

Both the heating-only system and the heating-A/C system use vacuum operated mode door actuators to control the movement of the mode-air doors within the HVAC housing (Fig. 30).

When vacuum is supplied by the A/C-heater control to one side of the defrost/floor actuator or the panel door actuator, the actuator rod is pulled into the actuator, which moves the mode door lever and mode-air door in one direction. When vacuum is supplied by the A/C-heater control to the other side of the actuator, the rod moves the mode-air door in the other direction.

The mode door actuators cannot be adjusted or repaired and, if faulty or damaged, they must be replaced.

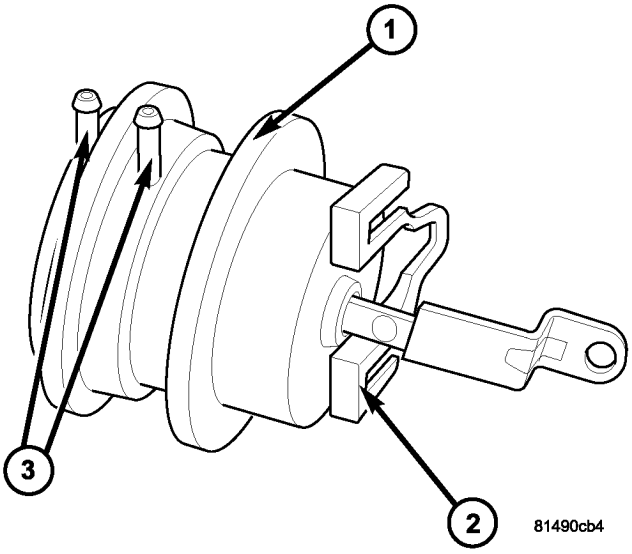

Fig. 30 Vacuum Operated Mode Door Actuator

1 - MODE DOOR ACTUATOR
2 - MOUNTING PROVISION
3 - VACUUM LINE CONNECTORS

REMOVAL

WARNING: On vehicles equipped with airbags, disable the airbag system before attempting any steering wheel, steering column, or instrument panel component diagnosis or service. Disconnect and isolate the battery negative (ground) cable, then wait two minutes for the airbag system capacitor to discharge before performing further diagnosis or service. This is the only sure way to disable the airbag system. Failure to take the proper precautions could result in an accidental airbag deployment and possible personal injury or death.

(1) Disconnect and isolate the negative battery cable.

(2) Remove the instrument panel from the vehicle (Refer to 23 - BODY/INSTRUMENT PANEL - REMOVAL).

(3) Disconnect the vacuum harness connectors from the floor/defrost door actuator or the panel door actuator as required (Fig. 31).

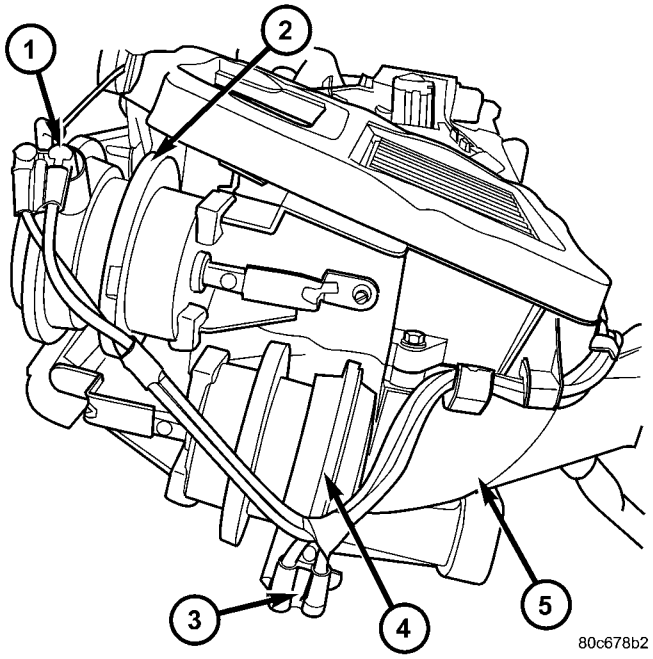

Fig. 31 Mode Door Actuators

1 - VACUUM LINE AND CONNECTORS
2 - PANEL DOOR ACTUATOR
3 - VACUUM LINE AND CONNECTORS
4 - FLOOR/DEFROST DOOR ACTUATOR
5 - HVAC HOUSING

MODE DOOR ACTUATOR (Continued)

(4) Insert a trim stick C-4755 or equivalent into the latch hole on the HVAC housing actuator mount. Gently pry the actuator latch away from the HVAC housing mount while pulling firmly outward on the actuator to disconnect the actuator from the HVAC housing (Fig. 32).

(5) Rotate and tilt the actuator as required to disengage the hole on the end of the actuator link from the hooked pin on the end of the mode door lever and remove the actuator.

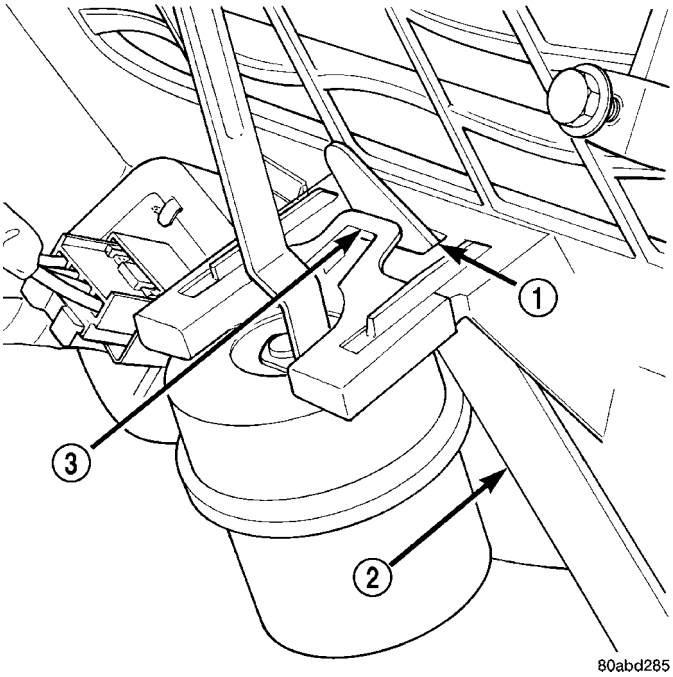

Fig. 32 Mode Door Actuator Latch - Typical

1 - ACTUATOR MOUNT LATCH HOLE
2 - TRIM STICK
3 - ACTUATOR LATCH

INSTALLATION

(1) Install the floor/defrost door actuator or panel door actuator as required by engaging the hole on the end of the actuator link with the hooked pin on the end of the door lever.

(2) Install the actuator to the HVAC housing actuator mount.

(3) Connect the vacuum harness connector to the actuator.

(4) Install the instrument panel (Refer to 23 - BODY/INSTRUMENT PANEL/INSTRUMENT PANEL ASSEMBLY - INSTALLATION).

(5) Reconnect the negative battery cable.

RECIRCULATION DOOR ACTUATOR

DESCRIPTION

A recirculation-air door and vacuum actuator are used only on models equipped with A/C. The heating-A/C system use a vacuum operated recirculation door actuator to control the movement of the recirculation-air door within the HVAC air inlet housing (Fig. 33).

When vacuum is supplied by the A/C-heater control to the recirculation door actuator, the recirculation door moves to the RECIRC position. The recirculation door actuator is spring loaded so that the door moves to the fresh-air position when there is no vacuum supplied.

The recirculation door actuator cannot be adjusted or repaired and, if faulty or damaged, it must be replaced.

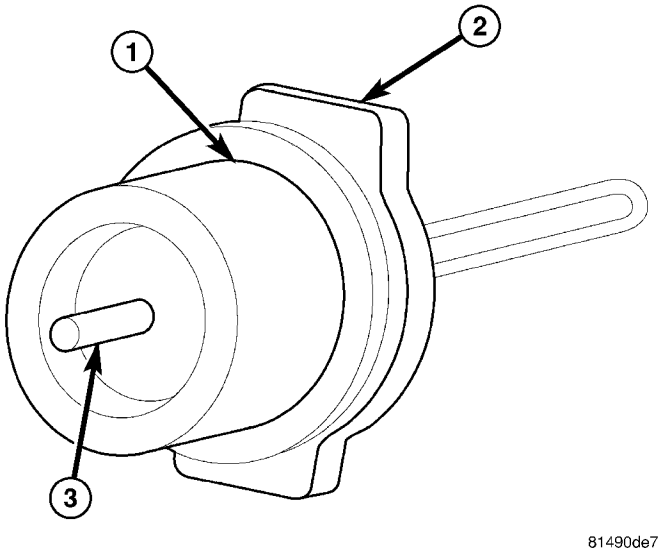

Fig. 33 Vacuum Operated Recirculation Door Actuator

1 - RECIRCULATION DOOR ACTUATOR
2- MOUNTING PROVISION
3 - VACUUM LINE CONNECTOR

RECIRCULATION DOOR ACTUATOR (Continued)

REMOVAL

WARNING: On vehicles equipped with airbags, disable the airbag system before attempting any steering wheel, steering column, or instrument panel component diagnosis or service. Disconnect and isolate the battery negative (ground) cable, then wait two minutes for the airbag system capacitor to discharge before performing further diagnosis or service. This is the only sure way to disable the airbag system. Failure to take the proper precautions could result in an accidental airbag deployment and possible personal injury or death.

(1) Disconnect and isolate the negative battery cable.

(2) Remove the instrument panel from the vehicle (Refer to 23 - BODY/INSTRUMENT PANEL/INSTRUMENT PANEL ASSEMBLY - REMOVAL).

(3) Disconnect the vacuum harness connector from the recirculation door actuator (Fig. 34).

(4) Insert a trim stick C-4755 or equivalent into the latch hole on the HVAC housing actuator mount. Gently pry the actuator latch while pulling firmly outward on the actuator to remove the actuator from the mount (Fig. 35).

(5) Rotate and tilt the actuator as required to disengage the hole on the end of the actuator link from the hooked pin on the end of the recirculation door lever and remove the actuator.

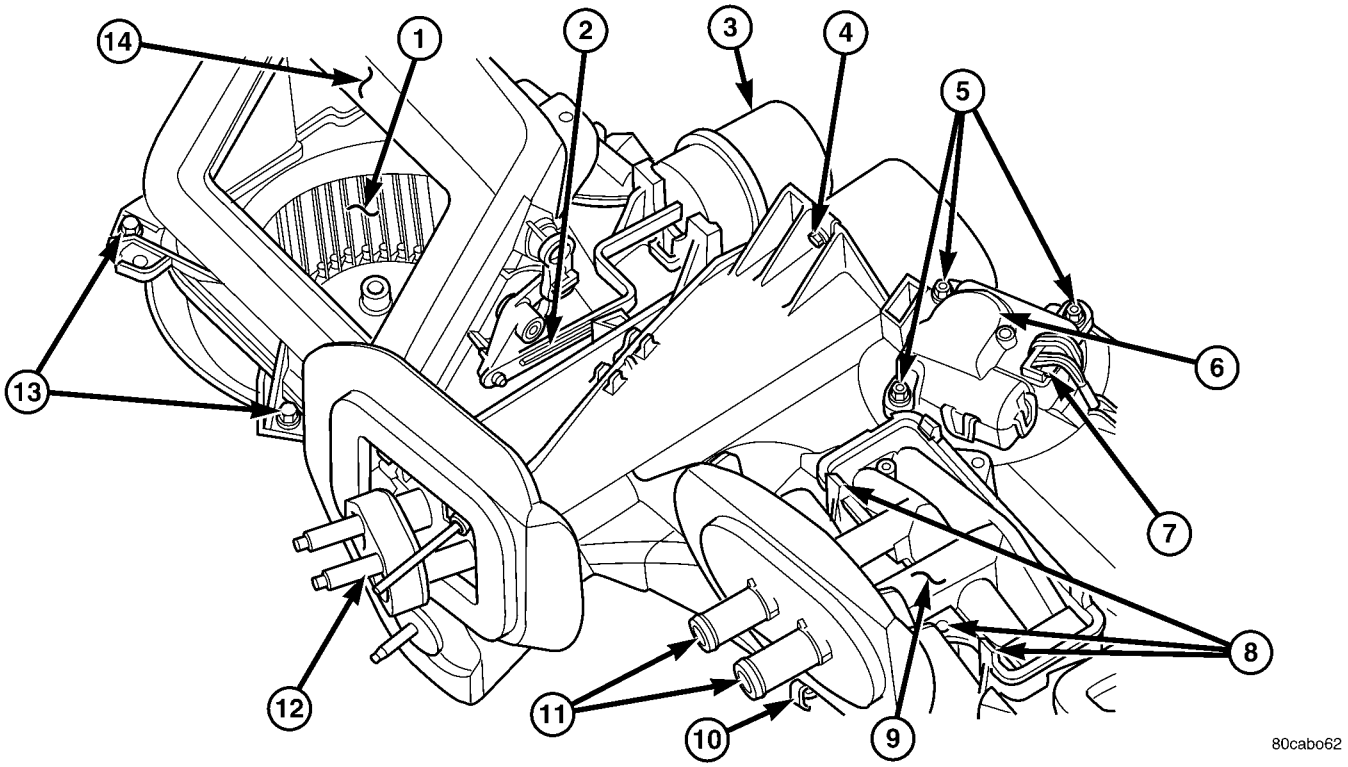

Fig. 34 Recirculation Door Actuator

1 - BLOWER MOTOR
2 - RECIRCULATION DOOR LINKAGE
3 - RECIRCULATION DOOR ACTUATOR
4 - HOUSING SCREW
5 - BLEND DOOR ACTUATOR SCREWS (3)
6 - BLEND DOOR ACTUATOR
7 - ELECTRICAL CONNECTOR
8 - HEATER CORE TABS (4) AND SCREWS (2)
9 - HEATER CORE
10 - RETAINER CLIP
11 - HEATER CORE CONNECTIONS
12 - EVAPORATOR TAPPING BLOCK
13 - HOUSING SCREWS
14 - HVAC HOUSING

RECIRCULATION DOOR ACTUATOR (Continued)

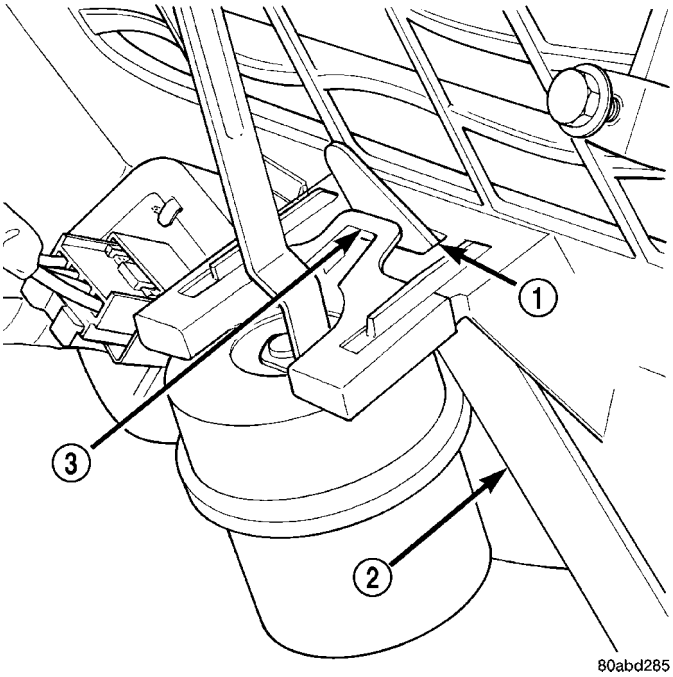

Fig. 35 Recirculation Door Actuator Latch - Typical

1 - ACTUATOR MOUNT LATCH HOLE
2 - TRIM STICK
3 - ACTUATOR LATCH

INSTALLATION

(1) Install the recirculation door actuator by engaging the hole on the end of the actuator link with the hooked pin on the end of the recirculation door lever.

(2) Install the recirculation door actuator to the HVAC housing actuator mount.

(3) Connect the vacuum harness connector to the recirculation door actuator.

(4) Install the instrument panel (Refer to 23 - BODY/INSTRUMENT PANEL/INSTRUMENT PANEL ASSEMBLY - INSTALLATION).

(5) Reconnect the negative battery cable.

VACUUM CHECK VALVE

DESCRIPTION

A vacuum check valve is installed in the accessory vacuum supply line in the engine compartment, near the vacuum tap on the engine intake manifold, and at the HVAC housing takeout. The vacuum check valves are designed to allow vacuum to flow in only one direction through the accessory vacuum supply circuits.

OPERATION

The use of a vacuum check valve helps to maintain the system vacuum needed to retain the selected heating-A/C mode settings. The check valve will prevent the engine from bleeding down system vacuum through the intake manifold during extended heavy engine load (low engine vacuum) operation.

The vacuum check valve cannot be repaired and, if faulty or damaged, it must be replaced.

REMOVAL

(1) Disconnect the HVAC vacuum supply line connector from the vacuum check valve located on the passenger side of the vehicle, behind the glove box (Fig. 36).

NOTE: Note the orientation of the check valve in the vacuum supply line for correct reinstallation.

(2) Disconnect the vacuum check valve from the vacuum actuator supply line connector.

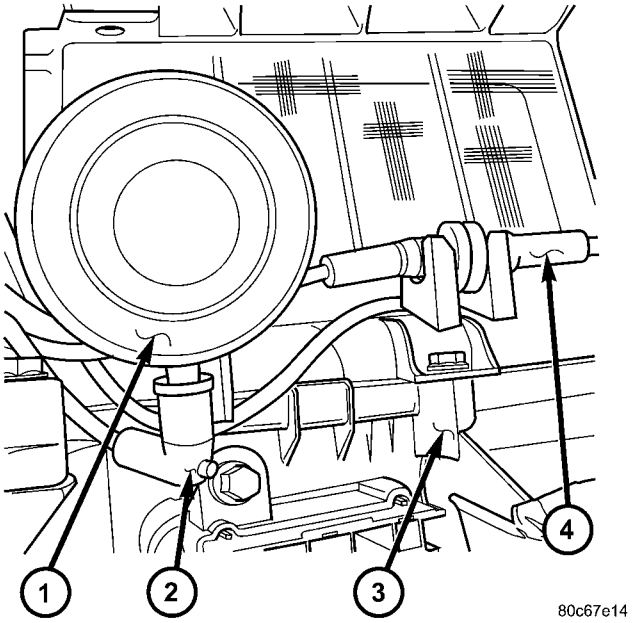

Fig. 36 Vacuum Check Valve

1 - RECIRCULATION DOOR ACTUATOR
2 - VACUUM LINE TO VACUUM RESEVOIR
3 - HVAC HOUSING
4 - VACUUM CHECK VALVE

INSTALLATION

NOTE: Note the orientation of the check valve in the vacuum supply line.

(1) Connect the vacuum check valve to the vacuum actuator supply line connector located on the passenger side of the vehicle, behind the glove box.

(2) Connect the HVAC vacuum supply line connector to the vacuum check valve.

DISTRIBUTION

TABLE OF CONTENTS

	page
AIR OUTLETS	
DESCRIPTION	35
REMOVAL	35
INSTALLATION	35
BLEND DOOR	
REMOVAL	36
INSTALLATION	36
BLOWER MOTOR	
DESCRIPTION	37
OPERATION	37
DIAGNOSIS AND TESTING	
BLOWER MOTOR	37
REMOVAL	38
INSTALLATION	38
DEFROSTER DUCT	
REMOVAL	39
INSTALLATION	39
FLOOR DISTRIBUTION DUCT	
REMOVAL	39
INSTALLATION	39
HVAC HOUSING	
REMOVAL	39
DISASSEMBLY	40
ASSEMBLY	41
INSTALLATION	42
MODE DOOR	
REMOVAL	
PANEL-AIR DOOR	42
FLOOR/DEFROST-AIR DOOR	43
INSTALLATION	
PANEL-AIR DOOR	44
FLOOR/DEFROST-AIR DOOR	44
REAR FLOOR HEAT DUCT	
REMOVAL	44
INSTALLATION	44
RECIRCULATION DOOR	
REMOVAL	45
INSTALLATION	45

AIR OUTLETS

DESCRIPTION

There are four instrument panel air outlets. One air outlet is located near each outboard end of the instrument panel facing the rear of the vehicle and the other two outlets are located near the top of the instrument panel center bezel.

The air outlet located at the right end of the instrument panel is integral to the passenger side air bag door and cannot be serviced separately. The air outlets located at the center of the instrument panel are integral to the instrument panel and cannot be serviced separately. The other instrument panel air outlet is integral to the instrument cluster bezel and cannot be serviced separately.

Each of the instrument panel air outlets contain an air outlet barrel that is used to direct or shut off the flow of the conditioned air leaving the instrument panel.

CAUTION: The instrument panel air outlet barrels can only be installed in one direction. If the outlet barrel is not properly oriented prior to installation, damage to the outlet barrel will occur.

NOTE: Each air outlet barrel is retained into the air outlet housing by two pivot shafts. One pivot shaft is larger than the other. The air outlet barrel must be first installed onto the larger pivot shaft, then snapped into place over the smaller pivot shaft.

All of the instrument panel air outlets barrels can be serviced individually.

REMOVAL

NOTE: The instrument panel air outlet barrels are retained onto the pivots located in the outlet housing by a light snap fit.

(1) Using a trim stick C-4755 or equivalent, gently pry on the panel air outlet barrel(s) until the barrel retainers release from the barrel pivots of the air outlet housing (Fig. 1).

(2) Remove the barrel(s) from the outlet(s). If needed, use a trim stick.

INSTALLATION

CAUTION: The instrument panel air outlet barrels can only be installed in one direction. If the air outlet barrel is not properly oriented prior to installation, damage to the air outlet barrel will occur.

AIR OUTLETS (Continued)

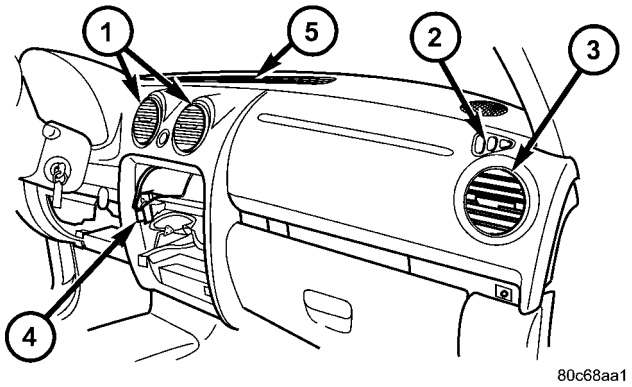

Fig. 1 Instrument Panel Air Outlets

1 - CENTER IP OUTLETS
2 - DEMISTER OUTLETS
3 - END IP OUTLETS
4 - IP CENTER BEZEL
5 - DEFROSTER OUTLET

NOTE: Each air outlet barrel is retained into the air outlet housing by two pivot shafts. One pivot shaft is larger than the other. The air outlet barrel must be first installed onto the larger pivot shaft, then snapped into place over the smaller pivot shaft.

(1) Install the air outlet barrel onto the larger pivot shaft located in the instrument panel outlet.

(2) Gently push the air outlet barrel onto the smaller pivot shaft of the air outlet until it snaps into position.

BLEND DOOR

REMOVAL

WARNING: On vehicles equipped with airbags, disable the airbag system before attempting any steering wheel, steering column, or instrument panel component diagnosis or service. Disconnect and isolate the negative battery (ground) cable, then wait two minutes for the airbag system capacitor to discharge before performing further diagnosis or service. This is the only sure way to disable the airbag system. Failure to take the proper precautions could result in accidental airbag deployment and possible personal injury or death.

WARNING: Refer to the applicable warnings and cautions for this system before performing the following operation (Refer to 24 - HEATING & AIR CONDITIONING/PLUMBING - WARNINGS) and (Refer to 24 - HEATING & AIR CONDITIONING/PLUMBING - CAUTIONS). Failure to follow the warnings and cautions could result in possible personal injury or death.

(1) Remove the HVAC housing (Refer to 24 - HEATING & AIR CONDITIONING/DISTRIBUTION/HVAC HOUSING - REMOVAL).

(2) Disassemble the HVAC housing (Refer to 24 - HEATING & AIR CONDITIONING/DISTRIBUTION/HVAC HOUSING - DISASSEMBLY).

(3) Lift the blend door pivot shaft out of the pivot hole in the bottom of the lower half of the HVAC housing (Fig. 2).

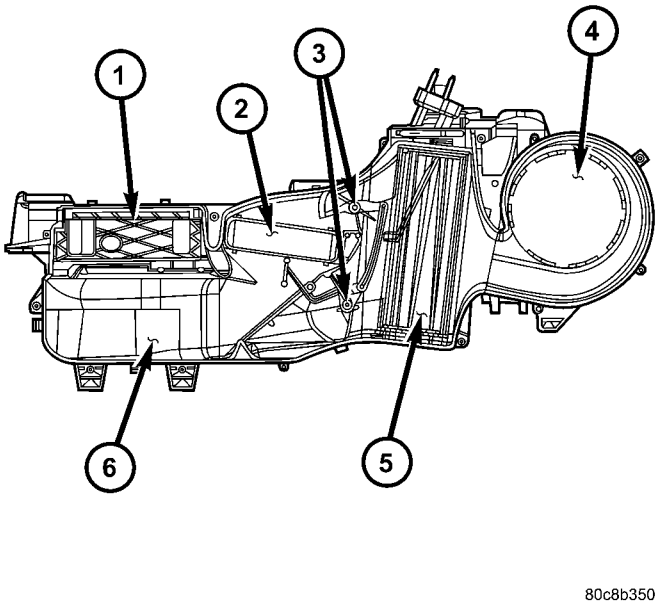

Fig. 2 Blend-Air Door

1 - FLOOR/DEFROSTER DOOR
2 - HEATER CORE
3 - BLEND DOORS
4 - BLOWER MOTOR HOUSING
5 - A/C EVAPORATOR (A/C SYSTEM ONLY)
6 - LOWER HVAC HOUSING

INSTALLATION

(1) Position the blend door pivot shaft into the pivot hole located in the bottom of the lower half of the HVAC housing.

(2) Assemble the HVAC housing (Refer to 24 - HEATING & AIR CONDITIONING/DISTRIBUTION/HVAC HOUSING - ASSEMBLY).

(3) Install the HVAC housing (Refer to 24 - HEATING & AIR CONDITIONING/DISTRIBUTION/HVAC HOUSING - INSTALLATION).

BLOWER MOTOR

DESCRIPTION

The blower motor (Fig. 3) is a 12-volt, direct current (DC) motor mounted within a plastic housing with an integral wire connector and squirrel cage-type blower wheel that is secured to the blower motor shaft. The blower motor wheel is located in the HVAC air inlet housing which is mounted to the passenger side end of the HVAC housing.

The blower motor can be accessed for service from underneath the instrument panel.

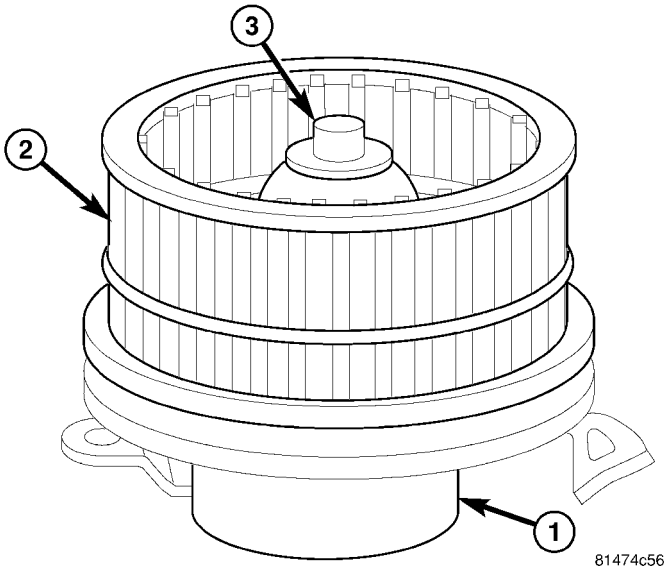

Fig. 3 Blower Motor - Typical

1 - BLOWER MOTOR
2 - BLOWER WHEEL
3 - MOTOR SHAFT

OPERATION

The blower motor is used to control the velocity of air moving through the HVAC housing by spinning the blower wheel within the HVAC air inlet housing at the selected speed.

The blower motor will operate whenever the ignition switch is in the On position and the blower motor control in any position except Off. Blower motor speed is controlled by regulating the path to ground through the blower motor resistor and through the blower motor control located within the A/C-heater control.

The blower motor and blower motor wheel are factory balanced and cannot be adjusted or repaired. If faulty or damaged, the blower motor and blower wheel must be replaced as an assembly.

DIAGNOSIS AND TESTING

BLOWER MOTOR

WARNING: On vehicles equipped with airbags, disable the airbag system before attempting any steering wheel, steering column, or instrument panel component diagnosis or service. Disconnect and isolate the negative battery (ground) cable, then wait two minutes for the airbag system capacitor to discharge before performing further diagnosis or service. Failure to take the proper precautions could result in accidental airbag deployment and possible personal injury or death.

NOTE: For circuit descriptions and diagrams, refer to Air Conditioning/Heater in Group 8W - Wiring Diagrams.

OPERATION

Possible causes of an inoperative blower motor or blower motor not operating in all speeds include:

- Faulty fuse
- Faulty blower motor resistor
- Faulty blower motor switch
- Faulty blower motor
- Faulty blower motor circuit wiring or wire harness connectors

VIBRATION

Possible causes of blower motor vibration include:

- Improper blower motor mounting
- Improper blower wheel mounting
- Deformed blower wheel
- Out of balance blower wheel due to foreign material in the wheel
- Faulty blower motor

NOISE

To determine if the blower motor is the source of the noise, simply switch the blower motor from Off to On. To verify that the blower motor is the source of the noise, unplug the blower motor wire harness connector and operate the heating-A/C system. If the noise goes away, possible causes include:

- Foreign material in the HVAC air inlet housing
- Improper blower motor mounting
- Improper blower wheel mounting
- Faulty blower motor

BLOWER MOTOR (Continued)

REMOVAL

WARNING: On vehicles equipped with airbags, disable the airbag system before attempting any steering wheel, steering column, or instrument panel component diagnosis or service. Disconnect and isolate the battery negative (ground) cable, then wait two minutes for the airbag system capacitor to discharge before performing further diagnosis or service. This is the only sure way to disable the airbag system. Failure to take the proper precautions could result in an accidental airbag deployment and possible personal injury or death.

NOTE: The blower motor is located on the passenger side of the vehicle under the instrument panel. The blower motor can be removed without having to remove the instrument panel or the HVAC housing.

(1) Disconnect and isolate the negative battery cable.

(2) Disconnect the wire harness connector from the blower motor (Fig. 4).

(3) Release the locking tab that secures the blower motor to the HVAC housing and rotate blower motor counterclockwise.

(4) Rotate and tilt the blower motor as needed for clearance to remove the blower motor and wheel from the HVAC housing.

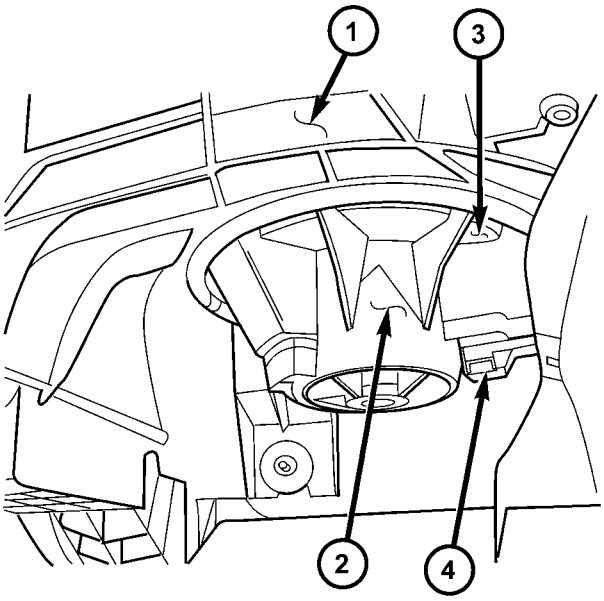

Fig. 4 Blower Motor - LHD shown, RHD similar

1 - HVAC HOUSING
2 - BLOWER MOTOR
3 - RETAINER-LOCKING TAB
4 - BLOWER MOTOR ELECTRICAL CONNECTOR

INSTALLATION

(1) Align and install the blower motor into the HVAC housing.

(2) Rotate the blower motor until all of the locking tabs have secured the blower motor to the HVAC housing.

NOTE: Failure to install the blower motor correctly could result in an air leak or the blower motor becoming completely disengaged from the HVAC housing.

(3) Connect the wire harness connector to the blower motor.

(4) Reconnect the negative battery cable.

(5) Test the blower motor for proper installation by operating the blower motor at its fastest speed while checking around the outer edges of the blower motor and HVAC housing for air leaks. If any are found, remove and reinstall the blower motor.

DEFROSTER DUCT

REMOVAL

WARNING: On vehicles equipped with airbags, disable the airbag system before attempting any steering wheel, steering column, or instrument panel component diagnosis or service. Disconnect and isolate the battery negative (ground) cable, then wait two minutes for the airbag system capacitor to discharge before performing further diagnosis or service. This is the only sure way to disable the airbag system. Failure to take the proper precautions could result in an accidental airbag deployment and possible personal injury or death.

(1) Remove the instrument panel (Refer to 23 - BODY/INSTRUMENT PANEL - REMOVAL).

(2) Remove the three screws that secure the defroster duct to the instrument panel (Fig. 5).

(3) Remove the defroster duct from the instrument panel.

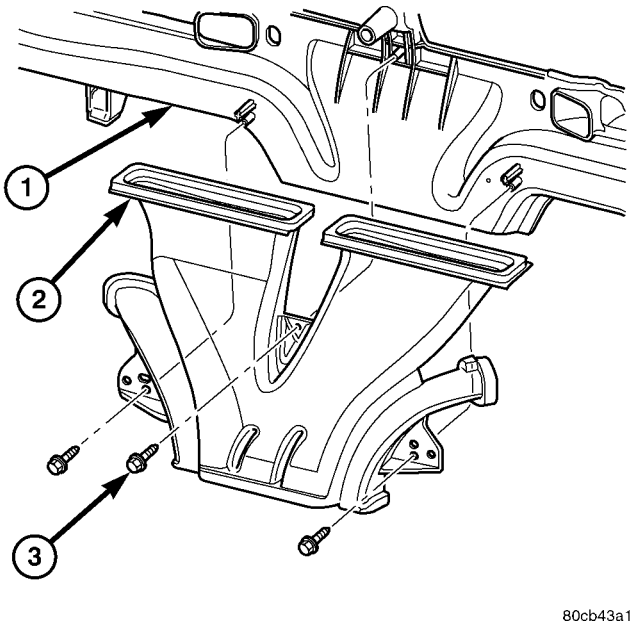

Fig. 5 Defroster Duct

1 - INSTRUMENT PANEL
2 - DEFROSTER DUCT
3 - SCREW (3)

INSTALLATION

(1) Install the defroster duct into the instrument panel.

(2) Install the three screws that secure the defroster duct to the instrument panel. Tighten the screws to 2 N·m (17 in. lbs.).

(3) Install the instrument panel (Refer to 23 - BODY/INSTRUMENT PANEL - INSTALLATION).

FLOOR DISTRIBUTION DUCT

REMOVAL

WARNING: On vehicles equipped with airbags, disable the airbag system before attempting any steering wheel, steering column, or instrument panel component diagnosis or service. Disconnect and isolate the battery negative (ground) cable, then wait two minutes for the airbag system capacitor to discharge before performing further diagnosis or service. This is the only sure way to disable the airbag system. Failure to take the proper precautions could result in an accidental airbag deployment and possible personal injury or death.

(1) Remove the instrument panel (Refer to 23 - BODY/INSTRUMENT PANEL - REMOVAL).

(2) Remove the rear floor heat duct (Refer to 24 - HEATING & AIR CONDITIONING/DISTRIBUTION/ REAR FLOOR HEAT DUCT - REMOVAL).

(3) Remove the three screws that secure the floor distribution duct to the bottom of the HVAC housing and remove the duct.

INSTALLATION

(1) Position the floor distribution duct onto the bottom of the HVAC housing.

(2) Install the three screws that secure the floor distribution duct to the HVAC housing. Tighten the screws to 2 N·m (17 in. lbs.).

(3) Install the rear floor heat duct (Refer to 24 - HEATING & AIR CONDITIONING/DISTRIBUTION/ REAR FLOOR HEAT DUCT - INSTALLATION).

(4) Install the instrument panel (Refer to 23 - BODY/INSTRUMENT PANEL - INSTALLATION).

HVAC HOUSING

REMOVAL

WARNING: On vehicles equipped with airbags, disable the airbag system before attempting any steering wheel, steering column, or instrument panel component diagnosis or service. Disconnect and isolate the battery negative (ground) cable, then wait two minutes for the airbag system capacitor to discharge before performing further diagnosis or service. This is the only sure way to disable the airbag system. Failure to take the proper precautions could result in an accidental airbag deployment and possible personal injury or death.

HVAC HOUSING (Continued)

NOTE: The HVAC housing must be removed from the vehicle and the two halves of the housing separated for service of the heater core, A/C evaporator, blend door and each of the various mode doors.

(1) Disconnect and isolate the negative battery cable.

(2) Remove the instrument panel (Refer to 23 - BODY/INSTRUMENT PANEL - REMOVAL).

(3) If the vehicle is not equipped with A/C, go to Step 8. If the vehicle is equipped with A/C, recover the refrigerant from the refrigerant system (Refer to 24 - HEATING & AIR CONDITIONING/PLUMBING - STANDARD PROCEDURE - REFRIGERANT SYSTEM RECOVERY).

(4) Remove the accumulator and mounting bracket from the dash panel.

(5) Remove the nuts that secure the suction and liquid lines to the evaporator tapping block (Fig. 6).

(6) Disconnect the suction and liquid lines from the evaporator tapping block and remove and discard the O-ring seals.

(7) Install plugs in, or tape over the opened suction and liquid line fittings and evaporator tapping block ports.

(8) Drain the engine cooling system (Refer to 7 - COOLING - STANDARD PROCEDURE).

(9) Disconnect the heater hoses from the heater core tubes. Install plugs in, or tape over the opened heater core tubes.

(10) Disconnect the HVAC system vacuum supply line connector from the engine vacuum harness.

(11) Remove the nuts that secure the HVAC housing to the dash panel in the engine compartment.

(12) Remove the HVAC housing from inside the vehicle taking care not to allow any remaining coolant to drain on the vehicles interior.

DISASSEMBLY

(1) Remove the HVAC housing from the vehicle and place it on a workbench (Refer to 24 - HEATING & AIR CONDITIONING/DISTRIBUTION/HVAC HOUSING - REMOVAL).

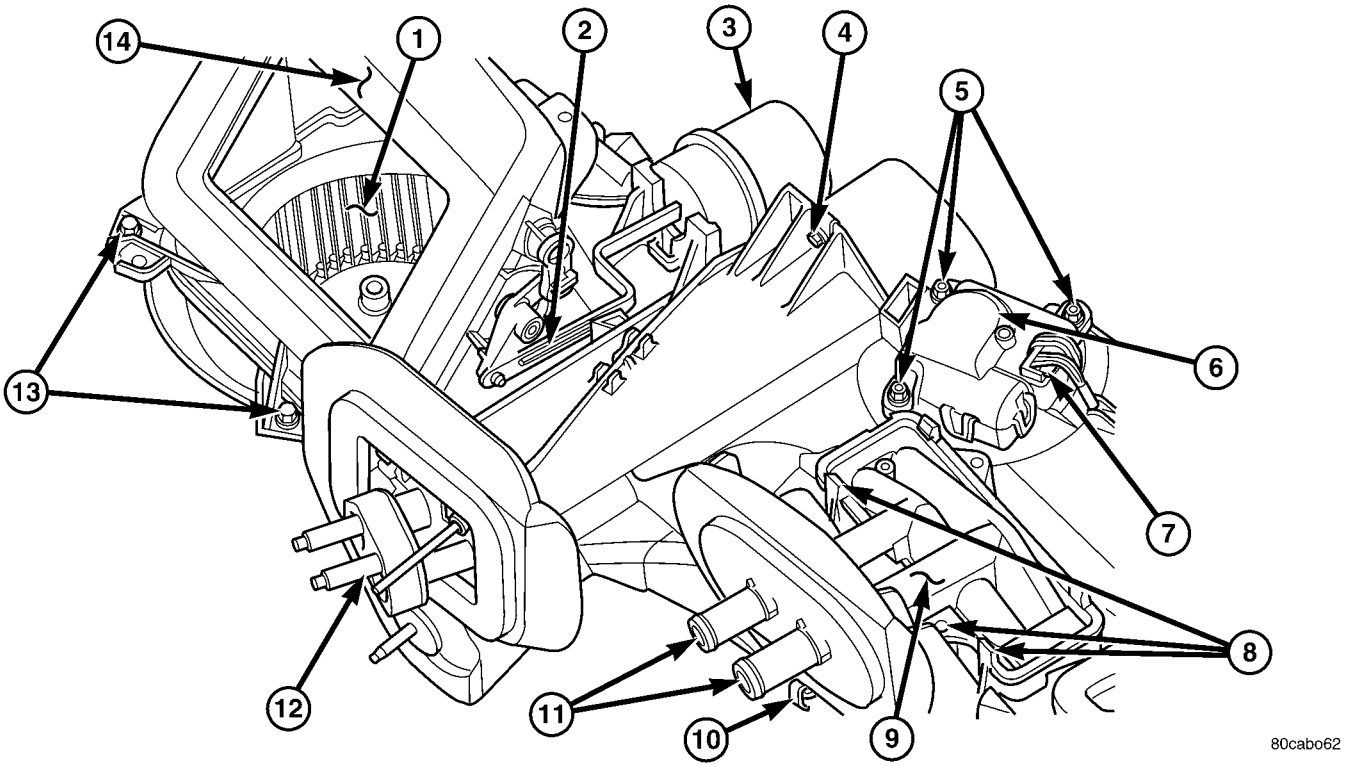

Fig. 6 HVAC Housing

1 - BLOWER MOTOR
2 - RECIRCULATION DOOR LINKAGE
3 - RECIRCULATION DOOR ACTUATOR
4 - HOUSING SCREW
5 - BLEND DOOR ACTUATOR SCREWS (3)
6 - BLEND DOOR ACTUATOR
7 - ELECTRICAL CONNECTOR
8 - HEATER CORE TABS (4) AND SCREWS (2)
9 - HEATER CORE
10 - RETAINER CLIP
11 - HEATER CORE CONNECTIONS
12 - EVAPORATOR TAPPING BLOCK
13 - HOUSING SCREWS
14 - HVAC HOUSING

HVAC HOUSING (Continued)

(2) Disconnect the vacuum harness connectors from the mode and recirculation door actuators (Fig. 7).

(3) Disengage the vacuum harness from the routing clips located on the HVAC housing.

(4) Remove the vacuum harness and grommet from the HVAC housing.

(5) Remove the blower motor from the HVAC housing (Refer to 24 - HEATING & AIR CONDITIONING/DISTRIBUTION/BLOWER MOTOR - REMOVAL).

(6) Carefully remove the foam seals from the heater core and evaporator tapping block flange of the HVAC housing. If either seal is deformed or damaged it must be replaced.

(7) Remove the four snap clip retainers that help secure the upper and lower HVAC housing halves together.

(8) Remove the screws that secure the upper and lower HVAC housing halves together.

(9) Carefully separate the upper HVAC housing from the lower housing.

ASSEMBLY

(1) Position the upper half of the HVAC housing onto the lower half. Be certain of the following.

(a) That each of the mode and blend door shafts are properly engaged into the pivot holes in the HVAC housing.

(b) That the blower motor venturi ring is properly indexed and installed.

(c) If the vehicle is equipped with A/C, that the evaporator seal is properly positioned in the grooves in both the upper and lower HVAC housing halves.

(2) Install the screws and four snap clip retainers that secure the upper and lower housing halves together. Tighten the screws to 2 N·m (1′7 in. lbs.).

(3) Install the blower motor into the HVAC housing (Refer to 24 - HEATING & AIR CONDITIONING/DISTRIBUTION/BLOWER MOTOR - INSTALLATION).

(4) Install the foam seals on the HVAC housing flanges around the heater core and evaporator tapping block.

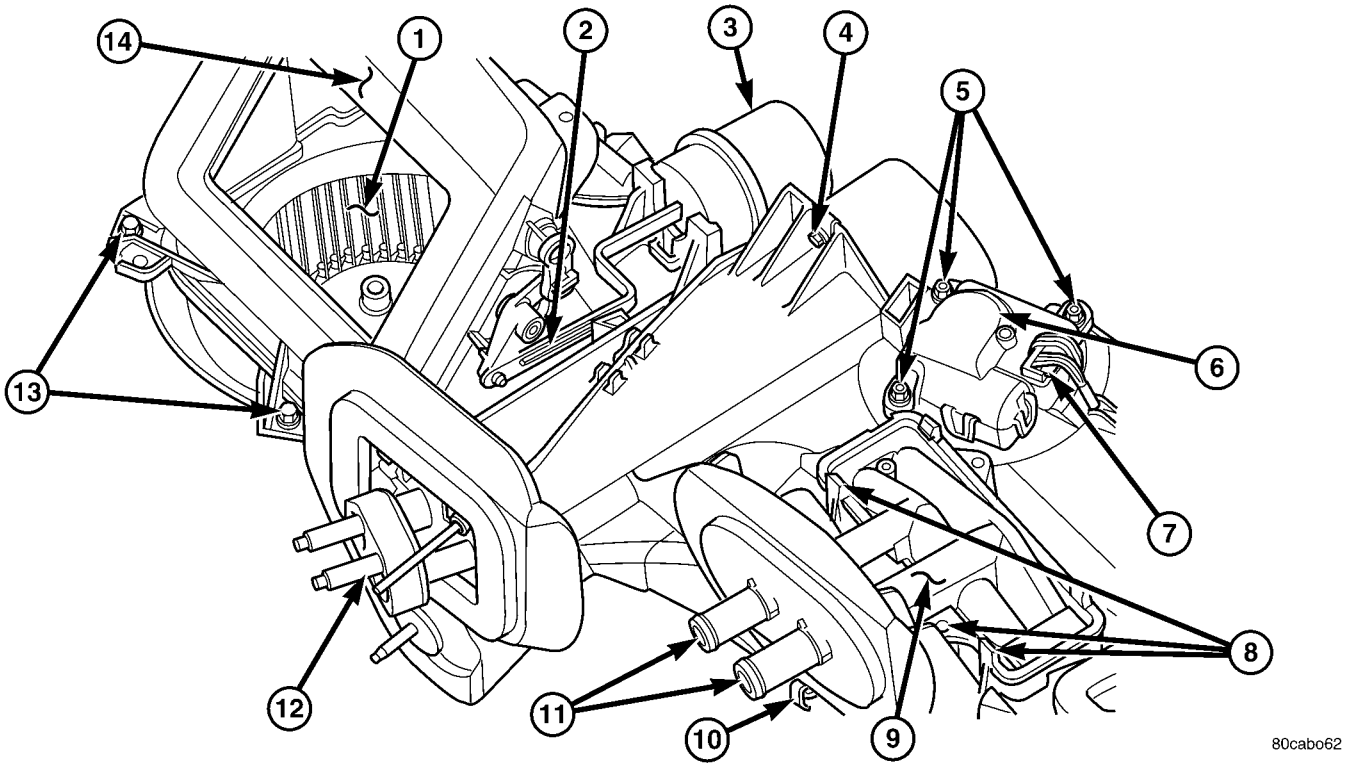

Fig. 7 HVAC Housing

1 - BLOWER MOTOR
2 - RECIRCULATION DOOR LINKAGE
3 - RECIRCULATION DOOR ACTUATOR
4 - HOUSING SCREW
5 - BLEND DOOR ACTUATOR SCREWS (3)
6 - BLEND DOOR ACTUATOR
7 - ELECTRICAL CONNECTOR
8 - HEATER CORE TABS (4) AND SCREWS (2)
9 - HEATER CORE
10 - RETAINER CLIP
11 - HEATER CORE CONNECTIONS
12 - EVAPORATOR TAPPING BLOCK
13 - HOUSING SCREWS
14 - HVAC HOUSING

HVAC HOUSING (Continued)

(5) Install the vacuum supply line and grommet onto the HVAC housing. Check that the vacuum grommet is securely seated.

(6) Engage the vacuum harness to the routing clips and connect the vacuum harness to the vacuum actuators

INSTALLATION

NOTE: Use only the specified O-rings as they are made of special material for R-134a. Use only refrigerant oil of the type required for the A/C compressor in the vehicle.

(1) Position the HVAC housing to the dash panel. Be certain that the evaporator condensate drain tube and the housing mounting studs are inserted into their correct mounting holes.

(2) Install the nuts that secure the HVAC housing to the dash panel in the engine compartment. Tighten the nuts to 6 N·m (53 in. lbs.).

(3) Connect the HVAC system vacuum supply line connector.

(4) Unplug or remove the tape from the heater core tubes and connect the heater hoses to the heater core tubes.

(5) If the vehicle is not equipped with A/C, go to Step 13. If the vehicle is equipped with A/C, unplug or remove the tape from the liquid and suction line fittings and the evaporator tapping block.

(6) Lubricate new rubber O-ring seals with clean refrigerant oil and install them on the liquid and suction line fittings.

(7) Connect the liquid and suction lines to the evaporator tapping block.

(8) Install the nuts that secure the liquid and suction lines to the evaporator tapping block. Tighten the nuts to 23 N·m (17 ft. lbs.).

(9) Install the accumulator and mounting bracket to the mounting studs on the dash panel. Tighten the nuts to 4.5 N·m (40 in. lbs.).

(10) Install the instrument panel (Refer to 23 - BODY/INSTRUMENT PANEL - INSTALLATION).

(11) Evacuate the refrigerant system (Refer to 24 - HEATING & AIR CONDITIONING/PLUMBING - STANDARD PROCEDURE - REFRIGERANT SYSTEM EVACUATE).

(12) Charge the refrigerant system (Refer to 24 - HEATING & AIR CONDITIONING/PLUMBING - STANDARD PROCEDURE - REFRIGERANT SYSTEM CHARGE).

(13) Reconnect the negative battery cable.

(14) If the heater core is being replaced, flush the cooling system (Refer to 7 - COOLING - STANDARD PROCEDURE - COOLING SYSTEM CLEANING/ REVERSE FLUSHING).

(15) Refill the engine cooling system (Refer to 7 - COOLING - STANDARD PROCEDURE - COOLING SYSTEM REFILL).

MODE DOOR

REMOVAL

PANEL-AIR DOOR

WARNING: On vehicles equipped with airbags, disable the airbag system before attempting any steering wheel, steering column, or instrument panel component diagnosis or service. Disconnect and isolate the negative battery (ground) cable, then wait two minutes for the airbag system capacitor to discharge before performing further diagnosis or service. This is the only sure way to disable the airbag system. Failure to take the proper precautions could result in accidental airbag deployment and possible personal injury or death.

WARNING: Refer to the applicable warnings and cautions for this system before performing the following operation (Refer to 24 - HEATING & AIR CONDITIONING/PLUMBING - WARNINGS) and (Refer to 24 - HEATING & AIR CONDITIONING/PLUMBING - CAUTIONS). Failure to follow the warnings and cautions could result in possible personal injury or death.

(1) Remove the HVAC housing (Refer to 24 - HEATING & AIR CONDITIONING/DISTRIBUTION/ HVAC HOUSING - REMOVAL).

(2) Disassemble the HVAC housing (Refer to 24 - HEATING & AIR CONDITIONING/DISTRIBUTION/ HVAC HOUSING - DISASSEMBLY).

(3) Insert a screwdriver into the latch hole of the panel door pivot shaft and release the latch of the panel door lever. Pull the lever out of the pivot shaft from the outside of the upper half of the HVAC housing (Fig. 8).

(4) Remove the panel-air door from the HVAC housing.

MODE DOOR (Continued)

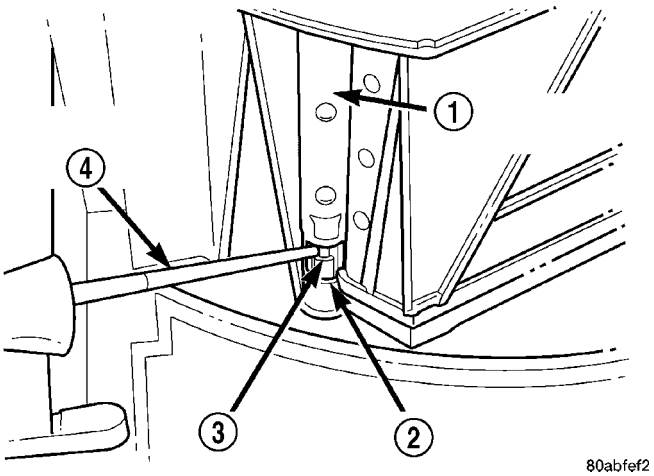

Fig. 8 Panel-Air Door

1 - DOOR PIVOT SHAFT
2 - LATCH HOLE
3 - CRANK ARM LATCH
4 - FLAT BLADE PRY TOOL

FLOOR/DEFROST-AIR DOOR

WARNING: On vehicles equipped with airbags, disable the airbag system before attempting any steering wheel, steering column, or instrument panel component diagnosis or service. Disconnect and isolate the negative battery (ground) cable, then wait two minutes for the airbag system capacitor to discharge before performing further diagnosis or service. This is the only sure way to disable the airbag system. Failure to take the proper precautions could result in accidental airbag deployment and possible personal injury or death.

WARNING: Refer to the applicable warnings and cautions for this system before performing the following operation (Refer to 24 - HEATING & AIR CONDITIONING/PLUMBING - WARNINGS) and (Refer to 24 - HEATING & AIR CONDITIONING/PLUMBING - CAUTIONS). Failure to follow the warnings and cautions could result in possible personal injury or death.

(1) Remove the HVAC housing (Refer to 24 - HEATING & AIR CONDITIONING/DISTRIBUTION/ HVAC HOUSING - REMOVAL).

(2) Disassemble the HVAC housing (Refer to 24 - HEATING & AIR CONDITIONING/DISTRIBUTION/ HVAC HOUSING - DISASSEMBLY).

(3) Remove the floor/defrost door actuator from the bottom of the HVAC housing (Refer to 24 - HEATING & AIR CONDITIONING/CONTROLS/MODE DOOR ACTUATOR - REMOVAL).

(4) Insert a screwdriver into the latch hole of the floor/defrost door pivot shaft to release the latch of the floor/defrost door lever, and pull the lever out of the pivot shaft from the outside of the lower half of the HVAC housing (Fig. 9).

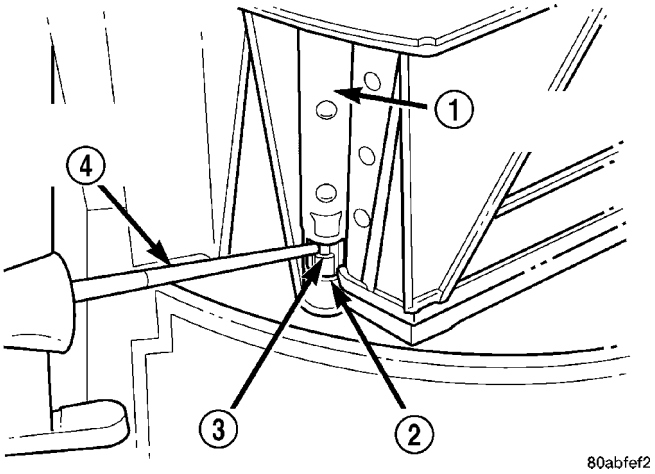

Fig. 9 Floor/Defrost Door Latch - Typical

1 - DOOR PIVOT SHAFT
2 - LATCH HOLE
3 - CRANK ARM LATCH
4 - FLAT BLADE PRY TOOL

(5) Reach inside the lower half of the HVAC housing and carefully flex the floor/defrost-air door enough so that the door pivot clears the pivot hole in the housing (Fig. 10).

(6) Remove the floor/defrost-air door from the HVAC housing.

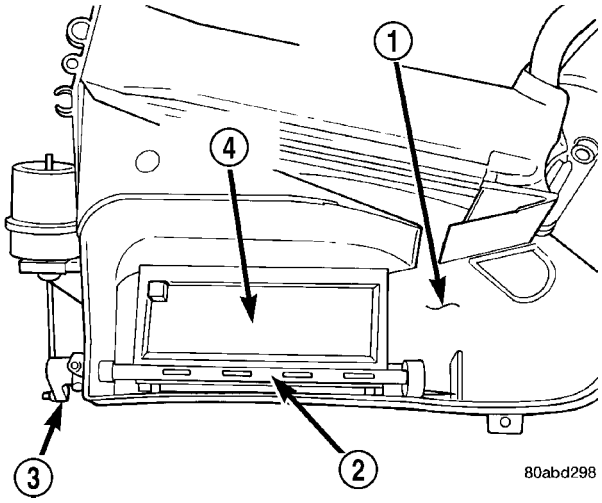

Fig. 10 Floor/Defrost-Air Door - Typical

1 - LOWER HVAC HOUSING
2 - PIVOT SHAFT
3 - CRANK ARM
4 - FLOOR/DEFROST DOOR

MODE DOOR (Continued)

INSTALLATION

PANEL-AIR DOOR

(1) Install the panel-air door into the HVAC housing.

(2) Snap the panel door pivot shaft over the latch of the panel door lever.

(3) Assemble the HVAC housing (Refer to 24 - HEATING & AIR CONDITIONING/DISTRIBUTION/HVAC HOUSING - ASSEMBLY).

(4) Install the HVAC housing (Refer to 24 - HEATING & AIR CONDITIONING/DISTRIBUTION/HVAC HOUSING - INSTALLATION).

FLOOR/DEFROST-AIR DOOR

(1) Install the floor/defrost-air door into the HVAC housing by placing the door in the lower housing.

(2) Snap the floor/defrost door pivot shaft over the latch of the door lever.

(3) Assemble the HVAC housing (Refer to 24 - HEATING & AIR CONDITIONING/DISTRIBUTION/HVAC HOUSING - ASSEMBLY)

(4) Install the floor/defrost door actuator to the bottom of the HVAC housing (Refer to 24 - HEATING & AIR CONDITIONING/CONTROLS/MODE DOOR ACTUATOR - INSTALLATION).

(5) Install the HVAC housing (Refer to 24 - HEATING & AIR CONDITIONING/DISTRIBUTION/HVAC HOUSING - INSTALLATION).

REAR FLOOR HEAT DUCT

REMOVAL

(1) Remove the floor console (Refer to 23 - BODY/INTERIOR/FLOOR CONSOLE - REMOVAL).

(2) Remove the screw that secures the rear floor heat duct to the floor console bracket (Fig. 11).

(3) Disengage the rear floor heat duct from the floor distribution duct.

(4) Remove the rear floor heat duct from the vehicle.

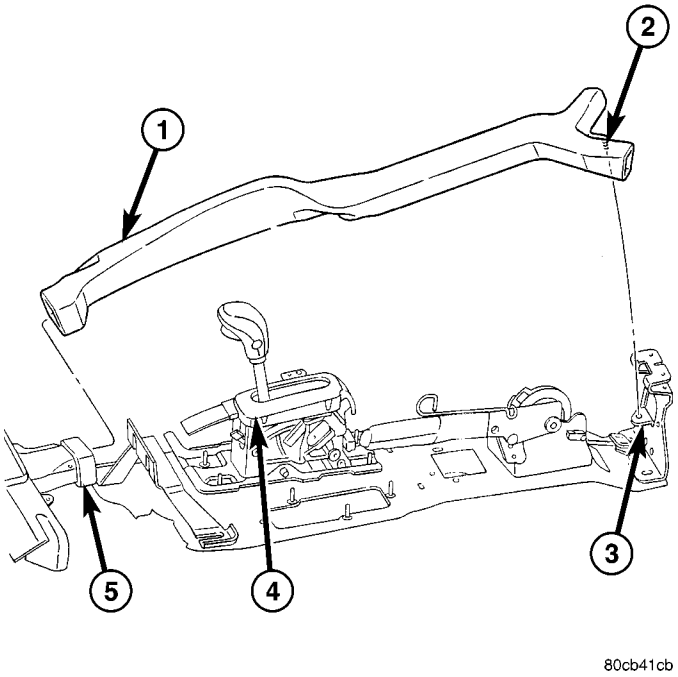

Fig. 11 Rear Floor Heat Duct

1 - REAR FLOOR HEAT DUCT
2 - SCREW
3 - CONSOLE BRACKET
4 - TRANSMISSION SHIFT LEVER ASSEMBLY
5 - FLOOR DISTRIBUTION DUCT

INSTALLATION

(1) Position the rear floor heat duct into the vehicle.

(2) Connect the rear floor heat duct to the floor distribution duct.

(3) Install the screw that secures the rear floor heat duct to the floor console bracket. Tighten the screw to 2 N·m (17 in. lbs.).

(4) Install the floor console (Refer to 23 - BODY/INTERIOR/FLOOR CONSOLE - INSTALLATION).

RECIRCULATION DOOR

REMOVAL

WARNING: On vehicles equipped with airbags, disable the airbag system before attempting any steering wheel, steering column, or instrument panel component diagnosis or service. Disconnect and isolate the negative battery (ground) cable, then wait two minutes for the airbag system capacitor to discharge before performing further diagnosis or service. This is the only sure way to disable the airbag system. Failure to take the proper precautions could result in accidental airbag deployment and possible personal injury or death.

WARNING: Refer to the applicable warnings and cautions for this system before performing the following operation (Refer to 24 - HEATING & AIR CONDITIONING/PLUMBING - WARNINGS) and (Refer to 24 - HEATING & AIR CONDITIONING/PLUMBING - CAUTIONS). Failure to follow the warnings and cautions could result in possible personal injury or death.

NOTE: A recirculation-air door and vacuum actuator are used only on models equipped with A/C.

(1) Remove the HVAC housing (Refer to 24 - HEATING & AIR CONDITIONING/DISTRIBUTION/HVAC HOUSING - REMOVAL).

(2) Remove the recirculation door actuator (Refer to 24 - HEATING & AIR CONDITIONING/CONTROLS/RECIRCULATION DOOR ACTUATOR - REMOVAL).

(3) Dissassemble the HVAC housing (Refer to 24 - HEATING & AIR CONDITIONING/DISTRIBUTION/HVAC HOUSING - DISASSEMBLY).

(4) Insert a screwdriver into the latch hole of the panel door pivot shaft to release the latch of the panel door lever and pull the lever out of the pivot shaft from the outside of the upper half of the HVAC housing.

INSTALLATION

(1) Guide the recirculation door lever through the air intake grille of the HVAC housing while installing the door in the housing.

(2) Assemble the HVAC housing (Refer to 24 - HEATING & AIR CONDITIONING/DISTRIBUTION/HVAC HOUSING - ASSEMBLY).

(3) Install the recirculation door actuator (Refer to 24 - HEATING & AIR CONDITIONING/CONTROLS/RECIRCULATION DOOR ACTUATOR - INSTALLATION)

(4) Install the HVAC housing (Refer to 24 - HEATING & AIR CONDITIONING/DISTRIBUTION/HVAC HOUSING - INSTALLATION).

PLUMBING

TABLE OF CONTENTS

page

PLUMBING
DESCRIPTION 47
OPERATION 47
WARNINGS 47
CAUTIONS 47
DIAGNOSIS AND TESTING
REFRIGERANT SYSTEM LEAKS 48
STANDARD PROCEDURE
REFRIGERANT SYSTEM SERVICE EQUIPMENT 49
REFRIGERANT SYSTEM CHARGE LEVEL . . 50
REFRIGERANT SYSTEM RECOVERY 51
REFRIGERANT SYSTEM EVACUATE 51
REFRIGERANT SYSTEM CHARGE 52
A/C COMPRESSOR
DESCRIPTION
A/C COMPRESSOR 53
HIGH PRESSURE RELIEF VALVE 53
OPERATION
A/C COMPRESSOR 53
HIGH PRESSURE RELIEF VALVE 53
DIAGNOSIS AND TESTING
A/C COMPRESSOR NOISE 53
REMOVAL 54
INSTALLATION 55
A/C CONDENSER
DESCRIPTION 56
OPERATION 56
REMOVAL 56
INSTALLATION 56
A/C DISCHARGE LINE
DESCRIPTION 57
REMOVAL 57
INSTALLATION 58
A/C EVAPORATOR
DESCRIPTION 59
OPERATION 59
REMOVAL 60
INSTALLATION 60
A/C ORIFICE TUBE
DESCRIPTION 60
OPERATION 60
DIAGNOSIS AND TESTING
A/C ORIFICE TUBE 61
ACCUMULATOR
DESCRIPTION 61
OPERATION 61
REMOVAL 62
INSTALLATION 62
HEATER CORE
DESCRIPTION 63
OPERATION 63
REMOVAL 63
INSTALLATION 64
LIQUID LINE
DESCRIPTION 64
REMOVAL 64
INSTALLATION 65
REFRIGERANT
DESCRIPTION 65
OPERATION 65
REFRIGERANT OIL
DESCRIPTION 65
OPERATION 65
STANDARD PROCEDURE
REFRIGERANT OIL LEVEL 66
SERVICE PORT VALVE CORE
DESCRIPTION 66
REMOVAL 66
INSTALLATION 67
SUCTION LINE
DESCRIPTION 67
REMOVAL 68
INSTALLATION 68
CABIN HEATER
DESCRIPTION 69
OPERATION 69
REMOVAL 69
INSTALLATION 70

PLUMBING

DESCRIPTION

The A/C refrigerant lines and hoses are used to carry the refrigerant between the various A/C system components. The refrigerant lines and hoses for the R-134a system on this vehicle consist of a barrier-hose design with a nylon tube sandwiched between rubber layers. The nylon tube helps to contain the R-134a refrigerant, which has a smaller molecular structure than R-12 refrigerant. The ends of the refrigerant lines are made from lightweight aluminum or steel, and commonly use braze-less fittings.

Any kinks or sharp bends in the refrigerant lines and hoses will reduce the capacity of the entire A/C system and can reduce the flow of refrigerant in the system. The radius of all bends in the flexible hose refrigerant lines should be at least ten times the diameter of the hose and the refrigerant lines should be routed so they are at least 80 millimeters (3 inches) away from the exhaust manifold(s) and exhaust pipe(s).

OPERATION

High pressures are produced in the refrigerant system when the A/C compressor is operating. Extreme care must be exercised to make sure that each of the refrigerant system connections is pressure-tight and leak free. It is a good practice to inspect all flexible hose refrigerant lines at least once a year to make sure they are in good condition and properly routed.

The refrigerant lines and hoses are coupled to other A/C system components with block-type fittings. An O-ring seal, or a flat steel gasket with an integral O-ring (dual plane seal), is used to mate the refrigerant line fittings with A/C system components to ensure the integrity of the refrigerant system.

The refrigerant lines and hoses cannot be repaired and, if faulty or damaged, they must be replaced.

WARNINGS

WARNING: The A/C system contains refrigerant under high pressure. Repairs should only be performed by qualified service personnel. Severe personal injury or death may result from improper service procedures.

WARNING: Avoid breathing the refrigerant and refrigerant oil vapor or mist. Exposure may irritate the eyes, nose, and/or throat. Wear eye protection when servicing the A/C refrigerant system. Serious eye injury can result from direct contact with the refrigerant. If eye contact occurs, seek medical attention immediately.

WARNING: Do not expose the refrigerant to open flame. Poisonous gas is created when refrigerant is burned. An electronic leak detector is recommended. Severe personal injury or death may result from improper service procedures.

WARNING: If accidental system discharge occurs, ventilate the work area before resuming service. Large amounts of refrigerant released in a closed work area will displace the oxygen and cause suffocation and death.

WARNING: The evaporation rate of R-134a refrigerant at average temperature and altitude is extremely high. As a result, anything that comes in contact with the refrigerant will freeze. Always protect the skin or delicate objects from direct contact with the refrigerant.

WARNING: The R-134a service equipment or the vehicle refrigerant system should not be pressure tested or leak tested with compressed air. Some mixtures of air and R-134a have been shown to be combustible at elevated pressures. These mixtures are potentially dangerous, and may result in fire or explosion causing property damage, personal injury or death.

WARNING: The engine cooling system is designed to develop internal pressures of 97 to 123 kilopascals (14 to 18 pounds per square inch). Do not remove or loosen the coolant pressure cap, cylinder block drain plugs, radiator drain, radiator hoses, heater hoses, or hose clamps while the engine cooling system is hot and under pressure. Allow the vehicle to cool for a minimum of 15 minutes before opening the cooling system for service. Failure to observe this warning can result in serious burns from the heated engine coolant.

CAUTIONS

CAUTION: Never add R-12 to a refrigerant system designed to use R-134a. Do not use R-12 equipment or parts on a R-134a A/C system. These refrigerants are not compatible and damage to the A/C system will result.

CAUTION: Never use R-12 refrigerant oil in a A/C system designed to use R-134a refrigerant oil. These refrigerant oils are not compatible and damage to the A/C system will result.

PLUMBING (Continued)

CAUTION: The use of A/C system sealers may result in damage to A/C refrigerant recovery/evacuation/recharging equipment and/or A/C system. Many federal, state/provincial and local regulations prohibit the recharge of A/C systems with known leaks. DaimlerChrysler recommends the detection of A/C system leaks through the use of approved leak detectors and fluorescent leak detection dyes. Vehicles found with A/C system sealers should be treated as contaminated and replacement of the entire A/C refrigerant system is recommended. A/C systems found to be contaminated with A/C system sealers, A/C stop-leak products or seal conditioners voids the warranty for the A/C system.

CAUTION: Recover the refrigerant before opening any fitting or connection. Open the fittings with caution, even after the system has been discharged. Never open or loosen a connection before recovering the refrigerant.

CAUTION: If equipped, do not remove the secondary retention clip from any spring-lock coupler connection while the refrigerant system is under pressure. Recover the refrigerant before removing the secondary retention clip. Open the fittings with caution, even after the system has been discharged. Never open or loosen a connection before recovering the refrigerant.

CAUTION: The internal parts of the A/C system will remain stable as long as moisture-free refrigerant and refrigerant oil is used. Abnormal amounts of dirt, moisture or air can upset the chemical stability. This may cause operational troubles or even serious damage if present in more than very small quantities. Before disconnecting a component, clean the outside of the fittings thoroughly to prevent contamination from entering the refrigerant system. Keep service tools and the work area clean. Do not open the refrigerant system or uncap a replacement component until you are ready to service the system. Immediately after disconnecting a component from the refrigerant system, seal the open fittings with a cap or plug. This will prevent contamination from entering the A/C system.

CAUTION: Refrigerant oil will absorb moisture from the atmosphere if left uncapped. Do not open a container of refrigerant oil until you are ready to use it. Replace the cap on the oil container immediately after using. Store refrigerant oil only in a clean, airtight, and moisture-free container.

CAUTION: Do not overcharge the refrigerant system. Overcharging will cause excessive compressor head pressure and can cause compressor noise and A/C system failure.

DIAGNOSIS AND TESTING

REFRIGERANT SYSTEM LEAKS

WARNING: Refer to the applicable warnings and cautions for this system before performing the following operation (Refer to 24 - HEATING & AIR CONDITIONING/PLUMBING - WARNINGS) and (Refer to 24 - HEATING & AIR CONDITIONING/PLUMBING - CAUTIONS). Failure to follow the warnings and cautions could result in possible personal injury or death.

If the A/C system is not cooling properly, determine if the refrigerant system is fully-charged (Refer to 24 - HEATING & AIR CONDITIONING/PLUMBING - DIAGNOSIS AND TESTING - REFRIGERANT SYSTEM CHARGE LEVEL).

If the refrigerant system is low or empty; a leak at a refrigerant line, connector fitting, component, or component seal is likely. While an oily residue on or near refrigerant system lines, connector fittings, components, or component seals can indicate the general location of a possible refrigerant leak, the exact leak location should be confirmed with an electronic leak detector prior to component repair or replacement. An electronic leak detector designed for R-134a refrigerant is recommended for locating and confirming refrigerant system leaks. See the operating instructions supplied by the equipment manufacturer for proper care and use of this equipment.

To detect a leak in the refrigerant system, perform one of the following procedures as indicated by the results of the refrigerant system charge level test.

SYSTEM EMPTY

(1) Evacuate the refrigerant system (Refer to 24 - HEATING & AIR CONDITIONING/PLUMBING - STANDARD PROCEDURE - REFRIGERANT SYSTEM EVACUATE).

(2) Connect and dispense 0.283 kilograms (0.625 pounds or 10 ounces) of R-134a refrigerant into the evacuated refrigerant system (Refer to 24 - HEATING & AIR CONDITIONING/PLUMBING - STANDARD PROCEDURE - REFRIGERANT SYSTEM CHARGE).

(3) Proceed to the SYSTEM LOW procedures.

PLUMBING (Continued)

SYSTEM LOW

(1) Position the vehicle in a wind-free work area. This will aid in detecting small leaks.

(2) Bring the refrigerant system up to operating temperature and pressure. This is done by allowing the engine to run at idle under the following conditions for five minutes, then turning the engine off.

(a) Front windows open.

(b) Transmision in Park or Neutral with the park brake set.

(c) A/C-heater controls set to fresh air, panel mode, high blower speed and A/C compressor engaged.

(3) Wait five to seven minutes and, with the engine not running, use a electronic R-134a leak detector and search for leaks. Because R-134a refrigerant is heavier than air, the leak detector probe should be moved slowly along the bottom side of all refrigerant lines, connector fittings and components.

(4) To inspect an A/C evaporator for leaks, insert the electronic leak detector probe into a floor outlet or the recirculation air intake.

STANDARD PROCEDURE

REFRIGERANT SYSTEM SERVICE EQUIPMENT

WARNING: Refer to the applicable warnings and cautions for this system before performing the following operation (Refer to 24 - HEATING & AIR CONDITIONING/PLUMBING - WARNINGS) and (Refer to 24 - HEATING & AIR CONDITIONING/PLUMBING - CAUTIONS). Failure to follow the warnings and cautions could result in possible personal injury or death.

WARNING: Eye protection must be worn when servicing an air conditioning refrigerant system. Turn off (rotate clockwise) all valves on the equipment being used, before connecting to or disconnecting from the refrigerant system. Failure to observe these warnings may result in personal injury or death.

RECOVERY/RECYCLING STATION

When servicing the air conditioning system, a R-134a refrigerant recovery/recycling/charging station that meets SEA Standard J2210 must be used (Fig. 1). Contact an automotive service equipment supplier for refrigerant recovery/recycling/charging equipment. See the operating instructions supplied by the equipment manufacturer for proper care and use of this equipment.

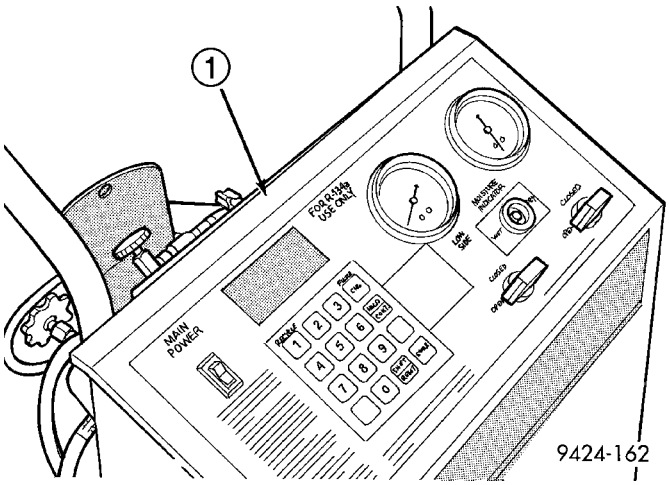

Fig. 1 Refrigerant Recovery/Recycling Station - Typical

1 - R-134a REFRIGERANT STATION

MANIFOLD GAUGE SET

CAUTION: Do not use an R-12 manifold gauge set on an R-134a system. The refrigerants are not compatible and system damage will result.

A manifold gauge set may be needed with some recovery/recycling/charging equipment (Fig. 2). The service hoses on the gauge set being used should have manual (turn wheel), or automatic back-flow valves at the service port connector ends. This will prevent refrigerant from being released into the atmosphere.

MANIFOLD GAUGE SET CONNECTIONS

CAUTION: Do not use an R-12 manifold gauge set on an R-134a system. The refrigerants are not compatible and system damage will result.

- **LOW PRESSURE GAUGE HOSE** - The low pressure hose (Blue with Black stripe) attaches to the suction (low-side) service port. This port is located on the A/C liquid line near the front of the engine compartment.
- **HIGH PRESSURE GAUGE HOSE** - The high pressure hose (Red with Black stripe) attaches to the discharge (high-side) service port. This port is located on the A/C discharge line near the A/C condenser.
- **RECOVERY, RECYCLING, EVACUATION AND CHARGING HOSE** - The center manifold hose (Yellow, or White, with Black stripe) is used to recover, evacuate, and charge the refrigerant system. When the low or high pressure valves on the manifold gauge set are opened, the refrigerant in the system will escape through this hose.

PLUMBING (Continued)

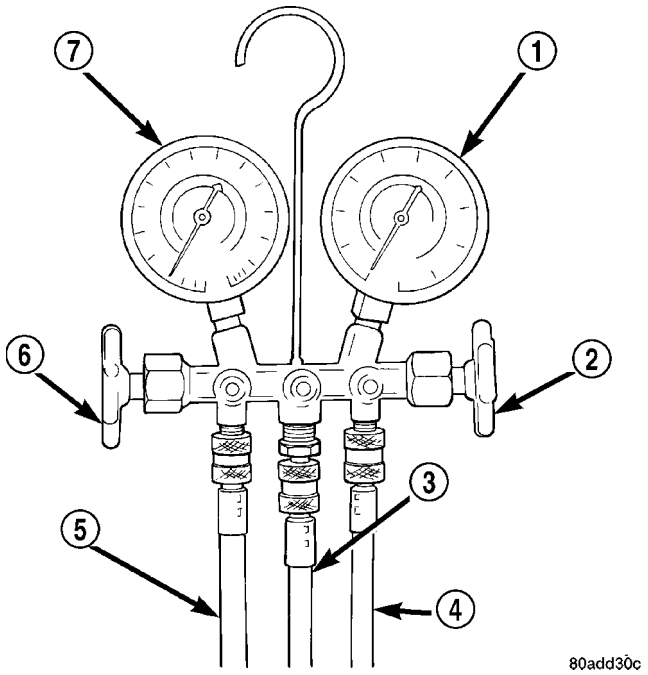

Fig. 2 Manifold Gauge Set - Typical

1 - HIGH PRESSURE GAUGE
2 - VALVE
3 - VACUUM/REFRIGERANT HOSE (YELLOW W/BLACK STRIPE)
4 - HIGH PRESSURE HOSE (RED W/BLACK STRIPE)
5 - LOW PRESSURE HOSE (BLUE W/BLACK STRIPE)
6 - VALVE
7 - LOW PRESSURE GAUGE

REFRIGERANT SYSTEM CHARGE LEVEL

WARNING: Refer to the applicable warnings and cautions for this system before performing the following operation (Refer to 24 - HEATING & AIR CONDITIONING/PLUMBING - WARNINGS) and (Refer to 24 - HEATING & AIR CONDITIONING/PLUMBING - CAUTIONS). Failure to follow the warnings and cautions could result in possible personal injury or death.

NOTE: Always refer to the A/C Underhood Specification Label for the refrigerant fill capacity of the vehicle being serviced.

The following procedure should be used to determine whether the A/C refrigerant system contains the proper refrigerant charge. Symptoms of an improper refrigerant charge (low) include: poor A/C performance, fog emitted from the air outlets, a hissing sound from the A/C orifice tube/liquid line area. There are two different methods with which the refrigerant charge level may be tested:

1. Using a DRBIII® scan tool, a thermocouple and the Charge Determination Chart (Fig. 3). Refer to the appropriate diagnostic information.

2. Using a manifold gauge set, a thermocouple and the Charge Determination Chart (Fig. 3).

A temperature probe is required to measure liquid line temperature. The clamp-on, Type K thermocouple temperature probe used in this procedure is available through the DaimlerChrysler Professional Service Equipment (PSE) program. This probe (PSE #66-324-0014 or #80PK-1A) is compatible with temperature-measuring instruments that accept Type K thermocouples, and have a miniature connector input. Other temperature probes are available through aftermarket sources; however, all references in this procedure will reflect the use of the probe made available through the PSE program.

In order to use the temperature probe, a digital thermometer will also be required. If a digital thermometer is not available, an adapter is available through the PSE program that will convert any standard digital multimeter into a digital thermometer. This adapter is designed to accept any standard Type K thermocouple. If a digital multimeter is not available, this tool is also available through the PSE program.

NOTE: When connecting the service equipment couplings to the refrigerant system service ports, be certain that the valve of each coupling is fully closed. This will reduce the amount of effort required to make the connection.

(1) Remove the caps from the refrigerant system service ports and attach a manifold gauge set or a R-134a refrigerant recovery/recycling/charging station that meets SAE Standard J2210 to the refrigerant system.

(2) Attach a clamp-on thermocouple to the A/C liquid line. The thermocouple must be placed as close as possible to the inlet end of the A/C orifice tube to accurately observe liquid line temperature.

(3) Bring the refrigerant system up to operating temperature and pressure. This is done by allowing the engine to run at idle under the following conditions for five minutes.

(a) Front windows are open.

(b) Transmission in Park or Neutral with the parking brake set.

(c) A/C-heater controls set to fresh air, full cool, panel outlet mode, high blower speed and the A/C compressor engaged.

(4) Raise the liquid line (discharge) pressure to about 1793 kPa (260 psi) by placing a piece of cardboard over the front of the A/C condenser. To place the cardboard properly, remove the upper radiator sight shield (if equipped) and cover only enough of the A/C condenser to raise and maintain the liquid line pressure at the previously specified level.

PLUMBING (Continued)

(5) Observe the liquid line (discharge) pressure and liquid line temperature. Using the Charge Determination Chart (Fig. 3), determine whether the refrigerant system is operating within the proper charge range.

(a) If the refrigerant system is operating in the undercharged area of the chart, add 0.057 kilogram (0.125 pound or 2 ounces) of R-134a refrigerant to the system.

(b) If the refrigerant system is operating in the overcharged area of the chart, reclaim 0.057 kilogram (0.125 pound or 2 ounces) of refrigerant from the system.

(6) Recheck the refrigerant system charge level following each refrigerant level adjustment. Continue this process until the refrigerant system readings are in the proper charge range on the Charge Determination Chart.

REFRIGERANT SYSTEM RECOVERY

WARNING: Refer to the applicable warnings and cautions for this system before performing the following operation (Refer to 24 - HEATING & AIR CONDITIONING/PLUMBING - WARNINGS) and (Refer to 24 - HEATING & AIR CONDITIONING/PLUMBING - CAUTIONS). Failure to follow the warnings and cautions could result in possible personal injury or death.

A R-134a refrigerant recovery/recycling/charging station that meets SAE Standard J2210 must be used to recover the refrigerant from an R-134a refrigerant system. Refer to the operating instructions supplied by the equipment manufacturer for the proper care and use of this equipment.

REFRIGERANT SYSTEM EVACUATE

NOTE: Special effort must be used to prevent moisture from entering the A/C system oil. Moisture in the oil is very difficult to remove and will cause a reliability problem with the A/C compressor.

If an A/C compressor designed to use R-134a refrigerant is left open to the atmosphere for an extended period of time. It is recommended that the refrigerant oil be drained and replaced with new oil or a new A/C compressor be used. This will eliminate the possibility of contaminating the refrigerant system.

If the refrigerant system has been open to the atmosphere, it must be evacuated before the refrigerant system can be filled. Moisture and air mixed with the refrigerant system will raise the compressor head pressure above acceptable operating levels. This

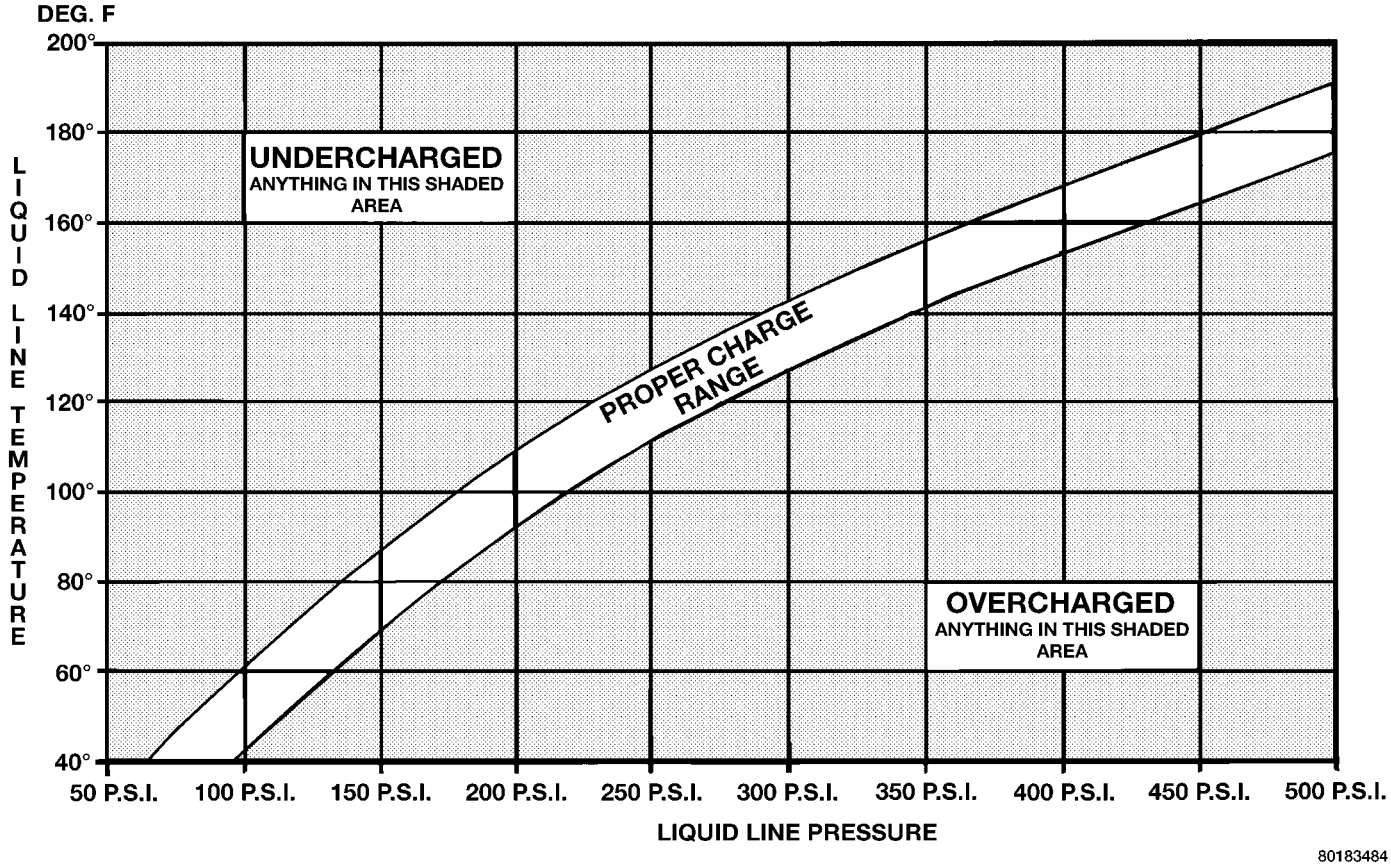

Fig. 3 Charge Determination Chart (Ambient Test Condition 85° F)

PLUMBING (Continued)

will reduce the performance of the A/C system and damage the A/C compressor. Moisture will boil at near room temperature when exposed to vacuum. A R-134a refrigerant recovery/recycling/charging station that meets SAE Standard J2210 must be used to evacuate the refrigerant system. See the operating instructions supplied by the equipment manufacturer for proper care and use of this equipment. To evacuate the refrigerant system, use the following procedure:

NOTE: When connecting the service equipment couplings to the refrigerant system service ports, be certain that the valve of each coupling is fully closed. This will reduce the amount of effort required to make the connection.

(1) Connect a suitable charging station, refrigerant recovery machine or a manifold gauge set with vacuum pump and refrigerant recovery equipment (Refer to 24 - HEATING & AIR CONDITIONING/PLUMBING - STANDARD PROCEDURE - REFRIGERANT SYSTEM SERVICE EQUIPMENT).

(2) Recover the refrigerant system (Refer to 24 - HEATING & AIR CONDITIONING/PLUMBING - STANDARD PROCEDURE - REFRIGERANT SYSTEM RECOVERY).

(3) Open the suction and discharge valves and start the vacuum pump. The vacuum pump should run a minimum of 45 minutes prior to charge to eliminate all moisture within the refrigerant system. When the suction gauge reads -88 kPa (-26 in. Hg) vacuum or greater for 30 minutes, close all valves and turn off vacuum pump. If the refrigerant system fails to reach the specified vacuum, the refrigerant system likely has a leak that must be corrected. If the refrigerant system maintains specified vacuum for at least 30 minutes, start the vacuum pump, open the suction and discharge valves. Then allow the system to evacuate an additional 10 minutes.

(4) Close all valves. Turn off and disconnect the vacuum pump.

(5) Charge the refrigerant system (Refer to 24 - HEATING & AIR CONDITIONING/PLUMBING - STANDARD PROCEDURE - REFRIGERANT SYSTEM CHARGE).

REFRIGERANT SYSTEM CHARGE

WARNING: Refer to the applicable warnings and cautions for this system before performing the following operation (Refer to 24 - HEATING & AIR CONDITIONING/PLUMBING - WARNINGS) and (Refer to 24 - HEATING & AIR CONDITIONING/PLUMBING - CAUTIONS). Failure to follow the warnings and cautions could result in possible personal injury or death.

NOTE: Always refer to the A/C Underhood Specification Label for the refrigerant fill capacity of the vehicle being serviced.

After all refrigerant system leaks have been repaired and the refrigerant system has been evacuated, a refrigerant charge can be injected into the system. For the proper amount of the refrigerant charge, always refer to the A/C Underhood Specification Label located in the engine compartment. An R-134a refrigerant recovery/recycling/charging station that meets SAE Standard J2210 must be used to charge the refrigerant system with R-134a refrigerant. See the operating instructions supplied by the equipment manufacturer for proper care and use of this equipment.

CHARGING PROCEDURE

CAUTION: A small amount of refrigerant oil is removed from the A/C system each time the refrigerant system is recovered and evacuated. Before charging the A/C system, you MUST replenish any oil lost during the recovery process. Refer the equipment manufacturer instructions for more information.

(1) Evacuate the refrigerant system (Refer to 24 - HEATING & AIR CONDITIONING/PLUMBING - STANDARD PROCEDURE - REFRIGERANT SYSTEM EVACUATE).

(2) A manifold gauge set and a R-134a refrigerant recovery/recycling/charging station that meets SAE standard J2210 should still be connected to the A/C refrigerant system.

(3) Measure the proper amount of R-134a refrigerant and heat it to 52° C (125° F) with the charging station. See the operating instructions supplied by the equipment manufacturer for proper use of this equipment.

(4) Open both the suction and discharge valves, then open the charge valve to allow the heated refrigerant to flow into the system.

(5) When the transfer of refrigerant has stopped, close both the suction and discharge valves.

(6) If all of the refrigerant charge did not transfer from the dispensing device, open all of the windows in the vehicle and set the A/C-heater controls so that the A/C compressor is engaged and the blower motor is operating at its lowest speed setting. Run the engine at a steady high idle (about 1400 rpm). If the A/C compressor will not engage, test the compressor clutch control circuit and repair as required.

(7) Open the suction valve to allow the remaining refrigerant to transfer to the refrigerant system.

PLUMBING (Continued)

WARNING: Take care not to open the discharge (high pressure) valve at this time.

(8) Close the suction valve and test the A/C system performance (Refer to 24 - HEATING & AIR CONDITIONING - STANDARD PROCEDURE - A/C PERFORMANCE TEST).

(9) Disconnect the charging station and manifold gauge set from the refrigerant system service ports.

(10) Install the protective caps onto the refrigerant system service ports.

A/C COMPRESSOR

DESCRIPTION

A/C COMPRESSOR

A/C systems on vehicles equipped with the 2.4L and 3.7L gasoline engines use a Sanden SD-7, reciprocating swash plate-type A/C compressor. This A/C compressor has a fixed displacement of 160 cubic centimeters (9.375 cubic inches) and includes an integral high pressure relief valve.

A/C systems on vehicles equipped with the 2.8L diesel engine use a Sanden PXF-18, reciprocating wobble plate-type A/C compressor. This A/C compressor has a fixed displacement of 150 cubic centimeters (9.763 cubic inches).

Both A/C compressors have the suction and discharge ports located on the compressor cylinder head and have a label identifying the use of R-134a refrigerant.

HIGH PRESSURE RELIEF VALVE

A high pressure relief valve is located on the cylinder head of the Sanden SD-7 A/C compressor, which is at the rear of the compressor. This mechanical valve is designed to vent refrigerant from the A/C system to protect against damage to the A/C compressor and other A/C system components, caused by condenser air flow restriction or an overcharge of refrigerant.

OPERATION

A/C COMPRESSOR

The A/C compressor is driven by the engine through an electric clutch, drive pulley and belt arrangement. The A/C compressor is lubricated by refrigerant oil that is circulated throughout the refrigerant system with the refrigerant.

The A/C compressor draws in low-pressure refrigerant vapor from the A/C evaporator through its suction port. It then compresses the refrigerant into a high-pressure, high-temperature refrigerant vapor, which is then pumped to the A/C condenser through the compressor discharge port.

The A/C compressor cannot be repaired and, if faulty or damaged, it must be replaced. The compressor clutch, pulley and bearing assembly, and clutch field coil are available for service.

HIGH PRESSURE RELIEF VALVE

The high pressure relief valve vents refrigerant from the A/C system when a discharge pressure of 3445 to 4135 kPa (500 to 600 psi) or above is reached. The high pressure relief valve closes with a minimum discharge pressure of 2756 kPa (400 psi) is reached.

The high pressure relief valve vents only enough refrigerant to reduce the A/C system pressure, and then re-seats itself. The majority of the refrigerant is conserved in the A/C system. If the high pressure relief valve vents refrigerant, it does not mean the valve is faulty.

The high pressure relief valve is factory-calibrated and cannot be adjusted or repaired, and must not be removed or otherwise disturbed. The valve is only serviced as a part of the A/C compressor.

DIAGNOSIS AND TESTING

A/C COMPRESSOR NOISE

When investigating an A/C system related noise, you must first know the conditions under which the noise occurs. These conditions include: weather, vehicle speed, transmission in gear or neutral, engine speed, engine temperature, and any other special conditions. Noises that develop during A/C operation can often be misleading. For example: What sounds like a failed front engine bearing or connecting rod, may be caused by loose bolts, nuts, mounting brackets or a loose compressor clutch assembly.

Drive belts are speed sensitive. At different engine speeds and depending upon drive belt tension, drive belts can develop noises that are mistaken for an A/C compressor noise. Improper drive belt tension can cause a misleading noise when the compressor clutch is engaged, which may not occur when the compressor clutch is disengaged. Check the accessory drive belt condition and tension as described in Cooling before beginning this procedure.

(1) Select a quiet area for testing. Duplicate the complaint conditions as much as possible. Switch the compressor on and off several times to clearly identify the compressor noise. Listen to the compressor while the clutch is engaged and disengaged. Probe the compressor with an engine stethoscope or a long

A/C COMPRESSOR (Continued)

screwdriver with the handle held to your ear to better localize the source of the noise.

(2) Loosen all of the compressor mounting hardware and retighten. Tighten the compressor clutch mounting nut. Be certain that the clutch coil is mounted securely to the compressor, and that the clutch plate and pulley are properly aligned and have the correct air gap (Refer to 24 - HEATING & AIR CONDITIONING/CONTROLS/A/C COMPRESSOR CLUTCH - INSTALLATION).

(3) To duplicate a high-ambient temperature condition (high head pressure), restrict the air flow through the condenser. Install a manifold gauge set to be certain that the discharge pressure does not exceed 2760 kPa (400 psi).

(4) Check the refrigerant system plumbing for incorrect routing, rubbing or interference, which can cause unusual noises. Also check the refrigerant lines for kinks or sharp bends that will restrict refrigerant flow, which can cause noises (Refer to 24 - HEATING & AIR CONDITIONING/PLUMBING - DESCRIPTION - REFRIGERANT LINES).

(5) If the noise is from opening and closing of the high pressure relief valve, recover, evacuate and recharge the refrigerant system (Refer to 24 - HEATING & AIR CONDITIONING/PLUMBING - STANDARD PROCEDURE - REFRIGERANT SYSTEM RECOVERY), (Refer to 24 - HEATING & AIR CONDITIONING/PLUMBING - STANDARD PROCEDURE - REFRIGERANT SYSTEM EVACUATE) and (Refer to 24 - HEATING & AIR CONDITIONING/PLUMBING - STANDARD PROCEDURE - REFRIGERANT SYSTEM CHARGE).

(6) If the noise is from liquid slugging on the suction line, replace the accumulator (Refer to 24 - HEATING & AIR CONDITIONING/PLUMBING/ACCUMULATOR - REMOVAL) and check the refrigerant oil level and the refrigerant system charge (Refer to 24 - HEATING & AIR CONDITIONING/PLUMBING/REFRIGERANT OIL - STANDARD PROCEDURE - REFRIGERANT SYSTEM OIL LEVEL).

(7) If the liquid slugging condition continues following accumulator replacement, replace the A/C compressor and repeat Step 1.

REMOVAL

WARNING: Refer to the applicable warnings and cautions for this system before performing the following operation (Refer to 24 - HEATING & AIR CONDITIONING/PLUMBING - WARNINGS) and (Refer to 24 - HEATING & AIR CONDITIONING/PLUMBING - CAUTIONS). Failure to follow the warnings and cautions could result in possible personal injury or death.

NOTE: The A/C compressor may be removed and repositioned without disconnecting the refrigerant lines or discharging the refrigerant system. Discharging is not necessary if servicing the A/C clutch, clutch field coil or the engine.

(1) Recover the refrigerant from the refrigerant system (Refer to 24 - HEATING & AIR CONDITIONING/PLUMBING - STANDARD PROCEDURE - REFRIGERANT RECOVERY).

(2) Disconnect and isolate the negative battery cable.

(3) Remove the accessory drive belt (Refer to 7 - COOLING/ACCESSORY DRIVE/DRIVE BELTS - REMOVAL).

(4) Disconnect the wire harness connector from the A/C clutch field coil.

(5) Depending on the engine usage, remove the bolts or nuts that secure the suction and discharge lines to the A/C compressor and remove and discard the O-ring seals.

(6) Install plugs in, or tape over all of the opened refrigerant line fittings and compressor ports.

(7) Remove the bolts or nuts that secure the A/C compressor to the engine (Fig. 4) or (Fig. 5) or (Fig. 6).

(8) Remove the A/C compressor from the engine compartment.

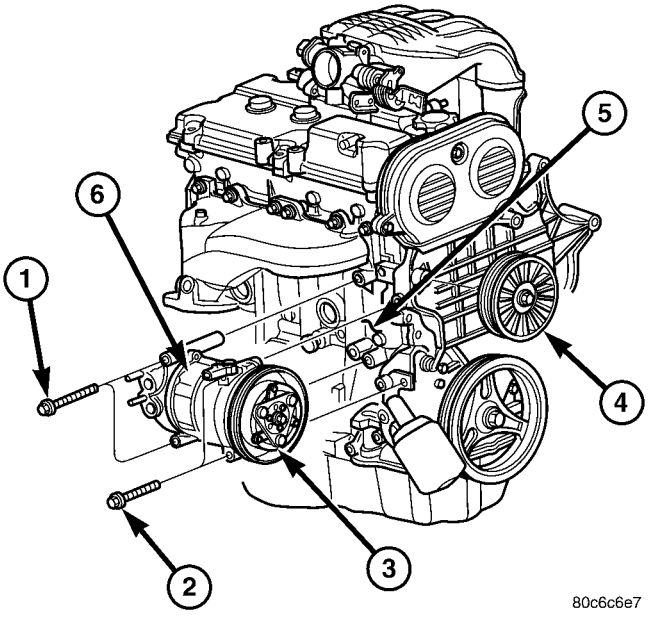

Fig. 4 A/C Compressor - 2.4L Engine

1 - COMPRESSOR BOLT
2 - COMPRESSOR BOLT
3 - COMPRESSOR CLUTCH AND PULLY
4 - IDLER PULLEY
5 - ENGINE BLOCK
6 - A/C COMPRESSOR

A/C COMPRESSOR (Continued)

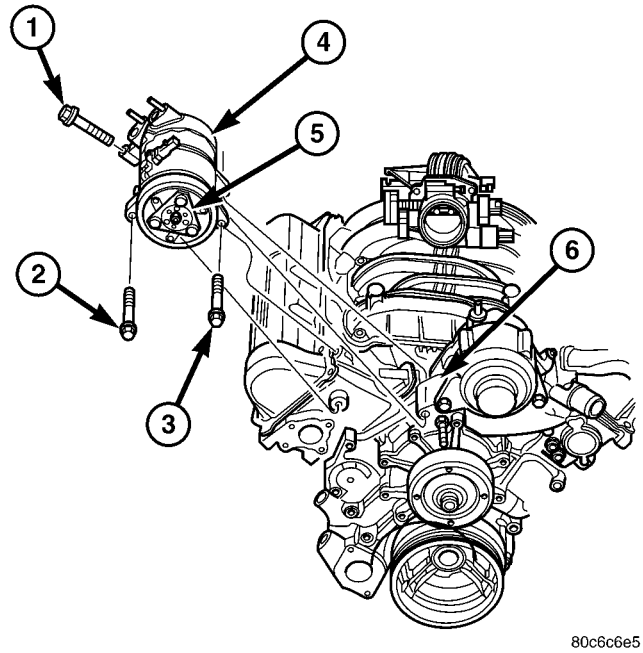

Fig. 5 A/C COMPRESSOR - 3.7L ENGINE

1 - COMPRESSOR BOLT #1
2 - COMPRESSOR BOLT #2
3 - COMPRESSOR BOLT #3
4 - A/C COMPRESSOR
5 - A/C COMPRESSOR CLUTCH AND PULLEY
6 - COMPRESSOR MOUNT

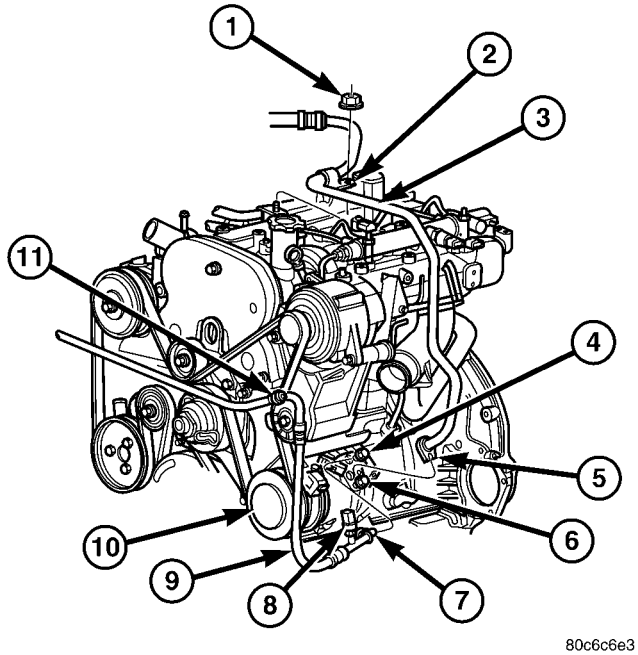

Fig. 6 A/C Compressor - 2.8L Diesel Engine

1 - NUT
2 - CLIP
3 - A/C SUCTION LINE
4 - SCREW
5 - MOUNTING FLANGE
6 - SCREW
7 - MOUNTING FLANGE
8 - A/C HIGH PRESSURE SWITCH
9 - A/C DISCHARGE LINE
10 - A/C COMPRESSOR
11 - SERVICE PORT

INSTALLATION

NOTE: If a replacement A/C compressor is being installed, be certain to check the refrigerant oil level. See Refrigerant Oil Level in this group for the procedures. Use only refrigerant oil of the type recommended for the A/C compressor in the vehicle.

(1) Position the A/C compressor into the engine compartment.

(2) On the 2.4L gasoline and 2.8L diesel engine, install and tighten the mounting bolts or nuts to 27 N·m (20 ft. lbs.).

(3) On the 3.7L gasoline engine install all mounting bolts hand tight, then tighten the mounting bolts in the following sequence:

- The rear bolt to 55 N·m (41 ft. lbs.).
- The front inboard bolt to 40 N·m (30 ft. lbs.).
- The front outboard bolt to 55 N·m (41 ft. lbs.).

(4) Remove the tape or plugs from the opened refrigerant line fittings and compressor ports.

(5) Lubricate new rubber O-ring seals with clean refrigerant oil and install them on the discharge and suction line fittings. Use only the specified O-rings as they are made of a special material for the R-134a system. Use only refrigerant oil of the type recommended for the A/C compressor in the vehicle.

(6) Install the suction and discharge lines onto the A/C compressor.

(7) Install the bolts or nuts (depending on engine application) that secure the suction and discharge lines to the A/C compressor. Tighten the bolts or nuts to 28 N·m (20 ft. lbs.).

(8) Connect the wire harness connector to the A/C clutch field coil.

(9) Install the accessory drive belt (Refer to 7 - COOLING/ACCESSORY DRIVE/DRIVE BELTS - INSTALLATION).

(10) Reconnect the negative battery cable.

(11) Evacuate the refrigerant system (Refer to 24 - HEATING & AIR CONDITIONING/PLUMBING - STANDARD PROCEDURE - REFRIGERANT SYSTEM EVACUATE).

(12) Charge the refrigerant system (Refer to 24 - HEATING & AIR CONDITIONING/PLUMBING - STANDARD PROCEDURE - REFRIGERANT SYSTEM CHARGE).

A/C CONDENSER

DESCRIPTION

The A/C condenser is located in the front of the engine compartment behind the grille (Fig. 7). The A/C condenser is a heat exchanger that allows the high-pressure refrigerant gas being discharged by the A/C compressor to give up its heat to the air passing over the condenser fins, which causes the refrigerant to cool and change to a liquid state.

The A/C condenser is equipped with mounting provisions and a tapping block for the A/C refrigerant lines.

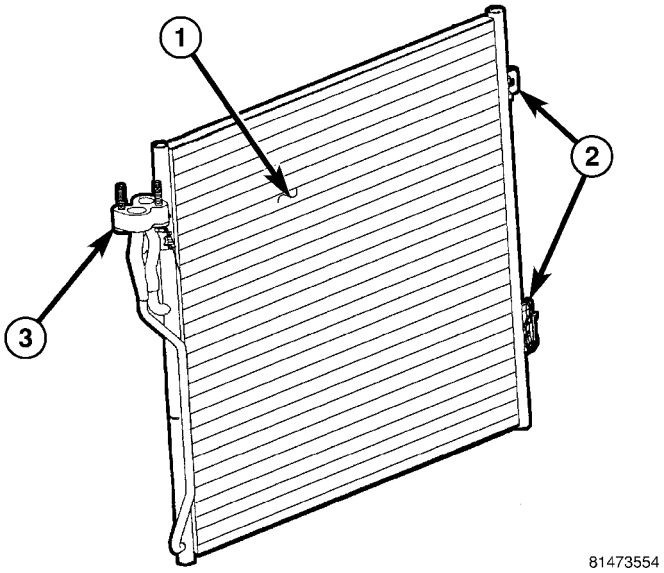

Fig. 7 A/C Condenser - Typical

1 - A/C CONDENSER
2 - MOUNTING BRACKETS
3 - REFRIGERANT LINE TAPPING BLOCK

OPERATION

When air passes through the fins of the A/C condenser, the high-pressure refrigerant gas within the A/C condenser gives up its heat. The refrigerant then condenses as it leaves the A/C condenser and becomes a high-pressure liquid. The volume of air flowing over the condenser fins is critical to the proper cooling performance of the A/C system. Therefore, it is important that there are no objects placed in front of the radiator grille openings at the front of the vehicle or foreign material on the condenser fins that might obstruct proper air flow. Also, any factory-installed air seals or shrouds must be properly reinstalled following radiator or A/C condenser service.

The A/C condenser cannot be repaired and, if faulty or damaged, it must be replaced.

REMOVAL

WARNING: Refer to the applicable warnings and cautions for this system before performing the following operation (Refer to 24 - HEATING & AIR CONDITIONING/PLUMBING - WARNINGS) and (Refer to 24 - HEATING & AIR CONDITIONING/PLUMBING - CAUTIONS). Failure to follow the warnings and cautions could result in possible personal injury or death.

CAUTION: Before removing the A/C condenser, note the location of each of the radiator/condenser air seals. These air seals are used to direct air through the A/C condenser and radiator. The air seals must be reinstalled in their proper locations in order for the A/C and engine cooling systems to perform as designed.

(1) Disconnect and isolate the negative battery cable.

(2) Recover the refrigerant from the refrigerant system (Refer to 24 - HEATING & AIR CONDITIONING/PLUMBING - STANDARD PROCEDURE - REFRIGERANT SYSTEM RECOVERY).

(3) Remove the nuts that secure the discharge and liquid lines to the condenser tapping block (Fig. 8).

(4) Disconnect the discharge and liquid lines from the A/C condenser and remove and discard the O-ring seals.

(5) Install plugs in, or tape over all of the opened refrigerant line fittings and condenser ports.

(6) Remove the upper radiator crossmember (Refer to 23 - BODY/EXTERIOR/RADIATOR CROSSMEMBER - REMOVAL).

(7) If equipped, remove the two bolts that secure the automatic transmission cooler to the radiator and position the transmission cooler aside.

(8) Remove the two bolts that secure the upper A/C condenser brackets to the radiator.

(9) Lift the A/C condenser straight up and disconnect the lower brackets from the radiator.

(10) Remove the A/C condenser from the engine compartment.

INSTALLATION

NOTE: If the A/C condenser is being replaced, add 30 milliliters (1 fluid ounce) of refrigerant oil to the refrigerant system. Use only refrigerant oil of the type recommended for the A/C compressor in the vehicle.

(1) Carefully position the A/C condenser into the engine compartment.

A/C CONDENSER (Continued)

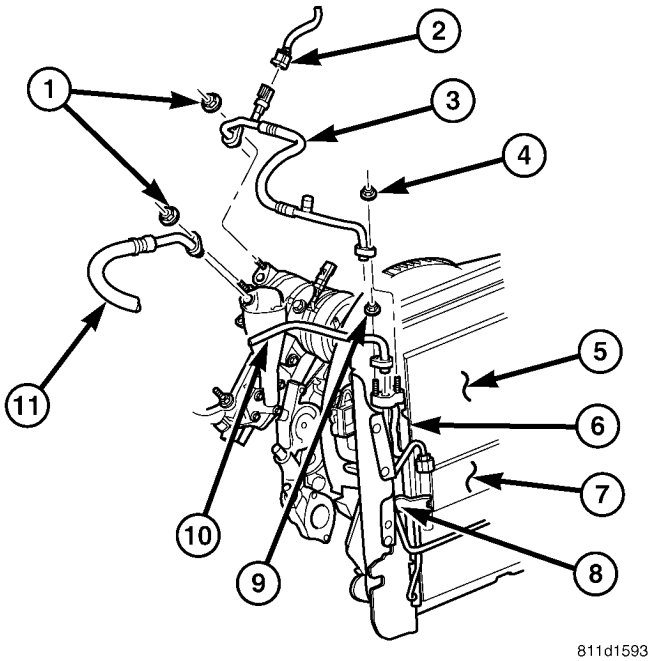

Fig. 8 A/C Condenser - Typical

1 - NUT (2)
2 - WIRE HARNESS CONNECTOR
3 - A/C DISCHARGE LINE
4 - NUT
5 - A/C CONDENSER
6 - BOLT (2)
7 - TRANSMISSION COOLER (IF EQUIPPED)
8 - BOLT (2)
9 - NUT
10 - LIQUID LINE
11 - SUCTION LINE

(2) Engage the lower condenser brackets to the radiator.

(3) Install the two bolts that secure the upper condenser brackets to the radiator. Tighten the bolts to 5 N·m (44 in. lbs.).

(4) If equipped, position the automatic transmission cooler to the radiator and install the two retaining bolts. Tighten the bolts to 5 N·m (44 in. lbs.).

(5) Install the upper radiator crossmember (Refer to 23 - BODY/EXTERIOR/RADIATOR CROSSMEMBER - INSTALLATION).

(6) Remove the tape or plugs from the discharge and liquid line fittings and condenser ports.

(7) Lubricate new rubber O-ring seals with clean refrigerant oil and install them on the discharge and liquid line fittings. Use only the specified O-rings as they are made of a special material for the R-134a system. Use only refrigerant oil of the type recommended for the A/C compressor in the vehicle.

(8) Install the discharge and liquid lines to the A/C condenser.

(9) Install the nuts that secure the discharge and liquid lines to the A/C condenser. Tighten the nuts to 12 N·m (105 in. lbs.).

(10) Reconnect the negative battery cable.

(11) Evacuate the refrigerant system (Refer to 24 - HEATING & AIR CONDITIONING/PLUMBING - STANDARD PROCEDURE - REFRIGERANT SYSTEM EVACUATE)

(12) Charge the refrigerant system (Refer to 24 - HEATING & AIR CONDITIONING/PLUMBING - STANDARD PROCEDURE - REFRIGERANT SYSTEM CHARGE).

A/C DISCHARGE LINE

DESCRIPTION

The A/C discharge line is the refrigerant line that carries refrigerant from the A/C compressor to the A/C condenser. The A/C discharge line includes the high-side service port.

The A/C discharge line on models equipped with the gasoline engines include a fitting for the A/C pressure transducer. For more information refer to 24 - HEATING & AIR CONDITIONING/CONTROLS/A/C PRESSURE TRANSDUCER - DESCRIPTION.

The A/C discharge line on models equipped with the diesel engines include a fitting for the A/C high pressure switch. For more information refer to 24 - HEATING & AIR CONDITIONING/CONTROLS/A/C HIGH PRESSURE SWITCH - DESCRIPTION.

CAUTION: Use only O-ring seals specified for the vehicle. Failure to use the correct O-ring seals will cause the refrigerant system connections to leak.

The A/C discharge line has no serviceable parts except for the O-ring seals and high-side service port valve and it's protective cap.

If the A/C discharge line is found to be leaking or is damaged, it must be replaced.

REMOVAL

WARNING: Refer to the applicable warnings and cautions for this system before performing the following operation (Refer to 24 - HEATING & AIR CONDITIONING/PLUMBING - WARNINGS) and (Refer to 24 - HEATING & AIR CONDITIONING/PLUMBING - CAUTIONS). Failure to follow the warnings and cautions could result in possible personal injury or death.

(1) Disconnect and isolate the negative battery cable.

(2) Recover the refrigerant from the refrigerant system (Refer to 24 - HEATING & AIR CONDITIONING/PLUMBING - STANDARD PROCEDURE - REFRIGERANT SYSTEM RECOVERY).

A/C DISCHARGE LINE (Continued)

(3) Disconnect the wire harness connector from the A/C pressure transducer (Fig. 9) or A/C high pressure switch (Fig. 10) or (Fig. 11), depending on application.

(4) Depending on engine application, remove the bolt or nut that secures the discharge line fitting to the A/C compressor.

(5) Disconnect the discharge line from the A/C compressor and remove and discard the O-ring seal.

(6) Install plug in, or tape over the opened discharge line fitting and the compressor port.

(7) Remove the nut that secures the discharge line to the A/C condenser.

(8) Disconnect the discharge line from the A/C condenser and remove and discard tyhe O-ring seal.

(9) Install plug in, or tape over the opened discharge line fitting and the condenser port.

(10) If equipped with the 2.8L diesel engine, remove the discharge line from the retaining clip located on the left side of the engine.

(11) Remove theA/C discharge line from the engine compartment.

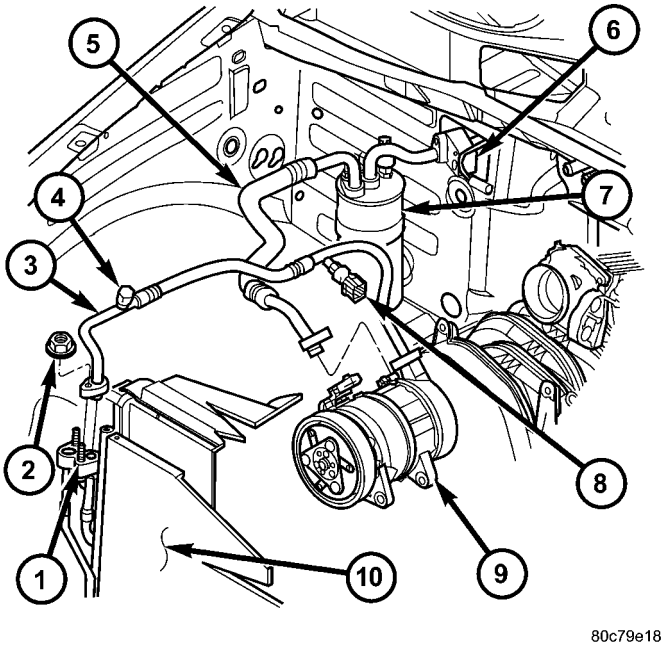

Fig. 9 A/C Discharge Line - 3.7L shown, 2.4L similar

1 - A/C CONDENSER INLET PORT
2 - NUT
3 - A/C DISCHARGE LINE
4 - SERVICE PORT
5 - SUCTION LINE
6 - EVAPORATOR TAPPING BLOCK
7 - A/C ACCUMULATOR
8 - A/C PRESSURE TRANSDUCER
9 - A/C COMPRESSOR
10 - A/C CONDENSER

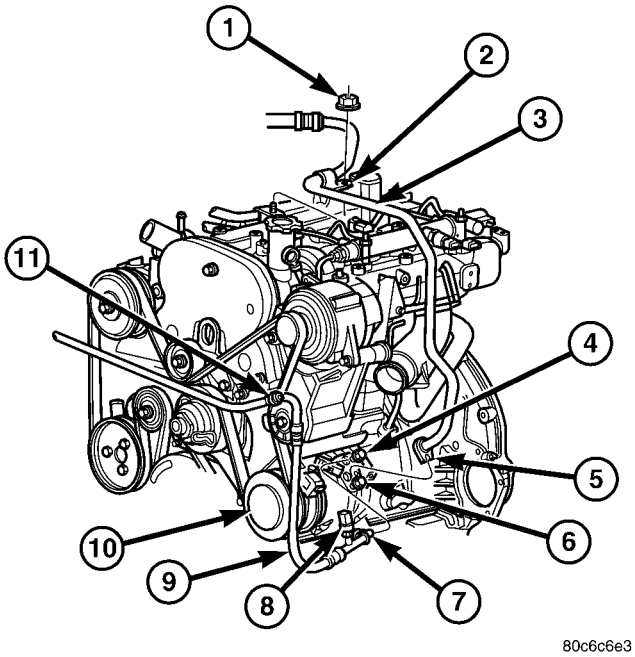

Fig. 10 A/C Discharge Line - LHD Diesel

1 - NUT
2 - CLIP
3 - A/C SUCTION LINE
4 - SCREW
5 - MOUNTING FLANGE
6 - SCREW
7 - MOUNTING FLANGE
8 - A/C HIGH PRESSURE SWITCH
9 - A/C DISCHARGE LINE
10 - A/C COMPRESSOR
11 - SERVICE PORT

INSTALLATION

NOTE: Replacement of the refrigerant line O-ring seals is required anytime a refrigerant line is opened. Failure to replace the rubber O-ring seals could result in a refrigerant system leak.

(1) Position the A/C discharge line into the engine compartment.

(2) If equipped with the 2.8L diesel engine, install the discharge line to the retaining clip located on the left side of the engine.

(3) Remove the tape or plugs from the condenser port and the discharge line fitting.

(4) Lubricate a new rubber O-ring seal with clean refrigerant oil and install it on the discharge line fitting. Use only the specified O-rings as they are made of a special material for the R-134a system. Use only refrigerant oil of the type recommended for the A/C compressor in the vehicle.

(5) Connect the discharge line to the A/C condenser.

A/C DISCHARGE LINE (Continued)

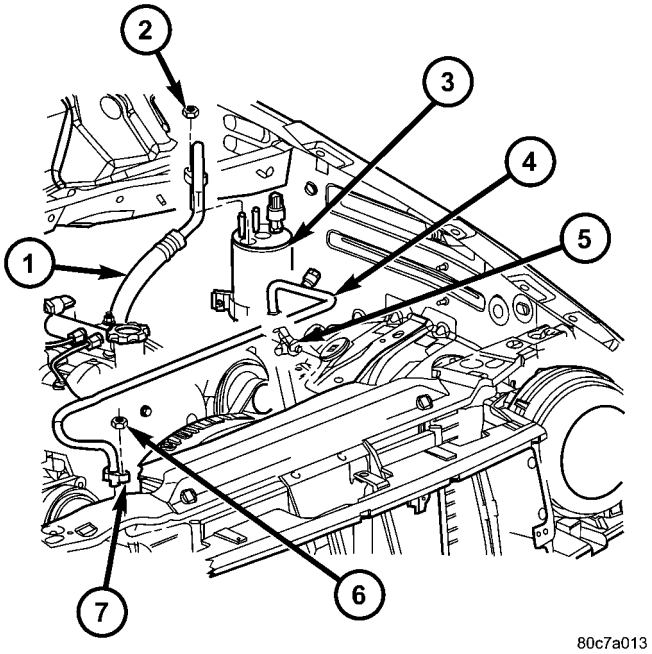

Fig. 11 A/C Discharge Line - RHD Diesel

1 - SUCTION LINE
2 - NUT
3 - ACCUMULATOR
4 - A/C DISCHARGE LINE
5 - RETAINING CLIP
6 - NUT
7 - DISCHARGE LINE TO CONDENSER FITTING

(6) Install the nut that secures the discharge line to the A/C condenser. Tighten the nut to 12 N·m (105 in. lbs.).

(7) Remove the tape or plugs from the compressor port and the discharge line fitting.

(8) Lubricate a new rubber O-ring seal with clean refrigerant oil and install it on the discharge line fitting. Use only the specified O-rings as they are made of a special material for the R-134a system. Use only refrigerant oil of the type recommended for the A/C compressor in the vehicle.

(9) Connect the discharge line to the A/C compressor.

(10) Install the bolt or nut (depending on engine application) that secures the discharge line to the A/C compressor. Tighten the bolt or nut to 28 N·m (20 ft. lbs.).

(11) Connect the wire harness connector to the A/C pressure transducer or A/C high pressure switch (depending on engine application).

(12) Reconnect the negative battery cable.

(13) Evacuate the refrigerant system (Refer to 24 - HEATING & AIR CONDITIONING/PLUMBING - STANDARD PROCEDURE - REFRIGERANT SYSTEM EVACUATE).

(14) Charge the refrigerant system (Refer to 24 - HEATING & AIR CONDITIONING/PLUMBING - STANDARD PROCEDURE - REFRIGERANT SYSTEM CHARGE).

A/C EVAPORATOR

DESCRIPTION

The A/C evaporator (Fig. 12) for the heating-A/C system is located within the HVAC housing, behind the instrument panel. The A/C evaporator is positioned in the HVAC housing so that all air entering the housing must pass over the evaporator fins before it is distributed through the heating-A/C system ducts and outlets. However, air passing over the evaporator fins will only be conditioned when the A/C compressor is engaged and circulating refrigerant through the A/C evaporator.

The A/C evaporator tubes are connected and sealed to the liquid and suction lines by use of rubber O-rings and a tapping block.

The A/C evaporator can only be serviced by removing and disassembling the HVAC housing.

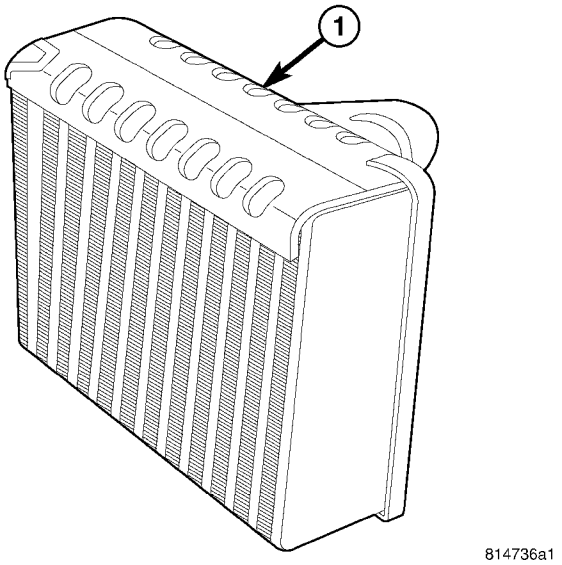

Fig. 12 A/C Evaporator - Typical

1 - A/C EVAPORATOR

OPERATION

Refrigerant enters the A/C evaporator from the A/C orifice tube as a low-temperature, low-pressure mixture of liquid and gas. As air flows over the fins of the A/C evaporator, the humidity in the air condenses on the fins, and the heat from the air is absorbed by the refrigerant. Heat absorption causes the refrigerant to boil and vaporize. The refrigerant becomes a low-pressure gas when it leaves the A/C evaporator.

The A/C evaporator cannot be repaired and, if faulty or damaged, it must be replaced.

A/C EVAPORATOR (Continued)

REMOVAL

(1) Remove the HVAC housing (Refer to 24 - HEATING & AIR CONDITIONING/DISTRIBUTION/ HVAC HOUSING - REMOVAL).

(2) Disassemble the HVAC housing as necessary to access the A/C evaporator (Refer to 24 - HEATING & AIR CONDITIONING/DISTRIBUTION/HVAC HOUSING - DISASSEMBLY).

(3) Carefully lift the A/C evaporator and foam insulator out of the lower half of the HVAC housing (Fig. 13).

(4) If required, remove the foam insulator and rubber grommet from the A/C evaporator. If the insulator is deformed or damaged, it must be replaced.

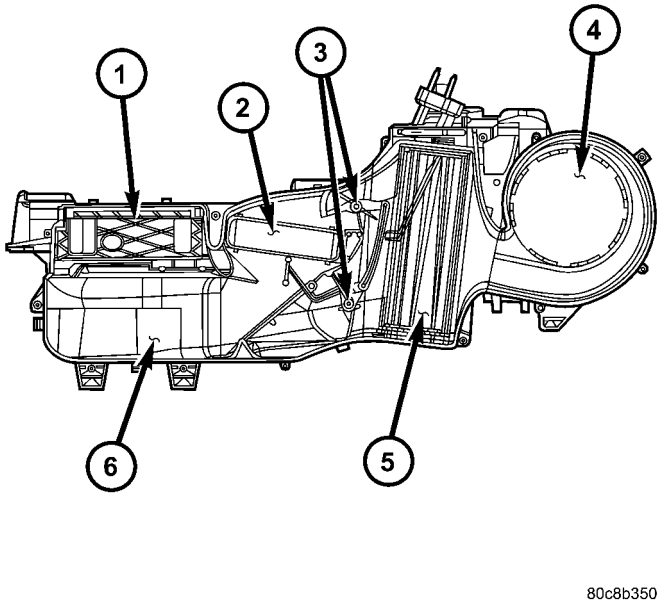

Fig. 13 A/C Evaporator - Typical

1 - FLOOR/DEFROSTER DOOR
2 - HEATER CORE
3 - BLEND DOORS
4 - BLOWER MOTOR HOUSING
5 - A/C EVAPORATOR (A/C SYSTEM ONLY)
6 - LOWER HVAC HOUSING

INSTALLATION

NOTE: If the A/C evaporator is being replaced, add 60 milliliters (2 fluid ounces) of refrigerant oil to the refrigerant system. Use only refrigerant oil of the type recommended for the A/C compressor in the vehicle.

(1) If removed, install the foam insulator over the A/C evaporator. If the insulator is deformed or damaged, it must be replaced.

(2) Install the A/C evaporator into the lower half of the HVAC housing. Make sure that the evaporator drain within the HVAC housing is clean and unrestricted and that the foam insulator and rubber grommet are properly installed.

(3) Assemble the HVAC housing (Refer to 24 - HEATING & AIR CONDITIONING/DISTRIBUTION/ HVAC HOUSING - ASSEMBLY).

(4) Install the HVAC housing (Refer to 24 - HEATING & AIR CONDITIONING/DISTRIBUTION/HVAC HOUSING - INSTALLATION).

A/C ORIFICE TUBE

DESCRIPTION

The fixed A/C orifice tube is installed in the section of the A/C liquid line closest to the A/C condenser and provides a restriction in the liquid refrigerant line between the A/C condenser and the A/C evaporator. This restriction established the pressure differential between the high and low-pressure sides of the A/C system.

The inlet end of the fixed A/C orifice tube has a nylon mesh filter screen, which filters the refrigerant and helps to reduce the potential for blockage of the metering orifice by refrigerant system contaminants (Fig. 14). The outlet end of the tube has a nylon mesh diffuser screen. The O-rings on the plastic body of the tube seal it to the inside of the liquid line and prevent the refrigerant from bypassing the fixed metering orifice.

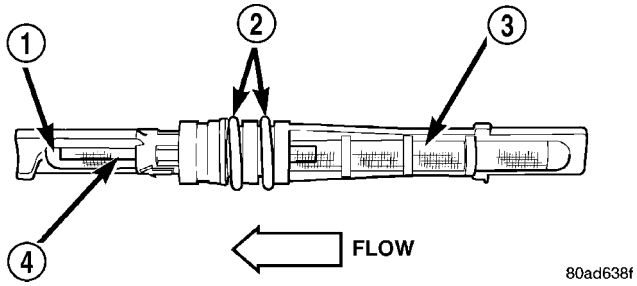

Fig. 14 Fixed A/C Orifice Tube - Typical

1 - DIFFUSER SCREEN
2 - O-RINGS
3 - INLET FILTER SCREENS
4 - ORIFICE

OPERATION

The fixed A/C orifice tube is used to meter the flow of liquid refrigerant into the A/C evaporator. The high-pressure liquid refrigerant from the A/C condenser expands into a low-pressure liquid as it passes through the metering orifice and diffuser screen of the A/C orifice tube.

The A/C orifice tube is not serviceable. It cannot be repaired, and if faulty or plugged, it must be replaced as part of the A/C liquid line (Refer to 24 - HEATING & AIR CONDITIONING/PLUMBING/LIQUID LINE - REMOVAL).

A/C ORIFICE TUBE (Continued)

DIAGNOSIS AND TESTING

A/C ORIFICE TUBE

WARNING: The A/C liquid line between the A/C condenser and the A/C orifice tube can become hot enough to burn the skin. Use extreme caution when performing the following test to prevent possible personal injury.

NOTE: The A/C orifice tube can be checked for proper operation using the following procedure. However, the A/C orifice tube is only serviced as a part of the A/C liquid line. If the results of this test indicate that the A/C orifice tube is obstructed or missing, the A/C liquid line must be replaced.

(1) Confirm that the refrigerant system is properly charged (Refer to 24 - HEATING & AIR CONDITIONING - DIAGNOSIS AND TESTING - A/C PERFORMANCE TEST).

(2) Start the engine. Turn on the A/C system and confirm that the compressor clutch is engaged.

(3) Allow the A/C system to operate for five minutes.

(4) Lightly and cautiously touch the A/C liquid line near the condenser outlet at the front of the engine compartment. The liquid line should be hot to the touch.

(5) Touch the A/C liquid line near the evaporator inlet at the rear of the engine compartment. The liquid line should be cold to the touch.

(6) If there is a distinct temperature differential between the two ends of the A/C liquid line, the A/C orifice tube is in good condition. If there is little or no detectable temperature differential between the two ends of the A/C liquid line, the A/C orifice tube is obstructed or missing and the A/C liquid line must be replaced (Refer to 24 - HEATING & AIR CONDITIONING/PLUMBING/A/C LIQUID LINE - REMOVAL).

ACCUMULATOR

DESCRIPTION

The A/C accumulator (Fig. 15) is mounted in the engine compartment between the A/C evaporator and the A/C compressor. An integral mounting bracket is used to secure the A/C accumulator to the right side frame rail. The A/C low pressure switch is mounted on a fitting located on the top of the A/C accumulator.

The A/C accumulator cannot be repaired and, if faulty or damaged, it must be replaced. The rubber O-rings used on accumulator connections and the A/C low pressure switch are available for service replacement.

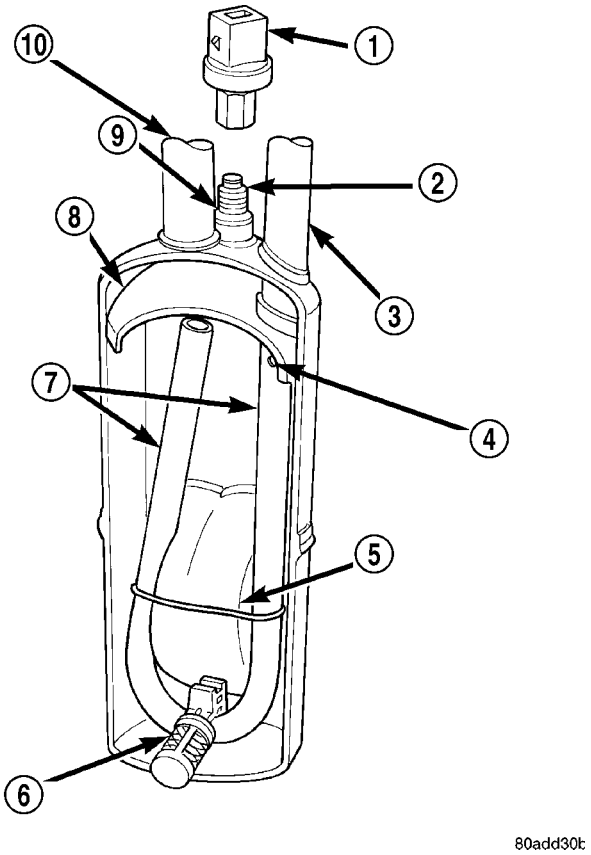

Fig. 15 Accumulator - Typical

1 - A/C LOW PRESSURE SWITCH
2 - PRESSURE SWITCH FITTING
3 - OUTLET TO COMPRESSOR
4 - ANTI-SIPHON HOLE
5 - DESICCANT BAG
6 - OIL RETURN ORIFICE FILTER
7 - VAPOR RETURN TUBE
8 - ACCUMULATOR DOME
9 - O-RING SEAL
10 - INLET FROM EVAPORATOR

OPERATION

Refrigerant enters the A/C accumulator mostly as a low pressure vapor through the inlet tube. Any liquid, oil-laden refrigerant falls to the bottom of the canister, which acts as a separator. A desiccant bag is mounted inside the accumulator canister to absorb any moisture which may have entered and become trapped within the refrigerant system A filter is also mounted inside the canister to trap any foreign material that may have entered the refrigerant system during assembly. The low pressure vapor exits the A/C accumulator through the outlet tube.

The A/C accumulator cannot be repaired. If the A/C accumulator is faulty or damaged, or if the refrigerant system has been contaminated or left open to the atmosphere for an indeterminable period or if the A/C compressor has failed, it must be replaced.

ACCUMULATOR (Continued)

REMOVAL

WARNING: Refer to the applicable warnings and cautions for this system before performing the following operation (Refer to 24 - HEATING & AIR CONDITIONING/PLUMBING - WARNINGS) and (Refer to 24 - HEATING & AIR CONDITIONING/PLUMBING - CAUTIONS). Failure to follow the warnings and cautions could result in possible personal injury or death.

(1) Disconnect and isolate the negative battery cable.

(2) Recover the refrigerant from the refrigerant system (Refer to 24 - HEATING & AIR CONDITIONING/PLUMBING - STANDARD PROCEDURE - REFRIGERANT SYSTEM RECOVERY).

(3) Disconnect the wire harness connector from the A/C low pressure switch.

(4) If required, remove the A/C low pressure switch from the accumulator and remove and discard the O-ring seal.

(5) Loosen the bolt that secures the accumulator retaining band to the support bracket located on the dash panel (Fig. 16).

(6) Remove the nuts that secure the refrigerant lines to the accumulator.

(7) Disconnect the refrigerant lines from the accumulator and remove and discard the O-ring seals.

(8) Install plugs in, or tape over the opened refrigerant line fittings and accumulator ports.

(9) Pull the accumulator and retaining band forward until the bolt in the band is clear of the slotted hole in the support bracket.

(10) Remove the accumulator from the engine compartment and if necessary, remove the retaining band from the accumulator.

INSTALLATION

NOTE: If the A/C accumulator is being replaced, add 120 milliliters (4 fluid ounces) of refrigerant oil to the refrigerant system. Use only refrigerant oil of the type recommended for the A/C compressor in the vehicle.

(1) If removed, position the accumulator into the retaining band and loosely install the bolt.

(2) Position the accumulator and retaining band into the slotted hole of the support bracket on the dash panel.

(3) Remove the tape or plugs from the opened refrigerant line fittings and the accumulator ports.

(4) Lubricate new rubber O-ring seals with clean refrigerant oil and install them on the refrigerant line fittings. Use only the specified O-rings as they are made of a special material for the R-134a system.

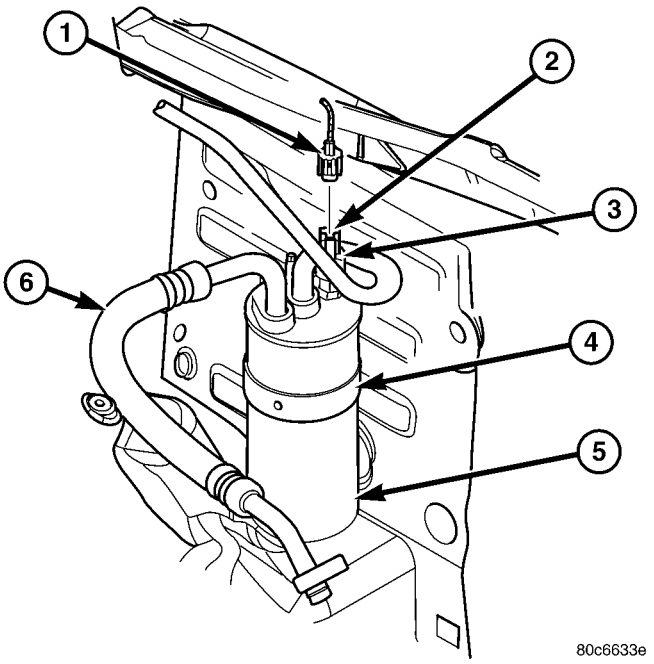

Fig. 16 Accumulator - Typical

1 - WIRING HARNESS CONNECTOR
2 - A/C LOW PRESSURE SWITCH
3 - EVAPORATOR TAPPING BLOCK
4 - MOUNTING BRACKET
5 - ACCUMULATOR
6 - SUCTION LINE

Use only refrigerant oil of the type recommended for the A/C compressor in the vehicle.

(5) Connect the refrigerant lines to the accumulator.

(6) Install the nuts that secure the refrigerant lines to the accumulator. Tighten the nuts to 9 N·m (80 in. lbs.).

(7) Tighten the bolt that secures the accumulator retaining band to the support bracket. Tighten the bolt to 4.5 N·m (40 in. lbs.).

(8) If removed, install the A/C low pressure switch onto the accumulator using a new O-ring seal. Hand-tighten the switch securely.

(9) Connect the wire harness connector to the A/C low pressure switch.

(10) Reconnect the negative battery cable.

(11) Evacuate the refrigerant system (Refer to 24 - HEATING & AIR CONDITIONING/PLUMBING - STANDARD PROCEDURE - REFRIGERANT SYSTEM EVACUATE).

(12) Charge the refrigerant system (Refer to 24 - HEATING & AIR CONDITIONING/PLUMBING - STANDARD PROCEDURE - REFRIGERANT SYSTEM CHARGE).

HEATER CORE

DESCRIPTION

The heater core (Fig. 17) is mounted in the HVAC housing, located behind the instrument panel. The heater core is a heat exchanger made of rows of tubes and fins. The heater core inlet and outlet tubes are integral to the heater core and cannot be serviced separately.

The heater core can be serviced by removing the HVAC housing from the vehicle.

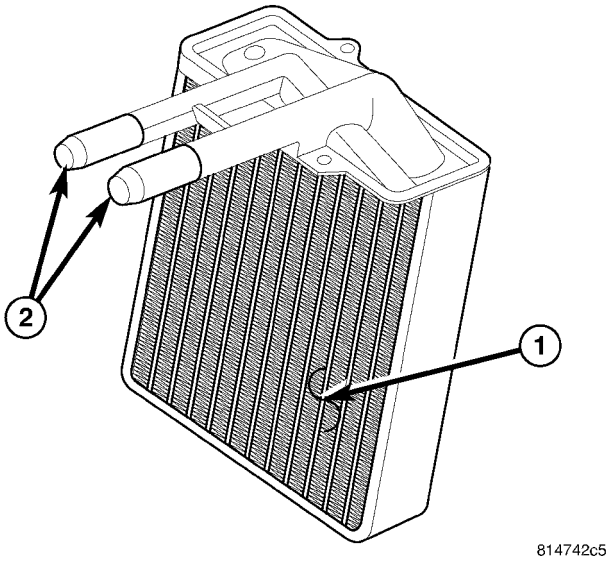

Fig. 17 Heater Core - Typical

1 - HEATER CORE
2 - INLET AND OUTLET TUBES

OPERATION

Engine coolant is circulated through the heater hoses and heater core at all times. As the coolant flows through the heater core, heat removed from the engine is transferred to the heater core fins and tubes. Air directed through the heater core picks up the heat from the heater core fins. The blend door allows control of the heater output air temperature by regulating the amount of air that is flowing through the heater core within the HVAC housing. The blower motor speed controls the volume of air flowing through the HVAC housing.

The heater core cannot be repaired and, if faulty or damaged, it must be replaced.

REMOVAL

WARNING: On vehicles equipped with airbags, disable the airbag system before attempting any steering wheel, steering column, or instrument panel component diagnosis or service. Disconnect and isolate the negative battery (ground) cable, then wait two minutes for the airbag system capacitor to discharge before performing further diagnosis or service. This is the only sure way to disable the airbag system. Failure to take the proper precautions could result in accidental airbag deployment and possible personal injury or death.

WARNING: Refer to the applicable warnings and cautions for this system before performing the following operation (Refer to 24 - HEATING & AIR CONDITIONING/PLUMBING - WARNINGS) and (Refer to 24 - HEATING & AIR CONDITIONING/PLUMBING - CAUTIONS). Failure to follow the warnings and cautions could result in possible personal injury or death.

(1) Remove the HVAC housing (Refer to 24 - HEATING & AIR CONDITIONING/DISTRIBUTION/ HVAC HOUSING - REMOVAL).

(2) If equipped, remove the two screws that secure the heater core in the HVAC housing (Fig. 18).

(3) Gently push back on the two heater core retaining tabs and remove the heater core from the HVAC housing.

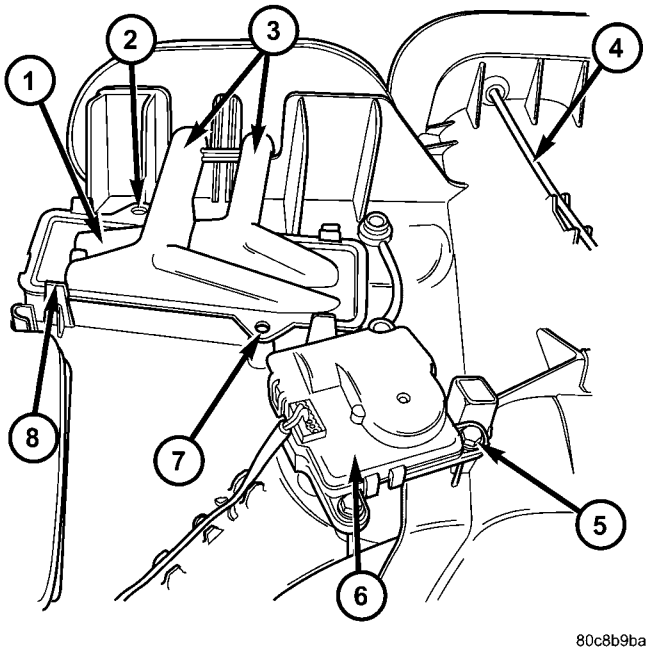

Fig. 18 Heater Core

1 - HEATER CORE
2 - SCREW
3 - INLET AND OUTLET TUBES
4 - VACUUM HARNESS
5 - SCREW (3)
6 - BLEND DOOR ACTUATOR
7 - SCREW
8 - HEATER CORE RETAINER TAB (4)

HEATER CORE (Continued)

INSTALLATION

(1) Position the heater core into the HVAC housing.

(2) Push the top of the heater core down until the retaining tabs lock the heater core into place.

(3) If equipped, install the two screws that secure the heater core to the HVAC housing. Tighten the screws to 2 N·m (17 in. lbs.).

NOTE: If the heater core is being replaced, flush the cooling system (Refer to 7 - COOLING - STANDARD PROCEDURE - COOLING SYSTEM CLEANING/REVERSE FLUSHING).

(4) Install the HVAC housing (Refer to 24 - HEATING & AIR CONDITIONING/DISTRIBUTION/HVAC HOUSING - INSTALLATION).

LIQUID LINE

DESCRIPTION

The A/C liquid line is the refrigerant line that carries refrigerant from the A/C condenser to the A/C evaporator. The A/C liquid is serviced in one section and contains the fixed A/C orifice tube and the low-side service port.

CAUTION: Use only O-ring seals specified for the vehicle. Failure to use the correct O-ring seals will cause the refrigerant system connections to leak.

The A/C liquid line has no serviceable parts except for the O-ring seals and low-side service port valve and it's protective cap.

If the A/C liquid line is found to be leaking or damaged, it must be replaced.

REMOVAL

WARNING: Refer to the applicable warnings and cautions for this system before performing the following operation (Refer to 24 - HEATING & AIR CONDITIONING/PLUMBING - WARNINGS) and (Refer to 24 - HEATING & AIR CONDITIONING/PLUMBING - CAUTIONS). Failure to follow the warnings and cautions could result in possible personal injury or death.

(1) Disconnect and isolate the negative battery cable.

(2) Recover the refrigerant from the refrigerant system (Refer to 24 - HEATING & AIR CONDITIONING/PLUMBING - STANDARD PROCEDURE - REFRIGERANT SYSTEM RECOVERY).

(3) Remove the engine air cleaner housing (Refer to 9 - ENGINE/AIR INTAKE SYSTEM/AIR CLEANER HOUSING - REMOVAL).

(4) Remove the nut that secures the liquid line to the A/C condenser (Fig. 19).

(5) Disconnect the liquid line from the A/C condenser and remove and discard the O-ring seal.

(6) Install plugs in, or tape over the opened liquid line fitting and the condenser port.

(7) Remove the liquid line from the retaining clips located on the inner fender.

(8) Remove the nut that secures the liquid line to the A/C evaporator.

(9) Disconnect the liquid line from the A/C evaporator and remove and discard the O-ring seal.

(10) Install plugs in, or tape over the opened liquid line fitting and the evaporator port.

(11) Remove the liquid line from the engine compartment.

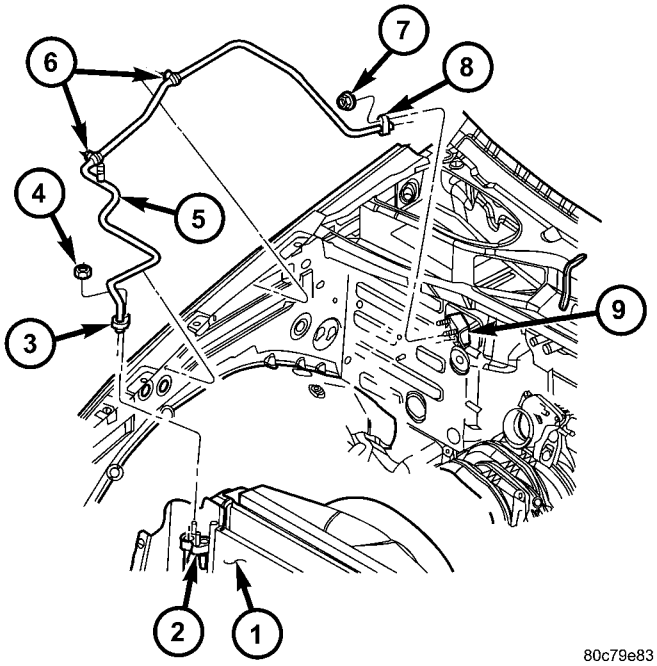

Fig. 19 Liquid Line - Typical

1 - AC CONDENSER
2 - CONDENSER TAPPING BLOCK
3 - LIQUID LINE TO CONDENSER FITTING
4 - NUT
5 - LIQUID LINE
6 - LIQUID LINE RETAINING CLIP (2)
7 - NUT
8 - LIQUID LINE TO EVAPORATOR FITTING
9 - EVAPORATOR TAPPING BLOCK

LIQUID LINE (Continued)

INSTALLATION

NOTE: Replacement of the refrigerant line O-ring seals is required anytime a refrigerant line is opened. Failure to replace the rubber O-ring seals could result in a refrigerant system leak.

(1) Position the liquid line into the engine compartment.

(2) Remove the tape or plugs from the liquid line fitting and the condenser port.

(3) Lubricate a new rubber O-ring seal with clean refrigerant oil and install it on the liquid line fitting. Use only the specified O-rings as they are made of a special material for the R-134a system. Use only refrigerant oil of the type recommended for the A/C compressor in the vehicle.

(4) Connect the liquid line to the A/C condenser.

(5) Install the nut that secures the liquid line to the A/C condenser. Tighten the nut to 12 N·m (105 in. lbs.).

(6) Install the liquid line into the plastic retaining clips located on the inner fender.

(7) Remove the tape or plugs from the liquid line fitting and the evaporator port.

(8) Lubricate a new rubber O-ring seal with clean refrigerant oil and install it on the liquid line fitting. Use only the specified O-ring as it is made of a special material for the R-134a system. Use only the specified O-rings as they are made of a special material for the R-134a system. Use only refrigerant oil of the type recommended for the A/C compressor in the vehicle.

(9) Connect the liquid line to the evaporator port.

(10) Install the nut that secures the liquid line to the A/C evaporator. Tighten the nut to 23 N·m (17 ft. lbs.).

(11) Install the engine air cleaner housing (Refer to 9 - ENGINE/AIR INTAKE SYSTEM/AIR CLEANER HOUSING - INSTALLATION).

(12) Reconnect the negative battery cable.

(13) Evacuate the refrigerant system (Refer to 24 - HEATING & AIR CONDITIONING/PLUMBING - STANDARD PROCEDURE - REFRIGERANT SYSTEM EVACUATE).

(14) Charge the refrigerant system (Refer to 24 - HEATING & AIR CONDITIONING/PLUMBING - STANDARD PROCEDURE - REFRIGERANT SYSTEM CHARGE).

REFRIGERANT

DESCRIPTION

The refrigerant used in this air conditioning system is a HydroFluoroCarbon (HFC), type R-134a. Unlike R-12, which is a ChloroFluoroCarbon (CFC), R-134a refrigerant does not contain ozone-depleting chlorine. R-134a refrigerant is a non-toxic, non-flammable, clear, and colorless liquefied gas.

Even though R-134a does not contain chlorine, it must be reclaimed and recycled just like CFC-type refrigerants. This is because R-134a is a greenhouse gas and can contribute to global warming.

OPERATION

R-134a refrigerant is not compatible with R-12 refrigerant in an air conditioning system. Even a small amount of R-12 added to an R-134a refrigerant system will cause compressor failure, refrigerant oil sludge or poor air conditioning system performance. In addition, the PolyAlkylene Glycol (PAG) synthetic refrigerant oils used in an R-134a refrigerant system are not compatible with the mineral-based refrigerant oils used in an R-12 refrigerant system.

R-134a refrigerant system service ports, service tool couplers and refrigerant dispensing bottles have all been designed with unique fittings to ensure that an R-134a refrigerant system is not accidentally contaminated with the wrong refrigerant (R-12). There are also labels posted in the engine compartment of the vehicle and on the A/C compressor to identify that the A/C system is equipped with R-134a refrigerant.

REFRIGERANT OIL

DESCRIPTION

The refrigerant oil used in R-134a refrigerant systems is a synthetic-based, PolyAlkylene Glycol (PAG), wax-free lubricant. Mineral-based R-12 refrigerant oils are not compatible with PAG oils, and should never be introduced to an R-134a refrigerant system.

There are different PAG oils available, and each contains a different additive package. The A/C compressors used in this vehicle are designed to use an SP-15 PAG refrigerant oil. Use only this type of refrigerant oil the refrigerant system.

OPERATION

After performing any refrigerant recovery or recycling operation, always replenish the refrigerant system with the same amount of the recommended refrigerant oil as was removed. Too little refrigerant oil can cause A/C compressor damage, and too much can reduce A/C system performance.

PAG refrigerant oil is more hygroscopic than mineral oil, and will absorb any moisture it comes into contact with, even moisture in the air. The PAG oil container should always be kept tightly capped until it is ready to be used. After use, recap the oil con-

REFRIGERANT OIL (Continued)

tainer immediately to prevent moisture contamination.

STANDARD PROCEDURE

REFRIGERANT OIL LEVEL

WARNING: Review safety precautions and warnings in this group before performing this procedure (Refer to 24 - HEATING & AIR CONDITIONING/ PLUMBING - WARNINGS) and (Refer to 24 - HEATING & AIR CONDITIONING/PLUMBING - CAUTIONS). Failure to follow the warnings and cautions could result in possible personal injury or death.

CAUTION: The oil used in the A/C compressor is SP-15 PAG R-134a refrigerant oil. Only refrigerant oil of the same type should be used to service the A/C system. Do not use any other refrigerant oil. The oil container should be kept tightly capped until it is ready for use and then tightly capped after use to prevent contamination from dirt and moisture. Refrigerant oil will quickly absorb any moisture it comes in contact with, therefore, special effort must be used to keep all R-134a system components moisture-free. Moisture in the refrigerant oil is very difficult to remove and will cause a reliability problem with the A/C compressor.

NOTE: Most reclaim/recycling equipment will measure the lubricant being removed during recovery. This amount of lubricant should be added back into the system. Refer to the reclaim/recycling equipment manufacturers instructions.

It will not be necessary to check the oil level in the A/C compressor or to add oil, unless there has been an oil loss. An oil loss may occur due to a rupture or leak from a refrigerant line, a connector fitting, a component, or a component seal. If a leak occurs, add 30 milliliters (1 fluid ounce) of refrigerant oil to the refrigerant system after the repair has been made. Refrigerant oil loss will be evident at the leak point by the presence of a wet, shiny surface around the leak.

Refrigerant oil must be added when a receiver/ drier, A/C evaporator or A/C condenser is replaced. See the Refrigerant Oil Capacities chart. When an A/C compressor is replaced, the refrigerant oil must be drained from the old compressor and measured. Drain all of the refrigerant oil from the new A/C compressor, then fill the new compressor with the same amount of refrigerant oil that was drained out of the old compressor.

REFRIGERANT OIL CAPACITIES

Component	ml	oz
Total System Fill	240	8
A/C Accumulator	120	4
A/C Condenser	30	1
A/C Evaporator	60	2
A/C Compressor	Drain and measure the oil from the old compressor as noted	

SERVICE PORT VALVE CORE

DESCRIPTION

Refrigerant system service ports are used to recover, recycle, evacuate, charge and test the A/C refrigerant system (Fig. 20). Unique sizes are used on the two service ports for the R-134a refrigerant system to ensure the system is not accidentally contaminated with R-12 refrigerant or by service equipment used for R-12 refrigerant.

The high-side service port is located on the A/C discharge line near the A/C condenser. The low-side service port is located on the A/C liquid line near the air filter housing. Both the high-side and low-side A/C service port valve cores are serviceable.

NOTE: The protective cap aids in service port sealing and helps protects the refrigerant system from contamination. Remember to always reinstall the protective cap onto the service port when refrigerant system service is complete.

Each of the service ports has a threaded plastic protective cap installed over it from the factory. The service port caps are serviceable items.

REMOVAL

WARNING: Refer to the applicable warnings and cautions for this system before performing the following operation (Refer to 24 - HEATING & AIR CONDITIONING/PLUMBING - WARNINGS) and (Refer to 24 - HEATING & AIR CONDITIONING/PLUMBING - CAUTIONS). Failure to follow the warnings and cautions could result in possible personal injury or death.

SERVICE PORT VALVE CORE (Continued)

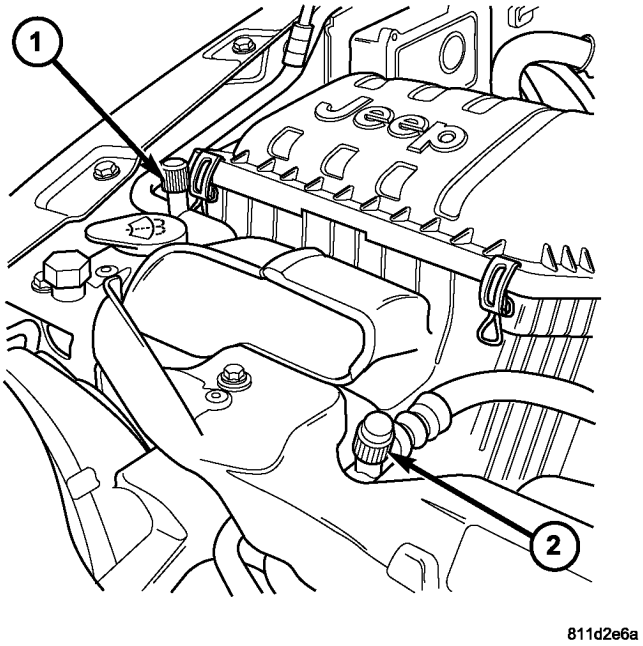

Fig. 20 A/C Service Ports

1 - LOW-SIDE SERVICE PORT
2 - HIGH-SIDE SERVICE PORT

(1) Remove the protective cap from the service port (Fig. 21).

(2) Recover the refrigerant from the refrigerant system (Refer to 24 - HEATING & AIR CONDITIONING/PLUMBING - STANDARD PROCEDURE - REFRIGERANT SYSTEM RECOVERY).

(3) Using a Schrader-type valve core tool, remove the valve core from the service port.

(4) Install a plug in or tape over the opened service port(s).

INSTALLATION

(1) Lubricate the valve core with clean refrigerant oil prior to installation. Use only refrigerant oil of the type recommended for the A/C compressor in the vehicle.

(2) Remove the tape or plug from the service port.

CAUTION: A valve core that is not fully seated in the A/C service port can result in damage to the valve during refrigerant system evacuation and charge. Such damage may result in a loss of system refrigerant while uncoupling the charge adapters.

(3) Using a Schrader-type valve core tool, install and tighten the valve core into the service port(s).

(4) Evacuate the refrigerant system (Refer to 24 - HEATING & AIR CONDITIONING/PLUMBING - STANDARD PROCEDURE - REFRIGERANT SYSTEM EVACUATE).

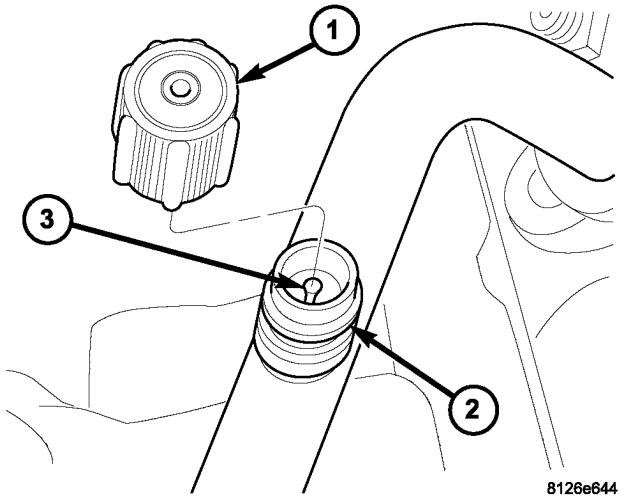

Fig. 21 A/C Service Port-Typical

1 - PROTECTIVE CAP
2 - SERVICE PORT
3 - VALVE CORE

(5) Charge the refrigerant system (Refer to 24 - HEATING & AIR CONDITIONING/PLUMBING - STANDARD PROCEDURE - REFRIGERANT SYSTEM CHARGE).

NOTE: The protective cap helps aid in service port sealing and helps protects the refrigerant system from contamination. Remember to always reinstall the protective cap onto the service port when refrigerant system service is complete.

(6) Install the protective cap onto the service port.

SUCTION LINE

DESCRIPTION

The A/C suction line is the refrigerant line that goes from the A/C evaporator to the A/C accumulator, then to the A/C compressor. The A/C suction line is serviced in two sections.

CAUTION: Use only O-ring seals specified for the vehicle. Failure to use the correct O-ring seal will cause the refrigerant system connections to leak.

The A/C suction lines have no serviceable parts except for the rubber O-ring seals.

If an A/C suction line is found to be leaking or is damaged, it must be replaced.

SUCTION LINE (Continued)

REMOVAL

WARNING: Refer to the applicable warnings and cautions for this system before performing the following operation (Refer to 24 - HEATING & AIR CONDITIONING/PLUMBING - WARNINGS) and (Refer to 24 - HEATING & AIR CONDITIONING/PLUMBING - CAUTIONS). Failure to follow the warnings and cautions could result in possible personal injury or death.

(1) Disconnect and isolate the negative battery cable.

(2) Recover the refrigerant from the refrigerant system (Refer to 24 - HEATING & AIR CONDITIONING/PLUMBING - STANDARD PROCEDURE - REFRIGERANT SYSTEM RECOVERY).

(3) If required, remove the bolt or nut (depending on engine application) that secures the A/C suction line to the A/C compressor (Fig. 22) or (Fig. 23).

(4) If required, remove the nut that secures the A/C suction line to the A/C evaporator.

(5) Remove the nuts that secures the A/C suction line to the A/C accumulator, as required.

(6) Disconnect the A/C suction line from the A/C evaporator, A/C accumulator and A/C compressor, as required and remove and discard the O-ring seals.

(7) Install plugs in, or tape over the opened suction line fittings and the accumulator, compressor and evaporator ports as required.

(8) Remove the A/C suction line(s) from the engine compartment as required.

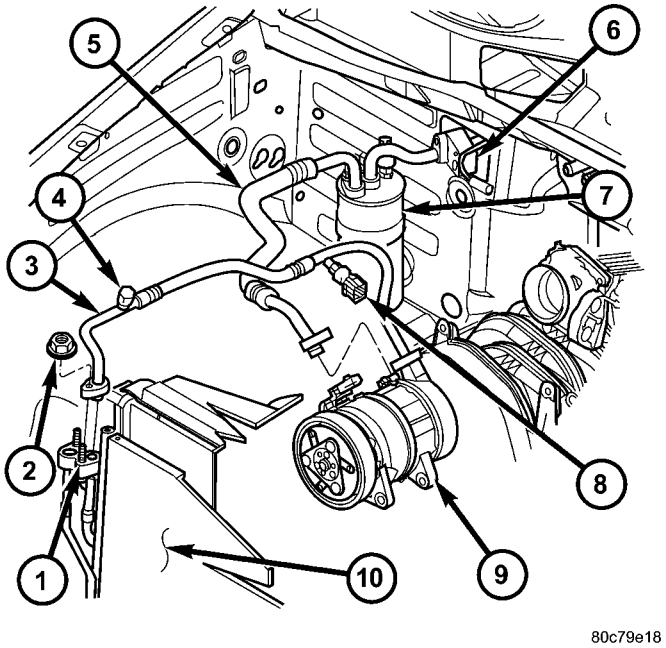

Fig. 22 A/C Suction Line - Typical LHD

1 - A/C CONDENSER INLET PORT
2 - NUT
3 - A/C DISCHARGE LINE
4 - SERVICE PORT
5 - SUCTION LINE
6 - EVAPORATOR TAPPING BLOCK
7 - A/C ACCUMULATOR
8 - A/C PRESSURE TRANSDUCER
9 - A/C COMPRESSOR
10 - A/C CONDENSER

INSTALLATION

NOTE: Replacement of the refrigerant line O-ring seals is required anytime a refrigerant line is opened. Failure to replace the rubber O-ring seals could result in a refrigerant system leak.

(1) Position the A/C suction line(s) into the engine compartment, as required.

(2) Remove the tape or plugs from the opened suction line fittings and the A/C accumulator, A/C compressor and A/C evaporator as required.

(3) Lubricate new rubber O-ring seals with clean refrigerant oil and install them on the suction line fittings. Use only the specified O-ring seals as they are made of a special material for the R-134a system. Use only refrigerant oil of the type recommended for the A/C compressor in the vehicle.

(4) Connect the A/C suction line onto the A/C evaporator, A/C accumulator and A/C compressor, as required.

(5) If required, install the bolt or nut (depending on engine application) that secures the A/C suction line to the A/C compressor. Tighten the bolt or nut to 28 N·m (20 ft. lbs.).

(6) If required, install the nut that secures the A/C suction line to the evaporator tapping block. Tighten the nut to 23 N·m (17 ft. lbs.).

(7) As required, install the nut(s) that secures the A/C suction line to the A/C accumulator. Tighten the nut(s) to 9 N·m (80 in. lbs.).

(8) Reconnect the negative battery cable.

(9) Evacuate the refrigerant system (Refer to 24 - HEATING & AIR CONDITIONING/PLUMBING - STANDARD PROCEDURE - REFRIGERANT SYSTEM EVACUATE).

(10) Charge the refrigerant system (Refer to 24 - HEATING & AIR CONDITIONING/PLUMBING - STANDARD PROCEDURE - REFRIGERANT SYSTEM CHARGE).

SUCTION LINE (Continued)

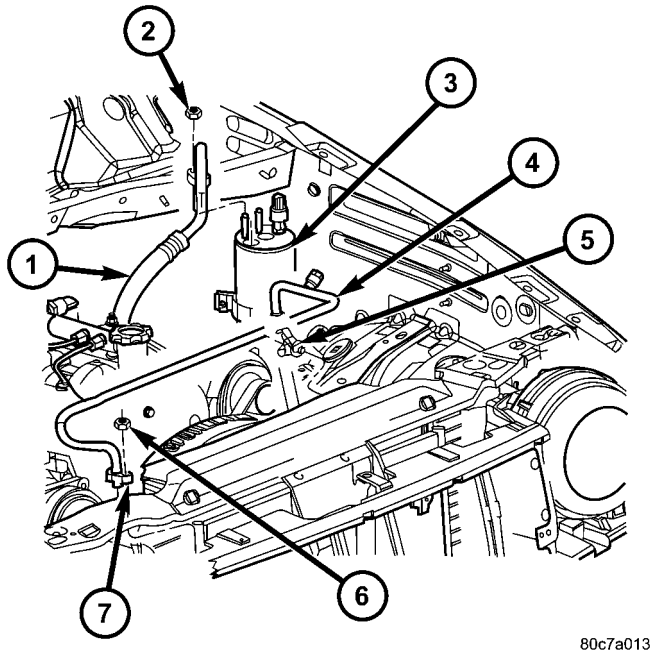

Fig. 23 A/C Suction Line - Typical RHD

1 - SUCTION LINE
2 - NUT
3 - ACCUMULATOR
4 - A/C DISCHARGE LINE
5 - RETAINING CLIP
6 - NUT
7 - DISCHARGE LINE TO CONDENSER FITTING

CABIN HEATER

DESCRIPTION

The diesel engines uses a supplemental cabin heater which is an engine mounted mechanical device commonly called a viscous heater. The viscous heater is used to help heat engine coolant prior to it entering the heater core. The viscous heater is driven by the engine accessory drive belt and has an electro-mechanical clutch which is controlled by the engine control module (ECM).

OPERATION

The supplemental cabin heater (viscous heater) uses an electro-mechanical clutch that receives a signal from the diesel engine control module (ECM) via the A/C-heater control and the cabin heater controller that energizes and engages the clutch. Once engaged, the clutch allows the viscous heater to increase the temperature of the engine coolant flowing to the heater core, which provides heat to the passenger compartment quicker than diesel engines without the supplemental cabin heater.

The supplemental cabin heater generates heat by means of friction which heats a special silicon oil within its housing. The heat is then transferred to the engine coolant when the coolant passes over the fins within the pump. When demand for passenger compartment heat decreases the supplemental cabin heater will receive an input from the cabin heater controller to disengage the clutch.

The supplemental cabin heater cannot be repaired and, if faulty or damaged, the entire cabin heater assembly must be replaced.

REMOVAL

(1) Disconnect and isolate the negative battery cable.

(2) Drain the engine coolant (Refer to 7 - COOLING/ENGINE - STANDARD PROCEDURE).

(3) Remove the engine accessory drive belt (Refer to 7 - COOLING/ACCESSORY DRIVE/DRIVE BELTS - REMOVAL).

(4) Remove the heater hose clamps at the viscous heater (Fig. 24).

(5) Remove the heater hoses from the viscous heater.

(6) Disconnect the wire harness connector from the viscous heater clutch.

(7) Remove the bolts that secure the viscous heater to the mounting bracket.

(8) Remove the viscous heater from the engine compartment.

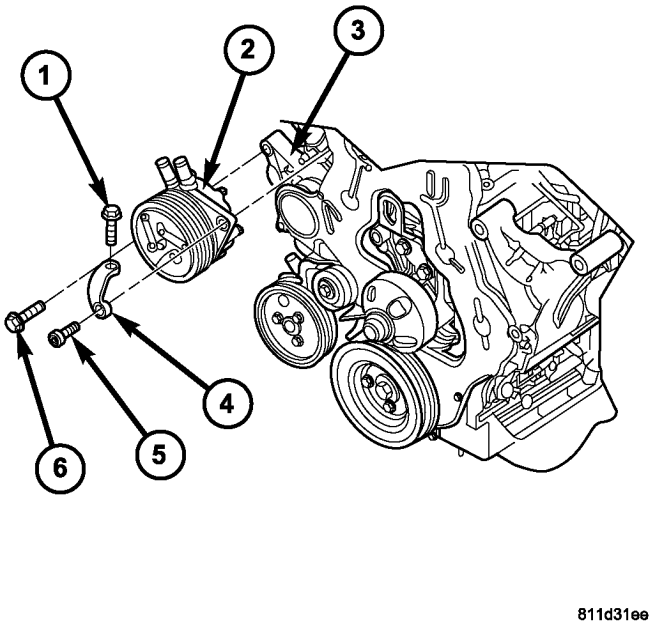

Fig. 24 Viscous Heater - Diesel Engines

1 - BOLT
2 - VISCOUS HEATER
3 - MOUNTING BRACKET
4 - BRACKET
5 - BOLT
6 - BOLT

CABIN HEATER (Continued)

INSTALLATION

(1) Position the viscous heater onto the mounting bracket.

(2) Install the bolts that secure the viscous heater to the bracket. Tighten the bolts to 33 N·m (25 ft. lbs.).

(3) Connect the wiring harness connector to the viscous heater clutch.

(4) Install the heater hoses to the viscous heater connections.

(5) Install the heater hose clamps to viscous heater connections.

(6) Install the engine accessory drive belt (Refer to 7 - COOLING/ACCESSORY DRIVE/DRIVE BELTS - INSTALLATION).

(7) Refill the engine cooling system (Refer to 7 - COOLING/ENGINE - STANDARD PROCEDURE).

(8) Reconnect the negative battery cable.

EMISSIONS CONTROL

TABLE OF CONTENTS

	page
EMISSIONS CONTROL	
DESCRIPTION	
GAS ENGINES	1
2.8L TURBODIESEL	2
DESCRIPTION - STATE DISPLAY TEST MODE	2
DESCRIPTION - CIRCUIT ACTUATION TEST MODE	2
DESCRIPTION - DIAGNOSTIC TROUBLE CODES	3
DESCRIPTION - TASK MANAGER	3
DESCRIPTION - MONITORED SYSTEMS	3
DESCRIPTION - TRIP DEFINITION	5
DESCRIPTION - COMPONENT MONITORS	6
DESCRIPTION - NON-MONITORED CIRCUITS	6
DESCRIPTION - HIGH AND LOW LIMITS	7
DESCRIPTION - LOAD VALUE	7
OPERATION - TASK MANAGER	7
EVAPORATIVE EMISSIONS	11
EXHAUST GAS RECIRCULATION	23

EMISSIONS CONTROL

DESCRIPTION

GAS ENGINES

The Powertrain Control Module (PCM) monitors many different circuits in the fuel injection, ignition, emission and engine systems. If the PCM senses a problem with a monitored circuit often enough to indicate an actual problem, it stores a Diagnostic Trouble Code (DTC) in the PCM's memory. If the code applies to a non-emissions related component or system, and the problem is repaired or ceases to exist, the PCM cancels the code after 40 warm-up cycles. Diagnostic trouble codes that affect vehicle emissions illuminate the Malfunction Indicator Lamp (MIL). The MIL is displayed as an engine icon on the instrument panel. Refer to Malfunction Indicator Lamp (MIL) in this section.

Certain criteria must be met before the PCM stores a DTC in memory. The criteria may be a specific range of engine RPM, engine temperature, and/or input voltage to the PCM.

The PCM might not store a DTC for a monitored circuit even though a malfunction has occurred. This may happen because one of the DTC criteria for the circuit has not been met. **For example** , assume the diagnostic trouble code criteria requires the PCM to monitor the circuit only when the engine operates between 750 and 2000 RPM. Suppose the sensor's output circuit shorts to ground when engine operates above 2400 RPM (resulting in 0 volt input to the PCM). Because the condition happens at an engine speed above the maximum threshold (2000 rpm), the PCM will not store a DTC.

There are several operating conditions for which the PCM monitors and sets DTC's. Refer to Monitored Systems, Components, and Non-Monitored Circuits in this section.

Technicians must retrieve stored DTC's by connecting the DRB scan tool (or an equivalent scan tool) to the 16–way data link connector (Fig. 1).

NOTE: Various diagnostic procedures may actually cause a diagnostic monitor to set a DTC. For instance, pulling a spark plug wire to perform a spark test may set the misfire code. When a repair is completed and verified, connect the DRB scan tool to the 16–way data link connector to erase all DTC's and extinguish the MIL.

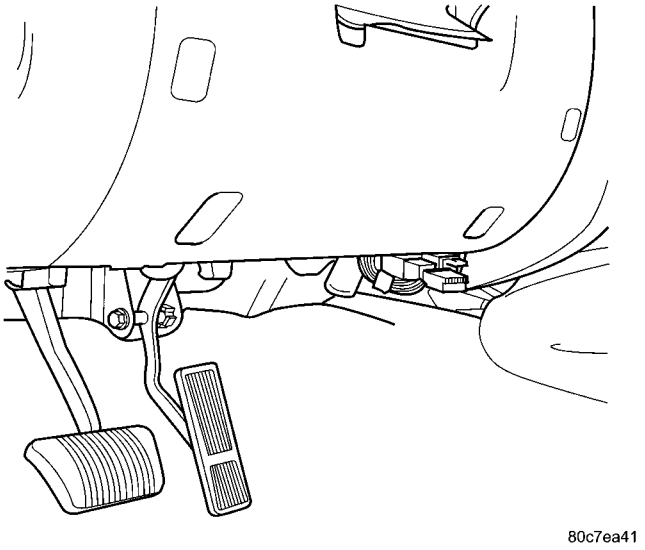

Fig. 1 DATA LINK CONNECTOR LOCATION

EMISSIONS CONTROL (Continued)

2.8L TURBODIESEL

The 2.8L diesel Engine Control Module (ECM) controls many different circuits in the fuel injection pump and engine systems. If the ECM senses a problem with a monitored circuit that indicates an actual problem, a Diagnostic Trouble Code (DTC) will be stored in the ECM's memory, and eventually may illuminate the MIL (Malfunction Indicator Lamp) constantly while the key is on. If the problem is repaired, or is intermittent, the ECM will erase the DTC after 40 warm-up cycles without the fault detected. A warm-up cycle consists of starting the vehicle when the engine is cold, then the engine is warmed up to a certain temperature, and finally, the engine temperature falls to a normal operating temperature, then the key is turned off.

Certain criteria must be met for a DTC to be entered into ECM memory. The criteria may be a specific range of engine rpm, engine or fuel temperature and/or input voltage to the ECM. A DTC indicates that the ECM has identified an abnormal signal in a circuit or the system.

There are several operating conditions that the ECM does not monitor and set a DTC for. Refer to the following Monitored Circuits and Non-Monitored Circuits in this section.

ECM MONITORED SYSTEMS

The ECM can detect certain problems in the electrical system.

Open or Shorted Circuit – The ECM will not distinguish between an open or a short to ground, however the ECM can determine if there is excessive current on a circuit, such as a short to voltage or a decrease in component resistance.

Output Device Current Flow – The ECM senses whether the output devices are electrically connected.

If there is a problem with the circuit, the ECM senses whether the circuit is open, shorted to ground (–), or shorted to (+) voltage.

Fuel Pressure: High fuel pressure is controlled by the fuel injection pump, fuel pressure solenoid, and fuel rail pressure sensor. The ECM uses inputs from the sensor and solenoid to calculate and determine if a high fuel pressure problem exists.

Fuel Injector Malfunctions: The ECM can determine if a fuel injector has an electrical problem. The fuel injectors on the diesel engine are **controlled** by the ECM.

ECM NON-MONITORED SYSTEMS

The ECM does not monitor the following circuits, systems or conditions that could have malfunctions that result in driveability problems. A DTC will not be displayed for these conditions.

Cylinder Compression: The ECM cannot detect uneven, low, or high engine cylinder compression.

Exhaust System: The ECM cannot detect a plugged, restricted or leaking exhaust system.

Vacuum Assist: Leaks or restrictions in the vacuum circuits of the Exhaust Gas Recirculation System (EGR) are not monitored by the ECM.

ECM System Ground: The ECM cannot determine a poor system ground. However, a DTC may be generated as a result of this condition.

ECM/PCM Connector Engagement: The ECM cannot determine spread or damaged connector pins. However, a DTC may be generated as a result of this condition.

HIGH AND LOW LIMITS

The ECM compares input signals from each input device. There are high and low limits that are programmed into the ECM for that device. If the inputs are not within specifications and other DTC criteria are met, a DTC will be stored in memory. Other DTC criteria might include engine rpm limits or input voltages from other sensors or switches. The other inputs might have to be sensed by the ECM when it senses a high or low input voltage from the control system device in question.

DESCRIPTION - STATE DISPLAY TEST MODE

The switch inputs to the Powertrain Control Module (PCM) have two recognized states; HIGH and LOW. For this reason, the PCM cannot recognize the difference between a selected switch position versus an open circuit, a short circuit, or a defective switch. If the State Display screen shows the change from HIGH to LOW or LOW to HIGH, assume the entire switch circuit to the PCM functions properly. Connect the DRB scan tool to the data link connector and access the state display screen. Then access either State Display Inputs and Outputs or State Display Sensors.

DESCRIPTION - CIRCUIT ACTUATION TEST MODE

The Circuit Actuation Test Mode checks for proper operation of output circuits or devices the Powertrain Control Module (PCM) may not internally recognize. The PCM attempts to activate these outputs and allow an observer to verify proper operation. Most of the tests provide an audible or visual indication of device operation (click of relay contacts, fuel spray, etc.). Except for intermittent conditions, if a device functions properly during testing, assume the device, its associated wiring, and driver circuit work correctly. Connect the DRB scan tool to the data link connector and access the Actuators screen.

EMISSIONS CONTROL (Continued)

DESCRIPTION - DIAGNOSTIC TROUBLE CODES

A Diagnostic Trouble Code (DTC) indicates the PCM has recognized an abnormal condition in the system.

Remember that DTC's are the results of a system or circuit failure, but do not directly identify the failed component or components.

BULB CHECK

Each time the ignition key is turned to the ON position, the malfunction indicator (check engine) lamp on the instrument panel should illuminate for approximately 2 seconds then go out. This is done for a bulb check.

OBTAINING DTC'S USING DRB SCAN TOOL

(1) Obtain the applicable Powertrain Diagnostic Manual.

(2) Obtain the DRB Scan Tool.

(3) Connect the DRB Scan Tool to the data link (diagnostic) connector. This connector is located in the passenger compartment; at the lower edge of instrument panel; near the steering column.

(4) Turn the ignition switch on and access the "Read Fault" screen.

(5) Record all the DTC's and "freeze frame" information shown on the DRB scan tool.

(6) To erase DTC's, use the "Erase Trouble Code" data screen on the DRB scan tool. **Do not erase any DTC's until problems have been investigated and repairs have been performed.**

DESCRIPTION - TASK MANAGER

The PCM is responsible for efficiently coordinating the operation of all the emissions-related components. The PCM is also responsible for determining if the diagnostic systems are operating properly. The software designed to carry out these responsibilities is referred to as the 'Task Manager'.

DESCRIPTION - MONITORED SYSTEMS

There are new electronic circuit monitors that check fuel, emission, engine and ignition performance. These monitors use information from various sensor circuits to indicate the overall operation of the fuel, engine, ignition and emission systems and thus the emissions performance of the vehicle.

The fuel, engine, ignition and emission systems monitors do not indicate a specific component problem. They do indicate that there is an implied problem within one of the systems and that a specific problem must be diagnosed.

If any of these monitors detect a problem affecting vehicle emissions, the Malfunction Indicator Lamp (MIL) will be illuminated. These monitors generate Diagnostic Trouble Codes that can be displayed with the MIL or a scan tool.

The following is a list of the system monitors:

- Misfire Monitor
- Fuel System Monitor
- Oxygen Sensor Monitor
- Oxygen Sensor Heater Monitor
- Catalyst Monitor
- Leak Detection Pump Monitor (if equipped)

All these system monitors require two consecutive trips with the malfunction present to set a fault.

Refer to the appropriate Powertrain Diagnostics Procedures manual for diagnostic procedures.

The following is an operation and description of each system monitor:

OXYGEN SENSOR (O2S) MONITOR

Effective control of exhaust emissions is achieved by an oxygen feedback system. The most important element of the feedback system is the O2S. The O2S is located in the exhaust path. Once it reaches operating temperature 300° to 350°C (572° to 662°F), the sensor generates a voltage that is inversely proportional to the amount of oxygen in the exhaust. The information obtained by the sensor is used to calculate the fuel injector pulse width. This maintains a 14.7 to 1 Air Fuel (A/F) ratio. At this mixture ratio, the catalyst works best to remove hydrocarbons (HC), carbon monoxide (CO) and nitrogen oxide (NOx) from the exhaust.

The O2S is also the main sensing element for the Catalyst and Fuel Monitors.

The O2S can fail in any or all of the following manners:

- slow response rate
- reduced output voltage
- dynamic shift
- shorted or open circuits

Response rate is the time required for the sensor to switch from lean to rich once it is exposed to a richer than optimum A/F mixture or vice versa. As the sensor starts malfunctioning, it could take longer to detect the changes in the oxygen content of the exhaust gas.

The output voltage of the O2S ranges from 0 to 1 volt. A good sensor can easily generate any output voltage in this range as it is exposed to different concentrations of oxygen. To detect a shift in the A/F mixture (lean or rich), the output voltage has to change beyond a threshold value. A malfunctioning sensor could have difficulty changing beyond the threshold value.

EMISSIONS CONTROL (Continued)

OXYGEN SENSOR HEATER MONITOR

If there is an oxygen sensor (O2S) shorted to voltage DTC, as well as a O2S heater DTC, the O2S fault MUST be repaired first. Before checking the O2S fault, verify that the heater circuit is operating correctly.

Effective control of exhaust emissions is achieved by an oxygen feedback system. The most important element of the feedback system is the O2S. The O2S is located in the exhaust path. Once it reaches operating temperature 300° to 350°C (572 ° to 662°F), the sensor generates a voltage that is inversely proportional to the amount of oxygen in the exhaust. The information obtained by the sensor is used to calculate the fuel injector pulse width. This maintains a 14.7 to 1 Air Fuel (A/F) ratio. At this mixture ratio, the catalyst works best to remove hydrocarbons (HC), carbon monoxide (CO) and nitrogen oxide (NOx) from the exhaust.

The voltage readings taken from the O2S sensor are very temperature sensitive. The readings are not accurate below 300°C. Heating of the O2S sensor is done to allow the engine controller to shift to closed loop control as soon as possible. The heating element used to heat the O2S sensor must be tested to ensure that it is heating the sensor properly.

The O2S sensor circuit is monitored for a drop in voltage. The sensor output is used to test the heater by isolating the effect of the heater element on the O2S sensor output voltage from the other effects.

LEAK DETECTION PUMP MONITOR (IF EQUIPPED)

The leak detection assembly incorporates two primary functions: it must detect a leak in the evaporative system and seal the evaporative system so the leak detection test can be run.

The primary components within the assembly are: A three port solenoid that activates both of the functions listed above; a pump which contains a switch, two check valves and a spring/diaphragm, a canister vent valve (CVV) seal which contains a spring loaded vent seal valve.

Immediately after a cold start, between predetermined temperature thresholds limits, the three port solenoid is briefly energized. This initializes the pump by drawing air into the pump cavity and also closes the vent seal. During non test conditions the vent seal is held open by the pump diaphragm assembly which pushes it open at the full travel position. The vent seal will remain closed while the pump is cycling due to the reed switch triggering of the three port solenoid that prevents the diaphragm assembly from reaching full travel. After the brief initialization period, the solenoid is de-energized allowing atmospheric pressure to enter the pump cavity, thus permitting the spring to drive the diaphragm which forces air out of the pump cavity and into the vent system. When the solenoid is energized and de energized, the cycle is repeated creating flow in typical diaphragm pump fashion. The pump is controlled in 2 modes:

Pump Mode: The pump is cycled at a fixed rate to achieve a rapid pressure build in order to shorten the overall test length.

Test Mode: The solenoid is energized with a fixed duration pulse. Subsequent fixed pulses occur when the diaphragm reaches the Switch closure point.

The spring in the pump is set so that the system will achieve an equalized pressure of about 7.5” water. The cycle rate of pump strokes is quite rapid as the system begins to pump up to this pressure. As the pressure increases, the cycle rate starts to drop off. If there is no leak in the system, the pump would eventually stop pumping at the equalized pressure. If there is a leak, it will continue to pump at a rate representative of the flow characteristic of the size of the leak. From this information we can determine if the leak is larger than the required detection limit (currently set at .040” orifice by CARB). If a leak is revealed during the leak test portion of the test, the test is terminated at the end of the test mode and no further system checks will be performed.

After passing the leak detection phase of the test, system pressure is maintained by turning on the LDP’s solenoid until the purge system is activated. Purge activation in effect creates a leak. The cycle rate is again interrogated and when it increases due to the flow through the purge system, the leak check portion of the diagnostic is complete.

The canister vent valve will unseal the system after completion of the test sequence as the pump diaphragm assembly moves to the full travel position.

Evaporative system functionality will be verified by using the stricter evap purge flow monitor. At an appropriate warm idle the LDP will be energized to seal the canister vent. The purge flow will be clocked up from some small value in an attempt to see a shift in the 02 control system. If fuel vapor, indicated by a shift in the 02 control, is present the test is passed. If not, it is assumed that the purge system is not functioning in some respect. The LDP is again turned off and the test is ended.

MISFIRE MONITOR

Excessive engine misfire results in increased catalyst temperature and causes an increase in HC emissions. Severe misfires could cause catalyst damage. To prevent catalytic convertor damage, the PCM monitors engine misfire.

The Powertrain Control Module (PCM) monitors for misfire during most engine operating conditions (positive torque) by looking at changes in the crank-

EMISSIONS CONTROL (Continued)

shaft speed. If a misfire occurs the speed of the crankshaft will vary more than normal.

FUEL SYSTEM MONITOR

To comply with clean air regulations, vehicles are equipped with catalytic converters. These converters reduce the emission of hydrocarbons, oxides of nitrogen and carbon monoxide. The catalyst works best when the Air Fuel (A/F) ratio is at or near the optimum of 14.7 to 1.

The PCM is programmed to maintain the optimum air/fuel ratio of 14.7 to 1. This is done by making short term corrections in the fuel injector pulse width based on the O2S sensor output. The programmed memory acts as a self calibration tool that the engine controller uses to compensate for variations in engine specifications, sensor tolerances and engine fatigue over the life span of the engine. By monitoring the actual fuel-air ratio with the O2S sensor (short term) and multiplying that with the program long-term (adaptive) memory and comparing that to the limit, it can be determined whether it will pass an emissions test. If a malfunction occurs such that the PCM cannot maintain the optimum A/F ratio, then the MIL will be illuminated.

CATALYST MONITOR

To comply with clean air regulations, vehicles are equipped with catalytic converters. These converters reduce the emission of hydrocarbons, oxides of nitrogen and carbon monoxide.

Normal vehicle miles or engine misfire can cause a catalyst to decay. This can increase vehicle emissions and deteriorate engine performance, driveability and fuel economy.

The catalyst monitor uses dual oxygen sensors (O2S's) to monitor the efficiency of the converter. The dual O2S's sensor strategy is based on the fact that as a catalyst deteriorates, its oxygen storage capacity and its efficiency are both reduced. By monitoring the oxygen storage capacity of a catalyst, its efficiency can be indirectly calculated. The upstream O2S is used to detect the amount of oxygen in the exhaust gas before the gas enters the catalytic converter. The PCM calculates the A/F mixture from the output of the O2S. A low voltage indicates high oxygen content (lean mixture). A high voltage indicates a low content of oxygen (rich mixture).

When the upstream O2S detects a lean condition, there is an abundance of oxygen in the exhaust gas. A functioning converter would store this oxygen so it can use it for the oxidation of HC and CO. As the converter absorbs the oxygen, there will be a lack of oxygen downstream of the converter. The output of the downstream O2S will indicate limited activity in this condition.

As the converter loses the ability to store oxygen, the condition can be detected from the behavior of the downstream O2S. When the efficiency drops, no chemical reaction takes place. This means the concentration of oxygen will be the same downstream as upstream. The output voltage of the downstream O2S copies the voltage of the upstream sensor. The only difference is a time lag (seen by the PCM) between the switching of the O2S's.

To monitor the system, the number of lean-to-rich switches of upstream and downstream O2S's is counted. The ratio of downstream switches to upstream switches is used to determine whether the catalyst is operating properly. An effective catalyst will have fewer downstream switches than it has upstream switches i.e., a ratio closer to zero. For a totally ineffective catalyst, this ratio will be one-to-one, indicating that no oxidation occurs in the device.

The system must be monitored so that when catalyst efficiency deteriorates and exhaust emissions increase to over the legal limit, the MIL will be illuminated.

DESCRIPTION - TRIP DEFINITION

The term "Trip" has different meanings depending on what the circumstances are. If the MIL (Malfunction Indicator Lamp) is OFF, a Trip is defined as when the Oxygen Sensor Monitor and the Catalyst Monitor have been completed in the same drive cycle.

When any Emission DTC is set, the MIL on the dash is turned ON. When the MIL is ON, it takes 3 good trips to turn the MIL OFF. In this case, it depends on what type of DTC is set to know what a "Trip" is.

For the Fuel Monitor or Mis-Fire Monitor (continuous monitor), the vehicle must be operated in the "Similar Condition Window" for a specified amount of time to be considered a Good Trip.

If a Non-Contiuous OBDII Monitor fails twice in a row and turns ON the MIL, re-running that monitor which previously failed, on the next start-up and passing the monitor, is considered to be a Good Trip. These will include the following:

- Oxygen Sensor
- Catalyst Monitor
- Purge Flow Monitor
- Leak Detection Pump Monitor (if equipped)
- EGR Monitor (if equipped)
- Oxygen Sensor Heater Monitor

If any other Emission DTC is set (not an OBDII Monitor), a Good Trip is considered to be when the Oxygen Sensor Monitor and Catalyst Monitor have been completed; or 2 Minutes of engine run time if the Oxygen Sensor Monitor or Catalyst Monitor have been stopped from running.

It can take up to 2 Failures in a row to turn on the MIL. After the MIL is ON, it takes 3 Good Trips to turn the MIL OFF. After the MIL is OFF, the PCM will self-erase the DTC after 40 Warm-up cycles. A Warm-up cycle is counted when the ECT (Engine Coolant Temperature Sensor) has crossed 160°F and has risen by at least 40°F since the engine has been started.

DESCRIPTION - COMPONENT MONITORS

There are several components that will affect vehicle emissions if they malfunction. If one of these components malfunctions the Malfunction Indicator Lamp (MIL) will illuminate.

Some of the component monitors are checking for proper operation of the part. Electrically operated components now have input (rationality) and output (functionality) checks. Previously, a component like the Throttle Position sensor (TPS) was checked by the PCM for an open or shorted circuit. If one of these conditions occurred, a DTC was set. Now there is a check to ensure that the component is working. This is done by watching for a TPS indication of a greater or lesser throttle opening than MAP and engine rpm indicate. In the case of the TPS, if engine vacuum is high and engine rpm is 1600 or greater and the TPS indicates a large throttle opening, a DTC will be set. The same applies to low vacuum if the TPS indicates a small throttle opening.

All open/short circuit checks or any component that has an associated limp in will set a fault after 1 trip with the malfunction present. Components without an associated limp in will take two trips to illuminate the MIL.

Refer to the Diagnostic Trouble Codes Description Charts in this section and the appropriate Powertrain Diagnostic Procedure Manual for diagnostic procedures.

DESCRIPTION - NON-MONITORED CIRCUITS

The PCM does not monitor the following circuits, systems and conditions that could have malfunctions causing driveability problems. The PCM might not store diagnostic trouble codes for these conditions. However, problems with these systems may cause the PCM to store diagnostic trouble codes for other systems or components. For example, a fuel pressure problem will not register a fault directly, but could cause a rich/lean condition or misfire. This could cause the PCM to store an oxygen sensor or misfire diagnostic trouble code

FUEL PRESSURE

The fuel pressure regulator controls fuel system pressure. The PCM cannot detect a clogged fuel pump inlet filter, clogged in-line fuel filter, or a pinched fuel supply or return line. However, these could result in a rich or lean condition causing the PCM to store an oxygen sensor or fuel system diagnostic trouble code.

SECONDARY IGNITION CIRCUIT

The PCM cannot detect an inoperative ignition coil, fouled or worn spark plugs, ignition cross firing, or open spark plug cables.

CYLINDER COMPRESSION

The PCM cannot detect uneven, low, or high engine cylinder compression.

EXHAUST SYSTEM

The PCM cannot detect a plugged, restricted or leaking exhaust system, although it may set a fuel system fault.

FUEL INJECTOR MECHANICAL MALFUNCTIONS

The PCM cannot determine if a fuel injector is clogged, the needle is sticking or if the wrong injector is installed. However, these could result in a rich or lean condition causing the PCM to store a diagnostic trouble code for either misfire, an oxygen sensor, or the fuel system.

EXCESSIVE OIL CONSUMPTION

Although the PCM monitors engine exhaust oxygen content when the system is in closed loop, it cannot determine excessive oil consumption.

THROTTLE BODY AIRFLOW

The PCM cannot detect a clogged or restricted air cleaner inlet or filter element.

VACUUM ASSIST

The PCM cannot detect leaks or restrictions in the vacuum circuits of vacuum assisted engine control system devices. However, these could cause the PCM to store a MAP sensor diagnostic trouble code and cause a high idle condition.

PCM SYSTEM GROUND

The PCM cannot determine a poor system ground. However, one or more diagnostic trouble codes may be generated as a result of this condition. The module should be mounted to the body at all times, also during diagnostic.

PCM CONNECTOR ENGAGEMENT

The PCM may not be able to determine spread or damaged connector pins. However, it might store diagnostic trouble codes as a result of spread connector pins.

EMISSIONS CONTROL (Continued)

DESCRIPTION - HIGH AND LOW LIMITS

The PCM compares input signal voltages from each input device with established high and low limits for the device. If the input voltage is not within limits and other criteria are met, the PCM stores a diagnostic trouble code in memory. Other diagnostic trouble code criteria might include engine RPM limits or input voltages from other sensors or switches that must be present before verifying a diagnostic trouble code condition.

DESCRIPTION - LOAD VALUE

ENGINE	IDLE/NEUTRAL	2500 RPM/NEUTRAL
All Engines	2% to 8% of Maximum Load	9% to 17% of Maximum Load

OPERATION - TASK MANAGER

The Task Manager determines which tests happen when and which functions occur when. Many of the diagnostic steps required by OBD II must be performed under specific operating conditions. The Task Manager software organizes and prioritizes the diagnostic procedures. The job of the Task Manager is to determine if conditions are appropriate for tests to be run, monitor the parameters for a trip for each test, and record the results of the test. Following are the responsibilities of the Task Manager software:

- Test Sequence
- MIL Illumination
- Diagnostic Trouble Codes (DTCs)
- Trip Indicator
- Freeze Frame Data Storage
- Similar Conditions Window

Test Sequence

In many instances, emissions systems must fail diagnostic tests more than once before the PCM illuminates the MIL. These tests are know as 'two trip monitors.' Other tests that turn the MIL lamp on after a single failure are known as 'one trip monitors.' A trip is defined as 'start the vehicle and operate it to meet the criteria necessary to run the given monitor.'

Many of the diagnostic tests must be performed under certain operating conditions. However, there are times when tests cannot be run because another test is in progress (conflict), another test has failed (pending) or the Task Manager has set a fault that may cause a failure of the test (suspend).

- Pending

Under some situations the Task Manager will not run a monitor if the MIL is illuminated and a fault is stored from another monitor. In these situations, the Task Manager postpones monitors **pending** resolution of the original fault. The Task Manager does not run the test until the problem is remedied.

For example, when the MIL is illuminated for an Oxygen Sensor fault, the Task Manager does not run the Catalyst Monitor until the Oxygen Sensor fault is remedied. Since the Catalyst Monitor is based on signals from the Oxygen Sensor, running the test would produce inaccurate results.

- Conflict

There are situations when the Task Manager does not run a test if another monitor is in progress. In these situations, the effects of another monitor running could result in an erroneous failure. If this **conflict** is present, the monitor is not run until the conflicting condition passes. Most likely the monitor will run later after the conflicting monitor has passed.

For example, if the Fuel System Monitor is in progress, the Task Manager does not run the EGR Monitor. Since both tests monitor changes in air/fuel ratio and adaptive fuel compensation, the monitors will conflict with each other.

- Suspend

Occasionally the Task Manager may not allow a two trip fault to mature. The Task Manager will **suspend** the maturing of a fault if a condition exists that may induce an erroneous failure. This prevents illuminating the MIL for the wrong fault and allows more precis diagnosis.

For example, if the PCM is storing a one trip fault for the Oxygen Sensor and the EGR monitor, the Task Manager may still run the EGR Monitor but will suspend the results until the Oxygen Sensor Monitor either passes or fails. At that point the Task Manager can determine if the EGR system is actually failing or if an Oxygen Sensor is failing.

MIL Illumination

The PCM Task Manager carries out the illumination of the MIL. The Task Manager triggers MIL illumination upon test failure, depending on monitor failure criteria.

The Task Manager Screen shows both a Requested MIL state and an Actual MIL state. When the MIL is illuminated upon completion of a test for a third trip, the Requested MIL state changes to OFF. However, the MIL remains illuminated until the next key cycle. (On some vehicles, the MIL will actually turn OFF during the third key cycle) During the key cycle

for the third good trip, the Requested MIL state is OFF, while the Actual MIL state is ON. After the next key cycle, the MIL is not illuminated and both MIL states read OFF.

Diagnostic Trouble Codes (DTCs)

With OBD II, different DTC faults have different priorities according to regulations. As a result, the priorities determine MIL illumination and DTC erasure. DTCs are entered according to individual priority. DTCs with a higher priority overwrite lower priority DTCs.

Priorities

- Priority 0 —Non-emissions related trouble codes
- Priority 1 — One trip failure of a two trip fault for non-fuel system and non-misfire.
- Priority 2 — One trip failure of a two trip fault for fuel system (rich/lean) or misfire.
- Priority 3 — Two trip failure for a non-fuel system and non-misfire or matured one trip comprehensive component fault.
- Priority 4 — Two trip failure or matured fault for fuel system (rich/lean) and misfire or one trip catalyst damaging misfire.

Non-emissions related failures have no priority. One trip failures of two trip faults have low priority. Two trip failures or matured faults have higher priority. One and two trip failures of fuel system and misfire monitor take precedence over non-fuel system and non-misfire failures.

DTC Self Erasure

With one trip components or systems, the MIL is illuminated upon test failure and DTCs are stored.

Two trip monitors are components requiring failure in two consecutive trips for MIL illumination. Upon failure of the first test, the Task Manager enters a maturing code. If the component fails the test for a second time the code matures and a DTC is set.

After three good trips the MIL is extinguished and the Task Manager automatically switches the trip counter to a warm-up cycle counter. DTCs are automatically erased following 40 warm-up cycles if the component does not fail again.

For misfire and fuel system monitors, the component must pass the test under a Similar Conditions Window in order to record a good trip. A Similar Conditions Window is when engine RPM is within ±375 RPM and load is within ±10% of when the fault occurred.

NOTE: It is important to understand that a component does not have to fail under a similar window of operation to mature. It must pass the test under a Similar Conditions Window when it failed to record a Good Trip for DTC erasure for misfire and fuel system monitors.

DTCs can be erased anytime with a DRB III. Erasing the DTC with the DRB III erases all OBD II information. The DRB III automatically displays a warning that erasing the DTC will also erase all OBD II monitor data. This includes all counter information for warm-up cycles, trips and Freeze Frame.

Trip Indicator

The **Trip** is essential for running monitors and extinguishing the MIL. In OBD II terms, a trip is a set of vehicle operating conditions that must be met for a specific monitor to run. All trips begin with a key cycle.

Good Trip

The Good Trip counters are as follows:

- Specific Good Trip
- Fuel System Good Trip
- Misfire Good Trip
- Alternate Good Trip (appears as a Global Good Trip on DRB III)
  - Comprehensive Components
  - Major Monitor
- Warm-Up Cycles

Specific Good Trip

The term Good Trip has different meanings depending on the circumstances:

- If the MIL is OFF, a trip is defined as when the Oxygen Sensor Monitor and the Catalyst Monitor have been completed in the same drive cycle.
- If the MIL is ON and a DTC was set by the Fuel Monitor or Misfire Monitor (both continuous monitors), the vehicle must be operated in the Similar Condition Window for a specified amount of time.
- If the MIL is ON and a DTC was set by a Task Manager commanded once-per-trip monitor (such as the Oxygen Sensor Monitor, Catalyst Monitor, Purge Flow Monitor, Leak Detection Pump Monitor, EGR Monitor or Oxygen Sensor Heater Monitor), a good trip is when the monitor is passed on the next start-up.
- If the MIL is ON and any other emissions DTC was set (not an OBD II monitor), a good trip occurs when the Oxygen Sensor Monitor and Catalyst Monitor have been completed, or two minutes of engine run time if the Oxygen Sensor Monitor and Catalyst Monitor have been stopped from running.

Fuel System Good Trip

To count a good trip (three required) and turn off the MIL, the following conditions must occur:

- Engine in closed loop
- Operating in Similar Conditions Window
- Short Term multiplied by Long Term less than threshold
- Less than threshold for a predetermined time

EMISSIONS CONTROL (Continued)

If all of the previous criteria are met, the PCM will count a good trip (three required) and turn off the MIL.

Misfire Good Trip

If the following conditions are met the PCM will count one good trip (three required) in order to turn off the MIL:

- Operating in Similar Condition Window
- 1000 engine revolutions with no misfire

Warm-Up Cycles

Once the MIL has been extinguished by the Good Trip Counter, the PCM automatically switches to a Warm-Up Cycle Counter that can be viewed on the DRB III. Warm-Up Cycles are used to erase DTCs and Freeze Frames. Forty Warm-Up cycles must occur in order for the PCM to self-erase a DTC and Freeze Frame. A Warm-Up Cycle is defined as follows:

- Engine coolant temperature must start below and rise above 160° F
- Engine coolant temperature must rise by 40° F
- No further faults occur

Freeze Frame Data Storage

Once a failure occurs, the Task Manager records several engine operating conditions and stores it in a Freeze Frame. The Freeze Frame is considered one frame of information taken by an on-board data recorder. When a fault occurs, the PCM stores the input data from various sensors so that technicians can determine under what vehicle operating conditions the failure occurred.

The data stored in Freeze Frame is usually recorded when a system fails the first time for two trip faults. Freeze Frame data will only be overwritten by a different fault with a higher priority.

CAUTION: Erasing DTCs, either with the DRB III or by disconnecting the battery, also clears all Freeze Frame data.

Similar Conditions Window

The Similar Conditions Window displays information about engine operation during a monitor. Absolute MAP (engine load) and Engine RPM are stored in this window when a failure occurs. There are two different Similar conditions Windows: Fuel System and Misfire.

FUEL SYSTEM

- **Fuel System Similar Conditions Window** — An indicator that 'Absolute MAP When Fuel Sys Fail' and 'RPM When Fuel Sys Failed' are all in the same range when the failure occurred. Indicated by switching from 'NO' to 'YES'.
- **Absolute MAP When Fuel Sys Fail** — The stored MAP reading at the time of failure. Informs the user at what engine load the failure occurred.
- **Absolute MAP** — A live reading of engine load to aid the user in accessing the Similar Conditions Window.
- **RPM When Fuel Sys Fail** — The stored RPM reading at the time of failure. Informs the user at what engine RPM the failure occurred.
- **Engine RPM** — A live reading of engine RPM to aid the user in accessing the Similar Conditions Window.
- **Adaptive Memory Factor** — The PCM utilizes both Short Term Compensation and Long Term Adaptive to calculate the Adaptive Memory Factor for total fuel correction.
- **Upstream O2S Volts** — A live reading of the Oxygen Sensor to indicate its performance. For example, stuck lean, stuck rich, etc.
- **SCW Time in Window (Similar Conditions Window Time in Window)** — A timer used by the PCM that indicates that, after all Similar Conditions have been met, if there has been enough good engine running time in the SCW without failure detected. This timer is used to increment a Good Trip.
- **Fuel System Good Trip Counter** — A Trip Counter used to turn OFF the MIL for Fuel System DTCs. To increment a Fuel System Good Trip, the engine must be in the Similar Conditions Window, Adaptive Memory Factor must be less than calibrated threshold and the Adaptive Memory Factor must stay below that threshold for a calibrated amount of time.
- **Test Done This Trip** — Indicates that the monitor has already been run and completed during the current trip.

MISFIRE

- **Same Misfire Warm-Up State** — Indicates if the misfire occurred when the engine was warmed up (above 160° F).
- **In Similar Misfire Window** — An indicator that 'Absolute MAP When Misfire Occurred' and 'RPM When Misfire Occurred' are all in the same range when the failure occurred. Indicated by switching from 'NO' to 'YES'.
- **Absolute MAP When Misfire Occurred** — The stored MAP reading at the time of failure. Informs the user at what engine load the failure occurred.
- **Absolute MAP** — A live reading of engine load to aid the user in accessing the Similar Conditions Window.
- **RPM When Misfire Occurred** — The stored RPM reading at the time of failure. Informs the user at what engine RPM the failure occurred.

EMISSIONS CONTROL (Continued)

- **Engine RPM** — A live reading of engine RPM to aid the user in accessing the Similar Conditions Window.
- **Adaptive Memory Factor** — The PCM utilizes both Short Term Compensation and Long Term Adaptive to calculate the Adaptive Memory Factor for total fuel correction.
- **200 Rev Counter** — Counts 0–100 720 degree cycles.
- **SCW Cat 200 Rev Counter** — Counts when in similar conditions.
- **SCW FTP 1000 Rev Counter** — Counts 0–4 when in similar conditions.
- **Misfire Good Trip Counter** — Counts up to three to turn OFF the MIL.
- **Misfire Data**— Data collected during test.
- **Test Done This Trip**— Indicates YES when the test is done.

EVAPORATIVE EMISSIONS

TABLE OF CONTENTS

	page
EVAPORATIVE EMISSIONS	
DESCRIPTION - EVAPORATION CONTROL SYSTEM	11
SPECIFICATIONS	
TORQUE	13
EVAP/PURGE SOLENOID	
DESCRIPTION	14
OPERATION	14
REMOVAL	14
INSTALLATION	14
FUEL FILLER CAP	
DESCRIPTION	14
OPERATION	14
ORVR	
DESCRIPTION	14
OPERATION	14
PUMP-NATURAL VAC LEAK DETECTION	
DESCRIPTION	15
OPERATION	15
REMOVAL	16
INSTALLATION	16
PCV VALVE	
DESCRIPTION	17
OPERATION	18
DIAGNOSIS AND TESTING - PCV VALVE	18
REMOVAL	19
INSTALLATION	19
VACUUM LINES	
DESCRIPTION	20
VAPOR CANISTER	
DESCRIPTION	20
OPERATION	20
REMOVAL	21
INSTALLATION	21

EVAPORATIVE EMISSIONS

DESCRIPTION - EVAPORATION CONTROL SYSTEM

The evaporation control system prevents the emission of fuel tank vapors into the atmosphere. When fuel evaporates in the fuel tank, the vapors pass through the control valve located in the top section of the fuel pump module, through the fuel management valve, and through vent hoses and tubes to a charcoal filled evaporative canister. The canister temporarily holds the vapors. The Powertrain Control Module (PCM) allows intake manifold vacuum to draw vapors into the combustion chambers during certain operating conditions.

Gas powered engines use a duty cycle purge system. The PCM controls vapor flow by operating the duty cycle EVAP purge solenoid. Refer to Duty Cycle EVAP Canister Purge Solenoid.

When equipped with certain emissions packages, a Leak Detection Pump (LDP) will be used as part of the evaporative system for OBD II requirements. Also refer to Leak Detection Pump.

Vehicles powered with gasoline engines are also equipped with ORVR (On-Board Refueling Vapor Recovery). Refer to ORVR for additional information.

NOTE: The evaporative system uses specially manufactured lines/hoses. If replacement becomes necessary, only use fuel resistant, low permeation hose.

Certain components can be found in (Fig. 1).

EVAPORATIVE EMISSIONS (Continued)

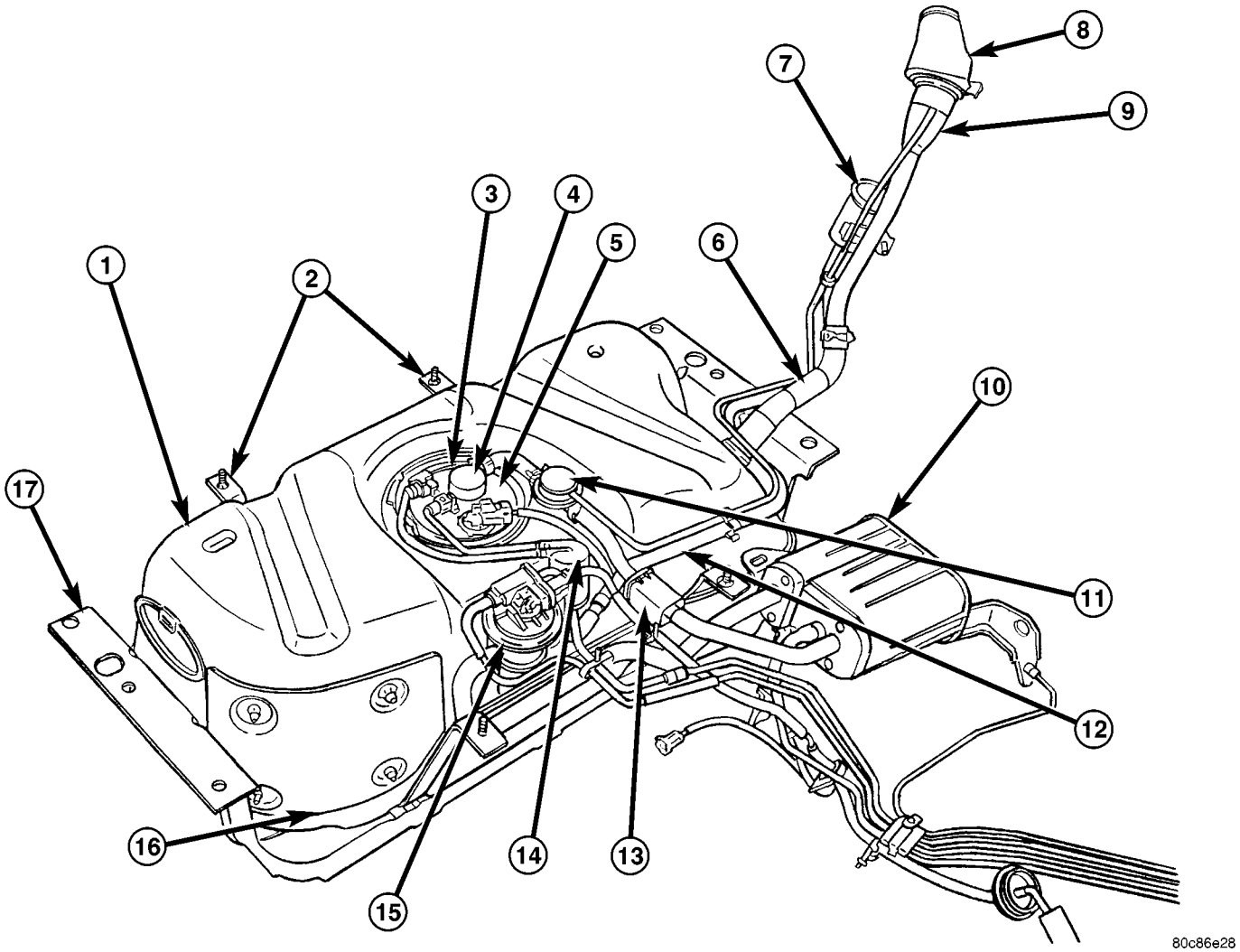

Fig. 1 FUEL DELIVERY COMPONENTS

1 - FUEL TANK
2 - FUEL TANK STRAPS
3 - FUEL PUMP MODULE LOCK RING
4 - CHECK (CONTROL) VALVE
5 - FUEL PUMP MODULE FLANGE
6 - FUEL FILL HOSE
7 - FRESH AIR FILTER
8 - FUEL FILL CAP/BEZEL
9 - FUEL FILL TUBE
10 - EVAP CANISTER
11 - FLOW MANAGEMENT VALVE
12 - FRESH AIR TUBE
13 - HOSE SLEEVE
14 - FUEL FILTER
15 - LEAK DETECTION PUMP
16 - HEAT SHIELD
17 - SKID PLATE

EVAPORATIVE EMISSIONS (Continued)

SPECIFICATIONS

TORQUE

DESCRIPTION	N-m	Ft. Lbs.	In. Lbs.
Accelerator Pedal Bracket Mounting Nuts	12	-	105
Crankshaft Position Sensor - 2.4L	28	21	-
Crankshaft Position Sensor - 3.7L	28	21	-
Camshaft Position Sensor - 2.4L	12	-	106
Camshaft Position Sensor - 3.7L	12	-	106
Engine Coolant Temperature Sensor	11	-	96
EVAP Canister-to-Body Bolts	48	35	-
EVAP Canister-to-Canis. Bracket Bolt/Nut	11	-	100
Fuel Filler Hose Clamp at Tank	3	-	30
Fuel Filler Housing-to-Body Screws	2	-	17
Fuel Filter Mounting Nut at Tank	5.5	-	49
Fuel Pump Module Access Plate Nuts	3	-	26
Fuel Rail Mounting Bolts - 3.7L	11	-	100
Fuel Rail Mounting Bolts - 2.4L	28	-	250
Fuel Tank Heat Sheild Nuts	5.5	-	49
Fuel Tank Mounting Strap Bolts	61	45	-
Fuel Tank Skid Plate and Trailer Hitch	88	65	-
IAC Motor Mounting Screws	7	-	60
Leak Detection Pump Mounting Bracket-to-Fuel Tank Nuts	5.5	-	49
Leak Detection Pump-to-Bracket Nuts	1.2	-	11
Map Sensor Mounting Screws	3	-	25
PCM-to-Mounting Bracket Mounting Screws	4	-	35
Power Steering Pressure Switch	14-22	-	124-195
TPS Mounting Screws	7	-	60
Throttle Body Mounting Bolts	11	-	100
Oxygen Sensors	30	22	-

EVAP/PURGE SOLENOID

DESCRIPTION

The duty cycle EVAP canister purge solenoid (DCP) is located in the engine compartment. It is attached to a bracket located between the battery and the Power Distribution Center (PDC). The EVAP system test port is located near the solenoid.

OPERATION

The duty cycle EVAP canister purge solenoid (DCP) regulates the rate of vapor flow from the EVAP canister to the intake manifold. The Powertrain Control Module (PCM) operates the solenoid.

During the cold start warm-up period and the hot start time delay, the PCM does not energize the solenoid. When de-energized, no vapors are purged. The PCM de-energizes the solenoid during open loop operation.

The engine enters closed loop operation after it reaches a specified temperature and the time delay ends. During closed loop operation, the PCM cycles (energizes and de-energizes) the solenoid 5 or 10 times per second, depending upon operating conditions. The PCM varies the vapor flow rate by changing solenoid pulse width. Pulse width is the amount of time that the solenoid is energized. The PCM adjusts solenoid pulse width based on engine operating condition.

REMOVAL

The duty cycle EVAP canister purge solenoid (DCP) is located in the engine compartment (Fig. 2). It is attached to a bracket located between the battery and the Power Distribution Center (PDC). The EVAP system test port is located near the solenoid (Fig. 2).

(1) Disconnect electrical wiring connector at solenoid.

(2) Disconnect vacuum harness at solenoid.

(3) Remove solenoid and its support bracket (pull straight up).

INSTALLATION

(1) Slip EVAP canister purge solenoid onto its mounting bracket.

(2) Connect vacuum harness to solenoid.

(3) Connect electrical connector to solenoid.

FUEL FILLER CAP

DESCRIPTION

The plastic fuel tank filler tube cap is threaded onto the end of the fuel fill tube. All models are equipped with a 1/4 turn cap.

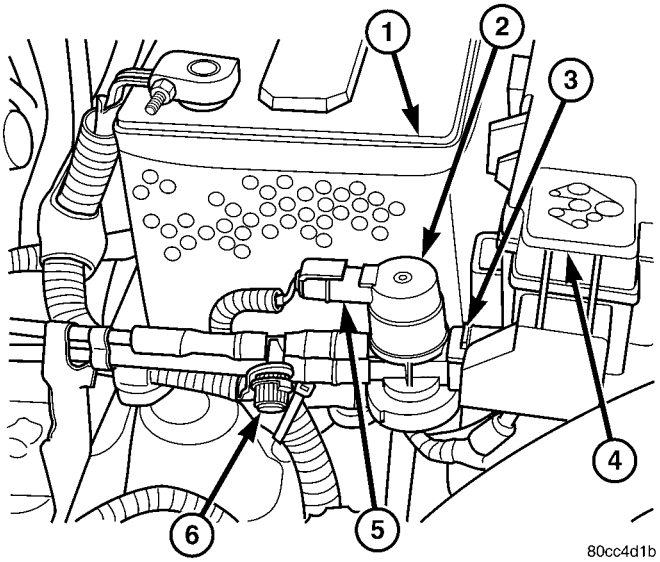

Fig. 2 EVAP / PURGE SOLENOID LOCATION

1 - BATTERY
2 - EVAP/PURGE SOLENOID LOCATION
3 - MOUNTING BRACKET
4 - POWER DISTRIBUTION CENTER (PDC)
5 - SOLENOID ELECTRICAL CONNECTOR
6 - EVAP SYSTEM TEST PORT

OPERATION

The loss of any fuel or vapor out of fuel filler tube is prevented by the use of a pressure-vacuum fuel fill cap. Relief valves inside the cap will release fuel tank pressure at predetermined pressures. Fuel tank vacuum will also be released at predetermined values. This cap must be replaced by a similar unit if replacement is necessary. This is in order for the system to remain effective.

CAUTION: Remove fill cap before servicing any fuel system component to relieve tank pressure. If equipped with an ORVR system and a Leak Detection Pump (LDP), the cap must be tightened securely. If cap is left loose, a Diagnostic Trouble Code (DTC) may be set.

ORVR

DESCRIPTION

The ORVR (On-Board Refueling Vapor Recovery) system consists of a unique fuel tank, flow management valve, fluid control valve, one-way check valve and vapor canister (Fig. 1).

OPERATION

The ORVR (On-Board Refueling Vapor Recovery) system is used to remove excess fuel tank vapors.

ORVR (Continued)

This is done while the vehicle is being refueled. Certain ORVR components can be found in (Fig. 1).

Fuel flowing into the fuel filler tube (approx. 1" I.D.) creates an aspiration effect drawing air into the fuel fill tube. During refueling, the fuel tank is vented to the EVAP canister to capture escaping vapors. With air flowing into the filler tube, there are no fuel vapors escaping to the atmosphere. Once the refueling vapors are captured by the EVAP canister, the vehicle's computer controlled purge system draws vapor out of the canister for the engine to burn. The vapor flow is metered by the purge solenoid so that there is no, or minimal impact on driveability or tailpipe emissions.

As fuel starts to flow through the fuel fill tube, it opens the normally closed check valve and enters the fuel tank. Vapor or air is expelled from the tank through the control valve and on to the vapor canister. Vapor is absorbed in the EVAP canister until vapor flow in the lines stops. This stoppage occurs following fuel shut-off, or by having the fuel level in the tank rise high enough to close the control valve. This control valve contains a float that rises to seal the large diameter vent path to the EVAP canister. At this point in the refueling process, fuel tank pressure increases, the check valve closes (preventing liquid fuel from spiting back at the operator), and fuel then rises up the fuel filler tube to shut off the dispensing nozzle.

PUMP-NATURAL VAC LEAK DETECTION

DESCRIPTION

Vehicles equipped with an NGC Powertrain Control Module (PCM) use a Natural Vacuum Leak Detection (NVLD) pump and system. Vehicles equipped with a JTEC PCM use an LDP (Leak Detection Pump). Refer to Leak Detection Pump (LDP) for additional information.

The NVLD pump is located in the same area as the leak detection pump. Refer to NVLD Removal / Installation for additional information.

OPERATION

The Natural Vacuum Leak Detection (NVLD) system is the next generation evaporative leak detection system that will first be used on vehicles equipped with the Next Generation Controller (NGC). This new system replaces the leak detection pump as the method of evaporative system leak detection. This is to detect a leak equivalent to a 0.020″ (0.5 mm) hole. This system has the capability to detect holes of this size very dependably.

The basic leak detection theory employed with NVLD is the ″Gas Law″. This is to say that the pressure in a sealed vessel will change if the temperature of the gas in the vessel changes. The vessel will only see this effect if it is indeed sealed. Even small leaks will allow the pressure in the vessel to come to equilibrium with the ambient pressure. In addition to the detection of very small leaks, this system has the capability of detecting medium as well as large evaporative system leaks.

A vent valve seals the canister vent during engine off conditions. If the vapor system has a leak of less than the failure threshold, the evaporative system will be pulled into a vacuum, either due to the cool down from operating temperature or diurnal ambient temperature cycling. The diurnal effect is considered one of the primary contributors to the leak determination by this diagnostic. When the vacuum in the system exceeds about 1″ H2O (0.25 KPA), a vacuum switch closes. The switch closure sends a signal to the NGC. The NGC, via appropriate logic strategies, utilizes the switch signal, or lack thereof, to make a determination of whether a leak is present.

The NVLD device is designed with a normally open vacuum switch, a normally closed solenoid, and a seal, which is actuated by both the solenoid and a diaphragm. The NVLD is located on the atmospheric vent side of the canister. The NVLD assembly may be mounted on top of the canister outlet, or in-line between the canister and atmospheric vent filter. The normally open vacuum switch will close with about 1″ H2O (0.25 KPA) vacuum in the evaporative system. The diaphragm actuates the switch. This is above the opening point of the fuel inlet check valve in the fill tube so cap off leaks can be detected. Submerged fill systems must have recirculation lines that do not have the in-line normally closed check valve that protects the system from failed nozzle liquid ingestion, in order to detect cap off conditions.

The normally closed valve in the NVLD is intended to maintain the seal on the evaporative system during the engine off condition. If vacuum in the evaporative system exceeds 3″ to 6″ H2O (0.75 to 1.5 KPA), the valve will be pulled off the seat, opening the seal. This will protect the system from excessive vacuum as well as allowing sufficient purge flow in the event that the solenoid was to become inoperative.

The solenoid actuates the valve to unseal the canister vent while the engine is running. It also will be used to close the vent during the medium and large leak tests and during the purge flow check. This solenoid requires an initial 1.5 amps of current to pull the valve open, but after 100 mili-seconds, will be duty cycled down to an average of about 150 mA for the remainder of the drive cycle.

PUMP-NATURAL VAC LEAK DETECTION (Continued)

Another feature in the device is a diaphragm that will open the seal in the NVLD with pressure in the evaporative system. The device will ″blow off″ at about 0.5″ H2O (0.12 KPA) pressure to permit the venting of vapors during refueling. An added benefit to this is that it will also allow the tank to ″breathe″ during increasing temperatures, thus limiting the pressure in the tank to this low level. This is beneficial because the induced vacuum during a subsequent declining temperature will achieve the switch closed (pass threshold) sooner than if the tank had to decay from a built up pressure.

The device itself has 3 wires: Switch sense, solenoid driver and ground. It also includes a resistor to protect the switch from a short to battery or a short to ground. The NGC utilizes a high-side driver to energize and duty-cycle the solenoid.

REMOVAL

The NVLD pump (5) (Fig. 3) is located at the front of the fuel tank.

(1) Raise and support vehicle.
(2) If equipped, remove fuel tank skid plate.
(3) Disconnect electrical connector at pump.
(4) Carefully remove vapor/vacuum hoses at pump.
(5) The NVLD pump snaps on to a mounting bracket. Press on release tab while sliding pump from bracket.

INSTALLATION

(1) Install NVLD pump to mounting bracket (snaps on).
(2) Carefully install vapor/vacuum lines to NVLD pump. **The vapor/vacuum lines and hoses must be firmly connected. Check the vapor/vacuum lines at the NVLD pump, filter and EVAP canister purge solenoid for damage or leaks. If a leak is present, a Diagnostic Trouble Code (DTC) may be set.**
(3) Connect electrical connector to pump.
(4) If equipped, install fuel tank skid plate.

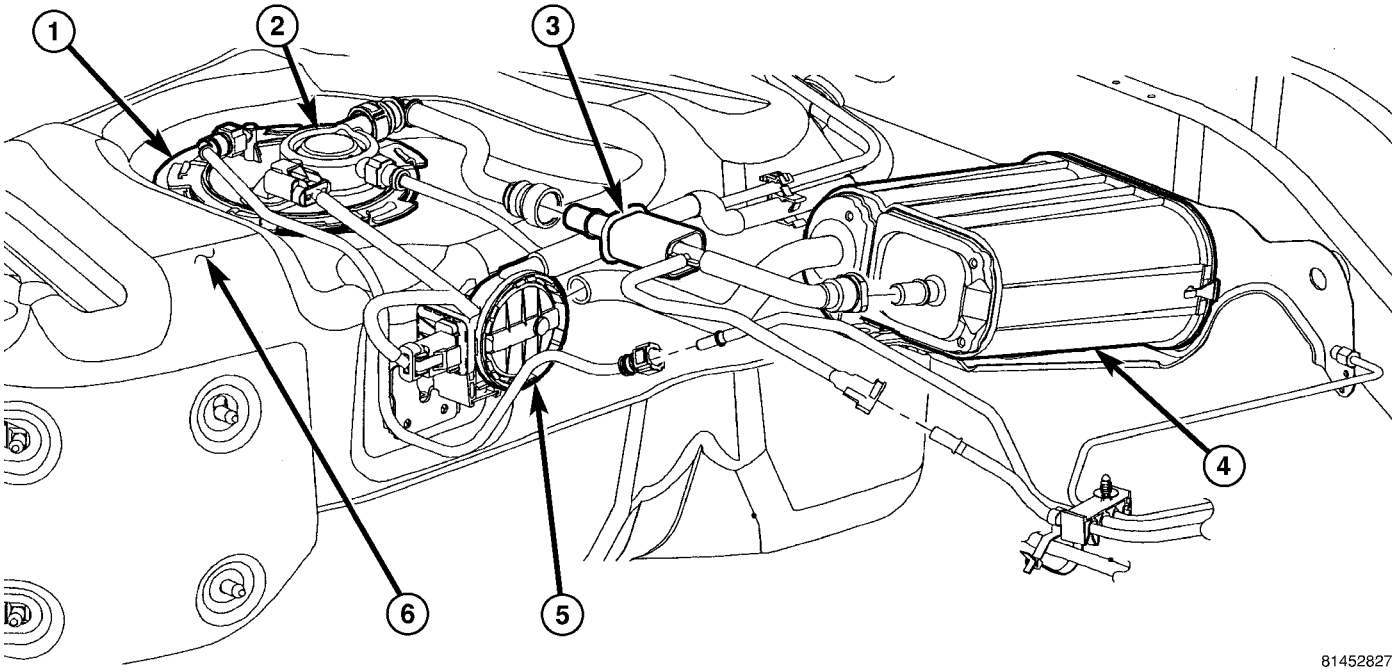

Fig. 3 FUEL DELIVERY COMPONENTS

1 - FUEL PUMP MODULE LOCK RING
2 - FUEL PUMP MODULE
3 - ISOLATOR SLEEVE
4 - EVAP CANISTER
5 - NVLD PUMP
6 - FUEL TANK

PCV VALVE

DESCRIPTION

2.4L

The 2.4L 4-cylinder engine is equipped with a closed crankcase ventilation system and a Positive Crankcase Ventilation (PCV) valve.

This system consists of:

- a PCV valve attached to the left/front side of the valve cover (Fig. 4). It is secured with 1 bolt. An o-ring is used to seal valve to valve cover (Fig. 5).
- the air cleaner housing
- tubes and hoses to connect the system components.

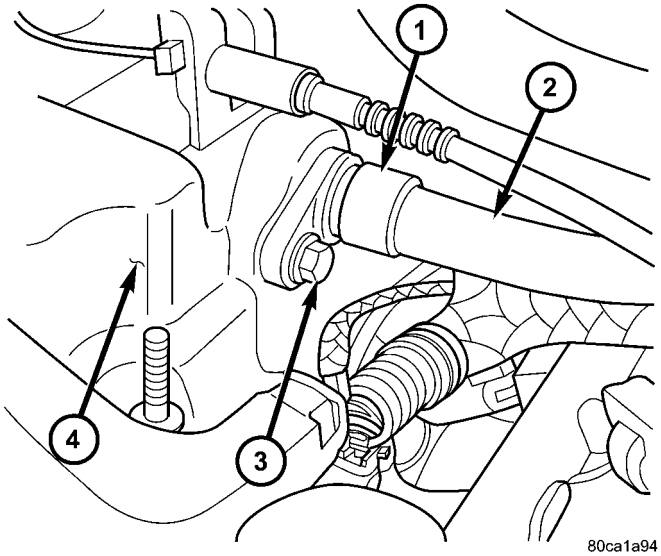

Fig. 4 PCV VALVE LOCATION - 2.4L

1 - PCV VALVE
2 - HOSE
3 - MOUNTING BOLT
4 - VALVE COVER (LEFT SIDE)

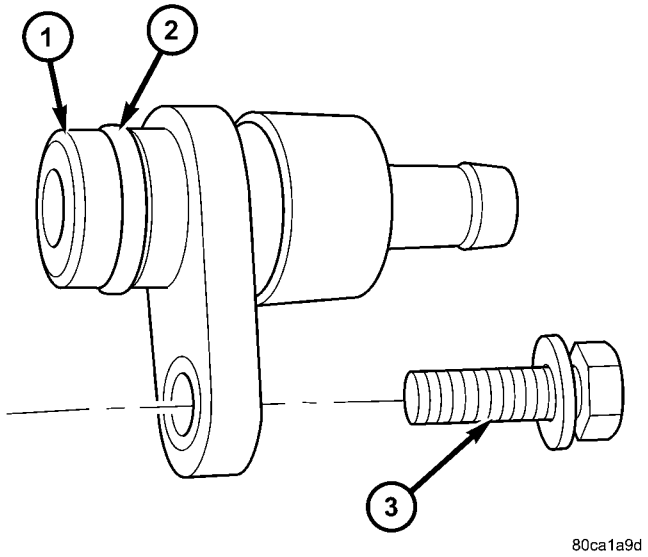

Fig. 5 PCV VALVE AND O-RING - 2.4L

1 - PCV VALVE
2 - O-RING
3 - MOUNTING BOLT

3.7L

The 3.7L V-6 engine is equipped with a closed crankcase ventilation system and a Positive Crankcase Ventilation (PCV) valve.

This system consists of:

- a PCV valve mounted to the oil filler housing (Fig. 6). The PCV valve is sealed to the oil filler housing with an o-ring.
- the air cleaner housing

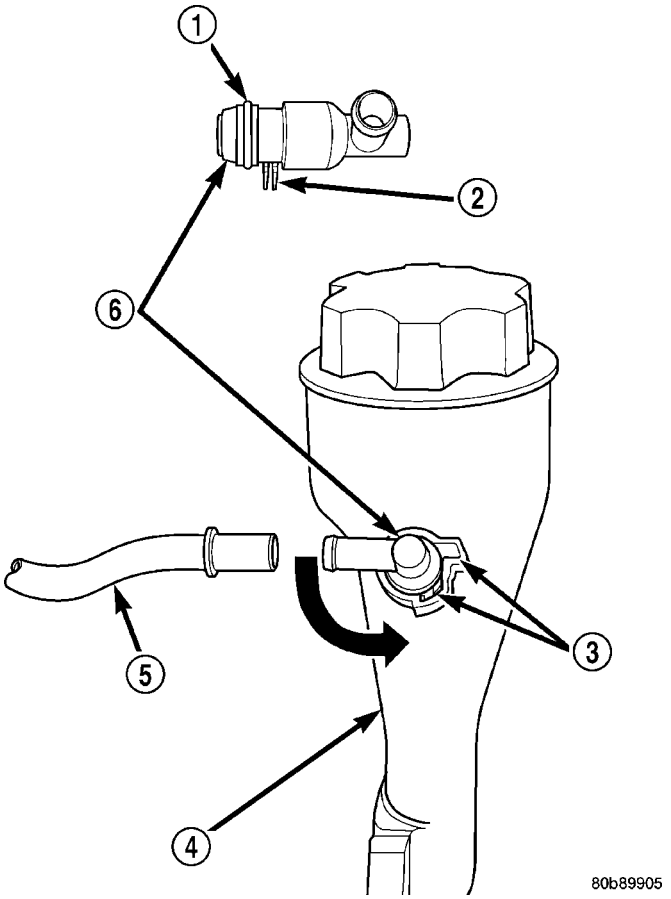

Fig. 6 PCV VALVE - 3.7L

1 - O-RING
2 - LOCATING TABS
3 - CAM LOCK
4 - OIL FILLER TUBE
5 - PCV LINE/HOSE
6 - PCV VALVE

PCV VALVE (Continued)

• two interconnected breathers threaded into the rear of each cylinder head (Fig. 7).

• tubes and hoses to connect the system components.

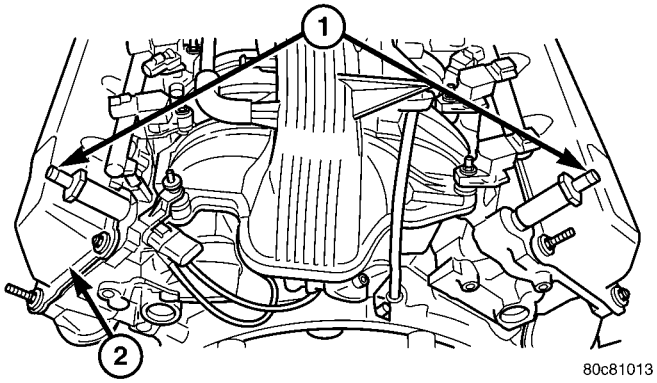

Fig. 7 CRANKCASE BREATHERS (2) - 3.7L

1 - CRANKCASE BREATHERS (2)
2 - REAR OF ENGINE

OPERATION

The PCV system operates by engine intake manifold vacuum. Filtered air is routed into the crankcase through the air cleaner hose and crankcase breather(s) (if used). The metered air, along with crankcase vapors, are drawn through the PCV valve and into a passage in the intake manifold. The PCV system manages crankcase pressure and meters blow-by gases to the intake system, reducing engine sludge formation.

The PCV valve contains a spring loaded plunger. This plunger meters the amount of crankcase vapors routed into the combustion chamber based on intake manifold vacuum.

TYPICAL PCV valves are shown in (Fig. 8), (Fig. 9) and (Fig. 10).

When the engine is not operating, or during an engine pop-back, the spring forces the plunger back against the seat (Fig. 8). This will prevent vapors from flowing through the valve.

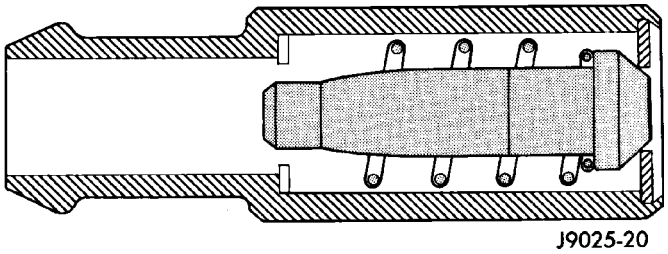

Fig. 8 Engine Off or Engine Pop-Back—No Vapor Flow

During periods of high manifold vacuum, such as idle or cruising speeds, vacuum is sufficient to completely compress spring. It will then pull the plunger to the top of the valve (Fig. 9). In this position there is minimal vapor flow through the valve.

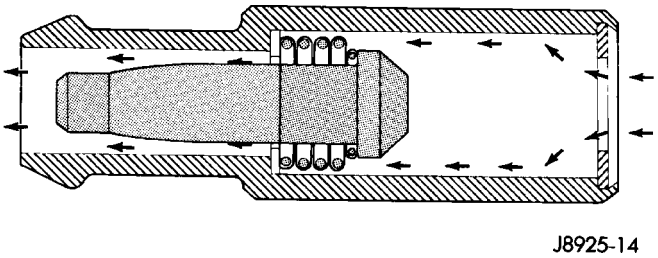

Fig. 9 High Intake Manifold Vacuum—Minimal Vapor Flow

During periods of moderate manifold vacuum, the plunger is only pulled part way back from inlet. This results in maximum vapor flow through the valve (Fig. 10).

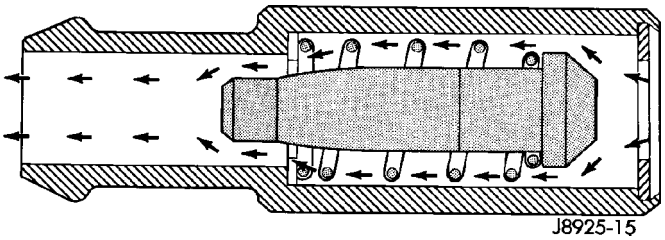

Fig. 10 Moderate Intake Manifold Vacuum—Maximum Vapor Flow

DIAGNOSIS AND TESTING - PCV VALVE

3.7L

(1) Disconnect PCV line/hose (Fig. 6) by disconnecting rubber connecting hose at PCV valve fitting.

(2) Remove PCV valve at oil filler tube by rotating PCV valve downward until locating tabs have been freed at cam lock (Fig. 6). After tabs have cleared, pull valve straight out from filler tube. **To prevent damage to PCV valve locating tabs, valve must be pointed downward for removal. Do not force valve from oil filler tube.**

(3) After valve is removed, check condition of valve o-ring (Fig. 6). Also, PCV valve should rattle when shaken.

(4) Reconnect PCV valve to its connecting line/hose.

(5) Start engine and bring to idle speed.

(6) If valve is not plugged, a hissing noise will be heard as air passes through valve. Also, a strong vacuum should be felt with a finger placed at valve inlet.

(7) If vacuum is not felt at valve inlet, check line/hose for kinks or for obstruction. If necessary, clean out intake manifold fitting at rear of manifold. Do this by turning a 1/4 inch drill (by hand) through the fitting to dislodge any solid particles. Blow out the

PCV VALVE (Continued)

fitting with shop air. If necessary, use a smaller drill to avoid removing any metal from the fitting.

(8) **Do not attempt to clean the old PCV valve.**

(9) Return PCV valve back to oil filler tube by placing valve locating tabs (Fig. 6) into cam lock. Press PCV valve in and rotate valve upward. A slight click will be felt when tabs have engaged cam lock. Valve should be pointed towards rear of vehicle.

(10) Connect PCV line/hose and connecting rubber hose to PCV valve.

(11) Disconnect rubber hose from fresh air fitting at air cleaner resonator box. Start engine and bring to idle speed. Hold a piece of stiff paper (such as a parts tag) loosely over the opening of the disconnected rubber hose.

(12) The paper should be drawn against the hose opening with noticeable force. This will be after allowing approximately one minute for crankcase pressure to reduce.

(13) If vacuum is not present, disconnect each PCV system hose at top of each crankcase breather (Fig. 7). Check for obstructions or restrictions.

(14) If vacuum is still not present, remove each PCV system crankcase breather (Fig. 7) from each cylinder head. Check for obstructions or restrictions. If plugged, replace breather. Tighten breather to 12 N·m (106 in. lbs.) torque. Do not attempt to clean breather

(15) If vacuum is still not present, disconnect each PCV system hose at each fitting and check for obstructions or restrictions.

REMOVAL

2.4L

The PCV valve is attached to the left/front side of the valve cover (Fig. 4). It is secured with 1 bolt. An o-ring is used to seal valve to valve cover (Fig. 5).

(1) Remove hose from valve (Fig. 4). Check condition of hose.

(2) Remove 1 bolt.

(3) Remove PCV valve from valve cover.

(4) Check condition of valve o-ring.

3.7L

The PCV valve is located on the oil filler tube (Fig. 11). Two locating tabs are located on the side of the valve (Fig. 11). These 2 tabs fit into a cam lock in the oil filler tube. An o-ring seals the valve to the filler tube.

(1) Disconnect PCV line/hose (Fig. 11) by disconnecting rubber hose at PCV valve fitting.

(2) Remove PCV valve at oil filler tube by rotating PCV valve downward (counter-clockwise) until locating tabs have been freed at cam lock (Fig. 11). After tabs have cleared, pull valve straight out from filler tube. **To prevent damage to PCV valve locating tabs, valve must be pointed downward for removal. Do not force valve from oil filler tube.**

(3) After valve is removed, check condition of valve o-ring (Fig. 11).

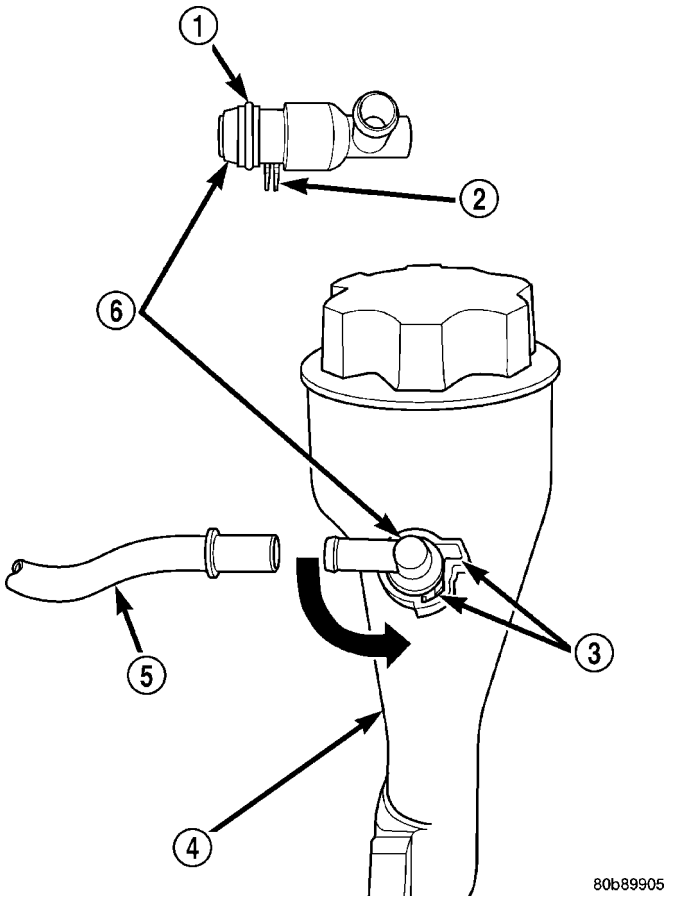

Fig. 11 PCV VALVE/OIL FILLER TUBE LOCATION - 3.7L V-6 / 4.7L V-8

1 - O-RING
2 - LOCATING TABS
3 - CAM LOCK
4 - OIL FILLER TUBE
5 - PCV LINE/HOSE
6 - PCV VALVE

INSTALLATION

2.4L

(1) Check condition of PCV valve o-ring.

(2) Install PCV valve into valve cover.

(3) Install PCV valve mounting bolt.

(4) Install hose to valve.

3.7L

The PCV valve is located on the oil filler tube. Two locating tabs are located on the side of the valve. These 2 tabs fit into a cam lock in the oil filler tube. An o-ring seals the valve to the filler tube.

PCV VALVE (Continued)

(1) Return PCV valve back to oil filler tube by placing valve locating tabs into cam lock. Press PCV valve in and rotate valve upward. A slight click will be felt when tabs have engaged cam lock. Valve should be pointed towards rear of vehicle.

(2) Connect PCV line/hose and rubber hose to PCV valve.

VACUUM LINES

DESCRIPTION

A vacuum schematic for emission related items can be found on the VECI label. Refer to Vehicle Emission Control Information (VECI) Label for label location.

VAPOR CANISTER

DESCRIPTION

A maintenance free, EVAP canister is used on all gasoline powered models. The EVAP canister (4) is located near the left/front corner of the fuel tank (Fig. 12).

OPERATION

The EVAP canister is filled with granules of an activated carbon mixture. Fuel vapors entering the EVAP canister are absorbed by the charcoal granules.

The canister serves two functions: as a temporary fuel vapor storage point while refueling the vehicle for the ORVR system, as a temporary vapor storage point while the engine is running.

Fuel tank pressure vents into the EVAP canister. Fuel vapors are temporarily held in the canister until they can be drawn into the intake manifold. The duty cycle EVAP canister purge solenoid allows the EVAP canister to be purged at predetermined times and at certain engine operating conditions.

Refer to ORVR for additional information.

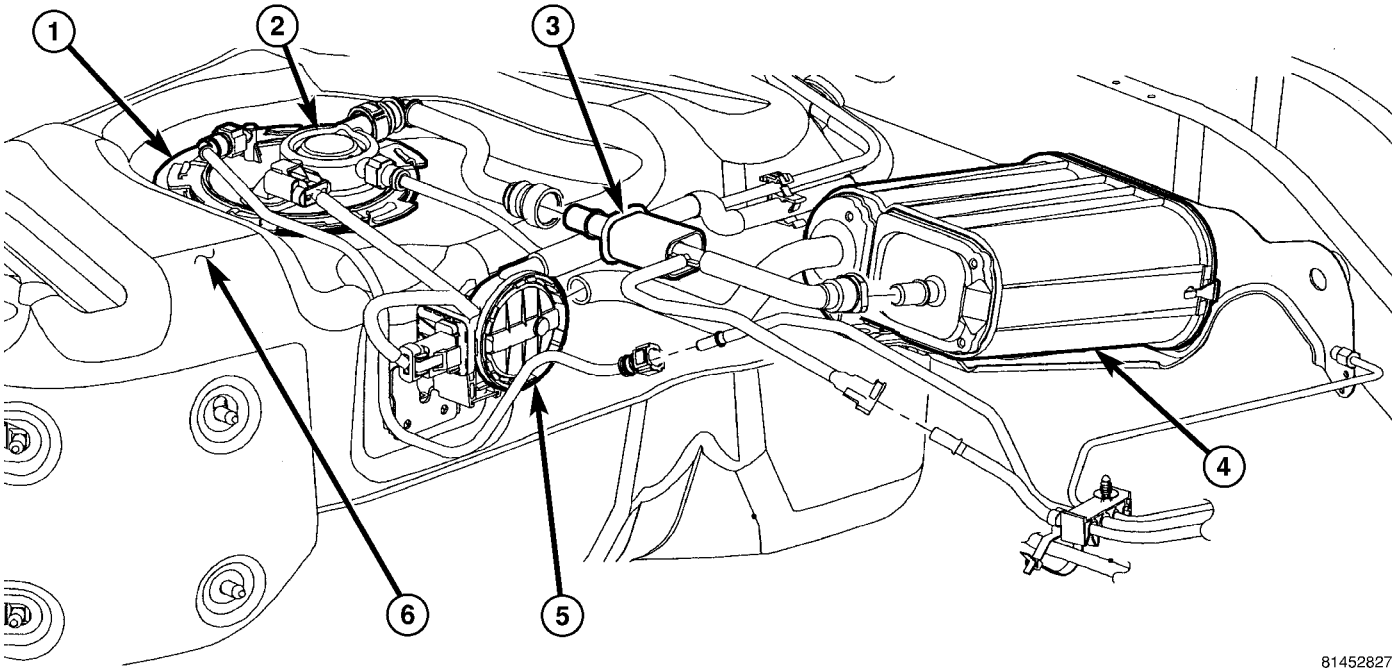

Fig. 12 FUEL DELIVERY COMPONENTS

1 - FUEL PUMP MODULE LOCK RING
2 - FUEL PUMP MODULE
3 - ISOLATOR SLEEVE
4 - EVAP CANISTER
5 - NVLD PUMP
6 - FUEL TANK

VAPOR CANISTER (Continued)

REMOVAL

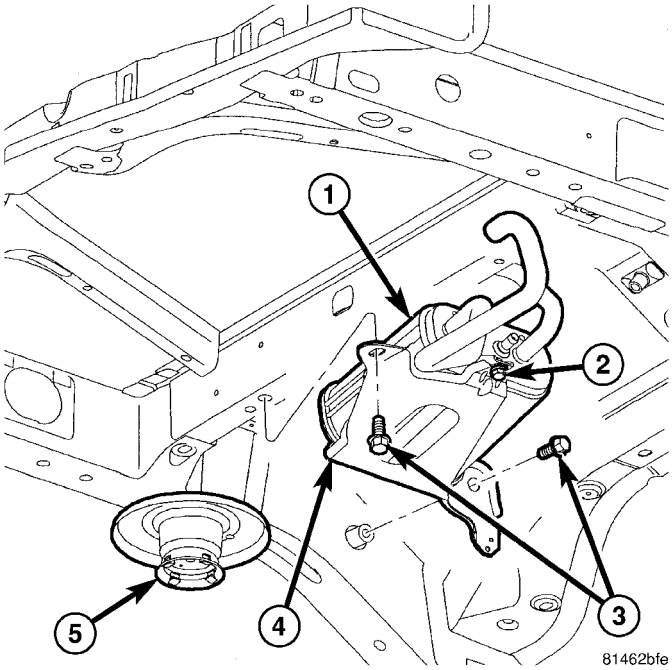

Fig. 13 EVAP CANISTER LOCATION

1 - EVAP CANISTER
2 - BOLT, CANISTER-TO-MOUNTING-BRACKET
3 - BOLTS, MOUNTING BRACKET-TO-BODY
4 - MOUNTING BRACKET
5 - LEFT/REAR SPRING PERCH

The EVAP canister (1) is located near front of fuel tank and next to the left/rear spring perch (5) (Fig. 13).

(1) Raise vehicle.

(2) Disconnect vacuum hoses/lines at EVAP canister. Note location of lines before removal.

(3) Remove EVAP canister (1) and mounting bracket assembly (4) (Fig. 13) from body (2 bolts) (Fig. 13).

(4) Remove canister-to-mounting bracket bolt (2) (Fig. 13).

(5) Slide 2 canister mounting pins (1) from mounting bracket (2) (Fig. 14).

INSTALLATION

(1) Slide two canister mounting pins (1) into mounting bracket (2) (Fig. 15).

(2) Install canister-to-mounting bracket bolt (2) (Fig. 16).

(3) Position canister and bracket assembly to body.

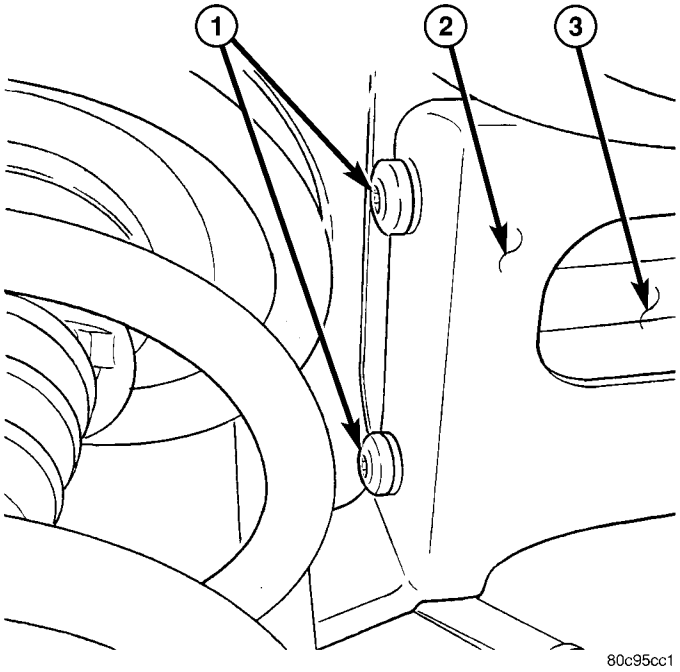

Fig. 14 EVAP CANISTER MOUNTING PINS

1 - MOUNTING PINS
2 - MOUNTING BRACKET
3 - EVAP CANISTER

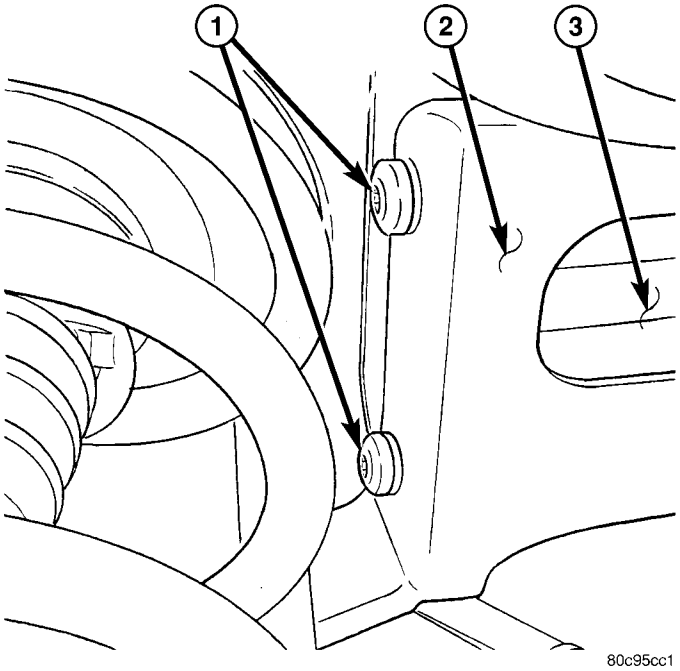

Fig. 15 EVAP CANISTER MOUNTING PINS

1 - MOUNTING PINS
2 - MOUNTING BRACKET
3 - EVAP CANISTER

VAPOR CANISTER (Continued)

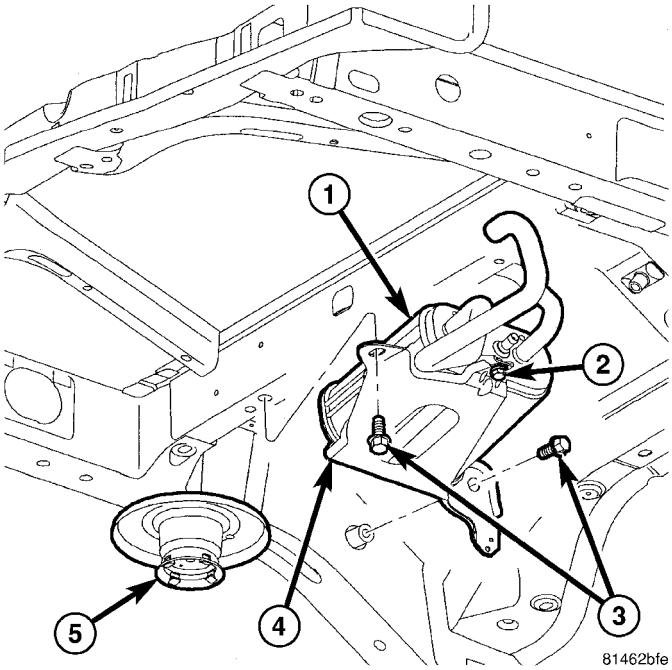

Fig. 16 EVAP CANISTER LOCATION

1 - EVAP CANISTER
2 - BOLT, CANISTER-TO-MOUNTING-BRACKET
3 - BOLTS, MOUNTING BRACKET-TO-BODY
4 - MOUNTING BRACKET
5 - LEFT/REAR SPRING PERCH

(4) Install two mounting bracket bolts (3) (Fig. 16). Tighten to 47 N·m (35 ft. lbs.) torque.

(5) Carefully install vapor/vacuum lines to EVAP canister **The vapor/vacuum lines and hoses must be firmly connected. Also check the vapor/vacuum lines at the NVLD pump, filter and EVAP canister purge solenoid for damage or leaks. If a leak is present, a Diagnostic Trouble Code (DTC) may be set.**

(6) Lower vehicle.

EXHAUST GAS RECIRCULATION

TABLE OF CONTENTS

	page
EXHAUST GAS RECIRCULATION	
DESCRIPTION	23
OPERATION	23
SPECIFICATIONS - TORQUE	24
VALVE	
DESCRIPTION	25
OPERATION	25
REMOVAL	26
INSTALLATION	26
EGR VALVE COOLER	
DESCRIPTION	26
REMOVAL	26
INSTALLATION	26
EGR AIR FLOW CONTROL VALVE	
DESCRIPTION	27
OPERATION	28
REMOVAL	28
INSTALLATION	29

EXHAUST GAS RECIRCULATION

DESCRIPTION

The task of the Exhaust Gas Recirculation (EGR) is to regulate the fresh air supply to the engine by means of the exhaust gas recirculation system, in favor of clean combustion. The EGR system reduces oxides of nitrogen (NOx) in the engine exhaust. This is accomplished by allowing a predetermined amount of hot exhaust gas to recirculate and dilute the incoming charge air.

A malfunctioning EGR system can cause engine stumble, sags, or hesitation, rough idle, engine stalling and poor driveability.

OPERATION

The system consists of:

- A EGR valve assembly. The valve is located on the left side of the engine below the intake manifold.
- A EGR Cooler. The cooler is located on the left side of the engine below the intake manifold.
- A EGR air flow control valve. The EGR air flow control valve is located in the air inlet between the charge air inlet and the intake manifold. The air control valve is used to increase the EGR flow rate at low engine speeds.
- The ECM operates and monitors the EGR valve and air flow control valve. The ECM is located in the left-rear side of the engine compartment (Fig. 1).

The ECM will monitor and determine the positioning of the EGR valve and air control valve by internal programming defined during engine development. This will depend on inputs from the engine coolant temperature, engine load, fuel quantity, throttle position and engine speed sensors. The air control valve blends the incoming charge air and the cooled and recirculated EGR gasses, to be used again in the combustion chamber.

Exhaust gas recirculation will begin in this order when:

- The ECM determines that EGR system operation is necessary.
- The inlet seat (poppet valve) at the bottom of the EGR valve opens to dilute and recirculate exhaust gas back into the intake manifold.
- The EGR Cooler further cools the hot exhaust gasses before recirculation

The EGR system will be shut down by the ECM after 60 seconds of continuous engine idling to improve idle quality and the air flow control valve will close completely when the vehicle is shut off to assist with engine shake on shut down.

EXHAUST GAS RECIRCULATION (Continued)

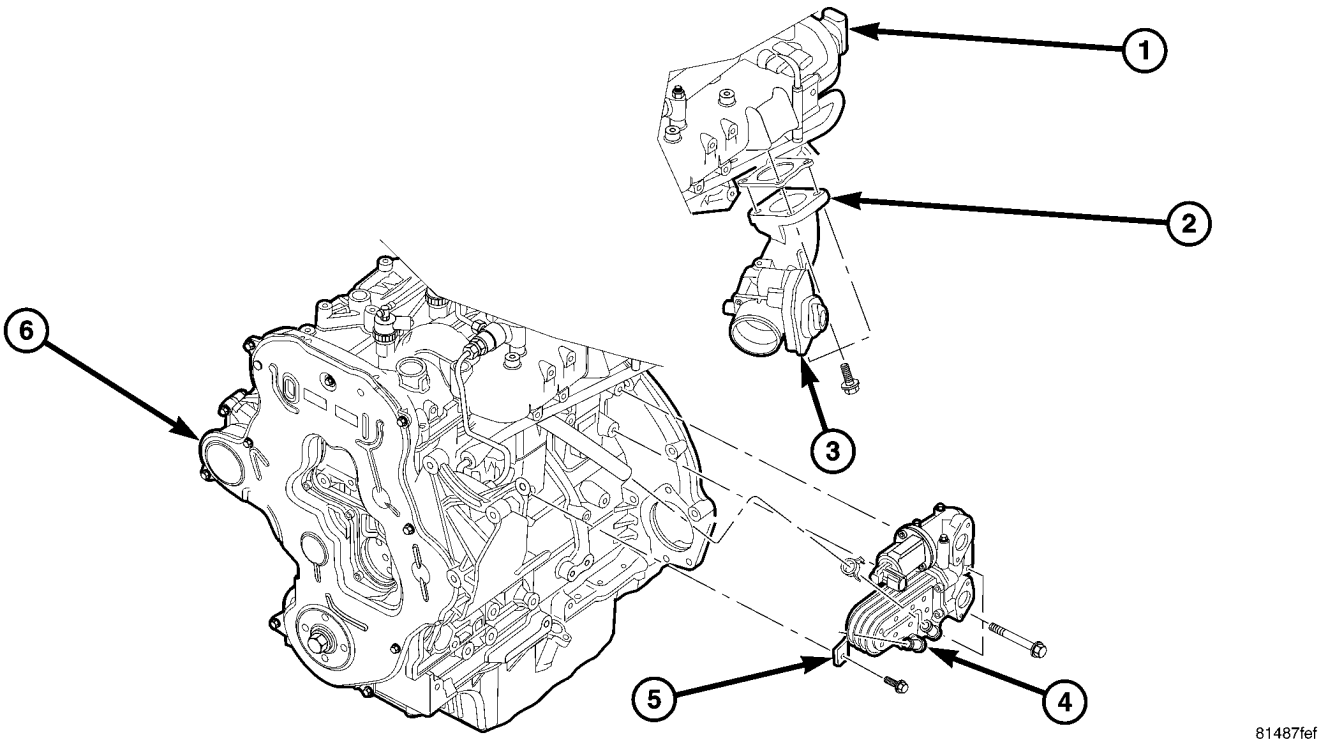

Fig. 1 EGR AND AIR CONTROL VALVE

1 - REAR OF INTAKE MANIFOLD
2 - AIR INLET ELBOW
3 - EGR AIR CONTROL VALVE
4 - EGR VALVE COOLER
5 - EGR VALVE
6 - ENGINE

SPECIFICATIONS - TORQUE

2.8L DIESEL - TORQUE SPECIFICATIONS

DESCRIPTION	N·m	Ft. Lbs.	In. Lbs.
EGR Pipe to Housing Bolts	32.4	24	—
EGR Cooler to Housing Bolts	10.8	—	95
EGR Pipe to Air Inlet Valve Clamp	7	—	62
EGR Valve to Housing Bolts	10.8	—	95

VALVE

DESCRIPTION

The EGR system consists of :

- EGR valve
- Air Control Valve
- EGR cooler

The EGR valve and cooler are located under the intake manifold toward the left rear of the engine. The air control valve is located in the charge air inlet before the intake manifold (Fig. 2).

OPERATION

The EGR system reduces oxides of nitrogen (NOx) in engine exhaust. Formation of NOx increases proportionally with combustion temperature. To reduce the emission of these oxides, the cylinder temperature must be lowered. The system allows a predetermined amount of hot exhaust gas to recirculate and dilute the incoming charge air. The diluted air mixture reduces peak flame temperature during combustion. The EGR cooler further reduces these temperatures.

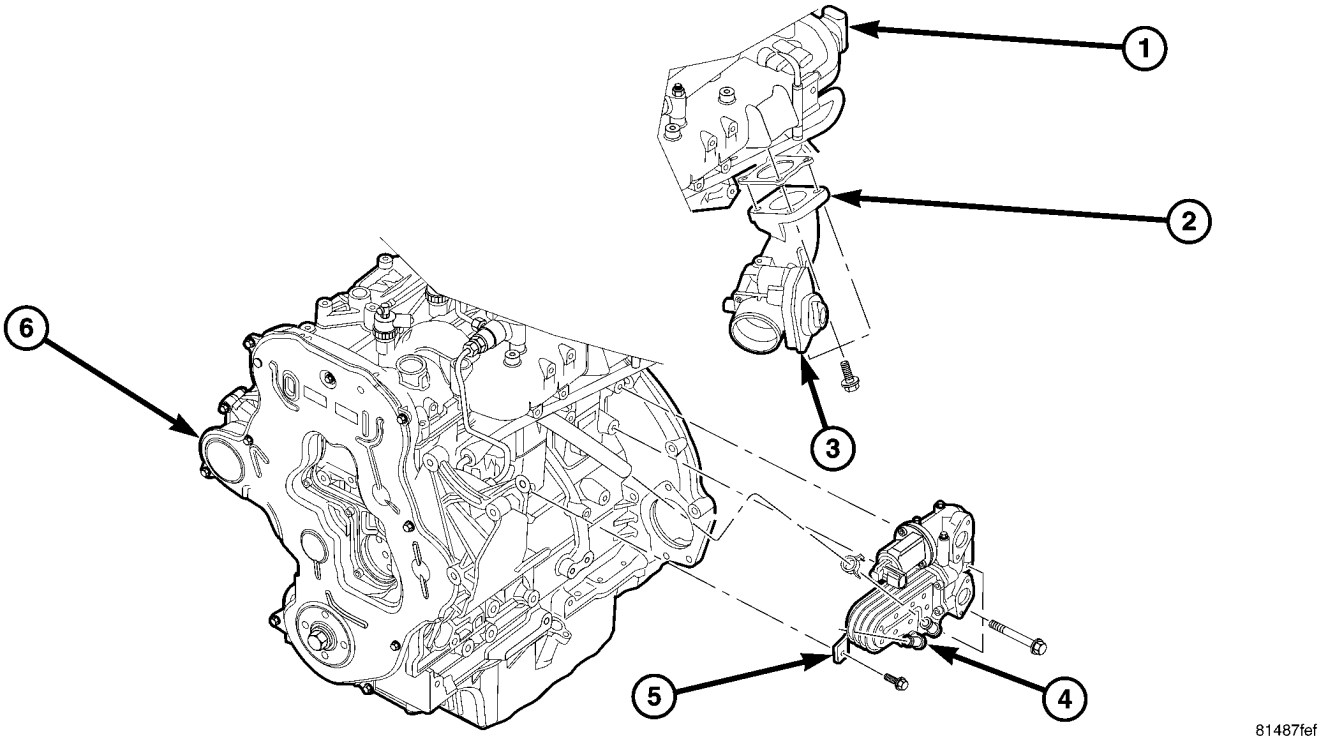

Fig. 2 EGR AND AIR CONTROL VALVE

1 - REAR OF INTAKE MANIFOLD
2 - AIR INLET ELBOW
3 - EGR AIR CONTROL VALVE
4 - EGR VALVE COOLER
5 - EGR VALVE
6 - ENGINE

VALVE (Continued)

REMOVAL

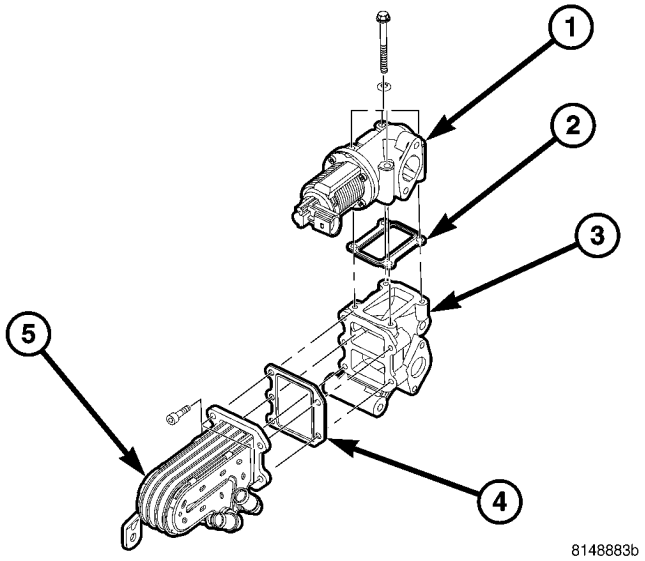

Fig. 3 EGR VALVE HOUSING AND COOLER

1 - EGR VALVE
2 - GASKET
3 - HOUSING
4 - GASKET
5 - EGR COOLER

(1) Disconnect the negative battery cable.
(2) Remove engine cover.
(3) Drain cooling system.
(4) Disconnect the electrical connector at EGR valve.
(5) Disconnect coolant hoses at EGR valve and cooler (Fig. 3)
(6) Disconnect tube at the EGR valve housing (Fig. 3).
(7) Remove EGR valve housing to engine block fasteners (Fig. 3).
(8) Remove EGR valve and cooler assembly from vehicle (Fig. 3).
(9) Remove EGR valve to cooler retaining bolts and separate EGR valve from cooler.

INSTALLATION

(1) Clean all gasket mating surfaces.
(2) Assemble EGR valve and cooler to housing with new gasket. Torque bolts to 10.8N·m (95 in.lbs.) (Fig. 4).
(3) Install EGR valve/cooler assembly. Tighten fasteners to 24.5 N·m (216 in. lbs.).
(4) Install EGR pipe with new gasket to EGR assembly. Torque bolts to 32.4N·m (24 ft.lbs).

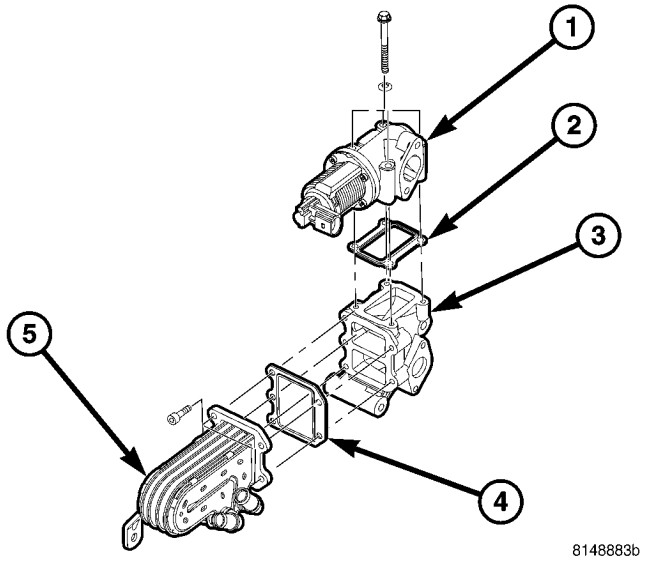

Fig. 4 EGR VALVE HOUSING AND COOLER

1 - EGR VALVE
2 - GASKET
3 - HOUSING
4 - GASKET
5 - EGR COOLER

(5) Tighten EGR pipe clamps to 7 N·m (62 in. lbs.).
(6) Connect the EGR cooler hoses.
(7) Refill cooling system.
(8) Install engine cover.
(9) Connect negative battery cable

EGR VALVE COOLER

DESCRIPTION

Refer to the EGR valve operation for EGR cooler description (Refer to 25 - EMISSIONS CONTROL/ EXHAUST GAS RECIRCULATION - OPERATION)

REMOVAL

(1) (Refer to 25 - EMISSIONS CONTROL/EXHAUST GAS RECIRCULATION/VALVE - REMOVAL)

INSTALLATION

(1) (Refer to 25 - EMISSIONS CONTROL/EXHAUST GAS RECIRCULATION/VALVE - INSTALLATION)

EGR AIR FLOW CONTROL VALVE

DESCRIPTION

The EGR air flow control valve is located between the incoming charge air and the intake manifold. It is used to increase the EGR flow rate at low engine loads. The valve is never totally closed, but the valve position depends on the exhaust gas quantity that needs to be recirculated with in the emission target (Fig. 5).

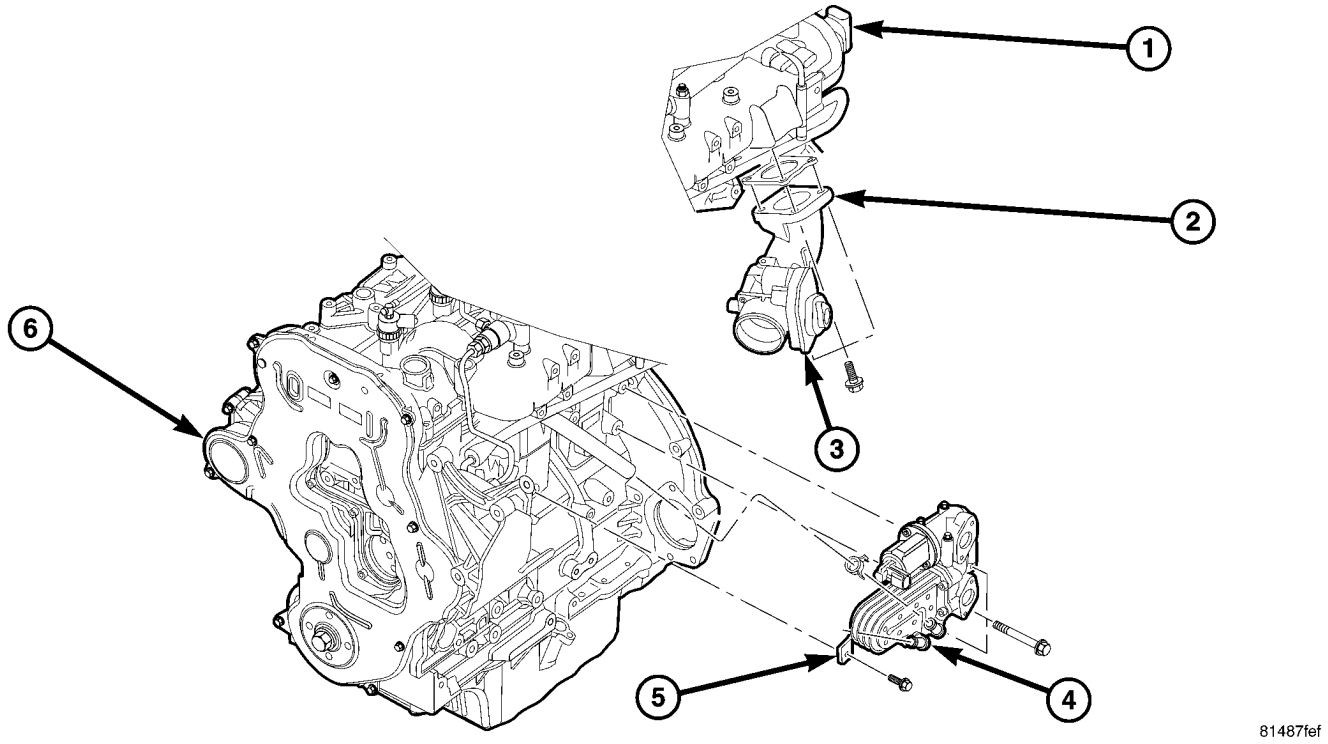

Fig. 5 EGR AND AIR CONTROL VALVE

1 - REAR OF INTAKE MANIFOLD
2 - AIR INLET ELBOW
3 - EGR AIR CONTROL VALVE
4 - EGR VALVE COOLER
5 - EGR VALVE
6 - ENGINE

EGR AIR FLOW CONTROL VALVE (Continued)

OPERATION

The EGR air flow control valve is a pluse width modulated control valve that is operated by the ECM in line with the EGR flow quantity required to remain inside the emissions target (Fig. 6).

REMOVAL

(1) Disconnect the negative battery cable.

(2) Disconnect the EGR air control valve wiring harness connector.

(3) Disconnect the charge air inlet hose.

(4) Remove the generator to intake manifold support bracket.

(5) Separate the oil level indicator tube and the vacuum pipe from the air control valve.

(6) Disconnect the EGR tube connected to the back of the air control valve.

(7) Remove the air control valve fasteners and the control valve assembly (Fig. 7).

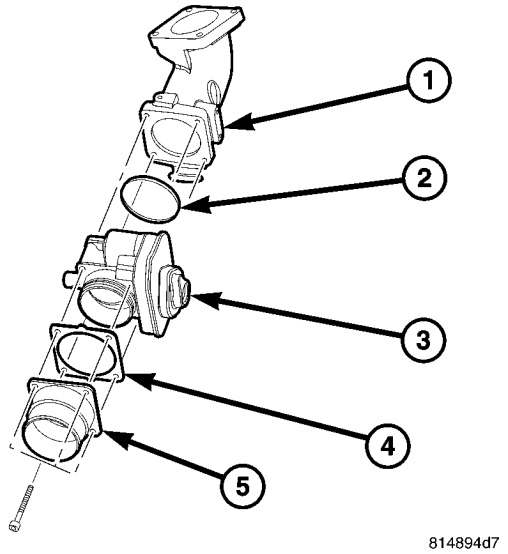

Fig. 7 EGR AIR CONTROL VALVE

1 - AIR INLET ELBOW
2 - SEAL
3 - AIR CONTROL VALVE
4 - GASKET
5 - AIR INLET

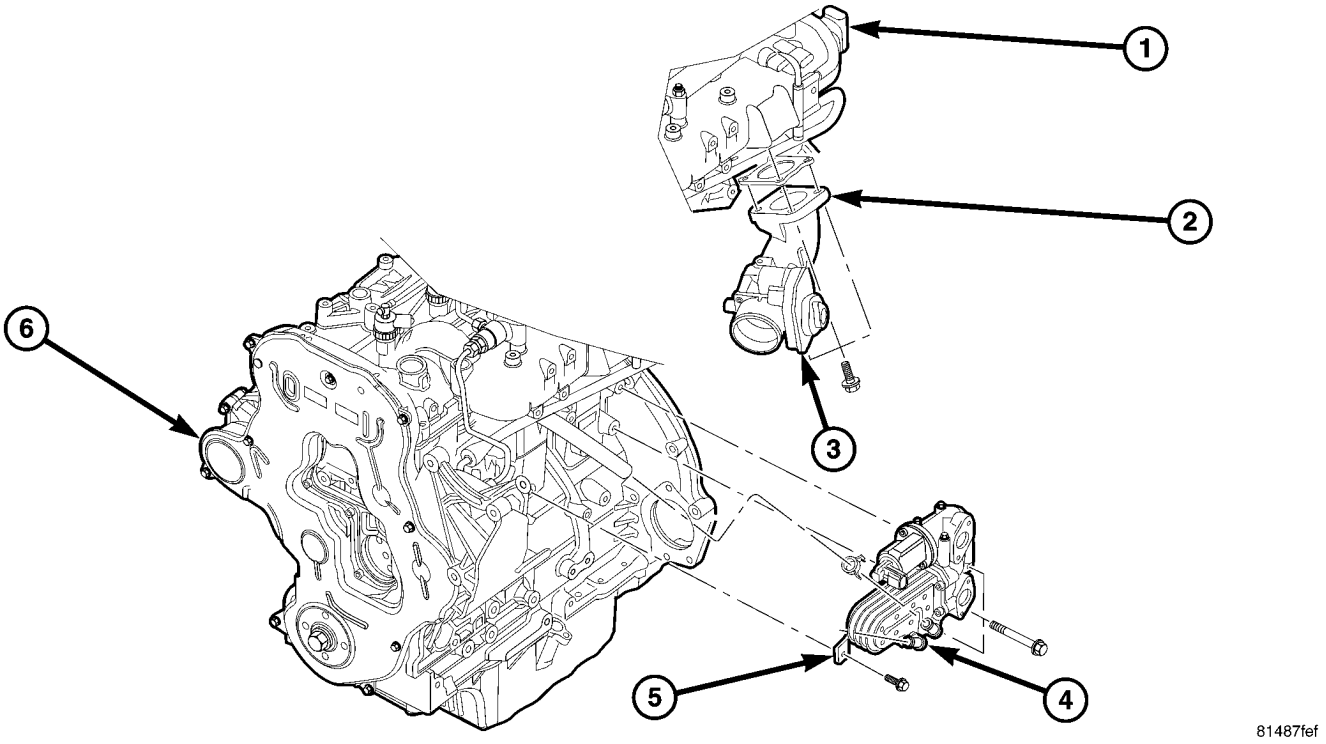

Fig. 6 EGR AND AIR CONTROL VALVE

1 - REAR OF INTAKE MANIFOLD
2 - AIR INLET ELBOW
3 - EGR AIR CONTROL VALVE
4 - EGR VALVE COOLER
5 - EGR VALVE
6 - ENGINE

EGR AIR FLOW CONTROL VALVE (Continued)

INSTALLATION

(1) Clean all gasket mating surfaces.

(2) Install the gasket, seal and the air control valve. Tighten the air control valve fasteners to 10.8 N·m (95 in. lbs.) (Fig. 8).

(3) Install the EGR tube to the back of the air control valve.

(4) Connect the vacuum pipe and oil level indicator tube to the air control valve.

(5) Install the generator to intake support bracket. Tighten fasteners to 32.4 N·m (24 ft. lbs.).

(6) Install the charge air hose. Tighten clamp to 7 N·m (61 in. lbs.).

(7) Connect the wiring harness connector.

(8) Connect the negative battery cable.

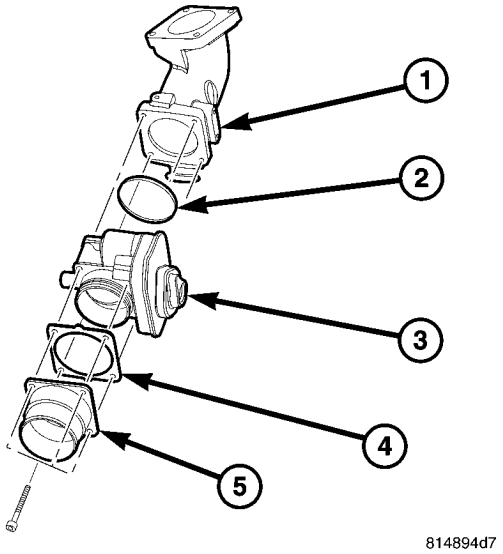

Fig. 8 EGR AIR CONTROL VALVE

1 - AIR INLET ELBOW
2 - SEAL
3 - AIR CONTROL VALVE
4 - GASKET
5 - AIR INLET

Description	Group-Page
A-PILLAR SEAL	23-111
A-PILLAR TRIM AND GRAB HANDLE	23-70
A/C CLUTCH RELAY	24-16
A/C COMPRESSOR CLUTCH	24-11
A/C COMPRESSOR	24-53
A/C CONDENSER	24-56
A/C DISCHARGE LINE	24-57
A/C EVAPORATOR	24-59
A/C HEATER CONTROL	24-17
A/C HIGH PRESSURE SWITCH	24-22
A/C LOW PRESSURE SWITCH	24-23
A/C ORIFICE TUBE	24-60
A/C PRESSURE TRANSDUCER	24-25
ABS INDICATOR	8J-12
ACCELERATOR PEDAL POSITION SENSOR	14-78
ACCELERATOR PEDAL	14-25
ACCESSORY DRIVE	7-16
ACCUMULATOR	21-107
ACCUMULATOR	24-61
ADAPTER HOUSING SEAL	21-107, 21-222
AIR CLEANER ELEMENT	9-22, 9-91, 9-191
AIR CLEANER HOUSING	9-22, 9-191
AIR INLET SEAL	23-114
AIR OUTLETS	24-35
AIRBAG CONTROL MODULE	8O-11
AIRBAG INDICATOR	8J-13
AJAR SWITCH	8L-79
AMBIENT TEMP SENSOR	8M-14
AMPLIFIER CHOKE AND RELAY	8A-4
ANTENNA BODY & CABLE	8A-5
ANTENNA CABLE - SATELLITE RADIO	8A-8
ANTENNA MODULE	8A-9
ANTENNA-SATELLITE RADIO	8A-10
ANTILOCK BRAKE MODULE	8E-2
ASH RECEIVER LAMP	8L-80
ASSEMBLY	23-115
ASSIST HANDLE	23-71
AUDIO/VIDEO	8A-1
AUTO SHUT DOWN RELAY	8I-4
AUTOMATIC DAY / NIGHT MIRROR	8N-11
AUTOMATIC TRANSMISSION - 42RLE	21-39
AUTOMATIC TRANSMISSION - 545RFE	21-169
B-PILLAR LOWER TRIM	23-71
B-PILLAR UPPER TRIM	23-71
BACKUP LAMP SWITCH	8L-19
BALANCE SHAFT CARRIER	9-70
BALANCE SHAFT CHAIN	9-71
BALANCE SHAFT	9-153, 9-245
BALANCE SHAFTS AND CARRIER ASSEMBLY	9-66
BASE COAT/CLEAR COAT FINISH	23-77
BATTERY CABLES	8F-18
BATTERY HOLDDOWN	8F-18
BATTERY SYSTEM	8F-1
BATTERY TEMPERATURE SENSOR	8F-24
BATTERY TRAY	8F-21
BATTERY	8F-6
BEARING-AXLE	3-41, 3-68
BEARING-DIFFERENTIAL CASE	3-46, 3-75
BEARINGS	21-108
BELT TENSION SENSOR	8O-15
BELT TENSIONERS	7-18
BLEND DOOR ACTUATOR	24-26
BLEND DOOR	24-36
BLOWER MOTOR RELAY	24-28
BLOWER MOTOR RESISTOR	24-29
BLOWER MOTOR	24-37
BODY CONTROL MODULE	8E-5
BODY SIDE MOLDINGS	23-47
BODY	23-1
BOOST PRESSURE SENSOR	14-78
BRAKE JUNCTION BLOCK	5-21
BRAKE LAMP SWITCH	8L-19
BRAKE LINES	5-8
BRAKE PADS / SHOES	5-11
BRAKE TRANSMISSION SHIFT INTERLOCK MECHANISM	21-108
BRAKE TRANSMISSION SHIFT INTERLOCK SYSTEM	21-222
BRAKE/PARK BRAKE INDICATOR	8J-14
BRAKES - ABS	5-41
BRAKES - BASE	5-2
BUSHINGS	2-10, 2-26
CABIN HEATER	24-69
CABLE	8P-3
CABLES	5-33
CAMSHAFT OIL SEAL(S)	9-26, 9-199
CAMSHAFT POSITION SENSOR	14-79
CAMSHAFT POSITION SENSOR	8I-5
CAMSHAFT	9-95, 9-107
CAMSHAFT(S)	9-27, 9-200
CARGO LAMP	8L-82
CARPETS AND FLOOR MATS	23-72
CATALYTIC CONVERTER	11-5
CD CHANGER	8A-11
CHARGE AIR COOLER AND PLUMBING	11-9
CHARGING INDICATOR	8J-15
CHARGING SYSTEM	8F-22
CHECK STRAP	23-18, 23-27, 23-42
CHECK VALVE	8R-13
CHILD RESTRAINT ANCHOR	8O-15
CHIME WARNING SYSTEM	8B-1
CIGAR LIGHTER OUTLET	8W-97-2
CLEVIS BRACKET	2-17
CLOCKSPRING	8O-17
CLUSTER BEZEL	23-59
CLUTCH DISC	6-5
CLUTCH PEDAL POSITION SWITCH	6-12
CLUTCH PEDAL	6-10
CLUTCH RELEASE BEARING	6-6
CLUTCH SWITCH OVERRIDE RELAY	6-11
CLUTCH	6-1
COLUMN	19-5
COMBINATION FLASHER	8L-23
COMMUNICATION	8E-10
CONNECTING ROD BEARINGS	9-36
CONNECTOR	8W-01-11
CONNECTOR/GROUND/SPLICE LOCATION	8W-91-1
CONTROL SWITCH	23-109
COOLANT LOW INDICATOR	8J-16
COOLANT RECOVERY CONTAINER	7-24
COOLANT	7-23
COOLING	7-1
COURTESY LAMP	8L-83
COVER - CYLINDER HEAD	9-97, 9-109
COVER-DIFFERENTIAL	3-38, 3-66
COWL GRILLE	23-47
COWL TRIM COVER	23-71
COWL WEATHERSTRIP	23-111
COWL/PLENUM SEAL	23-114
COWL/PLENUM WINDOW BAFFLE SEAL	23-114
CRANKSHAFT MAIN BEARINGS	9-39, 9-119, 9-213
CRANKSHAFT OIL SEAL - FRONT	9-41, 9-120, 9-216
CRANKSHAFT OIL SEAL - REAR	9-43, 9-121, 9-218
CRANKSHAFT POSITION SENSOR	14-25, 14-80
CRANKSHAFT	9-36, 9-116, 9-208
CRUISE INDICATOR	8J-17
CURTAIN AIRBAG	8O-21
CYLINDER HEAD - LEFT	9-91
CYLINDER HEAD - RIGHT	9-102
CYLINDER HEAD COVER	9-29, 9-202
CYLINDER HEAD	9-22, 9-192
CYLINDER LINERS	9-220
DATA LINK CONNECTOR	8E-11
DAYTIME RUNNING LAMP RELAY	8L-23
DEFROSTER DUCT	24-39
DIFFERENTIAL	3-43, 3-71
DIFFERENTIAL-TRAC-LOK	3-74
DIODE	8W-01-14
DISC BRAKE CALIPER ADAPTER	5-18
DISC BRAKE CALIPERS	5-13
DOME LAMP	8L-84
DOOR AJAR INDICATOR	8J-17
DOOR GLASS	23-20, 23-29, 23-97
DOOR LOCK / UNLOCK SWITCH	8N-4
DOOR LOCK MOTOR	8N-5
DOOR LOCK RELAY	8N-6
DOOR LOWER WEATHERSTRIP	23-112
DOOR PRIMARY WEATHERSTRIP	23-111
DOOR SILL SCUFF PLATE	23-71
DOOR	23-19, 23-28
DRAIN TUBE	23-105
DRIVE BELTS	7-19
DRIVE MOTOR	23-108
DRIVER AIRBAG	8O-25
DRIVER HEATED SEAT SWITCH	8G-9
DRIVING CLUTCHES	21-108
EGR AIR FLOW CONTROL VALVE	25-27
EGR VALVE COOLER	25-26
ELECTRICAL	5-43
ELECTRONIC CONTROL MODULES	8E-1
ELECTRONIC VEHICLE INFO CENTER	8M-8
EMISSIONS CONTROL	25-1
ENGINE - 2.4L	9-3
ENGINE - 3.7L	9-74
ENGINE BLOCK HEATER	7-26
ENGINE BLOCK	9-34, 9-114, 9-208
ENGINE CONTROL MODULE-DIESEL ENGINE	8E-13
ENGINE COOLANT TEMPERATURE SENSOR	7-28
ENGINE COOLANT THERMOSTAT	7-29
ENGINE COVER - FRONT	9-230
ENGINE CRADLE CROSSMEMBER	13-6
ENGINE MOUNTING	9-48
ENGINE TEMPERATURE GAUGE	8J-18
ETC INDICATOR	8J-19
EVAP/PURGE SOLENOID	25-14
EVAPORATIVE EMISSIONS	25-11
EXHAUST GAS RECIRCULATION	25-23
EXHAUST MANIFOLD	9-60, 9-242
EXHAUST SYSTEM AND TURBOCHARGER	11-1
EXTENSION HOUSING SEAL	21-109, 21-343
EXTERIOR HANDLE	23-20, 23-30, 23-41
EXTERIOR NAME PLATES	23-48
FASTENER IDENTIFICATION	Intro.-1
FASTENER USAGE	Intro.-4
FINESSE SANDING/BUFFING & POLISHING	23-77
FLEX PLATE	9-123, 9-219
FLIP-UP GLASS - HINGE COVER	23-38
FLIP-UP GLASS - HINGE	23-37
FLIP-UP GLASS LATCH	23-37
FLIP-UP GLASS RELEASE SWITCH	8N-5
FLIP-UP GLASS SUPPORT CYLINDER	23-39
FLIP-UP GLASS	23-36
FLOOR CONSOLE LID LATCH	23-73
FLOOR CONSOLE	23-72
FLOOR DISTRIBUTION DUCT	24-39
FLOW MANAGEMENT VALVE	14-6
FLUID AND FILTER	21-110, 21-223
FLUID CAPACITIES	0-5
FLUID COOLER	19-31
FLUID FILL/CHECK LOCATIONS	0-23
FLUID RESERVOIR	5-31
FLUID TYPES	0-2
FLYWHEEL	6-7
FOG LAMP RELAY	8L-25
FOLDING REAR SEAT BACK LATCH / LOCK	23-95
FRAME	13-3
FRONT AXLE - 186FIA	3-20
FRONT CONTROL MODULE	8E-12
FRONT DOOR INNER BELT WEATHERSTRIP	23-114
FRONT DOOR OUTER BELT MOLDING	23-112
FRONT FASCIA	13-1
FRONT FENDER	23-48
FRONT FOG LAMP INDICATOR	8J-20
FRONT FOG LAMP	8L-27
FRONT MOUNT	9-48, 9-132
FRONT OUTPUT SHAFT SEAL	21-310, 21-343, 21-379
FRONT POSITION LAMP	8L-31
FRONT SKID PLATE	13-6
FRONT TOW HOOK	13-8
FRONT WHEEL OPENING FLARE MOLDINGS	23-53
FRONT WHEEL SPEED SENSOR	5-43
FRONT WHEELHOUSE SPLASH SHIELD	23-51
FUEL DELIVERY - 2.4L/3.7L GAS	14-2
FUEL DELIVERY - 2.8L DIESEL	14-44
FUEL FILL DOOR/HOUSING	23-49
FUEL FILLER CAP	25-14
FUEL FILTER / WATER SEPARATOR	14-52
FUEL FILTER	14-6
FUEL GAUGE	8J-21
FUEL HEATER	14-67
FUEL INJECTION - 2.4L/3.7L GAS	14-24
FUEL INJECTION PUMP	14-61
FUEL INJECTOR	14-28, 14-82
FUEL LEVEL SENDING UNIT / SENSOR	14-6, 14-65
FUEL LINES	14-6, 14-61
FUEL PRESSURE REGULATOR	14-11
FUEL PRESSURE SENSOR	14-86
FUEL PRESSURE SOLENOID	14-86
FUEL PUMP MODULE	14-12

Description	Group-Page
FUEL PUMP RELAY	14-29
FUEL PUMP	14-12
FUEL QUANTITY SOLENOID	14-69
FUEL RAIL	14-14, 14-59
FUEL TANK MODULE	14-74
FUEL TANK SKID PLATE	13-8
FUEL TANK	14-18, 14-70
FUEL TEMPERATURE SENSOR	14-89
GAP AND FLUSH	23-225
GATE AJAR INDICATOR	8J-22
GEAR	19-15
GEAR-PINION/RING	3-47, 3-75
GEARSHIFT CABLE	21-112, 21-226
GENERATOR DECOUPLER PULLEY	8F-26
GENERATOR	8F-25
GLASS AJAR INDICATOR	8J-23
GLASS PANEL SEAL	23-103
GLASS PANEL	23-103
GLASS RUN CHANNEL	23-21, 23-30
GLASS-OUTSIDE REARVIEW MIRROR	23-54
GLOVE BOX LATCH STRIKER	23-60
GLOVE BOX LATCH	23-60
GLOVE BOX	23-60
GLOW PLUG MODULE	8I-12
GLOW PLUG	8I-10
GRILLE OPENING REINFORCEMENT	23-50
GRILLE	23-49
HALF SHAFT	3-10
HANDS FREE MODULE	8T-1
HAZARD SWITCH	8L-32
HCU (HYDRAULIC CONTROL UNIT)	5-44
HEADLAMP HIGH BEAM RELAY	8L-34
HEADLAMP LEVELING MOTOR	8L-36
HEADLAMP LEVELING SWITCH	8L-38
HEADLAMP LOW BEAM RELAY	8L-40
HEADLAMP UNIT	8L-40
HEADLINER	23-73
HEADREST SLEEVE	23-78
HEADREST	23-78
HEAT SHIELDS	11-9
HEATED GLASS	8G-1, 8G-5
HEATED MIRRORS	8G-7
HEATED SEAT ELEMENT	8G-12
HEATED SEAT MODULE	8E-28
HEATED SEAT SENSOR	8G-13
HEATED SEAT SYSTEM	8G-8
HEATER CORE	24-63
HEATING & AIR CONDITIONING	24-1
HIGH BEAM INDICATOR	8J-24
HINGE	23-15, 23-21, 23-31, 23-44
HOISTING	0-23
HOLDING CLUTCHES	21-115, 21-228
HOOD AJAR SWITCH	8Q-8
HOOD	23-15
HORN RELAY	8H-2
HORN SWITCH	8H-3
HORN SYSTEM	8H-1
HORN	8H-2
HOSE CLAMPS	7-31
HOSES	19-32
HUB / BEARING	2-12
HVAC HOUSING	24-39
HYDRAULIC LIFTERS	9-32, 9-207
IDLE AIR CONTROL MOTOR	14-30
IDLER SHAFT	9-157
IGNITION COIL CAPACITOR	8I-20
IGNITION COIL	8I-13
IGNITION CONTROL	8I-1
IGNITION SWITCH	19-9
ILLUMINATION LAMP	8L-86
IMPACT SENSOR	8O-28
INPUT CLUTCH ASSEMBLY	21-116, 21-230
INPUT SPEED SENSOR	21-132, 21-240
INSTRUMENT CLUSTER	8J-2
INSTRUMENT PANEL ANTENNA CABLE	8A-11
INSTRUMENT PANEL ASSEMBLY	23-61
INSTRUMENT PANEL CENTER BEZEL	23-67
INSTRUMENT PANEL DRIVER SIDE BEZELS	23-66
INSTRUMENT PANEL END CAP	23-66
INSTRUMENT PANEL PASSENGER SIDE BEZEL	23-67
INSTRUMENT PANEL TOP COVER	23-65
INTAKE AIR TEMPERATURE SENSOR	14-31, 14-90
INTAKE MANIFOLD	9-58, 9-242
INTAKE/EXHAUST VALVES & SEATS	9-30, 9-98, 9-110
INTERMEDIATE SHAFT	19-12
INTERNAL VACUUM PUMP	9-228
INTERNATIONAL SYMBOLS	0-1
INTERNATIONAL SYMBOLS	Intro.-4
IOD FUSE	8W-97-3
JOINT/BOOT-C/V INNER	3-16
JOINT/BOOT-C/V OUTER	3-13
JOUNCE BUMPER	2-23
JUMP STARTING	0-23
JUNCTION BLOCK	8W-97-4
KEY CYLINDER	19-11
KEY-IN IGNITION SWITCH	19-11
KNEE BLOCKER	23-68
KNOCK SENSOR	8I-15
KNUCKLE	2-12
LAMP BAR SWITCH	8L-51
LAMP BAR	8L-47
LAMP-HIGH MOUNTED STOP	8L-22
LAMPS/LIGHTING - EXTERIOR	8L-3
LAMPS/LIGHTING - INTERIOR	8L-73
LATCH - ACCESS PANEL	23-41
LATCH RELEASE CABLE	23-16
LATCH RELEASE HANDLE	23-17
LATCH STRIKER	23-22, 23-32, 23-41
LATCH	23-15, 23-21, 23-31, 23-40
LEFT MOUNT	9-231
LEFT POWER SEAT SWITCH	8N-16
LEVER	5-35
LICENSE PLATE LAMP	8L-45
LIGHT BAR LAMP INDICATOR	8J-24
LINE PRESSURE (LP) SENSOR	21-241
LINKAGE	6-9
LINKAGE	19-23
LIQUID LINE	24-64
LOCK CYLINDER	23-22, 23-42
LOW FUEL INDICATOR	8J-25
LOW OIL PRESSURE INDICATOR	8J-26
LOW/REVERSE CLUTCH	21-243
LOWER BALL JOINT	2-13
LOWER CONTROL ARM	2-14, 2-26
LUBRICATION	9-51, 9-134
LUGGAGE RACK	23-52
MAINTENANCE SCHEDULES	0-6
MALFUNCTION INDICATOR LAMP (MIL)	8J-27
MANIFOLD - EXHAUST	9-148
MANIFOLD - INTAKE	9-146
MANUAL SEAT RISER	23-90
MANUAL TRANSMISSION - NSG370	21-1
MAP SENSOR	14-33
MARKER LAMP	8L-53
MASS AIR FLOW SENSOR	14-90
MASTER CYLINDER	5-28
MASTER CYLINDER	6-10
METRIC SYSTEM	Intro.-4
MICRO-RELAY	8W-97-14
MODE DOOR ACTUATOR	24-31
MODE DOOR	24-42
MODULE/FRAME ASSEMBLY	23-106
MOLDING - SILL	23-56
MOTOR/MODULE - SUNROOF	8N-24
MUFFLER	11-8
MULTI-FUNCTION SWITCH	8L-55
NAVIGATION/TELECOMMUNICATION	8T-1
OCCUPANT CLASSIFICATION MODULE	8O-32
ODOMETER	8J-28
OIL COOLER	9-241
OIL FILTER	9-52, 9-140
OIL JET	9-239
OIL PAN	9-52, 9-140, 9-233
OIL PRESSURE RELIEF VALVE	9-234
OIL PRESSURE SENDING UNIT	9-235
OIL PRESSURE SENSOR/SWITCH	9-53
OIL PUMP FRONT SEAL	21-255
OIL PUMP SEAL	21-138
OIL PUMP	9-53, 9-237
OIL PUMP	21-133, 21-247
OIL SEPARATOR	9-240
OIL	9-51, 9-139, 9-233
OPENING DIMENSIONS	23-220
OPENING TRIM LACE	23-105
ORVR	25-14
OUTPUT SPEED SENSOR	21-135, 21-255
OVERDRIVE OFF INDICATOR	8J-29
OVERDRIVE SWITCH	21-136, 21-256
OVERHEAD CONSOLE	8M-1
OXYGEN SENSOR	14-35
PAINT CODE	23-76
PAINT TOUCH-UP	23-77
PAINT	23-76
PARK BRAKE SWITCH	8L-62
PARK INTERLOCK CABLE	21-136, 21-256
PARK LAMP RELAY	8L-64
PARK/TURN SIGNAL LAMP	8L-65
PARKING BRAKE	5-32
PARTS & LUBRICANT RECOMMENDATION	0-1
PASSENGER AIRBAG ON/OFF INDICATOR	8O-41
PASSENGER AIRBAG	8O-36
PASSENGER HEATED SEAT SWITCH	8G-11
PCV VALVE	25-17
PEDAL	5-22
PILOT BEARING	6-8
PISTON & CONNECTING ROD	9-44, 9-123, 9-222
PISTON RINGS	9-46, 9-128
PLANETARY GEARTRAIN	21-138, 21-258
PLUMBING	24-47
POSITION SENSOR	21-310, 21-344, 21-379
POWER BRAKE BOOSTER	5-23
POWER DISTRIBUTION CENTER	8W-97-6
POWER DISTRIBUTION	8W-97-1
POWER FOLDAWAY MIRROR SWITCH - EXPORT	8N-12
POWER LOCKS	8N-1
POWER MIRROR SWITCH	8N-13
POWER MIRRORS	8N-10
POWER OUTLET	8W-97-11
POWER SEAT TRACK	8N-20
POWER SEATS	8N-15
POWER STEERING PRESSURE SWITCH	19-38
POWER TOP - SUNROOF	8N-22
POWER WINDOWS	8N-29
POWERTRAIN CONTROL MODULE	8E-16
PROPELLER SHAFT	3-1
PULLEY	19-39
PUMP - ENGINE OIL	9-144
PUMP	19-25
PUMP-NATURAL VAC LEAK DETECTION	25-15
QUARTER GLASS INTEGRAL ANTENNA	8A-13
QUARTER TRIM PANEL	23-73
QUARTER WINDOW	23-97
QUICK CONNECT FITTING	14-7
RADIATOR - FAN - VISCOUS	7-38
RADIATOR CROSSMEMBER	23-54
RADIATOR FAN - ELECTRIC	7-36
RADIATOR PRESSURE CAP	7-35
RADIATOR	7-33
RADIO NOISE SUPPRESSION COMPONENTS	8A-17
RADIO	8A-14
REAR AXLE - 8 1/4	3-52
REAR CROSSMEMBER	13-7
REAR DOOR INNER BELT WEATHERSTRIP	23-114
REAR DOOR OUTER BELT MOLDING	23-113
REAR DOOR SCUFF PLATE	23-74
REAR FASCIA - RAIN DIVERTER	13-3
REAR FASCIA - STEP PAD	13-3
REAR FASCIA SUPPORT	13-2
REAR FASCIA	13-2
REAR FLOOR HEAT DUCT	24-44
REAR FOG LAMP INDICATOR	8J-30
REAR LAMP UNIT	8L-66
REAR MOUNT	9-49, 9-133
REAR OUTPUT SHAFT SEAL	21-312, 21-381
REAR SEAT BACK LATCH STRIKER	23-96
REAR TOW HOOK	13-8
REAR VIEW MIRROR	23-75
REAR WHEEL OPENING FLARE MOLDINGS	23-53
REAR WHEEL SPEED SENSOR	5-44
REAR WHEELHOUSE SPLASH SHIELD	23-52
REAR WINDOW DEFOGGER RELAY	8G-3
REAR WINDOW DEFOGGER SWITCH	8G-4
REAR WIPER MOTOR	8R-14
RECEIVER-SATELLITE	8A-20
RECIRCULATION DOOR ACTUATOR	24-32
RECIRCULATION DOOR	24-45
REFRIGERANT OIL	24-65
REFRIGERANT	24-65
RELAY	8W-97-13
REMOTE KEYLESS ENTRY MODULE	8N-6
REMOTE KEYLESS ENTRY TRANSMITTER	8N-7
REMOTE SWITCHES	8A-20

Description	Group-Page
REPEATER LAMP	8L-67
RESERVOIR	19-40
RESTRAINTS	8O-2
RIGHT MOUNT	9-232
RIGHT POWER SEAT SWITCH	8N-18
ROCK RAIL	23-55
ROCKER ARM	9-101, 9-112
ROCKER ARMS	9-33, 9-206
ROTORS	5-19
SEAL-AXLE SHAFT	3-40, 3-67
SEAL-PINION	3-42, 3-69
SEALER LOCATIONS	23-196
SEALS - VALVE GUIDE	9-101, 9-113
SEAT - FRONT	23-79
SEAT - REAR	23-92
SEAT BACK - FRONT	23-81
SEAT BACK - REAR	23-93
SEAT BACK COVER - FRONT	23-83
SEAT BACK COVER - REAR	23-95
SEAT BACK CUSHION - FRONT	23-85
SEAT BACK CUSHION - REAR	23-95
SEAT BACK FRAME - REAR	23-96
SEAT BACK RECLINER - FRONT	23-82
SEAT BELT & RETRACTOR	8O-46
SEAT BELT BUCKLE	8O-43
SEAT BELT SWITCH	8O-52
SEAT BELT TENSIONER	8O-52
SEAT BELT TURNING LOOP ADJUSTER	8O-53
SEAT CUSHION - FRONT	23-86
SEAT CUSHION - REAR	23-96
SEAT CUSHION COVER - FRONT	23-88
SEAT TRACK	23-91
SEAT WEIGHT SENSOR	8O-54
SEATBELT INDICATOR	8J-31
SECURITY INDICATOR	8J-32
SENSOR	22-15
SENTRY KEY REMOTE ENTRY MODULE	8Q-13
SERVICE PORT VALVE CORE	24-66
SERVO	8P-4
SHAFT-AXLE	3-40, 3-66
SHAFT-PROPELLER FRONT	3-5
SHAFT-PROPELLER REAR	3-6
SHIFT BEZEL	23-72
SHIFT INDICATOR (TRANSFER CASE)	8J-33
SHIFT LEVER	21-314, 21-345, 21-382
SHIFT MECHANISM	21-139, 21-262
SHOCK	2-15, 2-22
SHOES	5-36
SIDE RAIL WEATHERSTRIP/RETAINER	23-113
SIDE STEP	23-55
SIDE VIEW MIRROR	23-54
SIDEVIEW MIRROR	8N-14
SIREN	8Q-16
SOLENOID SWITCH VALVE	21-264
SOLENOID	21-140
SOLENOID/PRESSURE SWITCH ASSY	21-141
SPARE TIRE CARRIER	22-10
SPARK PLUG	8I-16
SPEAKER	8A-22
SPEED CONTROL	8P-1
SPEEDOMETER	8J-36
SPRING	2-17, 2-23
SPRINGS - VALVE	9-113
SPRINGS VALVE	9-101
STABILIZER BAR	2-18, 2-24
STABILIZER LINK	2-18
STABILIZER WEDGE/INSERT	23-43
STARTER MOTOR RELAY	8F-41
STARTER MOTOR	8F-39
STARTING SYSTEM	8F-32
STEERING WHEEL	19-14
STEERING	19-1
STRUCTURAL COLLAR	9-48
STRUCTURAL COVER	9-131
SUCTION LINE	24-67
SUN VISOR SUPPORT	23-74
SUN VISOR	23-74
SUNROOF	23-100
SUNSHADE	23-104
SUPPORT CYLINDER	23-16
SUPPORT PLATE	5-31
SUSPENSION	2-1
SWING GATE BELTLINE WEATHERSTRIP	23-112
SWING GATE OPENING WEATHERSTRIP	23-112
SWING GATE	23-45
SWITCH - OIL PRESSURE	9-143
SWITCH - SUNROOF	8N-27
TACHOMETER	8J-37
TAILGATE CYLINDER LOCK SWITCH	8N-8
TERMINAL	8W-01-14
THERMOSTAT HOUSING	7-40
THROTTLE BODY	14-38
THROTTLE CONTROL CABLE	14-39
THROTTLE POSITION SENSOR	14-41
TIE ROD END	19-23
TIMING BELT / CHAIN COVER(S)	9-155, 9-247
TIMING BELT AND SPROCKET(S)	9-61
TIMING BELT COVER(S)	9-60
TIMING BELT IDLER PULLEY	9-249
TIMING BELT TENSIONER & PULLEY	9-65
TIMING BELT/CHAIN AND SPROCKET(S)	9-157, 9-251
TIMING BELT/CHAIN TENSIONER & PULLEY	9-253
TIRE PRESSURE MONITOR INDICATOR	8J-38
TIRE PRESSURE MONITORING SYSTEM	22-13
TIRES	22-6
TIRES/WHEELS	22-1
TORQUE CONVERTER	21-143, 21-264
TORQUE REFERENCES	Intro.-6
TOWING	0-24
TRAILER HITCH	13-8
TRAILER TOW CONNECTOR	8L-68
TRAILER TOW RELAY	8L-69
TRAILER TOW WIRING	8L-71
TRANS COOLER	7-46
TRANS TEMP INDICATOR	8J-38
TRANSFER CASE - NV231	21-282
TRANSFER CASE - NV241 GENII	21-315
TRANSFER CASE - NV242	21-347
TRANSFER CASE SKID PLATE	13-7
TRANSMISSION CONTROL MODULE	8E-21
TRANSMISSION CONTROL RELAY	21-148, 21-270
TRANSMISSION RANGE SENSOR	21-149, 21-270
TRANSMISSION SOLENOID/TRS ASSEMBLY	21-271
TRANSMISSION TEMPERATURE SENSOR	21-151, 21-272
TRANSMISSION	7-45
TRANSPONDER KEY	8Q-18
TRANSPONDER	22-20
TRIM PANEL	23-23, 23-32, 23-40
TROUGH GUIDE ASSEMBLY	23-104
TROUGH	23-104
TURBOCHARGER SYSTEM	11-9
TURBOCHARGER	11-11
TURN SIGNAL CANCEL CAM	8L-72
TURN SIGNAL INDICATOR	8J-39
UK SECURITY SYSTEM MODULE	8Q-11
UNIVERSAL JOINT-SINGLE CARDAN	3-8
UNIVERSAL TRANSMITTER	8M-12
UPPER BALL JOINT	2-24
UPPER CONTROL ARM	2-18, 2-25
VACUUM CHECK VALVE	24-34
VACUUM LINES	25-20
VACUUM RESERVOIR	8P-6
VALVE BODY	21-151, 21-273
VALVE SPRINGS	9-31
VALVE TIMING	9-149, 9-242
VANITY LAMP	8L-88
VAPOR CANISTER	25-20
VEHICLE CERTIFICATION LABEL	Intro.-9
VEHICLE EMISSION CONTROL INFORMATION (VECI) LABEL	Intro.-8
VEHICLE IDENTIFICATION NUMBER	Intro.-8
VEHICLE THEFT SECURITY	8Q-1
VIBRATION DAMPER	9-48, 9-130, 9-228
VOLTAGE REGULATOR	8F-31
WAIT-TO-START INDICATOR	8J-40
WASHER FLUID INDICATOR	8J-41
WASHER FLUID LEVEL SWITCH	8R-16
WASHER HOSES/TUBES	8R-18
WASHER NOZZLE	8R-19
WASHER PUMP/MOTOR	8R-22
WASHER RESERVOIR	8R-24
WATER IN FUEL SENSOR	14-56
WATER PUMP	7-40
WATER-IN-FUEL INDICATOR	8J-41
WATERDAM	23-23, 23-33
WELD AND STRUCTURAL ADHESIVE LOCATIONS	23-118
WHEEL ALIGNMENT	2-3
WHEELS	22-10
WIND DEFLECTOR	23-105
WINDOW MOTOR	8N-30
WINDOW REGULATOR - MANUAL	23-24, 23-33
WINDOW REGULATOR - POWER	23-25, 23-34
WINDOW SWITCH	8N-30
WINDSHIELD A-PILLAR WEATHERSTRIP/ RETAINER	23-114
WINDSHIELD	23-98
WIPER ARM PARK RAMP	8R-30
WIPER ARM	8R-26
WIPER BLADE	8R-30
WIPER HIGH/LOW RELAY	8R-33
WIPER MODULE	8R-34
WIPER ON/OFF RELAY	8R-36
WIPERS/WASHERS	8R-2
WIRE HARNESS	23-108
WIRING DIAGRAM INFORMATION	8W-01-1

SERVICE MANUAL COMMENTS

What errors(s) have you found?

_____

_____

_____

_____

In order for us to assist you, please include as much details as possible when reporting an error

Comments / Suggestions

_____

_____

_____

_____

☐ **Dealership Technician**
Dealer Code: _____

Retail Customer ☐

Manual Title, Year, Number and Page: _____

_____

Your Name: _____

Address: _____

_____

_____

All comments become property of DaimlerChrysler and may be used without compensation.

(FOLD HERE)

NO POSTAGE
NECESSARY
IF MAILED
IN THE
UNITED
STATES

BUSINESS REPLY MAIL

FIRST CLASS MAIL PERMIT NO. 124 CENTER LINE, MI

POSTAGE WILL BE PAID BY ADDRESSEE

DaimlerChrysler Corporation
Dealer Technical Operations
800 Chrysler Drive
CIMS 486-02-76
Auburn Hills, MI 48326-2757

(FOLD HERE)